TEXAS TRANSPORTATION COMMISSION

ALL Counties

MINUTE ORDER

ALL Districts

The Texas Transportation Commission (commission) finds it necessary to adopt amendments to §25.21, §25.23, and §25.25, relating to procedures for establishing speed zones, to be codified under Title 43, Texas Administrative Code, Part 1.

The preamble and the adopted amendments, attached to this minute order as Exhibits A and B, are incorporated by reference as though set forth at length verbatim in this minute order.

IT IS THEREFORE ORDERED by the commission that the amendments to §25.21, §25.23, and §25.25 are adopted and are authorized for filing with the Office of the Secretary of State.

The executive director is directed to take the necessary steps to implement the actions as ordered in this minute order, pursuant to the requirements of the Administrative Procedure Act, Government Code, Chapter 2001.

Submitted and reviewed by:

Carlos A. López, P.E.

Director, Traffic Operations Division

Recommended by:

M. W. Behrens

Executive Director

110432 FEB 23 06

Minute Number | Date Passed

Adoption Preamble

The Texas Department of Transportation (department) adopts amendments to §25.21, §25.23, and §25.25 concerning procedures for establishing speed zones. The amendments to §25.21, §25.23, and §25.25 are adopted without changes to the proposed text as published in the December 2, 2005 issue of the *Texas Register* (30 TexReg 8044) and will not be republished.

EXPLANATION OF ADOPTED AMENDMENTS

House Bill 2257, 79th Legislature, Regular Session, 2005, expands the number of counties that are eligible for a maximum 75 mile per hour daytime speed limit as established by the Texas Transportation Commission (commission). House Bill 2257 also authorizes the commission to establish a maximum speed limit of 80 miles per hour on Interstate Highway 10 and Interstate Highway 20 in certain counties.

Section 25.21, Introduction, implements the legislative changes by adding the counties that now qualify for the 75 mile per hour speed limit. The amendment also states the counties eligible for the 80 mile per hour speed limit as authorized by House Bill 2257. Amendments to this section also note that the maximum speed allowed on a portion of the Trans-Texas Corridor is 85 miles per hour as authorized under Transportation Code, §545.3531.

Various changes to §25.23, Speed Zone Studies, allow a four hour observation period for a speed study if performed with a traffic counter that classifies vehicles by type. These changes reflect current agency practice and are non-substantive in nature.

Section 25.23(c)(5), clarifies that when a study indicates that the 85th percentile speed is at or below 50 miles per hour, the resulting school zone speed limit should not be set more than 15 miles per hour below the 85th percentile speed. The current language only states that this requirement applies to 85th percentile speeds of below 50 miles per hour. This is not a significant change and is included only as clarification.

Section 25.25, Application of Advisory Speeds, is amended to allow for the use of manual or electronic ball-bank indicators for use in determining the advisory speed limit for curves and turns. The Procedures for Establishing Speed Zones Manual (procedures manual) includes detailed information on the use of the ball-bank indicator, therefore, all references about how to use the ball-bank indicator have been deleted from the adopted rule. Figures 2, 4, and 5 in §25.25 are deleted. By deleting §25.25(b)(3)-(8), the department is able to update the procedures manual to accommodate the use of new technology.

COMMENTS

No comments on the proposed amendments were received.

STATUTORY AUTHORITY

The amendments are adopted under Transportation Code, §201.101, which provides the commission with the authority to establish rules for the conduct of the work of the department.

CROSS REFERENCE TO STATUTE

Transportation Code, §545.353, and §545.3531.

SUBCHAPTER B. PROCEDURES FOR ESTABLISHING SPEED ZONES

§25.21. Introduction.

(a) Overview.

(1) Purpose. This subchapter provides the information and procedures necessary for establishing speed zones and advisory speeds on the state highway system.

(2) Applicability. This subchapter is intended for use by entities with authority to set speed zones. These procedures shall be followed by the department, cities, and commanding officers of the U.S. military reservations when establishing speed zones on the state highway system. Regional tollway and regional mobility authorities shall follow these procedures when establishing speed zones.

(3) Responsibilities.

(A) The department will:

(i) conduct engineering and traffic studies associated with the establishment of speed zones and advisory speeds;

(ii) request cities to pass ordinances or resolutions establishing speed zones when necessary; and

(iii) erect and maintain necessary speed limit and advisory speed signs and notify local enforcement authorities upon installation of the signs.

1 (B) Cities will:

2 (i) request that the district conduct engineering and
3 traffic studies associated with the establishment of speed zones
4 on the state highway system within the city limits or conduct
5 the studies themselves; and

6 (ii) upon approval by the department, prepare and
7 pass city ordinances or resolutions establishing speed zones.

8 (C) A commissioners court of a county by resolution may
9 request, through the district office, that the commission
10 determine and declare a reasonable and safe prima facie speed
11 limit lower than that established by Transportation Code,
12 §545.352, on any part of a farm-to-market or a ranch-to-market
13 road that is without improved shoulders located in that county.

14 (b) Background.

15 (1) Prima facie concept. In Texas, all speed limits are
16 considered "prima facie" limits. Prima facie limits are those
17 limits which on the face of it, are reasonable and prudent under
18 normal conditions.

19 (2) Authority to set speed zones.

20 (A) Transportation Code, §545.353, authorizes the
21 commission to alter maximum speed limits on highway routes both
22 within and outside of cities, provided the Procedures for
23 Establishing Speed Zones are followed.

(B) Transportation Code, §545.353, subsections (h) and (i), address the commission's authority to establish a daytime speed limit of 75 or 80 miles [~~mile~~] per hour on a portion of the state highway system.

(i) The commission may establish [~~such~~] a 75 mile per hour speed limit in counties with a population density of less than 15 [~~10~~] persons per square mile. Counties that are currently eligible for this higher maximum daytime speed limit are Andrews, Archer, Armstrong, Bailey, Baylor, Blanco, Borden, Brewster, Briscoe, Brooks, Callahan, Carson, Castro, Childress, Clay, Cochran, Coke, Coleman, Collingsworth, Concho, Cottle, Crane, Crockett, Crosby, Culberson, Dallam, Deaf Smith, Dickens, Dimmit, Donley, Duval, Edwards, Fisher, Floyd, Foard, Frio, Gaines, Garza, Glasscock, Goliad, Hall, Hamilton, Hansford, Hardeman, Hartley, Haskell, Hemphill, Hudspeth, Irion, Jack, Jeff Davis, Jim Hogg, Kenedy, Kent, Kimble, King, Kinney, Knox, Lamb, La Salle, Leon, Lipscomb, Live Oak, Loving, Lynn, Martin, Mason, McCullough, McMullen, Menard, Mills, Mitchell, Motley, Ochiltree, Oldham, Parmer, Pecos, Presidio, Reagan, Real, Red River, Reeves, Refugio, Roberts, Runnels, San Saba, Schleicher, Shackelford, Sherman, Stephens, Sterling, Stonewall, Sutton, Swisher, Terrell, Terry, Throckmorton, Upton, Val Verde, Ward, Wheeler, Winkler, Yoakum, Zapata, and Zavala.

(ii) The department will reevaluate which counties are eligible for [~~such~~] a 75 mile per hour speed limit upon the release of each decennial federal census of the population.

(iii) The commission may establish a speed limit of 80 miles per hour for daytime on parts of Interstate Highway 10 and of Interstate Highway 20 in Crockett, Culberson, Hudspeth, Jeff Davis, Kerr, Kimble, Pecos, Reeves, Sutton, or Ward counties.

(iv) [~~(iii)~~] In order to establish a 75 or 80 mile per hour daytime speed limit in an eligible county, the commission must determine that a 75 or 80 mile per hour speed limit is safe and reasonable.

(v) [~~(iv)~~] A 75 or 80 mile per hour speed limit established under this section does not apply to trucks (other than light trucks and light trucks pulling a trailer), truck tractors, trailers, and semitrailers.

(C) The altering of the general statewide maximum speed limits to fit existing traffic and physical conditions of the highway constitutes the basic principle of speed zoning.

(D) Transportation Code, §545.355 and §545.356, give counties and cities the same authority within their respective jurisdictions. The law also provides that any speed zone on highway routes in cities established by commission minute order

1 will supersede any conflicting zone set by city ordinance or
2 resolution.
3 (E) Except in very unusual circumstances, the zoning on
4 state highway routes within cities should only be set by city
5 ordinance or resolution based upon the recommendations of the
6 department. The usual practice, even for speed zones
7 established by city ordinance or resolution, is for the
8 department to make the necessary speed studies and recommend the
9 most appropriate zoning to the city. Cities that have a traffic
10 engineering staff may also make speed studies on state-
11 maintained highways and recommend proper zoning. The procedure
12 is permissible so long as the department is afforded an
13 opportunity to review and approve the recommended city zoning.
14 (F) County commissioner courts and governing bodies of
15 incorporated cities and villages may alter maximum prima facie
16 speed limits on roadways under their jurisdiction in accordance
17 with the provisions of Transportation Code, §545.355 and
18 §545.356, respectively. However, alteration of maximum prima
19 facie speed limits on any designated or marked roadway of the
20 state highway system, even within the corporate limits of a
21 city, typically requires an engineering and traffic
22 investigation in accordance with §25.23 of this subchapter
23 (relating to Speed Zone Studies), and the approval of the

department.

(G) A county that increases the prima facie speed limit on a county road or highway is also required to conduct an engineering and traffic investigation. However, for a county road or highway outside the limits of the right of way of an officially designated or marked highway or road on the state highway system, the county commissioners court may declare a lower speed limit of not less than 30 miles per hour, if the commissioners court determines that the prima facie speed limit on the road or highway is unreasonable or unsafe.

(H) County authority does not extend to any segment of the state highway system; however, the commissioners court of a county, by resolution, may request the commission to determine and declare a reasonable and safe prima facie speed limit that is lower than a speed limit established by Transportation Code, §545.352, on any part of a farm-to-market or ranch-to-market road without improved shoulders located in that county.

(I) The commission shall give consideration to local public opinion and may determine and declare a lower speed limit on any part of the road without an engineering and traffic investigation, but the commission must use sound and generally accepted traffic engineering practices in determining and declaring the lower speed limit. Sound and generally accepted

engineering practices for these FM and RM roadways without improved shoulders are described in §25.23(d) of this subchapter.

(J) This is different from the authority of cities, who may exercise concurrent authority subject only to commission override. In exercising their authority, cities must base any speed zones on engineering and traffic investigations, notwithstanding the type of road or street and whether the state highway system is involved.

(K) The authority of regional tollway authorities, regional mobility authorities, and the Commanding Officer of a United States Military Reservation to alter the speed limits are addressed in Transportation Code, §§370.033, 545.354, and 545.358. These decision making authorities are required to follow the speed zone procedures as adopted by the department when altering speed limits on off-system turnpikes or on-system highways within the confines of a military reservation.

<u>(L) Transportation Code, §545.3531, authorizes the commission to establish a speed limit of not more than 85 miles per hour on the Trans-Texas Corridor.</u>

(3) Guidelines for selecting speed limits. All authorized entities using these procedures should observe the following guidelines when setting speed limits.

(A) Speed limits on all roadways should be set based on spot speed studies and the 85th percentile operating speed (see §25.23 of this subchapter). Legal minimum and maximum speeds should establish the boundaries of the speed limits. If an existing roadway section's posted speed limit is to be raised, the roadway's roadside features should be examined to determine if modifications may be necessary to maintain roadside safety.

(B) It is appropriate for posted speed limits to be based on the 85th percentile speed, even for those sections of roadway that have an inferred design speed lower than the 85th percentile speed. Posting a roadway's speed limit based on its 85th percentile speed is considered good and typical engineering practice. This practice remains valid, even where the inferred design speed is lower than the resulting posted speed limit. In such situations, the posted speed limit would not be considered excessive or unsafe.

(C) Arbitrarily setting lower speed limits at point locations due to a perceived shorter than desirable stopping sight distance is neither effective nor good engineering practice.

(D) If a section of roadway has, or is expected to have, a posted speed in excess of the roadway's inferred design speed and a safety concern exists at the location, then

1 appropriate warning or informational signs should be installed
2 to warn or inform drivers of the condition.
3 (i) Slightly shorter than desirable stopping sight
4 distances do not present an unsafe operating condition because
5 of the conservative assumptions made in establishing desirable
6 stopping sight distances.
7 (ii) Any sign is a roadside object that should be
8 installed only when its need is clearly demonstrated.
9 (E) New or reconstructed roadways and roadway sections
10 should be designed to accommodate operating speeds consistent
11 with the roadway's highest anticipated posted speed limit based
12 on the roadway's initial or ultimate function.
13 (c) Factors affecting safe speed.
14 (1) Introduction. This subsection discusses various
15 factors influencing drivers and their perception of the safe
16 speed at which to operate a vehicle. Because so many variables
17 affect the safe operating speed of vehicles, it is not practical
18 to consider each individually. These factors should be
19 considered as a whole and weighed accordingly.
20 (2) Design and physical factors of the roadway.
21 (A) The design and physical factors of the roadway
22 place a definite limitation on the safe operating speed of
23 vehicles. These factors include:

(i) horizontal and vertical curves;

(ii) hidden driveways and other roadside developments;

(iii) high driveway density;

(iv) rural residential or developed areas; and

(v) lack of striped, improved shoulders.

(B) Speed restrictions, if any, imposed by some curves can be calculated easily and checked by the use of the ball bank indicator, described in §25.25(b) of this subchapter (relating to Curves and Turns). Likewise, the restriction imposed by obstructions to sight distance can be calculated.

(C) The effects of such factors as lane width, condition of surface, type and width of shoulders, frequency of intersections, and roadside development are not so easily measured. As a general rule, especially on tangents, these factors will be measured on the basis of prevailing speeds as determined by speed checks.

(3) The vehicle.

(A) The mechanical condition of vehicles and their characteristics for accelerating, decelerating, stopping, and turning affect safe speeds.

(B) The body roll angle of different makes of cars and year models of the same make also affects the safe operating

speed on curves.

(C) Braking capabilities of different vehicles, such as passenger cars, buses, and various truck-trailer combinations, are obviously different, and it would generally not be practical to post safe speeds for each group.

(D) Normally, the posted speed will be that for the passenger car.

(4) The driver.

(A) The selection of speeds to be posted will be aimed at the ability and performance of the average driver.

(B) Average driver ability is considered in the form of perception - reaction time in the calculation of critical approach speeds to intersections, crosswalks, and locations with limited sight distance and in determining the posting distance for signs.

(5) Traffic.

(A) The presence of other vehicles on the highway, including those which may be entering, crossing, turning off, or parked, affects operating speeds.

(B) The frequency of pedestrians is an important factor. This is especially true at intersections with limited sight distance and at approaches to crosswalks.

(C) The speeds shall be posted for off-peak hour

1 traffic on an average weekday. This will require drivers to
2 adjust their speeds to lower values at times of peak hour
3 traffic at some locations.
4 (6) Weather and visibility.
5 (A) Speeds will normally be selected and posted for
6 good weather conditions and dry pavement. Texas law, however,
7 also provides for the posting of speeds for wet weather
8 conditions.
9 (B) Except in cases where the statewide maximum legal
10 limits are posted, speeds will normally be posted on the basis
11 of daylight speed values determined under good weather
12 conditions. It is permissible, however, for different day and
13 night speeds to be posted for speed zones where it can be shown
14 to be necessary by nighttime speed surveys.
15 (C) When it can be shown that it is required during wet
16 or inclement weather, a wet weather speed zone may be
17 established by commission minute order.
18 (i) The wet weather speed limit should be posted in
19 addition to the regular posted speed zone.
20 (ii) When appropriately signed, this wet weather
21 speed limit will be effective during wet weather at any time
22 during hours of daylight and darkness.
23

§25.23. Speed Zone Studies.

(a) Overview.

(1) Engineering and traffic investigation. This section includes a description of how to conduct an engineering and traffic investigation as the basis for establishing a regulatory speed zone along a roadway. This investigation is commonly called a speed zone study.

(2) Scope of study.

(A) The speed zone study should cover the entire length of a potential zone, even though an analysis of the data may later indicate that the actual limits of the area that requires zoning are less than the limits of the potential zone.

(B) A speed zone study consists of the following principle areas:

(i) determining the 85th percentile speed;

(ii) crash study;

(iii) developing of strip maps;

(iv) speed zone design; and

(v) rechecks of speed zones.

(b) Determining the 85th percentile speed.

(1) General concepts. The maximum speed limits posted as the result of a study should be based primarily on the 85th percentile speed, when adequate speed samples can be secured.

(2) Speed checks for new or reconstructed highways.

(A) Speed checks on new or reconstructed highway sections should not be performed until it is apparent that the traffic speeds have stabilized.

(B) As an interim measure, the statewide maximum speed or the design speed of the roadway may be posted on these sections while utilizing warning signs with advisory speed signs to alert drivers to any hazards. In any case, trial run data should be collected and considered by a traffic engineer before interim speed zones are posted. If the interim speed is lower than the statewide maximum speed, then the interim speed must be established by city ordinance or Texas Transportation Commission minute order. Once the traffic speeds have stabilized, normal speed zone studies should be completed and evaluated by a traffic engineer before the final speeds are posted.

(C) Speed checks should be made as quickly as possible, but it is not necessary to check the speed of every car. In many cases, traffic will be much too heavy for the observer to check all cars.

(3) Operation of speed check stations.

(A) Normal speed checks should:

(i) be made on average week days during off-peak hours under normal traffic conditions;

(ii) be made under favorable weather conditions;

(iii) include only "free floating" vehicles (see subparagraph (B) of this paragraph);

(iv) include a minimum of 125 cars in each direction at each station; and

(v) be discontinued after two hours <u>using a radar or four hours if performed by a traffic counter that classifies vehicles by type</u>, even if 125 cars have not been timed.

(B) The vehicles checked should be only those in which drivers are choosing their own speed ("free floating").

(i) When a line of vehicles moving closely behind each other passes the speed check station, only the speed of the first vehicle should be checked, since the other drivers may not be choosing their own speed.

(ii) Cars involved in passing or turning maneuvers should not be checked, because they are probably driving at an abnormal rate of speed.

(C) Trucks and buses should be recorded separately and should not be included as part of the 125-car total.

(4) Location of speed check stations.

(A) A complete picture of speeds in an area can only be obtained through the proper location of speed check stations. Ideally, speed checks at an infinite number of locations would

be desirable. However, since this is not practical, speed check stations must be strategically located to show all the important changes in prevailing speeds.

(B) In urban areas and on approaches to cities, speed check stations:

(i) should generally be located at intervals of 0.25 mile or less if necessary to insure an accurate picture of the speed pattern;

(ii) should be located midway between signals or 0.2 miles from any signal, whichever is less, to ensure an accurate representation of speed patterns;

(iii) should take into account the locality and the uniformity of physical and traffic conditions;

(iv) may be determined by trial runs through the area if volumes are too low or if a recheck of speeds is all that is needed; and

(v) should be checked midway between interchanges on the main lanes of expressways and freeways.

(C) In rural areas, speed check stations:

(i) may be at intervals greater than 0.25 mile, as long as the general speed pattern is followed;

(ii) may only be necessary at each end and the middle point if the characteristics of the roadway are consistent

1 throughout the entire section; and

2 (iii) may be determined by trial runs through the
3 area if the characteristics of the roadway are consistent
4 throughout the entire section and a speed check in that section
5 indicates that 125 vehicles cannot be checked in the two hours
6 using a radar or four hours if performed by a traffic counter
7 that classifies vehicles by type.

8 (5) Measuring speeds.

9 (A) Radar speed meters which operate on the radar
10 principle are normally used for making speed checks. These
11 devices operate from the power of an automobile battery and give
12 direct readings of vehicle speeds in miles per hour which are
13 accurate to within 2 miles per hour.

14 (B) New technologies may be used in determining
15 vehicular speeds for use in calculating 85th percentile speed if
16 the measured speeds are accurate to within 2 miles per hour and
17 the gap between vehicles is 3 seconds or greater. Examples of
18 new technologies are counter-classifiers with the capability of
19 classifying vehicles, determining vehicular speeds, and
20 differentiating the gap between vehicles. These devices may
21 include video imaging, tube counters, magnetic counters,
22 inductive counters, etc.

23 (c) Schools.

(1) A regular speed zone must not change within the limits of a school speed zone since posting of a regular speed zone sign at the point of change would prematurely terminate the school speed zone. This is due to the fact that speed limits remain fixed until a revised limit is encountered.

(2) Speed checks provide a sound basis for selecting the proper speed limits for school zones. While it is not common practice to set speed limits significantly lower than the 85th percentile speed for regulatory speed zones, exceptions to this practice are often found at school zones.

(3) Factual studies, reason, and sound engineering judgment should govern the final decision on the maximum deviation from the 85th percentile speed which will provide a reasonable and prudent speed limit.

(4) It is not advisable to set a school speed limit above 35 miles per hour in either rural or urban areas. Lower school speed limits should be considered when the 85th percentile speed is below 50 miles per hour.

(5) When the results of a speed study indicate an 85th percentile speed <u>at or</u> below 50 miles per hour, the reduced school speed limit should not be more than 15 miles per hour below the 85th percentile speed or normal posted speed limits. If the 85th percentile speed is 55 miles per hour, the reduced

1 school speed limit should be 20 miles per hour below the 85th
2 percentile speed. Any roadway with an 85th percentile speed
3 greater than 55 miles per hour requires a buffer zone to
4 transition down to a 35 mile per hour speed limit.
5 (6) Operating School Buffer Zones With School Zones.
6 (A) Establishing buffer zones. In some cases, it may
7 be appropriate to operate the buffer zone during the same time
8 periods that the school speed zone operates. This will allow
9 motorists to travel at the higher posted speeds through both
10 zones when the slower speeds are not necessary. An example of
11 this would be highway with a regular posted speed limit of 70
12 mph and a posted school zone speed limit of 35 mph. It would be
13 appropriate to have a school transition speed zone of 55 mph
14 that flashes with the 35 mph school zone on either side. This
15 design makes for better public relations because people are not
16 encouraged to violate or disrespect the law when driving through
17 permanently fixed transition zones that are in affect 24 hours a
18 day. Other situations may not lend themselves to such
19 transitions zones, and should be left up to engineering
20 judgment.
21 (B) Sign design.
22 (i) The basic sign design for a school transition
23 speed limit shall be the same as that used for a regular school

1 zone speed limit sign.

2 (ii) Where the department is responsible for signing
3 school zone speeds and school transition speed zones, the
4 "School Speed Limit XX When Flashing" signs shall be used.

5 (d) Speed zone design.

6 (1) Zone length.

7 (A) The length of any section of zone set for a
8 particular speed should be as long as possible and still be
9 consistent with the 85th percentile speeds. These zone lengths
10 should be shown on the strip map in miles to three decimal
11 places. Where graduated zones on the approach to the city are
12 at locations where speeds fluctuate, the speed zone should
13 generally be 0.2 mile or more.

14 (B) School zones are the exception to this rule and may
15 be as short as reasonable in urban areas, depending on approach
16 speeds.

17 (i) School zones in urban areas where speeds are 30
18 miles per hour or less may have school zones as short as 200 to
19 300 feet.

20 (ii) Where speeds exceed 40 miles per hour, the
21 minimum school zone length should be 1,000 feet to allow for
22 normal deceleration.

23 (2) Transitions.

1 (A) The change in speed between two adjacent zones
2 should not normally be greater than 15 miles per hour, because
3 the change in speed would be too abrupt for driver observance.
4 (B) If adjacent 85th percentile speeds show an abrupt
5 change of more than 15 miles per hour, a transition zone of
6 approximately 0.2 mile or more in length should be used.
7 (3) Urban areas. Texas law states that the maximum speed
8 limit through an urban district is 30 miles per hour, unless
9 zoned otherwise by proper authority. A reasonable and prudent
10 speed limit should be determined and negotiated with the city
11 and set by city ordinance or resolution or by commission minute
12 order. A section of highway in this category should be speed
13 zoned by commission minute order only if all negotiations with
14 the city have proved unsuccessful.
15 (4) Directional differences.
16 (A) The 85th percentile speeds may differ considerably
17 by direction at some locations. Such conditions are usually
18 caused by relatively heavy development on one side of the road.
19 Next to the development, motorists will tend to drive slower
20 because of interference from traffic to and from the
21 development.
22 (B) On divided highways, the zone speeds should conform
23 to the 85th percentile speed even though this may require zoning

1 for different speeds in opposite directions.

2 (C) On undivided roadways, the zones in opposite

3 directions should be the same for enforcement purposes.

4 (5) Variation from 85th percentile.

5 (A) The posted speed selected is the nearest value

6 ending in 5 or 0. The final speed limit may be lowered or

7 raised by as much as 5 miles per hour from the 85th percentile

8 speed or trial-run speed (performed if 125 cars cannot be

9 checked during the two <u>or four</u> hour speed check) based on the

10 professional judgment of the supervising engineer. Only under

11 special conditions would the zone speed vary further from the

12 85th percentile. Explanations of such conditions follow.

13 (i) Different results at adjacent speed check

14 stations. If the 85th percentile speeds for adjacent speed

15 check stations are approximately the same, they may be averaged

16 to determine the zone speed. Any 85th percentile speed should

17 not be included in such averages if it varies more than 7 miles

18 per hour from the speed derived from the average.

19 (ii) Crash rate greater than average. On a section

20 of highway having a crash rate greater than the statewide

21 average crash rate for the same type of roadway section, the

22 zone speed may be as much as 7 miles per hour lower than the

23 85th percentile speed. This should be considered more as an

exception than as a rule, and should be done only when enforcement agencies will assure a degree of enforcement that will make the speed zone effective.

(iii) Light traffic volumes. At locations where traffic volumes are light and 125 cars cannot be checked in the two or four hours that the speed check station is operated, the 85th percentile speed may not be reliable. Trial runs need to be made and documented in the study.

(iv) Legislative or congressional action. Notwithstanding the volume of traffic, if legislative or congressional action results in the immediate increase in statewide maximum legal speed limits, then reasonable and prudent speed zones may be established by trial runs and engineering judgment in lieu of other speed check procedures provided in this subchapter. Speed zones established through this process should be rechecked in accordance with the procedure in subsection (e) of this section.

(v) Additional roadway factors. The posted speed limit may be reduced by as much as 10 miles per hour (12 miles per hour for locations with crash rates higher than the statewide average) below the 85th percentile speed or trial-run speed (performed if 125 cars cannot be checked during the two or four hour speed check) based on sound and generally accepted

engineering judgment that includes consideration of the following factors:

(I) narrow roadway pavement widths - 20 feet or less, for example;

(II) horizontal and vertical curves - possible limited sight distance;

(III) hidden driveways and other developments - possible limited sight distance;

(IV) high driveway density - the higher the number of driveways, the higher the potential for encountering entering and turning vehicles;

(V) crash history along the location;

(VI) rural residential or developed areas - higher potential for pedestrian and bicycle traffic; and

(VII) lack of striped, improved shoulders - constricted lateral movement.

(B) Local public opinion may also be considered on farm-to-market and ranch-to-market roads without improved shoulders (Transportation Code, §545.3535(b)).

(C) The final decision on the amount of variation from the 85th percentile speed for a specific roadway should be based on the engineering judgment of the supervising engineer.

(D) Speed limits should not be posted more than 10

1 miles per hour (12 miles per hour for locations with crash rates
2 higher than the statewide average) below the 85th percentile or
3 trial-run speed (performed if 125 cars cannot be checked during
4 the two <u>or four</u> hour speed check) since unreasonably low speed
5 limits have not been shown to be an effective way to control
6 speeding. Allowing too great a variation would risk losing
7 motorist respect for speed limits and traffic control devices.
8 (6) Blanket lowering of maximum speed limits. Blanket
9 lowering of speed limits may be justified to avoid non-
10 compliance with direct requests from the federal government to
11 lower the statewide maximum speed limit.
12 (7) Trial runs.
13 (A) For the trial run, an average passenger vehicle
14 that is representative of most vehicles on the highway and a
15 reasonably competent driver should be selected.
16 (B) After the 85th percentile speeds and zone lengths
17 have been selected, several trial runs should be made through
18 the area in both directions driving at the selected speeds.
19 This should show any irregularities in the zoning which need
20 correction.
21 (8) Location of regulatory speed limit signs.
22 (A) Speed zones are legally described to the nearest
23 thousandth of a mile (5 feet). Regulatory speed limit signs

should be located within approximately 5 feet of the actual reference marker or milepoint defined in the minute order or city ordinance or resolution.

(B) The locations of regulatory speed zones tied to speed changes should be examined carefully to ensure that signs can be erected within the 5 feet variation. If adherence to the 5 feet variation is not possible, the speed zone sign should be placed as close to the actual location defined in the minute order or city ordinance or resolution as practical. For example, if the reference marker or milepoint is located at an intersection, the regulatory speed limit signs should be located in accordance with standard procedures for placement of departure signing.

(e) Rechecks of speed zones.

(1) Introduction.

(A) The basic data on which speed zones are established are subject to change when conditions change, and established speed zones must not be considered permanent.

(B) Physical improvements to the roadway, increased roadside development, and heavy increases in traffic volumes justify a recheck of speeds to determine whether the 85th percentile speed has changed enough to require a change in the zone speeds.

1 (2) Frequency of rechecks.

2 (A) Periodic rechecks of all zones are desirable at
3 intervals of about three to five years in urban areas regardless
4 of roadway improvements, roadside developments, or increases in
5 traffic volumes. Trial runs or rechecks of every third speed
6 check station may be made.

7 (B) Rechecks in rural areas are desirable at intervals
8 of five to ten years. In many instances, trial runs may be
9 sufficient.

10 (C) If the speed checks or trial runs indicate a need
11 for revision of the zone, rechecks of speeds should be made at
12 all speed check stations for that particular section.

13 (f) Environmental speed limits.

14 (1) Existing environmental speed limits. Existing
15 environmental speed limits created at the request of the Texas
16 Commission on Environmental Quality (TCEQ) may be retained on
17 the state highway system until such time as:

18 (A) the TCEQ advises the department in writing that the
19 speed limit is unnecessary; and

20 (B) a speed study performed for the area finds that the
21 existing environmental speed zone is not reflective of the 85th
22 percentile speed as determined by procedures detailed in this
23 subchapter.

(2) New environmental speed limits prohibited. As per Transportation Code, §545.353(j), no new environmental speed limits may be created on the state highway system.

§25.25. Application of Advisory Speeds.

(a) Overview.

(1) Introduction. A discussion of the following types of advisory speeds is included in this section:

(A) curves and turns;

(B) intersections;

(C) narrow and one-lane bridges;

(D) descending grades of six percent or greater;

(E) dips; and

(F) exit ramps.

(2) Advisory speed sign posting.

(A) The W13-1 or SW13-1 ADVISORY SPEED sign may be used in conjunction with any warning sign to indicate the maximum safe speed for passenger cars around a curve or through a hazardous location. It shall not be used in conjunction with any sign other than a warning sign, nor shall it be used alone.

(B) The W13-1 or SW13-1 sign shall always be mounted on the same post and immediately below the warning sign to which it applies.

(i) The W13-1 sign shall be used with warning signs smaller than 36 by 36 inches.

(ii) The SW13-1 sign shall be used with warning signs 36 by 36 inches and larger.

(C) The following Figure shows typical warning and advisory speed signing applications.

Figure: 43 TAC §25.25(a)(2)(C)

Figure : 43 TAC §25.25 (a)(2)(C)

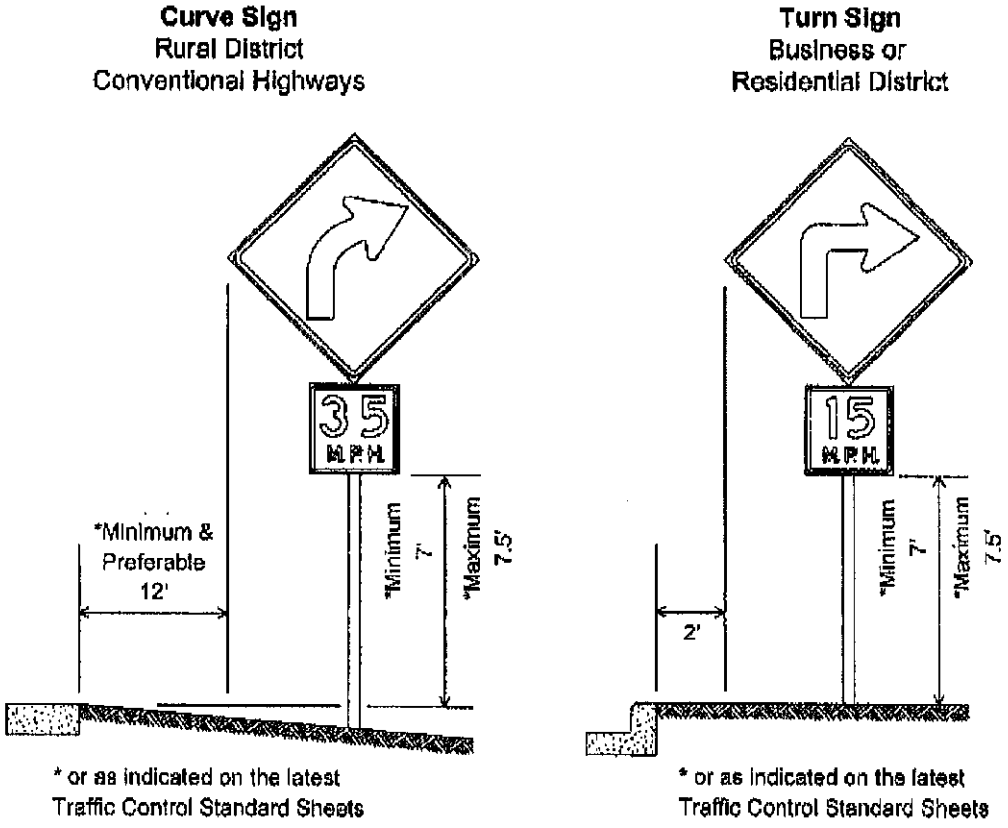

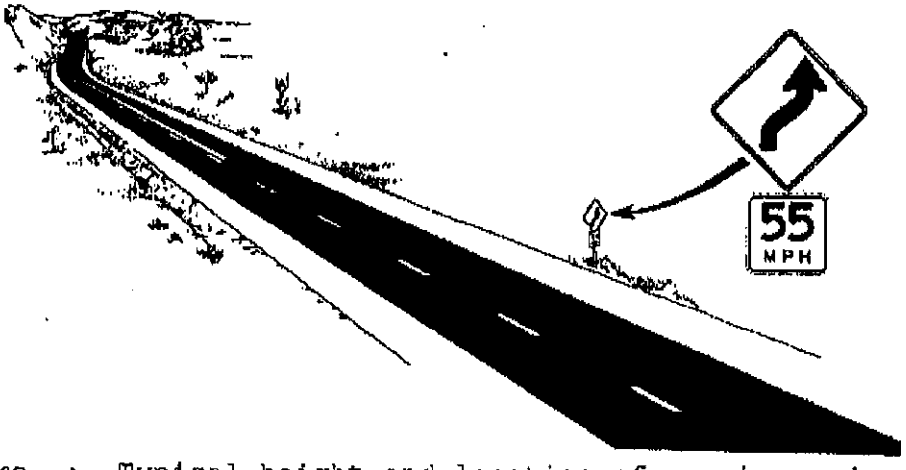

Figure : Typical height and location of warning and advisory speed signs.

1

(b) Curves and turns.

(1) Introduction

(A) Horizontal curves having a safe operating speed of 5 miles per hour or more below the posted maximum speed limit should be signed with advisory speed limits.

(B) Vertical curves may also be signed with advisory speed limits.

(C) The speed to be posted will be based on results obtained from test runs in a vehicle equipped with a [~~the~~] ball-bank indicator, not the calculated value. The ball-bank indicator can be electric or manual. [~~Examples of ball-bank indicators are shown in the following Figure 2. (See discussion of "Calculated Speed" in paragraph (2) of this subsection).~~]

[~~Figure 2: 43 TAC §25.25(b)(1)(C)~~]

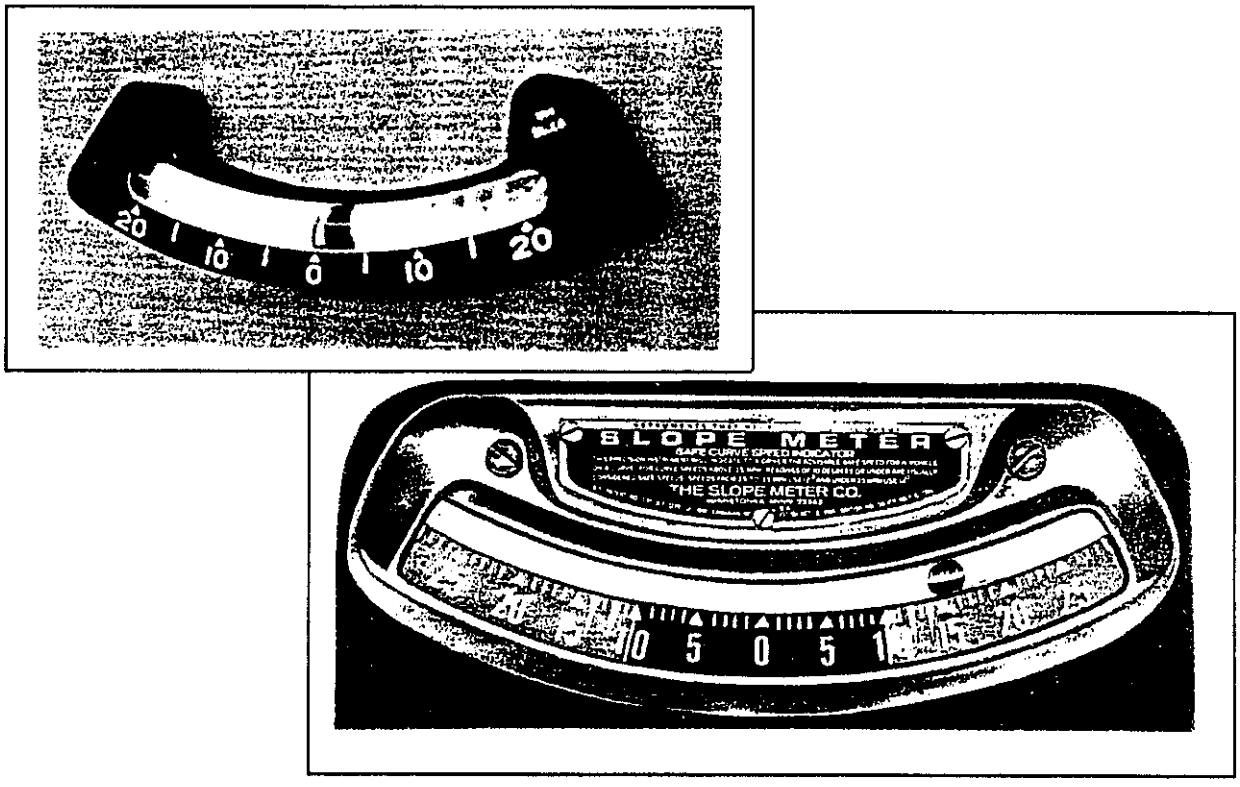

Figure 2. Two Types of ball-bank indicators.

(2) Calculated speed.

(A) For curves and turns, the calculated speed is to be used as a guide for making the initial test run and as a check on the speed obtained by the use of the ball-bank indicator. The calculated speed is not, however, to be used as the sole basis for selecting the posted speed. See "Selecting Speed for Posting" in paragraph (3) [~~(9)~~] of this subsection for additional discussion.

(B) Calculate the design speed of the curve under

consideration using the following formula.

Figure[~~3~~]: 43 TAC §25.25(b)(2)(B)

$$V = \sqrt{15R(e+f)}$$

where:

V = vehicle speed in miles per hour (mph)

R = radius of curve in feet

e = rate of roadway superelevation in feet per foot

f = side friction factor with value depending on speed as follows:

If the speed is:	**Then the side friction factor is:**
35 mph or greater	0.15
between 20 and 35 mph	0.18
20 mph or less	0.31

[~~(3) Selection of car and mounting of ball-bank indicator.~~]

[~~(A) Select an average passenger car for making the test runs and mount the ball-bank indicator on the center line of the dash.~~]

[~~(i) Suitable metal strap-mountings can be made on which to mount the indicator, as shown in the following Figure 4.~~]

[~~Figure 4: 43 TAC §25.25(b)(3)(A)(i)~~]

Figure 4: 43 TAC §25.25(b)(3)(A)(i)

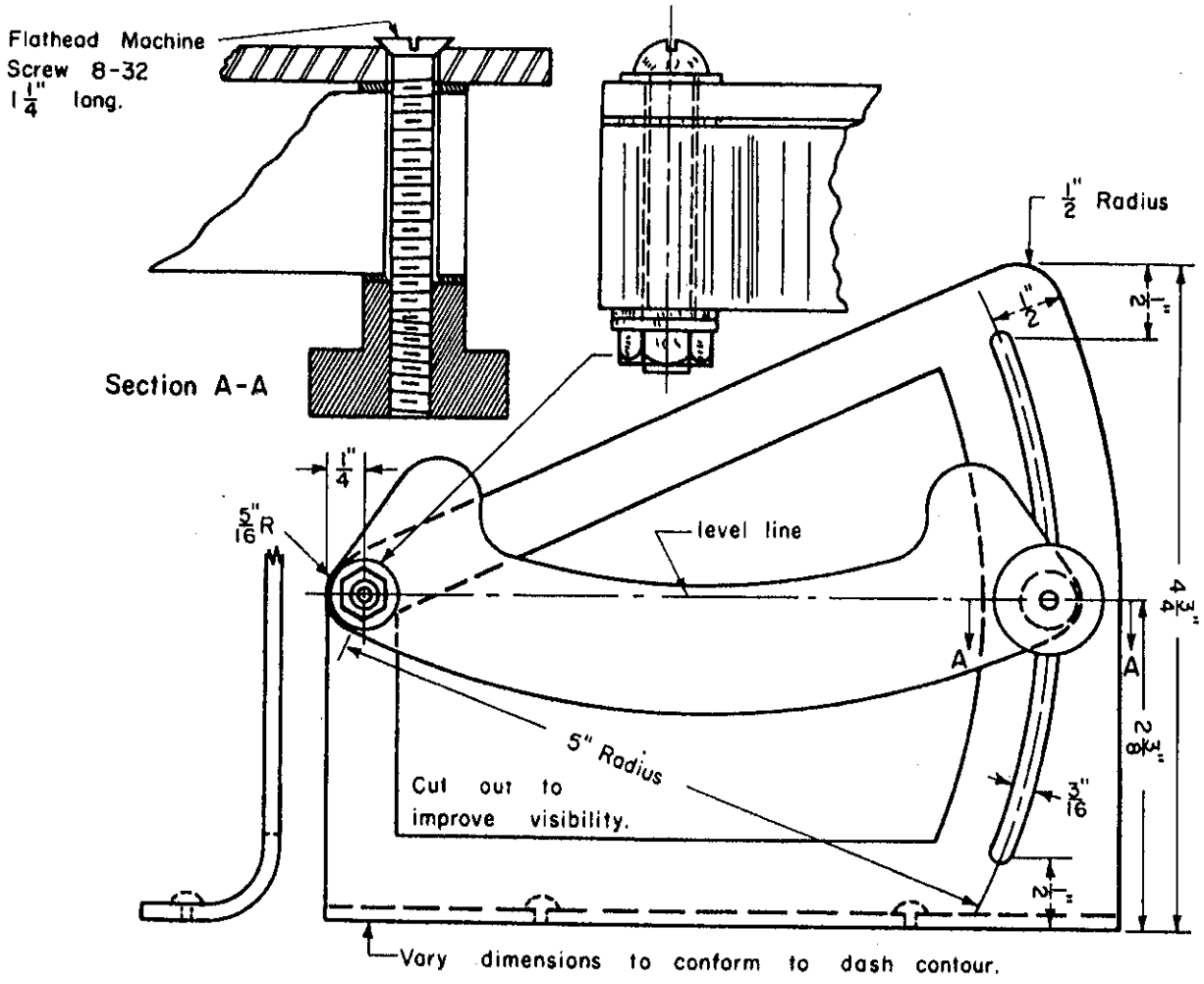

Figure 4. Suggested mounting for ball-bank indicator on dash.

[~~(ii) The metal strap holding the right-hand side of the indicator on dash mountings should be slotted and a thumb nut provided so the steel ball can be adjusted to the zero degree position by raising or lowering the right side of the indicator.~~]

[~~(B) If there is any doubt about the selection of an average car, a ball-bank indicator should be mounted on three different makes or year models for a check.~~]

[~~(4) Before conducting test runs. To ensure proper operation of the ball-bank indicator, it is critical that the following steps be taken before conducting test runs.~~]

[~~(A) Inflate all tires to the uniform pressure used during speedometer calibration.~~]

[~~(B) Calibrate the test vehicle's speedometer in accordance with paragraph (5) of this subsection.~~]

[~~(C) Zero the ball-bank indicator (see procedure in paragraph (6) of this subsection).~~]

[~~(5) Calibrating speedometer.~~]

[~~(A) It is essential that speedometers be calibrated accurately so that advisory speeds will be uniform throughout the state.~~]

[~~(B) Calibrate the speedometer for recording of speed. The accuracy of the odometer for recording distance should be~~

~~checked against a measured distance. Calibration for speed can be done easily with a radar speed meter or by timing the car over a measured distance. The speedometer should be checked for each 5 mile per hour interval over 20 miles per hour, and several test runs should be made for each speed so that an average value may be obtained.~~]

[~~(6) Zeroing the ball-bank indicator.~~]

[~~(A) The ball-bank indicator must be adjusted to the zero reading before test runs are conducted.~~]

[~~(B) This must be done with the car straddling the center line of the pavement on a tangent section to give the effect of a flat level surface, and the driver and recorder in the same position in which they will ride during the test runs. It is essential that the driver and recorder be in the same position when the ball-bank indicator is set to the zero reading as they will be when the test runs are made, because a shift in the load is reflected in a change of the ball-bank indicator reading.~~]

[~~(7) Conducting ball-bank indicator test runs.~~]

[~~(A) The curve should be driven at the calculated speed described in paragraph (2) of this subsection on the initial run.~~]

[~~(B) If the calculated speed is not available, the~~

~~curve should be driven at an estimated speed approximately 5 miles per hour slower than that which the driver feels he or she can maintain. throughout the entire length of the curve.~~]

[~~(C) Each succeeding run should be made at a speed 5 miles per hour greater than the preceding run until the ball-bank indicator reading reaches:~~]

[~~(i) 10 degrees for speeds of 35 miles per hour or more;~~]

[~~(ii) 12 degrees for speeds of 25 and 30 miles per hour; or~~]

[~~(iii) 14 degrees for speeds of 20 miles per hour or less.~~]

[~~(D) On each test run, the driver should reach the test run speed at a distance of at least 0.25 mile from the beginning of the curve and maintain this speed throughout the entire length of the curve. The path of the car throughout the curve should be maintained as nearly as possible in the center of the right hand lane.~~]

[~~(E) Test runs should be made in each direction on each curve.~~]

[~~(F) On each of the speeds of the test runs, the observer must carefully note the position of the ball throughout the length of the curve and record the maximum deflection in~~

~~degrees. The readings should be interpolated as closely as possible to the nearest degree.~~]

[~~(8) Alternate ball-bank indicator test run method. An alternate procedure, intended to minimize the number of test runs required to determine the speed for which the curve is to be posted, is as follows.~~]

[~~(A) Drive the car at a speed of 5 miles per hour around the curve, staying as nearly as possible in the center of the right hand lane, and record the maximum deflection of the ball-bank indicator in degrees.~~]

[~~(i) Record the reading of the ball-bank indicator as plus if the deflection of the ball is to the right on a right hand curve and to the left on a left hand curve.~~]

[~~(ii) Record the reading of the ball-bank indicator as minus if the deflection of the ball is to the left on a right hand curve and to the right on a left hand curve.~~]

[~~(B) Drive around the curve at a constant speed that can be maintained without acceleration or deceleration and without driving outside the right-hand traffic lane.~~]

[~~(i) Record the maximum deflection of the ball-bank indicator.~~]

[~~(ii) Record the speed at which the curve was driven.~~]

[~~(C) Compute the maximum safe speed for the curve by solving the following formula for V_2:~~]

[~~Figure 5: 43 TAC §25.25(b)(8)(C)~~]

$$V_2 = \frac{V_1}{\sqrt{\frac{\theta_1 + (\pm\varphi)}{\theta_2 + (\pm\varphi)}}}$$

where:

θ_1 = maximum ball-bank indicator reading as recorded in subparagraph (B) of this paragraph

θ_2 = 10° for 35 mph and greater *or*

12° for 21 through 34 m.p.h. *or*

14° for 20 mph and less

φ = ball-bank indicator reading as recorded in subparagraph (A) of this paragraph

V_1 = vehicle speed in miles per hour at which θ_1 was recorded in subparagraph (B) of this paragraph

V_2 = calculated safe speed in mph for which curve is good.

[~~(D) Drive around the curve, staying in the right-hand lane, at the calculated speed V_2 without acceleration or deceleration as a check on measurements and computations. The ball-bank indication recorded at speed V_2 should then be:~~]

[~~(i) 10 degrees for speeds of 35 miles per hour or more;~~]

[~~(ii) 12 degrees for speeds of 25 and 30 miles per hour; or~~]

[~~(iii) 14 degrees for speeds of 20 miles per hour or less.~~]

(3) [~~(9)~~] Selecting speed for posting.

(A) Remember, the speed to be posted shall be based on the results obtained from test runs with the ball-bank indicator [~~(described in paragraphs (7) and (8) of this subsection)~~], not the calculated value.

(B) The posted speed shall be a multiple of 5 miles per hour.

(C) In selecting the speed to be posted, care should be taken that the calibrated speed for any given speedometer reading is used rather than the speedometer reading itself.

(D) As a final check, the posted speed is aimed at the highest value that will permit the average car to travel around the curve in its own lane without causing an uncomfortable side throw to its passengers.

(E) The speed to be posted on the curve should not be reduced arbitrarily below that determined by ball-bank indicator test runs [~~the procedures provided in this subsection~~].

(F) When there is a reverse curve or a series of three or more curves, the advisory speed sign shall show the value for the curve having the slowest safe speed in the series.

(c) Intersections.

(1) Introduction. Advisory zones may be posted at:

(A) intersections such as traffic circles (only a few

of which are left in the state) designed for an operating speed less than the speed of the approaches; and

(B) intersections with restricted sight distances which require a reduction in speed for safe operation.

(2) View obstructions. Trial runs should be conducted to determine the safe and reasonable speed for the area. For intersections having view obstructions, this speed may be posted as an advisory speed below a warning sign to warn motorists of the limited sight distance.

(d) Narrow and one-lane bridges.

(1) Introduction.

(A) The following bridges may require advisory speeds:

(i) narrow bridges with clear width between curbs less than 18 feet, but more than 16 feet; and

(ii) one lane bridges with clear width between curbs of 16 feet or less.

(B) Advisory speed zones should be applied for such structures when horizontal or vertical sight distance restrictions on the approaches require a reduction of approach speeds for safe operation.

(C) Advisory speeds of this type are intended to eliminate the element of surprise.

(2) Placement of signs.

(A) The normal location of the W5-2 or W5-2a NARROW BRIDGE or W5-3 ONE LANE BRIDGE signs, under which a W13-1 or SW13-1 ADVISORY SPEED sign would be mounted, is specified in Table 2c-4 of the latest edition of the Texas Manual on Uniform Traffic Control Devices for Streets and Highways.

(B) The signs may be located at a greater distance in advance of the bridge if necessary to allow sufficient time and distance for deceleration and may be repeated at the point where the structure first comes into view.

(e) Descending grades of six percent or greater.

(1) Introduction. The posting of advisory speed may be prudent where vehicles may attain a speed in excess of that required:

(A) for a safe stopping distance; or

(B) for safe travel around curves at the bottom or within the limits of the grade.

(2) Determining minimum sight distances. The minimum horizontal and vertical sight distances on descending grades of 6% or greater should be determined either by field measurements or by calculations from the plans.

(3) Calculation. Using the minimum sight distance as the safe stopping distance, the critical speed should be calculated from the following formula.

Figure [~~6~~]: 43 TAC §25.25(e)(3)

$$d = \frac{V^2}{30(0.4 \pm g)} + 2.93V$$

where:

d = sight distance for safe stopping distance in feet

V = the velocity in miles per hour

g = percent of grade (in decimal form) divided by 100.

(4) If a curve is involved.

(A) If a curve is within the limits of or at the bottom of such a grade, the advisory speed for the curve should be determined by the procedure found in subsection (b) of this section.

(B) The speed to be posted should be the lower of the two speeds found for providing a safe stopping distance and that for safe travel around the curve.

(f) Dips and exit ramps.

(1) Dips.

(A) An advisory speed may be desirable where a depression in the road profile is sufficiently abrupt to:

(i) create a hazardous condition;

(ii) cause discomfort to passengers;

(iii) cause a shifting in cargo; or

(iv) deflect a vehicle from its true course when crossed at speeds prevailing on the approaches.

(B) The speed to be posted for dips should be determined by trial runs. It should be the highest speed that will enable a vehicle to travel over the dip:

(i) without considerable discomfort to passengers;

(ii) without causing a shifting of cargo; or

(iii) without causing a deflection of a vehicle from its true course.

(2) Exit ramps. The Exit Speed or Ramp Speed signs (W13-2 and W13-3) are intended for use where engineering investigations of roadway, geometric, or operating conditions show the necessity of advising drivers of the maximum recommended speed on a ramp.