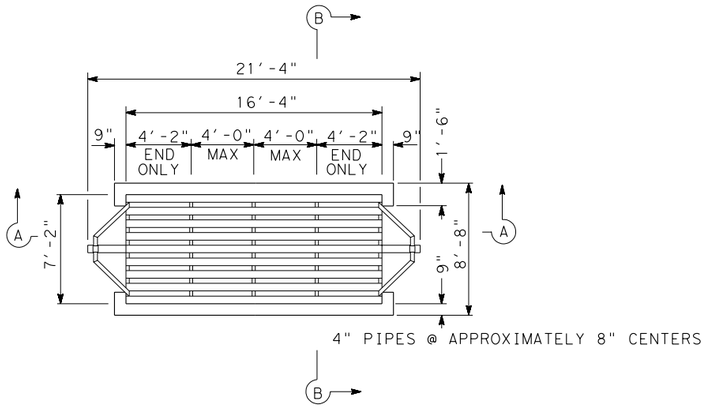

PLAN VIEW

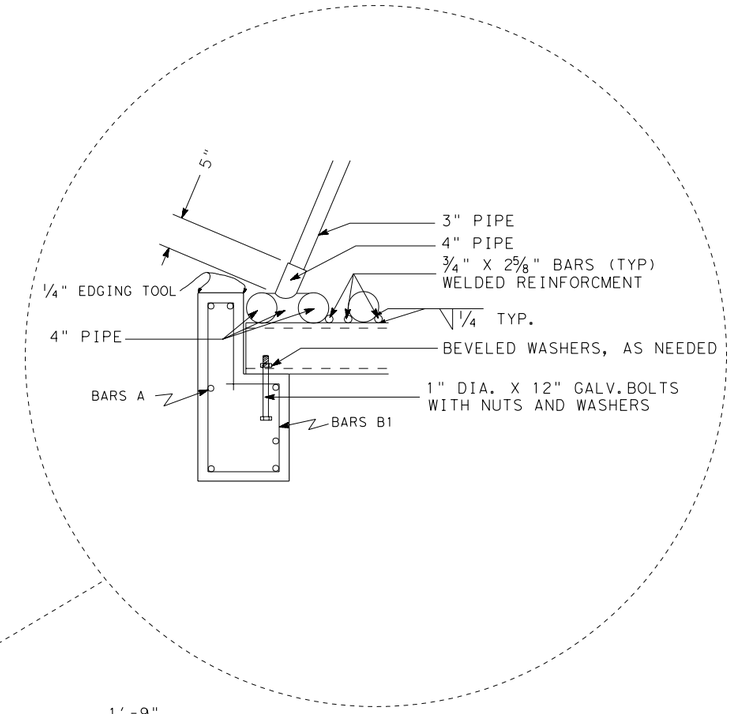

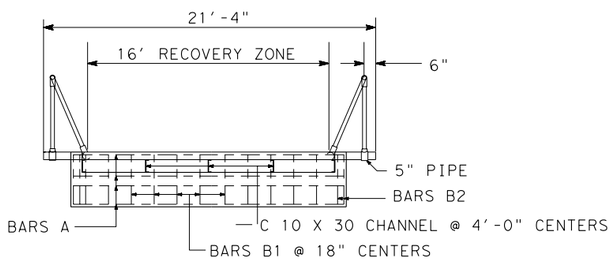

SECTION A-A

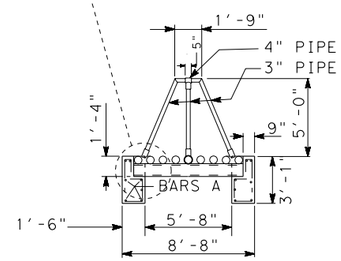

SECTION B-B

GENERAL NOTES:

QUANTITIES SHOWN ARE FOR CONTRACTORS INFORMATION ONLY.

ALL DIMENSIONS RELATION TO REINFORCING STEEL ARE TO THE CENTERLINE OF BARS.

PROVIDE PIPE IN CONVENIENT LENGTHS (10'-0" MIN.) AND BUTT WELD IN ACCORDANCE WITH ITEM 448. AS AN ALTERNATIVE, PROVIDE OPTIONAL ½" JOINT AS SHOWN.

IF ROCK IS ENCOUNTERED, DEPTH OF FOUNDATION MAY BE VARIED AS DIRECTED.
PROVIDE NEW PIPE CONFORMING TO ASTM A501 OR ASTM A53 TYPES E OR S, GRADE B, STANDARD WEIGHT.

HOT DIP GALVANZE CATTLE GUARD IN ACCORDANCE WITH ASTM A123 AND A153.

BILL OF MATERIALS

NO.	DESCRIPTION	SIZE	LENGTH
1	STEEL PIPE	4"	21'-4"
9	STEEL PIPE	4"	16'-3"
2	STEEL PIPE	3"	12'-7"
2	STEEL PIPE	3"	5'-0"
4	STEEL PIPE	6"	4"
10	STEEL PIPE	4"	5"
2	STEEL PIPE	5"	5"
100	RODS	¾"	2⅝"
5	CHANNELS	C10 X 30	7'-1"
22	REINF. STEEL (BARS B1)	#3	8'-0"
8	REINF. STEEL (BARS B2)	#3	8'-6"
14	REINF. STEEL (BARS A)	#5	17'-6"
10	BOLTS	1" DIA.	12"
	CLASS A CONCRETE	4.81 CY	

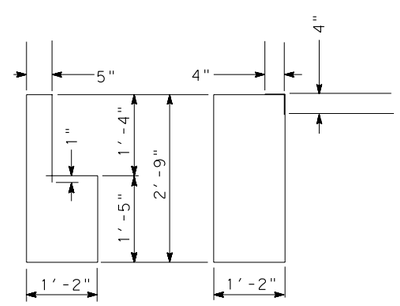

BARS B1 BARS B2

Texas Department of Transportation
Austin District Design

CATTLE GUARD DETAILS (16' RECOVERY ZONE)

AUSTIN DISTRICT STANDARD

© TxDOT 2002

REVISIONS	DIST	FED REG	FEDERAL AID PROJECT •	SHEET
3/03 District Update	AUS	6		
9/04 2004 Update	COUNTY	CONTROL	JOB	HIGHWAY

FILE: CGD-16-04.dgn