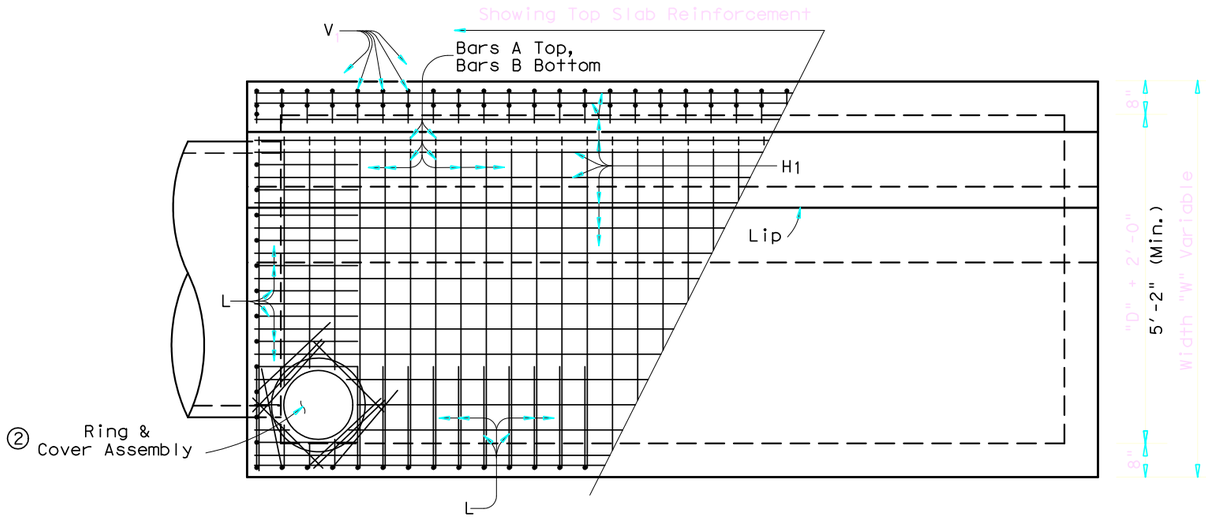

PLAN

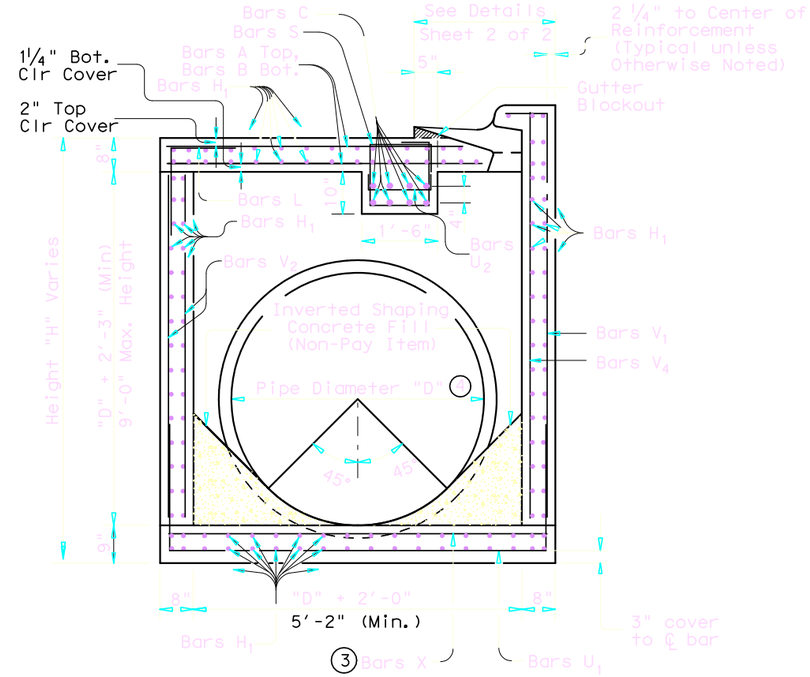

SECTION A-A

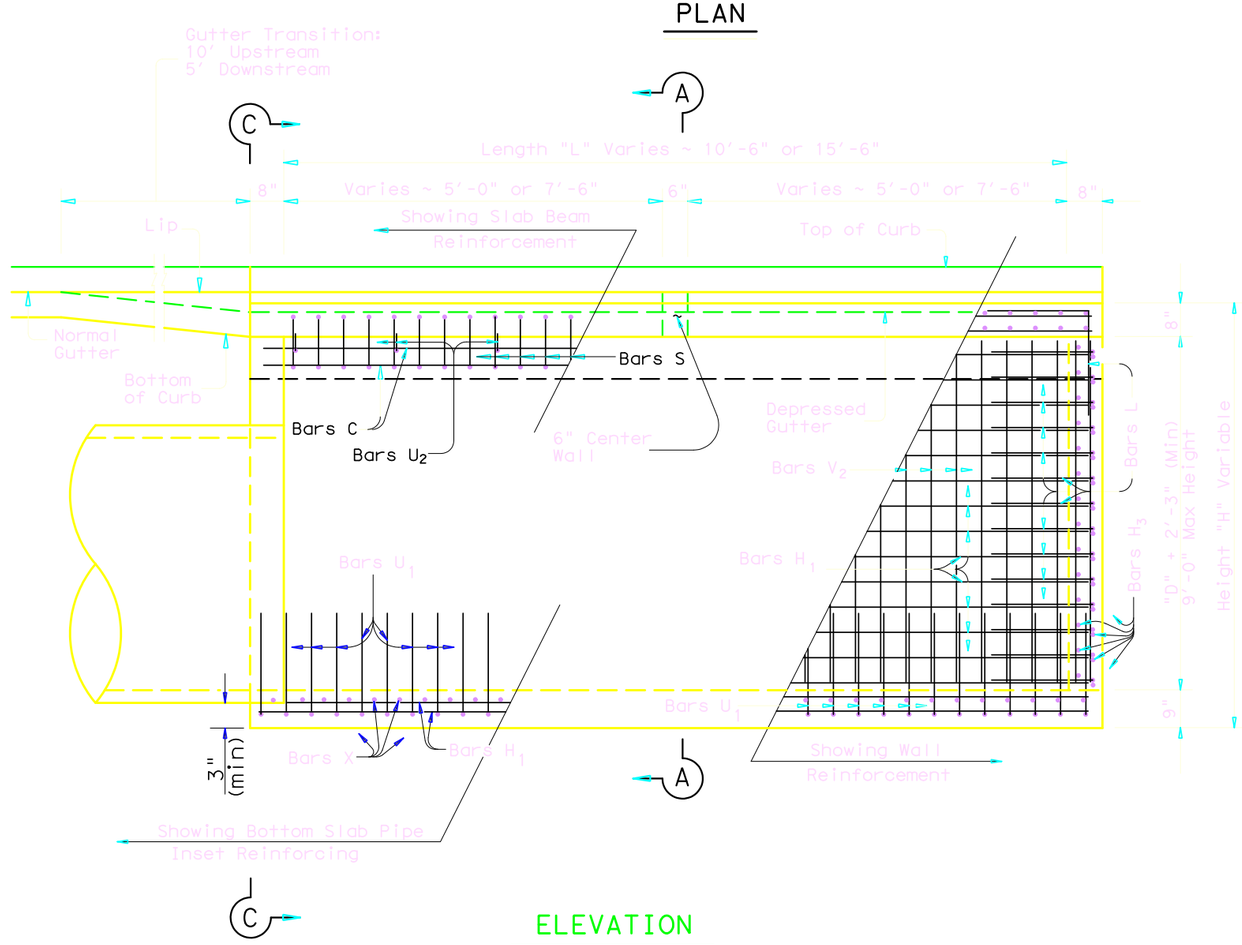

ELEVATION

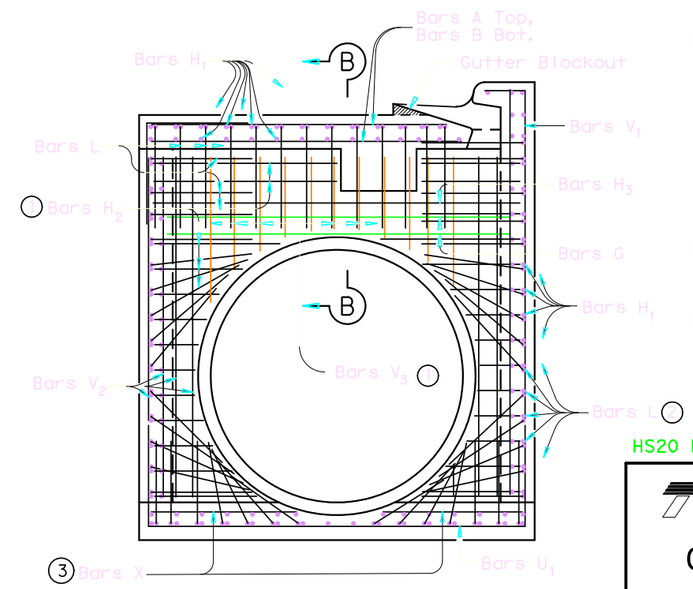

END VIEW C-C

① Cut bars H and V to fit as shown. Allow 2" for End Cover (Typical).

② Place bars L with Bars A, H, and V as shown at RCP, corners and Manhole Assembly. Place manhole ring such that interior opening aligns with inside faces of two corner walls. Place 4 ~ #4 Bars as shown in Plan View around Ring Assembly to engage cut slab Bars A, B & H .

③ Cut bars X and H as Required to accommodate Pipe Inset in Bottom Slab and End Wall.

"D" = Pipe Diameter

HS20 LOADING

Sheet 1 of 2

Texas Department of Transportation
Austin District Design

CURB INLET DETAILS

TYPE IR & IIR

(FOR 42" TO 60" DIA. RCP)

Austin District Standard

© TxDOT 2002

REVISIONS	DISTRICT	FEDERAL AID PROJECT			SHEET
9/04 2004 Update	14				
10/08 Rev. Blockout Detail	COUNTY	CONTROL	SECT	JOB	HIGHWAY
04/09 Remove Reinf. Lug					

CI-TY1R-TY2R-B-09.dgn

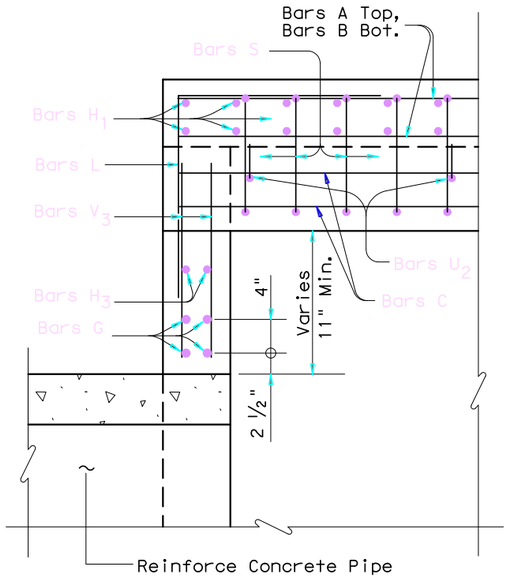

SECTION B-B

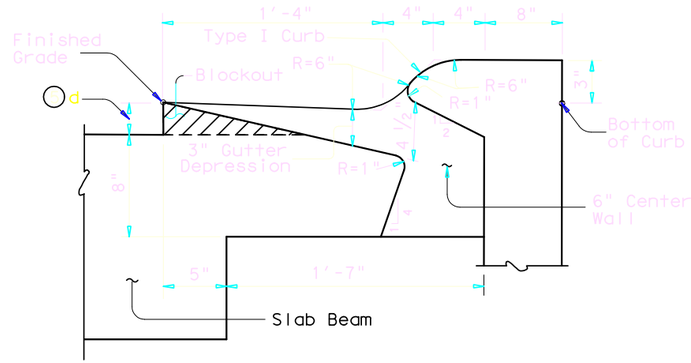

THROAT DETAILS TYPE IR INLETS

⑤ "d" = Depth of Overlay.

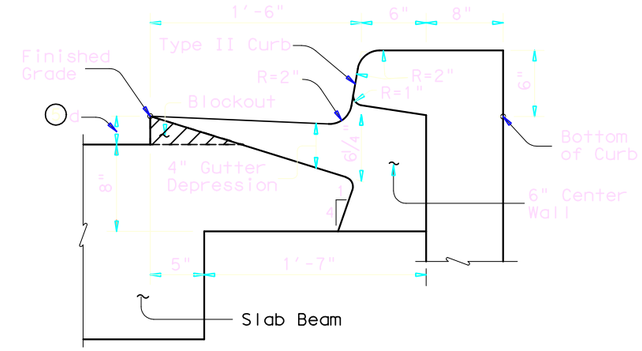

THROAT DETAILS TYPE IIR INLETS

BAR TABLE		
BAR	SIZE	MAX. SPA.
A	#5	6"
B	#5	6"
C	#7	As Shown
G	#6	As Shown
H	#5	6"
H	#5	6"
H	#5	6"
L	#5	6"
S	#4	6"
U	#5	6"
U	#3	2'-0"
V	#5	6"
V	#5	6"
V	#5	6"
V	#5	6"
X	#5	6"

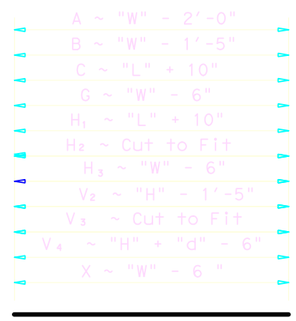

BARS A, B, C, G, H_1, H_2, H_3, V_2, V_3, V_4 & X

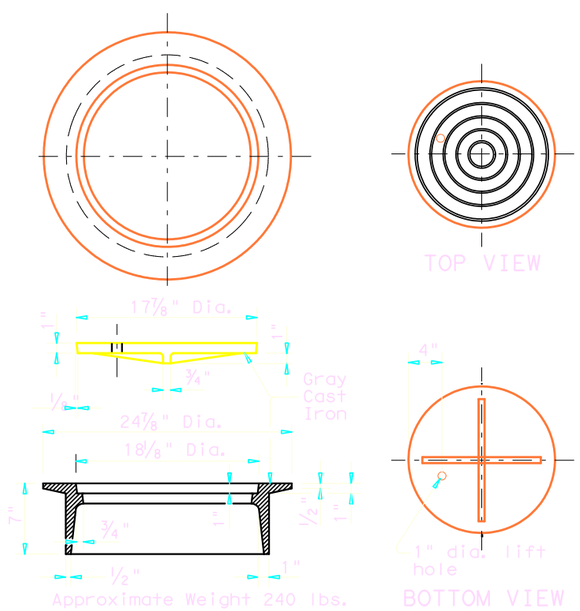

RING AND COVER DETAILS

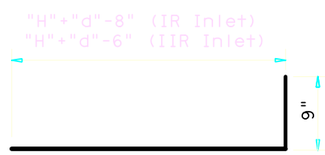

BARS V_1

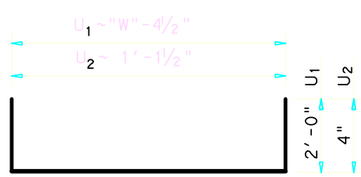

BARS U

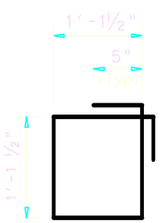

BARS S

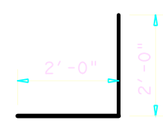

BARS L

GENERAL NOTES:

Use Class "C" concrete for box inlet bottom and walls, use Class "S" concrete for box inlet top and longitudinal beam.

Ring and cover will conform to the requirements of AASHTO M306, "Standard Specification for Drainage Structure Castings". Materials will conform to ASTM A48, Class 35B for gray iron castings or ASTM A536, Grade 65-45-12 for ductile iron castings. Aluminum alloy castings will not be permitted. Consider ring and cover subsidiary to the pertinent Item.

If two inlets are to be installed end to end, install equivalent opening or pipe segment in end walls between boxes. Reinforce each end wall between inlet boxes as shown for single box.

Build inlets in stages so that base laying operations may be continuous over the top of the inlet. Backfill any additional excavation required below finished base grade within roadway limits with Class "B" concrete.

Consider work or materials involved for inlet stage construction subsidiary to the pertinent Items.

Ensure connecting pipes enter within 10 degrees of normal to inlet wall. If necessary, use pipe elbow or curved approach alignment to stay within this limit.

Provide gutter blockout(s) for the length of each inlet for temporary drainage. Fill blockout(s) after final roadway paving. Consider this work subsidiary to pertinent Item.

HS20 LOADING

Sheet 2 of 2

Texas Department of Transportation
Austin District Design

CURB INLET DETAILS

TYPE IR & IIR

(FOR 42" TO 60" DIA. RCP)

Austin District Standard

© TxDOT 2002

REVISIONS	DISTRICT	FEDERAL AID PROJECT			SHEET
9/04 2004 Update 10/08 Rev. Blockout Detail 04/09 Remove Reinf. Lug	14				
	COUNTY	CONTROL	SECT	JOB	HIGHWAY

CI-TY1R-TY2R-B-09.dgn