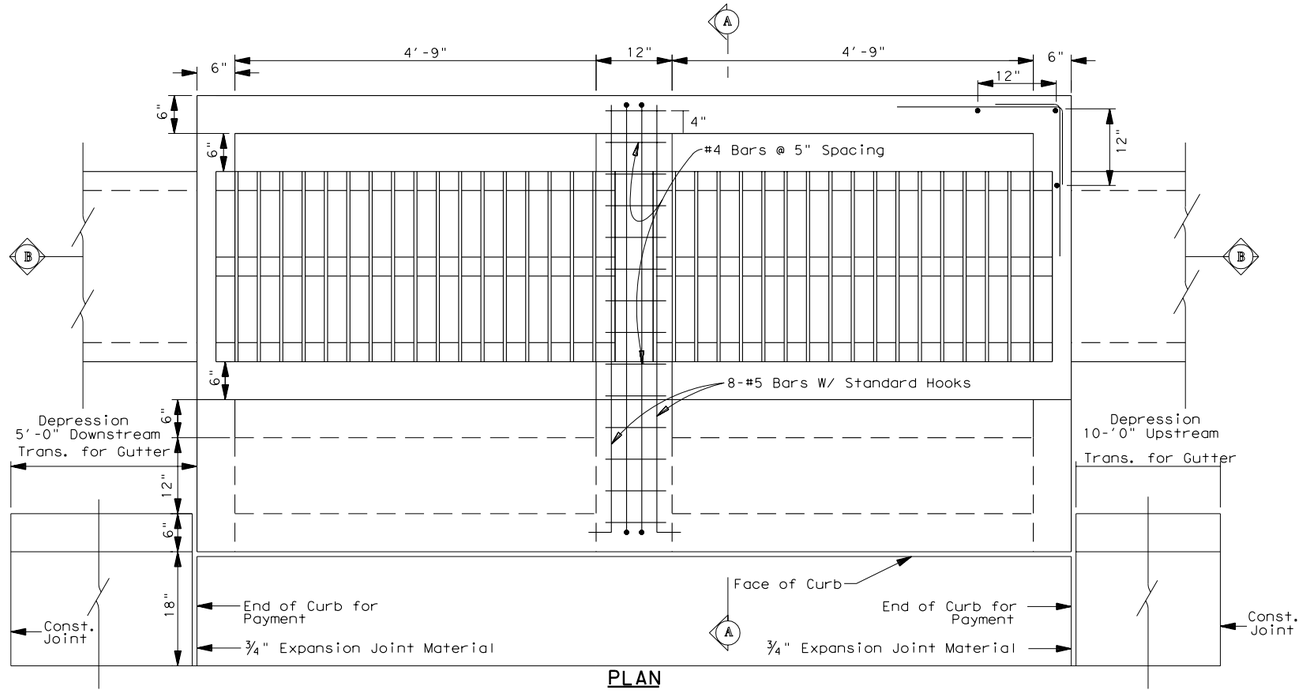

PLAN

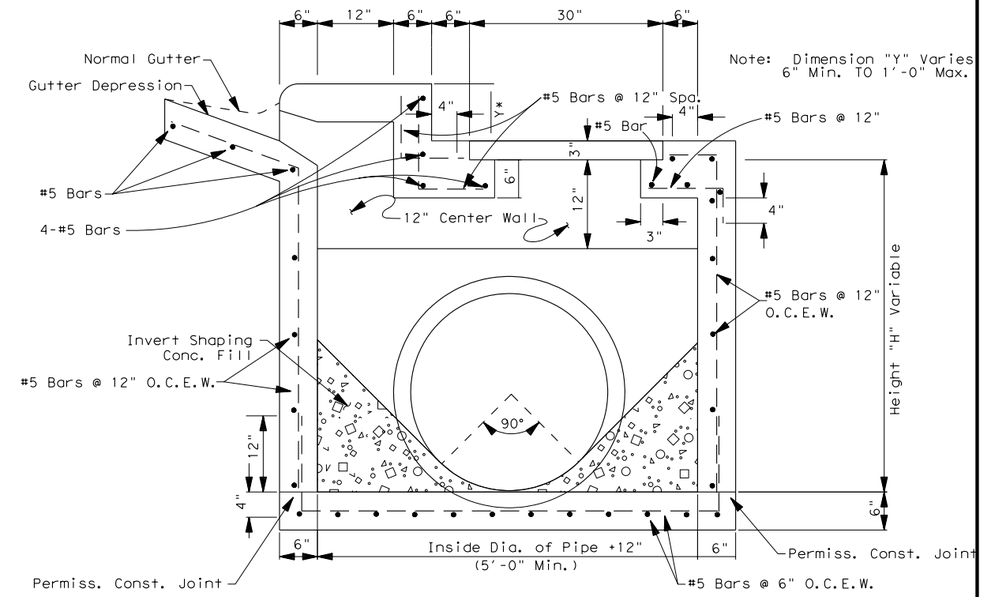

SECTION A-A

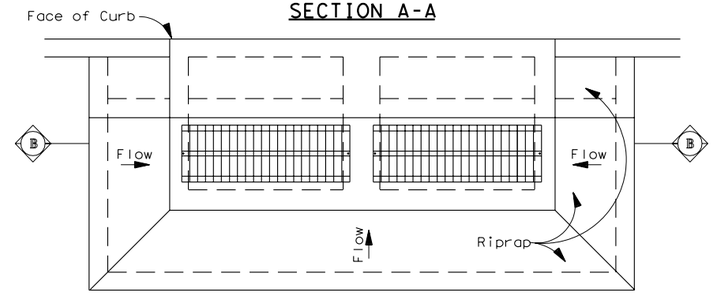

RIPRAP PLAN

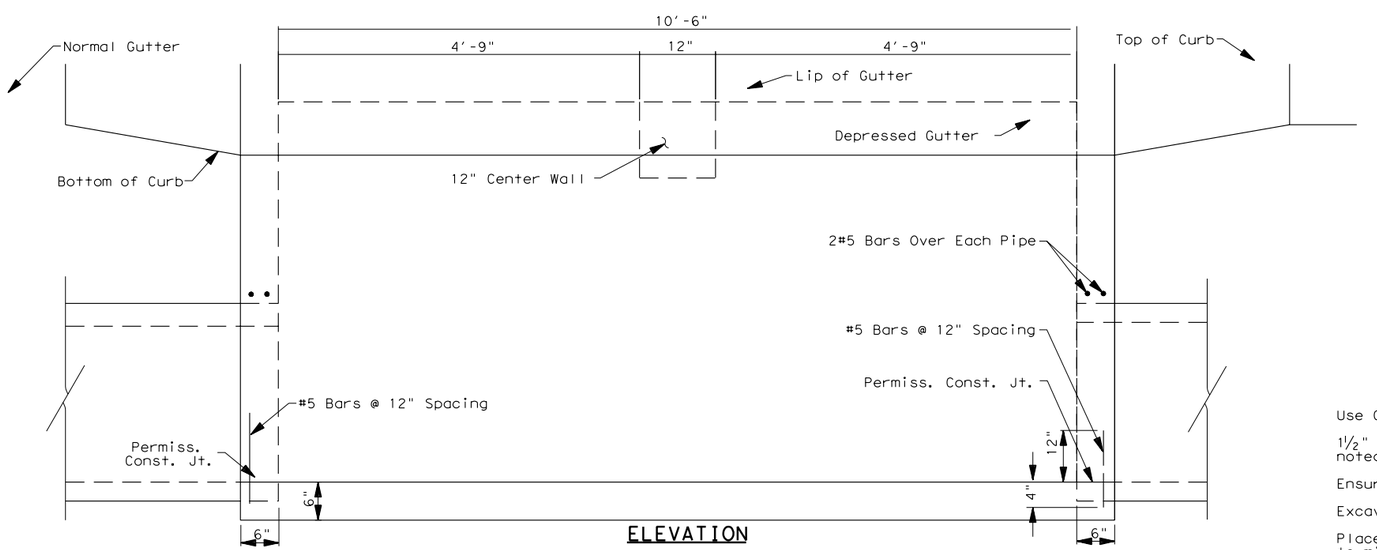

ELEVATION

GENERAL NOTES:

Use Class "A" for all Concrete for Curb Inlet.

1½" Minimum clearance on all bars unless otherwise noted on the plans.

Ensure all Bolts, Nuts and Washers are galvanized.

Excavation and Backfill subsidiary to pertinent Item.

Place Riprap Concrete as soon as practical to minimize erosion.

Placement of Riprap Concrete Class "B" and Grates will be in Accordance with Item 432, "Riprap" and Item 471, " Frames, Grates, Rings and Covers."

Use WWF 6X6-W2.9XW2.9 for Reinforcement for Riprap.

Consider subsidiary to pertinent Item.

SHEET 1 OF 2

Texas Department of Transportation
Austin District Design

CURB INLET DETAILS TYPE II-G

Austin District Standard

© TxDOT 2003	DIST	FED REG	FEDERAL AID PROJECT •			SHEET
REVISIONS	AUS	6				
3/03 District Update 9/04 2004 Update	COUNTY		CONTROL	SECT	JOB	HIGHWAY

CI-TY2G-04.dgn

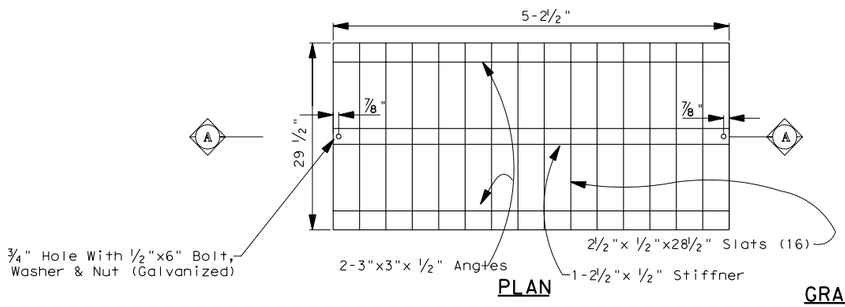

PLAN

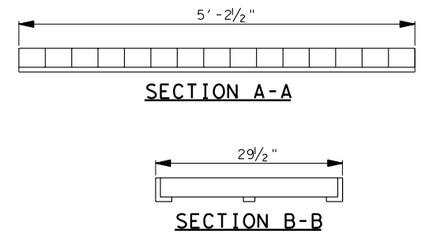

SECTION A-A

SECTION B-B

GRATE DETAILS

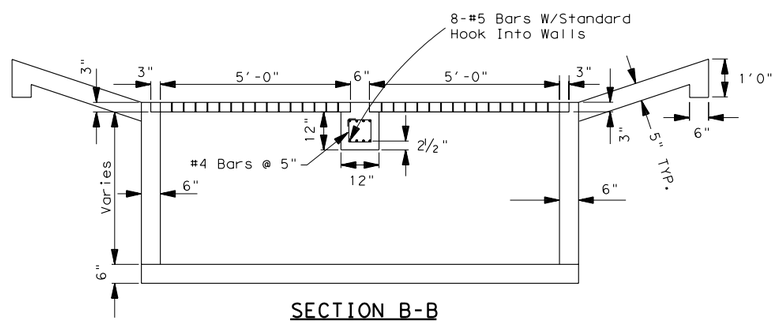

SECTION B-B

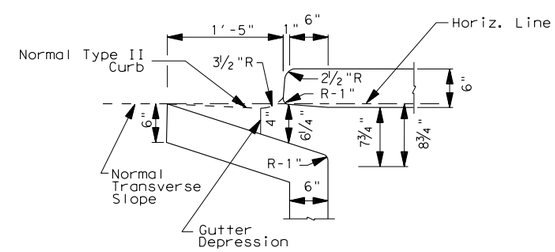

THROAT DETAILS FOR TYPE II CURB INLET

SHEET 2 OF 2

Texas Department of Transportation
Austin District Design

CURB INLET DETAILS TYPE II-G

Austin District Standard

© TxDOT 2003	DIST	FED REG	FEDERAL AID PROJECT •			SHEET
REVISIONS	AUS	6				
3/03 District Update 9/04 2004 Update	COUNTY		CONTROL	SECT	JOB	HIGHWAY

CI-TY2G-04.dgn