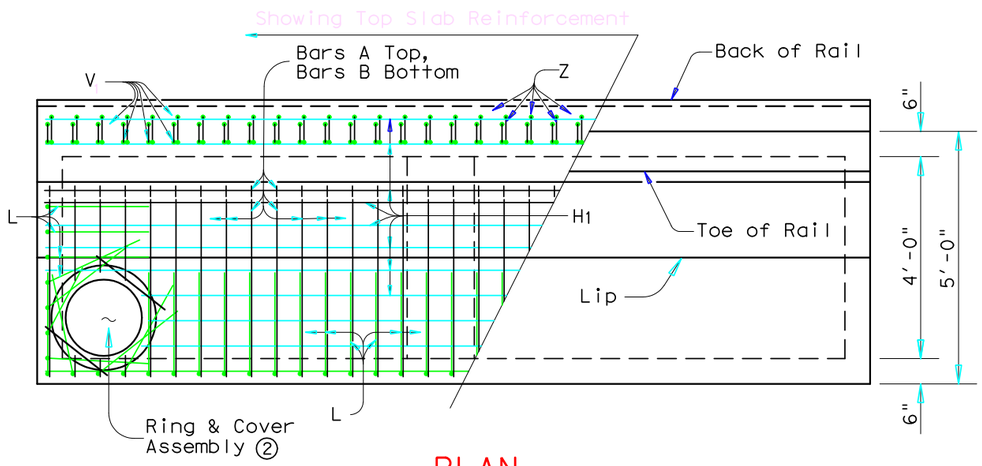

PLAN

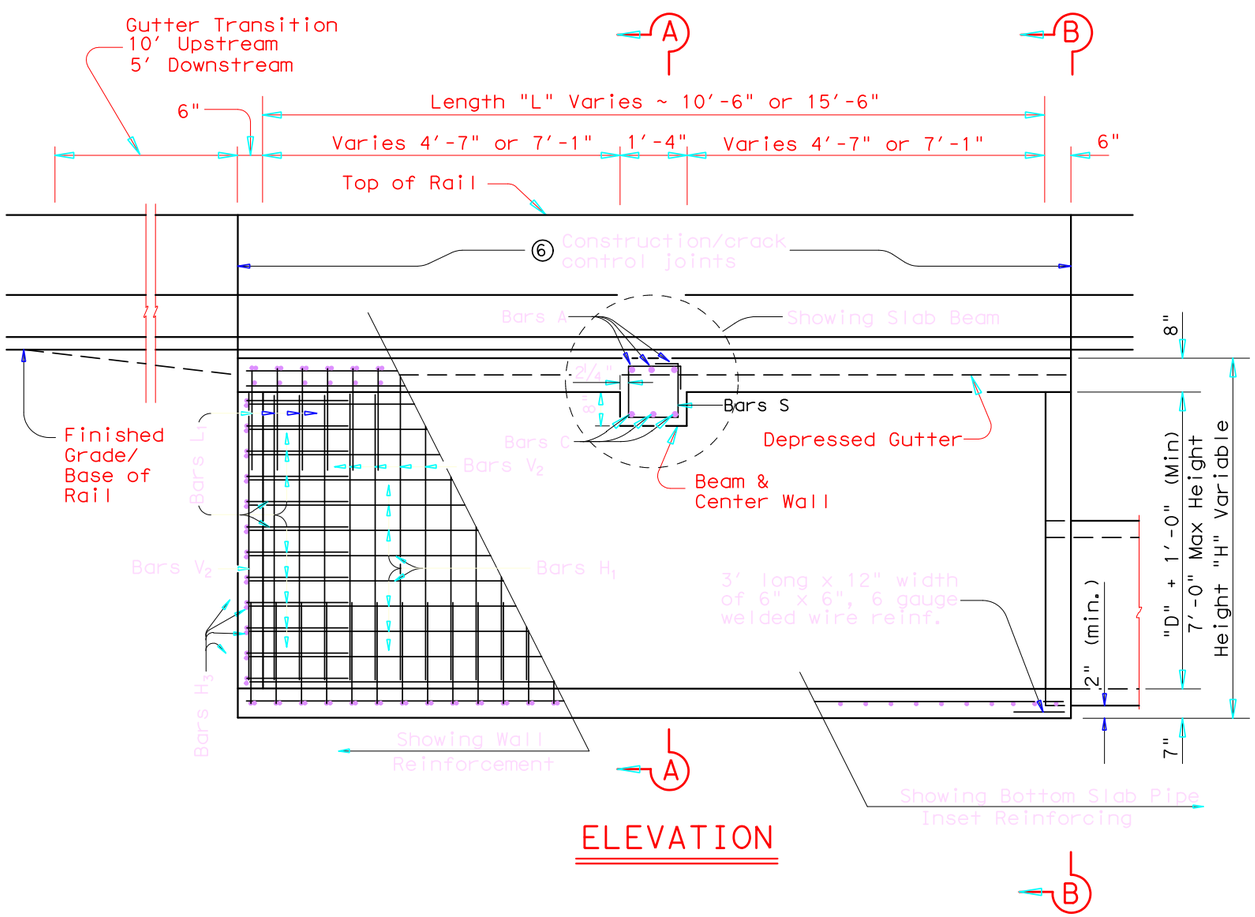

ELEVATION

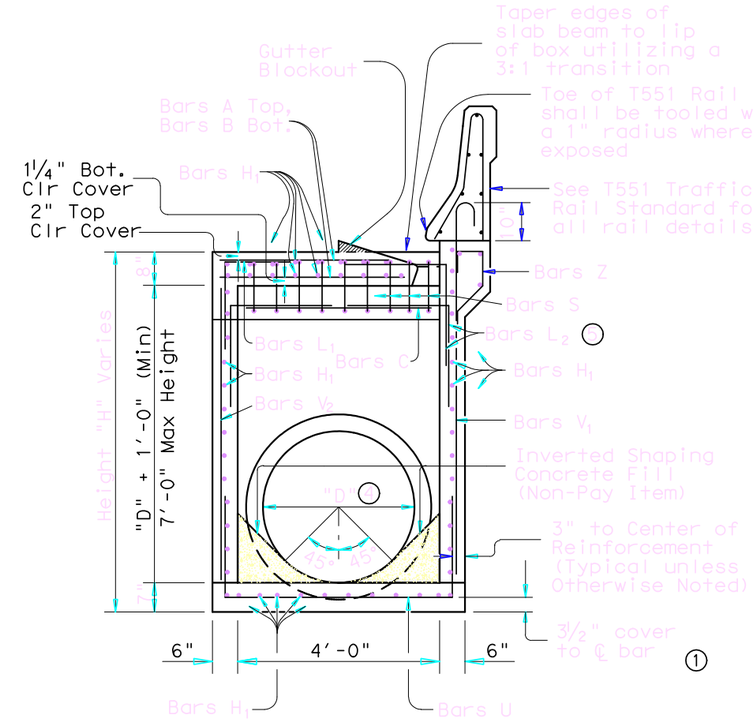

SECTION A-A

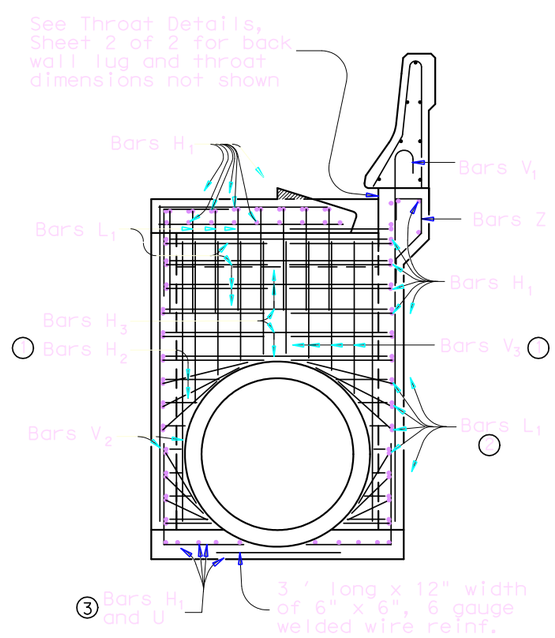

END VIEW B-B

① Cut bars H & V as shown. Allow 3" for End Cover (Typical).

② Place bars L with Bars A, H, and V as shown at RCP, corners and Manhole Assembly. Place Manhole ring such that interior opening aligns with inside faces of two corner walls. Place 4 ~ #4 Bars as shown in Plan View around Ring Assembly to engage cut slab Bars A, B & H.

③ Cut bars H and end bar U as required to accommodate pipe recess in bottom slab.

④ "D" = Pipe Diameter

⑤ Align Bars L with Beam Reinforcement Bars C and Top Slab Reinforcement Bars A at ends of transverse beam (12 Bars L_2 Total)

⑥ Contruction/crack control joint shall be provided at edges of drop inlet box. Rail reinf. shall be run continuous through joints. See plans for rail anchorage (required) at limits of drop inlet box.

HS20 LOADING

Sheet 1 of 2

Texas Department of Transportation
Austin District Design

INLET DETAILS, TYPE E (BARRIER WALL - T551)

(FOR 36" DIA. RCP & SMALLER)

Austin District Standard

© TxDOT 2002	DISTRICT	FEDERAL AID PROJECT			SHEET
REVISIONS 9/04 2004 Update 4/09 Revise Entire Std.	14				
	COUNTY	CONTROL	SECT	JOB	HIGHWAY

CI-TYE-BARRIERWALL-T551-09.dgn

BAR TABLE		
BAR	SIZE	MAX. SPA.
A	#5	5"
B	#5	5"
C	#8	As Shown
H_1	#5	6"
H_2	#5	6"
H_3	#5	6"
L_1	#5	6"
L_2	#8	As Shown
S	#4	5"
U	#5	6"
V_1	#5	6"
V_2	#5	6"
V_3	#5	6"
Z	#5	6"

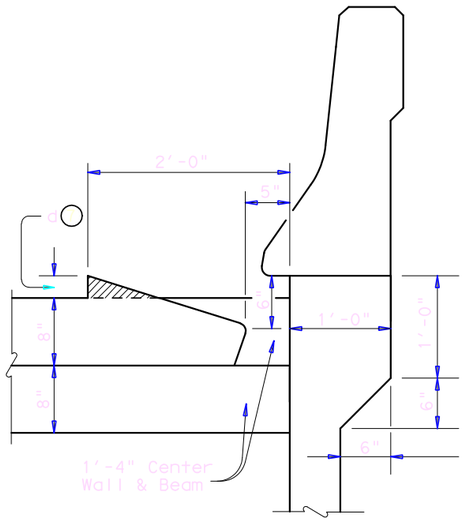

THROAT DETAILS

⑦ "d" = Depth of Overlay.

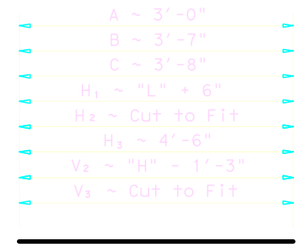

BARS A, B, C, H_1, H_2, H_3, H_4, V_2, & V_3

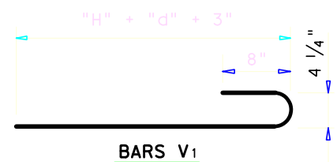

BARS V_1

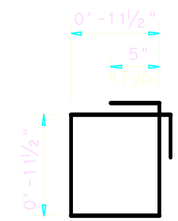

BARS S

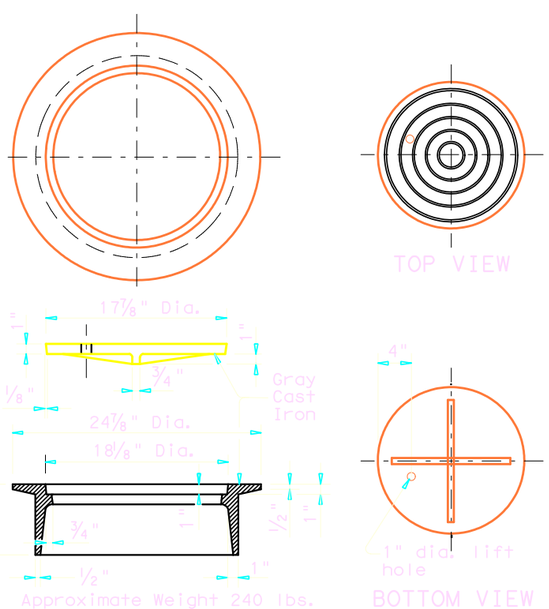

RING AND COVER DETAILS

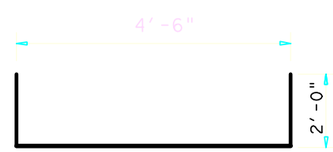

BARS U

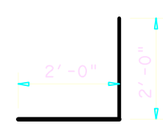

BARS L_1 & L_2

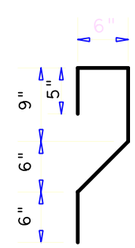

BARS Z

GENERAL NOTES:

Use Class "C" concrete for inlet box bottom and walls; use Class "S" concrete for inlet box top.

Ring and cover must meet requirements of AASHTO M306, "Standard Specification for Drainage Structure Castings". Materials shall conform to ASTM A48, Class 35B for gray iron castings or ASTM A536, Grade 65-45-12 for ductile iron castings. Aluminum alloy castings will not be permitted. Consider ring and cover subsidiary to the pertinent Item.

If two inlets are to be installed end to end, install equivalent opening or pipe segment in end walls between boxes. Each end wall between inlet boxes will be reinforced as shown for single box.

Build inlets in stages so that base laying operations may be continuous over the top of the inlet. Backfill any additional excavation required below finished base grade within roadway limits with Class "B" Conc (Riprap).

Consider work or materials involved for inlet stage construction subsidiary to the pertinent Items.

Ensure connecting pipes enter within 10 degrees of normal to inlet wall. If necessary, use pipe elbow or curved approach alignment to stay within this limit.

Provide gutter blockout(s) for the length of each inlet for temporary drainage. Fill blockout(s) after final roadway paving. Consider this work subsidiary to pertinent Item.

HS20 LOADING

Texas Department of Transportation
Austin District Design

INLET DETAILS, TYPE E (BARRIER WALL - T551)

(FOR 36" DIA. RCP & SMALLER)

Austin District Standard

© TxDOT Aug. 2002

REVISIONS	DISTRICT	FEDERAL AID PROJECT			SHEET
9/04 2004 Update	14				
4/09 Revise Entire Std.	COUNTY	CONTROL	SECT	JOB	HIGHWAY

CI-TYE-BARRIERWALL-T551-09.dgn