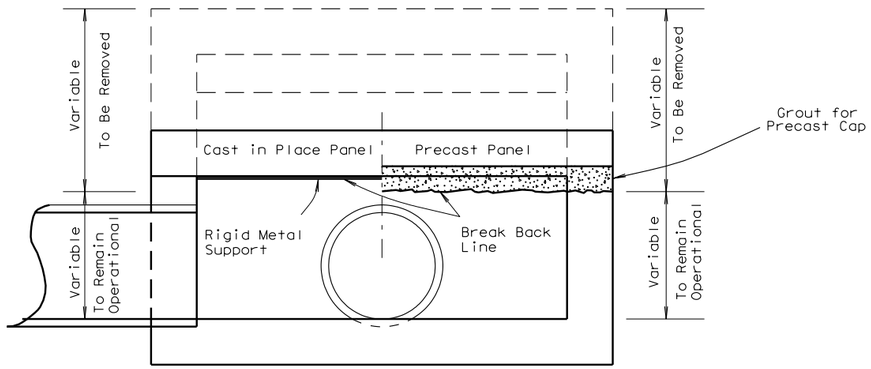

ELEVATION OF CAPPED INLET

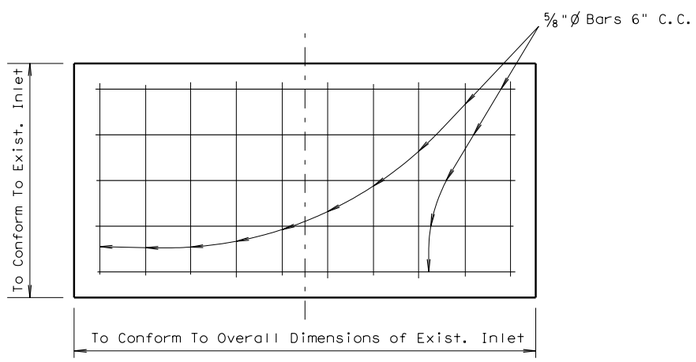

PLAN VIEW OF CAP

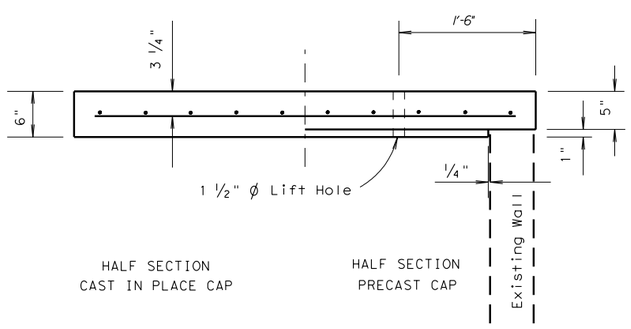

ELEVATION OF CAP

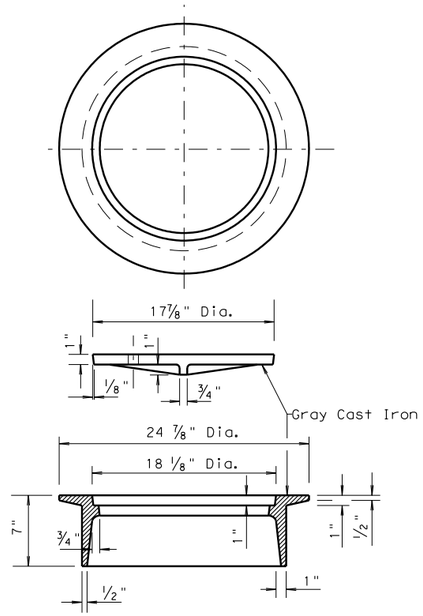

Approximate Weight 240 lbs.

RING AND COVER DETAILS

V-1846-2 or Equal

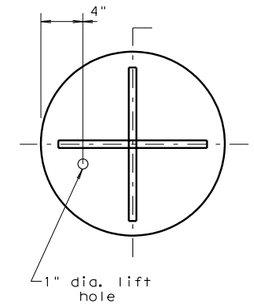

BOTTOM VIEW

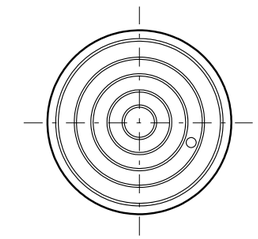

TOP VIEW

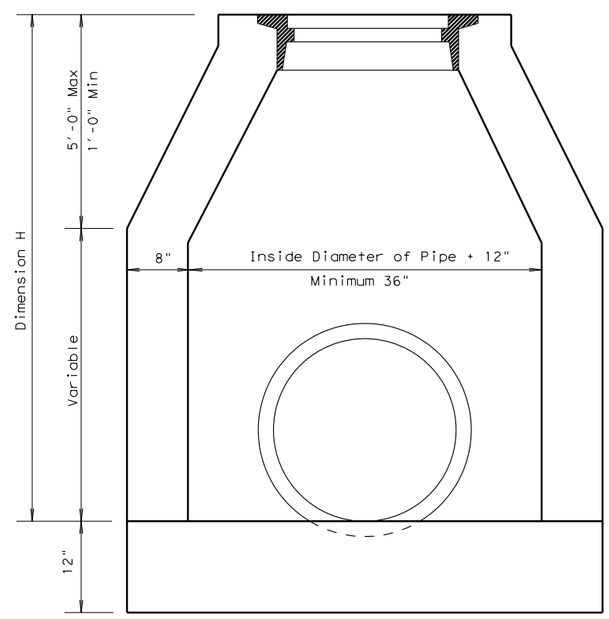

℄ SECTION OF MANHOLE

GENERAL NOTES :

Use class "A" for all Concrete.

Construct Manhole walls of concrete sewer brick, precast concrete, or concrete blocks. Ensure maximum size of concrete block is 8"x8"x16".

Fit existing inlets to be capped with either a precast or cast in place cap, as directed. Use noncorroding rigid metal to form the bottom of cast in place cap. Ensure the size and shape conforms to the inside dimensions of the inlet. Ensure the form is suspended such that no inside support is required.

Payment for existing inlets to be capped shall be in accordance with Item 479, "Adjusting Manholes and Inlets".

Cap Inlets in lieu of removing if approved by the Engineer.

Consider excavation and backfill, frames, grates, rings and covers subsidiary to pertinent Items.

Ensure connecting pipes enter within 10 degrees of normal to inlet wall. Use pipe elbow or curved approach alignment as necessary to meet this requirement.

Use alternate frame and cover only as approved by the Engineer.

Texas Department of Transportation
Austin District Design

MANHOLE TYPE A AND CAPPED INLET DETAILS

Austin District Standard

© TxDOT 2003

REVISIONS
3/03 District Update
9/04 2004 Update

DIST	FED REG	FEDERAL AID PROJECT ◆	SHEET
AUS	6		

COUNTY	CONTROL	SECT	JOB	HIGHWAY

FILE: MH-TYA-04.dgn