New Standards

Presented by:

Amy Eskridge, P.E.

BRIDGE DIVISION

Overview

- Prestressed I-Girders
- Decked Slab Beams

Prestressed I-Girder

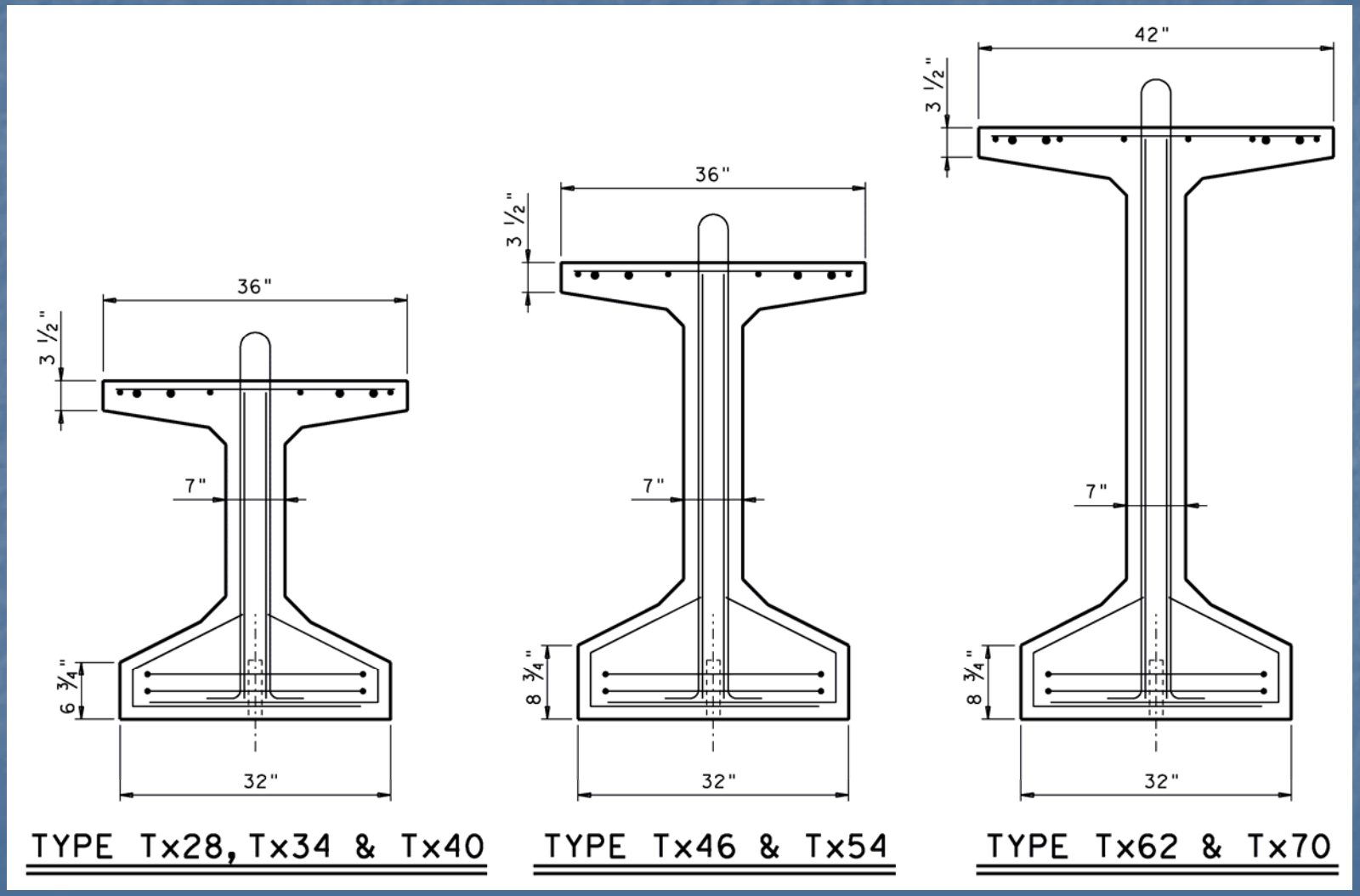

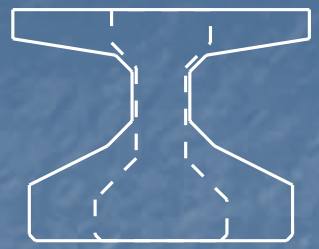

Tx28

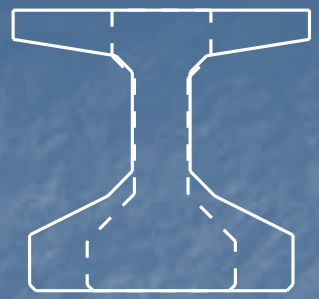

Tx34

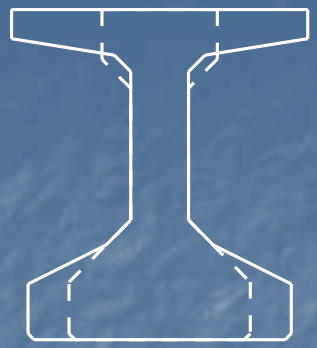

Tx40

Tx46

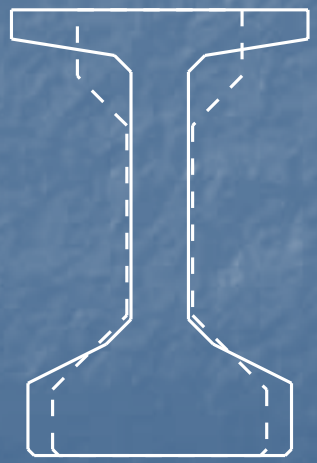

Tx54

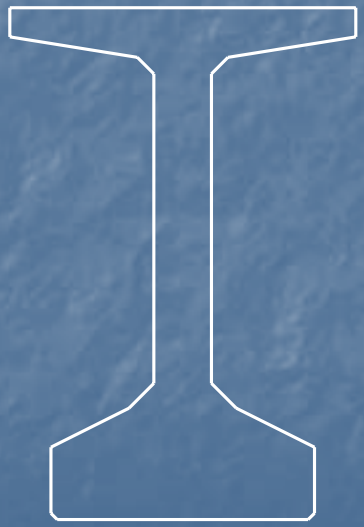

Tx62

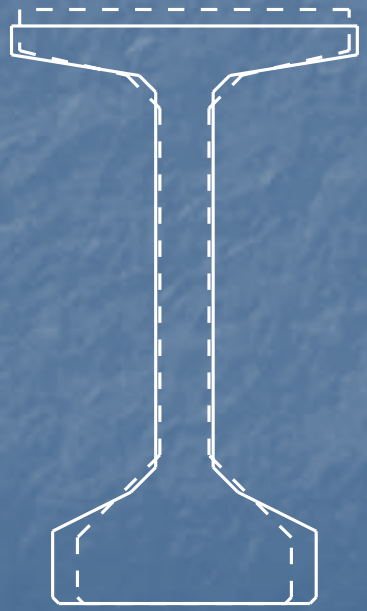

Tx70

Nomenclature

- New I-Girder
  - IGD, IGEB, IGMS, IGND, AIG
- Old I-Beam
  - IBD, IBEB, IBMS, IBND, AIB

HAMMERMILL
NEW!
PAPER

Prestressed I-Girder

- Benefits of the new sections
  - Improved L/D ratios
  - Wider girder spacing
  - Better stability
  - Better durability

New Standard Drawings

- 24’, 28’, 30’, 38’, and 44’ Rdwy
- 0°, 15°, 30°, and 45° skews
- Spans 40’ to 125’
- Tx28 through Tx54

Implementation Schedule

Girder Type	Initial Letting
Tx46 and Tx62	Dec 2007
Tx28, Tx34, and Tx70	Sept 2008
Tx40 and Tx54	Sept 2010

Standard “Retirement”

Standard	Proposed Date	New Standard
24’ Rdwy, Ty IV	Jan 2009	Tx46
all Ty A, B, C	Oct 2009	Tx28 and Tx34
other Ty IV	Oct 2011	Tx54

Design with PSTRS14

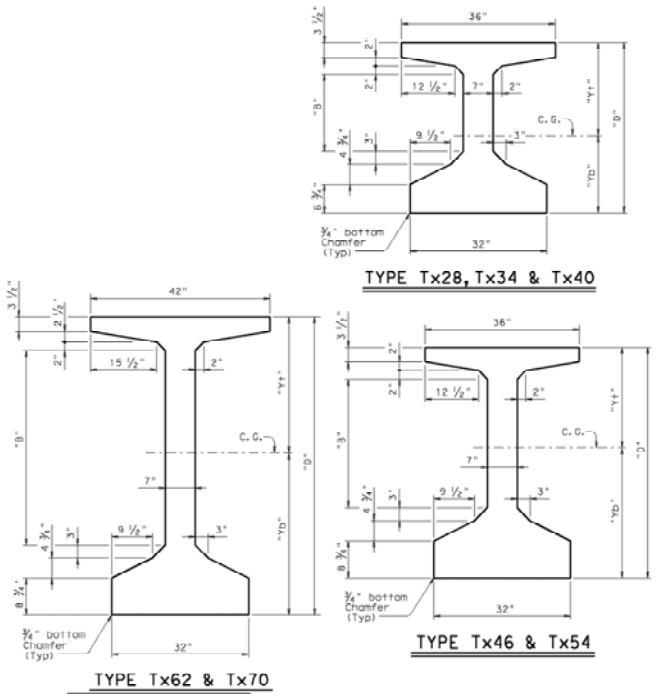

GIRDER DIMENSIONS AND SECTION PROPERTIES								
Girder Type	"D" (in.)	"B" (in.)	"Y+" (in.)	"Yb" (in.)	Area (in.²)	"Ix" (in.⁴)	"Iy" (in.⁴)	Weight (plf)
Tx28	28	6	15.02	12.98	586	62,772	40,559	610
Tx34	34	12	18.49	15.51	627	88,355	40,731	653
Tx40	40	18	21.90	18.10	669	134,990	40,902	697
Tx46	46	22	25.90	20.10	761	198,089	46,478	793
Tx54	54	30	30.49	23.51	817	299,740	46,707	851
Tx62	62	37 ½"	33.72	28.28	910	463,072	57,351	948
Tx70	70	45 ½"	38.09	31.91	966	628,747	57,579	1,006

Figure 14 – Standard TxGirder Cross Section Properties

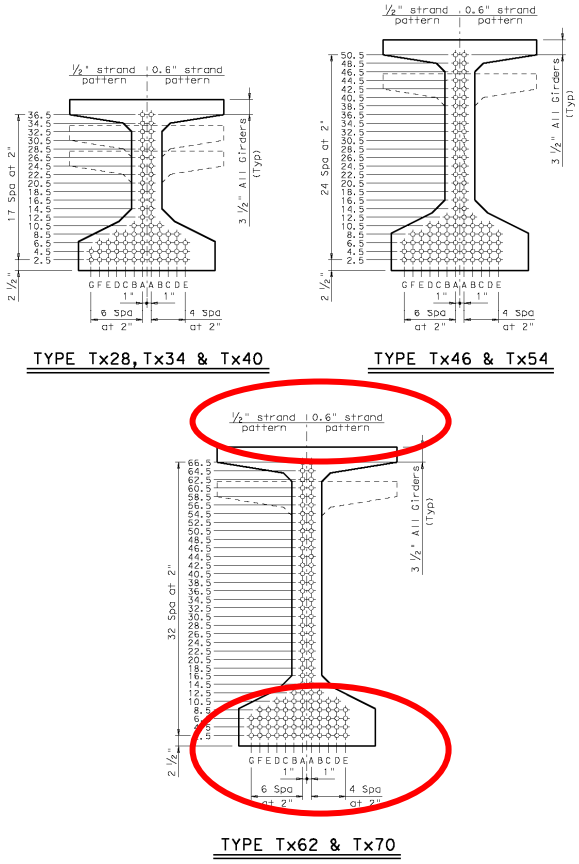

Figure 15 – Standard TxGirder Strand Layout

IGD - Girder Details

- Shear

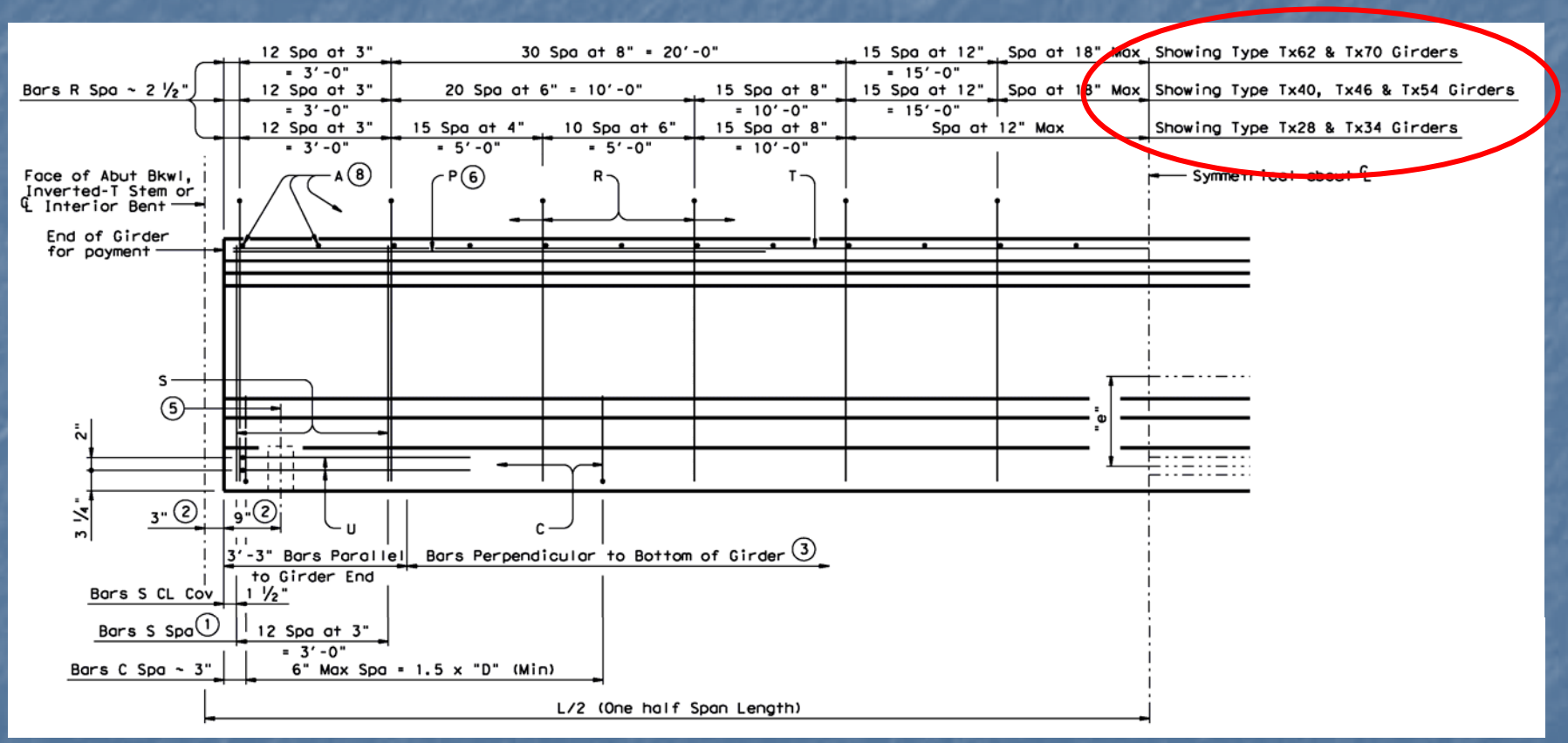

- No blockout for thickened slab

IGTS – Thickened Slab Details

- Min 2” haunch at CL bearing

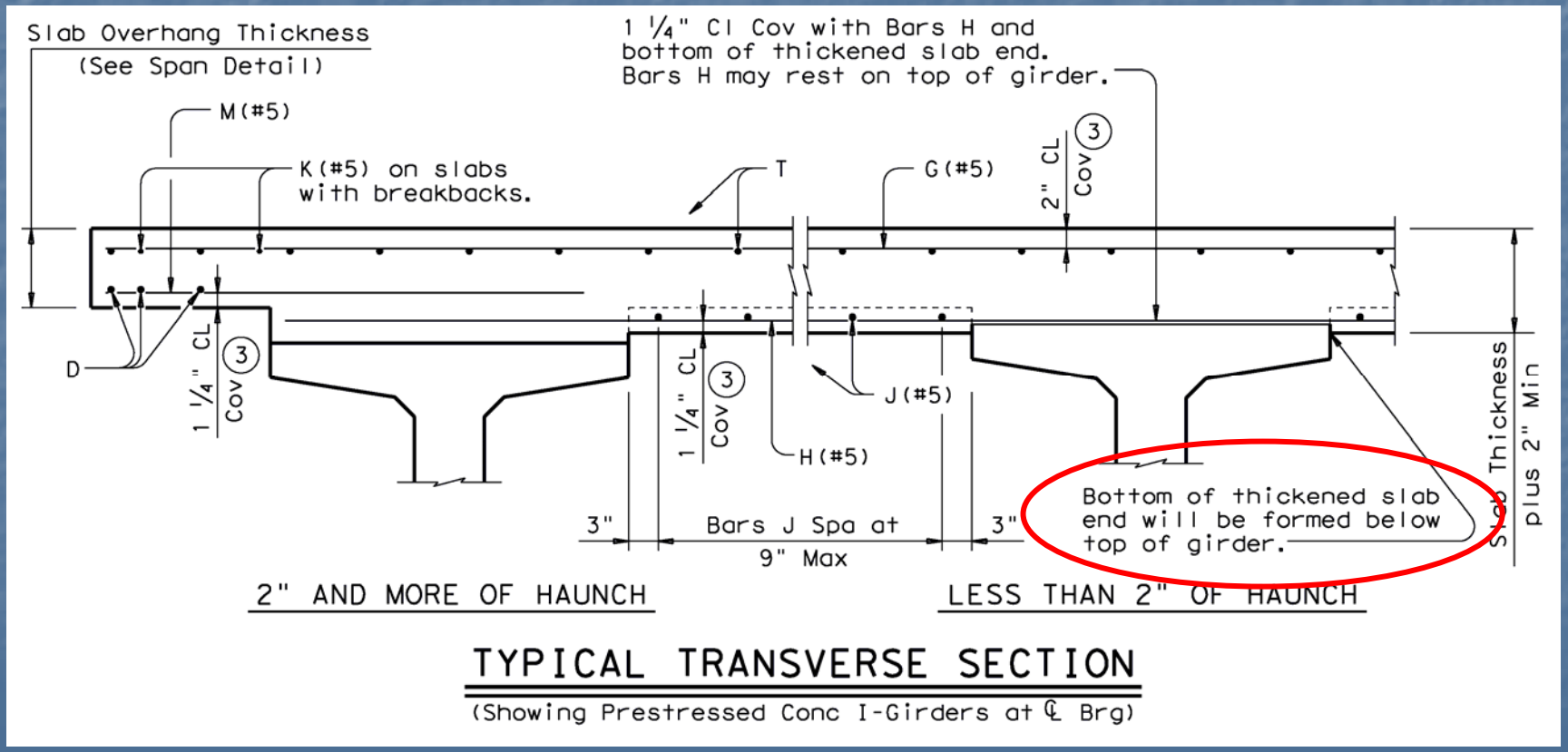

IGTS – Thickened Slab Details

- Tightened spacing of #5 bars

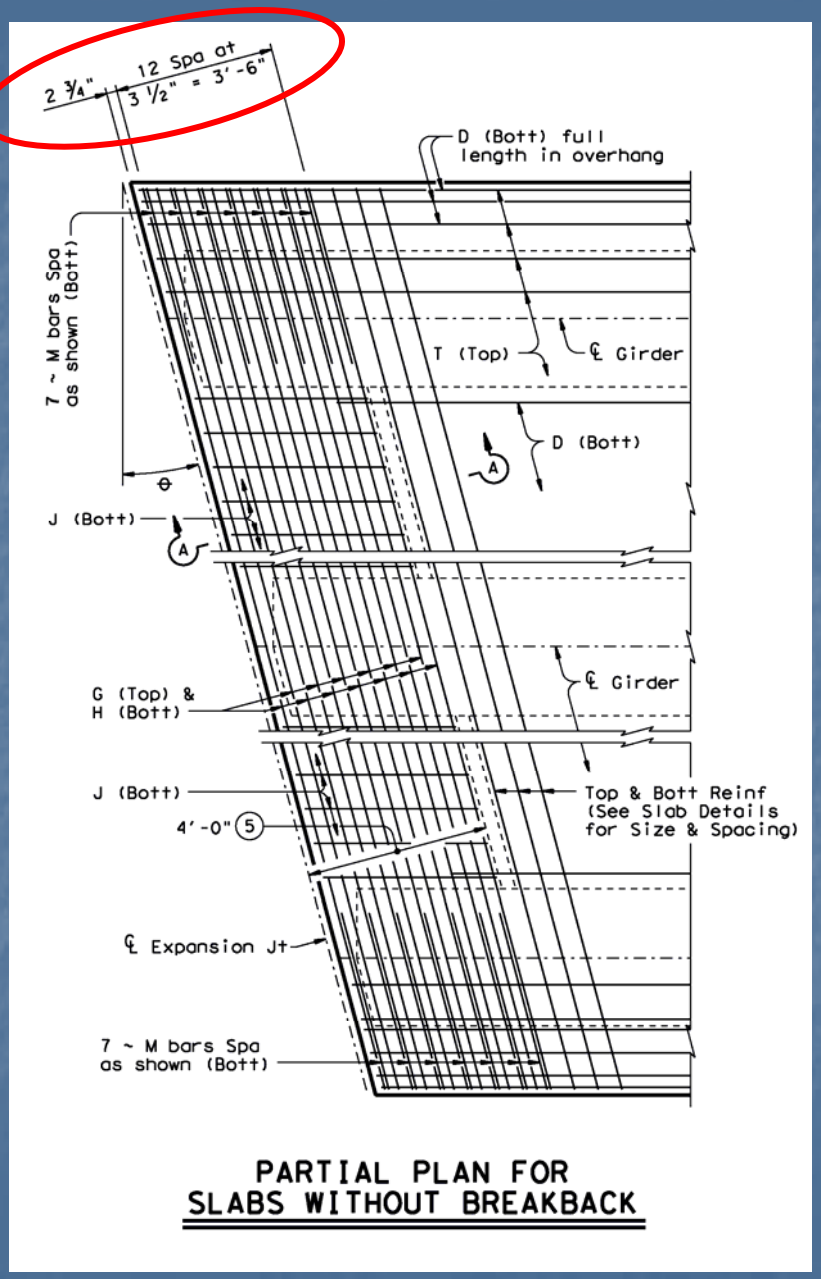

IGEB - Bearing Details

- Nominal CL 12” everywhere
- End offset 3” everywhere

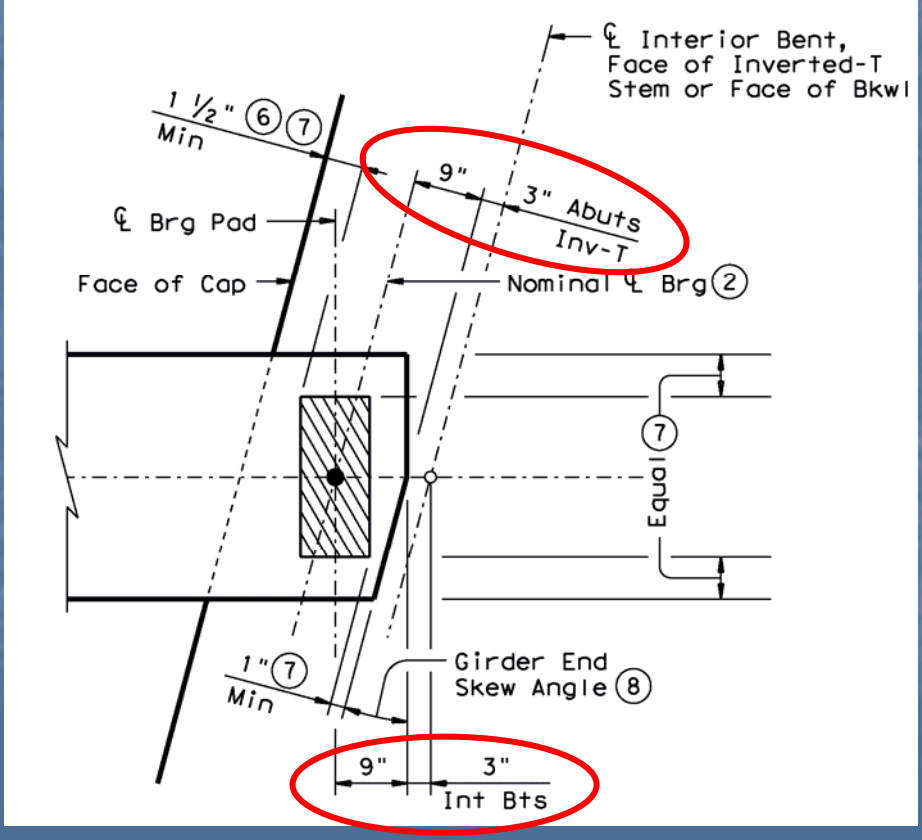

IGEB - Bearing Details

- Min substructure widths increased

New

TABLE OF MINIMUM SUBSTRUCTURE DIMENSIONS			
Girder Type	Abutments	Int Bents	Inv-T Bents
	Face of Bkwl to Face of Cap	Overall Cap Width	Corbel Width
Tx28 thru Tx54	1'-9"	3'-6"	1'-10 ½"
Tx62 & Tx70	2'-0"	4'-0"	2'-1 ½"

Old

TABLE OF MINIMUM SUBSTRUCTURE DIMENSIONS			
Beam Type	Abutments	Int Bents	Inv-T Bents
	Face of Bkwl to Face of Cap	Overall Cap Width	Corbel Width
A, B, & C	1'-4 ½"	2'-9"	1'-8"
IV	1'-7 ½"	3'-3"	1'-10"
VI	1'-10 ½"	3'-9"	2'-0"

IGMS – Misc Slab Details

- Overhang bracket note

DECK FORMWORK NOTES:
Overhang bracket hangers are limited to a safe working load of 4,000 lbs. applied to and along the axis of a coil rod at 45 degrees from vertical, regardless of higher loads permitted by hanger manufacturers. Space hangers accordingly.

4000 lb

4
G28 – 2 –MB3000

- IGND – Non-Standard Spans
- IGCS – Continuous Slab
- MEBR(C) – added TxGirders, added horizontal bracing detail

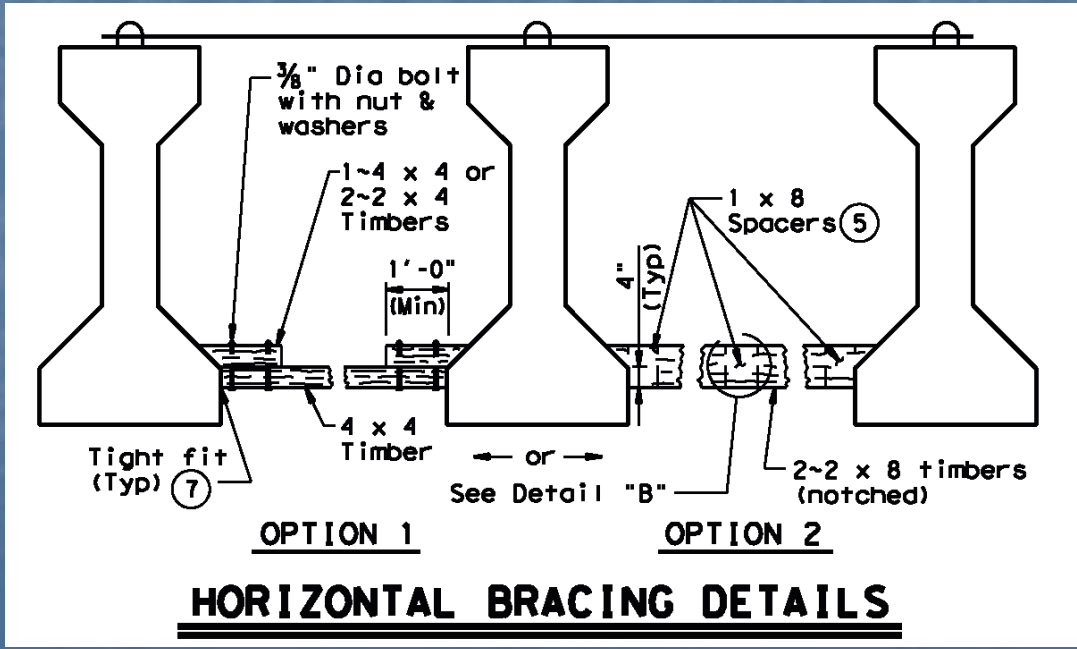

Abutments/Bents

- Max. abut foundation spacing 11’
- Bearing seat 3’-0”
- Column dia. 6” less than cap

Spans

- Standard 8” slab
- Overhang

Girder Type	Usual	Minimum
Tx28 - Tx54	3’	2’
Tx62 -Tx70	3.5’	2’

- Deck drains

Widenings

- Use TxGirders for all
- No diaphragm hole details included

Decked Slab Beam

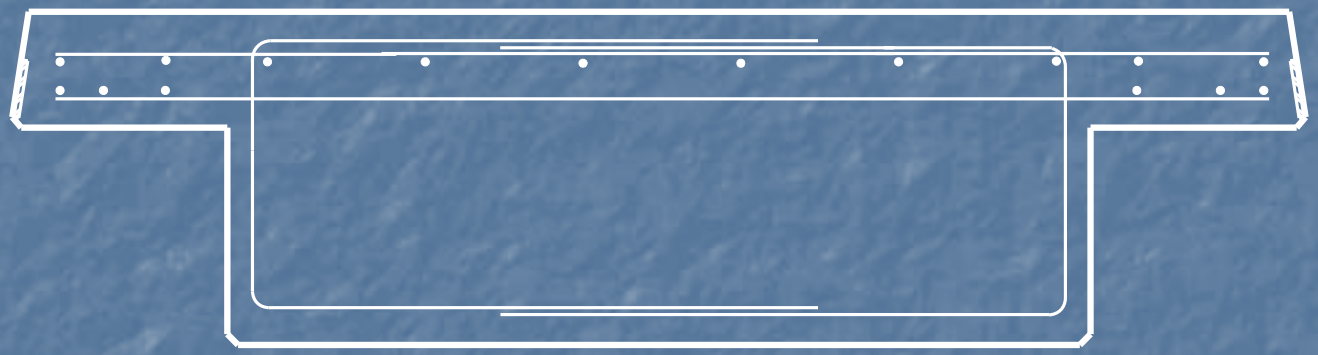

INTERIOR BEAM

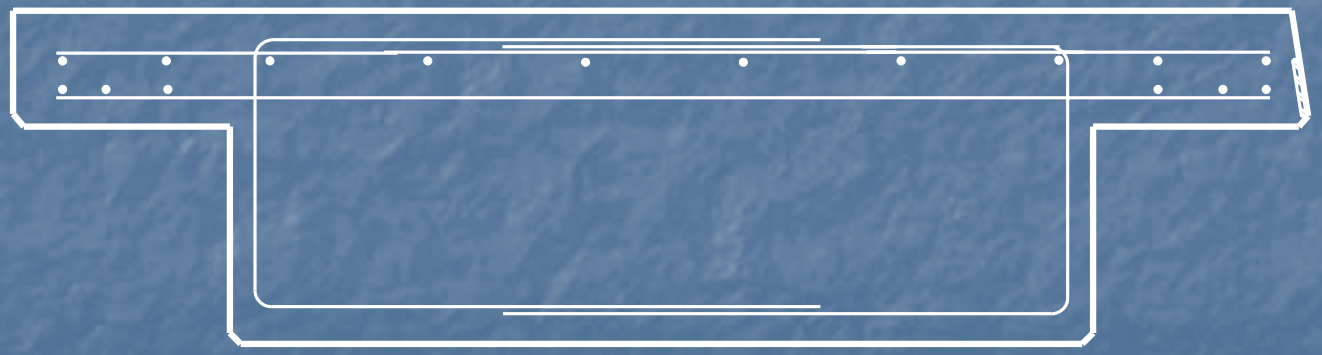

EXTERIOR BEAM

2006 PCI Design Award

Battleground Creek

Decked Slab Beam

- 2 depths
- 3 widths

BEAM DIMENSIONS			
Beam Type	"A"	"B"	"C"
6DS20	6'-5 3/4"	9"	1'-0"
7DS20	7'-5 3/4"	1'-3"	1'-0"
8DS20	7'-11 3/4"	1'-6"	1'-0"
6DS23	6'-5 3/4"	9"	1'-3"
7DS23	7'-5 3/4"	1'-3"	1'-3"
8DS23	7'-11 3/4"	1'-6"	1'-3"

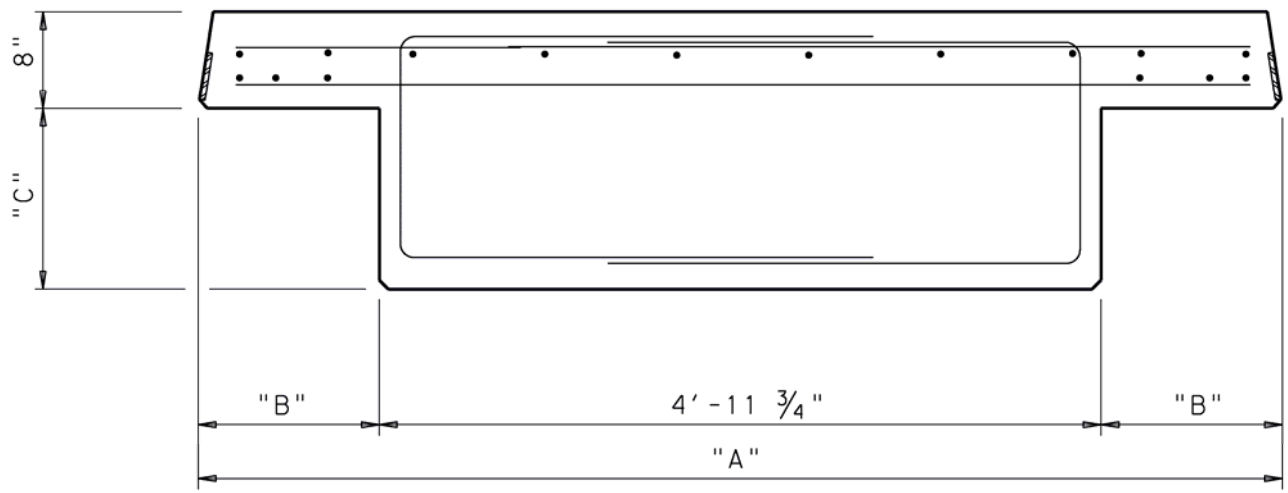

INTERIOR BEAM

Decked Slab Beam

- Benefits of the new sections
  - Reduce number of beams
  - Eliminate CIP concrete
  - Rapid installation
  - Shallow superstructure
  - On-system/off-system

Decked Slab Beam

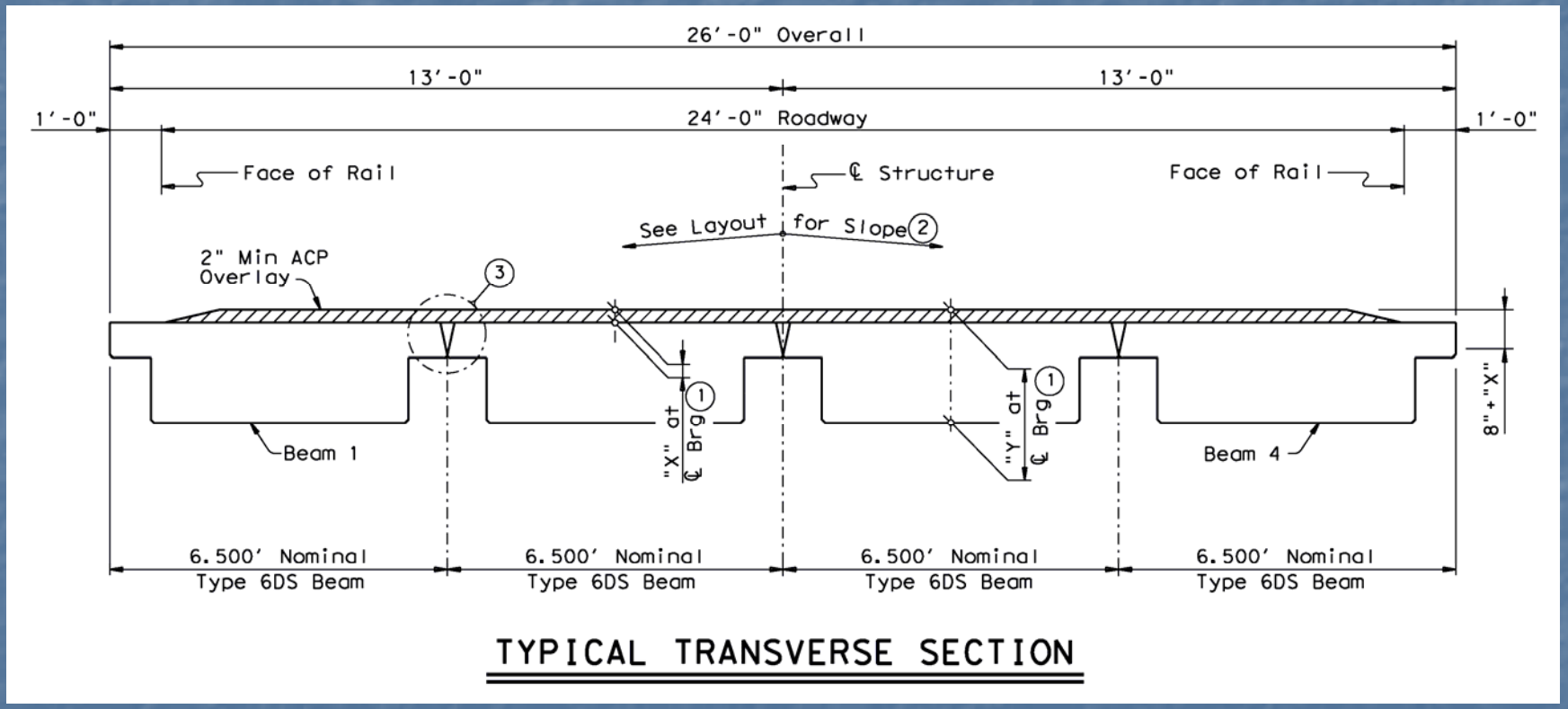

4 TRUCK

New Standard Drawings

- 24’ Rdwy
- 0°, 15°, and 30° skews
- Spans 30’ to 60’
- 6DS20 and 6DS23

BDSB – Bent Details

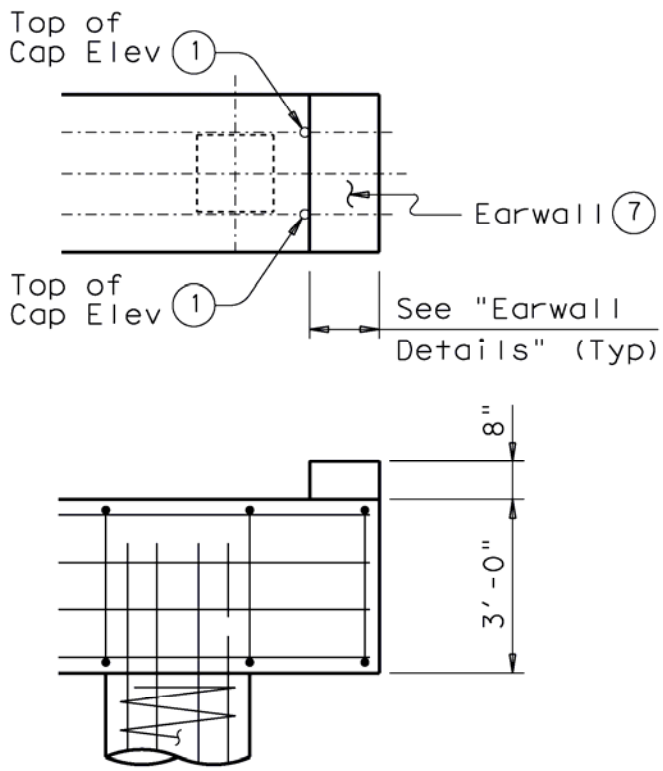

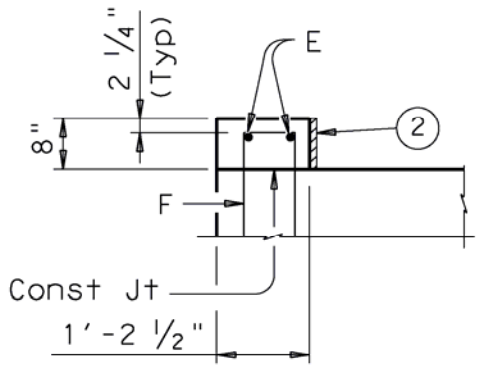

ELEVATION

EARWALL DETAIL 7

7 Do not cast earwalls until beams are erected in their final position.

ADSB – Abut Details

- Backwall height not based on “y”
- Always fixed dimension

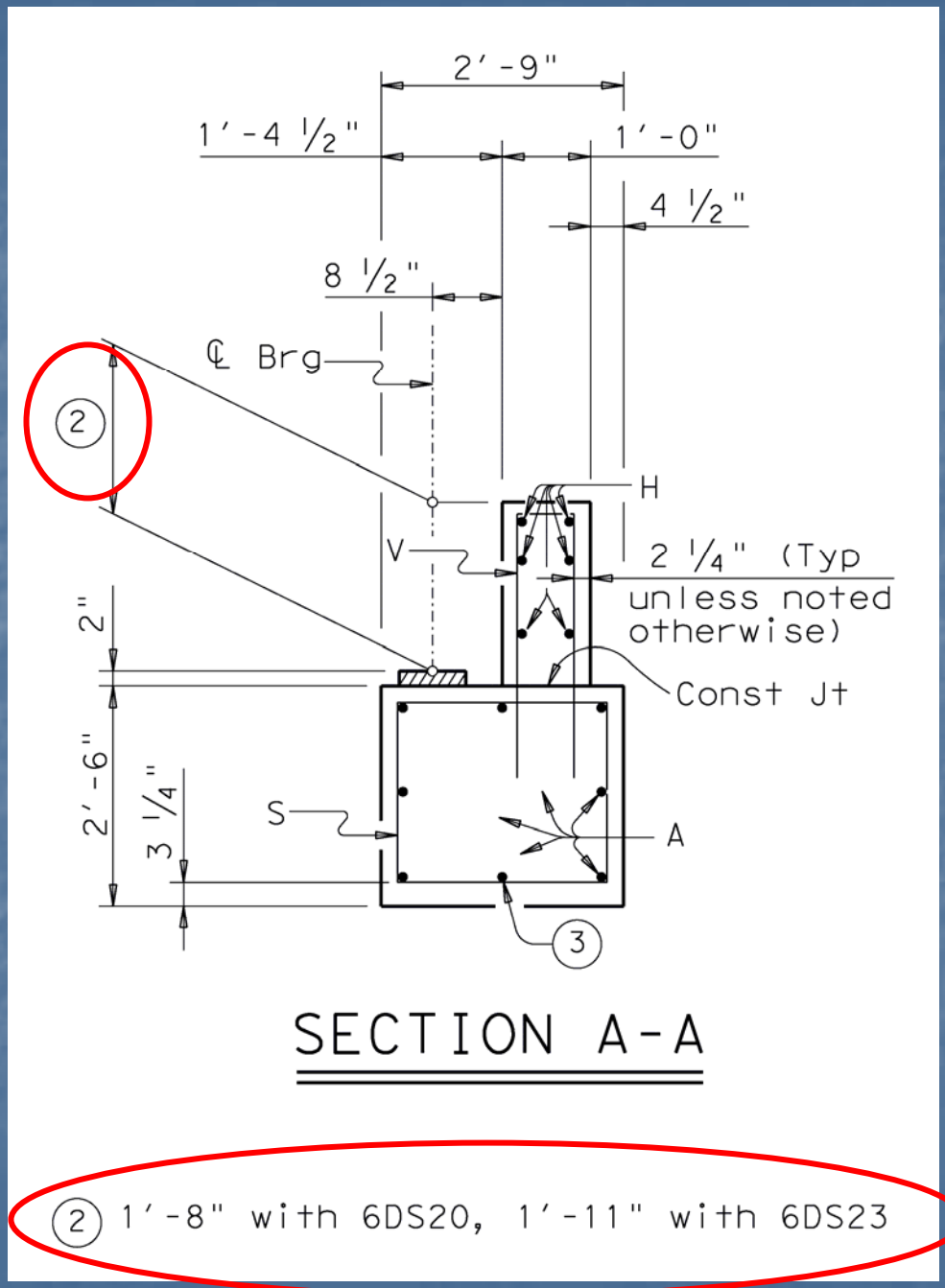

SDSB – Span Details

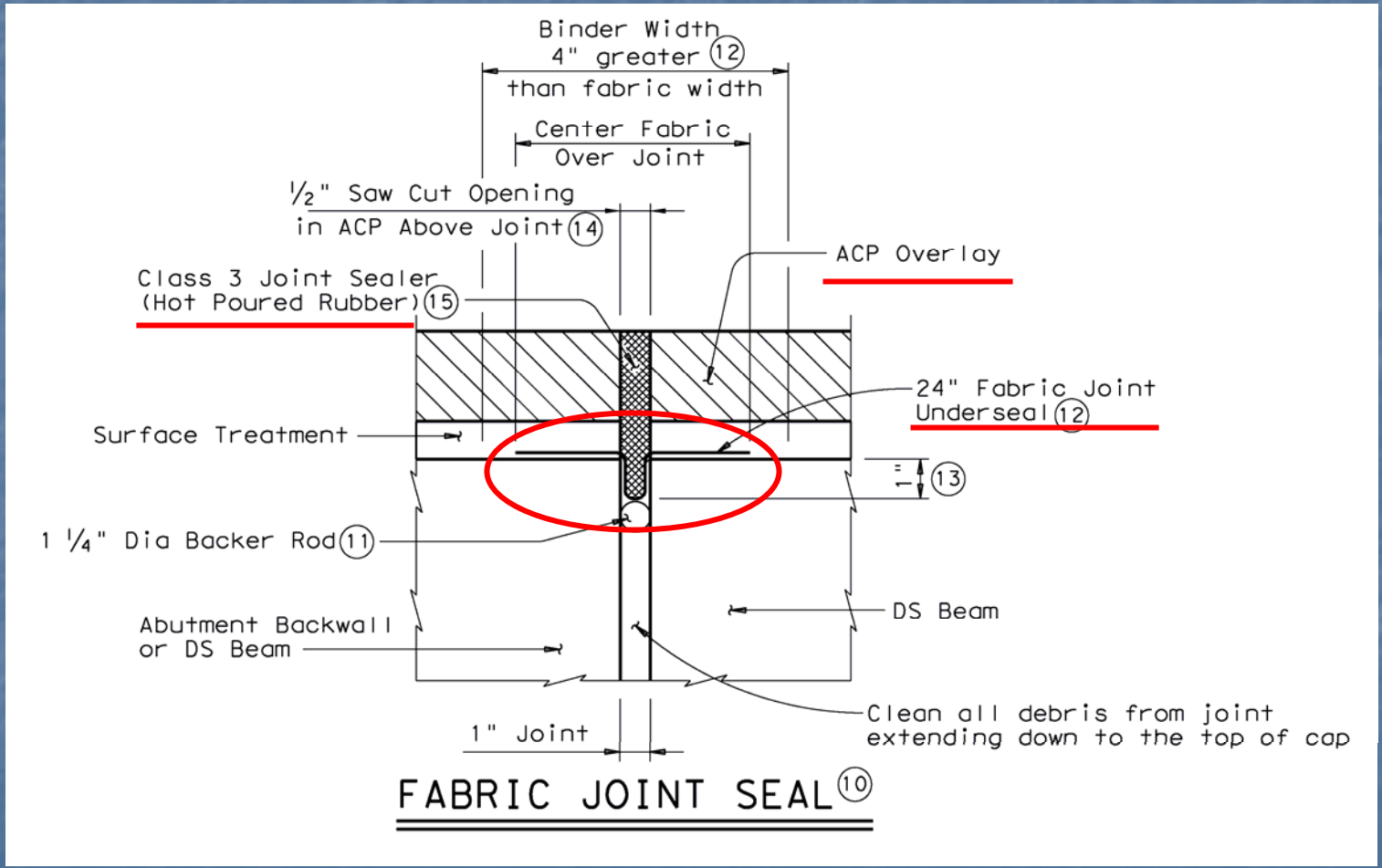

SDSB – Span Details

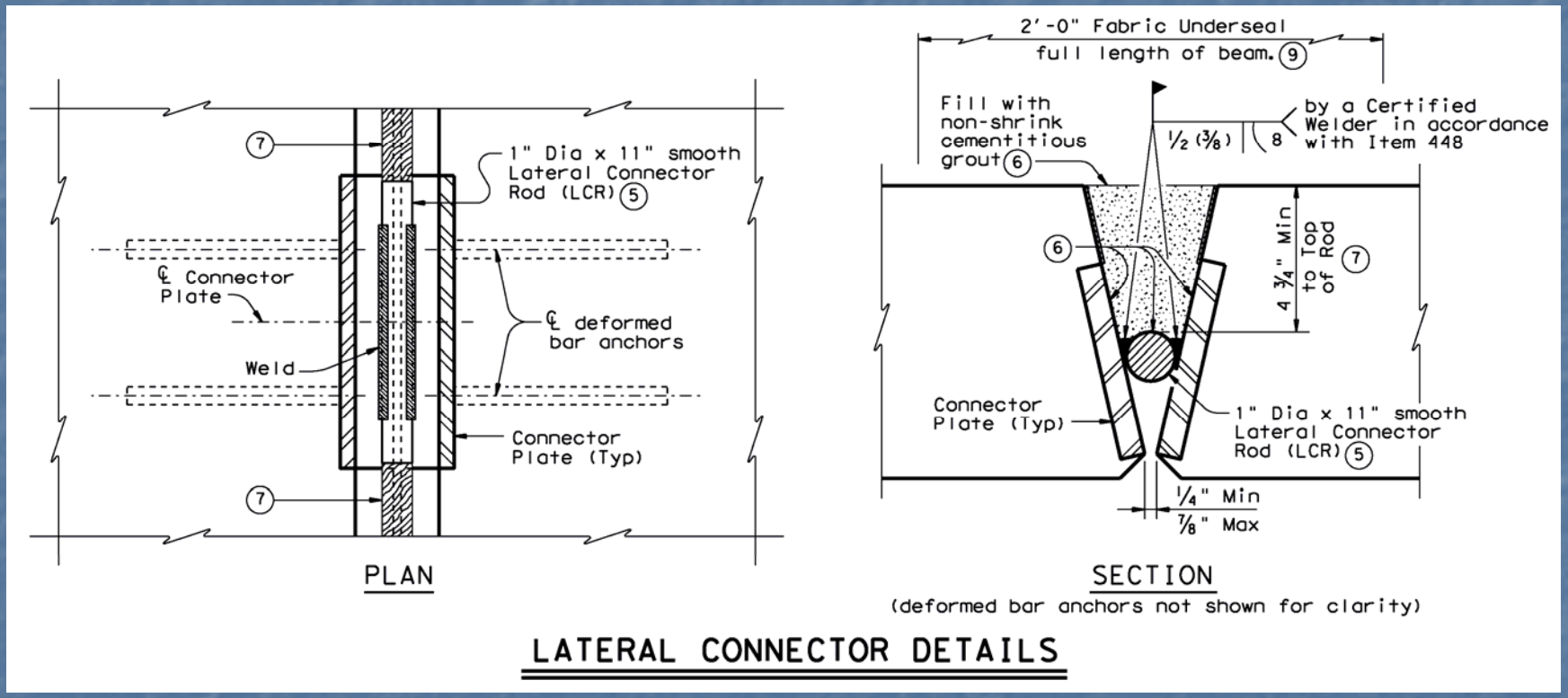

DSBRA – Rail Details

DSBRA – Rail Details

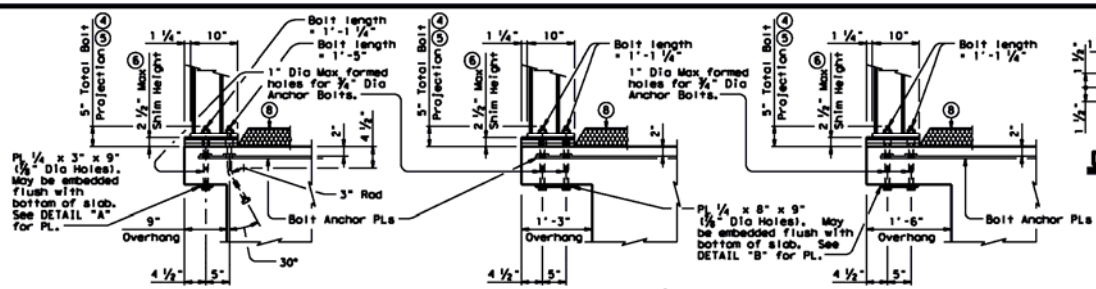

T101 RAILS⑦

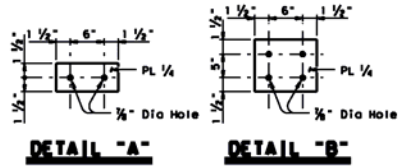

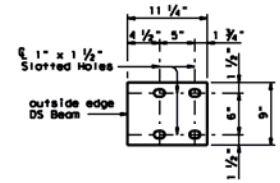

T101 RAIL STEEL SHIMS
(Shim thickness will be ¼" or ¾" Plate (ASTM-A36) only, provided by the contractor).

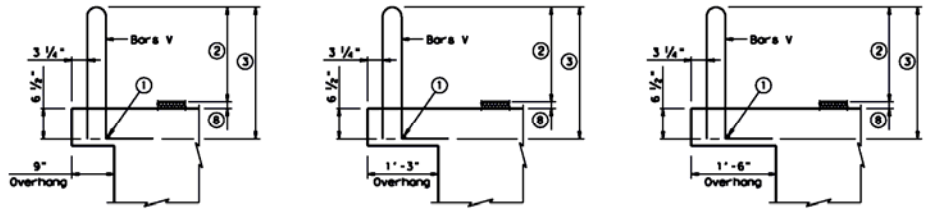

T203 & C203 RAILS

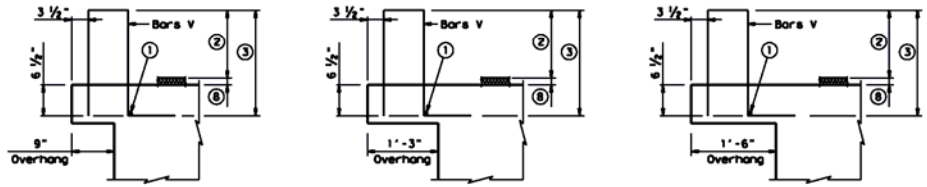

T401, T402 & C402 RAILS

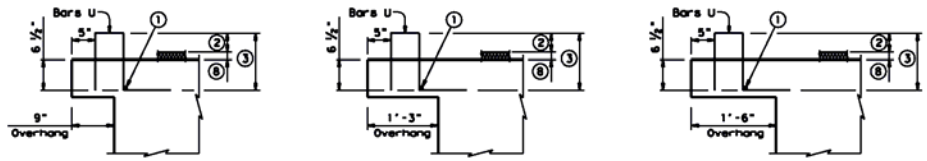

T411 & C411 RAILS

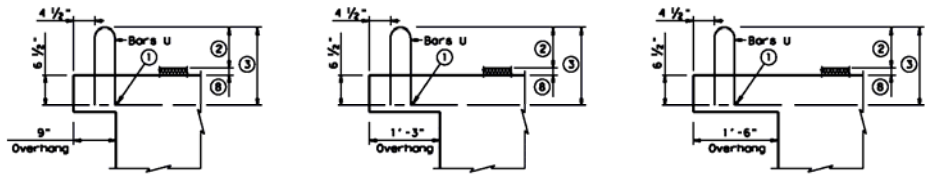

T221, T501, T502, C221, B221, C501, C502 & SSTR RAILS

TYPICAL ANCHORAGE PLACEMENT

① Place additional #4 longitudinal bar. Bar embedded in beams will be provided by the beam fabricator, included as part of railing reinforcement. Bar shown is required to control alignment of rail anchorage steel. Bar shown may be placed outside of beam at the fabricators option and removed prior to shipping.

② See Rail standard for projection from Finish Grade.

③ Bar length shown on rail standard, increased 2" for overlay (varies due to beam camber). On bridges with significant haunch variable length rail anchor bars U or V may be required to maintain adequate projection into rail. See optional rail anchorage details for some rails that offer optional anchorage with a constant bar length.

④ Bolts, nuts, washers and plate that rest on bolt head will be provided by the beam fabricator. Bolt will have a minimum thread length of 5 ½".

⑤ Excess bolt length has been provided to accommodate a variable overlay thickness due to beam camber. If overlay thickness on span details exceeds 4 ½", bolt length and shim height shall be increased accordingly. After posts have been set and bolts tightened, bolt projection above nuts of more than ½" must be cut off and painted with zinc-rich paint.

⑥ Total shim height varies from 0" to 2 ½" Max. Where 2 course surface treatment and ACP overlay thickness is greater than 2", the Contractor will provide and place steel shims under the post base plate to maintain uniform required rail height above riding surface. Combinations of ¼" and ¾" shims must be maximized to reduce the number of shims used at a given location. Example: 2 course surface treatment and ACP overlay thickness at a post = 3 ½". Therefore 2 ½" minus 2" (post height increase for 2 course surface treatment and ACP overlay, see rail standard) = ½". Use: 2 - ¼" shims.

⑦ The top surface on exterior beams will be steel trowelled under rail posts. Distance from end of top edge of beam to center of first anchor bolt group must not ever get less than 8", except:
15° skew: 1'-5" (acute corner only)
30° skew: 2'-6" (acute corner only)

⑧ Two course surface treatment and ACP overlay thickness varies due to beam camber (2" minimum).

DISCLAIMER:
The use of this standard is governed by the "Texas Engineering Practice Act". The work product of a registered professional engineer is required. TxDOT assumes no responsibility for the conversion of this standard to other formats or for incorrect results or damages resulting from its use.

SHEET 1 OF 2

Texas Department of Transportation
Bridge Division

RAIL ANCHORAGE DETAILS
PRESTR CONCRETE DS BEAM

DSBRA

FILE: dsbrrails.dgn	DN: AEE	CK: TxDOT	DW: JTR	CK: TxDOT
©TxDOT	DISTRICT	FEDERAL AID PROJECT		SHEET
REVISIONS	COUNTY	CONTROL	SECT	JOB	HIGHWAY

“Things to AVOID”

- Horizontal curve
- Change in cross-slope
- Skew w/ vertical curve

“Things to AVOID”

- Skipping ACP topping

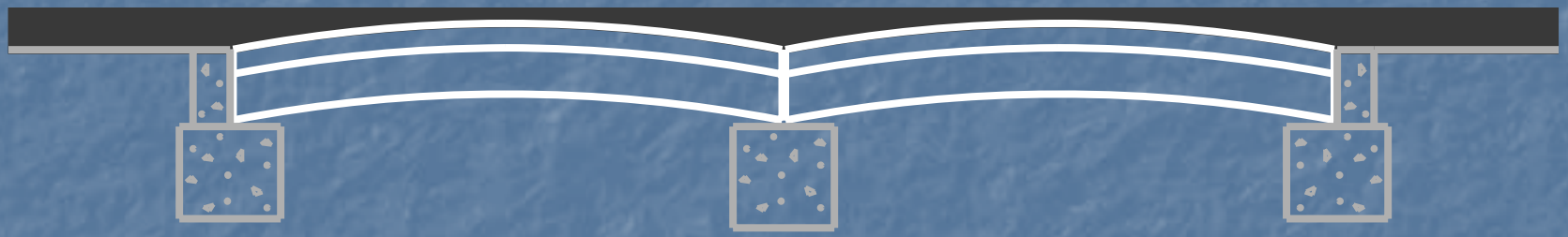

Simple Geometry

Wrap-up

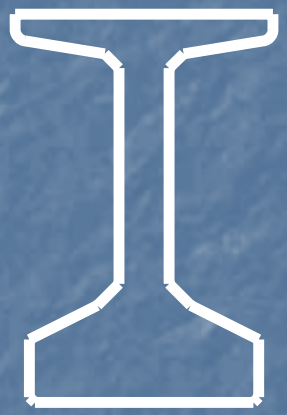

Begin using NOW

Improved span, spacing

New design parameters

Coming soon

Great for short, simple crossings

Questions ? ?

- Amy Eskridge, P.E.
  - aeskrid@dot.state.tx.us
  - (512) 416-2261