Structural Element Erection Bracing

2007 Design & Bridge Conference

Corpus Christi, Texas

Lewis Gamboa, P.E.

(BRG) Field Operations

Construction & Maintenance

Overview

- Temporary Structures
  - Bracing
  - Shoring
- Authority and Liabilities regarding contractor's safety critical work
  - Items 5 and 441
    - TxDOT Engineers
    - TxDOT Inspectors
- Resources
  - Design Manuals
    - TxDOT
    - ASSHTO
  - Standards
  - BRG Division

Topics

- Concrete
  - Prestress “I”-Beams
    - Types (All)
  - Prestress “U”- Beams
    - Types U
- Structural Steel
  - Rolled “W” Shape
    - W18 thru W40
  - * Plate Girders “I” - Section

Why?

Safety Concerns

- Public

On the roadway.

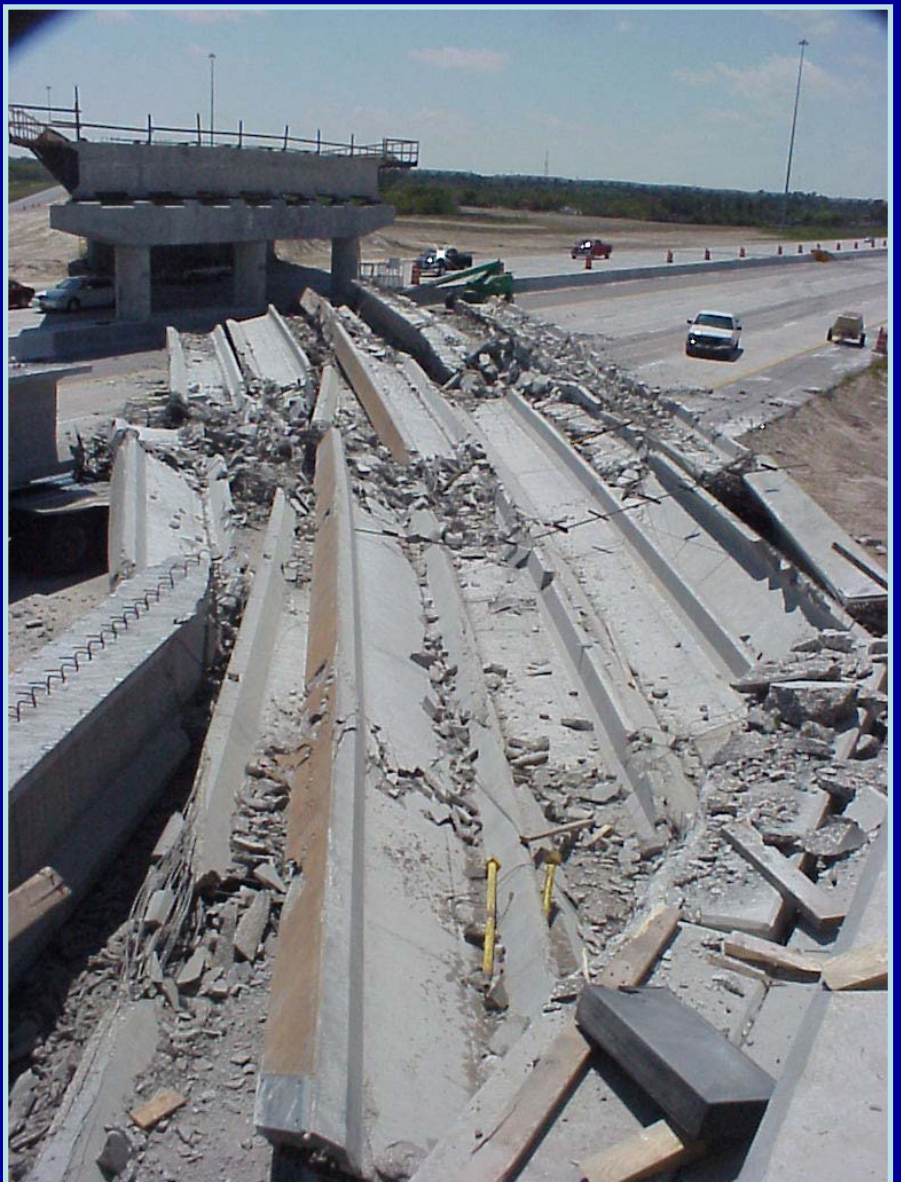

Safety Concerns

- Workers (TxDOT & Contractor)

On the job.

Safety Concerns

- Workers (TxDOT & Contractor)

Safety Concerns

- Workers (TxDOT & Contractor)

Concrete Beams

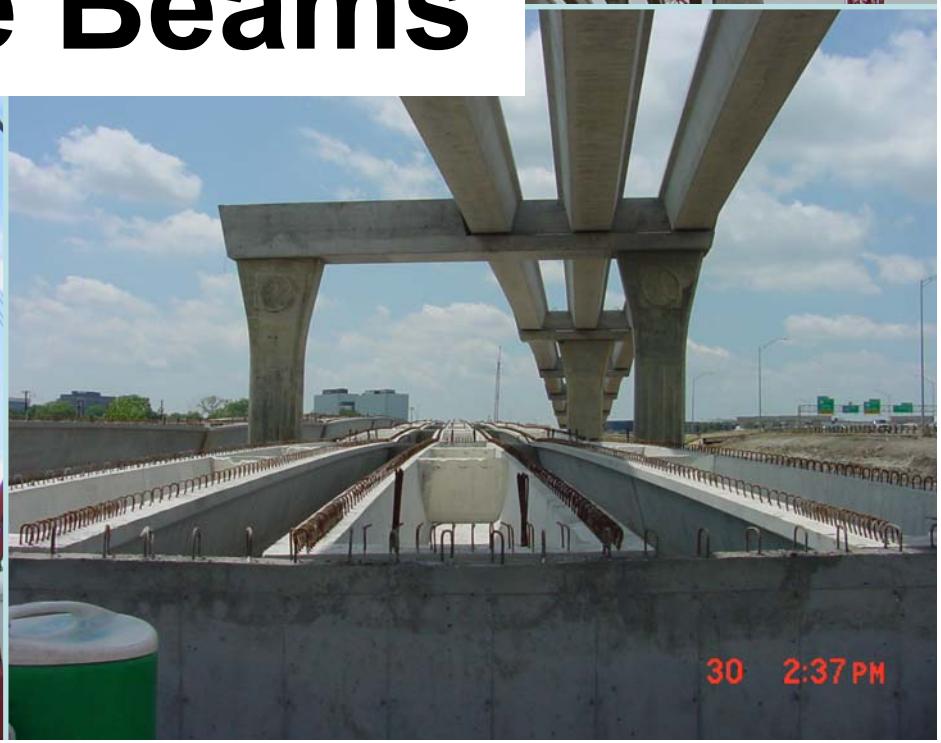

Concrete Beams

- MEBR (C) Standard
  - Prestress Concrete “I”-Beams
    - Types A, B, C, IV, 72, Tx 28 thru Tx 70
    - Type A, B issues
- MEBR (U) Standard
  - Prestress Concrete “U”- Beams
    - Types U

Jan. 2005

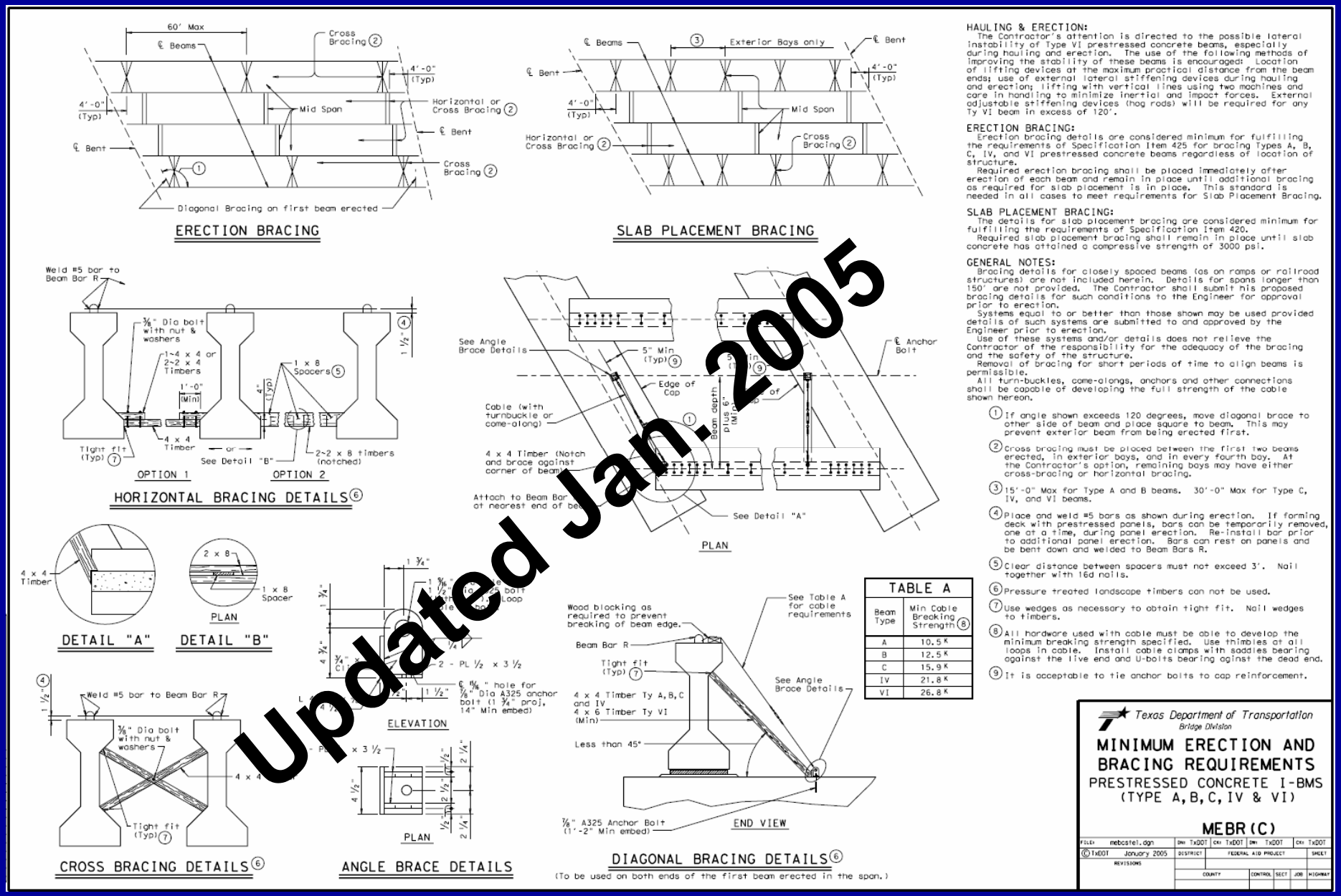

TABLE A	
Beam Type	Min Cable Breaking Strength 8
A	10.5 K
B	12.5 K
C	15.9 K
IV	21.8 K
VI	26.8 K

Updated Jan. 2005

Typical Bracing

- 1998 Standard

1998 Standard

Prestressed “U”- Beams

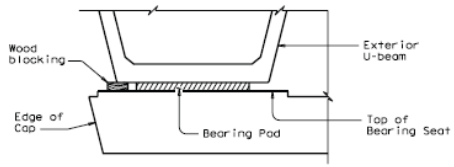

MINIMUM BLOCKING OF EXTERIOR U-BEAM

Required minimum blocking of exterior U-beam must be in place before pouring slab concrete. Leave blocking in place for at least 4 days after slab is cast and afterwards remove at the Contractor's convenience.

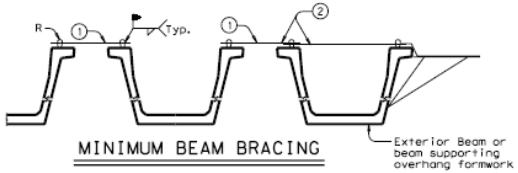

MINIMUM BEAM BRACING

(1) Weld two #5 bars at each end of each beam to bars R between all U-Beams immediately after erection. This reinforcement is in addition to that shown for the thickened slab end. This must be in place prior to placing any precast deck panels.

(2) Weld #5 bars at 15' Max spacing along exterior beam and exterior bay after precast deck panels have been placed and prior to placing overhang formwork. This reinforcement is in addition to that shown for the concrete slab.

GENERAL NOTES:

Systems equal to or better than those shown may be used provided details of such systems are submitted to and approved by the Engineer prior to erection.

Use of these systems and/or details does not relieve the Contractor of the responsibility for the adequacy of the bracing and the safety of the structure.

Texas Department of Transportation
Bridge Division

MINIMUM ERECTION AND BRACING REQUIREMENTS
PRESTR CONC U-BEAM SPANS

MEBR(U)

FILE: ubstde06.dgn	DWN TxDOT	CKD TxDOT	DWN TxDOT	CKD TxDOT	
©TxDOT July 2006	DISTRICT	FEDERAL AID PROJECT		SHEET	
REVISIONS					
	COUNTY		CONTROL	SECT	JOB	HIGHWAY

Short Span Bridges

- Short Span
  - Type A or B

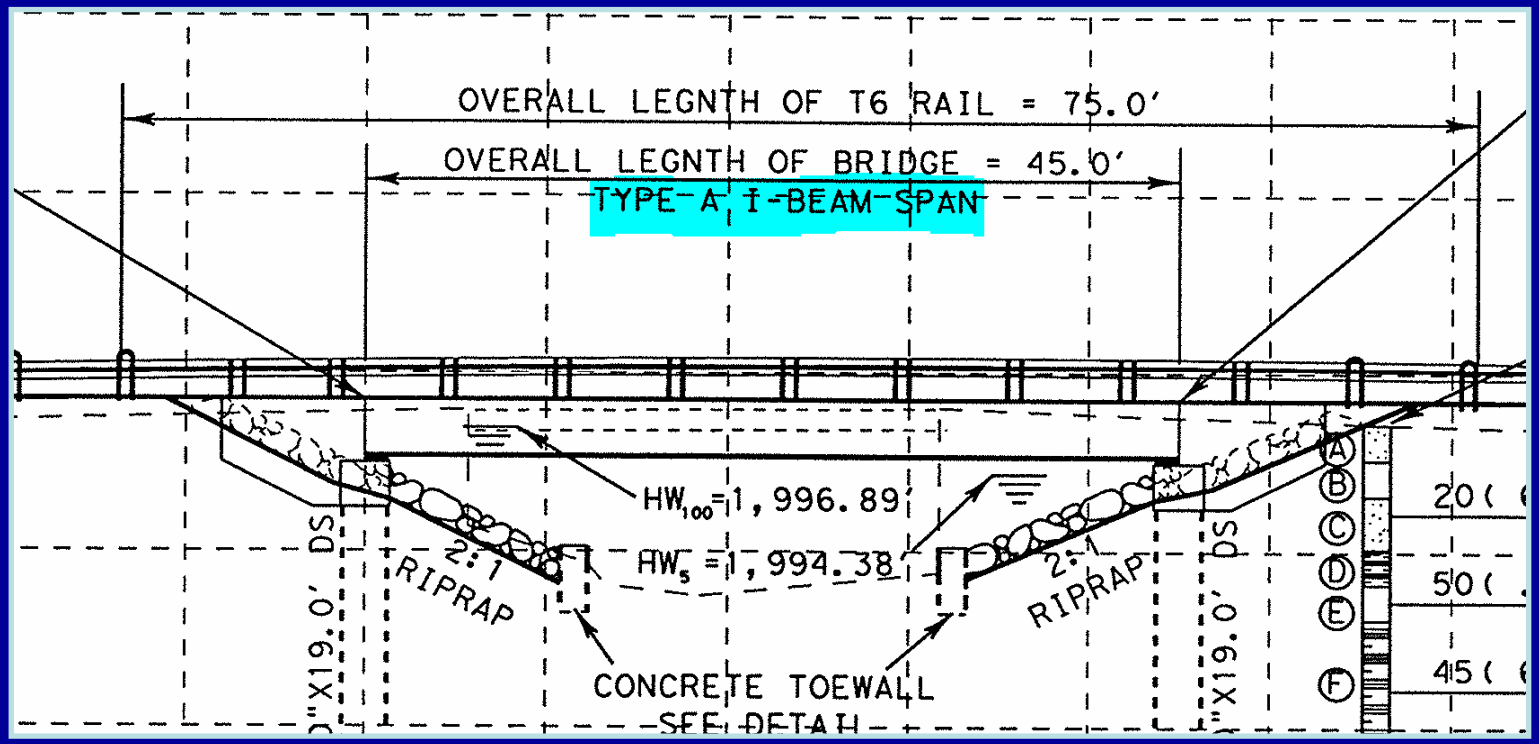

Short Span Bridges

- 3’ Overhang Typ.

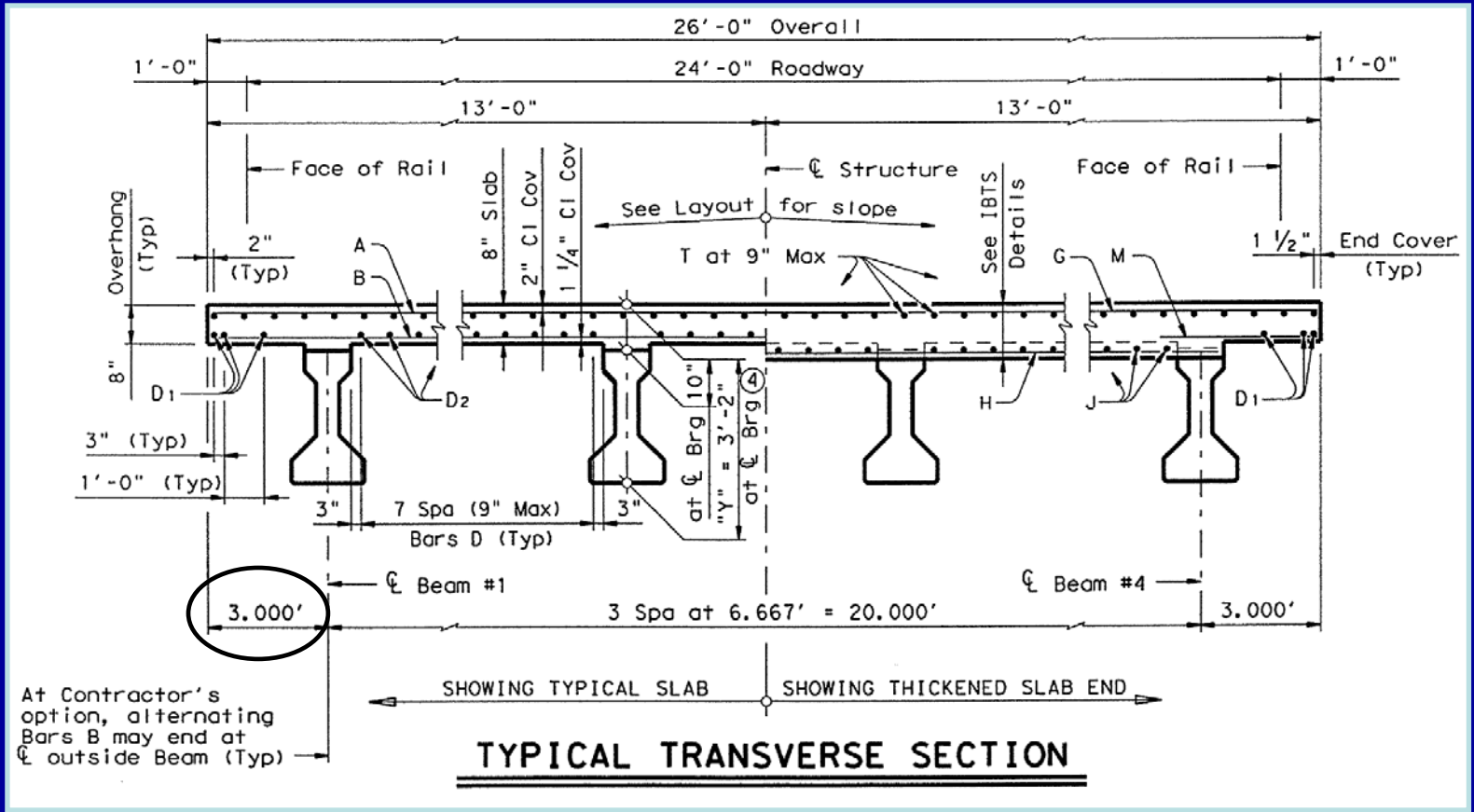

Type “IV” Beam

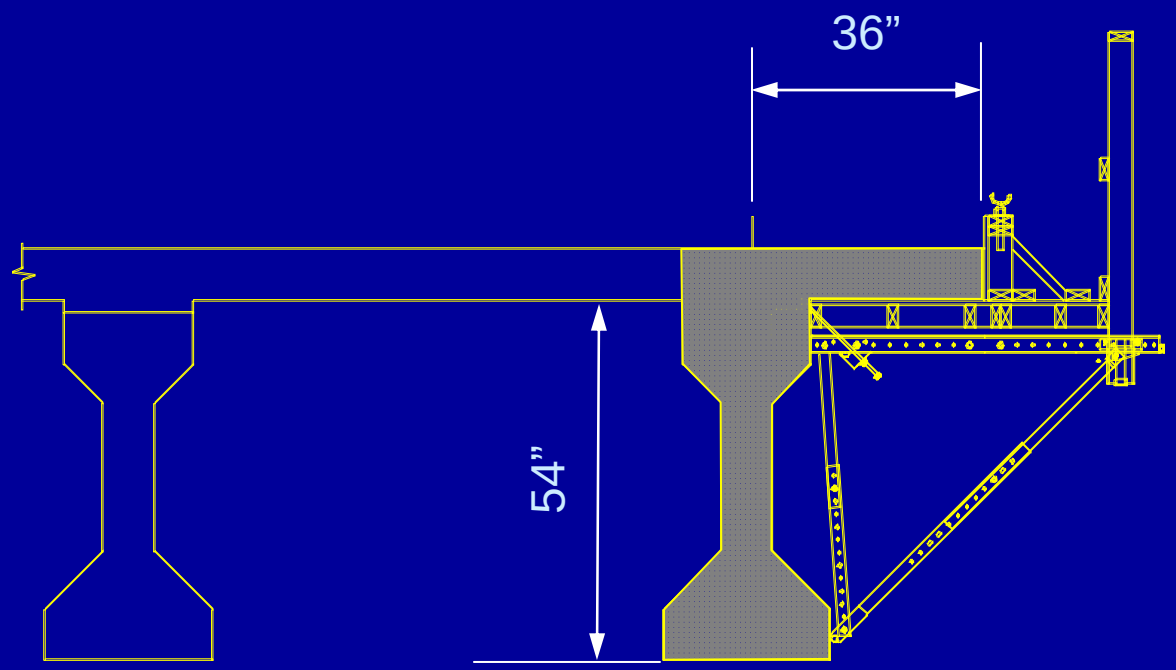

Type “A” Beam

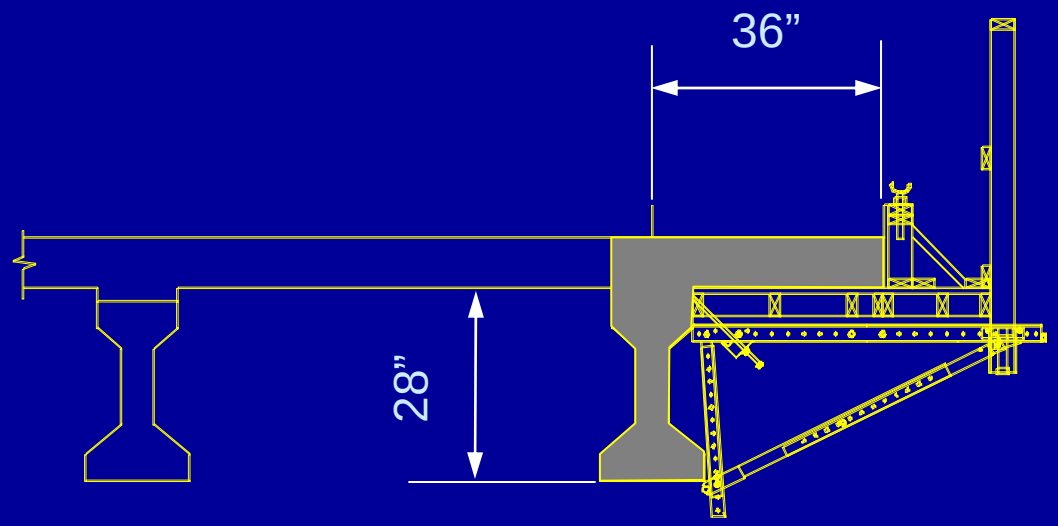

Before Deck Placement

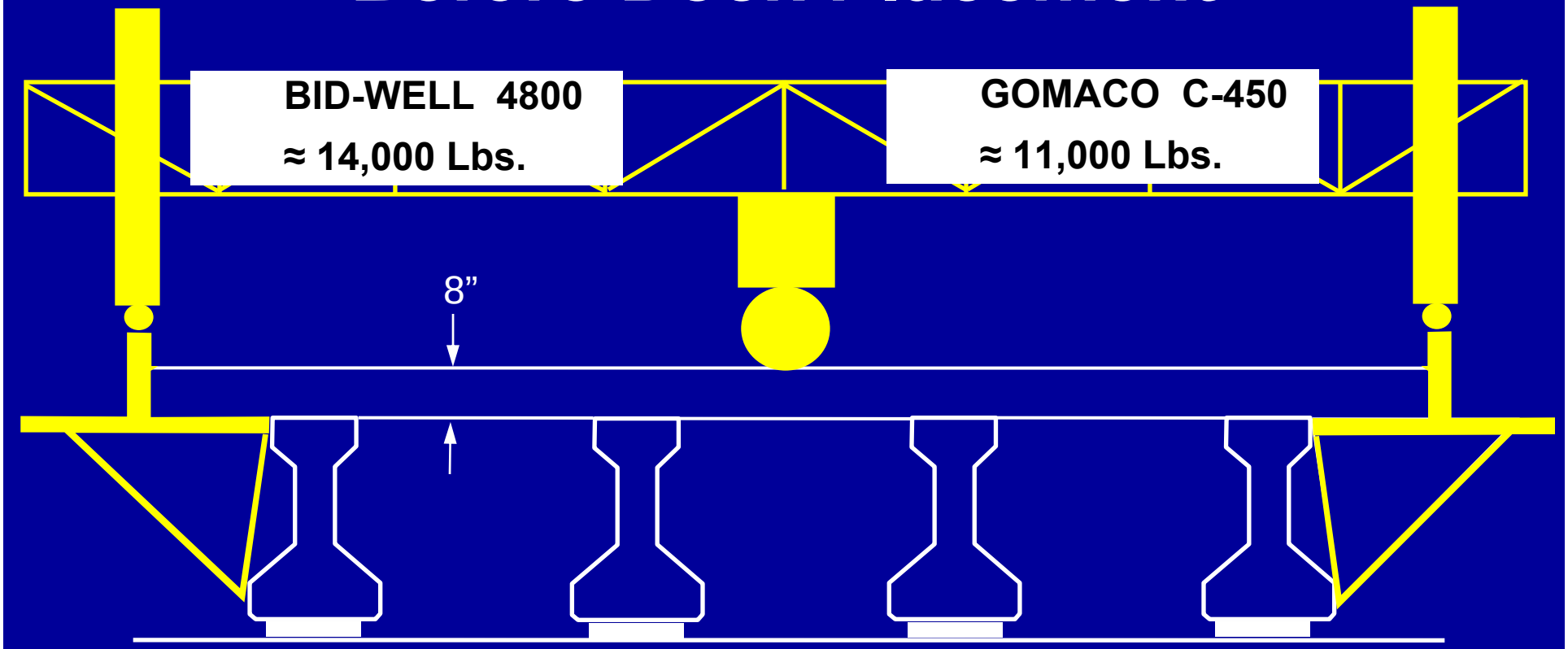

After Deck Placement

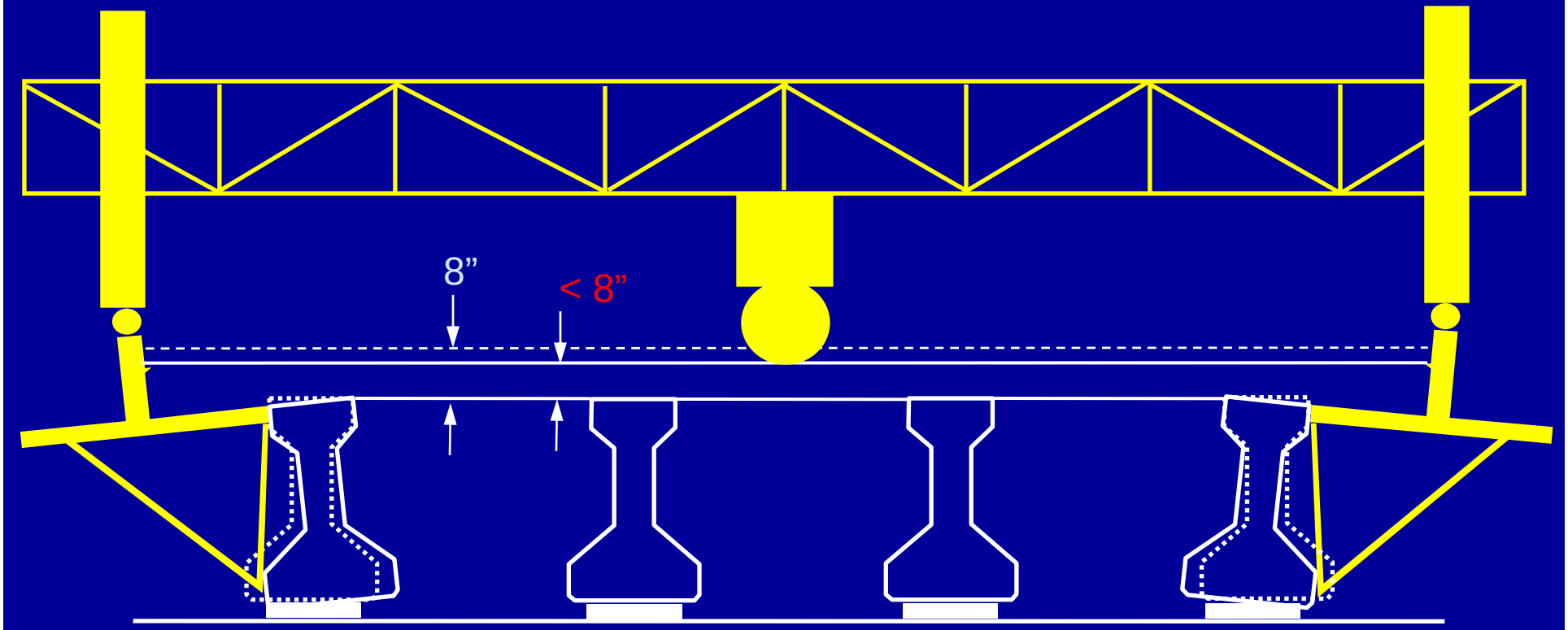

Beam Rotation

Beam Rotation

Beam Rotation

MEBR (C) (Rev. 6-2007)

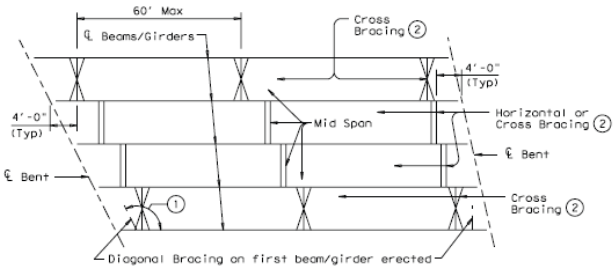

ERECTION BRACING

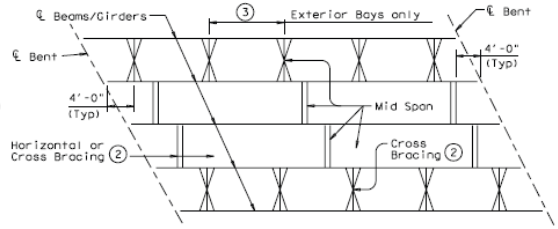

SLAB PLACEMENT BRACING

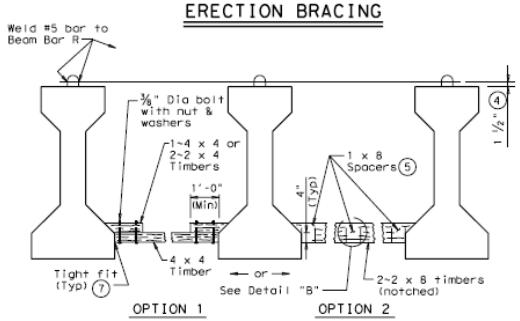

HORIZONTAL BRACING DETAILS (6)

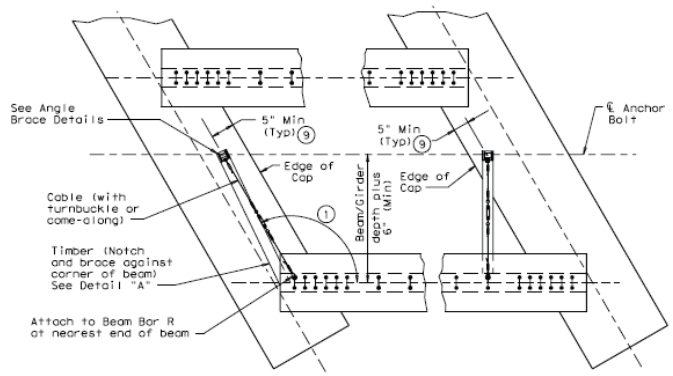

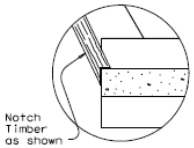

DETAIL "A"

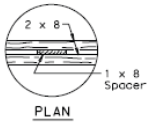

DETAIL "B"

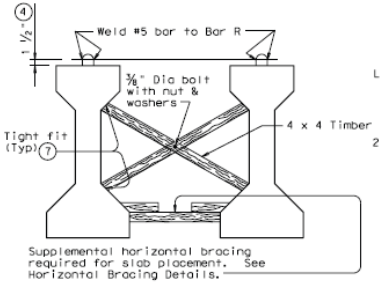

CROSS BRACING DETAIL (6)

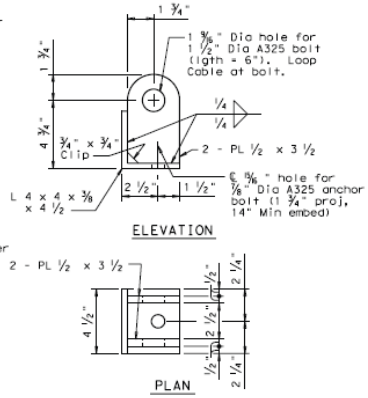

ANGLE BRACE DETAILS

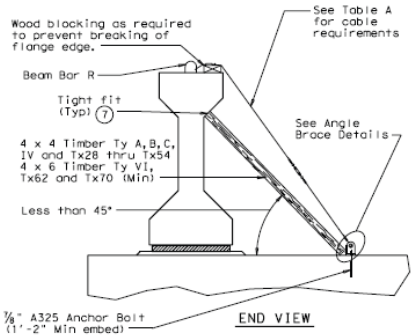

DIAGONAL BRACING DETAILS (6)

(To be used on both ends of the first beam/girder erected in the span.)

TABLE A	
Girder /Beam Type	Min Cable Breaking Strength (8)
A	10.5 K
B	12.5 K
C	15.9 K
IV	21.8 K
VI	26.8 K
Tx28	18.9 K
Tx34	21.6 K
Tx40	23.1 K
Tx46	24.5 K
Tx54	26.2 K
Tx62	27.9 K
Tx70	27.9 K

HAULING & ERECTION:
The Contractor's attention is directed to the possible lateral instability of prestressed concrete beams and girders over 130' long, especially during hauling and erection. The use of the following methods to improve stability is encouraged: Locate lifting devices at the maximum practical distance from beam ends; use external lateral stiffening devices during hauling and erection; lift with vertical lines using two machines; and take care in handling to minimize inertial and impact forces.

ERECTION BRACING:
Erection bracing details shown are considered the minimum for fulfilling the bracing requirements of Item 425.
Required erection bracing must be placed immediately after erection of each beam and remain in place until additional bracing as required for slab placement is in place. This standard is needed in all cases to meet requirements for Slab Placement Bracing.

SLAB PLACEMENT BRACING:
The details for slab placement bracing are considered minimum for fulfilling the requirements of Specification Item 420.
Required slab placement bracing must remain in place until slab concrete has attained a compressive strength of 3000 psi.

GENERAL NOTES:
Bracing details for closely spaced beams and girders (as on ramps or railroad structures) are not included. Details for spans longer than 150' are not provided. The Contractor must submit his proposed bracing details for such conditions to the Engineer for approval prior to erection.
Systems equal to or better than those shown may be used provided details of such systems are submitted to and approved by the Engineer prior to erection.
Use of these systems and/or details does not relieve the Contractor of the responsibility for the adequacy of the bracing and the safety of the structure.
Removal of bracing for short periods of time to align beams and girders is permissible.
All turn-buckles, come-alongs, anchors and other connections must be capable of developing the full strength of the cable shown.

(1) If angle shown exceeds 120 degrees, move diagonal brace to other side of beam/girder and place square to beam/girder. This may prevent exterior beam from being erected first.

(2) Cross bracing must be placed between the first two beams/girders erected, in exterior bays, and in every fourth bay. At the Contractor's option, remaining bays may have either cross-bracing or horizontal bracing.

(3) 15'-0" Max for Type A, B beams and Tx28 and Tx34 girders. 30'-0" Max for all others.

(4) Place and weld #5 bars as shown during erection. If forming deck with prestressed panels, bars can be temporarily removed, one at a time, during panel erection. Re-install bar prior to additional panel erection. Bars can rest on panels and be bent down and welded to Beam Bars R.

(5) Clear distance between spacers must not exceed 3'. Nail together with 16d nails.

(6) Pressure treated landscape timbers can not be used.

(7) Use wedges as necessary to obtain tight fit. Nail wedges to timbers.

(8) All hardware used with cable must be able to develop the minimum breaking strength specified. Use thimbles at all loops in cable. Install cable clamps with saddles bearing against the live end and U-bolts bearing against the dead end.

(9) It is acceptable to tie anchor bolts to cap reinforcement.

Texas Department of Transportation
Bridge Division

MINIMUM ERECTION AND BRACING REQUIREMENTS
PRESTRESSED CONCRETE I-BEAMS AND I-GIRDERS

MEBR(C)

FILE: mebcstel.dgn	DN: TxDOT	CK: TxDOT	DW: TxDOT	CK: TxDOT
© TxDOT January 2005	DISTRICT	FEDERAL AID PROJECT		SHEET
REVISIONS 06-2007: Revised "Cross Bracing Detail", Hauling, Erection Note and added I-Girders.	COUNTY		CONTROL SECT JOB	HIGHWAY

MEBR (C) (Rev. 6-2007)

HAULING & ERECTION:
The Contractor's attention is directed to the possible lateral instability of prestressed concrete beams and girders over 130' long, especially during hauling and erection. The use of the following methods to improve stability is encouraged: Locate lifting devices at the maximum practical distance from beam ends; use external lateral stiffening devices during hauling and erection; lift with vertical lines using two machines; and take care in handling to minimize inertial and impact forces.

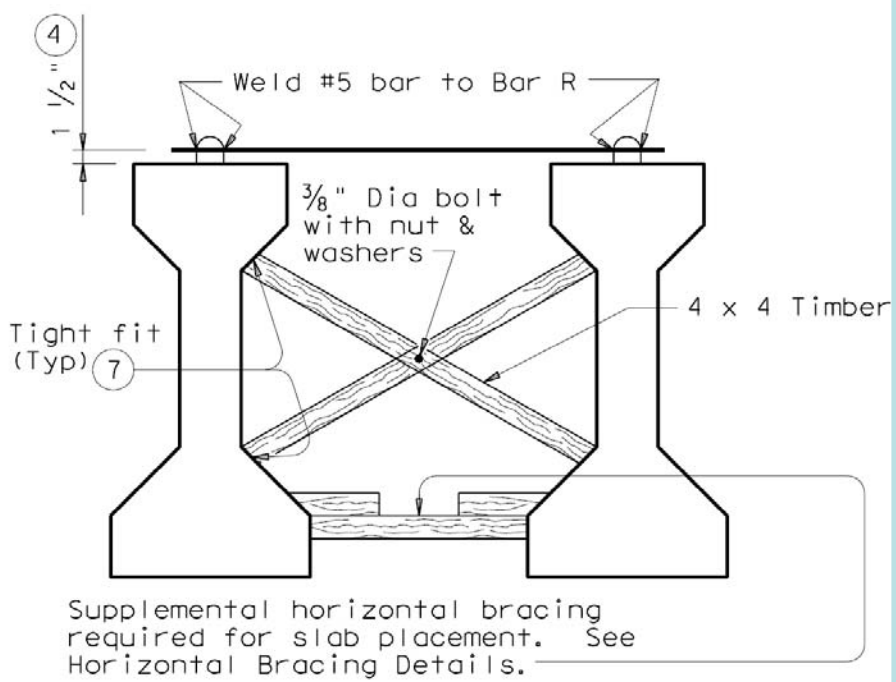

CROSS BRACING DETAIL 6

Texas Department of Transportation
Bridge Division

MINIMUM ERECTION AND BRACING REQUIREMENTS
PRESTRESSED CONCRETE I-BEAMS AND I-GIRDERS

MEBR(C)

FILE: mebcste1.dgn	DN: TxDOT	CK: TxDOT	DW: TxDOT	CK: TxDOT	
© TxDOT January 2005	DISTRICT	FEDERAL AID PROJECT			SHEET
REVISIONS 06-2007: Revised "Cross Bracing Detail", Hauling, Erection Note and added I-Girders.	COUNTY		CONTROL	SECT	JOB	HIGHWAY

Supplemental Horizontal Bracing

Supplemental Horizontal Bracing

Supplemental Horizontal Bracing

Structural Steel Beams

Structural Steel Beams

- Rolled “W” Shape “I”- Beams
  - W18 thru W40
* Plate Girders “I” - Section

Rolled “W” Shape “I”- Beams

- Mainly Straight
- W18 Thru W40
- SBBR(S)

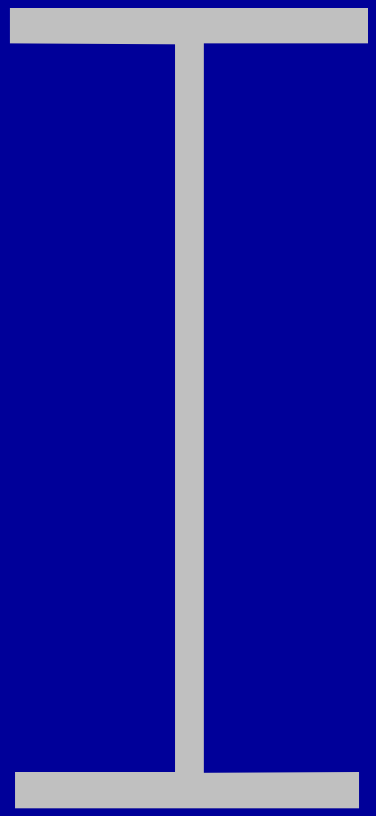

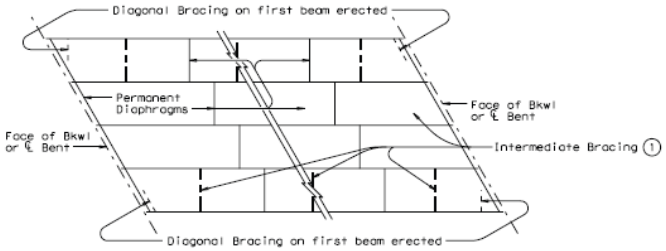

ERECTION AND SLAB PLACEMENT BRACING

(Showing 30 ft Roadway, 24 and 28 ft Roadways similar)

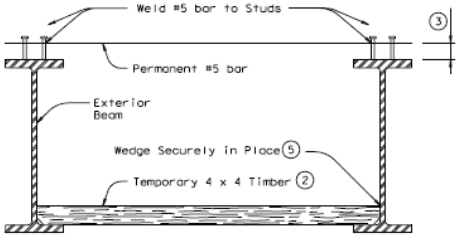

ELEVATION

INTERMEDIATE BRACING DETAILS (1)

(1) Install in exterior bays prior to slab placement. Space equally between permanent diaphragms (12'-6" Max Spa).

(2) Pressure treated landscape timbers must not be used. Remove temporary bracing after deck is placed.

(3) Place and weld #5 bars as shown during erection. If forming deck with prestressed panels, bars can be temporarily removed, one at a time, during panel erection. Re-install bar prior to additional panel erection. Bars can rest on panels and be bent down and welded to stud connectors.

(4) It is acceptable to tie anchor bolts to cap reinforcement.

(5) Use wedges as necessary to obtain tight fit. Nail wedges to timbers.

(6) All hardware used with cable must be able to develop the minimum ultimate strength specified. Use thimbles at all loops in cable. Install cable clamps with saddles bearing against the live end and U-bolts bearing against the dead end.

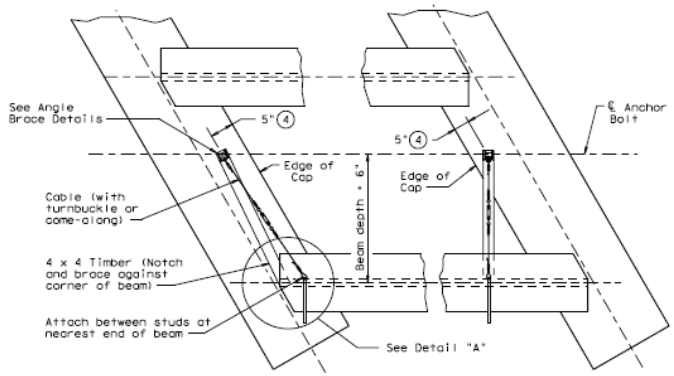

PLAN

TABLE A	
Beam Type	Req Min Cable Ultimate Strength (6)
W18 & W21	10.5 K
W24 & W27	14.3 K
W30 & W33	18.2 K
W36 & W40	20.8 K

GENERAL NOTES:
Permanent diaphragms shall be placed immediately after erection of each beam.
Intermediate bracing shall remain in place until slab concrete has attained a compressive strength of 3,000 psi.
All bracing required on this standard is considered subsidiary to Structural Steel (Rolled Beam).

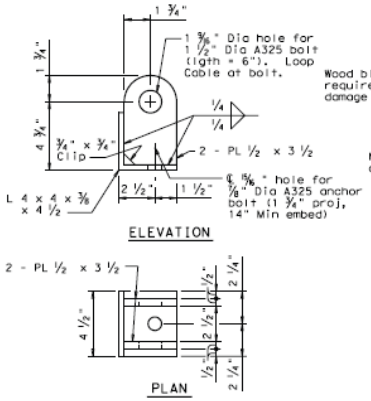

ANGLE BRACE DETAILS

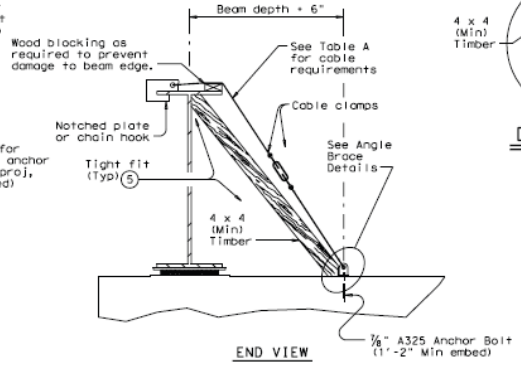

DIAGONAL BRACING DETAILS (2)

(To be used on both ends of the first beam erected in the span.)

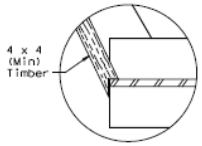

DETAIL "A"

The details shown on this sheet are applicable for use only with the Steel Beam Standard Designs shown on Standards SBSD-24, SBSD-28 and SBSD-30.

Texas Department of Transportation
Bridge Division

STANDARD ERECTION AND BRACING REQUIREMENTS

STEEL BEAM SPANS

SBBR

FILE: sbstde01.dgn	DN: JMH	CK: TxDOT	DW: JTR	CK: TxDOT
© TxDOT August 2004	DISTRICT	FEDERAL AID PROJECT		SHEET
REVISIONS Rev. 02-06: Diagonal Brace	COUNTY	CONTROL	SECT	JOB	HIGHWAY

Steel Structures - Misc.

- May need to design supplemental temporary bracing for slab placement on steel I-girders
- Standard does not address slab placement bracing - it assumes the diaphragms will do the job
- Some bolted channel diaphragms won’t do the job

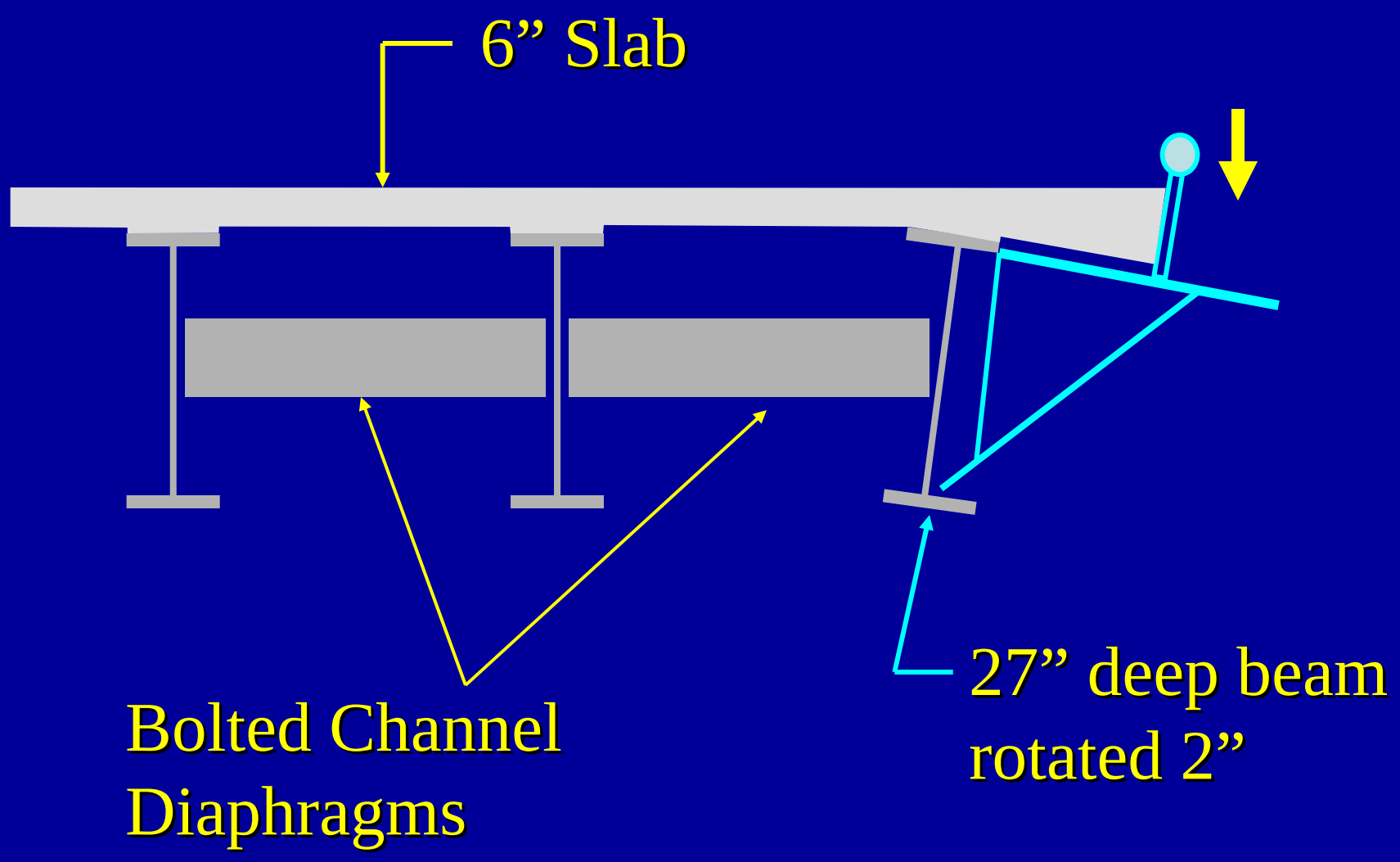
6” Slab
Bolted Channel Diaphragms
27” deep beam rotated 2”

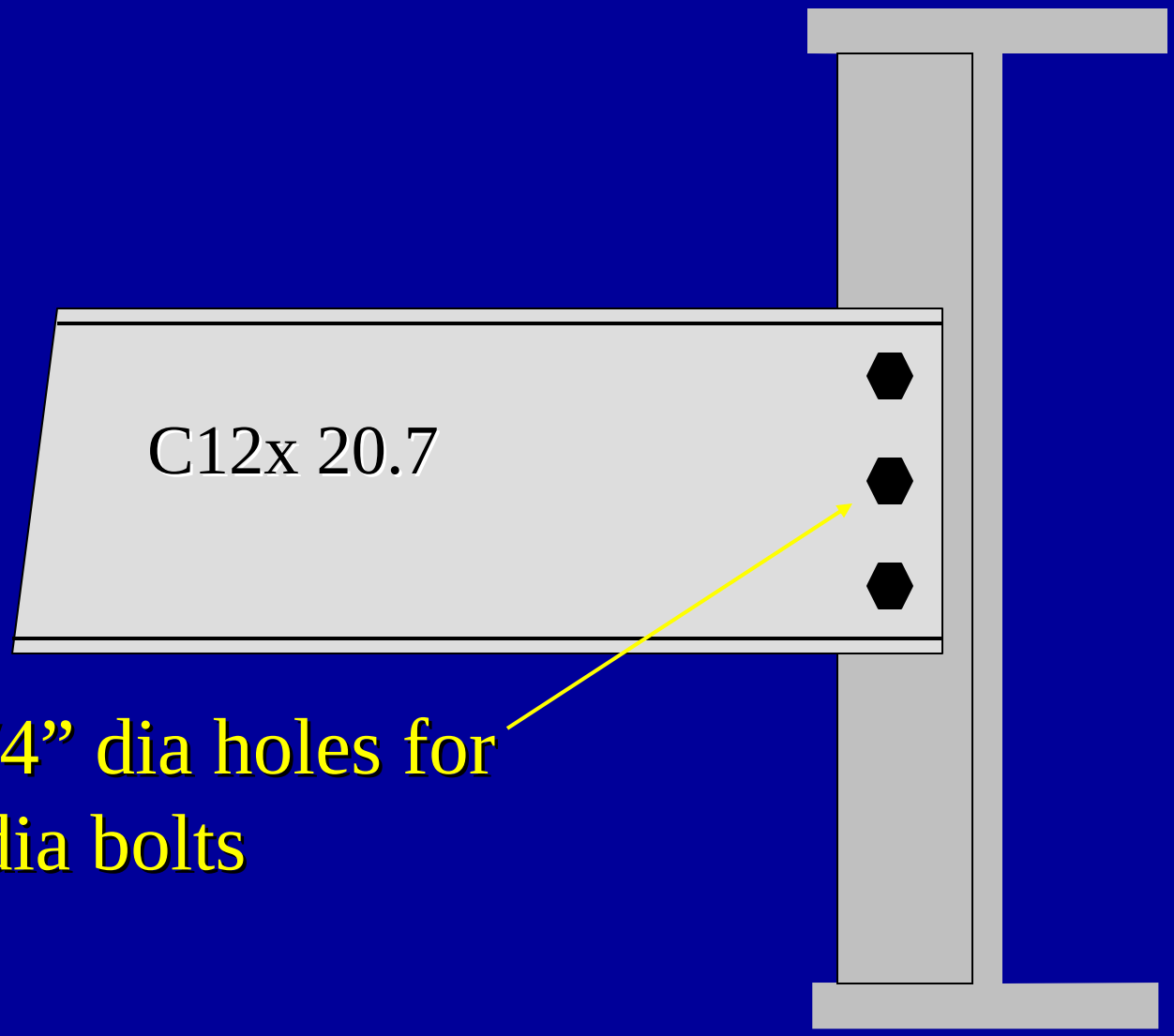

1 1/4” dia holes for
1” dia bolts

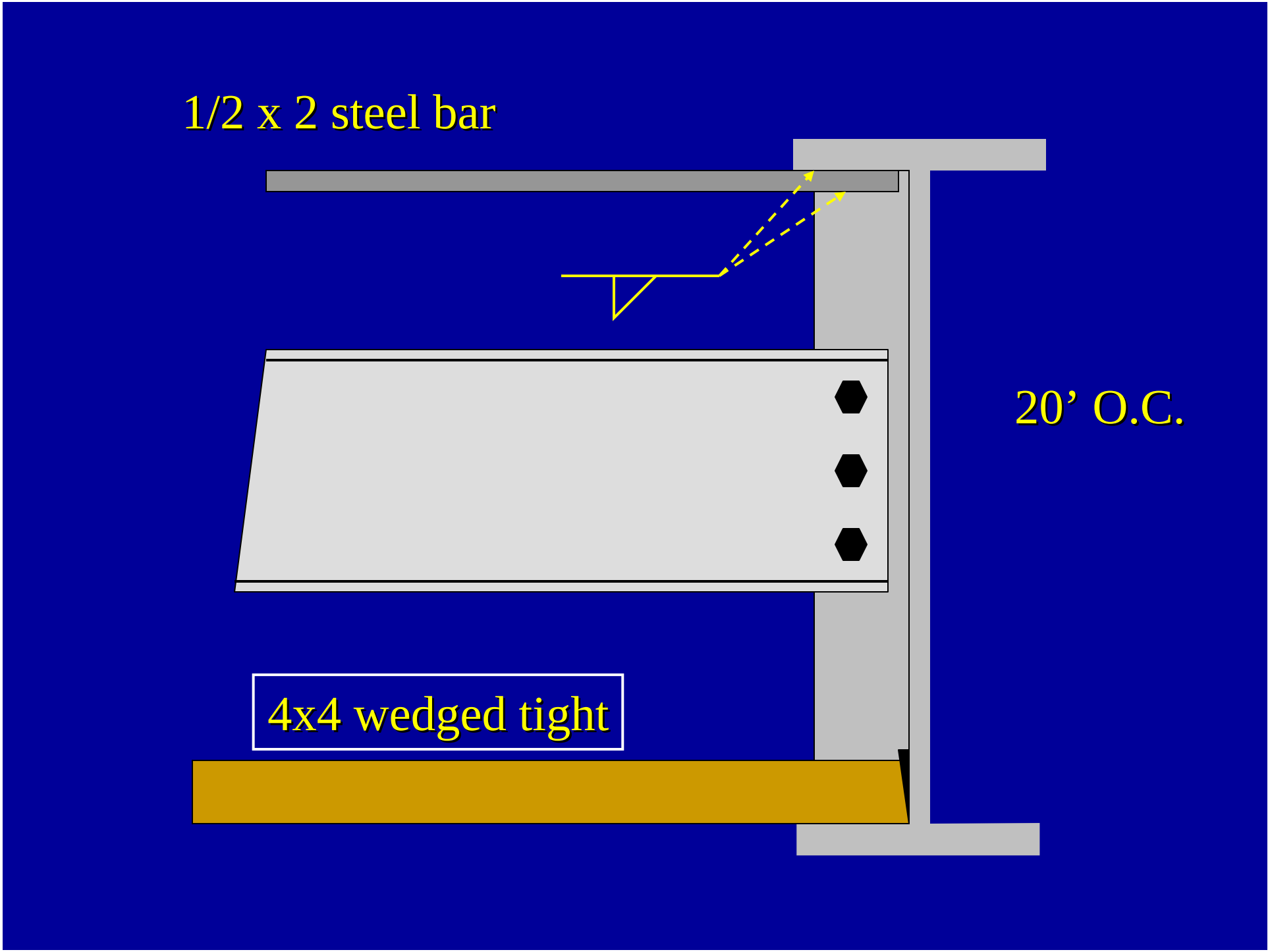
1/2 x 2 steel bar
20’ O.C.
4x4 wedged tight

Plate Girders “I” Section

Plate Girders “I” Section

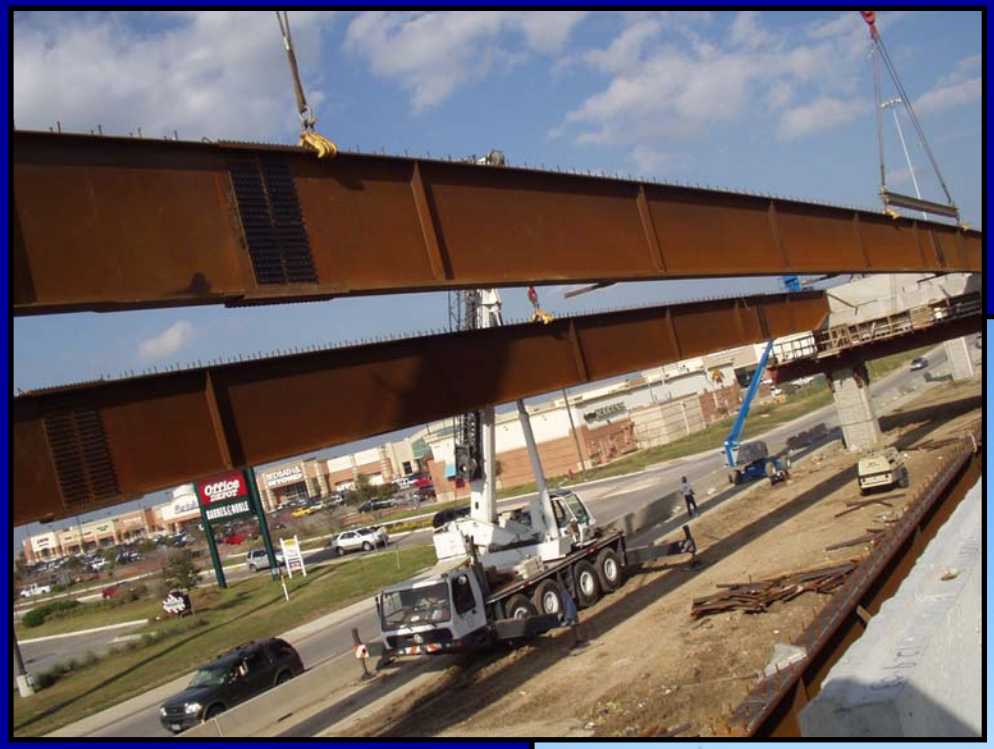

Plate Girders

- Characteristics
  - Tall Beams (Composite Section)
    - Composite Section
    - TxDOT (3:1)
    - ASSHTO up to (6:1)
  - Long Span (less bents)
  - High in elevation (3rd, 4th level)
  - Curved
  - Ramps (Smaller Radii)
  - Metropolitan Areas
    - Populated
    - High Traffic

Plate Girders

TxDOT "Bridge Design Manual"

"Erection Issues"

"Girder sections tend to be unstable during erection if the top flange plate is too narrow. Composite design tends to make the top flange narrow. Erection procedures, including falsework and girder support while welding or bolting splices, require close coordination with the contractor.

Erection is especially critical for curved girder units. Accurate analysis of deflections and stresses during erection stages is very complicated and time consuming. The tendency is to rely on judgment until trouble occurs. Except for a few notable mistakes, Texas has managed to get its curved girders erected without significant mishap. Close coordination between field and design personnel is vital."

Plate Girders

Tall Beams

- Composite Section
- TxDOT (3:1)
- ASSHTO up to (6:1)

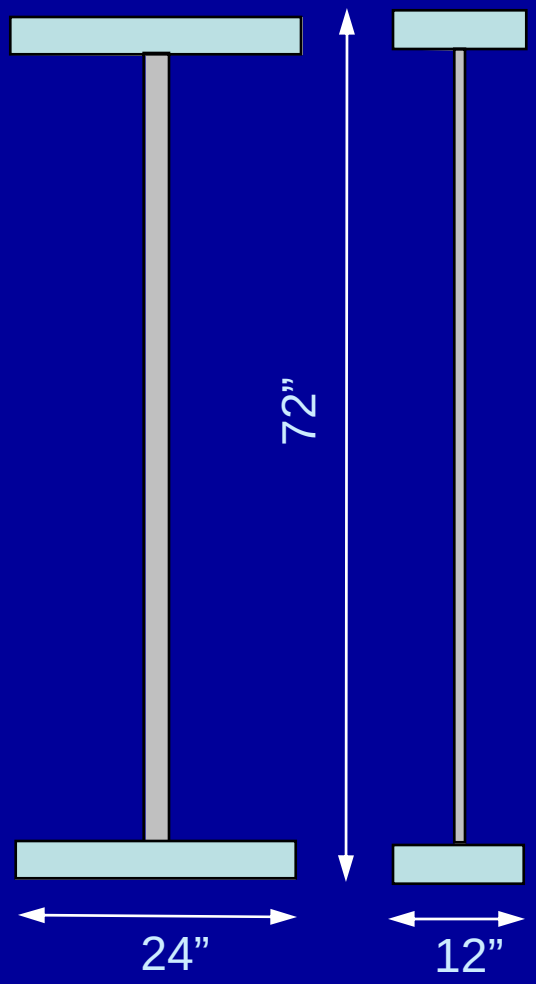

Plate Girders

- Long Span (less bents)
- High in elevation (3rd, 4th level)

Plate Girders

– Straight

Plate Girders

– Curved

Plate Girders

- Metropolitan Areas
  - Populated
  - High Traffic

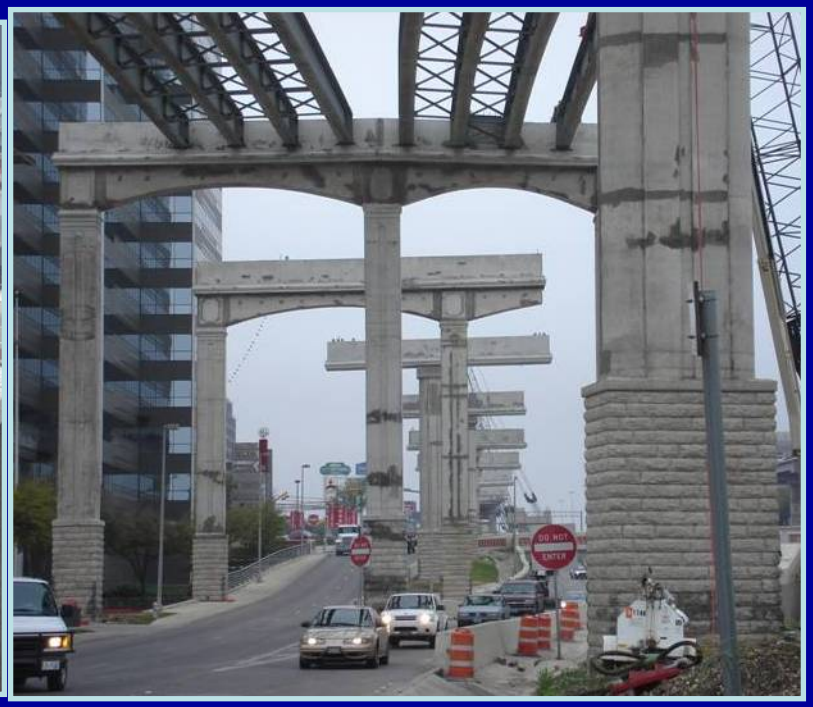

Plate Girders

- Massive Equipment
- Numerous Worker

Plate Girders

Plate Girders

Plate Girders

Structural Steel

441.3.A.6.a. Erection Drawings.

Submit 2 copies of erection drawings in accordance with Item 5, “Control of the Work,” before erection of railroad underpasses, trusses, field-spliced (welded or bolted) girders, arches, or other members for which erection drawings are required on the plans. Submit an additional copy of the drawings for railroad underpasses. Erection drawings are not required for rolled I-beam units unless otherwise noted on the plans.

Structural Steel

441.3.A.6.a. Erection Drawings. (Cont.)

Clearly indicate at least:

- procedures;
- sequence of work;
- equipment to be used;
- location of falsework, erection cranes, and holding cranes;
- falsework design details;
- girder lifting points;
- adjacent structures loaded; and
- requirements for releasing cranes during erection that differ from the requirements of this Item or those shown on the plans.

If site conditions differ from those assumed for these drawings, revise the drawings to reflect the actual conditions before continuing the erection work.

Structural Steel

ITEM 5

CONTROL OF THE WORK

5.1. Authority of Engineer. The Engineer has the authority to observe, test, inspect, approve, and accept the work. The Engineer decides all questions about the quality and acceptability of materials, work performed, work progress, Contract interpretations, and acceptable Contract fulfillment. The Engineer has the authority to enforce and make effective these decisions.

The Engineer acts as a referee in all questions arising under the terms of the Contract. The Engineer's decisions will be final and binding.

Structural Steel

ITEM 5

CONTROL OF THE WORK (Cont.)

5.2. Plans and Working Drawings. When required, provide working drawings to supplement the plans with all necessary details not included on the Contract plans. Prepare and furnish working drawings in a timely manner and obtain approval, if required, before the beginning of the associated work. For all working drawing submittal requirements, the Engineer may allow electronic and other alternative submission procedures. Have a licensed professional engineer sign, seal, and date the working drawings as indicated in Table 1.

Structural Steel

Table 1
Signature and Approval Requirements for Working Drawings

Working Drawings For		Requires Licensed Professional Engineer's Signature, Seal, and Date	Requires Departmental Approval
1. Alternate or optional designs submitted by Contractor		Yes	Yes
2. Supplementary shop and fabrication drawings for structural Items		No unless required on the plans	See applicable Item
3. Contractor-proposed temporary facilities that affect the public safety, not included on the plans		Yes	Yes
4. Form and falsework details	Bridges, retaining walls, and other major structures	Yes unless otherwise shown on the plans	No[1]
	Minor structures	No unless otherwise shown on the plans	No
5. Erection drawings		Yes	No[1]
6. Contractor-proposed major modifications to traffic control plan		Yes	Yes

1. The Engineer may require that the Contractor have a licensed professional engineer certify that the temporary works are constructed according to the sealed drawings.

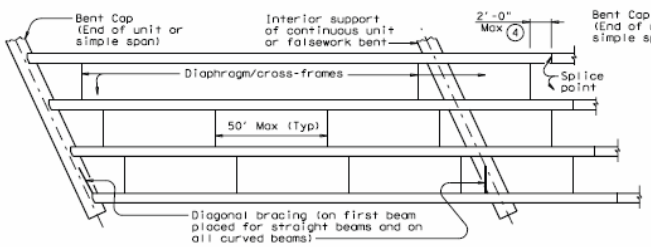

SKEWED

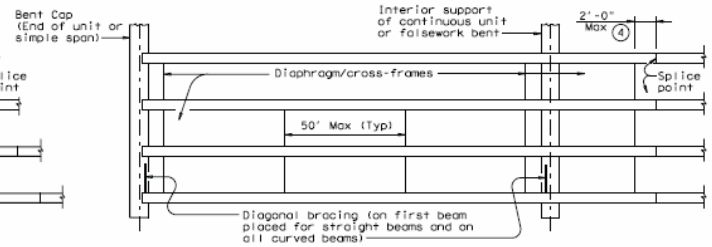

NORMAL

TYPICAL BRACING PLANS

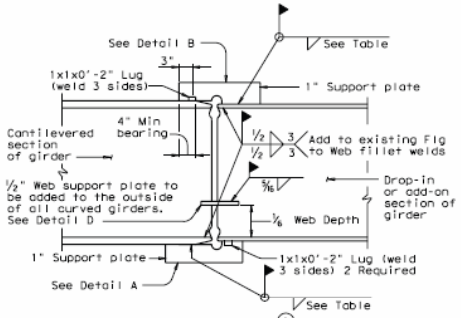

50 TON MAXIMUM (1)

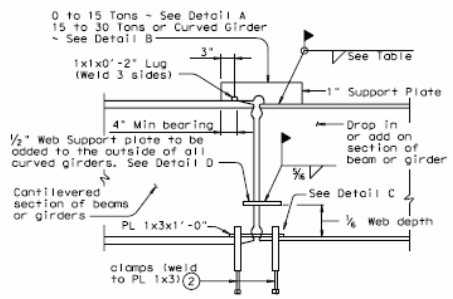

30 TON MAXIMUM (1)

ELEVATION OF TYPICAL WELDED SPLICE SUPPORTS (3)

(1) Weights indicated are total weight of drop-in section. Special design will be required when weight of drop-in section exceeds 50 Tons or supported reaction of add-on section exceeds 25 Tons.

(2) Use extra heavy duty or extra heavy service clamps with a minimum screw diameter of ¾".

(3) All top and bottom flange support plates shall be in place before the beam or girder is erected; web plates and lugs shall be attached immediately after erection. Care shall be exercised in removing the support plates and lugs. Flange and web shall be ground smooth after their removal.

(4) Provide additional timber bracing if permanent diaphragms/cross-frames do not meet requirements shown.

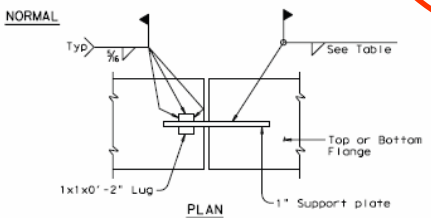

PLAN

DETAIL A

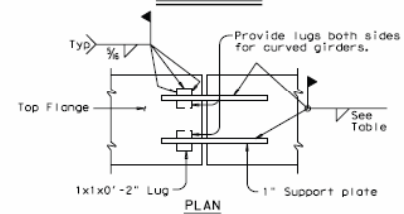

PLAN

DETAIL B

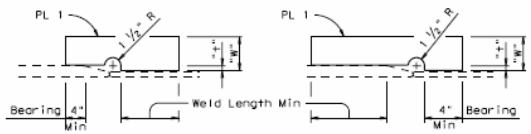

SHOWING PLATE WELDED TO THINNER OR EQUAL FLANGE

SHOWING PLATE WELDED TO THICKER FLANGE

SUPPORT PLATE DETAILS

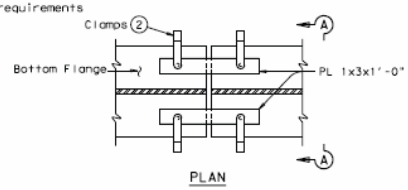

PLAN

DETAIL C

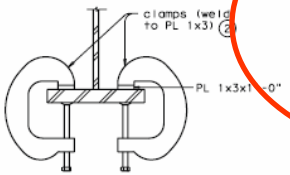

SECTION A-A

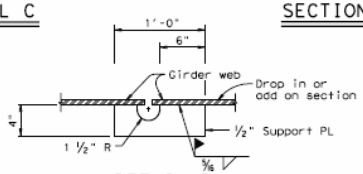

DETAIL D

Web support plates to be used for single line erection of curved girders.

"t" inches	1 PL to 15T or 2 PLs ~ 15T to 30T			
	"W"	Required Weld Length		
		5/16" Weld	3/8" Weld	7/16" Weld
0 to ½	6"	10"	10"	10"
½ to 1 ½	8"	12"	11"	10"

3 PLs ~ 30T to 50T				
"W"	Required Weld Length			
	5/16" Weld	3/8" Weld	7/16" Weld	½" Weld
7"	15"	13"	12"	10"
9 ½"	18"	16"	14"	12"

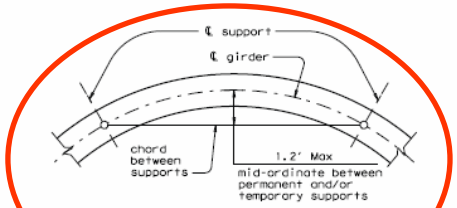

CURVED GIRDER ERECTION SUPPORT DETAIL

GENERAL NOTES:

This standard is to be used as a guide in preparing the required erection drawings (see Item 441). The contractor is responsible for the adequacy of bracing and shoring at all times.

Do not use timber sections less than 4 x 4 (nominal) as brace or shoring members. Do not use pressure treated landscape timbers or timbers that are twisted, warped or cracked as brace or shoring members.

All hardware used with cables must be able to develop the cable's ultimate strength, specified on the erection drawings. Use thimbles at all loops in cable. Install cable clamps with saddles bearing on the live end and U-bolt bearing on the dead end. Do not use worn, frayed, kinked, or corroded cable.

On the erection drawings, indicate the following:

1. Assumed loads (dead, live, wind, etc.) used to design the brace and shoring members.
2. Timber species, grade, and moisture content.
3. Grade and size of steel sections used for bracing or shoring members
4. Grade and size of all threaded hardware (bolts, lag screws, concrete anchors, etc.) required for bracing and shoring.
5. Minimum embedment of concrete anchors.
6. Required weld sizes and lengths.
7. Manufacturer's name and model number of manufactured shoring or bracing.

HORIZONTALLY CURVED I-GIRDERS:

Unless shown otherwise on the erection drawings, support girder sections such that the mid-ordinate of the girder does not exceed 1.2' between support points. See "Curved Girder Erection Support Detail". Brace girders at all supports. Do not remove temporary supports until continuous girders are supported by at least three permanent supports, cross-frames or diaphragms are fully installed, and splices are completed.

When using the support plate details shown on this standard, as a minimum, use a support near the center of the girder section until the splice is completed.

Texas Department of Transportation
Bridge Division

MINIMUM ERECTION AND BRACING REQUIREMENTS

STEEL GIRDERS AND BEAMS

MEBR(S)

FILE: mebsstel.dgn	DN: TxDOT	CK: TxDOT	DW: TxDOT	CK: TxDOT
© TxDOT April 2006	DISTRICT	FEDERAL AID PROJECT		SHEET
REVISIONS				
	COUNTY	CONTROL	SECT	JOB	HIGHWAY

Structural Steel

HORIZONTALLY CURVED I-GIRDERS:

Unless shown otherwise on the erection drawings, support girder sections such that the mid-ordinate of the girder does not exceed 1.2' between support points. See "Curved Girder Erection Support Detail". Brace girders at all supports. Do not remove temporary supports until continuous girders are supported by at least three permanent supports, cross-frames or diaphragms are fully installed, and splices are completed.

When using the support plate details shown on this standard, as a minimum, use a support near the center of the girder section until the splice is completed.

Texas Department of Transportation
Bridge Division

MINIMUM ERECTION AND BRACING REQUIREMENTS

STEEL GIRDERS AND BEAMS

MEBR(S)

Structural Steel

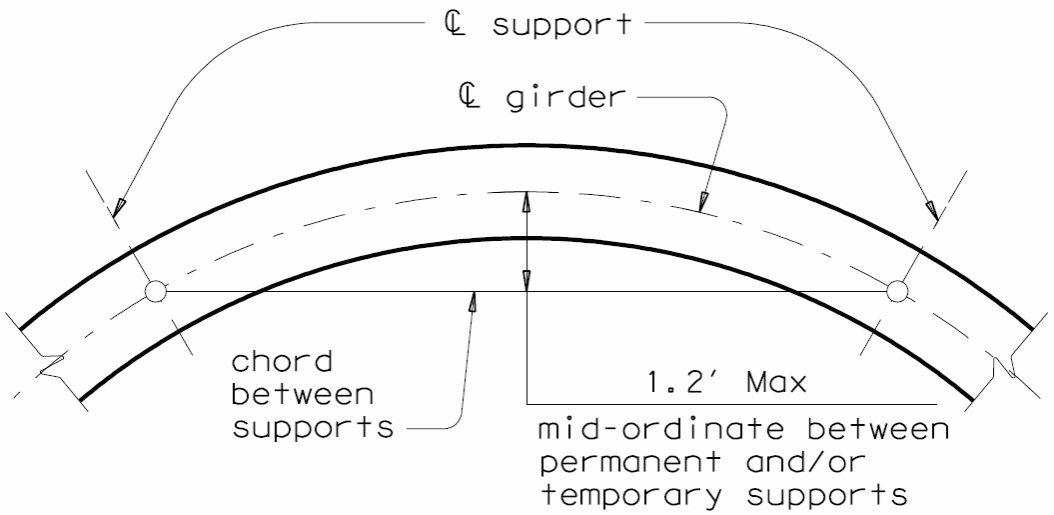

CURVED GIRDER
ERECTION SUPPORT DETAIL

Texas Department of Transportation
Bridge Division

MINIMUM ERECTION AND BRACING REQUIREMENTS

STEEL GIRDERS AND BEAMS

MEBR(S)

Structural Steel

- Sequence
  - Beams ID Numbers
  - Splices
  - Starting end
- Procedure
  - Number and capacity of cranes
  - Crane setup locations
  - Beam pickup points
  - Beam hooks capacities
  - False Bent locations
  - Etc.
- Load Calculations
  - Each section of beam
  - Shoring capacity
  - Crane
    - Capacity
    - location
    - Boom Angles
    - Brand and Type

Resources

- **TxDOT -** ***Standard Spec. 2004***
- **TxDOT -** ***Standard MEBR (S)***
- **TxDOT -** ***Bridge Design Manual***
- **TxDOT –** ***BRG – Field Ops., Const. & Maint.***

- **AASHTO -** ***Guide Design Specifications for Bridge Temporary Works, 1995***
- **AASHTO -** ***Construction Handbook for Bridge Temporary Works, 1995 2007***

The End

Questions?

Questions?