County: Any Hwy: Any Design: BRG Date: 10/2007

Design for: LRFD Simple Span Steel Plate Girder

Design example is in accordance with the 4th Edition of the "AASHTO LRFD Bridge Design Specifications" and TxDOT LRFD Bridge Design Manual. The design software referenced is in accordance with the 3rd Edition of the "AASHTO LRFD Bridge Design Specifications" with 2006 Interims.

This design is for a typical single span steel girder unit.

Design Parameters

Roadway width: 30'
no skew
2 lanes
4 girders spaced at 8'

Span length: 140.79'
Haunch: 2"
T501 rail
8" deck
design for 2" overlay
roadway has future ADT of 2100 vehicles/day
urban arterial

$$\text{Length} = 140.79 \text{ ft} \quad \text{haunch} = 2 \text{ in} \quad \text{slab} = 8 \text{ in}$$

1. Compute input data for STLBRIDGE LRFD girder analysis program

Information relevant to compiling the input file for STLBRIDGE
* distance from curbline to exterior girder: 2'
* consider section to be composite throughout (conservative design)
* do not consider as variable depth girder
* variable axle spacing increment: 8 ft
* space crossframes evenly and at 30' or less spacing, per TXDOT Bridge Design Manual, therefore, six crossframes will be provided spaced at 28.16'.

Before we proceed with entering data into STLBRIDGE, three pieces of information must be calculated: superimposed dead load (rail load); future wearing surface (overlay load); and ADTT(sl). The number of shear studs and amount of slab reinforcement were taken directly from TXDOT standard sheets SGMD and SSB-28, respectively. Shear stud spacing along the girder is output by STLBRIDGE.

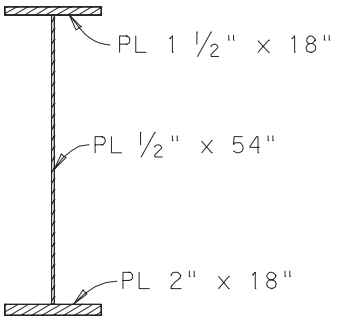

Fig.1 Initial steel girder section

calculate rail weight

2 ~ T501 rails spread over 4 girders:

$$\text{rail} = 326 \cdot \frac{2}{4}$$

$$\text{rail} = 163 \text{ psf}$$

calculate weight of 2" overlay

weight of overlay material = 140 pcf

$$\text{overlay} = 140 \cdot \left(\frac{2}{12}\right)$$

$$\text{overlay} = 23.333 \text{ plf}$$

calculate ADTT(sl)

$$\text{ADT} = 2100$$

According to AASHTO C3.6.1.4.2, the ADT must be multiplied by the fraction of trucks in traffic factor, found in Table C3.6.1.4.2-1, to obtain the average daily truck traffic (ADTT). For our conditions, the Other Urban multiplier, 0.10, would be most appropriate.

$$\text{ADTT} = 0.10 \cdot \text{ADT}$$

To calculate the single-lane average daily truck traffic (ADTT(sl)), the ADTT is multiplied by another factor, p, which can be found in Table 3.6.1.4.2-1. For two lanes, this is 0.85.

$$p = 0.85$$

$$\text{ADTTsl} = p \cdot \text{ADTT}$$

$$\text{ADTTsl} = 178.5$$

It is highly recommended at this point that the engineer take the time to refer to the users manual for assistance in running STLBRIDGE. Things to pay attention to in designing the girder with this program are to keep the performance ratio less than 1 and confirm that the live load deflection remains below the allowable limits. Both the interior and exterior girder conditions must be checked.

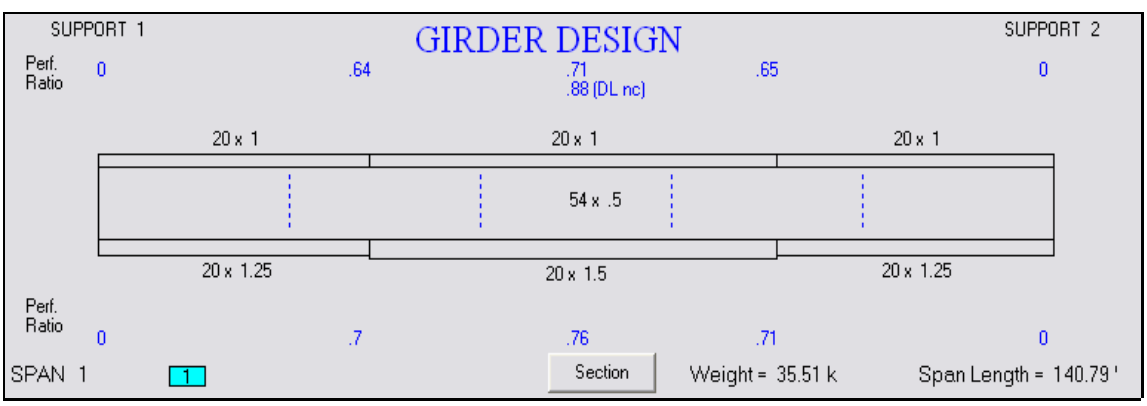

Fig. 2 Final Steel Girder Design

Final Steel Girder dimensions:

depth of web:	$D = 54 \text{ in}$
thickness of web:	$tw = 0.5 \text{ in}$
width of flanges:	$bf = 20 \text{ in}$
thickness of top flange:	$ttf = 1 \text{ in}$
thickness of bottom flange at end supports:	$btf = 1.25 \text{ in}$
thickness of bottom flange at center of beam:	$btf_mid = 1.5 \text{ in}$

The length of the tension flange 20x1.5 plate is 60'; the 20x1.25 plates are 40.4'.

2. Confirm steel girder design output from STLBRIDGE

Girder depth

From Table 2.5.2.6.3-1, traditional minimum girder depth is 0.033*L (feet).

$girddepth = 0.033 \cdot Length \cdot 12 \qquad girddepth = 55.75 \text{ in}$

The overall depth of the girder is:

$girder = btf + D + ttf \qquad girder = 56.25 \text{ in}$

Therefore, the girder depth is sufficient.

Web thickness

Assuming no longitudinal stiffeners, equation 6.10.2.1.1-1 may be used to design the web thickness.

$$tw_min = \frac{D}{150} \qquad tw_min = 0.36 \text{ in}$$

The minimum web thickness according to TXDOT Bridge Design Manual for a steel girder is 0.5 in. Both of these thicknesses are less than or equal to the design web thickness of 0.5 in.

Flange width and Thickness

In 6.10.2.2, there are four equations that the top and bottom flange proportions must satisfy.

* Eq. 6.10.2.2-1:

top flange: $\frac{bf}{2 \cdot ttf} = 10 \text{ in}$ bottom flange: $\frac{bf}{2 \cdot btf} = 8 \text{ in}$

Both are less than 12 in, therefore flange dimensions are ok.

* Eq. 6.10.2.2-2:

$$bf_min = \frac{D}{6} \qquad bf_min = 9 \text{ in}$$

Bf_min is less than the actual width of the flange, therefore is ok.

* Eq. 6.10.2.2-3:

$$tf_min = 1.1 \cdot tw \qquad tf_min = 0.55 \text{ in}$$

Top and bottom flanges are both greater than tf_min, therefore is ok.

* Eq. 6.10.2.2-4:

$$0.1 \le \frac{Iyc}{Iyt} \le 10$$

compression flange: $Iyc = ttf \cdot \frac{bf^3}{12}$

tension flange, at ends: $Iyt = btf \cdot \frac{bf^3}{12}$

tension flange, at midpoint: $Iyt_mid = btf_mid \cdot \frac{bf^3}{12}$

$$\frac{Iyc}{Iyt} = 0.8$$

$$\frac{Iyc}{Iyt_mid} = 0.67$$

Both ratios for ends and midpoint of the girder check out, therefore is ok.

The compression flange must also be checked according to C6.10.3.4.

* Eq. C6.10.3.4-1:

$$bfc_min = \frac{Length}{85} \cdot 12$$

$$bfc_min = 19.876 \quad in$$

We are using a flange width of 20 in. on both top and bottom, therefore compression flange is ok.

* TXDOT Bridge Design Manual Checks:

bf > 0.25*D = 13.5 in

bf > 15 in

We are using a flange width of 20 in., therefore flange width is ok.

For Straight Steel Girders:

tf > 3/4 in

Top and bottom flanges both have a thickness greater than 3/4 in, therefore flange thickness is ok.

3. Design welds for Plate Girder (6.13.3)

We will initially assume a standard weld size of 5/16" (0.3125") for the plate welds. From our girder analysis, we know that the Strength I shear, V_u, is -258k. To determine if this weld size can be used, the unit shear strength, v, must be computed and then compared to the resistance of the weld material.

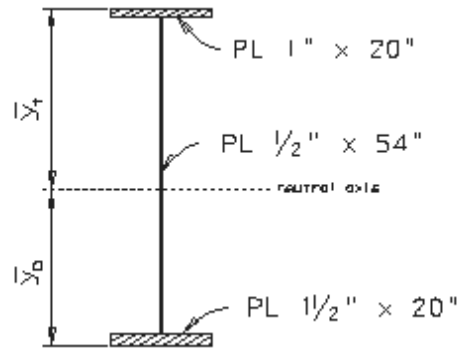

Fig. 3 Location of neutral axis at midpoint of steel girder

$$weld = \frac{5}{16}\ in$$

$$Vu = 258\ \ kip$$

Calculate location of neutral axis

$$Atot = btf_mid \cdot bf + ttf \cdot bf + D \cdot tw \qquad Atot = 77\ \ in^2$$

$$Ay1 = ttf \cdot bf \cdot \frac{ttf}{2}$$

$$Ay2 = D \cdot tw \cdot \left(ttf + \frac{D}{2}\right)$$

$$Ay3 = btf_mid \cdot bf \cdot \left(ttf + D + \frac{btf_mid}{2}\right)$$

$$Ay = Ay1 + Ay2 + Ay3 \qquad Ay = 2438.5\ in^3$$

$$yt_bar = \frac{Ay}{Atot} \qquad yt_bar = 31.669\ in$$

Check top flange weld

* Calculate unit shear strength required ($v = V_u * Q_t / I_x$)

$$Af_top = ttf \cdot bf$$

$$yt = yt_bar - \frac{ttf}{2}$$

$$Qt = Af_top \cdot yt \qquad Qt = 623.377\ \ in^3$$

$$Ix1 = \frac{bf \cdot ttf^3}{12} + bf \cdot ttf \cdot (yt)^2$$

$$Ix2 = \frac{tw \cdot D^3}{12} + tw \cdot D \cdot \left(\frac{D}{2} + ttf - yt_bar\right)^2$$

$$Ix3 = \frac{bf \cdot btf_mid^3}{12} + bf \cdot btf_mid \cdot \left(ttf + D + \frac{btf_mid}{2} - yt_bar\right)^2$$

$$Ix = Ix1 + Ix2 + Ix3 \qquad Ix = 43758.722\ in^4$$

$$v_top = \frac{Vu \cdot Qt}{Ix}$$

$$v_top = 3.675\ \frac{kip}{in}$$

* Calculate weld capacity (6.13.3.2.4b)

6.5.4.2:

$$\phi_e2 = 0.80$$

$$F_exx = 70\ ksi$$

$$Rr = 0.6 \cdot \phi_e2 \cdot F_exx \qquad \text{(Eq. 6.13.3.2.4b-1)}$$

$$Rr = 33.6\ ksi$$

$$throat_eff = \frac{weld}{\sqrt{2}} \qquad throat_eff = 0.221\ in$$

$$area_eff = 2 \cdot throat_eff \qquad area_eff = 0.442\ in^2$$

$$resistance = Rr \cdot area_eff$$

$$resistance = 14.849\ \frac{kip}{in}$$

Resistance is greater than the unit shear strength, therefore weld size of 5/16" on top is ok.

<u>Check bottom flange weld</u>

Numbers for the bottom weld are the same as those for the top weld; the only parameter which changes is Q in the unit shear calculation.

$$Af_bot = btf_mid \cdot bf$$

$$yb = ttf + D + \frac{btf_mid}{2} - yt_bar$$

$$Qb = Af_bot \cdot yb \qquad Qb = 722.435\ in^3$$

$$v_bot = \frac{Vu \cdot Qb}{Ix}$$

$$v_bot = 4.259\ \frac{kip}{in}$$

Resistance is greater than the unit shear strength, therefore weld size of 5/16" on bottom is ok.

4. Design bearing stiffeners

STLBRIDGE provides a summary of reactions at the girder supports for bearing reactions and pier reactions. The load reported under the Total Max column in the Bearing Reactions table will be used for the bearing resistance calculations. The load reported under the Total DL+LL+I column in the Pier Reactions table will be used to check the weld capacity.

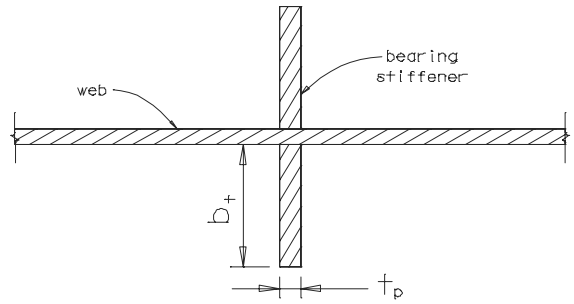

Fig. 4 Plan view of bearing stiffener

Calculate bearing resistance

* Projecting width of stiffener (6.10.11.2.2-1)

$E = 29000\ \text{ksi}$

$Fys = 50\ \text{ksi}$

TXDOT standard sheet SBMD shows a t_p of 3/4" as typical.

$tp = 0.75\ \text{in}$

$bt_max = 0.48 \cdot tp \cdot \sqrt{\frac{E}{Fys}}$ $\qquad bt_max = 8.67\ \text{in}$

Since 8.7" is an upper bound, we'll use 8.5" as the projecting width of the bearing stiffener.

* Calculate bearing resistance (6.10.11.2.3)

$bt = 8.5\ \text{in}$

6.5.4.2:

$\phi b = 1.0$

From TXDOT standard sheet SBMD, clip length is 1.5": $\quad clip = 1.5\ \text{in}$

$Apn = 2 \cdot (bt - clip) \cdot tp \qquad Apn = 10.5\ \text{in}^2$

$Br = \phi b \cdot 1.4 \cdot Apn \cdot Fys \qquad Br = 735\ \text{kip}$

From STLBRIDGE output, the bearing reaction is 175 kips, which is less than the provided bearing reaction of 735 kips. Therefore, we may use a PL 3/4" x 8 1/2" for the bearing stiffener.

Check axial compression

According to 6.9.2.1, the factored resistance for components in compression, P_r, shall be taken as $P_f = \phi_c * P_n$.

6.5.4.2:

$\phi c = 0.9$

* 6.9.4.1

$K = 0.75$

$l = D$

$Is = \frac{tp \cdot (2 \cdot bt + tw)^3}{12}$

According to 6.10.11.2.4b, the effective width of the web surrounding the stiffener is taken as $9*t_w$.

$$As = 2\cdot(bt\cdot tp + 9\cdot tw\cdot tw)$$

$$rs = \sqrt{\frac{Is}{As}}$$

$$Fy = Fys$$

* Eq. 6.9.4.1-3:

$$\lambda = \left(\frac{K\cdot l}{rs\cdot\pi}\right)^2\cdot\frac{Fy}{E}$$

$$\lambda = 0.015$$

According to 6.9.4.1, if $\lambda < 2.25$, then P_n is evaluated using Eq. 6.9.4.1-1:

$$Pn = 0.66^{\lambda}\cdot Fy\cdot As$$

$$Pn = 857.228 \ \ kip$$

* Eq. 6.9.2.1-1

$$Pr = \phi c\cdot Pn$$

$$Pr = 771.505 \ \ kip$$

From STLBRIDGE output, the pier reaction is 191 kips, which is less than the bearing resistance of 772 kips. Therefore, this stiffener is ok in axial compression.

<u>Check bearing stiffener weld</u>

Assume a fillet weld size of 5/16"
* 6.13.3.2.4b
* 6.5.4.2:

$$\phi e2 = 0.80$$

$$Fexx = 70 \ \ ksi$$

$$Rrw = 0.6\cdot\phi e2\cdot Fexx$$

$$Rrw = 33.6 \ ksi$$

* 6.13.3.5

From TXDOT standard SGMD, clip length is 2.5": $clipl = 2.5 \ \ in$

$$length_eff = 4\cdot(D - 2\cdot clipl)$$

$$throat_eff_w = \frac{weld}{\sqrt{2}}$$

$$Aeff = throat_eff_w\cdot length_eff$$

$$resistance_w = Rrw\cdot Aeff$$

$$resistance_w = 1455.226 \ kip$$

Since the weld resistance of 1455 kips is greater than the pier reaction of 191 kips, the weld size is ok.