Texas Department of Transportation

REQUEST FOR PROPOSAL
CBC4704-00-837DFW

PROPERTY EXCHANGE
FORT WORTH DISTRICT
VARIOUS LOCATIONS

Prepared by:
Texas Department of Transportation
North Region Facilities Management
4777 East US 80
Mesquite, Texas 75150
(214) 320-6635

September 9, 2010

TABLE OF CONTENTS

INTRODUCTION 1

DESCRIPTION OF PROJECT 3

INSTRUCTIONS AND PROPOSAL REQUIREMENTS 6

EVALUATION CRITERIA 10

TxDOT RESERVATION OF RIGHTS 11

LETTER OF INTEREST AND ADDENDUM ACKNOWLEDGEMENT 12

SCHEDULE OF VALUES – PRELIMINARY COST ESTIMATE FORMS 15

SUMMARY OF PROJECT COSTS 19

HUB SUBCONTRACTING PLAN COMMITMENT (HSP) 20

CHILD SUPPORT STATEMENT 21

APPRAISAL INFORMATION 22

ENVIRONMENTAL SITE ASSESSMENT 23

TxDOT PROPERTY LOCATION MAP 24

DEVELOPMENT AND EXCHANGE AGREEMENT (DEA) 25
(**ONLY AVAILABLE ON DISKETT OR INTERNET)**

EXHIBITS
A: Metes and Bounds - IH30 and Collins Road, Arlington **26**

ATTACHMENTS – ONLY AVAILABLE ON DISKETT OR INTERNET **28**
ATTACHMENT A – Surveys, Metes and Bounds (Construction Sites)
ATTACHMENT B – Facility Design and Production Guidelines
ATTACHMENT C – Wage Rates (Buildings and Highways)
ATTACHMENT D – Project-Specific Documents
ATTACHMENT E - Prototypical Maintenance Facility Construction Documents
ATTACHMENT F - Prototypical Area Engineer & Maintenance Facility Construction
ATTACHMENT G – ITEM 506 Temporary Erosion Control

INTRODUCTION

The Texas Department of Transportation (**TxDOT**), an agency of the State of Texas, is issuing this **REQUEST FOR PROPOSAL (RFP)** to select a qualified **PRIVATE ENTITY** to perform the following work, in order of priority:

- Construct a new area engineer and maintenance facility on state property at 2501 SW Loop 820, Fort Worth, Tarrant County.
- Construct a new maintenance facility on state property on SH 144 near Glen Rose, Hood/Somervell County line.
- Construct a new maintenance facility on state property at 2400 U.S. Hwy. 180 West in Mineral Wells, Palo Pinto County. Demolish portions of existing facility.
- Renovate the existing district laboratory building on state property at 2501 SW Loop 820, Fort Worth, Tarrant County.

The above-described work shall be referred to hereinafter as PROJECT **(PROJECT)**. In return for construction of the **PROJECT, TxDOT** will exchange one (1) property, "as-is":

- IH30 and Collins Street (FM 157), Arlington, Tarrant County, including 18.37 acres, more particularly described by metes and bounds in Exhibit A, valued at $12,003,000.

TxDOT is issuing this RFP in accordance with Texas Transportation Code, Section §201.1055.

The **PROJECT** is to be funded by exchange of the existing property, listed above, with an appraised value of $12,003,000 **("as is").** If the PROJECT costs are less than the value of the **TxDOT PROPERTY**, the **PRIVATE ENTITY** will be required to pay the difference, in cash, upon exchange of the **TxDOT PROPERTY** which will occur upon satisfactory completion and acceptance by **TxDOT** of the proposed improvements. If the **PROJECT** costs are more than the value of the **TxDOT PROPERTY**, the **PRIVATE ENTITY** may provide different options for consideration as part of its proposal; any different options submitted must include the proposed exchange value and either the proposed modified scope of work and/or details the amount of funding necessary to complete the **PROJECT**. If the **PROJECT** costs are more than the value of the **TxDOT PROPERTY**, the **PRIVATE ENTITY** has the option to donate the difference. These options will be considered as part of the proposed **PROJECT** review.

Negotiations on a Development Exchange Agreement (**DEA**) will begin with the first ranked proposer among the top three proposals. The **DEA** is the agreement between **TxDOT** and the **PRIVATE ENTITY** for construction of the **PROJECT**. In the event a mutually agreeable **DEA** cannot be reached, negotiations will be successively initiated with the second ranked and then third ranked proposer, if necessary.

In the event there are less than three proposals, **TxDOT** reserves the right to initiate negotiations with the first ranked. If a mutually agreeable **DEA** cannot be accomplished with the first ranked proposer, it will continue to the next proposal. **TxDOT** reserves the right to negotiate a **DEA** in the event there is only one proposal and **TxDOT** finds it meritorious.

The successful proposal will be the one that provides the best quality and quantity, the shortest completion time, as well as exceptional qualifications, key personnel, cost and best overall value. A recommendation will be made to the **TxDOT** Commission for award of a **DEA** to the successful proposer.

TxDOT reserves the right to withdraw this RFP at any time without compensation to any proposer prior to approval of an award by the Commission.

The RFP submittal must include the (1) Letter of Interest and Addendum Acknowledgement , (2) a PROJECT Development Plan, (3), a Statement of Qualifications from the **PRIVATE ENTITY**, (4) a Preliminary **PROJECT** Cost Estimate, (5) A Statement of Financial Qualifications, (6) State of Texas HUB Subcontracting Plan Commitment, and the (7) Written Confirmation (Paragraph 7, Page 9). TxDOT is particularly interested in those which reflect timely, functional and cost effective development plans to accomplish the construction of the structures. The successful proposal will be the one that provides the best value based on desired Project work, best quality and quantity, the shortest completion time, as well as exceptional qualifications, key personnel and cost.

Multiple proposals from individual proposers will be accepted, but each proposal must be submitted separately. Any and all proposals submitted may not be altered in any manner; any alterations will cause the proposal to be rejected.

TxDOT reserves the sole right to terminate this process, to not award the RFP, and to cancel or modify this solicitation process at any time. In no event will the State of Texas, **TxDOT** or any of their respective agents, representatives, consultants, directors, officers, or employees be liable for, or otherwise be obligated to reimburse, the costs incurred in preparation of this RFP, or any related costs. The prospective **PRIVATE ENTITY** shall bear all costs incurred in the preparation and presentation of their submittals. The RFP submittals will become the property of **TxDOT**.

RFP SUBMITTAL DEADLINE AND DELIVERY LOCATION

Sealed RFP submittals **("TxDOT PROPERTY EXCHANGE FORT WORTH DISTRICT FACILITIES")** must be received and time stamped by **2:30 PM Local Time, Tuesday, November 9, 2010** Sealed RFP submittals will only be received at the following location:

TEXAS DEPARTMENT OF TRANSPORTATION
FORT WORTH DISTRICT HEADQUARTERS
2501 SW Loop 820; Fort Worth, Texas 76133
FRONT DESK (817) 370-6500
ATTN: Tommy Johns

It is the sole responsibility of the **PRIVATE ENTITY** to ensure that a sealed RFP submittal for each proposal arrives at the above location, by the specified deadline regardless of the method chosen by the **PRIVATE ENTITY** for delivery. A faxed or electronically transmitted RFP submittal will **NOT** be accepted.

Sealed RPF submittal must be received/time stamped by
TUESDAY, NOVEMBER 9, 2010
BY
2:30 PM, LOCAL TIME

DESCRIPTION OF PROJECT

TxDOT is issuing this **REQUEST FOR PROPOSAL** to select from prospective qualified firms (**PRIVATE ENTITY)**, that can complete the design, construct new offices, shops, equipment storage buildings and other facility-support structures on state-owned property in the cities of Fort Worth, Tarrant County, Mineral Wells, Palo Pinto County, and Hood/Somervell Counties, Texas (**PROJECT**). The **PROJECT** is to be funded by exchanging a property in Arlington with an appraised value of **$12,003,000 ("as is"),** and any different options the **PRIVATE ENTITY** submits for consideration as part of their proposal, but it must include the proposed exchange value and either provide proposed modified scope of work and/or detail the amount of funding necessary to complete the **PROJECT**.

A. PROJECT SITES

The new improvements proposed for construction **(PROJECT**) will be on the Fort Worth district headquarters campus, an unimproved site on the Hood and Somervell Counties boundary line, and the current Mineral Wells Maintenance site.

B. DEVELOPMENT REQUIREMENTS

The **PRIVATE ENTITY** will be responsible for certain improvements on the sites consisting of the base building elements, interior improvements, and site improvements, the scope of which is outlined in the Attachments. The attachments include the drawings and specifications prepared by TxDOT that establish in detail the quality and quantity levels of materials and systems required for the **PROJECT.** The site work consists of sidewalks, driveways, parking areas, landscaping and related improvements as described in the attachments, and any change orders thereto. In general, the improvements include, but are not limited to, site clearing, grading, surface parking, new buildings, landscaping and associated infrastructure. All materials and improvements constructed are to be inspected and approved by **TxDOT.** Permits shall be obtained for utility connections at the property lines and inspected by local inspection authorities. The **PRIVATE ENTITY** shall be responsible for obtaining and paying all utility permits and fees required by local jurisdictions. Building permits are not required, and inspections shall not be conducted by local authorities, on state property.

The **PRIVATE ENTITY** will be responsible for site improvements, construction administration and management including all aspects of the Project's development and quality assurance for construction, to ensure the success of the entire **PROJECT** through final completion **(Closeout and Warranties); TxDOT** reserves the right to have staff or a third-party consultant provide on-site construction administration services for quality assurance.

The **PROJECT** must comply with the latest editions of the following building codes and regulations: local building codes, ADA (TAS), IBC, UMC, UPC, NEC, NFPA, EPA, TCEQ, TDSHS, and State Energy Code. All requirements pertaining to the preparation and approval of any environmental documents, permits, water quality, and public involvement issues must be in accordance with state and federal regulations, policies and procedures.

The **PROJECT** shall be design-enhanced and constructed in accordance with U.S. Green Building Council's Leadership in Energy and Environmental Design (LEED) guidelines to achieve a comparable "CERTIFIED" rating of a minimum of 40 LEED credits. The registration, documentation, and receipt of LEED Certification from USGBC are not required. However, a matrix defining the designed and installed materials, components, and systems to achieve this certification is required at the end of the Design Development Phase and at the Final Completion of construction. Provide a letter, signed by the Project LEED AP, certifying that the project achieves minimum LEED credits.

The **PROJECT** shall comply with the *Facility Design Standards and Production Guidelines*, found in the TxDOT Project Documents. If any of the facility design standards are in conflict with attaining LEED Certification, the standard(s) may be waived.

C. SCOPE OF WORK

The **PROJECT** includes the construction of new buildings based on the project documents provided by **TxDOT** located in the attachments. The **PROJECT** will include the following work, in order of priority:

1. Design adaptation and construction of South Tarrant County Area Engineer and Maintenance Facility, Fort Worth District Headquarters.
2. Design adaptation and construction of Glen Rose Maintenance Facility (SH 144 on Hood/Somervell County line)
3. Design adaptation and construction of Mineral Wells Maintenance Facility. Associated demolition required.
4. Design and renovation of the existing laboratory building at the Fort Worth District Headquarters. Associated demolition required.

A DETAILED DESCRIPTION OF THE SCOPE OF WORK FOR EACH PROPERTY IS PROVIDED IN THE TxDOT PROJECT DOCUMENTS LOCATED IN THE ATTACHMENTS.

The **PRIVATE ENTITY** may engage qualified firms to provide the necessary professional services required to complete the design and construct the described **PROJECT** facilities.

TxDOT will provide the **PRIVATE ENTITY**, free of charge, five (5) complete sets of construction documents. All drawings and specifications and copies are and shall remain **TxDOT PROPERTY**.

D. FINANCIAL PLAN AND QUALIFICATIONS

The **PRIVATE ENTITY** that can demonstrate the qualifications to deliver the **PROJECT** as described herein and provide the best value and product for the State of Texas, will be awarded a contract in the form of a **DEA**. The selected **PRIVATE ENTITY** will enter into a **DEA** with **TxDOT**, an agency of the State of Texas. The **PROJECT** must be free and clear of any and all liens and debts.

E. MILESTONE DATES

The following dates are provided to assist the **PRIVATE ENTITY** in scheduling and planning

• Issue RFP	SEPTEMBER 9, 2010
• Pre-Proposal Meeting	October 7, 2010
• RFP Deadline (60 calendar days)	**NOVEMBER 9, 2010**
• Interviews with Top Ranked **PRIVATE ENTITY** (3 days)	NOVEMBER 16 -18, 2011
• Negotiate final DEA agreement	to DECEMBER 10, 2010
• **TxDOT** Commission (Award of Contract Approved)	DECEMBER 16, 2010
• ENTITY provides Bonds & Insurance	Late December
• Execute DEA (15 calendar days) *	JANUARY 3, 2011 **
• Issue Notice to Proceed (15 Working Days)	JANUARY 18, 2011
• Substantial Completion (18 months/545 Calendar Days)	JULY 2012
• Transfer Property (30 Calendar Days)	SEPTEMBER 2012

***** DEA will not be signed until Bonds & Insurance are approved
****** Zoning process may begin

F. DEVELOPMENT AND EXCHANGE AGREEMENT (DEA) AND CLOSING

When **TxDOT** informs the successful **PRIVATE ENTITY** of approval by the Transportation Commission, the **ENTITY** will be expected to deliver the required performance and payment bonds from a qualified surety, with stated coverage of insurance, receive **TxDOT** approval, and execute the Agreement within 15 calendar days. In addition, the **PRIVATE ENTITY** is required to provide and maintain, until the Work covered in the **DEA** is completed and accepted by **TxDOT**, the minimum insurance coverage and amounts for (a) worker's compensation, (b) commercial general liability, (c) business automobile and (d) builder's risk insurance, as detailed and required in the **DEA**. Insurance and Bond forms will be provided by **TxDOT**. The **PRIVATE ENTITY** that is awarded the contract will be allowed to access the exchange property site prior to completion of construction of the **PROJECT** or transfer of title of the exchange property. The access will be allowed only upon written approval from the Fort Worth District Engineer, and will be for demolition/clearing only. The contractor may **not** build on the property to be exchanged until the deed has been delivered in exchange for completion of the **PROJECT** and compliance with all terms and conditions of the **DEA** has been met. The demolition/clearing will be at the **PRIVATE ENTITY'S** risk, at no cost to **TxDOT**, and will not affect any other remedies **TxDOT** may have in the event the **PRIVATE ENTITY** defaults.

The developer/contractor will be liable for any respective property damages and injuries to third parties, the public, and **TxDOT's** property and employees, and will indemnify and hold harmless **TxDOT** and its employees from any third party claims caused by the developer/contractor during the demolition/clearing of the subject improvements.

The **DEA** and all related closing documents will be held in escrow at a title company approved by the department, until all proposed **PROJECT** buildings and site improvements are approved and accepted by **TxDOT**. Final closing will occur upon completion and acceptance of all proposed improvements and closeout documents.

The exchange value of **TxDOT PROPERTY** is as stated in the Introduction.

G. POINT OF CONTACT

TxDOT designates the following person, as its representative and Point-of-Contact for this RFP.

All interested parties in this **PROJECT** shall restrict contact with other **TxDOT** staff and direct all questions regarding this RFP to:

TxDOT Dallas District Headquarters
4777 East U.S. Highway 80, Mesquite, Texas 75150.
Mr. Tommy Johns, (214) 320-6635
FAX: (214) 320-6117

H. CONCLUSION:

In conclusion, the facilities constructed as a result of this **PROJECT** should serve to support and provide for **TxDOT** a comfortable, safe, durable, cost-effective, energy-efficient, environmentally-sensitive, and aesthetically-appealing workplace.

The **PRIVATE ENTITY** is encouraged to pursue enhancements to the "prototype" design that will upgrade the facility to be more conservation-oriented in the use of natural resources and energy, including water-conservation measures, passive and active energy-conservation measures, the use of recycled materials, and the use of recyclable materials.

LEED "Certified" must be achieved, as stated in the INSTRUCTIONS AND PROPOSAL REQUIREMENTS.

INSTRUCTIONS AND PROPOSAL REQUIREMENTS

A. INSTRUCTIONS

Each Proposal shall be submitted in a separate sealed envelope or package and identified with the deadline date and RFP number (as they appear on the cover sheet) in the lower left-hand corner, the name and address of the **PRIVATE ENTITY**. If this information is submitted past the deadline, it will be returned unopened to sender to the return address indicated on the envelope.

1. Submit five (5) copies of the Proposal on letter (8½ x 11) sized white paper and spiral bound with all pages sequentially numbered and in a sealed package. Ring binders are not acceptable.
2. If the submission is sent through the mail or other delivery system, the sealed envelope or box shall be enclosed in a separate envelope marked “PROPOSAL ENCLOSED”.
3. Any additional information may be submitted in a separate document marked "Appendix".
4. All Exhibits included in the Proposal shall be in the same envelope or box. Clearly identify each separate item with the **PRIVATE ENTITY’S** name and **PROJECT** name and number.
5. The Proposal shall be sealed with the financial plan and cost estimate as described in the RFP in a separate envelope within the submittal. **ALL CONFIDENTIAL FINANCIAL INFORMATION** should be clearly labeled on each proposal.
6. Receipt of all Addenda to this RFP, if any, must be acknowledged by attaching a signed copy of each Addendum to the RFP submittal. All Addenda shall become part of the requirements of this RFP. Failure to acknowledge receipt of an Addendum will result in rejection of the RFP submittal. **All Addenda will be posted at same websites as the RFP http://www.txdot.gov/mnt/contract/rfp.htm.**
7. All materials submitted will become the property of **TXDOT**.
8. Promptly notify **TxDOT** of all conflicts, errors, ambiguities, and discrepancies, which the **PRIVATE ENTITY** has discovered in the RFP.

TxDOT will not bear liability for any costs incurred in the preparation and submission of any RFP submittal. **TxDOT** is not authorized to compensate participants who submit proposals.

TxDOT reserves the right to request further documentation or information, and to discuss an RFP submittal for any purpose in order to answer questions or to provide clarification.

Documents will not be issued to subcontractors or suppliers.

TxDOT nor any consultant that has been hired for this PROJECT or who has been involved in the preparation of the Proposal documents assumes any responsibility for errors or misinterpretations resulting from the use of incomplete sets of the Proposal documents.

Your RFP submittal may not be changed, amended or modified after the submittal **DEADLINE**.

B. REQUIREMENTS FOR PROPOSAL

The Proposal must include, at a minimum, the following information:

1. LETTER OF INTEREST AND ADDENDUM ACKNOWLEDGEMENT

The Letter of Interest and Addendum Acknowledgement is included in the Proposal.

a) All blanks on the form must be completed by printing.
b) In addition to signatures, names must be typed or printed.
c) The address and telephone number for communications regarding the proposal must be shown.

2. PROJECT DEVELOPMENT PLAN

Provide a synopsis of the **PRIVATE ENTITY's** implementation plan to complete the design and construct the **PROJECT**. Address each project location separately in the implementation plan.

SITE DEVELOPMENT: It is the responsibility of each **PRIVATE ENTITY** to submit with the proposal any general, local, and site conditions that may affect cost, progress, or performance of the work, considering federal, state, and local laws and regulations that may affect cost, progress, and performance of the work.

ADDITIONAL REQUIREMENTS:

A. An area will be designated on TxDOT's property for construction facilities, construction equipment, or storage of materials and equipment of the **PRIVATE ENTITY**, if necessary.
B. Before submitting a proposal each **PRIVATE ENTITY** may conduct additional or supplementary examinations, investigations, explorations, tests, studies, or collect data concerning conditions (surface, subsurface, and underground facilities) at or contiguous to the site needed to determine cost, progress, or performance of the work, or to determine means, methods, techniques, sequences, or procedures of construction to be employed. Coordinate any such activity with TxDOT point-of-contact, Page 5.
C. Submit an implementation plan, and schedule based upon current levels of information, including construction start dates, anticipated completion dates, final acceptance dates, and other major milestones.
D. The **PRIVATE ENTITY** shall include a **PROJECT** schedule identifying the projected completion dates of all improvements and date of delivery. Completion of improvements in less than 545 days will be considered more favorably in the proposal selection. If the construction dates can be accelerated or need to be extended, please note this on your **PROJECT** Development Plan. Also include the schedule that will be incorporated into the Agreement. (See previously referenced Milestone Dates).

3. STATEMENT OF QUALIFICATIONS AND KEY PERSONNEL

A. Demonstrate through clear documentation that the **PRIVATE ENTITY** possesses the qualifications and experience necessary to perform the work. Clearly present the **PRIVATE ENTITY's** key personnel experience, including success in delivering similar projects of this kind, complexity and magnitude. Identify LEED-certified built projects. Demonstrate that the key personnel have the knowledge, ability and experience to deliver the **PROJECT** on time, within the scope, and on budget. Include all potential developer responsibilities demonstrating experience of the team members, management team and key personnel.

B. The **PRIVATE ENTITY** must demonstrate that sufficient qualified and knowledgeable staff (both prime and sub-providers) are available, or will be available upon commencement of the **DEA**.
C. **TxDOT** expects the firms to provide adequate information about the **PRIVATE ENTITY** organizational structure and all designated key personnel who will be involved in the **PROJECT**. Provide proof of certification for LEED professionals.
D. All necessary services and service providers and HUBs ancillary to the approval of the **DEA** will be considered subcontractors for the purpose of the proposal.

4. PRELIMINARY PROJECT COST ESTIMATE

Each proposal shall provide a detailed cost estimate for the project administration, site development, design and construction costs, and all other costs associated with the work for the total **PROJECT**, including closing costs. Include $500,000.00 allowance for use in resolving unforeseen issues or conditions during construction. This allowance is non-site-specific, is in addition to other allowances included in this document, and applies to the entire **PROJECT**. Do not include any part of this allowance on the site-specific Preliminary Cost Estimate Form. Submit forms (Schedules of Value) for all parts of the **PROJECT** with your proposal, and provide the completed **Summary of Project Costs,** adding the above-stated allowance, with all other additional costs.

5. FINANCIAL QUALIFICATIONS

The PRIVATE ENTITY is responsible for identifying any information it believes is entitled to confidentiality under the Public Information Act, Texas Government Code, Chapter 552, by placing the word "CONFIDENTIAL" on the applicable pages. Provide a proposed financial plan based on the level of available **PROJECT** information, including proposed sources and uses of funds for the **PROJECT**. ***Provide as a minimum the following:***

A. Current financial statements of **ENTITY** and equity members for the three most recent fiscal years, audited by a Certified Public Accountant, in accordance with generally accepted accounting principles (GAAP). Financial statements must be certified as true, correct and accurate by the Chief Financial Officer or Treasurer of the **ENTITY**.

1. Opinion Letter (if audited financial statements are provided). If **ENTITY** is a joint venture or partnership, separate letters for the individual equity participants are acceptable, as is a single letter covering all equity participants.
2. Balance sheet.
3. Income statement.
4. Statement of changes in cash flow.

B. Information on any material changes in financial condition for each equity owner for the past three years. Material changes include, but are not limited to:

1. Default or bankruptcy involving the **ENTITY** or related business entity within the same corporation.
2. The sale, merger, or acquisition of 10% or a substantial shareholder equity that in any way involves or affects the entity providing goods or services in this proposal or a related business entity within the same corporation or parent corporation.
3. A change in tangible net worth of 10% of the shareholders' equity. Inability to meet conditions of loan or debt covenants by the affected **ENTITY**, a related business unit or parent corporation which will require a waiver or modification of agreed financial ratios.
4. Coverage factors or other loan stipulation.
5. Additional credit support from shareholders or other third parties. If no material changes have occurred, provide a letter from the Chief Financial Officer or Treasurer so certifying.

C. Provide a letter from the Chief Financial Officer or Treasurer so certifying or provide written statements from financial institutions of the ability to obtain a loan sufficient to complete the **PROJECT** and repay the loan prior to closing or otherwise obtain a release of liens.

D. **PRIVATE ENTITY** must identify and explain any significant anticipated legal issues which must be resolved in order to carry out the PROJECT and its obligations.

E. The **PRIVATE ENTITY** certifies that the lead or managing **ENTITY** is not currently delinquent in the payment of any taxes or certain debts owed in accordance with Texas Government Code, Section 2252.903, concerning contracting with persons who have debts or delinquencies.

F. The **PRIVATE ENTITY** certifies that none of its officers or principals owns delinquent child support payments as required by Texas Family Code §231.006. The **DEA** may be rescinded or terminated and payment may be withheld if this certification is not accurate.

G. The **PRIVATE ENTITY** certifies that it will provide assurance of non-discrimination in the **DEA** as required by Title VI of the Civil Rights Act of 1964 and will abide by any other applicable federal requirements.

6. STATE OF TEXAS HUB SUBCONTRACTING PLAN COMMITMENT *(MANDATORY)*

A. Historically Underutilized Business (HUB) Requirement – It is the policy of **TXDOT** as an agency of the State to promote and encourage contracting and subcontracting opportunities for Historically

Underutilized Businesses (HUB) in all contracts, to create a level playing field of which HUBs can compete fairly, to ensure non–discrimination on the basis of race, color, national origin, or gender in the award and administration of contracts, to remove barriers to the participation of HUBs in contracts, and to assist in the development of firms that can compete successfully in the market place outside the HUB program. Consequently, the HUB requirements of **TXDOT**'s HUB Program will apply to this **PROJECT**. The overall HUB goal for the **PROJECT** has been established at 26.1%. Reference Historically Underutilized Business Subcontracting Plan (HUB) forms.

B. For more details regarding HUB Program and requirements please visit the Texas Comptroller of Public Accounts website **www.cpa.state.tx.us.**

7. WRITTEN CONFIRMATION

The site is located in the City's Entertainment District – Collins Corridor Sub-District. The Arlington City Council requires the proposed development to comply with Section 9-1600 – Entertainment District "ED" Overlay District of the City's Zoning Ordinance. The Collins Corridor Sub-District serves as a gateway to the City's Entertainment District given its direct access from IH30. As such, any proposed development is required to meet high quality standards in place for the Entertainment District as a whole. The Arlington City Council requires a high-density mixed-use development with multi-story buildings up to Collins Street defined by enhanced streetscape and pedestrian areas, quality materials, attention to architectural details, and strong connections to the rest of the District to implement the City of Arlington's Zoning Ordinance for this western gateway property.

The **ENTITY** is required to submit a written confirmation that the **ENTITY** has discussed the **ENTITY's** plan, outlining the proposed uses of the exchanged property, with the City of Arlington Community Development and Planning Office, Deputy City Manager, or City Manager. The written confirmation shall document the date, time, and City personnel who were included in the discussion. The **ENTITY** is advised that the proposed development of the property will be required to meet the Entertainment District standards in order to obtain the necessary zoning and approvals from the Arlington City Council per applicable ordinances and procedures.

For information and assistance regarding compliance with the Zoning Ordinance for the City of Arlington, prospective Proposers should contact Ms. Fiona M. Allen, P.E., R.S., Deputy City Manager at 817-459-6100 or by email at Fiona.Allen@arlingtontx.gov.

EVALUATION CRITERIA

The Proposal must include the following items to be evaluated based on the weighted percentage:

1. Letter of Interest and Addendum Acknowledgement (if applicable)
2. PROJECT Development Plan **(25%)**
3. Statement of Firms Qualifications **(25%)**
4. Preliminary PROJECT Cost Estimate **(30%)**
5. Financial Qualifications **(20%)**

TxDOT reserves the right to request additional information as it deems necessary to assist in the evaluation of any proposal and to establish the responsibility, qualifications, and financial ability of the **PRIVATE ENTITY**, the proposed professionals, subcontractors, suppliers and other individuals and entities who will perform the work in accordance with RFP. The three highest scored may be interviewed. Participation in the interview phase is not assurance that any **PRIVATE ENTITY** will be awarded the **DEA**.

TxDOT may discuss or negotiate all elements of the proposal with a **PRIVATE ENTITY**. As part of such discussions or negotiations, **TxDOT** may permit the interviewed **PRIVATE ENTITY** to revise their respective proposal in order to obtain the best offer. **TxDOT** may not disclose any information derived from the proposals submitted from competing offers in conducting such discussions.

The selection, ranking and qualifying will be determined by an evaluation team including the following primary **TxDOT** personnel or other staff as assigned. **TxDOT** reserves the right to substitute a member of this evaluation team.

Mr. John Warrick, RA (Chairman)
Maintenance Division – Facilities Management Section
150 East Riverside Drive,
Austin, TX 78701

Mr. Richard Schiller, P.E.
Director of Maintenance
Fort Worth District
2501 SW Loop 820
Fort Worth, TX 76133

Mr. Tommy Johns, RA, RID
North Region Facilities Management
4777 East U.S. Highway 80
Mesquite, TX 75150

The evaluation team's key responsibility is to review each proposal, including all material submitted and to determine the top Proposals by ranking them in sequential order with the first-ranked being initially considered the best offer to the state.

The top-ranked firm will be contacted in writing **5 working days** from the closing of the RFP.

If the evaluation team determines that it is unable to reach a satisfactory agreement with the "first-ranked", then it will terminate discussions and proceed to the next ranked in order of selection ranking until satisfactory terms for the **DEA** are achieved or all proposals have been rejected.

TxDOT will not disclose any information derived from the proposals before the **TxDOT** Commission awards a **DEA**.

Following the conclusion of successful negotiations, a recommendation for awarding the **DEA** will be placed on the agenda for the next regularly scheduled meeting of the **TxDOT** Commission.

TXDOT RESERVATION OF RIGHTS

In connection with the RFP and **PROJECT**, **TxDOT** reserves all rights (which rights may be exercised by **TxDOT** in its sole discretion) available to it under the Transportation Code and other applicable law, including without limitation, and with or without cause and with or without notice, the right to:

A. Cancel this RFP in whole or in part at any time prior to the execution of a contract by **TxDOT**, without incurring any cost obligations or liabilities or extend the RFP submittal Due Date.
B. Issue addenda, supplements, and modifications to this RFP.
C. Revise and modify, at any time before the RFP Due Date, the factors and/or weights of factors **TxDOT** will consider in evaluating RFP submittals and to otherwise revise or expand its evaluation methodology as set forth herein.
D. Investigate the qualifications of any **PRIVATE ENTITY** under consideration and require confirmation of information furnished by a **PRIVATE ENTITY**.
E. Require additional information from a **PRIVATE ENTITY** concerning contents of its RFP submittal and/or require additional evidence of qualifications.
F. Waive or permit corrections to data submitted with any response to this RFP until such time as **TxDOT** declares in writing that a particular stage or phase of its review of the responses has been completed or closed.
G. Reject any and all submittals, responses and RFP submittals received at any time.
H. Terminate evaluations of responses received at any time.
I. Appoint evaluation committees to review RFP submittals or responses, make recommendations and to seek the assistance of outside technical experts and consultants in RFP submittal evaluation.
J. Hold interviews and conduct discussions and correspondence with one or more of the **PRIVATE ENTITY'**s responding to this RFP to seek an improved understanding and evaluation of the responses to this RFP.
K. Seek or obtain data from any source that has the potential to improve the understanding and evaluation of the responses to this RFP.
L. Disclose information contained in an RFP submittal to the public as described herein, or referenced in this RFP.
M. Authorize **PRIVATE ENTITY** to substitute firms and/or key personnel until such time as **TxDOT** declares in writing that a particular stage or phase of its review has been completed and closed.
N. Waive minor deficiencies in an RFP submittal, accept and review a non-conforming RFP submittal or seek clarifications or supplements to an RFP submittal.
O. Disqualify any **PRIVATE ENTITY** which changes its RFP submittal without **TxDOT** authorization.
P. Exercise any other right reserved or afforded to **TxDOT** under this RFP.
Q. **TxDOT** reserves the right to modify the process in its sole discretion to address applicable law and/or the best interest of **TxDOT** and the State of Texas.
R. **TxDOT** shall not, under any circumstances, be bound by or liable for any obligations with respect to the **PROJECT** until such time (if at all) a **DEA** has been awarded and all approvals obtained in form and substance satisfactory to **TxDOT** have been executed and authorized by **TxDOT**.

Letter of Interest and Addendum Acknowledgment

CBC4704-00-837DFW

PRIVATE ENTITY:_____ Response Date:_____

Texas Department of Transportation
Dallas District Headquarters
4777 East US-80
Mesquite, Texas 75150

The undersigned (**"PRIVATE ENTITY"**) submits the following information in response to that certain Request for Proposal dated **September 9, 2010,** (and as amended by any **RFP Addenda**), issued by the Texas Department of Transportation (**"TxDOT"**) for a real property exchange for capital improvements for construction of new office, shop, equipment storage buildings, and other facility support structures, hereinafter referred to as the Project (**"PROJECT"**)**.**

Enclosed, and by this reference incorporated herein and made a part of this RFP, the following:

1. Letter of Interest and Addendum Acknowledgment
2. PROJECT Development Plan
3. Statement of Firms Qualifications
4. Preliminary PROJECT Cost Estimates
5. Financial Qualifications
6. State of Texas HUB Subcontracting Plan Commitment (Mandatory)
7. Written Confirmation

The **PRIVATE ENTITY** acknowledges receipt, understanding and full consideration of all materials posted on **TXDOT**'s website **http://www.txdot.gov/mnt/contract/rfp.htm** and the notice of this RFP at **http://esbd.cpa.state.tx.us** with respect to the PROJECT and any Addenda.

The **PRIVATE ENTITY** understands that **TxDOT** is not bound by and may reject any and all RFP submittals that it receives.

The **PRIVATE ENTITY** further understands that all costs and expenses incurred by it in preparing this RFP and participating in this process will be borne solely by the **PRIVATE ENTITY**, and that the RFP submittal materials will become the property of **TxDOT** and will not be returned. And further agrees that **TxDOT** will not be responsible for any errors, omissions, inaccuracies or incomplete statements in this RFP. It accepts all terms of the RFP submittal process by signing this Letter of Interest and Addendum Acknowledgement and making the RFP submittal.

This RFP and subsequent award, if any, shall be governed by and construed in all respects according to the laws of the State of Texas. The **PRIVATE ENTITY** agrees to venue in a court of competent jurisdiction in Travis County in the event litigation ensues between the **PRIVATE ENTITY** and **TxDOT** regarding any **DEA** that may be awarded pursuant to this RFP.

PRIVATE ENTITY Name

Primary business address:

(No.) (Street) (Floor or Suite)

(City) (State or Province) (ZIP or Postal Code) (Country)

State or Country of Incorporation/Formation/Organization

Signature block for corporation or limited liability company:

By: _____

Print Name: _____

Title: _____

Signature block for partnership or joint venture:

By: _____

Print Name: _____

Title: _____

Add signatures of additional general partners or members as appropriate.

Signature block for partnership or joint venture:

By: _____

Print Name: _____

Title: _____

Signature block for attorney in fact:

By: _____

Print Name: _____

Attorney in Fact: _____

Addendum Acknowledgment

Each proposer is required to acknowledge receipt of an addendum issued for each specific PROJECT. This page is provided for the purpose of acknowledging an addendum.

Failure to acknowledge receipt of an addendum will result in the proposal not being reviewed.

ADDENDUM NO. 1_____

ADDENDUM NO. 2 _____

ADDENDUM NO. 3 _____

In addition, the **PRIVATE ENTITY** by affixing their signature (s) to the Letter of Intent is acknowledging that they have taken the addendum(s) into consideration when preparing their proposal(s) and that the information contained in the addendum will be included in the **DEA**, if awarded by the **TxDOT** Commission.

SCHEDULE OF VALUES

PRELIMINARY COST ESTIMATE FORM

PROJECT/CONTRACT: CBC4704-00-837DFWDFW
PROJECT NAME: Property Exchange Fort Worth District – Various Locations
COUNTY: Tarrant
CITY/LOCATION: Fort Worth District Headquarters: Area Eng. and Maint. Facility
PRIVATE ENTITY NAME:

Note: Allowances will be based on Construction Documents

ITEM NO.	DESCRIPTION OF WORK	SCHEDULED VALUE
1	Mobilization	$
2	Temporary Facilities	$
3	Site Work	$
4	Utilities	$
5	Erosion Control	$
6	Paving, curb and gutter	$
7	Fencing with gates	$
8	Landscaping (Allowance)	$
9	Office Building	$
10	Shop/Storage Building	$
11	Truck Wash Bay	$
12	Covered Bulk Storage	$
13	Covered Truck Parking/Containment (Allowance)	$
14	Systems Furniture (Allowance)	$
15	Vehicle Lift (Allowance)	$
	TOTAL ESTIMATED PROJECT COST	$

THIS FORM MUST BE FILLED OUT FOR PROPOSAL

SCHEDULE OF VALUES

PRELIMINARY COST ESTIMATE FORM

PROJECT /CONTRACT: CBC4704-00-837DFWDFW
PROJECT NAME: Property Exchange Fort Worth District – Various Locations
COUNTY: Hood/Somervell
CITY/LOCATION: Glen Rose Maintenance Facility
PRIVATE ENTITY NAME:

Note: Allowances will be based on Construction Documents

ITEM NO.	DESCRIPTION OF WORK	SCHEDULED VALUE
1	Mobilization	$
2	Temporary Facilities	$
3	Site Work	$
4	Radio Tower (Allowance)	$
5	Utilities	$
6	Erosion Control	$
7	Paving, curb and gutter	$
8	Fencing with gates	$
9	Landscaping (Allowance)	$
10	Office Building	$
11	Shop/Storage Building	$
12	Truck Wash Bay	$
13	Covered Bulk Storage	$
14	Vehicle Lift (Allowance)	$
15	Fuel Station	$
16	New Asphalt Tanks & Truck Parking (Allowance)	$
17	Systems Furniture (Allowance)	$
	TOTAL ESTIMATED PROJECT COST	$

THIS FORM MUST BE FILLED OUT FOR PROPOSAL

SCHEDULE OF VALUES

PRELIMINARY COST ESTIMATE FORM

PROJECT /CONTRACT: CBC4704-00-837DFW
PROJECT NAME: Property Exchange Fort Worth District – Various Locations
COUNTY: Palo Pinto
CITY/LOCATION: Mineral Wells Maintenance Facility
PRIVATE ENTITY NAME:

Note: Allowances will be based on Construction Documents

ITEM NO.	DESCRIPTION OF WORK	SCHEDULED VALUE
1	Mobilization	$
2	Portable Building (TxDOT Personnel)	$
3	Temporary Facilities	$
4	Asbestos Abatement	$
5	Demolition	$
6	Site Work	$
7	Radio Tower (Allowance)	$
8	Utilities	$
9	Erosion Control	$
10	Paving, curb and gutter	$
11	Fencing with gates	$
12	Landscaping (Allowance)	$
13	Office Building	$
14	Shop/Storage Building	$
15	Truck Wash Bay	$
16	Fuel Station	$
17	Covered Bulk Storage	$
18	New Asphalt Tanks & Truck Parking (Allowance)	$
19	Remove Existing Asphalt Tanks	$
20	Systems Furniture (Allowance)	$
	TOTAL ESTIMATED PROJECT COST	$

THIS FORM MUST BE FILLED OUT FOR PROPOSAL

SCHEDULE OF VALUES

PRELIMINARY COST ESTIMATE FORM

PROJECT /CONTRACT: CBC4704-00-837DFW
PROJECT NAME: Property Exchange Fort Worth District – Various Locations
COUNTY: Tarrant
CITY/LOCATION: Fort Worth District Headquarters: Renovation of Laboratory Building
PRIVATE ENTITY NAME:

Note: Allowances will be based on Construction Documents

ITEM NO.	DESCRIPTION OF WORK	SCHEDULED VALUE
1	Mobilization	$
2	Temporary Facilities	$
3	Asbestos Abatement	$
4	Demolition	$
5	Site Work	$
6	Erosion Control	$
7	Fencing with gates	$
8	Landscaping (Allowance)	$
9	Laboratory Building	$
10	Systems Furniture (Allowance)	$
	TOTAL ESTIMATED PROJECT COST	$

THIS FORM MUST BE FILLED OUT FOR PROPOSAL

SUMMARY OF PROJECT COSTS

Property Exchange
Fort Worth District
Request for Proposal
CBC4704-00-837DFW

Schedules of Values

Area Engineer and Maintenance Facility (FTW HQ) _____

Maintenance Facility (Glen Rose) _____

Maintenance Facility (Mineral Wells) _____

Renovation of Lab Building (FTW HQ) _____

TOTAL _____

Bonds _____

Insurance _____

Preconstruction (design, eng, etc.) _____

General Contractor Overhead & Profit _____

Overall Project Management Admin. _____

Allowance _____

Other _____

GRAND TOTAL _____

Comments:

HUB SUBCONTRACTING PLAN (HSP)

COMMITMENT

In accordance with Gov't. Code §2161.252, the contracting agency has determined that subcontracting opportunities are probable under this contract.

NOTE: Responses that do not complete this HSP Plan Commitment shall be rejected.

The HUB Program promotes equal business opportunities for economically disadvantaged persons to contract with the State of Texas in accordance with the goals specified in the State of Texas Disparity Study. The HUB goals defined in 34 TAC §20.13 are: *11.9 percent for heavy construction other than building contracts, 26.1 percent for all building construction, including general contractors and operative builders contracts, 57.2 percent for all special trade construction contracts, 20 percent for professional services contracts, 33 percent for all other services contracts, and 12.6 percent for commodities contracts.*

TxDOT SPECIAL INSTRUCTIONS / ADDITIONAL REQUIREMENTS –

Texas Department of Transportation must receive this signed HUB Subcontracting Plan Commitment with the bid proposal to show that the bidding contractor has agreed to submit the entire plan and all documentation within 15 days after conditional contract AWARD as specified in the contract or proposal. A respondent must state whether it is a certified HUB.
(TAC Title 43, Part 1, Chapter 9, Subchapter D, Business Opportunity Programs, Rules §9.51 and §9.54) (1-7-10).

If the AWARDED contractor (Respondent) does not submit the entire plan and complete all requirements within 15 days, his AWARD will be rejected as failure to meet requirements - bid guarantee or bid bond will be forfeited and become the property of TxDOT, not as a penalty, but to compensate for costs to re-bid. This respondent will not be allowed to re-bid this project.

The HUB goal for all building projects for the Texas Department of Transportation is 26.1%. **It is highly recommended contractors contact, solicit bids and retain documentation from HUB subcontractors in preparation of the bid.**

SECTION 1 - RESPONDENT AND SOLICITATION INFORMATION

a. Respondent (Company) Name: _____ State of Texas VID # _____

Point of Contact: _____ Phone #: _____

b. Is your company a State of Texas certified HUB? ☐ - Yes ☐ - No

b. Solicitation (TxDOT Project Number): _____

SECTION 2 - SUBCONTRACTING INTENTIONS

After having divided the contract work into reasonable lots or portions to the extent consistent with prudent industry practices, the respondent must determine what portion(s) of work, including goods or services, will be subcontracted. Note: In accordance with 34 TAC §20.12., a "Subcontractor" means a person who contracts with a vendor to work, to supply commodities, or contribute toward completing work for a government entity. Check the appropriate box that identifies your subcontracting intentions:

☐ - YES. I will be subcontracting portion(s) of the contract.
(If YES, you will be required to submit a HUB Subcontracting Plan (HSP) with Sections 1 through 8 & 10 completed)

☐ - NO. I will not be subcontracting any portion of the contract, and will be fulfilling the entire contract with my own resources.
(If NO, you will be required to submit a HUB Subcontracting Plan (HSP) with Sections 1, 2, 9 and 10 completed.)

SECTION 3 - AFFIRMATION

As evidenced by my signature below, I affirm that I am an authorized representative of the respondent listed in SECTION 1, and that the information submitted is true and correct. Respondent understands and agrees that, if awarded this contract:

- The respondent agrees to submit the entire HUB Subcontracting Plan (HSP) and all documentation within 15 days after AWARD.
- The respondent must submit monthly compliance reports (Prime Contractor Progress Assessment Report – PAR) to TxDOT, verifying their compliance with the HSP, including the use/expenditures they have made to subcontractors. (The PAR is available at http://www.window.state.tx.us/procurement/prog/hub/hub-forms/progressassessmentrpt.xls).
- The respondent must seek approval from the contracting agency prior to making any modifications to their HSP. If the HSP is modified without the TxDOT's prior approval, respondent may be subject to debarment pursuant to Gov't. Code §2161.253(d).
- The respondent must, upon request, allow TxDOT to perform on-site reviews of the company's headquarters and/or work-site where services are to be performed and must provide documents regarding staff and other resources.

_____	_____	_____	_____
Signature	Printed Name	Title	Date

NOTE: This HSP Plan Commitment must be completed and signed for the Proposal to be read.

CHILD SUPPORT STATEMENT
FOR THE TEXAS DEPARTMENT OF TRANSPORTATION

Under Section 231.006, Texas Family Code, the **ENTITY** certifies that the individual or business entity named in this proposal is not ineligible to receive the specified grant, loan, or payment and acknowledges that this contract may be terminated and payment may be withheld if this certification is inaccurate.

THE REMAINING PORTION OF THIS PAGE LEFT BLANK INTENTIONALLY

Appraisal Information
IH30 and Collins Street - Arlington

TxDOT is the owner of certain property proposed for exchange at IH30 and Collins Street (FM 157), Arlington, Tarrant County, Texas.

Date of Inspection:	May 3, 2010
Property Rights:	Fee Simple
Land Area:	18.37 acres
Frontage/Access:	973 ft. on Collins Street; 269 ft. on Center Street; 1222 ft. on new I-30 frontage road; 1513 ft. on Ryan Plaza Drive
Shape:	Irregular
Zoning:	Not zoned *
Utilities:	Water, sanitary sewer, electricity, and telephone.
Floodplain:	None identified
Highest and Best Use:	Retail/commercial and/or mixed use development.
Removal of Existing:	No structures will be removed.
Traffic Pattern:	Collins Street: 2-way; Center Street: 2-way; Frontage Road: 1-way; Ryan Plaza Drive: 2-way.
Restrictions/Reservation:	None
Topography:	Slightly below grade of new frontage road. Terrain is level to gently sloping.
Easements:	Reference Survey
Reversions:	None
Encroachments:	None Noted
Environmental Hazards:	Reference Phase I Report
Endangered Species:	None Noted
Neighborhood:	Surrounding land usage is retail/commercial
Estimated Value of Improvements:	$0
Land Value Estimate:	$12,003,000
Estimated Value of Property:	$12,003,000

*** TxDOT** will not be involved in zoning issues. The **PRIVATE ENTITY** must negotiate zoning with municipal authorities.

Phase I Environmental Site Assessment
IH30 and Collins Street – Arlington

The following information is based on a Phase I Environmental Site Assessment Report prepared for the property located in the 1608 North Collins, Arlington, Tarrant County, Texas, in July 2009 by H2A Environmental, Ltd. The entire report is available for review by writing or contacting the Texas Department of Transportation, Maintenance Division or the Fort Worth District Point of Contact. (Reference Texas Open Records Act Request for Information.)

FINDINGS AND CONCLUSIONS
Review of historical documents shows that Texas Turnpike Authority or TxDOT has occupied the Property since the 1955 when construction of the Dallas Fort Worth Turnpike (what is now IH-30) and FM-157 was initiated. Prior to the construction of these roads and interchanges, the Property was a vacant field or was used for agricultural purposes. The Property has only one known record of any type of release to the environment or violation of environmental regulations. This release was a documented LPST site. The site was fully assessed and the case was closed by the Texas Water Commission (TWC) on June 4, 1992. Correspondence regarding this closure is presented in Appendix D. This site is currently listed as *Final Concurrence Issued; Case Closed* within the LPST database.

HISTORICAL ENVIRONMENTAL CONDITIONS
Interviews with knowledgeable personnel did not reveal any unknown environmental conditions or releases to the environment at the Property.

ON-SITE RECOGNIZED ENVIRONMENTAL CONDITIONS
Current operations at the Property as observed during the June 30, 2009 site walkthrough indicated that there are currently three potential RFCs. They are as follows:

- Improper drum storage of potentially hazardous materials (paint/heavy bridge stain and concrete curing compound);
- Improperly or incompletely lined concrete truck wash pits associated with concrete batch plant; and
- Small area of soil and vegetation staining associated with concrete curing compound.

The current occupant had not submitted the requested hazardous material storage plan or air permit associated with current operations. The findings and opinions of this ESA are based only on information available to H2A at the time of this report. Findings, conclusions, and opinions are limited by the availability of this information. An addendum can be added to this report if this information becomes available to H2A and alters the opinions and findings within this ESA.

OFF-SITE CONTAMINATION
None so noted.

Full environmental assessment available upon request from:
Tommy Johns, TxDOT; 4777 East U.S. Highway 80; Mesquite, TX 75150. 214-320-6635.

TXDOT PROPERTY Location Map

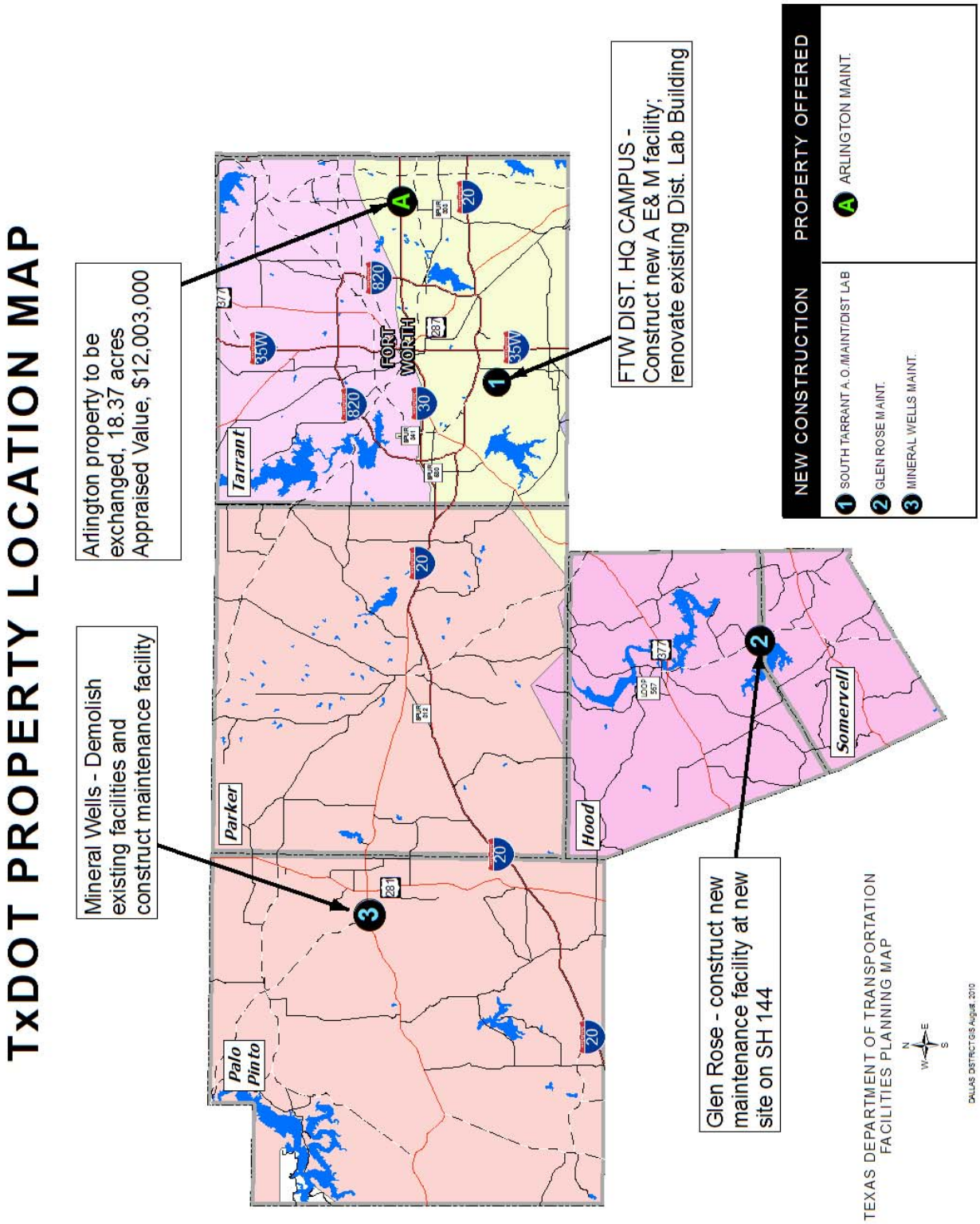

DEVELOPMENT AND EXCHANGE AGREEMENT

THIS PAGE LEFT BLANK INTENTIONALLY

INFORMATION AVAILABLE ONLY BY INTERNET OR BY DISC

http://www.txdot.gov/mnt/contract/rfp.htm

DEVELOPMENT AND EXCHANGE AGREEMENT
FOR
FORT WORTH DISTRICT

This **Development and Exchange Agreement (DEA)** between the Texas Department of Transportation (hereinafter referred to as "**TxDOT**") and _____ a (**State)** corporation (hereinafter referred to as "**Developer**" is entered into pursuant to Transportation Code, Section 201.1055, effective upon the date of execution by TxDOT's Executive Director.

RECITALS:

This **DEA** is authorized by the Texas Transportation Commission by Minute Order NO. 112403 dated August 26, 2010, in furtherance of a design and build award to the **Developer** for the exchange of property located at I-30 and Collins Road, Arlington, Tarrant County, with an appraised value of $12,003,000, more particularly described by metes and bounds in **Exhibit A** and pursuant to Transportation Code, Section §201.1055. The following improvements must be completed to the satisfaction of TxDOT in exchange for the properties:

- Construction of a new area engineer, maintenance building, and renovation of an existing building on department property located at 2501 Southwest Loop 820 in the city of Fort Worth, Tarrant County, Texas, more particularly described by metes and bounds in **Exhibit B;**

- Construction of a new maintenance facility to be completed on department-owned property located at SH 144 in the city of Glen Rose, Somervell County, Texas, more particularly described by metes and bounds in **Exhibit C**;

- Construction of a new maintenance facility to be completed on department-owned property located at 2400 US 180 West, in the city of Mineral Wells, Palo Pinto County, Texas, more particularly described by metes and bounds in **Exhibit D;**

WHEREAS, <DEVELOPER NAME >, <describe type of entity>, was the successful bidder for Request For Proposal (RFP) No. CBC4704-00837DFWDFW issued September 9, 2010, entitled "Property Exchange Fort Worth District Various Locations; for the design, construction and renovation of a building, a new laboratory, area engineer, and three maintenance facilities and other facility support-structures, to be constructed on department-owned property located in Fort Worth, Glen Rose, and Mineral Wells, Texas in exchange for existing property in Arlington, as described above; and.

SAMPLE DRAFT

WHEREAS, at an open meeting on <DATE>, 2010 the TxDOT Commissioners awarded this DEA to <DEVELOPER NAME>., under Minute Order <NO.>;

WHEREAS, on <DATE>, 2010, <DEVELOPER NAME>, assigned the DEA to <CONSTRUCTION COMPANY NAME>, a Texas Corporation and TxDOT accepted the assignment on <DATE> **[This paragraph will be used only if relevant];**

WHEREAS, the Bond Review Board and Texas Public Finance Authority have received a prior notification of this transaction pursuant to §201.1055, requiring a 45-day notice prior to execution of this agreement; and

WHEREAS, the General Land Office has received prior notification of this transaction pursuant to Natural Resources Code §31.157, requiring a 30 day notice;

NOW, THEREFORE, in consideration of the mutual covenants set forth herein and other good and valuable consideration, the receipt of which is hereby acknowledged, the parties do hereby agree as follows:

Intentionally left blank

SAMPLE DRAFT

Article I - General Definitions

Unless the context clearly requires another meaning, the following terms shall have the meaning assigned herein:

1.1 ***Allowances*** is defined in Section 8.7.

1.2 ***Appraised Value*** is defined as the current market value determined by a certified appraiser and deemed to be the value at closing of the TxDOT property being exchanged.

1.3 ***Architect/Engineer*** is the Architect/Engineer of Record for this project and means a person registered as an architect pursuant to Texas Occupations Code Chapter 1051, as a landscape architect pursuant to Texas Occupations Code Chapter 1051, and/or a person licensed as a professional engineer pursuant to Chapter 1001, or a firm employed by Developer to provide professional architectural or engineering services and/or performing certain **DEA** administration responsibilities. Copies of licenses and checks for good standing shall be furnished upon request.

1.4 ***Change Order*** means a written modification of the **DEA** between TxDOT and the Developer that changes the Contract Sum or the Contract Time.

1.5 ***Change Order Proposal Evaluation (CPE)*** means a Developer-generated document in response to a Change Order Request (COR) which states the adjustment necessary to change any Sum and/or Time in response to the changed work described in the Change Order Request (COR).

1.6 ***Change Order Request (COR)*** means a document generated by TxDOT which describes a change in the Work, including a description and sketches or drawings, as necessary, to inform the Developer of the nature of the change.

1.7 ***Claim*** means a dispute for which an agreed resolution between the Developer or its successor and TxDOT cannot be made informally through the Division/District level and has been filed as a contract claim in accordance with Title 43 Texas Administrative Code (TAC) Section 9.2.

1.8 ***Closeout*** means the process of completing all details of construction. The Closeout period is the time from the Date of Substantial Completion until delivery of the Special Warranty Deed to the properties to be exchanged.

1.9 ***Close-out Documents*** means the Record Drawings, standard product brochures, product/equipment maintenance and operations instructions,

SAMPLE DRAFT

manuals, test reports, warranties, etc., and as may be further defined or identified and required by the Contract Documents.

1.10 ***Construction Documents*** means this DEA, the design, performance specifications, and design drawings identified on Exhibit H attached hereto; and change orders (if any).

1.11 ***Construction Drawings*** means the construction drawings prepared by the Architect/Engineer that establish in detail the quality levels of materials and systems required for the Project as shown in **Exhibit E**.

1.12 ***Contract*** means the **DEA** between TxDOT and the Developer.

1.13 ***Contract Date*** is the effective date of this **DEA** which is the date of execution by TxDOT's Executive Director.

1.14 ***Contract Documents*** means the Request for Proposal (RFP), Development Exchange Agreement, Exhibits, Attachments, and all other documents included in these two documents or caused to be created by these two documents.

1.15 ***Contract Sum*** means the total compensation payable by exchange of TxDOT properties to the Developer for completion of the Work and is the guaranteed maximum not to exceed price stipulated by the appraised value of the Existing TxDOT Properties being exchanged for a total sum of **twelve million three thousand dollars ($12,003,000)** and additional TxDOT partial funding, if any, subject to Change Orders and other adjustments provided herein. Professional Design Services set forth in **Section D-1 in the Request for Proposal** hereof, as subsequently adjusted by any Change Order(s), are included in the Contract Sum. The Contract Sum does not include any financing costs that the Developer may incur in compliance with the terms of this DEA.

1.16 ***Contract Time*** means the period between Date of Commencement and the date scheduled for Substantial Completion of each phase of the Work as set forth in **Exhibit H** and as may be amended by Change Order(s).

1.17 ***Date of Commencement*** means the date stated for beginning performance of this **DEA** in TxDOT's Notice to Proceed to the Developer.

1.18 ***Day*** means a calendar day, unless otherwise specifically stipulated.

1.19 ***Delivery Dates*** means the respective target dates for Substantial Completion of each phase of the Work as set forth in the Project Schedule.

SAMPLE DRAFT

1.20 ***Design Development Drawings*** means the work product of the Architect/Engineer which illustrate and describe the refinement of the design of the Project, establishing the scope, relationships, forms, size and appearance of the Project by means of plans, sections and elevations, typical construction details, and equipment layouts.

1.21 ***Design Submittals*** means the Submittals described in Exhibit H**.**

1.22 ***Developer*** means the entity that is soley responsible and liable for fulfilling all obligations and requirements of the DEA.

1.23 ***Developer's Authorized Representative (DAR)*** is defined in **Section 8.4.2.** ***DEA*** means Development and Exchange Agreement.

1.24 ***Dispute*** means a disagreement between TxDOT and the Developer or its successor over the interpretation of the Contract Documents.

1.25 ***Environmental Laws*** means Comprehensive Environmental Response, Compensation and Liability Act of 1980, as amended ("CERCLA"), 42 U.S.C. §9601 et seq.; the Toxic Substance Control Act ("TSCAS"), 15 U.S.C. §2601 et seq.; the Hazardous Materials Transportation Act, 49 U.S.C. §1802; the Resource Conservation and Recovery Act ("RCRA"), 42 U.S.C. §9601, et seq.; the Clean Water Act ("CWA"), 33 U.S.C. §1251 et seq.; the Safe Drinking Water Act, 42 U.S.C. §300f et seq.; the Clean Air Act ("CAA"), 42 U.S.C. §7401 et seq.; M.G.L. c. 21C and c. 21E; Texas Health and Safety Code Chapter 361; Texas Water Code Chapter 26; and any permits, licenses, approvals, plans, rules, regulations or ordinances adopted, or other criteria and guidelines promulgated pursuant to the preceding laws or other similar federal, state or local laws, regulations, rules or ordinance now or hereafter in effect relating to environmental matters.

1.26 ***Existing TxDOT Properties*** means the Glen Rose, Mineral Wells and the Fort Worth District Headquarter sites as described **Exhibit C-D** attached hereto.

1.27 ***Final Completion*** means the date when the Work is fully performed, according to the **DEA**, as verified by a certificate of Substantial Completion issued by the TxDOT Project Manager (TPM) and the Project is delivered to TxDOT in accordance with the provisions of this **DEA**; subject to TxDOT's right to challenge such determination of Final Completion as set forth herein.

1.28 ***Final Payment*** means the delivery of the Special Warranty Deed to the properties to be exchanged to Developer upon completion and acceptance of the Project. Final Payment shall not occur until all disputes, if any, are settled in accord with the terms of this DEA.

SAMPLE DRAFT

1.29 ***Force Majeure*** is defined in **Section 8.6.5.**

1.30 ***General Contractor*** means contractor responsible for all construction, if different from Developer. Developer must guarantee General Contractor's performance.

1.31 ***Guaranty*** means the Absolute Guaranty of performance of this **DEA** of even date herewith executed by ("**DEVELOPER OR ASSIGNEE'S NAME"**) for the benefit of TxDOT, pursuant to which ("**DEVELOPER OR APPROVED ASSIGNEE', if any"**) guarantees the full performance of all obligations of Developer under this **DEA** in the form as that attached hereto as **Exhibit Q.** If this DEA is assigned, the original party awarded this DEA shall also execute an Absolute Guaranty.

1.32 ***Hazardous Materials*** is defined in **Section 2.7.4.**

1.33 ***New TxDOT Property*** means the improvements to be made on existing TxDOT properties sites described in **Exhibits C-D**, attached hereto.

1.34 ***Non Developer Work*** is defined in **Section 8.2.**

1.35 ***Notice to Proceed*** means the written authorization to commence performance of the DEA Work by the Developer issued by a TxDOT Authorized Signatory. The Notice to Proceed shall include the Date of Commencement.

1.36 ***Owner Supplemental Instructions*** used by the owner to issue additional instructions, interpretations, clarifications, or to make minor changes that do not effect contract time or contract sum.

1.37 ***Punch List*** is defined as details of the work which are minor in character and do not materially affect TxDOT's use or enjoyment of the project.

1.38 ***Project*** means the design and construction of all required improvements on the existing TxDOT Properties consisting of buildings with interior improvements, site work, including landscaping, sidewalks, driveways, parking areas, and demolition, environmental remediation, and site utility work, all in accordance with the Construction Documents.

1.39 ***Project Record Documents*** means all documents related to the Project including the construction documents, any Architect's Supplemental Instructions, As Built Plans and Contract Documents as defined in the **DEA** and constitute the project record.

1.40 ***Project Schedule*** means the periods of time needed for staging and completion of each element of the Work between Date of Commencement and the date scheduled for Substantial Completion of each phase of the

SAMPLE DRAFT

Work, as may be amended by Change Order, as set forth on **Exhibit H attached hereto.**

1.41 ***Properties*** mean the Project sites described on Exhibit C-D attached hereto.

1.42 ***Request for Proposals (RFP)*** means the procurement document number CBC4704-00837DFW issued by TxDOT on September 9, 2010 and any Addenda, from which currently relevant applicable provisions therein have been incorporated into this DEA.

1.43 ***Samples*** mean the physical examples of materials, equipment or workmanship, that are representative of some portion of the Work and establish standards by which the Work will be judged for acceptance.

1.44 ***Schedule of Values*** means the detailed breakdown of the cost of the materials and labor necessary to accomplish the Work attached hereto as **Exhibit I**, as amended pursuant to this **DEA**.

1.45 ***Site(s)*** means the real property as described on **Exhibits C-D** that are Existing TxDOT Properties upon which the required improvements will be built.

1.46 ***State Business Days*** means days that the State is open for business.

1.47 ***Subcontractor*** means a person or organization that, as an independent contractor, contracts directly or indirectly with the Developer or its successor to perform part or all of the Work. The term includes the Architect/Engineer. TxDOT acknowledges that Developer may subcontract with a General Contractor to perform all or a portion of the Work and that the General Contractor may in turn, as a Subcontractor to Developer, subcontract with additional subcontractors to perform part or all of the Work.

1.48 ***Submittals*** means the Design Submittals and Substantiation Submittals.

1.49 ***Substantial Completion*** means, with respect to each phase of the Work, the date established by the Architect/Engineer and, upon acceptance by TxDOT in accordance with the provisions of this **DEA**, by issuance of a Certificate of Substantial Completion, signed by the Architect/Engineer, confirming that the Work for the phase in question is sufficiently complete in accordance with the Accepted Plans and Specifications so that TxDOT can occupy or utilize the improvements covered in the applicable phase for their intended use without material interference from Developer's on-going performance of those portions of the Work which remain to be completed. The Work shall consist, as more particularly delineated on **Exhibit H** attached hereto and applicable Construction Documents. The date of Substantial Completion of each phase of the Work shall be established as set forth **in Article XV.**

SAMPLE DRAFT

1.50 ***Substantiation Submittals*** means the specific submittals required during construction including shop drawings, product literature and samples, and in accordance with the Project Schedule.

1.51 ***TxDOT*** means the Texas Department of Transportation acting on behalf of the State of Texas.

1.52 ***TxDOT's Project Manager (TPM)*** means the designated representative of the Texas Department of Transportation. The TPM appointed as TxDOT's on-site representative during the Project and will have joint responsibility and control of all decisions regarding enforcement of the contract, materials, and changes in the scope of work or schedules with TxDOT's Authorized Signatories. As allowed by TxDOT, the TPM may make all decisions except for changes in Contract Sum and Contract Time.

1.53 ***TxDOT's Authorized Signatories*** means anyone whom, with prior notice to Developer, TxDOT may designate as a TxDOT Authorized Signatory. References to TxDOT shall denote its Authorized Signatories where appropriate. Only TxDOT's Authorized Signatories shall have the authority to act to provide direction as may be required to facilitate construction as provided herein on behalf of TxDOT.

1.54 ***Unit Price Work*** means Work to be paid for on the basis of unit prices.

1.55 ***Unilateral Change Order (ULCO)*** means a Change Order issued by TxDOT without the agreement of the Developer that must be performed by Developer.

1.56 ***Work*** means all services, including but not limited to Architect/Engineer services, surveying, environmental, materials testing, and project administration for, and the complete construction of the Project together with procurement services, and includes labor necessary to produce such construction, and materials and equipment incorporated or to be incorporated in such construction. The parties expressly agree that the Work shall not include Non-Developer Work (hereinafter defined). However, TxDOT may require the Developer to facilitate staging of the Non-Developer Work and will coordinate certain Non-Developer Work without a Change Order as provided in Section 8.2, hereof. In the event Non-Developer Work causes a change as to time or scope of Work for the Developer, a Change Order may be issued in accordance with the provisions of Article XXI.

Article II - General Laws Governing Construction

Compliance with Laws. In the execution of the **DEA** and the Work, the Developer shall comply with all applicable State and Federal laws, including but not limited to, insurance coverage, performance and payment bonds, prompt payment of

SAMPLE DRAFT

subcontractors, and any laws governing labor, equal employment opportunity, safety, environmental protection and prevailing wage rates. The Developer shall make himself familiar with and at all times shall observe and comply with all Federal, State and Local laws, ordinances and regulations which in any manner apply to or affect the DEA; provided, notwithstanding anything to the contrary contained herein, Developer shall not be responsible for correcting or remedying any violations of such laws occurring due to the current status or condition of the Fort Worth District Headquarters, Mineral Wells, and Glen Rose sites prior to the execution of the Developer exercising his right of entry as described in Article 8.2 of the DEA.

2.1 Exceptions to Compliance.

2.1.1 Fees and Permits. TxDOT hereby confirms to Developer that no building permits will be required for work on the Project, if the Project is constructed on TxDOT Property.

2.1.2 Change in Laws. If there is any change between the date hereof and Final Completion in any applicable legal requirements which requires a change in the Work in order to avoid a violation of any such applicable legal requirement, Developer shall be responsible for changing the Work in order to avoid a violation of such legal requirements. The parties shall execute a Change Order to adjust the Contract Sum and/or Contract Time, if applicable, as a result of any increase or decrease in costs or delay due to any change in legal requirements. If there is a change in any applicable legal requirement but the Work or portion thereof affected by such change is deemed to be "grandfathered" (i.e., the applicable legal requirement does not require that the Work be changed), such portion of the Work shall be deemed to comply and Developer shall not be required to change the Work.

2.2 State Sales and Use Taxes. TxDOT qualifies for exemption from State and Local Sales and Use Taxes pursuant to the provisions of Chapter 151, Texas Tax Code. The Developer shall claim exemption from payment of applicable State taxes by complying with such procedures as may be prescribed by the State Comptroller of Public Accounts. None of the value of savings on State Sales and Use Taxes shall be added to nor deducted from the value of the Work by either party.

2.3 Antitrust Claims. The Developer hereby assigns to TxDOT any and all claims for overcharges associated with the **DEA** which arise under the antitrust laws of the United States, 15 U.S.C.A. Sec. 1, et seq.

SAMPLE DRAFT

2.4 Venue for Suits. The venue for any suit brought for breach of the **DEA** for this Project shall be in a state court of competent jurisdiction in **Tarrant County,** Texas.

2.5 Licensing of Trades. The Developer shall comply with all applicable provisions of state law the Texas Department of Licensing and Regulation that are related to the licensing of the Architect/Engineer and all skilled tradesmen, contractors, materialmen, suppliers and or laborers, as necessary to accomplish the Work. In the event the Developer, the Architect/Engineer or one of the Developer's Subcontractors loses a required license for any reason during the term of performance of the **DEA**, the Developer shall promptly hire or contract with a licensed provider of the service at no additional cost to TxDOT.

2.6 Patents and Copyrights. The Developer shall be responsible at all times for compliance with applicable patents or copyrights encompassing, in whole or in part, any design, device, material, or process utilized, directly or indirectly, in the performance of the Work. Whether or not TxDOT has specified the use of a particular design, devise, material or process, the Developer shall pay all royalties and license fees and shall provide, prior to commencement of the Work, a copy of any licenses from any patentee, copyright holder or their duly authorized representative. The costs for these licenses and/or royalties, if any, shall be borne by the Developer.

2.7 Environmental Laws. At all times, the Developer shall conduct its activities in compliance with applicable Environmental Laws and regulations relating to the environment and its protection; provided, notwithstanding anything to the contrary contained herein, Developer shall not be responsible for correcting or remedying any violations of such laws due to the current status or condition of the Existing TxDOT property, prior to the execution of this **DEA** and not caused by Developer, its assigns, agents, contractors, employees or anyone else for whom Developer is responsible.

2.7.1 The Developer is responsible for obtaining and maintaining permits related to storm water run-off for the Sites. The Developer covenants to conduct its operations consistent with storm water run-off permit conditions. TxDOT shall remain responsible for complying with all storm water run-off laws, rules, ordinances and regulations relating to TxDOT's remaining property that is not part of the Sites, provided any non-conforming condition is not due to the Developer's negligent or wrongful activities.

2.7.2 The Developer shall be responsible for any Hazardous Materials brought to the Sites by Developer, its Subcontractor, suppliers or anyone else for whom Developer is responsible. No Hazardous

SAMPLE DRAFT

Materials shall be incorporated into the Work. Developer shall be responsible for Developer's or its Subcontractors' negligence in dealing with any Hazardous Materials.

2.7.3 Developer shall not directly or indirectly through any employees, agents, representatives, Subcontractors, invitees or any other persons occupying the Property or any portion thereof by, through or under Developer cause the pollution of air, soil, and water in, on, under, and around the Properties or Project through the release or discharge of any Hazardous Materials. Developer, at its sole cost and expense, shall take any and all corrective action required by any applicable federal, state, county, municipal, and other laws, codes, ordinances, rules, and regulations to clean up, remove, and abate any and all soil contamination, groundwater contamination, or any other contamination of the Property caused directly or indirectly by any release or discharge of any Hazardous Materials in, on, under, and around the Properties by Developer and/or Developer's employees, agents, representatives, Subcontractors, invitees, or any other persons occupying the Properties or any portion thereof by, through, or under Developer.

2.7.4 As used herein, the term "Hazardous Materials" means (i) hazardous wastes, hazardous substances, hazardous constituents, toxic substances or related materials, whether solids, liquids or gases, including but not limited to substances defined as "hazardous wastes," "hazardous substances," "oils," "toxic substances," "pollutants," "contaminants," "radioactive materials," or other similar designations in, or otherwise subject to regulation under, the Comprehensive Environmental Response, Compensation and Liability Act of 1980, as amended ("CERCLA"), 42 U.S.C. §9601 et seq.; the Toxic Substance Control Act ("TSCAS"), 15 U.S.C. §2601 et seq.; the Hazardous Materials Transportation Act, 49 U.S.C. §1802; the Resource Conservation and Recovery Act ("RCRA"), 42 U.S.C. §9601, et seq.; the Clean Water Act ("CWA"), 33 U.S.C. §1251 et seq.; the Safe Drinking Water Act, 42 U.S.C. §300f et seq.; the Clean Air Act ("CAA"), 42 U.S.C. §7401 et seq.; M.G.L. c. 21C and c. 21E; Texas Health and Safety Code Chapter 361; Texas Water Code Chapter 26; and in any permits, licenses, approvals, plans, rules, regulations or ordinances adopted, or other criteria and guidelines promulgated pursuant to the preceding laws or other similar federal, state or local laws, regulations, rules or ordinance now or hereafter in effect relating to environmental matters (collectively the "Environmental Laws"); and (ii) any other substances, constituents or wastes subject to any applicable federal, state or local law, regulation or

SAMPLE DRAFT

ordinance, including any environmental law, now or hereafter in effect, including but not limited to (A) petroleum, (B) refined petroleum products, (C) waste oil, (D) waste aviation or motor vehicle fuel and (E) asbestos.

2.7.5 Developer shall not be responsible for correcting or remedying any violations of environmental laws occurring due to any pre-existing condition of the existing TxDOT properties. Prior to the execution of the Notice to Proceed the Developer should exercise his right of entry as described in Article VIII of the **DEA** to perform due diligence on the project Sites if the project will be constructed on Existing TxDOT Properties or to determine the environmental condition of TxDOT properties that will be deeded to the Developer in exchange for the construction of the project. The Developer's failure to perform such due diligence shall be deemed a waiver of TxDOT's liability for any environmental or other condition that may require remediation and Developer shall bear all responsibility and expense therefore.

2.8 Antiquities. Developer shall take precaution to avoid disturbing primitive records and antiquities of archaeological, paleo-anthropological or historical significance. No objects of this nature shall be disturbed without written permission of TxDOT and the Texas Historical Commission. When such objects are uncovered unexpectedly, the Develop shall stop all Work in close proximity and notify the TPM and the Texas Historical Commission of their presence and shall not disturb them until written permission and permit to do so is granted. All primitive artifacts and antiquities, as defined in Chapter 191, Texas Natural Resource Code, discovered on TxDOT's property shall remain property of State of Texas, the Texas Historical Commission. If it is determined by TxDOT, in consultation with the Texas Historical Commission that exploration or excavation of primitive records or antiquities on Project Sites is necessary to avoid loss, Developer shall cooperate in salvage work attendant to preservation. If the Work stoppage or salvage work causes an increase in the Developer's cost of, or time required for, performance of the Work, Developer shall be entitled to an adjustment by Change Order as provided herein.

Article III- Compliance with and Enforcement of Prevailing Wage Laws

3.1 Duty to Pay Prevailing Wage Rates. The Developer shall pay not less than the wage scale of the various classes of labor as shown on the "Prevailing Wage Schedule" provided by TxDOT and attached hereto as **Exhibit G** pursuant to Chapter 2258, Texas Government Code. The specified wage rates are minimum rates only. TxDOT will not consider any claims for additional compensation made by any contractor because it pays wages in excess of the applicable minimum rate contained in the **DEA.** The "Prevailing

SAMPLE DRAFT

Wage Schedule" is not a representation that quantities of qualified labor adequate to perform the Work may be found locally at the specified wage rates.

3.2 **Prevailing Wage Schedule. The United States Department of Labor "Prevailing Wage Schedule" for Tarrant, Somervell, and Palo Pinto, County was determined by TxDOT to be the prevailing wage rate in the city of Fort Worth, Glen Rose, and Mineral Wells, Texas,** in compliance with Chapter 2258, Texas Government Code. Should the Developer at any time become aware that a particular skill or trade not reflected on TxDOT's Prevailing Wage Schedule will be or is being employed in the Work, whether by the Developer or by any Subcontractor, the Developer shall promptly inform the TPM and TxDOT shall specify the appropriate wage rate for that skill or trade in accordance with Chapter 2258 of the Texas Government Code, which shall bind the Developer.

3.3 Penalty for Violation. The Developer and any Subcontractor shall pay to the State a penalty of sixty dollars ($60.00) for each worker employed for each calendar day, or portion thereof, that the worker is paid less than the wage rates stipulated in the Prevailing Wage Schedule or any supplement thereto pursuant to Section 3.2. The Developer and each Subcontractor shall keep, or cause to be kept, an accurate record showing the names and occupations of all workers employed in connection with the Work, and showing the actual per diem wages paid to each worker, which records shall be open at all reasonable hours for inspection by TxDOT.

3.4 Complaints of Violations of Prevailing Wage Rates.

3.4.1 Wage Rate or Lien Claim. The Developer shall promptly advise TxDOT in writing of any prevailing wage rate claim or lien claim under this **DEA.**

3.4.2 TxDOT's Determination of Good Cause. Within thirty-one (31) days of receipt of information concerning a violation of Chapter 2258, Texas Government Code, TxDOT shall make an initial determination as to whether good cause exists to believe a violation occurred. TxDOT's decision on the initial determination shall be reduced to writing and sent to the Developer or Subcontractor against whom the violation was alleged, and to the affected worker. When a good cause finding is made, the Developer shall pay and TxDOT shall retain the full amounts claimed by the claimant or claimants as the difference between wages paid and wages due under the Prevailing Wage Schedule and any supplements thereto, together with the applicable penalties, pending a final decision on the violation, in accordance with Chapter 2258.

SAMPLE DRAFT

3.4.3 Arbitration Required if Violation not Resolved. After TxDOT makes its initial determination, the affected Developer or Subcontractor and worker have fourteen (14) calendar days in which to resolve the issue of whether a violation occurred, including the amount that should be retained by TxDOT or paid to the affected worker. If the Developer or Subcontractor and affected worker reach an agreement concerning the worker's claim, the Developer shall promptly notify TxDOT in a written document signed by the worker. If the Developer or Subcontractor and affected worker do not agree before the fifteenth day after TxDOT's determination, the Developer or Subcontractor and affected worker must participate in binding arbitration in accordance with the Texas General Arbitration Act, Chapter 171, Texas Civil Practice & Remedies Code. The parties to the arbitration have ten (10) calendar days after the expiration of the fifteen (15) days referred to above, to agree on an arbitrator; if by the eleventh day there is no agreement to an arbitrator, a district court shall appoint an arbitrator on the petition of any of the parties to the arbitration.

3.4.3 Arbitration Award. If an arbitrator determines that a violation has occurred, the arbitrator shall assess and award against the Developer or Subcontractor the amount of penalty as provided in Section 3.3 hereof and the amount owed the worker. TxDOT may use any amounts retained under Section 3.4.1 hereof to pay the worker the amount as designated in the arbitration award. If TxDOT has not retained enough from the Developer or Subcontractor to pay the worker in accordance with the arbitration award, the worker has a right of action against the Developer and/or Subcontractor, as appropriate, and the surety of either to receive the amount owed, attorneys' fees and court costs. The Developer shall promptly furnish a copy of the arbitration award to TxDOT.

3.5 Prevailing Wage Retainage. Money retained pursuant to Section 3.4 shall be used to pay the claimant or claimants the difference between the amount the worker received in wages for labor on the Project at the rate paid by the Developer or Subcontractor and the amount the worker would have received at the general prevailing wage rate as provided by the agreement of the claimant and the Developer or Subcontractor affected, or in the arbitrator's award. The full statutory penalty of sixty dollars ($60.00) per day of violation per worker shall be retained on behalf of TxDOT to offset its administrative costs, pursuant to Texas Government Code §2258.023. Any retained funds in excess of these amounts shall be returned to the Developer.

SAMPLE DRAFT

3.6 No Extension of Time. If TxDOT determines that good cause exists to believe a violation has occurred, the Developer shall not be entitled to an extension of time for any delay arising directly or indirectly from of the procedures set forth in Section 3.4.

Article IV - Drawings and Specifications

4.1 TxDOT's Ownership of Drawings and Specifications. All drawings, specifications and copies thereof furnished by the Developer are, and shall remain, TxDOT's property after payment for services rendered; provided that TxDOT shall be responsible for and shall release and forever discharge the Developer and its Architect/Engineer from any and all claims, suits, demands, damages, losses, liabilities, costs and expenses, including reasonable attorneys' fees, arising out of any reuse of drawings and specifications or modification or alteration of the same on any TxDOT project other than the Project for which such drawings and specifications were originally created.

4.2 Copies Furnished. TxDOT will be furnished at no additional cost, ten (10) hard copy sets and one (1) electronic file set of: (1) Design Development Drawings and specifications and (2) Construction Drawings and specifications; to be delivered within the timeframe set forth in the Project Schedule (collectively, the "Submittals"). The Design Development Drawings and Construction Drawings shall be submitted. They shall be further subdivided by "package", i.e. site utilities, foundation, etc., as the Developer may elect to subdivide the Work. In addition, after submittal of the Design Development Drawings and prior to submittal of the Construction Drawings, Developer shall provide to TxDOT for informational purposes as they are available the interim construction drawings prepared by the Architect/Engineer to that date at fifty percent (50%) and ninety-five percent (95%) stages of completion.

4.3 Interrelation of Documents. The Construction Drawings depict the location and quantity of elements of the Work. The specifications produced by the Architect/Engineer indicate quality. All documents are intended to be complimentary to produce the Work.

4.4 Resolution of Conflicts in Documents.

4.4.1 Should the drawings disagree one with another, or with the specifications, the better quality or greater quantity of work or materials shall be performed or furnished. Figures given on drawings govern small scale drawings

SAMPLE DRAFT

4.4.2 The provisions of this **DEA** shall prevail in the event of a conflict between these provisions and other Contract Documents, excluding amendments, Change Orders and provisions or requirements not addressed herein.

4.5 Developer's Duty to Review Relevant Documents. In order to facilitate its responsibilities for completion of the Work in accordance with the **DEA** and Construction Documents, prior to commencing the Work, the Developer shall examine and compare the listed documents with relevant field measurements made by the Developer; and any visible conditions at the Sites affecting the Work.

4. 6 Discrepancies and Omissions in Drawings and Specifications.

4.6.1 If in the course of the performance of the obligations in Section 4.5, the Developer discovers any errors, omissions or inconsistencies in the drawings and specifications, the Developer shall promptly report them to TxDOT and remedy errors, omissions or inconsistencies at no cost to TxDOT.

4.6.2 If the Developer fails to perform the examination and reporting obligations of errors, omissions, or inconsistencies described in paragraphs 4.5 and 4.6.1, the Developer shall be responsible for any avoidable costs or direct damages to TxDOT, including the cost of remedy.

Article V - Construction Bonds

5.1 Performance and Payment Bonds. The Developer is required to tender to TxDOT, prior to commencing the Work, performance and payment bonds, as required by Chapter 2253, Texas Government Code. A Notice to Proceed will not be issued without Developer's timely submission of all required bonds and insurance. No work is allowed prior to the issuance of the Notice to Proceed. Any such work is at Developer's own risk. Failure to timely submit bonds will result in default and termination of this **DEA** and forfeiture of the five percent (5%) bid bond without limitation on TxDOT's other legal remedies.

5.1.1 A Performance Bond is required if the Contract Sum is in excess of $100,000, due to TxDOT in fifteen (15) calendar days from the execution of this **DEA**. The performance bond is solely for the protection of the state, in the full amount of the Contract Sum and conditioned on the faithful performance of the Work in accordance with the **DEA** Documents. The form of the bond shall be approved by the Attorney General of Texas.

SAMPLE DRAFT

5.1.2 A Payment Bond is required if the Contract Sum is in excess of $25,000 due to TxDOT in fifteen (15) calendar days from the execution of this **DEA**. A payment bond is payable to the state, in the full amount of the Contract Sum and solely for the protection and use of payment bond beneficiaries who have a direct contractual relationship with the Developer or who supply required materials or labor. The form of bond shall be approved by the Attorney General of Texas.

5.1.3 Corporate sureties authorized to issue bonds shall be qualified and comply with relevant provisions of the Texas Insurance Code.

5.1.4 The performance and payment bonds shall be mailed to:

Texas Department of Transportation
Maintenance Division – Facilities Management Section
125 E. 11th Street
Austin, Texas 78701-2423

5.2 Chapter 2253. The process of requiring and accepting bonds and making claims thereunder shall be conducted in compliance with Chapter 2253, Texas Government Code. **IF FOR ANY REASON A STATUTORY PAYMENT OR PERFORMANCE BOND IS NOT HONORED BY THE SURETY, THE DEVELOPER SHALL FULLY INDEMNIFY AND HOLD TXDOT HARMLESS OF AND FROM ANY COSTS, LOSSES, OBLIGATIONS OR LIABILITIES IT INCURS AS A RESULT.**

5.3 Certified Copies. TxDOT shall furnish certified copies of a payment bond and the related **DEA** to any qualified person seeking copies who complies with Section 2253.026, Texas Government Code.

5.4 Claims on Payment Bonds. Claims on payment bonds must be sent directly to the Developer and its surety in accordance with Section 2253.041, Texas Government Code. All Payment Bond claimants are cautioned that no lien exists on any TxDOT properties, whether improved, unimproved or the subject of this **DEA**, and that reliance on notices sent to TxDOT may result in loss of rights against the Developer and/or its surety. TxDOT is not responsible in any manner to a claimant for collection of unpaid bills, and accepts no such responsibility because of any representation by any agent or employee.

5.5 Performance Bond Surety's Obligation. The Surety for the Performance Bond shall undertake the obligations of the Developer in the event of the Developer's failure to perform pursuant to the **DEA** or in the event of Developer's insolvency or bankruptcy.

SAMPLE DRAFT

Article VI - Insurance Requirements

6.1 Insurance Requirements. Proof of all required insurance shall be submitted to TxDOT on TxDOT's forms (i.e.

6.1.1 The Developer shall carry insurance in the types and amounts indicated in this Article for the duration of the **DEA**, which shall include items owned by TxDOT in the care, custody and control of the Developer prior to, during construction and during the warranty period. The Developer must also complete and file the declaration pages from the insurance policies with TxDOT whenever a previously identified policy period expires during the term of the **DEA**, as proof of continuing coverage. Acceptance of the insurance policy declaration pages by TxDOT shall not relieve or decrease the liability of the Developer.

6.1.2 The Developer shall provide and maintain, until the Work covered in this **DEA** is completed and accepted by TxDOT, the minimum insurance coverages in the minimum amounts as described below. Coverage shall be written on an occurrence basis by companies authorized and admitted to do business in the State of Texas and rated A- or better by A.M. Best Company, or otherwise acceptable to TxDOT.

Type of Coverage:	Limits of Liability:
a. Worker's Compensation	Statutory
b. Employer's Liability	
Bodily Injury by Accident	$500,000 Ea. Accident
Bodily Injury by Disease	$500,000 Ea. Employee
Bodily Injury by Disease	$500,000 Policy Limit

c. Commercial General Liability, including coverage for the following:

1) Premises Operations 2) Independent Contractors 3) Products/Completed Operations 4) Personal Injury	Combined Single Limit for Bodily Injury and Property Damage of $1,000,000 per occurrence or its equivalent.

SAMPLE DRAFT

5) Contractual Liability
Explosion, Collapse,
Underground Broad Form
property damage, including
from fire

d. Business Automobile Liability owned/leased, owned, hired: Combined single limit for Non-Bodily Injury and Property Damage of $1,000,000 Per Occurrence or its Equivalent

e. TxDOT's Protective Liability Insurance Policy, naming the State of Texas and its employees as insured with the following limits: Bodily Injury -$1,000,000 Each Occurrence; $1,000,000 Aggregate.

f. Builder's Risk Insurance
An all risk policy, including workmanship acceptable to TxDOT, in the amount equal at all times to one hundred percent (100%) of the Contract Sum. The policy shall be issued in the name of the Developer and shall name his contractors and subcontractors as additional insured. TxDOT shall be named as a loss payee on the policy. The builders risk policy shall have endorsements as follow:

1. This insurance shall be specific as to coverage and not considered as contributing insurance with any permanent insurance maintained on the present premises. If off site storage is permitted, coverage shall include transit and storage in an amount sufficient to protect property being transported or stored.

2. Builder's Risk Policy shall be endorsed to include coverage for existing building structures.

g. Flood insurance in an amount equal to the Contract Sum.

h. Professional Liability Insurance that covers the Architect/Engineer and Contractor of the Developer for errors, omissions and negligent acts committed by the covered parties.

i. Nothing in this Article VI shall prevent the Developer from obtaining required insurance under a blanket or umbrella insurance policy which may cover any properties owned, leased, or operated by the Developer. However, any blanket or umbrella insurance policy shall specify, or Developer shall

SAMPLE FOR AFT

furnish TxDOT with a written statement from the insurer under such policy specifying the amount of the insurance allocated to the Work as provided in this Article.

6.1.3 Policies must include the following provisions:

a. The insurance shall not be canceled, limited in scope or coverage, or non-renewed until after thirty (30) calendar days prior written notice, or ten (10) calendar days for non-payment of premium, has been given to TxDOT.

b. The Developer's insurance shall be deemed primary with respect to any insurance or self insurance carried by the state agency for liability arising out of operations under the **DEA** with TxDOT.

c. TxDOT, its officials, directors, employees, representatives, and volunteers are added as additional insured as respects operations and activities of, or on behalf of, the named insured performed under this **DEA**. (This is not applicable to the workers' compensation policy.)

d. The workers' compensation and employers' liability policy will provide a waiver of subrogation in favor of TxDOT.

6.1.4 If insurance policies are not written for the amounts specified in Section 6.1.2, the Developer shall carry Umbrella or Excess Liability Insurance for any differences in amounts specified. If Excess Liability Insurance is provided, it shall follow the form of primary coverage.

6.2 Due Date. The furnishing of the above listed insurance coverage must be tendered **prior to execution** of the **DEA** and in no event later than fifteen (15) calendar days from the date of execution. Failure to provide the insurance in a timely fashion is a default of the **DEA** and, if not cured within thirty (30) days after Developer's receipt of written notice of such default, cause cancellation of the DEA. The Developer shall cease all activities until such default is cured. Any liabilities incurred prior to cancellation or relating back to this period shall survive the cancellation.

6.3 Policy Copies. TxDOT shall be entitled, upon request and without expense, to receive copies of the policies and all endorsements as they apply to the limits set out in Section 6.1.2.

6.4 Notifications. All required insurance document shall be mailed to :
Texas Department of Transportation
Attn: Maintenance Division

SAMPLE DRAFT

125 E. 11th Street, Austin, Texas 78701

Article VII - Workers' Compensation Insurance Coverage (Pursuant to Texas Labor Code Chapter 406, Subchapter G and Title 28 Texas Administrative Code Chapter 110)

7.1 Definitions.

7.1.1 Certificate of coverage ("certificate") - A copy of a certificate of insurance, a certificate of authority to self-insure issued by the commission, or a coverage agreement (TWCC-81, TWCC-82, TWCC-83, or TWCC-84), showing statutory workers' compensation insurance coverage for the person's or entity's employees providing services on a project, for the duration of the project.

7.1.2 Duration of the project - includes the time from the beginning of the work on the project until the contractor's/person's work on the project has been completed and accepted by the governmental entity.

7.1.3 Persons providing services on the project includes all persons or entities performing all or part of the services the contractor has undertaken to perform on the project, regardless of whether that person contracted directly with the contractor and regardless of whether that person has employees. This includes, without limitation, independent contractors, subcontractors, leasing companies, motor carriers, owner-operators, employees of any such entity, or employees of any entity which furnishes persons to provide services on the project. "Services" include, without limitation, providing, hauling, or delivering equipment or materials, or providing labor, transportation, or other service related to a project. "Services" does not include activities unrelated to the project, such as and without limitation, food/beverage vendors, office supply deliveries, and delivery of portable toilets.

7.2 – 7.12 Statutory Requirements

7.2 The contractor shall provide coverage, based on proper reporting of classification codes and payroll amounts and filing of any coverage agreements, which meets the statutory requirements of Texas Labor Code, Section 401.011(44) for all employees of the contractor providing services on the project, for the duration of the project.

7.3 The Contractor must provide a certificate of coverage to the governmental entity prior to being awarded the contract.

SAMPLE DRAFT

7.4 If the coverage period shown on the contractor's current certificate of coverage ends during the duration of the project, the contractor must, prior to the end of the coverage period, file a new certificate of coverage with the governmental entity showing that coverage has been extended.

7.5 The contractor shall obtain from each person providing services on a project, and provide to the governmental entity:

a. a certificate of coverage, prior to that person beginning work on the project, so the governmental entity will have on file certificates of coverage showing coverage for all persons providing services on the project; and

b. no later than seven (7) days after receipt by the contractor, a new certificate of coverage showing extension of coverage, if the coverage period shown on the current certificate of coverage ends during the duration of the project.

7.6 The contractor shall retain all required certificates of coverage for the duration of the project and for one year thereafter.

7.7 The contractor shall notify the governmental entity in writing by certified mail or personal delivery, within ten (10) calendar days after the contractor knew or should have known, of any change that materially affects the provision of coverage of any person providing services on the project.

7.8 The contractor shall post on each project site a notice, in the text, form and manner prescribed by the Texas Workers' Compensation Commission, informing all persons providing services on the project that they are required to be covered, and stating how a person may verify coverage and report lack of coverage.

The following is the prescribed notice (a version in Spanish and any other language common to the worker population is also required with the title printed in at least thirty (30) point bold type and text in at least nineteen (19) point normal type):

"REQUIRED WORKERS' COMPENSATION COVERAGE

The law requires that each person working on this site or providing services related to this construction project must be covered by workers' compensation insurance. This includes persons providing, hauling, or delivering equipment or materials, or providing labor or transportation or other service related to the

SAMPLE DRAFT

project, regardless of the identity of their employer or status as an employee."

Call the Texas Workers' Compensation Commission at 1-800-372-7713, 512-804-4345 or 512-804-4104 to receive information on the legal requirement for coverage, to verify whether your employer has provided the required coverage, or to report an employer's failure to provide coverage."

7.9 The contractor shall contractually require each person with whom it contracts to provide services on a project, to:

a. provide coverage, based on proper reporting of classification codes and payroll amounts and filing of any coverage agreements, which meets the statutory requirements of Texas Labor Code, Section 401.011(44) for all of its employees providing services on the project, for the duration of the project;

b. provide to the contractor, prior to that person beginning work on the project, a certificate of coverage showing that coverage is being provided for all employees of the person providing services on the project, for the duration of the project;

c. provide the contractor, prior to the end of the coverage period, a new certificate of coverage showing extension of coverage, if the coverage period shown on the current certificate of coverage ends during the duration of the project;

d. obtain from each other person with whom it contracts, and provide to the contractor:

1. a certificate of coverage, prior to the other person beginning work on the project; and

2. a new certificate of coverage showing extension of coverage, prior to the end of the coverage period, if the coverage period shown on the current certificate of coverage ends during the duration of the project;

e. retain all required certificates of coverage on file for the duration of the project and for one year thereafter;

f. notify the governmental entity in writing by certified mail or personal delivery, within ten (10) days after the person knew or should have

SAMPLE DRAFT

known, of any change that materially affects the provision of coverage of any person providing services on the project; and

g. contractually require each person with whom it contracts, to perform as required by Title 28 Texas Administrative Code (TAC) §110.110, with the certificates of coverage to be provided to the person for whom they are providing services.

7.10 By signing this contract or providing or causing to be provided a certificate of coverage, the contractor is representing to the governmental entity that all employees of the contractor who will provide services on the project will be covered by workers' compensation coverage for the duration of the project, that the coverage will be based on proper reporting of classification codes and payroll amounts, and that all coverage agreements will be filed with the appropriate insurance carrier or, in the case of a self-insured, with the Texas Department of Insurance, Division of Worker's Compensation. Providing false or misleading information may subject the contractor to administrative penalties, criminal penalties, civil penalties, or other civil actions.

7.11 The contractor's failure to comply with any of these provisions is a breach of contract by the contractor which entitles the governmental entity to declare the contract void if the contractor does not remedy the breach within ten (10) calendar days after receipt of notice of breach from the governmental entity.

7.12 TxDOT and the Developer are bound by any further requirements found in Title 28 TAC §110.110. For purposes of this Article, the Developer is the General Contractor.

Article VIII - General Responsibilities of TxDOT and the Developer

8.1 TxDOT's General Responsibilities.

8.1.1 Preconstruction Conference. Prior to the issuance of Notice to Proceed, a conference will be held attended by TxDOT, TPM, the Developer and the Developer's Architect/Engineer, General Contractor, Superintendent and major Subcontractors, if chosen by such time, to review the schedules, procedures for handling Submittals, processing Applications for Payment, maintaining required records and all other matters of importance to the Project and effective communications on Site established under and consistent with the terms and conditions of this **DEA.**

8.1.2 Right of Entry. TxDOT shall issue a Right of Entry Permit to Developer prior to the issuance of Notice to Proceed to enable Developer to conduct any due diligence regarding the condition of the TxDOT property to be exchanged or to making any preparations

SAMPLE DRAFT

required for timely commencement of construction. The Right of Entry shall continue in effect until the Project is accepted and all cosmetic touch-ups have been completed.

8.1.3 TPM. Unless otherwise specifically provided for, the TPM is the single point of contact between TxDOT and Developer. Notice to the TPM, unless otherwise noted, constitutes notice to TxDOT under the **DEA**. Notices that may impact the Project Schedule, develop into Change Orders or change the scope of Work must be delivered directly to TxDOT, through the TPM. The TPM does not have authority to change any Work without written approval from TxDOT's designated signatory.

8.1.4 Utility Location. The Developer is responsible for obtaining accurate surveys, geographical and geotechnical data and accurate site utility locations.

8.1.5 TxDOT's Role with Utilities. TxDOT shall cooperate with Developer to vacate or relocate existing access agreements or utility easements or to establish new access agreements or utility easements necessary or required to complete the Work and shall join in executing such appropriate documents as may be necessary or required to vacate, relocate and/or establish any such access agreements or utility easements to the extent allowed by law.

8.1.6 Availability of Other Lands. The Developer shall be solely responsible for obtaining authorization and paying any related fees to work within lands not under the sole control of TxDOT.

8.2 Non-Developer Work. Any other work relating to the Project desired by TxDOT, to the extent not included within the scope of the Work under the **DEA** shall be deemed to be "Non-Developer Work" and shall be performed by TxDOT or its contractor and at the sole cost of TxDOT. The Developer shall cooperate with and afford TxDOT's contractors reasonable opportunity for (a) introduction and storage of their materials and equipment for execution of their Non-Developer Work, and (b) performance of their Non-Developer Work. All such materials and equipment shall be insured by TxDOT or its contractors or subcontractors, and all risk of loss, liability and responsibility for such stored materials and equipment shall belong to TxDOT or its contractors or subcontractors. Any and all such Non-Developer Work performed by or on behalf of TxDOT shall be performed in such a manner so as to not cause any interference with the Developer's completion of the Work; and the Developer shall have overall control of coordinating any such Non-Developer Work to ensure that such Non-Developer Work does not hinder or delay completion of the Work. If any Non-Developer Work does hinder or delay completion of the

SAMPLE DRAFT

Work or otherwise cause Developer to incur any additional cost, Developer shall be entitled to an adjustment in the Contract Sum and/or the Project Schedule by Change Order in accordance with the provisions of this **DEA**. TxDOT's contractors shall be responsible for keeping the premises free from accumulation of waste materials or rubbish caused by their activities.

8.2.1 Environmental Remediation. The Developer is responsible for any remediation necessary due to contamination of the Sites by Developer's activities. Delay of delivery due to remediation will be charged to developer. Subject to the terms of Section 2.7 hereof, delay of delivery due to remediation will be charged to Developer.

8.2.2 Early Access. TxDOT shall have fifteen (15) calendar days (beginning at the issuance of the Substantial Completion Certificate of the Work), to relocate TxDOT staff, furniture and equipment to the improvements. The early access afforded to TxDOT hereunder, and the fifteen (15) calendar day to vacate former premises is included in the Project Schedule and there shall be no additional charge to TxDOT therefore. The Developer shall allow TxDOT access on a twenty-four (24) hour, seven (7) day per week basis. Once TxDOT's furniture and equipment is installed, Developer and its Subcontractors shall take appropriate steps in completing the Work to avoid damaging the same.

8.2.3 Coordination. The Developer, at no extra cost, shall cooperate with TxDOT to coordinate the Non-Developer Work regarding design, planning and installation of the modular furniture components with the Developer's Work and shall promptly communicate to the TPM any changes in the Work or Project Schedule that may be reasonably foreseen to have an impact on the Non-Developer Work**.** Such coordination shall include (i) prompt hard-wire connection of electrical devices and extensions and termination of voice/data outlets to TxDOT's modular furniture panels as TxDOT installs same to enable TxDOT to complete installation of its modular furniture components in an efficient and timely manner, and (ii) installation coordination and utility connections of owner provided food service equipment.

8.3 Role of TPM.

8.3.1 Authority. The work will be observed, tested and inspected by the TPM for conformity with the contract and performed to his/her satisfaction, in accordance with the contract, plans and specifications. The TPM shall give the Developer notice of deficiencies and required corrective actions regarding and all questions which may arise as to the quality or acceptability of

SAMPLE DRAFT

materials furnished and work performed; the manner of performance and the rate of progress of the work; the interpretations of the plans and specifications; and the acceptable fulfillment of the DEA. The TPM may enforce such decisions regarding corrective actions by notifying the surety and requiring the security to complete the Work, if the Developer fails to take corrective action within the designated time. The TPM's decisions will be final, and will have executive authority to enforce and make effective such decisions and orders if the contractor fails to promptly carry out TPM's directives.

8.3.2 Site Visits. The TPM shall make adequate site visits to monitor construction of the project that are satisfactory to TxDOT . Site visits shall be made at every stage of the work to ensure all materials and systems are observed for compliance prior to any concealment but shall not be less than once per week. Observations are to determine that the workmanship, quality of materials and systems performance comply with the requirements of the plans and specifications and all provisions of the **DEA**. Developer shall provide personnel who are technically qualified by education and experience to observe all phases of the Work with the TPM. The Developer shall at all times remain responsible and liable for any defective Work, whether or not detected by the TPM.

8.3.3 Coordination. The TPM will coordinate with the Developer on all matters regarding Non-Developer Work.

8.3.4 Limitations on TPM Authority. The TPM will not supervise, direct, control or have authority over or be responsible for the Developer's means, methods, techniques, sequences or procedures of construction, or the safety precautions and programs incident thereto. The TPM is not responsible for any failure of the Developer to comply with laws and regulations applicable to the furnishing or performing the Work. The TPM is not responsible for the Developer's failure to perform or furnish the Work in accordance with the drawings and specifications. The TPM and TxDOT are not responsible for the errors, omissions or negligent acts of the Developer, or of any contractor, subcontractor, any supplier, or of any other person or organization performing or furnishing any of the Work. (However, nothing herein shall be construed to limit any other duties the TPM may have to TxDOT regarding this Project.).

8.4 Developer's General Responsibilities.

8.4.1 Oversight. The Developer is the person or entity responsible to TxDOT for the performance of the Work. The Developer shall supervise and direct the Work using the best skill and attention. The

SAMPLE DRAFT

Developer shall be solely responsible for all construction means, methods, techniques, safety, sequences and procedures, and for coordinating all portions of the Work.

8.4.2 Developer's Authorized Representative. <Name and title> will be the Developer's Authorized Representative ("DAR"). The DAR shall represent the Developer at the Sites and shall have full authority to act on behalf of the Developer. All communications from the TPM to the DAR shall be as if to the Developer. All oral communications affecting Contract Time, Contract Sum and **DEA** interpretation will be confirmed in writing by the Developer. In addition, the Developer shall cause to be on site on a daily basis a competent project superintendent or project manager or assistant project superintendent or assistant manager authorized to supervise the day-to-day performance of the Work and to receive and process all inquiries from TxDOT and/or the TPM. The TPM shall confirm any communications in writing to the DAR. Project superintendents or managers and assistant superintendents or assistant managers shall not have the authority to act on behalf of or bind the Developer. The Developer shall give TxDOT's TPM the names of all project superintendents or managers and assistant superintendents or assistant managers upon commencement of the Work and shall promptly notify the TPM of any new or additional DAR(s) designated by the Developer and any new or substitute project superintendents or managers, or assistant superintendents or assistant managers appointed by the Developer.

8.4.3 Labor Management. The Developer shall provide competent, suitably qualified personnel to perform and complete the Work. The Developer shall at all times maintain good discipline and order at the Site. All workers employed by the Developer, contractors and subcontractors shall have such skill and experience as will enable them to properly perform their assigned duties. If, in the opinion of TxDOT, any person employed by the Developer or a Subcontractor does not perform Work in a proper and skillful manner, displays chronic uncooperative behavior, makes threats of or participates in physical aggression or endangerment, or who is disrespectful, intemperate, disorderly or otherwise objectionable, TxDOT shall so inform the Developer. The Developer shall take appropriate steps to deal with any such problems to ensure that the Work is performed in accordance with this **DEA** at no additional cost or liability to TxDOT, and shall promptly inform TxDOT of all action taken in such matters.

8.4.4 Services, Materials, and Equipment. The Developer shall provide and assume full responsibility for all services, materials, equipment, labor, transportation, construction equipment and machinery, tools,

SAMPLE DRAFT

appliances, fuel, power, light, heat, telephone, water, sanitary facilities, temporary facilities, and all other facilities and incidentals necessary for the performance, testing, start-up, and completion of the Work. The Developer shall be responsible for utility services to the Project after TxDOT vacates the premises where the Work will be performed. Once TxDOT has occupied the new improvements TxDOT shall be responsible for existing utility services at the Site(s).

8.4.5 Utilities. The Developer is responsible for ascertaining the locations of any underground utilities. Developer is wholly responsible for any damages to any utilities as a result of its activities. The Developer shall notify owners of adjacent property (if any) of underground facilities, and shall notify utility owners when prosecution of the Work may affect them or their facilities, and shall cooperate with them in the protection, removal, relocation and replacement of their facilities and/or utilities.

8.4.6 No Substitutions Without Approval. The Developer may make substitutions in the design of and the materials for the Work only with the consent of TxDOT, after evaluation and recommendation by the TPM and in accordance with a Change Order, if applicable.

8.4.7 Documents and Samples at the Site. The Developer shall maintain at the sites for TxDOT one record copy of the drawings/plans/specifications,Change Orders and other modifications, in good order and marked currently to record field changes and selections made during construction, and one record copy of approved Shop Drawings, Samples and similar required submittals. These shall be available to the TPM and shall be delivered to TxDOT upon completion of the Work.

8.4.8 Testing of materials. The Developer shall pay for all routine testing of materials required for the Work under paragraphs 11.3.3 and 11.3.4. Retesting of materials failing the initial test will be paid for by the Developer without cost to TxDOT. The Developer shall replace materials which fail retesting without additional cost to TxDOT.

8.4.9 Compliance. The Developer shall be responsible for completion of the Work in compliance with this DEA. The Developer shall not be entitled to any adjustment to the Contract Sum as a result of any errors and/or omissions in design by its Architect and/or other engineers and design professionals retained by or on behalf of the Developer. Should work be identified by either the Developer's Architect/Engineer and/or the TPM as not being in compliance with the Contract Documents, the TPM shall communicate the finding to Developer. The work shall be corrected by the Developer at its

SAMPLE DRAFT

expense. If Developer contests the Architect/Engineer's and/or the TPM's determination, such dispute shall be resolved in accordance with the provisions of Article XXVI. The approval of work by the Architect/Engineer does not relieve the Developer from compliance with all requirements of the drawings and specifications where such requirements were not judged at the time of observation of the work due to work sequences by the Developer or the lack of time to judge the performance characteristics of the particular work item.

8.5 Developer/Contractors/Subcontractors Duties. The Developer may have the construction of the Project performed by a General Contractor designated and employed by Developer. The General Contractor shall in turn subcontract with Subcontractors to perform portions of the Work. The Developer and/or its General Contractor shall have exclusive control over the selection and supervision of the Subcontractors performing the Work.

8.5.1 Prohibited Contractors/Consultants. No entities at any tier employing anyone owing child support and entities on the Debarred Vendors List and Excluded Parties List System may be contracted to work on the Project. The list of debarred entities should be searched on the internet: http://window.state.tx.us/procurement/prog/vendor_performance/. The Developer, contractor and subcontractors may rely on the information obtained from the "Texas Comptroller of Public Accounts" website and by contacting the **Letting Management Supervisor by fax at (512) 416-2536** for information about contractors and subcontractors debarred by TxDOT. The Developer shall have each Subcontractor certify that it does not owe any debt to the State and that none of its employees owe the State for non-payment of child support and may not contract with any subcontractor who fails to so certify. Information regarding child support deductions from payroll appears on the State Comptroller's internet site at www.window.state.tx.us/taxinfo/coasintr.html (search "child support"). Subcontractors may rely on information regarding child support from the internet at www.oag.state.tx.us (cursor to "child support" in the left margin and click on "child support evaders").

8.5.2 Assignment of Contracts. The Developer's contract with its General Contractor and all subcontracts with the Subcontractors shall specifically state that TxDOT is the beneficiary of all rights of Developer under such contracts and that upon any default by Developer under this **DEA**, TxDOT shall have the right, but not the obligation, to enforce such construction contracts jointly and severally. TxDOT's rights against Subcontractors shall be in addition to all rights it has under this **DEA**.

SAMPLE DRAFT

8.5.3 Scheduling/Communication. The Developer shall be solely responsible for scheduling and coordinating the Work of contractors/subcontractors, suppliers and other persons and organizations performing or furnishing any of the Work under a direct or indirect contract with the Developer. All contractors/subcontractors, suppliers and such other persons and organizations performing or furnishing any of the Work shall communicate with TxDOT through the Developer.

8.5.4 Errors/Omissions/Negligent Acts. The Developer shall be responsible to TxDOT for the performance of the Work with the same force and effect as if Developer itself shall have performed such Work with its own labor force. The Developer shall be responsible for errors and omissions in design and shall not be entitled to any adjustment for correcting the performance of the Work as a result of any errors and/or omissions in design by the Architect and/or other engineers and design professionals retained by or on behalf of Developer. The Developer shall be responsible for the errors, omissions and negligent acts of its Architect/Engineer, employees and Subcontractors, suppliers and their agents and employees.

8.5.5 Cleaning. The Developer shall at all times keep the Sites clean and free from accumulation of waste materials or rubbish caused by the construction or other activities under the **DEA**. Upon completion of the Project, and prior to the final inspection, the Developer shall deliver the Work in a neat and clean condition.

8.5.6 Notices Required. Developer shall immediately notify TxDOT in writing of any materialmens or mechanics liens against the Properties.

8.5.7 Lien Removal. If, at any time, there is any lien or claim of any kind whatsoever filed against the Project by contractors/subcontractors, Architects, engineers or other design professionals or anyone claiming under or through Developer, contractors/subcontractors, Architects, engineers or other design professionals for work performed or materials, supplies or equipment furnished in connection with the Work, the Developer shall, within sixty (60) calendar days cause such lien or encumbrance to be canceled and discharged of record by payment, bonding or otherwise, at Developer's sole cost and expense, and at no cost to TxDOT. If any lien or other encumbrance required to be removed at the Developer's sole cost and expense is not canceled and discharged of record, TxDOT shall have the right to take such action as TxDOT shall deem appropriate (which shall include the right to cause such lien or other encumbrance to be canceled and discharged of record). In such event, all costs and expenses incurred by TxDOT in connection therewith (including, without limitation,

SAMPLE DRAFT

premiums for any bond furnished in connection therewith, and reasonable attorneys' fees, court costs and disbursements), together with interest thereon at the highest rate allowed by law, shall be paid by Developer to TxDOT upon receipt of written demand. TxDOT shall withhold Final Payment for Developer's failure to comply with this provision.

8.6 Construction Time. In performing the Work, the Developer shall achieve the milestone dates set forth in the schedule (the "Project Schedule") attached hereto as **Exhibit K** so that Substantial Completion of the Work shall be achieved on the Delivery Dates set forth in the Project Schedule, as to which Delivery Dates time shall be of the essence. The Project Schedule shall be updated by Developer from time to time (not less than monthly) in accordance with the progress of the Work. The Delivery Dates may only be extended as set forth in Subsection 8.6.1.

8.6.1 Extensions. The Delivery Dates may be extended only by reason of (i) a Change Order, (ii) a TxDOT Delay or (iii) the occurrence of Force Majeure. In the event of a Change Order, the Delivery Date shall be accelerated or postponed, if at all, only as set forth in such Change Order. In the event (i) a TxDOT Delay or Force Majeure occurs and (ii) Developer would have otherwise been able to perform all its obligations under the **DEA** but for such delay, the Delivery Date(s) shall be extended by Change Order by the number of days equal to the days the Developer is actually delayed thereby. In the event of a TxDOT Delay, the Contract Sum shall be subject to an equitable adjustment to reflect the increase or decrease in costs incurred by the Developer as a result of such TxDOT Delay, and (A) TxDOT shall pay such increased amount to the Developer as work progresses or (B) TxDOT shall be credited for such decrease by an offset to the cost of any other Change Order(s). However, any additional costs due to Force Majeure shall not be charged to TxDOT but shall be claimed against the Developer's insurance policy.

8.6.2 Developer's Delay. If at any time in the course of the performance of its Work, the Developer shall fall behind the Project Schedule and shall not be entitled to request an extension of time by reason of a Change Order, TxDOT Delay or Force Majeure, then the Developer shall promptly submit to TxDOT a plan, including proposed adjustments to the Project Schedule, if any, showing how the Developer plans to mitigate the impact upon the timely completion of the Work and how it plans to regain any time lost. The cost and expense of any measures implemented to achieve the foregoing, shall be borne entirely by the Developer. If the Developer shall be unable to meet the Delivery Date(s) (as such date(s) is (are) adjusted by Change Orders) for any reason other than a TxDOT Delay or Force

SAMPLE DRAFT

Majeure, then Developer shall pay Liquidated Damages as calculated pursuant to this Article.

8.6.3 Liquidated Damages. If the Substantial Completion Date for the Project does not occur on or before the Delivery Date (as designated on the Project Schedule), subject only to Change Order, Force Majeure and TxDOT Delay, then the Developer shall reimburse TxDOT for its Delay Damages from the Delivery Date until the Substantial Completion Date. Delay Damages means a liquidated damages per diem amount equal to the sum of **$1,500.00** per day, being TxDOT's reasonable estimate of costs it will incur (including, but not limited to, rental of other space, moving costs and interruption of business) due to the delay during such period. Liquidated Damages shall be paid by the Developer to TxDOT within ten (10) calendar days of the receipt of an itemized invoice from TxDOT. This amount is not in the nature of a penalty but is a reasonable amount estimated to make TxDOT whole in the event of the delay described herein.

8.6.4 TxDOT Delay. A TxDOT Delay shall mean delays or hindrances in the Work caused by (I) the errors, omissions or negligent acts of TxDOT in its performance of its respective obligations for the Project which errors, omissions or negligent acts are not corrected by TxDOT within forty-eight (48) hours after receipt of written notice from the Developer, or such other period of time as may be agreed upon by the parties, or (II) TxDOT's failure to respond and give approvals and/or disapprovals within five (5) calendar days after receipt of a request for approval and/or disapproval of any other item or matter in regard to this **DEA**, or (III) the performance of any Non-Developer Work. In the event of a TxDOT Delay, the Developer shall seek to minimize the period of delay or hindrance. If the Developer wishes to make a claim for an extension of the Delivery Date or increase in the Contract Sum by reason of a TxDOT Delay, the Developer shall give prompt notice to TxDOT of such claim. The Developer shall furnish TxDOT with an itemized accounting of actual costs for any adjustment. TxDOT reserves the right to dispute any claim pursuant to Article XXVI.

8.6.5 Force Majeure. A Force Majeure shall mean delays or hindrances in the Work caused by (i) acts of God; (ii) strikes, labor disputes, labor shortages or material shortages outside of the Developer's reasonable control; (iii) blackouts; (iv) acts of public enemy; (v) orders of any kind of the government of the United States or of the State of Texas or any department, agency, political subdivision or official of either of them, or any civil or military authority; (vi) riots; (vii) epidemics disabling the labor force; (viii) landslides; (ix) earthquakes affecting the Project; (x) fires not caused by Developer, its affiliates or contracted entities; (xi)

SAMPLE DRAFT

hurricanes and/or tornadoes; (xii) adverse weather conditions (i.e., the number of days in excess of the normal weather [excessive heat, rain or snow days] as defined for a thirty (30) Calendar day period by the National Weather Service, National Oceanic and Atmospheric Administration (NOAA), Texas metropolitan area; (xiii) floods; (xiv) partial or entire failure of public utilities affecting the Project; (xv) delays due to compliance with the provisions of Section 2.8 hereof; and (xvi) any other similar cause or event not reasonably within TxDOT's or the Developer's, contractors'/subcontractors' control and not resulting from their errors, omissions or negligent acts. Force Majeure events give the Developer a right to an extension of Contract Time only, which is non-compensable. The Developer shall give notice to TxDOT of the occurrence of any event of Force Majeure that may give rise to a right for an extension of the Delivery Date as soon as reasonably possible after the discovery by the Developer of such Force Majeure event, but not more than thirty (30) calendar days from an occurrence. TxDOT shall execute a Change Order adjusting the Contract Time.

8.6.6 Requirements for Substantial Completion. For each phase of the Project, the Work must be complete in accordance with the Construction Documents for TxDOT to occupy or utilize the buildings for their intended use without material interference from the Developer's on-going performance of those portions of the Work which remain to be completed. For purposes herein, "Substantial Completion Date" shall mean the date on which (i) the TPM has certified that the Work for each phase of the Project has been substantially completed. All operation and maintenance manuals for the completed phase of the Work must be submitted and all training for the applicable phase must be complete.

8.6.7 Punch List Items. The term "Punch List" shall mean details of the Work requiring replacement or repair and that are minor in character and do not materially interfere with TxDOT's use or enjoyment of the Project, and may also include landscaping and other items which do not materially affect TxDOT's use of the Project. Punch List Items may not include operation and maintenance manuals and training. These items are considered essential elements of the Project and completion of these items is required for Substantial Completion of the Project or designated portions thereof. Before the Substantial Completion Date, the Developer shall deliver to TxDOT a comprehensive punch list of items to be completed or corrected. When TxDOT determines that the Work is substantially complete, the TPM will then prepare a Certificate of Substantial Completion which shall establish the date of Substantial Completion and give the Developer a Final Punch List. The Developer

SAMPLE DRAFT

shall complete all Final Punch List Items within thirty (30) calendar days after the receipt of Final Punch List Items, subject to Force Majeure and TxDOT Delays. If the Developer fails to complete any Final Punch List Item within thirty (30) calendar days after the receipt of Final Punch List Items, subject to Force Majeure and TxDOT Delays, TxDOT shall have the right to complete any such Final Punch List Item(s), using duly qualified contractors, and the Developer shall reimburse within thirty (30) calendar days after receipt of TxDOT's written invoice.

8.6.8 As Built Plans and Specifications. The Developer shall furnish TxDOT a complete set of reproducible "As Built" plans and specifications in hard copy and in electronic format. The complete set of “As Builts” shall be submitted with other close-out documents. The “As Builts” must be prepared by the architect or engineer of record, registered in Texas, whose signature and seal shall be prominently displayed on the title sheets. “As Builts” must be kept current on a monthly basis during the progress of the Work. If the “As Builts” are not submitted in a timely manner, the Developer will be subject to liability for further damages and the Substantial Completion will be delayed.

8.7 Allowances. Set forth in **Exhibit H** as part of the Construction Documents is a schedule of allowance items (“Allowance Items”), identifying portions of the Work for which the Developer and TxDOT have agreed upon as the amount allocated for each of the Allowance Items. All savings under any of the designated Allowance Items shall accrue to the benefit of TxDOT and the Contract Sum shall be reduced by one hundred percent (100%) of such savings. Savings shall be offset by increases, if any, of Allowance Items, but only for substitutions that exceed the allowed amounts. If the actual cost of all Allowance Items exceeds the total of the corresponding amounts set forth in **Exhibit H**, the Contract Sum shall be increased dollar-for-dollar for the actual cost in excess of the amount allocated to each corresponding Allowance Item by Change Order as provided for herein, and the cost will be covered by the $500,000.00 general allowance for unforeseen issues required by the RFP. Should this allowance be exhausted during the course of the project, any additional cost will be covered by negotiating a reduction of work of equal value in another area of the project. The negotiation shall be documented by a change order for accounting purposes. Developer shall not incur any costs for any of the Allowance Items in excess of the respective amounts set forth in **Exhibit H** without TxDOT’s prior written consent as reflected in a Change Order.

SAMPLE DRAFT

Article IX - Additional Developer Responsibilities when TxDOT Awards Non-Developer Work

9.1 Separate Non-Developer Work. TxDOT reserves the right to award Non-Developer Work in connection with other portions of the Project. TxDOT reserves the right to perform operations related to the Project (that are outside of the scope of the Work) with TxDOT's own forces or contractors, subject to compliance with the provisions of Section 8.2 hereof. The Developer shall not be required to indemnify TxDOT as set forth in Article XXVIII for any errors, omissions or negligent acts related to Non-Developer Work.

9.1.1 Developer Duties. The Developer shall cooperate with TxDOT to coordinate the Non-Developer Work with the Developer's Work and shall promptly communicate to the TPM any changes in the Work or Project Schedule that may be reasonably foreseen to have an impact on the Non-Developer Work. If any part of the Developer's Work depends for proper execution or proper results on Non-Developer Work, the Developer shall inspect and promptly report in writing to the TPM any visually apparent discrepancies or defects found in such other work that render it unsuitable for such proper execution and results.

9.1.2 Damage. Should the Developer cause damage to the Non-Developer Work included within the scope of Non-Developer Work identified in Section 8.2, the Developer shall, upon due written notice, endeavor to settle with TxDOT. If there is no settlement, any dispute shall be settled in accordance with Article XXVI.

9.1.3 Storage. In addition to Developer's obligations under Section 9.1.2, the Developer shall use its good faith efforts to afford the Non-Developer Work and TxDOT's own forces, as necessary, with the reasonable opportunity for the introduction and storage of materials and equipment and the execution of the Non-Developer Work.

9.2 Costs and Claims. Except as provided in Section 9.1.2, the Developer shall not be responsible for any costs incurred by TxDOT with respect to the Non-Developer Work caused by delays, improperly timed activities or defective construction by the Non-Developer, as TxDOT assumes all risk with respect to the performance of the Non-Developer Work**.** Developer may assert a written claim for such Developer cost incurred because of delays, improperly timed activities, damage to the Work or defective construction by Non-Developer Work and must submit itemized costs and supporting documents (for example, as invoices, work logs, description and timeline of the situation that is the basis for the claim). Developer may make claim for such amounts as outlined in

SAMPLE DRAFT

Article XXII. TxDOT reserves the right to dispute any claim pursuant to Article XXVI.

Article X - The Developer's Responsibility for Jobsite Safety

10.1 Compliance with Laws. The Developer shall be responsible for initiating, maintaining and supervising all safety precautions and programs in connection with the Work. It shall be the duty and responsibility of the Developer and all of its contractors/subcontractors to be familiar and comply with all requirements of Public Law 91-596, 29 U.S.C. §§ 651 et. seq., the Occupational Safety and Health Act of 1970, (OSHA) and all amendments thereto, and to enforce all provisions of the Act. The Developer shall comply with all applicable laws and regulations of any public body having jurisdiction for safety of persons or property to protect them from damage, injury or loss and shall erect and maintain all necessary safeguards for such safety and protection.

10.2 Emergencies. In any emergency affecting the safety of persons or property, the Developer shall act reasonably to prevent threatened damage, injury or loss. The Developer shall give the TPM prompt notice if the Developer believes that any significant changes in the Work or variations from **DEA** provisions have been caused by its emergency response. Any additional compensation or extension of time claimed by the Developer resulting from emergency work shall be considered in accordance with Articles XXI and XXII.

10.2.1 Response. Authorized agents of the Developer shall respond immediately to an emergency call at anytime of day or night when circumstances warrant the presence of the Developer to protect the Work or Property from damage, restriction or limitation or to take such action pertaining to the Work as may be necessary to provide for the safety of the public. Should the Developer fail to respond to an emergency within a reasonable time given the nature of the emergency, TxDOT is authorized to direct other forces to take action as necessary and TxDOT may, at its sole discretion, submit supporting documentation for reimbursement to Developer or deduct any cost of remedial action from the funds due the Developer.

10.2.2 Notice. In the event of an accident involving a lost time injury to an individual on or near the Work, the Developer shall notify the TPM within twenty-four (24) hours of the event. The Developer shall record the location of the event, the circumstances surrounding the event, by using photography or other means, and shall gather witness statements and other documentation which describe the event. The Developer shall supply the TPM with a set of these

SAMPLE DRAFT

documents no later than thirty-six (36) hours after the occurrence of the event.

10.2.3 Other Communications. The Developer shall be responsible for coordinating the exchange of material safety data sheets or other hazard communication information required and make them available to employers at the sites and other employers who have reason to be informed.

10.3 Environmental Safety and Control. Upon encountering any previously unknown hazardous waste material, or other materials contaminated by hazardous waste not discovered through due diligence, the Developer shall immediately stop work in and secure the affected area, and notify the TPM. All contracts and subcontracts shall expressly bind contractors and subcontractors to the same duty. On receiving such notice, TxDOT shall promptly engage qualified experts to make such investigations and conduct such tests as may be reasonably necessary to determine the existence or extent of any environmental hazard. As soon as possible upon completion of this investigation, TxDOT shall issue a written report to the Developer identifying the material or materials found and indicating any necessary steps to be taken to treat, handle, transport or dispose of the material. Unless TxDOT and Developer execute a Change Order for such work, TxDOT may in its role discretion hire third-parties to perform any or all such steps. The Developer shall be responsible for coordinating the exchange of material safety data sheets or other hazard communication information required to be made available to employers at the site.

10.4 Developer's Obligations. The cost of remediation shall be borne by Developer for any hazardous waste material or other materials contaminated by hazardous wastes that have been introduced by the Developer, its contractors and/or subcontractors, or other parties engaged by the Developer. Developer may be subject to liquidated damages for delays caused by Developer's contamination. The Developer shall be responsible for performing or procuring remediation services for Developer's contamination at no cost to TxDOT.

Article XI - Materials and Workmanship; **Licensing and Testing**

11.1 Materials and Workmanship. The Developer warrants and guarantees that all Work shall be executed in a good and workmanlike manner, complete in all parts and in accordance with approved practices and customs. All materials and equipment incorporated into the Work shall be new.

11.2 Developer's Warranty of Workmanship. The Developer warrants that the Work will conform to all requirements of the Construction Documents and will be free from any defect of equipment, material or design furnished or workmanship performed by the Developer, contractors/subcontractors, and suppliers at any

SAMPLE DRAFT

tier. The Warranty for the Work shall continue for one year from the date of Substantial Completion. The Developer shall remedy at its own expense any damages to the Work and TxDOT's real or personal property caused by any defect of design, equipment, materials or workmanship occurring within such one year warranty period.

11.2.1 Notice. The TPM shall notify the Developer in writing within forty eight (48) hours after the discovery of any failure, defect or damage pertaining to the Work.

11.2.2 Remediation. For purposes herein, "remediation" means the repair, replacement or restoration of damages caused by defects in design, equipment, materials or workmanship. The Developer shall proceed with remediation in an expeditious manner. Failure of the Developer to commence remediation within thirty (30) calendar days after receipt of notice shall be cause for TxDOT to perform the remediation at the Developer's expense or require the surety to fulfill the Developer's obligations. Performance by TxDOT shall not release the Developer from its warranty or liability for costs incurred by TxDOT in performing the remediation.

11.2.3 Limits on Warranty. The Developer's Warranty and guarantee hereunder excludes defects or damage caused by:

a. Abuse, modification or improper maintenance or operation by persons other than the Developer, suppliers, contractors/subcontractors, or any other individual or entity for whom the Developer is responsible, and

b. Normal wear and tear under normal usage.

11.2.4 Events Not Affecting Warranty. None of the following will affect any warranty or a release of the Developer's obligation to perform the Work:

a. observations by TxDOT and/or the TPM;

b. performance of remediation by TxDOT or the Developer's surety;

c. issuance of a certificate of Substantial Completion or any payment to the Developer;

d. use or occupancy of the Work or any part thereof by TxDOT;

e. any acceptance by TxDOT or any failure to do so;

SAMPLE DRAFT

f. lack of any inspection or testing;

g. any review of a Shop Drawing or sample submittal; or

h. any inspection, test or approval by others.

11.3 Testing. With respect to all testing required under subsection 11.3.2, the Developer shall give the TPM timely notice of its readiness and of the date arranged so the TPM may observe such inspection, testing or approval. The frequency of testing shall be in accordance with industry standards.

11.3.1 Verification of Compliance. When requested by TxDOT, demonstration of a material's compliance with the specifications shall be made by a manufacturer's certificate of compliance, mill certificate or testing laboratory certification, as applicable.

11.3.2 Materials subject to Test. Materials incorporated into the Project may be subject to routine tests as required to insure their compliance with the specifications to the extent such tests are customarily performed in the industry for the material in question. Materials to be tested are the following:

a. Concrete and Aggregates - Mix design and confirmation; slump tests; cylinder compression tests; aggregate testing; onsite and batch plant control; pre-pour observation of reinforcement placing; cast-in-place concrete inspections and testing; compressive strength test; pier inspections/observations.

b. Masonry - concrete masonry unit testing; evaluation of mortars and grout compressive strength; observation.

c. Steel - Tensile tests.

d. Structural Steel - Non-destructive welding inspection; reinforcing steel inspections and testing; bolt and torque inspection.

e. Welds - Field inspection and X-ray equipment.

f. Earthwork - Subsoil investigation; physical analysis and compaction tests; inspections and testing; moisture-density control (Proctor-ASTM/AASHTO); field density test; borrow source evaluation; stabilization monitoring and testing.

g. Asphalt - Mix designs and confirmation; onsite and batch plant control; rolling pattern identification; laboratory testing

SAMPLE - DRAFT

of density, stability, permeability and swell value; testing of asphalt striping.

h. Pavement - Physical analysis and compaction tests.

i. Roofing - Samples cut from materials used; assemblies' observation and testing.

j. Fireproofing - Measurements of thickness and unit weight; adhesion/cohesion testing.

k. Other Materials - TxDOT may direct the Developer to test any other materials for which standard laboratory or industry testing procedures have been established provided TxDOT has objective evidence of probable failure of the material to meet its intended purpose. If tests prove that the material complies with specifications, TxDOT will reimburse the Developer for laboratory fees. If noncompliance is proved, laboratory fees will be paid by the Developer.

The Developer shall be held responsible for providing samples of sufficient size for test purposes. All tests will be in accordance with professional societies' standard test procedures. Developer shall notify the TPM of all required tests and the TPM shall have the right to observe all such tests. Results of all tests will be provided to TxDOT.

11.3.3 Cost of Testing. The Developer shall pay for all testing required in this Section 11.3.2.

11.3.4 Additional Compliance Tests. Should any of the routine tests indicate that a material does not comply with the job requirements, the burden of proof of compliance shall be with the Developer, subject to the following conditions:

a. The Developer may select the laboratory for further testing and TxDOT may review the quality and nature of the test for compliance with industry standards.

b. Samples shall be taken in the presence of TxDOT or the TPM.

c. If tests prove that the material complies with specifications, TxDOT will reimburse the Developer for laboratory fees. If noncompliance is proved, laboratory fees will be paid by the Developer.

SAMPLE DRAFT

d. Proof of noncompliance will make the Developer liable for any necessary or required corrective action, including complete removal and replacement of defective material.

e. All subsequent tests on original or replaced materials conducted as a result of prior failure will be paid by the Developer.

11.3.5 Special Testing. TxDOT may require via Change Order special inspection, testing or approval of material or Work for compliance with requirements of the drawings and specifications. In the event the materials or Work fail, the Developer shall pay the cost for testing and replacement.

11.4 Developer's Testing. Nothing contained herein is intended to imply that the Developer does not have the right to have tests performed on any material at any time for his own information and job control; however, TxDOT will not be charged for costs nor be required rely upon such tests when appraising quality of materials. Any modification of, or elaboration on, these test procedures which may be included for specific materials under their respective specification sections shall take precedence over these procedures.

Article XII –Submittals

12.1 Submittals. After the Developer's architect has approved the submittals, the Developer shall provide the submittals to TxDOT. TxDOT shall approve or disapprove such Submittals within fourteen (14) days after TxDOT's receipt of each Submittal if a specific time period is not established in the Project Schedule or elsewhere in this **DEA** for a particular Submittal. The submittal schedule shall be provided to TxDOT within ninety (90) calendar days of the execution of this **DEA** and shall become part of the Contract Documents. The Developer shall maintain an accurate Submittal Log and copy both TxDOT and/or the TPM on all transmittals**.** The Submittal Log and any amendments thereto shall become part of the Contract Documents. Credit will not be given for submittals until final review and approval by TxDOT. Each phase of approved design submittals shall become superseded the previous phase and become a part of the contract documents.

12.1.1 Review and Certification. The Developer shall review each Submittal for compliance with the Contract Documents and shall certify that it has done so by stamp, or otherwise, affixed to each copy thereof. Submittal data presented without such certification will be returned without review or other comment, and any resulting delay will be the Developer's responsibility. By submitting shop drawings, samples or other required information as part of a Submittal, the

SAMPLE DRAFT

Developer thereby represents that it has determined and verified all field measurements, field construction criteria, materials, catalog numbers and similar data, and that it has checked and coordinated each such shop drawing and sample with the requirements of the Work and of the Construction Documents.

12.1.2 Notice of Deviations. At the time of submission of any Submittal, the Developer shall inform TxDOT in writing of any deviation in any shop drawings or samples included as part of a Submittal from the requirements of the Contract Documents. TxDOT retains the right to refuse any deviations and the Developer must comply with TxDOT's demand for conformity, unless such deviation is a correction of any errors in design, materials or equipment, in which case there will be no charge to TxDOT.

12.1.3 Interim Information. Interim construction drawings shall also be provided to TxDOT by Developer. **[Why do we want these? Should they be required in the RFP?]**

12.2 Nature and Effect of Review. TxDOT's TPM will review the initial Submittal within the time periods established hereunder, but for no longer than fourteen (14) business days and will review only for conformance with the design concept of the Project with the information given in the Accepted Plans and Specifications. Acceptance without comment of the shop drawings or samples included as part of a Submittal shall not relieve the Developer of responsibility for any deviation from the requirements of the Accepted Plans and Specifications or from responsibility for errors or omissions in such shop drawings or samples.

12.3 Correction and Resubmission. The Developer shall make any corrections required to a Submittal and shall resubmit the required number of corrected copies of the Submittals promptly so as to avoid delay. The Developer shall inform TxDOT's TPM in writing of any new revisions besides the corrections requested on previous submissions. Upon completion of the Developer's Architect/Engineer review process of each submittal, the Developer shall provide one (1) set to the TPM for final review and written response within seven (7) calendar days**.**

12.4 Distribution of Submittals. The Developer shall not distribute any Submittal for the purpose of fabrication or procurement of materials until the submittal process described herein is completed.

12.5 Intent of Accepted Plans and Specifications. There is no intent that these documents limit materials, equipment or fixtures to the product of any particular manufacturer. Where definite materials, equipment and/or fixtures have been specified by name, manufacturer or catalog number, it has been

SAMPLE DRAFT

done to set a definite standard and a reference for comparison as to quality, application, physical conformity, and other characteristics. It is TxDOT's and the Developer's intention to not discriminate against or prevent any dealer, jobber or manufacturer from furnishing materials, equipment, and/or fixtures which meet or exceed the characteristics of the specified items.

12.6 Substitution. Substitution of materials shall not be made without prior written approval from TxDOT, which approval shall not be unreasonably withheld or unduly delayed. If Developer disputes TxDOT's refusal to approve any such substitution, Developer shall nevertheless use the item designated by TxDOT but may assert a claim for a Change Order for increased cost or schedule delay incurred by reason of any unreasonable disapproval of substitution by TxDOT, which claim shall be resolved under Article XXVI. The claim must be supported by credible documentation.

12.7 Unauthorized Substitutions at Developer's Risk. All proposed substitution of materials, equipment or fixtures shall be presented through the submittal process except as permitted under Section 21.4. The Developer shall be financially responsible for any additional costs or delays resulting from using materials, equipment or fixtures other than those specified, and shall reimburse TxDOT for any increased administration costs resulting from such unauthorized substitutions. TxDOT shall provide the Developer with an itemized accounting of its costs due to unauthorized substitutions, which shall be paid by the Developer within ten (10) calendar days of its receipt.

Article XIII - Quality Control and Quality Assurance During Construction

13.1 Developer Quality Control. The Developer is responsible for controlling the quality of the work.

13.2 TxDOT Quality Assurance.

13.2.1 Site Visits. The Developer shall provide sufficient, safe and proper facilities at all reasonable times for observation and/or inspection of the Work by the authorized representatives of TxDOT. The TPM will perform weekly construction observations with written reports transmitted in a timely manner. The Developer shall schedule specific TPM or TxDOT observations prior to materials being covered without access for future visual observation. The Developer shall allow four (4) business days for the TPM or TxDOT to observe the Work so as not to delay the progress. These include but are not necessarily limited to the following:

a. Below grade site utilities, including storm and sanitary sewer, domestic water, storm sewer, electrical service, mechanical

SAMPLE DRAFT

systems piping, communications conduit all prior to placement and subsequently backfilling.

b. Installation of below building slab piping, mechanical, plumbing, and electrical systems and all specialty conduits.

c. Site pavement reinforcing prior to placement of concrete.

d. Structural reinforcing prior to placement of concrete inclusive of structural foundations.

e. Inspect all partitions before cover up (2-sided).

f. Inspect above all ceilings before cover up (ceiling tile or other material).

g. Metal decking prior to placement of roofing insulation or finish materials.

h. Roof insulation prior to placement of roofing membrane or standing seam metal roof.

i. Initial through-wall flashings and air-space cavity prior to placement of exterior skin materials.

j. Inspection of piping prior to placement of insulation.

13.2.2 Cost of Unauthorized Covering of Work. The Developer shall not cover up any work in Section 13.2.1 with finishing materials or other building components prior to an inspection of the work by TxDOT. Should corrections of such work be required, cover up shall be delayed until another inspection can be made and acceptance is indicated. Costs of delays, inspection and testing shall be borne pursuant to Article XI.

13.2.3 Notice. The Developer shall be responsible for providing notification of at least two (2) full state business days to TxDOT of the anticipated need for a cover up inspection required under Section 13.2.2. TxDOT will make the necessary inspection within the two (2) working day period, or as mutually agreed.

13.3. Condemnation and Removal of Defective Work. The TPM may recommend to reject and condemn Work, which does not meet the requirements of the Accepted Plans and Specifications and to order such work removed and replaced in accordance with this Article XIII. The acceptance of a work item does not relieve the Developer from compliance with the Accepted Plans and

SAMPLE DRAFT

Specifications where such requirements are not judged at the time of observation of the Work due to work sequences by the Developer or the lack of time to judge the performance characteristics of the particular work item. If any materials or Work furnished are condemned by TxDOT, the Developer shall, after notice from TxDOT, proceed to remove materials, whether worked or unworked, and to take down all portions of the Work condemned. The Developer shall make good all Work damaged or destroyed by its removal and replacement process. Upon notice of condemnation, the Developer believes it has complied, the Developer may challenge its responsibility for costs under such determination or may assert a claim for Change Order for increased cost or adjustment to the Project Schedule, in which event such dispute shall be resolved under Article XXVI. However, Developer shall not delay the removal/replacement of the condemned portions of the Work. The Developer must present credible documentation to support its claim or denial of responsibility.

Article XIV – DEA Payments

14.1 Contract Sum. As full compensation for the Work, the Developer shall be paid by the fixed price stipulated by value of the real property being exchanged **($18,455,000 - the "Contract Sum").** Except as specifically provided in this DEA, the Contract Sum shall not be adjusted. The Developer shall fund the entire amount of the Project. Increases or decreases in the Contract Sum as a result of approved Change Orders Sum (calculated in accordance with Article XXI), or as otherwise provided in this **DEA**, shall be paid to Developer or TxDOT, as applicable, in accordance with the provisions of this **DEA**. Decreases in the Contract Sum shall first be applied to increases in the Contract Sum. Any undisputed remaining amounts due from TxDOT for increases in the Contract Sum pursuant to approved Change Orders shall be paid by TxDOT to Developer within thirty (30) days of final completion. Any undisputed amounts due TxDOT from the Developer shall be reimbursed prior to final payment as a condition precedent.

14.2 Schedule of Values. Attached hereto as **Exhibit I** is a Schedule of Values for the Work. The **Exhibit I** Schedule of Values will be used as one of the criteria for determining whether there is a decrease or increase in the Contract Sum, notwithstanding disputed amounts subject to proceedings pursuant to Article XXVI.

14.3 Progress Reports. The Developer shall provide monthly progress reports to TxDOT for Work performed, and materials in place or suitably stored and protected on site on a percentage completed basis using the approved Schedule of Values.

SAMPLE DRAFT

14.3.1 Progress Reports. Each month, the Developer shall submit to TxDOT, a complete, Progress Report which shall attach the following:

a. The Developer's estimate of the percentage amount of Work performed, labor furnished and materials incorporated into the Work, using the approved Schedule of Values; and

b. Project Schedule update and HUB Subcontracting Plan Reports in the form as that attached hereto as **Exhibit L**.

14.3.2 Developer's Progress Report. As soon as practicable, but in no event later than seven (7) Calendar days after receipt of the Progress Report, the TPM shall meet with the Developer to review the Progress Report and to observe the condition of the Work. On the basis of this review, the TPM may require modifications to the Progress Report The TPM shall annotate the Progress Report to show any such required modifications, and any additional documentation required by TxDOT to support the Developer's Progress Report, consistent with the provisions of this **DEA**. As soon as practicable, but in no event later than seven (7) calendar days following the Progress review meeting, the Developer shall submit to TxDOT, a Progress Report reflecting required modifications with all additional documentation required by TxDOT to substantiate the percentage of completion of the Work, as well as an affidavit swearing or affirming that HUB reports, schedule updates and all payrolls, bills for labor, materials, equipment, subcontracted work or other indebtedness connected with the Developer's Progress Report have been paid or will be paid within the time specified in Chapter 2251, Government Code. No Progress Report shall be complete unless it fully reflects all required modifications, and attaches all required documentation including the Developer's affidavit. Documentation for subcontractors and suppliers invoices, modifications and all records relating to the Work shall be kept at the Developer's office.

14.3.3 State Audits. Pursuant to Government Code §2262.003, a state auditor may conduct an audit or investigation of any entity receiving funds from the state directly under this **DEA** or indirectly through a subcontract. Acceptance of funds under the **DEA** acts as acceptance of the authority of the state auditor to conduct an audit or investigation in connection with these funds. For purposes of this DEA, the funds are in the form of the monetary value of the real property to be exchanged, i.e. the Contract Sum. TxDOT or the State Auditor's Office may audit the Developer, its contractors,

SAMPLE DRAFT

subcontractors and other entities engaged by the Developer under this DEA, during regular business hours at the site(s) where records are kept of the entity being audited at no cost to the state.

14.3.4 Certification by the Developer. The Developer shall forward with the Periodic Invoice to TPM, a certificate that the percentage of Work represented by the Periodic Invoice is complete and credited toward the Contract Sum, or that it is incomplete, stating in particular what is missing. If the Periodic Invoice is incomplete, the Developer shall make the required modifications and resubmit the Periodic Invoice to the TxDOT for processing.

14.4 Title to Work. Title to all material and Work covered by this DEA transfers to TxDOT upon Final Payment, notwithstanding unresolved disputed claims that do no prevent Final Payment. Transfer of title to TxDOT does not waive the right of TxDOT to require the fulfillment of all the terms of the **DEA**.

14.5 No Release of Developer. All warranties and guarantees shall continue in effect as contemplated in this DEA.

Article XV - Closing Inspections

15.1 Substantial Completion Inspection. When the Developer considers the entire Work for each phase Substantially Complete, the Developer shall so notify the TPM in writing that the Work will be ready for Substantial Completion inspection. On the date indicated by Developer, or as soon thereafter as is practicable, the TPM, Developer, and Architect/Engineer shall inspect the Work and if the Architect/Engineer and TxDOT determine that the Work is Substantially Complete, the Architect/Engineer shall issue to the Developer and TxDOT, a Certificate of Substantial Completion fixing the date of Substantial Completion. The Architect/Engineer shall submit with this certificate a list of Punch List Items to be completed prior to Final Inspection. This list of Punch List Items may include additional items not included on the Developer's list provided under Section 8.6.7, which are deemed necessary by the Architect/Engineer and TxDOT to correct or complete prior to Final Inspection. Notwithstanding the foregoing, if TxDOT in good faith disagrees with the determination of the Architect/Engineer that Substantial Completion of the Work has been achieved and delivers written notice of such objection within ten (10) days after receipt of such certification, specifying the grounds on which TxDOT believes that Substantial Completion has not been achieved, Substantial Completion shall not be established until such dispute is resolved in accordance with the provisions of Article XXVI, hereof.

15.2 Final Inspection. The Developer shall fully complete the list of items listed on the Punch List prior to Final Inspection. Unless otherwise agreed in writing by the parties, the Developer shall complete the Punch List Items within the time

SAMPLE DRAFT

period set forth in Section 8.6.7. When the Developer has completed the Punch List, he shall give written notice to the TPM that the Work will be ready for Final Inspection on a date certain. On the designated date, or as soon thereafter as is practicable, the TPM, Architect/Engineer, and the Developer shall inspect the Work.

15.3 Final Punch List. The Developer shall fully complete the list of items on the Final Punch List prior to final inspection. When the Developer has completed the Final Punch List, he shall given written notice to the TPM that the Work is fully performed and ready for Final Inspection. The TPM and the Developer shall inspect the work within ten (10) calendar days.

15.4 Final Acceptance Certificate. When all the Punch List Items have been completed, and the Work is fully performed, then the TxDOT shall issue a final acceptance certificate fixing the date of Final Completion. TxDOT issuance of the final acceptance certificate shall be a condition precedent to the Developer's right to receive title to Existing TxDOT Property subject to Section 14.1.

15.5 Annotation. Any Certificate issued under this Article XV may be annotated to indicate that it is not applicable to specified portions of the Work.

15.6 Purpose of Inspection. Inspection by TxDOT, the Architect/Engineer and the Developer is for the purpose of determining the completion of the Work, and does not relieve the Developer of its overall responsibility for completing the Work in a good and workmanlike fashion, in compliance with the **DEA**. Failure of TxDOT to identify Work that is not in compliance or which is defective in operation or workmanship, or acceptance by TxDOT of Final Completion of the Work with Punch List Items left incomplete, does not constitute a waiver of such a defect or of TxDOT's rights under the **DEA** nor relieve the Developer of its warranties contained in Article XI and Article XVIII.

15.7 Certificate of Final Completion. Upon issuance of the Architect/Engineer's certificate fixing the date of Final Completion under Section 15.3, hereof, TxDOT shall execute and deliver Certificate in the form as that attached hereto as **Exhibit O**; provided that, if TxDOT in good faith disagrees with the determination of the Architect/Engineer that Final Completion has been achieved and delivers written notice of such objection within ten (10) days after receipt of such certification, specifying the grounds on which TxDOT believes that Final Completion has not been achieved, Final Completion shall not be established until such dispute is resolved in accordance with the provisions of Article XXVI, hereof. However, resolution of any dispute regarding Final Completion is a condition precedent to Final Payment.

SAMPLE DRAFT

ARTICLE XVI - RIGHT OF EARLY OCCUPANCY

16.1 Occupancy of Work Prior to Substantial Completion.

16.1.1 Notice and Early Occupancy Proposal. If TxDOT determines that substantial hardship will result if it is unable to occupy some portion of the Work prior to Substantial Completion, it shall so inform the Developer no less than ninety (90) days before the date TxDOT wishes to occupy the Work, and designate those portions of the Work to be occupied and the uses to be made of the occupied premises. As soon as practicable, but not less than five (5) working days after receiving this notice, the Developer shall make the designated portions of the Work available to TxDOT and the architect/engineer for observation. TxDOT shall observe the Work jointly with the Developer. As soon as practicable, but not later than the third day after the date of the inspection, the Developer shall prepare and submit to the TPM an Early Occupancy Proposal that specifies any Work that must be completed or corrected as well as any operation and maintenance manuals or other documentation necessary for the Work to be occupied by TxDOT and used for the purposes designated by TxDOT in its notice, and setting out the division of responsibility between TxDOT and the Developer for utilities, security, maintenance, insurance and liability for damage to the Work or damage arising from the condition of the Work. The Early Occupancy Proposal shall also specify whether the area to be occupied must be Substantially Complete before occupation, and shall specify the date for Substantial Completion of the Work to be occupied if other than the date previously specified by the **DEA**.

16.1.2 Administration as Change Order. The Early Occupancy Proposal shall be administered as a Change Order, except that the Developer shall submit a CPE as soon as possible, but not later than the seventh day next following receipt of the Early Occupancy Proposal. All cost adjustment, including any increased costs of insurance, related to the Early Occupancy Proposal, shall be stated in the CPE; any such relief not so requested shall be deemed waived. If within thirty (30) days after issuance of the Early Occupancy Proposal, TxDOT and Developer have not reached an agreement concerning adjustment of time or cost, or the division of responsibility for the occupied portions of the Work, TxDOT may issue a ULCO.

16.1.3 Project Completion Administration with Early Occupancy. Under the provisions of this Article the Project Schedule will be modified accordingly for any part of the Work due to early occupancy. All

SAMPLE DRAFT

required documentation shall be furnished by the Developer to the TPM on or before the date of occupation by TxDOT.

16.1.4 Non-waiver of Timely Completion. Early occupancy of any portion of the Work does not waive the Developer's duty to complete the remaining Work within the Project Schedule, as subsequently modified by Change Order.

Article XVII - Final Acceptance and Payment

17.1 Request for Final Payment. At any time following the date of Final Completion, but no later than thirty (30) days after such date, the Developer shall submit a certified Application for Final Payment to the Architect/Engineer, with copy to the TPM, for review and approval by TxDOT as set forth herein**.** However, no request for Final Payment may be made if there are unresolved disputed sums that are required to be resolved as a condition precedent to Final Payment.

17.2 Final Payment Documentation. The Developer shall submit, prior to or with the Application for Final Payment, all Close Out documents. The Developer shall also submit an affidavit that all payrolls, bills for materials and equipment, contracted/subcontracted work and other indebtedness connected with the Work have been paid or otherwise satisfied within the period of time required by Chapter 2251, Texas Government Code. If required by TxDOT, the Developer shall furnish documentation establishing payment or satisfaction of all such obligations, such as receipts, releases and waivers of claims arising out of the **DEA**, to the extent and in such form as may be reasonably designated by TxDOT.

17.3 Review. The Architect/Engineer and TPM shall review the Application for Final Payment promptly but in no event later than ten (10) days after its receipt. Prior to the expiration of this deadline, the TPM upon direction from TxDOT may return the Application for Final Payment to the Developer with TxDOT's requested corrections for action. If Developer timely receives any request for correction, Developer shall make such corrections and resubmit the Application for Final Payment. If Developer disputes any request by TxDOT for correction of the Application for Final Payment, such dispute shall be resolved in accordance with the provisions of Article XXVI, hereof. If TxDOT does not timely request correction of the Application for Final Payment, within such ten (10) day period, TxDOT shall be deemed to have approved the same. However, resolution of any dispute regarding the Application for Final Payment is a condition precedent to Final Payment.

17.6 Effect of Final Payment. Final Payment shall constitute a waiver of all claims by TxDOT relating to the condition of the Work except those arising from (1)

SAMPLE DRAFT

faulty or defective Work appearing after Substantial Completion (latent defects); (2) failure of the Developer to comply with the HUB requirements of the **DEA**; (3) terms of any special warranties required by the Contract Documents, and (4) claims arising from personal injury or property damage to third parties as a result of Developer's activities and/or activities of entities engaged by Developer for the Work; and (5) TxDOT's claims that are in the process of dispute resolution under Article XXVI prior to Final Payment. Final payment shall constitute a waiver of all claims by the Developer except those unresolved under Article XXVI that do not require resolution as a condition precedent to Final Payment.

Article XVIII – Developer's Warranty and Guarantee

18.1 Developer's General Warranty and Guarantee. The Developer warrants to TxDOT that all Work shall be executed in accordance with the **DEA**, complete in all parts and in accordance with approved practices and customs, and in good workmanship. This warranty shall continue in effect for twelve (12) months after the close of the performance period for the **DEA** has ended. All materials and equipment incorporated in the Work under the **DEA** shall be new. TxDOT may, at its option, agree in writing to waive any failure of the Work to conform to the **DEA**, and to accept a reduction in the Contract Sum for the cost of repair or diminution in value of the Work by reason of such defect. Absent such a written agreement, however, the Developer's obligation to perform and complete the Work in accordance with the **DEA** shall be absolute and is not waived by any inspection or observation by TxDOT, the TPM or others, by the use or occupancy of the Work or any portion thereof by TxDOT, at any time, or by any repair or correction of such defect made by TxDOT. Any amounts owning by the Developer, after offsets authorized in this DEA, shall be paid by Developer to TxDOT as a condition precedent to Final Payment.

18.2 Warranty Period. The respective warranty periods shall begin upon the issuance of Substantial Completion. Except as otherwise specified, the Developer shall repair all defects in materials, equipment or workmanship appearing within one (1) year from the date of Substantial Completion of the Work. Upon receipt of written notice from TxDOT of the discovery of any defects, the Developer shall promptly and at its own cost remedy the defects and replace any damaged property. In case of emergency where delay would cause serious risk of loss or damage to TxDOT, or if the Developer, after notice, fails to proceed promptly and remedy within thirty (30) days. If such defect cannot reasonably be cured within such thirty (30) days, or within such period of time as may have been agreed to as reasonably necessary to cure such defect, TxDOT may have the defects corrected and the Developer shall be liable for all expenses incurred.

SAMPLE DRAFT

18.3 Separate Warranties. Where a particular piece of equipment or component of the Work for which a separate warranty is required under the **DEA** is placed in continuous service before Substantial Completion, the date of service commencement shall be the date of Substantial Completion for the portion of the work serviced by the particular piece of equipment or component. In addition to the Developer's warranty and duty to repair, as set forth in §18.1 and §18.2, the Developer expressly assumes all warranty obligations required under the **DEA** for specific building components, systems and equipment. The Developer may satisfy any such obligation by obtaining and assigning to TxDOT a complying warranty from a manufacturer, supplier, or contractor/subcontractor. Where an assigned warranty is tendered and accepted by TxDOT which does not fully comply with the requirements of the **DEA**, the Developer shall remain liable to TxDOT on all elements of the required warranty that are not provided by the assigned warranty.

Article XIX- Good Faith Effort Subcontractor Program (HUBs) and Title VI Assurances

19.1 General Program Description. State agencies are required by statute to make a good faith effort to assist Historically Underutilized Businesses (HUBs) in participating in **DEA** awards issued by the State. TxDOT's rules, Texas Administrative Code, Title 43, Part Chapter 9, Subchapter D, outline the TxDOT's policy to encourage outreach to and potential utilization of HUBs in subcontracting opportunities through race, ethnic, and gender neutral means. The goal of this program is to promote full and equal business opportunity for all businesses in state contracting.

A Developer who contracts with the State in an amount in excess of $100,000 shall be required to make a good faith effort to award subcontracts to HUBs in accordance with the cited rules by submitting a HUB Subcontracting Plan and complying with the Subcontracting Plan after it is accepted by TxDOT and during the term of the **DEA**. The program goal for this Project is fifteen (15) percent of the Contract Sum or the amount of two million, seven hundred sixty eight thousand, four hundred fifty five dollars ($2,768,250) in subcontract awards to HUBs.

19.2 Compliance with Approved HUB Subcontractor Plan. The Developer, having been awarded this **DEA** in part by complying with the HUB Program statute and rules, hereby covenants to continue to comply with the HUB Program as follows:

The Developer shall:

a. Prior to substituting a Subcontractor, promptly notify TxDOT in the event a change is required for any reason to the accepted HUB Subcontracting Plan;

SAMPLE DRAFT

b. Conduct the good faith effort activities required and provide TxDOT with necessary documentation to justify approval of a change to the approved HUB Subcontracting Plan;

c. Cooperate in the execution of a Change Order or such other approval of the change in the HUB Subcontracting Plan as the Developer and TxDOT may agree to;

d. Maintain and make available to TxDOT upon request business records documenting compliance with the accepted HUB Subcontractor Plan;

e. Upon receipt of payment for performance of Work, the Developer shall submit to TxDOT a compliance report, in the format as that attached hereto as **Exhibit L,** that demonstrates Developer's performance of the HUB Subcontractor Plan; and

f. Promptly and accurately explain and provide supplemental information to TxDOT to assist in TxDOT's investigation of Developer's good faith efforts to fulfill the HUB Subcontractor Plan.

19.3 Failure to demonstrate Good Faith Effort. Upon a determination by TxDOT that the Developer has failed to demonstrate a good faith effort to fulfill the Subcontractor Plan or any **DEA** covenant detailed above, TxDOT will impose appropriate sanctions in accordance with Title 43 Texas Administrative Code Section 9.56 and Section 9.100, et. seq., which may include debarment.

19.4 Title VI Assurances. Nondiscrimination programs require that federal-aid recipients, sub-recipients, and contractors prevent discrimination and ensure nondiscrimination in all of their programs and activities, whether those programs and activities are federally-funded or not. Sub-recipients include all tiers of subcontractors, consultants and professional entities. In accordance with Title VI of the Civil Rights Act of 1964, 78 Stat. 252, 42 U.S.C. 2000d to 2000d-4, TxDOT will enforce compliance with this law, investigate alleged violations and affirmatively ensure that Developer does not be discriminate against employees or subcontractors and vendors on the grounds of race, color, national origin, sex, age or disability. Developer hereby adopts all assurances in **Exhibit M**, which are incorporated herein for all purposes and Developer further assures that all its contractors, subcontractors, consultants and professional entities at all tiers will be required to provide the same assurances as a contractual provision.

Article XX - Concealed Site Conditions

20.1 Developer's Duty to Inspect. The Developer is responsible for having visited the Sites and having ascertained pertinent local conditions such as location, accessibility, and general character of the Sites and the character and extent of environmental hazards or contamination at the time of the submission of its

SAMPLE DRAFT

proposal. Any failure to do so will not relieve the Developer from responsibility for successfully performing the Work without additional expense to TxDOT.

20.2 Unknown Conditions. If, in the performance of the **DEA**, subsurface, latent or concealed conditions (other than Force Majeure) at the Sites are found to be materially different from the information provided through the Developer's due diligence and from data available from the applicable utilities, or if unknown conditions of an unusual nature are discovered differing materially from the conditions usually inherent in Work of the character shown and specified, TxDOT shall be notified in writing of such conditions before proceeding with the Work. Developer shall develop a plan to deal with the condition and submit the same to TxDOT, and, if as a result of any such unforeseen condition, Developer incurs any additional cost in completing the Work or if the Project Schedule will be delayed, the parties shall execute a Change Order to adjust the Contract Sum and/or Contract Time, as appropriate. TxDOT reserves the right to hire a third party to perform remedial work and to dispute any claim by Developer based on unknown conditions pursuant to Article XXVI.

Article XXI - Change Orders

21.1 Effect. A Change Order is a written agreement, prepared by TxDOT, and entered into by the Developer and TxDOT after execution of the **DEA**. Only Change Orders signed by TxDOT's following staff: Director, Maintenance Division; Director, Maintenance Section, Maintenance Division; or Director, Facilities Management Section, Maintenance Division are authorized to allow an increase or decrease in the contract sum, increase or decrease in the original scope of work or an increase in the construction timetable. Authorization to sign a Change Order is reserved exclusively to TxDOT and may not be delegated to a private firm under contract to TxDOT. A Change Order signed by the Developer indicates its agreement with the modifications described in the Change Order, including the actual cost to accomplish the work and/or any adjustment in the Construction Time.

21.2 Adjustments (other than Final Payment under Article XVII). TxDOT, without invalidating the **DEA**, may order changes in the work consisting of additions, deletions, or other revisions. All such changes in the scope of work must be authorized by Change Order, and performed under the applicable conditions of the **DEA**. If such changes cause an increase or decrease in the Developer's costs, or an increase in the time required for performance of the work, a mutually agreeable adjustment should be made and confirmed in writing by Change Order. Overhead and profit can be included in the costs associated with work performed by Change Order that increases the Contract Sum. Any savings in overhead and profit, and other costs as a result of any

SAMPLE DRAFT

Change Order that decreases the Contract Sum must be returned to TxDOT in a deductive Change Order. Change Orders must be signed by all parties prior to starting any work covered by the Change Order. If a surety has assumed the responsibilities of the Developer, TxDOT will not pay the surety any profit or overhead for completion of the Work. Any increase or decrease in the Contract Sum, or increase or decrease in the Contract Time and changes in the scope of work require the signature of an authorized representative of TxDOT.

21.3 Unilateral Change Orders. TxDOT, without invalidating the **DEA**, may issue unilateral change orders for work it considers necessary for the completion of the Project. A ULCO is effective on receipt by the Developer and obligates the Developer to perform the Work according to its terms. TxDOT shall pay to Developer all increased costs incurred by Developer in performing the Work required under such ULCO and Developer shall be entitled to an extension of the Contract Time, to the extent of any delay caused by such ULCO. If TxDOT and Developer are not able to agree on a Change Order adjusting the Contract Sum and Contract Time as a result of any such ULCO, any such dispute shall be resolved in accordance with the provisions of Article XXVI. The Developer shall perform the Work under the ULCO regardless of the dispute.

21.4 No Cost Changes. TxDOT may request that Developer make a nonmaterial change (not material in relation to the intent of this **DEA** and Project Schedule) in the design and construction consistent with the intent of this **DEA** and not involving an extension of the Delivery Dates or adjustment in the Contract Sum.

21.5 Valuation of Change Orders. The value of changes in the work, either additive or deductive, executed under a Change Order, shall be determined in one of the following ways:

21.5.1. By acceptance of a lump sum proposal as defined by the following paragraphs.

a. Developer shall furnish TxDOT an itemized breakdown, in such detail and form as acceptable to TxDOT, of all costs and supporting information including but not limited to quantities, material prices, tier subcontracted work performed, labor rates and employer payments, and rental rates. The itemized breakdown detail shall be the same for any Subcontractor work. The Developer shall furnish TxDOT the following additional information in the itemized breakdown: Insurance charges and bond charges used in computing the lump sum proposal. This information shall also be provided for any Subcontractor work.

SAMPLE DRAFT

b. Costs shall include: Labor cost, including all classifications through foremen when engaged in the actual and direct performance of the work, and actual employer payments to or on behalf of workers for health and welfare, pension, vacation, insurance, and any similar charges imposed by law or required by applicable collective bargaining agreements; materials, installed permanently in the work or expended in performance thereof; rental cost of construction plant and equipment at the work sites; energy, fuel, and supplies consumed in operation of power-drive equipment and insurance. Cost shall also include necessary design and professional consulting fees and further revisions of previously finalized shop drawings and/or fabrication drawings unless stated otherwise in the Contract Documents. In lieu of providing information for all employer payments to or on behalf of workers, excluding actual gross wages, the Developer proposal may use a percentage factor, acceptable to TxDOT, which shall constitute full compensation for all employer payments other than actual gross wages. The Developer shall provide complete supporting information for calculation of the percentage factor(s) when so requested by TxDOT.

c. Costs shall not include profit or markups. Labor for superintendents, assistant superintendents, office personnel (home and field), timekeepers, and maintenance mechanics at any level of contracting; per diem and travel allowances for any of the aforementioned labor classifications; pieces of equipment, hand tools, or instruments having a new value of $500.00 or less, whether or not consumed by use; safety programs; on site and main offices and operating costs; modifications to record drawings; guarantee period cost allowances; and punch list allowances. These costs are deemed to be overhead costs.

d. For subcontracted work the Subcontractor will be allowed to add to the total costs, as defined in 21.5.1.b, for overhead and profit or markups an amount not to exceed the following percentages: Ten percent (10%) on the first $10,000.00, seven and one-half percent (7.5%) for the next $10,000.00 and five percent (5%) for on the balance over $20,000.00. For small change orders, the allowance for overhead and profit or markups will be a minimum of $50.00. On a Change Order, the Owner will not pay overhead and profit or markups to more than three tiers.

e. To the total cost of subcontracted work the Developer will be allowed to add the cost of any additional required Builders Risk Insurance and Bond.

SAMPLE DRAFT

f. On changes involving both additions and deletions, percentages for overhead and profit will be allowed only on the net addition.

21.5.2 By acceptance of unit prices named in the DEA or subsequently agreed upon.

21.6 Developer's Risk of Performance. Developer shall bear full responsibility for all risks affecting the Developer's cost of performance.

Article XXII - Administration of Change Order Requests

22.1 Requests for Changes.

22.1.1 Time Extension Requests. All relief related to excusable and compensable delays, including monetary compensation for any delay not caused by the Developer, shall be governed by the provisions of Article XXIV, and any time extension granted or compensation for delay shall be made pursuant to that Article. A single Change Order may be issued, adjusting both Contract Time and Contract Sum, where both arise from the same event.

22.1.2 Requests for Cost Adjustment. All requests for adjustment in the Contract Sum shall be made as follows:

When TxDOT wishes to order changes in the Work, the TPM shall submit to the Developer a Change Order Request (COR), consisting of a description of the request, including any sketches and description of the work as are reasonably necessary to inform the Developer of the nature of the change. Within fifteen (15) days of receipt of TxDOT's COR, the Developer shall submit a Change Order Proposal Evaluation (CPE) to the TPM, stating that the proposed change is a no-cost change, or proposing an adjustment in the Contract Sum and or Contract Time.

22.2 Processing Requests for Change.

22.2.1 Response to CPE. As soon as possible, but not more than ten (10) days after receipt of any CPE submitted by the Developer, TxDOT shall respond in writing by either (1) issuing a Change Order, (2) rejecting the same, (3) initiating negotiations with the Developer concerning the proposed cost adjustment and completing those negotiations within five (5) business days, or (4) requesting additional information.

SAMPLE DRAFT

22.2.2 Change Orders as Amendments. All effective change orders constitute amendments to the **DEA**.

Article XXIII - Time Allotted for Performance; Construction Schedules

23.1 Construction Time. The Contract Time will be measured from the date hereof to the Delivery Dates for each phase of the Work, including any modification by Change Order. Failure to achieve Substantial Completion of the Work within the Contract Time will subject the Developer to Liquidated Damages as provided in Section 8.6.3.

23.2 Project Schedule. The Project Schedule, provided by the Developer with input from TxDOT, attached hereto as **Exhibit K,** shows the dates for starting and completing the various component activities making up the Work, and the logical relationships between them. The schedule shall be, at a minimum, a Ganyy chart which shall be in a format and in sufficient detail to permit the Work to be completely managed and its progress monitored. The Developer shall also provide to the TPM for informational purposes a more detailed construction schedule utilizing the Critical Path Method which shall be in a format and in sufficient detail to permit the Work to be competently managed and its progress monitored. This construction schedule shall incorporate a schedule for Non-Developer Work, if and to the extent the TPM provides to Developer appropriate information with regard to the scope and schedule for such Non-Developer Work. The Developer shall also submit to the TPM for informational purposes a separate schedule, correlated with the Project Schedule that shows the dates the Developer intends to make all required submittals.

23.2.1 Schedule Updates. The Project Schedule mentioned above and attached hereto as **Exhibit K** shows the dates for starting and completing the various component activities making up the Work, and the logical relationships between them. The Project Schedule shall be updated not less than once a month to reflect progress to date, and current plans for completing the Work. The updated Project Schedule shall be submitted to TxDOT for review. The Developer shall show the anticipated date of completion reflecting all extensions of time granted as of the date of the update. The Project Schedule shall constitute the Developer's representation to TxDOT, that the Developer will follow the schedule as submitted and that all progress to date shown on the schedule is accurately depicted. Upon notice to TxDOT, the Developer may revise the Project Schedule at any time when, in the Developer’s judgment, it becomes necessary for the management of the Work, provided there is no increase in Contract Time or Contract Sum.

SAMPLE DRAFT

23.2.2 Effect of Schedule Submittal. Submittal of the Project Schedule, and successive updates or revisions is for the information of TxDOT and to permit the coordination of its activities with those of the Developer. TxDOT's review of a Project Schedule, update or revision does not indicate the approval of the Developer's proposed sequences and duration. TxDOT's review of a Project Schedule update or revision indicating late completion does not constitute consent to a late finish, or waive either the Developer's responsibility for timely completion or TxDOT's right to damages for the Developer's failure to do so.

Article XXIV - Modification of Contract Time

24.1 Delays of and Extension of Time. The Developer may be granted an extension of time because of Change Orders, Force Majeure or any cause beyond the Developer's control. The Developer, in the event of Force Majeure or any cause beyond the Developer's control not caused by TxDOT, Change Orders or Non-Developer Work shall be entitled to an extension of time but not an increase in the Contract Sum. All Contract Time modifications must be reflected on the Project Schedule within thirty (30) days of TxDOT's approval. Extensions of time based on Change Orders, Non-Developer Work or delays caused by TxDOT, other than for responses to Developer's notices or other documentation covered in this DEA, shall be provided in respective Change Orders or as determined under Article XVI.

24.2 Time Extension Requests. If the Developer believes that the completion of the Work has been delayed by a circumstance the Developer has reason to believe is not under its control, other than inclement weather, the Developer shall give TxDOT written notice, stating the nature of the delay and the activities potentially affected, within thirty (30) calendar days after the later of the onset of the event or circumstance giving rise to the delay or the date Developer first learns of such impact. Such claims should be accompanied by sufficient documentation for the delay. In the case of a continuing cause of delay, only one claim is necessary. Claims for extensions of time shall be stated in numbers of whole calendar days. The Developer and TxDOT recognize and agree that it is beneficial to each to identify delays and make necessary schedule adjustments promptly, and that a Project Schedule prepared and updated by the Developer provides an effective tool for measuring and tracking the impact of delays.

24.3 Contents of Time Extension Requests. Each Time Extension Request shall be accompanied by a quantitative demonstration of the impact of the delay on project completion time, based on the current Project Schedule. Time Extension Requests shall include a

SAMPLE DRAFT

reasonably detailed narrative setting forth (1) the nature of the delay and its cause, (2) the basis of the Developer's claim of entitlement to a time extension, (3) documentation of the actual impacts of the claimed delay, and any concurrent delays, (4) description and documentation of steps taken by the Developer to mitigate the effect of the claimed delay, including, when appropriate, the modification of the Project Schedule, and (5) such other information that the Developer considers necessary to justify its claim for an extension of time.

24.4 TxDOT's Response. TxDOT shall respond to the Time Extension Request by providing to the Developer written notice of the number of days granted, and giving its reason if this number differs from the number of days requested by the Developer. Such an Extension of Time is effective on the date TxDOT's notice is received by the Developer, but a Change Order reflecting the Extension of Time shall be executed by the parties in accordance with Article XXI. TxDOT will respond to each properly submitted Time Extension Request within fifteen (15) calendar days following its submittal; if TxDOT cannot reasonably make a determination about the Developer's entitlement to a time extension within that time, TxDOT shall so notify the Developer in writing. Any dispute shall be resolved in accordance with Article XXVI. A decision in favor or TxDOT shall result in payment of liquidated damages. A decision in favor of the Developer shall result in relief from payment of iquidated damages.

24.3 Suspension of Work for Cause. TxDOT may, at any time without prior notice, suspend all or any part of the Work, if, in TxDOT's reasonable opinion, it is considered reasonably necessary to do so to prevent or correct, any condition of the Work, which constitutes an immediate safety hazard, or which may reasonably be expected to impair the integrity, usefulness or longevity of the Work when completed. TxDOT shall give Developer written prior notice of any such determination and afford Developer at least thirty (30) days to cure or correct such condition. If such condition cannot reasonably be cured within such thirty (30) day period, such thirty (30) day period shall be extended for a reasonable period of time so long as Developer has within such thirty (30) day period commenced curing the same and thereafter diligently pursues curing the condition. TxDOT shall give the Developer a written notice of suspension for cause, setting forth the reason for the suspension and identifying the Work to be suspended. Upon receipt of such notice, the Developer shall immediately stop the Work so identified. As soon as practicable following the issuance of such a notice, TxDOT shall initiate and complete an investigation of the circumstances giving rise to the suspension, and shall issue a written determination of their cause. The Developer will not be entitled to an

SAMPLE DRAFT

extension of time or compensation for delay resulting from a suspension if the cause was within the control of the Developer. Developer shall be charged liquidated damages and/or bear the cost of remedy, as appropriate. If the cause is determined not to have been within the control of the Developer, and the suspension prevents the Developer from completing the Work within the Construction Time, the Developer may be entitled to a Change Order increasing the Contract Sum and/or extending the Construction Time caused by any such suspension of Work. Suspensions of work under this provision shall be no longer than is reasonably necessary to identify and remedy the conditions giving rise to the suspension. If TxDOT and Developer do not agree on the validity of any Work stop order issued by TxDOT or on Developer's entitlement to an adjustment to the Contract Sum and/or Contract Time, such dispute shall be resolved pursuant to the provisions of Article XXVI.

Article XXV - Termination and Suspension of the DEA Prior to Completion

25.1 Termination by TxDOT for Cause. TxDOT may, without prejudice to any right or remedy terminate the employment of the Developer and take possession of the Site(s) and of all materials, equipment, tools, construction equipment and machinery thereon owned by the Developer, under the following circumstances:

a. Persistent or repeated failure or refusal, except during complete or partial suspensions of work authorized under the Contract Documents, to supply enough properly skilled workmen or proper materials;

b. Persistent disregard of laws, ordinances, rules, regulations or orders of any public authority having jurisdiction;

c. Persistent failure to prosecute the work in accordance with the **DEA**, and to insure its completion within the time, or any extension thereof, specified in this **DEA**;

d. Failure to remedy defective work condemned by the TPM pursuant to Article XIII;

e. Failure to pay subcontractors, laborers, materialmen and suppliers pursuant to Texas Government Code Chapter 2251;

f. Persistent endangerment, by the Developer or its Subcontractors or other vendors, of the safety of labor or of the Work itself;

SAMPLE DRAFT

g. Failure to supply or maintain statutory bonds, pursuant to Article V, or the supply or maintain required insurance, pursuant to Articles VI and VII; or

h. Any other material breach of the **DEA**.

TxDOT reserves the right to terminate at any time for any of the above listed causes. Failure to exercise the right to terminate in any instance or for any proper reason shall not be construed as waiver of the right to do so in any other instance or for any other proper reason.

25.1.1 TxDOT shall give the Developer and its Surety thirty (30) days' prior written notice of its intent to terminate for any of the above reasons. If the Developer or the Surety demonstrates, to the reasonable satisfaction of TxDOT, that the condition or conditions upon which the notice of termination is based have been removed, corrected, or will not recur, within thirty (30) days after receipt of TxDOT's notice, provided that if any such default cannot reasonably be cured within such thirty (30) day period, such thirty (30) day period shall be extended for a reasonable period of time; provided, further, that Developer has within such thirty (30) day period commenced to cure such default and thereafter diligently pursues curing the same, then TxDOT shall rescind the notice and the **DEA** shall continue unmodified, and the Developer shall not be entitled an extension of time.

25.1.2 Should the Developer or the surety fail to so demonstrate within thirty days following receipt of such notice (or such longer period as may be reasonably necessary, so long as Developer or its surety is diligently pursuing such cure), or fail to reasonably satisfy TxDOT that the condition or conditions upon which the notice of termination is based have been removed, corrected, or will not recur, TxDOT may arrange for completion of the Work and deduct the cost thereof from the unpaid Contract Sum remaining, including the cost of additional Architect/Engineer services made necessary by such default or neglect, in which event no Final Payment shall then be made by TxDOT. If the cost of finishing the Work exceeds the Contract Sum, including compensation for the Architect/Engineer's additional services made necessary thereby, TxDOT shall avail itself of its legal remedies. The termination of the **DEA** for cause does not relieve the Developer or surety from financial obligations. If the **DEA** is terminated for cause, TxDOT reserves the right, to assume any or all contracts between the Developer and the Architect/Engineer and between the Developer and its Subcontractors, vendors and suppliers. TxDOT shall

SAMPLE DRAFT

promptly notify the Developer of the contracts TxDOT elects to assume. Upon receipt of such notice, the Developer shall promptly take all steps necessary to effect such assignment.

25.2 Termination by Developer. If the Work is stopped for a period of sixty (60) days under an order of any court or other public authority having jurisdiction, or as a result of an act of government, such as a declaration of a national emergency making materials unavailable, through no act or fault of the Developer or a contractor, subcontractor or their agents or employees or any other persons performing any of the Work under a contract with the Developer, then the Developer may, upon thirty (30) additional days' written notice to the TPM, terminate the **DEA** and recover from TxDOT payment for all Work, subject to appropriation, executed and for any provable loss and reasonable expenses attributable to the Work resulting from such termination. If the cause of the work stoppage is removed prior to the end of the thirty (30) day notice period, the Developer may not terminate the **DEA**.

25.3 Rescission. TxDOT may rescind the DEA prior to or during construction in the event of discovery of latent conditions on the Existing TxDOT Properties that are intended to be exchanged or the construction Sites, that will materially affect the Contract Sum. Payment to Developer for work perfomed in furtherance of this DEA shall be made in accordance with paragraph 25.2. and other provisions of this DEA regarding costs, subject to appropriations.

25.3 Settlement on Termination. When the **DEA** is terminated for any reason, the Developer shall, at any time prior to one hundred eighty (180) calendar days of the effective date of termination, submit a final termination settlement proposal to TxDOT based upon recoverable costs as provided herein. If the Developer fails to submit the proposal within the time allowed, TxDOT may, if supported by legally sufficient documentation, determine the amount due to the Developer because of the termination and shall pay the determined amount to the Developer, subject to appropriations, or dispute such costs pursuant to Article XXVI.

Article XXVI - Dispute Resolution

26.1 Contract Claim Committee. This committee shall resolve any claims between TxDOT and the Developer pursuant to Title 43 Texas Administrative Code Section 9.2. All claims shall be brought before the Contract Claim Committee in accord with this rule.

26.2 Condition Precedent to Formal Administrative Hearing. Compliance by the Developer with subsection 26.1 is a condition precedent to the filing of a contested case proceeding under Government Code Chapter 2001.

SAMPLE DRAFT

26.3 Condition Precedent to Seeking Consent to Sue. Compliance with the contested case process provided in Government Chapter 2001 is a condition precedent to seeking consent to sue from the Legislature under Chapter 107 of the Texas Civil Practices and Remedies Code.

26.4 Continued Performance. Neither the occurrence of a disputed event nor the pendency of a claim constitutes grounds for the suspension of performance by the Developer, in whole or in part.

Article XXVII – Miscellaneous

27.1 Written Notice. All notices, demands and other communications shall be in writing and may be faxed, hand delivered, sent by courier or United States certified or registered mail and respective proof of delivery shall evince receipt thereof on the date indicated to the parties, addressed as follows:

To Developer: ("**DEVELOPER NAME"**)
Address
City, State Zip
Attention: ("DAR")
Phone: (Area Code) Number
FAX: (Area Code) Number

To TxDOT: Texas Department of Transportation
MNT - Facilities Management
125 E. 11th Street
Austin, Texas 78701-2483
Attention: <NAME>
Phone: (000) (000-0000)
FAX: (000)000-0000

27.2 Computation of Time. In computing any time period set forth in this **DEA**, the first day of the period shall not be included, but the last day shall be included.

27.3 Survival of Obligations. All representations, indemnifications, warranties and guarantees made in accordance with the **DEA** Documents will survive Final Payment, completion and acceptance of the Work, as well as termination for any reason. All duties imposed upon the Developer by reason of termination, including without limitation the duty, upon notice by TxDOT, to assign contracts with contractors, subcontractors, vendors and suppliers, shall likewise survive the termination of the **DEA**.

27.4 No Waiver of Performance. The failure of either party in any instance to insist on the performance of any of the terms, covenants or conditions of the

SAMPLE DRAFT

DEA Documents, or to exercise any of their respective rights, shall not be construed as waiver of any such term, covenant, condition or right with respect to further performance by either party.

27.5 Governing Law. This **DEA** shall be governed by the law of the State of Texas.

27.6 Venue. Venue for any cause of action by either party shall be in a court of competent jurisdiction in **Travis** County, Texas.

27.7 Captions. The captions used throughout the **DEA** are for ease of reference only and have no effect on the meaning of the terms and conditions set forth herein.

27.8 Independent Developer Status. The **DEA** Documents create an independent Developer relationship between TxDOT and Developer and neither party's employees or Developers shall be considered employees, Developers, partners or agents of the other party.

27.9 No Third Party Beneficiaries. The parties do not intend, nor shall any clause be interpreted to create in any third party, any obligations to, or right of benefit by, such third party under these **DEA** Documents from either TxDOT or Developer.

27.10 Entire Agreement. These **DEA** Documents supersede in full all prior discussions and agreements (oral and written) between the parties relating to the subject matter hereof and constitutes the entire **DEA**.

27.11 Assignment. This **DEA** may not be assigned by either party without the prior written consent of the other, except either party may, upon notice to the other party but without the other party's consent, assign this **DEA** to a present or future affiliate or successor, provided that any such assignment by the Developer shall be contingent on ("**DEVELOPER NAME"**) an Absolute Guaranty of performance by its assignee and assignor. If applicable, TxDOT hereby consents to the assignment of ("**DEVELOPER NAME"**) interest under this Agreement to ("**DEVELOPER NAME"**) since ("**DEVELOPER NAME"**) shall execute and deliver its Absolute Guaranty to TxDOT of even date herewith.

27.12 Severability. If any provision, sentence, clause or article of this **DEA** is found to be invalid or unenforceable for any reason, the remaining provisions shall continue in effect as is the invalid or unenforceable provision were not in the **DEA**. All provisions, sentences, clauses and articles of this **DEA** are severable for this purpose.

SAMPLE DRAFT

27.13 Parties Bound. Execution of this **DEA** by each party binds the entity represented as well as its employees, agents, successors and assigns to its faithful performance.

27.14 Sovereign Immunity. The State does not waive sovereign immunity from suit or liability except to the extent that the Texas Tort Claims Act (Civil Practice and Remedies Code Chapter 101) or except as otherwise provided by other applicable constitutional, statutory or case law.

27.15 Purchasing Preferences. The Developer shall use products and materials produced in Texas for this Project when they are available at a price and time comparable to products and materials used outside this state, pursuant to Government Code Section 2155.4441.

27.16 Detailed Records. All documents and records relating to the Project shall be maintained by the Developer for a period of four (4) years after the date of submission of the final invoice or until the resolution of all billing issues and disputes, whichever is later. The Developer shall promptly make available at reasonable times upon reasonable notice and for reasonable periods all information related to the Project for purposes of auditing, inspecting, monitoring, or evaluating by TxDOT, the State of Texas or its authorized representatives. The Developer shall ensure that these requirements are included in any subcontracts it awards.

27.17 Forms. Developer shall use all applicable TxDOT forms for all submissions of required documents and reports.

27.18 Amendments. Any amendments to this DEA shall be made in writing and executed by each party's authorized signatory.

Article XXVIII – Indemnification

28.1 DEVELOPER COVENANTS AND AGREES TO FULLY INDEMNIFY AND HOLD HARMLESS, TXDOT, ITS EMPLOYEES, OFFICERS, DIRECTORS, VOLUNTEERS, AND REPRESENTATIVES, INDIVIDUALLY OR COLLECTIVELY, FROM AND AGAINST ANY AND ALL COSTS, CLAIMS, LIENS, DAMAGES, LOSSES, EXPENSES, FEES, FINES, PENALTIES, PROCEEDINGS, ACTIONS, DEMANDS, CAUSES OF ACTION, LIABILITY AND SUITS OF ANY KIND AND NATURE, INCLUDING BUT NOT LIMITED TO, ENVIRONMENTAL DAMAGE, PERSONAL OR BODILY INJURY, DEATH AND PROPERTY DAMAGE, MADE UPON TXDOT DIRECTLY OR INDIRECTLY ARISING OUT OF, RESULTING FROM OR RELATED TO DEVELOPER'S ACTIVITIES UNDER THIS DEVELOPMENT AND EXCHANGE AGREEMENT, INCLUDING

SAMPLE DRAFT

(i) ANY ERRORS, OMISSIONS OR NEGLIGENT ACTS OF DEVELOPER, ANY OF ITS SUBCONTRACTORS, AGENTS, OFFICERS, DIRECTORS, REPRESENTATIVES, EMPLOYEES, CONSULTANTS, INVITEES, AND THEIR RESPECTIVE OFFICERS, AGENTS, EMPLOYEES, DIRECTORS AND REPRESENTATIVES WHILE IN THE EXERCISE OF PERFORMANCE OF THE RIGHTS OF DUTIES UNDER THIS DEA;

(ii) ANY CLAIM ARISING FROM VIOLATION OF ANY LAW, ORDINANCE OR REGULATION BY DEVELOPER, ITS SUBCONTRACTORS, AGENTS , OFFICERS, DIRECTORS, REPRESENTATIVES, INVITEES OR EMPLOYEES;

(iii) ANY SUITS OF CLAIMS FOR INFRINGEMENT OF ANY PATENT OF COPYRIGHT, ARISING WITH RESPECT TO THE DEVELOPER'S PROCESS IN THE FORMULATION OF ITS BID OF PERFORMANCE OF THE WORK OR OTHERWISE ARISING IN CONNECTION THEREWITH;

(iv) DEVELOPER, DEVELOPER'S EMPLOYEES, AGENTS, OFFICERS, DIRECTORS, REPRESENTATIVES, SUBCONTRACTORS, INVITEES OR ANY OTHER PERSON OCCUPYING THE PROPERTIES OR ANY PORTION THEREOF BY, THROUGH, OR UNDER DEVELOPER (BUT EXCLUDING TXDOT AND ITS EMPLOYEES, AGENTS, REPRESENTATIVES, CONTRACTORS, SUBCONTRACTORS, INVITEES OR ANY OTHER PERSON OCCUPYING THE PROPERTY OR ANY PORTION THEREOF BY, THROUGH OR UNDER TXDOT)

(v) BRINGING OR DISPOSING ANY HAZARDOUS MATERIALS ONTO OR WITHIN THE PROPERTY, WITHOUT LIMIT AND WITHOUT REGARD TO THE CAUSE OR CAUSES THEREOF OR THE NEGLIGENCE OF ANY PARTY OR PARTIES OTHER THAN TXDOT AND ITS EMPLOYEES, AGENTS, REPRESENTATIVES, CONTRACTORS, SUBCONTRACTORS, INVITEES OR ANY OTHER PERSONS OCCUPYING THE PROPERTY OR ANY PORTION THEREOF BY, THROUGH OR UNDER TXDOT, ON ACCOUNT OF CLEAN-UP, ABATEMENT, AND/OR DISPOSAL COSTS, FINES, AND/OR PENALTIES INCURRED OR CHARGED DUE TO PRESENCE OF SUCH HAZARDOUS MATERIALS, PROPERTY DAMAGE AND/OR PERSONAL INJURY SUSTAINED OR ALLEGED TO HAVE BEEN SUSTAINED BY ANY PERSON OR PERSONS AND THE COSTS OF REMOVING ANY LIEN PLACED ON THE PROPERTY AS A RESULT THEREOF;

SAMPLE DRAFT

(vi) THE FAILURE OF ANY SURETY TO HONOR ANY STATUTORY PAYMENT OR PERFORMANCE BOND PROVIDED UNDER THIS DEA;

(vii) THE FAILURE OF ANY INSURER TO COVER ANY INSURED LOSSES; AND

(viii) ANY MECHANICS OR CONSTRUCTION LIENS ARISING AS A RESULT OF THE WORK.

28.1.1 THE PROVISIONS OF THIS INDEMNIFICATION ARE SOLELY FOR THE BENEFIT OF THE PARTIES HERETO AND TXDOT'S SUCCESSOR OR ASSIGNEE, IF ANY, AND NOT INTENDED TO CREATE OR GRANT ANY RIGHTS, CONTRACTUAL OR OTHERWISE, TO ANY OTHER PERSON OR ENTITY.

28.1.2 THE DEVELOPER SHALL PROMPTLY ADVISE TXDOT IN WRITING OF ANY CLAIM OR DEMAND AGAINST TXDOT OR DEVELOPER KNOWN TO THE DEVELOPER WHICH IS RELATED TO OR ARISING OUT OF THE DEVELOPER'S ACTIVITIES UNDER THIS DEA.

28.1.3 THE INDEMNITY PROVIDED FOR IN THIS PARAGRAPH SHALL NOT APPLY TO ANY LIABILITY RESULTING FROM THE NEGLIGENCE OF TXDOT, ITS OFFICERS OR EMPLOYEES, WHERE SUCH NEGLIGENCE CAUSES PERSONAL INJURY, DEATH, OR PROPERTY DAMAGE. IN THE EVENT DEVELOPER AND TXDOT ARE FOUND JOINTLY LIABLE BY A COURT OF COMPETENT JURISDICTION, LIABILITY SHALL BE APPORTIONED COMPARATIVELY IN ACCORDANCE WITH THE LAWS OF THE STATE OF TEXAS, AND WITHOUT WAIVING ANY DEFENSES OF THE PARTIES UNDER TEXAS LAW.

SAMPLE DRAFT

Signatory Warranty. The signatories hereto warrant that each has the authority to enter in to this **DEA** on behalf of the party represented.

IN WITNESS WHEREOF, the parties have hereunto affixed their signatures effective as of the date first written above and bind themselves to the faithful performance of this **DEA**.

<Developer Name>

By: _____
Signature

_____
Title

_____
Printed Name

Texas Department of Transportation

Executed and approved for the Texas Transportation Commission for the purpose and effect of activating and/or carrying out the orders, and established policies or work programs heretofore approved and authorized by the Texas Transportation Commission.

By: _____
Executive Director
Texas Department of Transportation

_____
Printed Name

APPROVAL RECOMMENDED:

_____
Director of Maintenance Division

_____
Printed Name

_____
Date

SAMPLE DRAFT

STATE OF TEXAS §

COUNTY OF _____ §

On this ___ day of _____, 2010, before me, a Notary Public in and for said County, personally appeared _____, the _____ of ("**DEVELOPER NAME"**) known to me to be the person whose name is subscribed to the within **DEA**, and acknowledged to me that he executed the same on behalf of ("**DEVELOPER NAME"**)

(SEAL)

_____
NOTARY PUBLIC IN AND FOR THE
STATE OF TEXAS

My Commission Expires:
_____

_____
Notary Name Typed or Printed

STATE OF TEXAS §

COUNTY OF TRAVIS §

On this ___ day of _____, 2010, before me, a Notary Public in and for said County, personally appeared _____, the _____ of the Texas Department of Transportation, known to me to be the person whose name is subscribed to the within **DEA**, and acknowledged to me that he executed the same on behalf of Texas Department of Transportation.

(SEAL)

_____
NOTARY PUBLIC IN AND FOR THE
STATE OF TEXAS

My Commission Expires:
_____

_____
Notary Name Typed or Printed

SAMPLE DRAFT

EXHIBIT A
Arlington, Tarrant County

The Texas Department of Transportation is the owner of certain property without improvements located 1608 North Collins Street, Arlington, Tarrant County, more particularly described by metes and bounds as follows:

BEGIN a 18.37 acre tract of land located in the G.W. Ragan Survey, Abstract No. 1288, in the City of Arlington, Tarrant County, Texas, said tract being part of a called 67.78 acre tract described by deed to the State of Texas, as recorded in Volume 2927, Page 199, Deed Records Tarrant County, Texas, (DRTCT) and being more particularly described by metes and bounds as follows (bearing referenced to the State Plane Coordinate System, North Central Zone, NAD 1983, as determined by VRS – GPS observations, distances show are surface values):

COMMENCING at point for the most northerly corner of said State of Texas parcel, same being on the west right of way (ROW) for FM157 variable width ROW as described by deed to the State of Texas recorded in Volume 1860, Page 107, DRTCT, and being a point in the easterly ROW for Ryan Plaza Drive (50' ROW) as dedicated by Parkway Central Addition, an addition to the City of Arlington as recorded in Volume 388-53, Page 96, Plat Records Tarrant County Texas (PRTCT), said point being located South 00°36'32" West, a distance of 373.83 feet from a ½-inch iron rod found for the common easterly corner for Lots 1 and 2, Block 1, Park Central Addition, an addition to the City of Arlington as recorded in Volume 388-57, Page 609 PRTCT;

THENCE South 00°10'05" East, with the west ROW for FM157 and the east line of said 67.78 acre tract, a distance of 261.65 feet to a point;

THENCE South 88° 15'19" West, a distance of 8.83 feet to a set 5/8-inch iron rod with yellow plastic cap marked "SAM INC" (set iron rod) for the POINT OF BEGINNING, said point being located at FM157 centerline station 614+61.71, 58.8" left;

THENCE southerly, generally 30-feet west of and parallel to or concentric with the proposed west back of curb for FM157 as follows;

THENCE South 01°44'41" East, a distance of 191.59 feet to a set iron rod for the beginning of a curve;

THENCE southerly along the arc of said curve to the right, having a central angle of 04°00'42", a radius of 1920.00 feet, an arc length of 134.43 feet and a chord of South 00°15'40" West, 134.40 feet to a set iron rod for the end of said curve.;

THENCE South 02°16'01" West, a distance of 200.00 feet to a PK nail set for the beginning of a curve;

SAMPLE DRAFT

THENCE southerly along the arc of said curve to the right, having a central angle of 09°59’57”, a radius of 320.00 feet, an arc length of 55.85 feet and a chord of South 07°15’59” West,
55.78 feet to a set iron rod for the end of said curve;

THENCE South 12°15’58” West, a distance of 32.86 feet to a set iron road for corner;

THENCE South 89°44’54” West, leaving said parallel alignment, a distance of 7.44 feet to a point for corner;

THENCE South 00°15’06” East, a distance of 36.27 feet to a set iron rod for corner;

THENCE North 89°44’54” East, a distance of 5.00 feet to a set road for corner;

THENCE South 00°15’06” East, generally along the west face of a series of existing wooden poles for an ONCOR power line, a distance of 310.54 feet to a set iron road for the beginning of a curve;

THENCE southwesterly along the arc of said curve to the right, having a central angle of 89°38’27”, a radius of 20.00 feet, an arc length of 31.29 feet, and a chord of South 44°34’08” West, 28.20 feet to a set iron rod for the end of said curve;

THENCE South 89°25’33” West, being 20-feet north of and parallel to the proposed north edge of pavement for the west bound service road for IH 30 (variable width ROW), a distance of 802.77 feet to a set iron rod for corner;

THENCE North 77°22’ 27” West, a distance of 387.98 feet to a PK nail set for corner;

THENCE North 14°56’54” West, a distance of 269.08 feet to a set iron rod for the beginning of a non-tangent curve;

THENCE northeasterly along the arc of said curve to the right, being 20-feet south of and concentric to the existing south curve line for Ryan Plaza Drive (undefined ROW), having a central angle of 54°17’10”, a radius of 68.00 feet, an arc length of 64.43 feet and a chord of North 62°18’02” East, 62.05 feet to a set iron rod for the end of said curve;

THENCE northeasterly, generally 20 feet south of and parallel to or concentric with said south curb line as follows:

THENCE North 89°25’34” East, a distance of 65.91 feet to a set iron rod for the beginning of a curve;

SAMPLE DRAFT

THENCE along the arc of said curve to the left, having a central angle of 45°13’29”, a radius of 695.00 feet, an arc length of 548.58 feet and a chord of North 66°48’50” East, 534.45 feet to a set iron rod for the end of said curve;

THENCE North 44°12’05” East, a distance of 237.18 feet to a set iron road for the beginning of a curve;

THENCE along the arc of said curve to the right, having a central angle of 16°25’32”, a radius of 605.00 feet, an arc length of 173.44 feet and a chord of North 52° 24’51” East, 172.85 feet to a set iron rod for the end of said curve;

THENCE North 60°33’46” East, a distance of 253.76 feet to a set iron rod for the beginning of a non-tangent curve;

THENCE along the arc of said curve to the right, having a central angle of 28°38’30”, a radius of 255.00 feet, an arc length of 127.47 feet and a chord of North 74°55’24” East, 126.15 feet to a set iron road for the end of said curve;

THENCE South 46°15’55” East, a distance of 42.78 feet to the POINT OF BEGINNING and containing 18.37 acres.

SAMPLE DRAFT

Exhibit B
Fort Worth District Headquarters

The Texas Department of Transportation is the owner of certain property without improvements located at 2501 Southwest Loop 820,Fort Worth, Tarrant County, more particularly described by metes and bounds as follows:

Being all of that certain 40.6475 acres of land situated in the M.J. Arocha Survey, Abstract I and the J.B.M. Smith Survey Abstract 1412, City of Fort Worth, Tarrant County, Texas, and being a portion of that certain called 35.312 acre tract of land conveyed to the State of Texas by instrument recorded in
Volume 2920, Page 218 of the Deed Records, Tarrant County, Texas; A portion of Lot 4-R, Block I, Wedge Hills Subdivision, an addition to the City of Fort Worth as shown on a plat recorded in
Volume 388-111, Page 78, Plat Records, Tarrant County, Texas, and being all of that called 6.154 acre Tract of land conveyed to the State of Texas by instrument recorded in Volume 9277, Page 1989, said Deed Records and further described as follows:

BEGINNING at a 5/8-inch iron rod with cap stamped “SURVCON” set for the northeasterly corner of said 35.312 acre tract being on the southerly line of Interstate 20 (a variable width right of way (ROW)), as conveyed to the State of Texas by instrument recorded in Volume 2724, Page 33, said deed records, same being on the westerly ROW of the Gulf Colorado and Santa Fe Railroad (an apparent 100-foot wide ROW no deed of record found);

THENCE South 01° 25’ 24” West along said westerly line, passing a PK nail set at a chain link fence post at 1945.32 feet and continuing for a total distance of 1955.32 feet to the northerly ROW line of Edgecliff Road (a variable width ROW, 50 foot wide at this point) as shown on plat of Wedge Hills Subdivision, an addition to the City of Fort Worth, as shown on plat recorded in Volume 388-10, Page 33, Plat Records, Tarrant County, Texas;

THENCE South 89° 30’ 20” West, along said northerly line, 106.23 feet;

THENCE North 01° 35’ 40” West, passing a PK nail set in concrete for the southeasterly corner of Lot 5-R, Block 1, Wedge Hill Subdivision, an addition to the City of Fort Worth, as shown on plat recorded in Volume 388-III, Page 78 of said plat records at 10.19 feet and continuing for a total distance of 209.02 feet to a ½-inch iron rod with cap stamped “Landes and Associates” found for the common easterly corner of Lots 4-R and 5-R, said Block 1;

THENCE South 89° 31’ 54” West, along the common line of said lots, 200.05 feet to a ½-inch iron rod with cap stamped “Landes and Associates” found for a common corner of said lots;

SAMPLE DRAFT

THENCE South 01° 34’ 06” East, along the common line of said lots, 199.11 feet to a 5/8–inch iron rod with cap stamped “SURVCON” set on the aforesaid northerly ROW line of Edgecliff Road;

THENCE, along said northerly line the following three courses:

1) South 89° 30’ 20” West, 152.99 feet to a point from which a 5/8-inch smooth iron rod found bears south 00° 05’51” West, 1.0 feet and being the beginning of a curve to the right whose center bears north 00°29’40” West;

2) Westerly 133.81 feet along the arc of said curve to the right, having a central angle of
1° 00’ 00” and a radius of 697.00 feet to a point from which a 5/8–inch smooth iron rod found bears south 00°03°37’ West, 11 feet;

3) North 79° 29’ 40” West, 91.30 feet to a 5/8-inch iron rod with cap stamped “SURVCON” set for the common southerly corner of said Lot 4-R and Lot 1, Block 1, Wedge Hills Subdivision, an addition to the City of Fort Worth, as shown on map recorded in Volume 388-45, Page 5, said deed records;

THENCE, North 01° 34’ 06” West, along the common line of said Lot 4-R and Lot I, 212.75 feet to a 5/8-inch smooth iron rod found;

THENCE North 89° 29’ 54” East, 15.00 feet to a PK nail set at a chain link fence post;

THENCE North 01° 34’ 06” West, 262.40 feet to a PK nail set at a chain link fence post;

THENCE South 89° 23’ 54”, 15.00 feet to a 5/8-inch iron rod found on the common line of the aforesaid Lot 4-R and Lot 3-R-1, Block 1, Wedge Hills Subdivision, an addition to the city of Fort Worth, Texas, as shown on map recorded in Volume 388-120, Page 86, said deed records;

THENCE North 01° 34’ 06” West, 40.00 feet to a PK nail set in concrete at a chain link fence post for the common northerly corner of said lots and being on the westerly most south line of the aforesaid 35.312 acre tract;

THENCE South 89° 26’ 24” West, along a common line between said southerly line and the northerly line of said Lot 3-R-I, passing a 5/8-inch iron rod with TxDOT aluminum cap found for the northwesterly corner of said Lot 3-R-I at 185.42 feet and continuing for a total distance of 204.13 feet to the westerly most southwest corner of said 35.312 acre tract and being in McCart Street (A variable width ROW, no deed of record found);

THENCE North 00° 32’ 13” West, along the westerly line of said 35.312 acre tract, 1330.50 feet to a point in McCart Street;

SAMPLE DRAFT

THENCE North 89° 27’ 58” East, 21.15 feet to a 5/8-inch iron rod with cap stamped “SURVCON” set on the aforesaid southerly ROW line of Interstate 20;

THENCE along said southerly line the following six (6) courses;

1) NORTH 08° 13’ 45” East, 272.93 feet to a 5/8-inch smooth iron rod found;

2) NORTH 56° 00’ 45” East, 67.19 feet to a 5/8-inch smooth iron rod found;

3) SOUTH 76° 40’ 15” East, 544.58 feet to a 5/8-inch smooth iron rod found;

4) SOUTH 74° 58’ 15” East, 83.02 feet to a 5/8-inch smooth iron rod found;

5) SOUTH 71° 53’ 15” East, 93.23 feet to a 5/8-inch smooth iron rod found;

6) SOUTH 69° 33’ 52” East, 157.00 feet to the POINT OF BEGINNING and containing 40.6475 acres of land which 0.6333 acres are situated in the apparent right-of- way of McCart Street and Edgecliff Road leaving a net computed area of 40.0142 acres of land.

SAMPLE DRAFT

Exhibit C
Glen Rose Maintenance Facility

The Texas Department of Transportation is the owner of certain property without improvements located on SH 144, Somervell County, more particularly described by metes and bounds as follows:

Being 15.714 acres of land, more or less, situated in the counties of Hood and Somervell, State of Texas, and being out of the Galveston County School Land Survey, Abstract No. 36 and being a part of a tract of land conveyed by Alberta H. Lunger and Harold L. Lunger to Brite Divinity School by deed dated May 24, 1990 and recorded in Volume 10, Page 820 of the Real Records, Somervell County, Texas, which 15.714 acres of land, more or less, more particularly described as follows:

BEGINNING at a found 5/8-inch iron pin with an aluminum cap marked 1807 in the existing west right of way (ROW) line of SH 144 said point being South 31°02'00" East, a distance of 833.95 feet from a found ½ inch iron pin with a red cap marked Clark Survey at the northeast corner of said school tract; said point also being 50.00 feet west of and at right angle to centerline survey station 500+79.21 of said highway;

THENCE South 58°58'02" West, along the north line of a tract of land described in Volume 37, Page 607, said Real Records a distance of 1,581.87 feet to a found 5/8-inch iron pin with an aluminum cap marked 1807;

THENCE North 28°50'08" West, along the east line of a tract of land described in Volume 63, page 297, Deed Records, Somervell County, same being the southwest line of said school tract, and generally along a fence line, a distance of 435.32 feet to a set 5/8-inch iron pin with an aluminum cap marked Texas Department of Transportation;

THENCE North 58°58'02" East, along the North line of the herein described tract a distance of 1,565.18 feet to a set row marker in the existing west ROW of SH 144; from which a found concrete monument with a brass cap marked
R.P.S. No. 314 in Hood, Somervell County line bears South 31°26'43" east, a distance of 98.36 feet;

THENCE South 31°02'00" East, along said existing west ROW line, a distance of 435.00 feet to the POINT OF BEGINNING.

Directional control was based on the existing west ROW line SH 144.

SAMPLE DRAFT

Exhibit D
Mineral Wells Maintenance Facility

The Texas Department of Transportation is the owner of certain property with improvements located
2400 US 180, Mineral Wells, Palo Pinto County, more particularly described by metes and bounds as follows:

Being a parcel or tract of land out of a 36.667 acre tract, more or less, in the northeast ¼ of Section 46, Block "A", east of the Brazos River, T.& P.R.R. Company Survey, Abstract 1577 in Palo Pinto County, conveyed to George Lee Martin, Jr., by Dallas A. Treadway and wife Donna Mae Treadway by deed dated June 28, 1957, which deed is of record in Volume 265, Page 312, of the Deed Records of Palo Pinto County, Texas.

BEGINNING at a point in the West boundary line of the said 36.667 acre tract South 1°36'00" West, along the said West boundary line a distance of 2,610 feet, more or less, form the northwest corner of the same. Said point being in the common east boundary line of the L.O. Waters tract and is in the proposed North right of way (ROW) line of US 180, 50 feet opposite proposed centerline station 1816+88.00. Said point is the southwest corner of the tract herein conveyed;

THENCE North 01° 36'00" West, along and with aforesaid Waters-Martin common boundary line, a distance of 819.01 feet to the northwest corner of the tract herein conveyed;

THENCE North 79° 03'00" East, a distance of 292.70 feet to the most northerly corner of the tract herein conveyed;

THENCE South 34°08'00" East, a distance of 230.98 feet to a point being a northeast corner;

THENCE South 03°57'00" East, along the east line of the tract herein conveyed, a distance of 673.85 feet to a point in the proposed north ROW line of US 180.

THENCE South 88°36'00" West, along the proposed north ROW line of US 180, a distance of 440.59 feet to the POINT OF BEGINNING and containing 8.00 acres of land, more or less.

SAMPLE DRAFT

EXHIBIT E
Approved Construction Documents

This page left blank intentionally

SAMPLE DRAFT

EXHIBIT F
Schedule of Values

This page left out intentionally

SAMPLE DRAFT

EXHIBIT G
Prevailing Wage Schedule

TARRANT COUNTY PREVAILING WAGE SCHEDULE

GENERAL DECISION: TX20080059 04/10/2009 TX59
Date: April 10, 2009
General Decision Number: TX20080059 04/10/2009
Superseded General Decision Number: TX20070061
State: Texas
Construction Type: Building
Counties: Johnson, Parker and Tarrant Counties in Texas.

BUILDING CONSTRUCTION PROJECTS (does not include single family homes and apartments up to and including 4 stories). Use current heavy and highway General Wage Determination for Paving Incidental to Building Construction in Tarrant County and for Paving and Utilities incidental to Building Construction in remaining Counties.)

Modification Number	Publication Date
0	02/08/2008
1	03/28/2008
2	04/11/2008
3	06/06/2008
4	07/25/2008
5	12/05/2008
6	01/23/2009
7	04/10/2009

BRTX0001-007 06/01/2006

	Rates	Fringes
BRICKLAYER	$ 19.00	6.48

CARP1421-001 05/01/1995

	Rates	Fringes
MILLWRIGHT	$ 16.49	3.92

ELEC0020-004 12/01/2008

	Rates	Fringes
Electricians:		
Cable Splicer	$ 25.36	4.50+12.5%
Electrician	$ 23.20	4.50+12.5%

IRON0263-001 06/01/2007

	Rates	Fringes
IRONWORKER (Structural)	$ 20.10	4.60

*SFTX0669-001 04/01/2009

	Rates	Fringes
SPRINKLER FITTER (Fire Sprinklers)	$ 25.90	14.30

SUTX1989-001 11/01/1989

	Rates	Fringes
Acoustical Installer	$ 11.23	
CARPENTER		
(Excluding drywall hangers, acoustical		

```
     installers & batt
     insulators).................$ 12.27            2.22
     doing drywall hanging only..$ 10.00

CEMENT MASON/CONCRETE FINISHER...$ 10.16             .76
DRYWALL FINISHER/TAPER..........$ 11.18            2.21
GLAZIER.........................$ 11.37            1.31
LABORER (Including Mason
Tenders & Pipelayers)...........$  7.46            1.00
Landscape Laborer...............$  6.55
Mechanical Insulator............$ 10.92            1.00
PAINTER (Brush and Spray)
(excluding Drywall Finishing)....$ 10.47           2.21
PLASTERER.......................$ 11.50
Plumbers and Pipefitters
(Including HVAC work)...........$ 13.34            2.15
Power equipment operators:
     Backhoes...................$ 12.30            1.82
     Cranes.....................$ 14.26            2.44
     Foundation Drill Operators..$  8.54
     Graders....................$ 11.69            1.80
ROOFER, Including Built Up,
Composition and Single Ply
Roofs...........................$  9.50             .99
Sheet metal worker (Including
HVAC Duct Work).................$ 12.63            2.10
  WELDERS -  Receive rate prescribed for craft performing
  operation to which welding is incidental.
--------------------------------------------------------------------------------
WELDERS - Receive rate prescribed for craft performing operation to which welding is
incidental.
================================================================================
Unlisted classifications needed for work not included within the scope of the
classifications listed may be added after award only as provided in the labor standards
contract clauses (29CFR 5.5 (a) (1) (ii)).
--------------------------------------------------------------------------------
In the listing above, the "SU" designation means that rates listed under the identifier
do not reflect collectively bargained wage and fringe benefit rates.  Other designations
indicate unions whose rates have been determined to be prevailing.
--------------------------------------------------------------------------------
            WAGE DETERMINATION APPEALS PROCESS
1.) Has there been an initial decision in the matter? This can be:
*  an existing published wage determination
*  a survey underlying a wage determination
*  a Wage and Hour Division letter setting forth a position on
   a wage determination matter
*  a conformance (additional classification and rate) ruling

On survey related matters, initial contact, including requests for summaries of surveys,
should be with the Wage and Hour Regional Office for the area in which the survey was
conducted because those Regional Offices have responsibility for the Davis-Bacon survey
program. If the response from this initial contact is not satisfactory, then the rocess
described in 2.) and 3.) should be followed.

With regard to any other matter not yet ripe for the formal process described here,
initial contact should be with the Branch of Construction Wage Determinations.  Write to:

        Branch of Construction Wage Determinations
        Wage and Hour Division
```

U.S. Department of Labor
200 Constitution Avenue, N.W.
Washington, DC 20210

2.) If the answer to the question in 1.) is yes, then an interested party (those affected by the action) can request review and reconsideration from the Wage and Hour Administrator (See 29 CFR Part 1.8 and 29 CFR Part 7). Write to:

Wage and Hour Administrator
U.S. Department of Labor
200 Constitution Avenue, N.W.
Washington, DC 20210

The request should be accompanied by a full statement of the interested party's position and by any information (wage payment data, project description, area practice material, etc.) that the requestor considers relevant to the issue.

3.) If the decision of the Administrator is not favorable, an interested party may appeal directly to the Administrative Review Board (formerly the Wage Appeals Board). Write to:

Administrative Review Board
U.S. Department of Labor
200 Constitution Avenue, N.W.
Washington, DC 20210

4.) All decisions by the Administrative Review Board are final.

PALO PINTO COUNTY PREVAILING WAGE SCHEDULE

GENERAL DECISION: TX20080284 06/19/2009 TX284
Date: June 19, 2009 General Decision Number: TX20080284 06/19/2009
State: Texas
Construction Type: Building
Counties: Palo Pinto and Panola Counties in Texas.
BUILDING CONSTRUCTION PROJECTS (does not include single family homes or apartments up to and including 4 stories).

Modification Number Publication Date
0 06/19/2009

ASBE0021-004 04/30/2008

	Rates	Fringes
Heat and Frost Insulator/Asbestos Worker	$ 17.24	6.68

BOIL0074-004 07/01/2008
Palo Pinto

	Rates	Fringes
Boilermaker	$ 24.12	14.46

BOIL0587-004 08/08/2008
Panola County

	Rates	Fringes
Boilermaker	$ 22.77	13.27

IRON0263-017 06/01/2008

	Rates	Fringes
Ironworker, reinforcing	$ 20.90	4.60

LABO0154-022 05/01/2008

	Rates	Fringes
Laborers: (Mason Tender - Cement/Concrete)	$ 14.25	2.90

SUTX2009-105 04/20/2009

	Rates	Fringes
BRICKLAYER	$ 20.00	0.00
CARPENTER, Including Acoustical Ceiling Installation and Floor Layer: Hardwood Floors	$ 14.30	0.00
CEMENT MASON/CONCRETE FINISHER	$ 13.29	0.00
ELECTRICIAN	$ 18.06	4.87
IRONWORKER, STRUCTURAL	$ 15.48	0.00
LABORER: Common or General	$ 9.73	0.00
LABORER: Landscape and Irrigation	$ 8.50	0.22
LABORER: Mason Tender - Brick	$ 12.02	0.00
LABORER: Mortar Mixer	$ 12.00	0.00
OPERATOR: Backhoe/Excavator/Trackhoe	$ 11.00	0.00
OPERATOR: Bulldozer	$ 13.00	0.31

OPERATOR: Crane.....$ 21.33 0.00
OPERATOR: Forklift.....$ 14.58 0.00
OPERATOR: Front End Loader.....$ 10.54 0.00
PAINTER: Brush, Roller, and
Spray.....$ 13.50 0.00
PLUMBER.....$ 20.38 4.74
ROOFER.....$ 13.64 1.80
SHEETMETAL WORKER.....$ 17.00 0.00
TILE SETTER.....$ 15.00 0.00
TRUCK DRIVER.....$ 12.52 0.00

WELDERS - Receive rate prescribed for craft performing operation to which welding is incidental.

==========

Unlisted classifications needed for work not included within the scope of the classifications listed may be added after award only as provided in the labor standards contract clauses (29 CFR 5.5(a)(1)(ii)).

In the listing above, the "SU" designation means that rates listed under the identifier do not reflect collectively bargained wage and fringe benefit rates. Other designations indicate unions whose rates have been determined to be prevailing.

WAGE DETERMINATION APPEALS PROCESS

1.) Has there been an initial decision in the matter? This can be:

* an existing published wage determination
* a survey underlying a wage determination
* a Wage and Hour Division letter setting forth a position on a wage determination matter
* a conformance (additional classification and rate) ruling

On survey related matters, initial contact, including requests for summaries of surveys, should be with the Wage and Hour Regional Office for the area in which the survey was conducted because those Regional Offices have responsibility for the Davis-Bacon survey program. If the response from this initial contact is not satisfactory, then the process described in 2.) and 3.) should be followed.

With regard to any other matter not yet ripe for the formal process described here, initial contact should be with the Branch of Construction Wage Determinations. Write to:

Branch of Construction Wage Determinations
Wage and Hour Division
U.S. Department of Labor
200 Constitution Avenue, N.W.
Washington, DC 20210

2.) If the answer to the question in 1.) is yes, then an interested party (those affected by the action) can request review and reconsideration from the Wage and Hour Administrator (See 29 CFR Part 1.8 and 29 CFR Part 7). Write to:

Wage and Hour Administrator
U.S. Department of Labor
200 Constitution Avenue, N.W.
Washington, DC 20210

The request should be accompanied by a full statement of the interested party's position and by any information (wage payment data, project description, area practice material, etc.) that the requestor considers relevant to the issue.

3.) If the decision of the Administrator is not favorable, an interested party may appeal directly to the Administrative Review Board (formerly the Wage Appeals Board). Write to:

Administrative Review Board
U.S. Department of Labor
200 Constitution Avenue, N.W.
Washington, DC 20210

4.) All decisions by the Administrative Review Board are final.

SOMERVELL COUNTY PREVAILING WAGE SCHEDULE

GENERAL DECISION: TX20080272 06/19/2009 TX272
Date: June 19, 2009
General Decision Number: TX20080272 06/19/2009
State: Texas
Construction Type: Building
Counties: Henderson, Hill and Somervell Counties in Texas.
BUILDING CONSTRUCTION PROJECTS (does not include single family homes or apartments up to and including 4 stories).

Modification Number	Publication Date
0	06/19/2009

ASBE0021-004 04/30/2008

	Rates	Fringes
Heat and Frost Insulator/Asbestos Worker	$ 17.24	6.68

BOIL0074-008 07/01/2008
Hill and Somervell Counties

	Rates	Fringes
Boilermaker	$ 24.12	14.46

BOIL0587-006 08/08/2008
Henderson County

	Rates	Fringes
Boilermaker	$ 22.77	13.27

IRON0263-018 06/01/2008
Henderson and Somervell Counties

	Rates	Fringes
Ironworker, reinforcing	$ 20.90	4.60

IRON0482-005 06/01/2008
Hill County

	Rates	Fringes
IRONWORKER, REINFORCING	$ 18.95	4.90

LABO0154-022 05/01/2008

	Rates	Fringes
Laborers: (Mason Tender - Cement/Concrete)	$ 14.25	2.90

---SUTX2009-093 04/20/2009

	Rates	Fringes
BRICKLAYER	$ 20.00	0.00
CARPENTER, Including Acoustical Ceiling Installation and Floor Layer: Hardwood Floors	$ 14.30	0.00
CEMENT MASON/CONCRETE FINISHER	$ 13.29	0.00
ELECTRICIAN	$ 18.06	4.87
IRONWORKER, STRUCTURAL	$ 15.48	0.00
LABORER: Common or General	$ 9.73	0.00
LABORER: Landscape and Irrigation	$ 8.50	0.22

LABORER: Mason Tender - Brick...$ 12.02 0.00
LABORER: Mortar Mixer.....$ 12.00 0.00
OPERATOR:
Backhoe/Excavator/Trackhoe.....$ 11.00 0.00
OPERATOR: Bulldozer.....$ 13.00 0.31
OPERATOR: Crane.....$ 21.33 0.00
OPERATOR: Forklift.....$ 14.58 0.00
OPERATOR: Front End Loader.....$ 10.54 0.00
PAINTER: Brush, Roller and
Spray.....$ 13.50 0.00
PLUMBER.....$ 20.38 4.74
ROOFER.....$ 13.64 1.80
SHEETMETAL WORKER.....$ 17.00 0.00
TILE SETTER.....$ 15.00 0.00
TRUCK DRIVER.....$ 12.52 0.00

WELDERS - Receive rate prescribed for craft performing operation to which welding is incidental.

==========

Unlisted classifications needed for work not included within the scope of the classifications listed may be added after award only as provided in the labor standards contract clauses (29 CFR 5.5(a)(1)(ii)).

In the listing above, the "SU" designation means that rates listed under the identifier do not reflect collectively bargained wage and
fringe benefit rates. Other designations indicate unions whose rates have been determined to be prevailing.

WAGE DETERMINATION APPEALS PROCESS

1.) Has there been an initial decision in the matter? This can be:

* an existing published wage determination
* a survey underlying a wage determination
* a Wage and Hour Division letter setting forth a position on a wage determination matter
* a conformance (additional classification and rate) ruling

On survey related matters, initial contact, including requests for summaries of surveys, should be with the Wage and Hour Regional Office
for the area in which the survey was conducted because those Regional Offices have responsibility for the Davis-Bacon survey program. If the
response from this initial contact is not satisfactory, then the process described in 2.) and 3.) should be followed.

With regard to any other matter not yet ripe for the formal process described here, initial contact should be with the Branch of Construction Wage Determinations. Write to:

Branch of Construction Wage Determinations
Wage and Hour Division
U.S. Department of Labor
200 Constitution Avenue, N.W.
Washington, DC 20210

2.) If the answer to the question in 1.) is yes, then an interested party(those affected by the action) can request review and reconsideration from the Wage and Hour Administrator (See 29 CFR Part 1.8 and 29 CFR Part 7). Write to:

Wage and Hour Administrator
U.S. Department of Labor

200 Constitution Avenue, N.W.
Washington, DC 20210

The request should be accompanied by a full statement of the interested party's position and by any information (wage payment data, project description, area practice material, etc.) that the requestor considers relevant to the issue.

3.) If the decision of the Administrator is not favorable, an interested party may appeal directly to the Administrative Review Board (formerly the Wage Appeals Board). Write to:

Administrative Review Board
U.S. Department of Labor
200 Constitution Avenue, N.W.
Washington, DC 20210

4.) All decisions by the Administrative Review Board are final.

DALLAS COUNTY PREVAILING WAGE SCHEDULE

GENERAL DECISION: TX20080058 04/10/2009 TX58
Date: April 10, 2009 General Decision Number: TX20080058 04/10/2009
Superseded General Decision Number: TX20070060
State: Texas
Construction Type: Building
Counties: Dallas, Ellis, Kaufman and Rockwall Counties in Texas.

BUILDING CONSTRUCTION PROJECTS (does not include single family homes and apartments up to and including 4 stories). Use current HIGHWAY GENERAL WAGE DETERMINATION FOR PAVING AND UTILITIES INCIDENTAL TO BUILDING CONSTRUCTION)

Modification Number	Publication Date
0	02/08/2008
1	03/28/2008
2	04/11/2008
3	06/06/2008
4	12/05/2008
5	01/23/2009
6	04/10/2009

BRTX0001-006 06/01/2006

	Rates	Fringes
BRICKLAYER	$ 19.00	6.48

CARP0429-001 05/01/2000

	Rates	Fringes
CARPENTER	$ 15.95	2.92

ELEC0020-003 12/01/2008

	Rates	Fringes
Electricians:		
Cable Splicer	$ 25.36	4.50+12.5%
Electrician	$ 23.20	4.50+12.5%

ENGI0178-003 06/01/2008

	Rates	Fringes
Cranes:		
Hydraulic Crane (35 ton & under)	$ 22.70	8.60
Hydraulic over 35 tons,Derricks, Overhead Gentry,Stiffleg,Tower, etc., and Cranes with Piledriving or Caisson attachements	$ 23.70	8.60

IRON0263-002 06/01/2007

	Rates	Fringes
Ironworkers:		
Structural	$ 20.10	4.60

PLAS0061-001 05/01/1993

	Rates	Fringes
PLASTERER	$ 15.06	2.94

---

* SFTX0669-001 04/01/2009

	Rates	Fringes

SPRINKLER FITTER (Fire
Sprinklers).....$ 25.90 14.30

SUTX1989-005 11/01/1989

	Rates	Fringes
Acoustical Installer	$ 12.16	
Brick Tender	$ 8.60	1.30
CEMENT MASON/CONCRETE FINISHER	$ 11.38	
DRYWALL HANGER	$ 11.71	
FLOOR LAYER: CARPET (SOFT) FLOOR	$ 13.13	
GLAZIER	$ 12.26	1.10
IRONWORKER, REINFORCING	$ 10.33	2.94
Laborer, Unskilled (Excluding Landscape Laborers)	$ 7.58	1.30
LATHER	$ 17.38	1.04
Mechanical Insulator	$ 10.55	1.00
Painters:		
Brush & Spray	$ 10.76	2.20
Painters doing drywall finishing only	$ 10.42	
PAPERHANGER	$ 11.30	2.20
Plasterer tender	$ 9.00	
Plumbers and Pipefitters (Including HVAC Work)	$ 12.80	1.63
Power equipment operators:		
Backhoes	$ 10.64	1.41
Front End Loaders	$ 8.77	
ROOFER, Including Built Up, Composition and Single Ply Roofs	$ 9.45	1.04
Sheet metal worker (Including HVAC Work)	$ 12.80	2.05
TILE SETTER	$ 13.75	

WELDERS - Receive rate prescribed for craft performing operation to which welding is incidental.

==========

Unlisted classifications needed for work not included within the scope of the classifications listed may be added after award only as provided in the labor standards contract clauses (29CFR 5.5 (a) (1) (ii)).

In the listing above, the "SU" designation means that rates listed under the identifier do not reflect collectively bargained wage and fringe benefit rates. Other designations indicate unions whose rates have been determined to be prevailing.

WAGE DETERMINATION APPEALS PROCESS

1.) Has there been an initial decision in the matter? This can be:

* an existing published wage determination
* a survey underlying a wage determination
* a Wage and Hour Division letter setting forth a position on a wage determination matter
* a conformance (additional classification and rate) ruling

On survey related matters, initial contact, including requests for summaries of surveys, should be with the Wage and Hour Regional Office for the area in which the survey was conducted because those Regional Offices have responsibility for the Davis-Bacon survey program. If the response from this initial contact is not satisfactory, then the process described in 2.)

and 3.) should be followed.

With regard to any other matter not yet ripe for the formal process described here, initial contact should be with the Branch of Construction Wage Determinations. Write to:

Branch of Construction Wage Determinations
Wage and Hour Division
U.S. Department of Labor
200 Constitution Avenue, N.W.
Washington, DC 20210

2.) If the answer to the question in 1.) is yes, then an interested party (those affected by the action) can request review and reconsideration from the Wage and Hour Administrator (See 29 CFR Part 1.8 and 29 CFR Part 7). Write to:

Wage and Hour Administrator
U.S. Department of Labor
200 Constitution Avenue, N.W.
Washington, DC 20210

The request should be accompanied by a full statement of the interested party's position and by any information (wage payment data, project description, area practice material, etc.) that the requestor considers relevant to the issue.

3.) If the decision of the Administrator is not favorable, an interested party may appeal directly to the Administrative Review Board (formerly the Wage Appeals Board). Write to:

Administrative Review Board
U.S. Department of Labor
200 Constitution Avenue, N.W.
Washington, DC 20210

4.) All decisions by the Administrative Review Board are final.

EXHIBIT H
Project Schedule

This page left out intentionally

EXHIBIT I
HUB Subcontracting Plan Report

This page left out intentionally

Appendix B

Standard DOT Title VI Assurances

Standard DOT Title VI Assurances

DOT 1050.2

Dated 8/24/71

The (Title of Recipient) (hereinafter referred to as the "Recipient") HEREBY AGREES THAT as a condition to receiving any Federal financial assistance from the Department of Transportation it will comply with Title VI of the Civil Rights Act of 1964, 78 Stat. 252, 42 U.S.C. 2000d-42 D.S.C. 2000d-4 (hereinafter referred to as the Act), and all requirements imposed by or pursuant to Title 49, Code of Federal Regulations, Department of Transportation, Subtitle A, Office of the Secretary, Part 21, Nondiscrimination in Federally-Assisted Programs of the Department of Transportation—Effectuation of Title VI of the Civil Rights Act of 1964 (hereinafter referred to as the Regulations) and other pertinent directives, to the end that in accordance with the Act, Regulations, and other pertinent directives, no person in the United States shall, on the grounds of race, color, or national origin, be excluded from participation in, be denied the benefits of, or be otherwise subjected to discrimination under any program or activity for which the Recipient receives Federal financial assistance from the Department of Transportation, including the *(Name of Appropriate Administration),* and HEREBY GIVES ASSURANCE THAT it will promptly take any measures necessary to effectuate this agreement. This assurance is required by subsection 21.7(a)(1) of the Regulations, a copy of which is attached.

More specifically and without limiting the above general assurance, the Recipient hereby gives the following specific assurances with respect to its *(Name of Appropriate Program)*:

1. That the Recipient agrees that each "program" and each "facility" as defined in subsections 21.23(e) and 21.23(b) of the Regulations, will be (with regard to a "program") conducted, or will be (with regard to a "facility") operated in compliance with all requirements imposed by, or pursuant to, the Regulations.

2. That the Recipient shall insert the following notification in all solicitations for bids for work or material subject to the Regulations and made in connection with all *(Name of Appropriate Program)* and, in adapted form in all proposals for negotiated agreements:

The (Recipient), in accordance with Title VI of the Civil Rights Act of 1964, 78 Stat. 252, 42 U.S.C 2000d to 2000d-4 and Title 49, Code of Federal Regulations, Department of Transportation, Subtitle A, Office the Secretary, Part 21, Nondiscrimination in Federally-assisted programs of the Department of Transportation issued pursuant to such Act, hereby notifies all bidders that it will affirmatively insure that in any contact entered into pursuant to this advertisement, minority business enterprises will be afforded full opportunity to submit bids in response to this invitation and will not be discriminated against on the grounds of race, color, or national origin in consideration for an award.

3. That the Recipient shall insert the-clauses of Appendix A of this assurance in every contract subject to the Act and the Regulations.

4. That the Recipient shall insert the clauses of Appendix B of this assurance, as a covenant running with the land, in any deed from the United States effecting a transfer of real property, structures, or improvements thereon, or interest therein.

5. That where the Recipient receives Federal financial assistance to construct a facility, or part of a facility, the assurance shall extend to the entire facility and facilities operated in connection therewith.

6. That where the Recipient receives Federal financial assistance in the form, or for the acquisition of real property or an interest in real property, the assurance shall extend to rights to space on, over or under such property.

7. That the Recipient shall include the appropriate clauses set forth in Appendix C of this assurance, as a covenant running with the land, in any future deeds, leases, permits, licenses, and similar agreements entered into by the Recipient with other parties: (a) for the subsequent transfer of real property acquired or improved under *(Name of Appropriate Program);* and (b) for the construction or use of or access to space on, over or under real property acquired, or improved under *(Name of Appropriate Program).*

8. That this assurance obligates the Recipient for the period during which Federal financial assistance is extended to the program, except where the Federal financial assistance is to provide, or is in the form of, personal property, or real property or interest therein or structures or improvements thereon, in which case the assurance obligates the Recipient or any transferee for the longer of the following periods: (a) the period during which the property is used for a purpose for which the Federal financial assistance is extended, or for another purpose involving the provision of similar services or benefits; or (b) the period during which the Recipient retains ownership or possession of the property.

9. The Recipient shall provide for such methods of administration for the program as are found by the Secretary of Transportation or the official to whom he delegates specific authority to give reasonable guarantee that it, other recipients, subgrantees, contractors, subcontractors, transferees, successors in interest, and other participants of Federal financial assistance under such program will comply with all requirements imposed or pursuant to the Act, the Regulations and this assurance.

10. The Recipient agrees that the United States has a right to seek judicial enforcement with regard to any matter arising under the Act, the Regulations, and this assurance.

THIS ASSURANCE is given in consideration of and for the purpose of obtaining any and all Federal grants, loans, contracts, property, discounts or other Federal financial assistance extended after the date hereof to the Recipient Department of Transportation under the *(Name of Appropriate Program)* and is binding on it, other recipients, subgrantees, contractors, subcontractors, transferees, successors in interest and other participants in the *(Name of Appropriate Program).* The person or persons whose signatures appear below are authorized to sign this assurance on behalf of the Recipient.

Dated _____

_____
(Recipient)

by _____
(Signature of Authorized Official)

APPENDIX A

During the performance of this contract, the contractor, for itself, its assignees and successors in interest (hereinafter referred to as the "contractor") agrees as follows:

(1) **Compliance with Regulations**: The contractor shall comply with the Regulations relative to nondiscrimination in Federally-assisted programs of the Department of Transportation (hereinafter, "DOT") Title 49, Code of Federal Regulations, Part 21, as they may be amended from time to time, (hereinafter referred to as the Regulations), which are herein incorporated by reference and made a part of this contract.

(2) **Nondiscrimination**: The Contractor, with regard to the work performed by it during the contract, shall not discriminate on the grounds of race, color, or national origin in the selection and retention of subcontractors, including procurements of materials and leases of equipment. The contractor shall not participate either directly or indirectly in the discrimination prohibited by section 215 of the Regulations, including employment practices when the contract covers a program set forth in Appendix B of the Regulations.

(3) **Solicitations for Subcontractors, Including Procurements of Materials and Equipment**: In all solicitations either by competitive bidding or negotiation made by the contractor for work to be performed under a subcontract, including procurements of materials or leases of equipment, each potential subcontractor or supplier shall be notified by the contractor of the contractor's obligations under this contract and the Regulations relative to nondiscrimination on the grounds of race, color, or national origin.

(4) **Information and Reports**: The contractor shall provide all information and reports required by the Regulations or directives issued pursuant thereto, and shall permit access to its books, records, accounts, other sources of information, and its facilities as may be determined by the *(Recipient)* or the *(Name of Appropriate Administration)* to be pertinent to ascertain compliance with such Regulations, orders and instructions. Where any information required of a contractor is in the exclusive possession of another who fails or refuses to furnish this information the contractor shall so certify to the *(Recipient),* or the *(Name of Appropriate Administration)* as appropriate, and shall set forth what efforts it has made to obtain the information.

(5) **Sanctions for Noncompliance**: In the event of the contractor's noncompliance with the nondiscrimination provisions of this contract, the *(Recipient)* shall impose such contract sanctions as it or the *(Name of Appropriate Administration)* may determine to be appropriate, including, but not limited to:

(a) withholding of payments to the contractor under the contract until the contractor complies, and/or

(b) cancellation, termination or suspension of the contract, in whole or in part.

(6) **Incorporation of Provisions**: The contractor shall include the provisions of paragraphs (1) through (6) in every subcontract, including procurements of materials and leases of equipment, unless exempt by the Regulations, or directives issued pursuant thereto.

The contractor shall take such action with respect to any subcontract or procurement as the *(Recipient)* or the *(Name of Appropriate Administration)* may direct as a means of enforcing such provisions including sanctions for non-compliance. Provided, however, that, in the event a contractor becomes involved in, or is threatened with, litigation with a subcontractor or supplier as a result of such direction, the contractor may request the *(Recipient)* to enter into such litigation to protect the interests of the *(Recipient),* and, in addition, the contractor may request the United States to enter into such litigation to protect the interests of the United States.

APPENDIX B

A. The following clauses shall be included in any and all deeds effecting or recording the transfer of real property, structures or improvements thereon, or interest therein from the United States.

(GRANTING CLAUSE)

NOW, THEREFORE, the Department of Transportation, as authorized by law, and upon the condition that the *(Name of Recipient)* will accept title to the lands and maintain the project constructed thereon, in accordance with *(Name of Appropriate Legislative Authority),* the Regulations for the Administration of *(Name of Appropriate Program)* and the policies and procedures prescribed by *(Name of Appropriate Administration)* of the Department of Transportation and, also in accordance with and in compliance with all requirements imposed by or pursuant to Title 49, Code of Federal Regulations, Department of Transportation, Subtitle A, Office of the Secretary, Part 21, Nondiscrimination in Federally-assisted programs of the Department of Transportation (hereinafter referred to as the Regulations) pertaining to and effectuating the provisions of Title VI of the Civil Rights Act of 1964 (78 Stat. 252; 42 U.S.C. 2000d to 2000d-4), does hereby remise, release, quitclaim and convey unto the *(Name of Recipient)* all the right, title and interest of the Department of Transportation in and to said lands described in Exhibit "A" attached hereto and made a part hereof.

(HABENDUM CLAUSE)

TO HAVE AND TO HOLD said lands and interests therein unto *(Name of Recipient)* and its successors forever, subject, however, to the convenants, conditions, restrictions and reservations herein contained as follows, which will remain in effect for the period during which the real property or structures are used for a purpose for which Federal financial assistance is extended or foranother purpose involving the provision of similar services or benefits and shall be binding on the *(Name of Recipient),* its successors and assigns.

The *(Name of Recipient),* in consideration or the conveyance of said lands and interests in lands, does hereby convenant and agree as a convenant running with the land for itself, its successors and assigns, that (1) no person shall on the grounds of race, color, or national origin, be excluded from participation in, be denied the benefits of, or be otherwise subjected to discrimination with regard to any facility located wholly or in part on over or under such lands hereby conveyed [,] [land]* (2) that the *(Name of Recipient)* shall use the lands and interests in lands and interests in lands so conveyed, in compliance with all requirements imposed by or pursuant to Title 49, Code of Federal Regulations, Department of Transportation, Subtitle A, office of the Secretary, Part 21, Nondiscrimination in Federally-assisted programs of the Department of Transportation—Effectuation of Title VI of the Civil Rights Act of 1964, and as said Regulations may be amended [,] and (3) that in the event of breach of any of the above-mentioned nondiscrimination conditions, the Department shall have a right to re-enter said lands and facilities on said land, and the above described land and facilities shall thereon revert to and vest in and become the absolute property of the Department of Transportation and its assigns as such interest existed prior to this instruction.

APPENDIX C

The following clauses shall be included in all deeds, licenses, leases, permits, or similar instruments entered into by the *(Name of Recipient)* pursuant to the provisions of Assurance 6(a).

The (grantee, licensee, lessee, permitee, etc., as appropriate) for himself, his heirs, personal representatives, successors in interest, and assigns, as a part of the consideration hereof, does hereby covenant and agree [in the case of deeds and leases add “as a covenant running with the land”] that in the event facilities are constructed, maintained, or otherwise operated on the said property described in this (deed, license, lease, permit, etc.) for a purpose for which a department of Transportation program or activity is extended or for another purpose involving the provision of similar services or benefits, the (grantee_ licensee, lessee, permitee, etc.) shall maintain and operate such facilities and services in compliance with all other requirements imposed pursuant to Title 49, Code of federal Regulations, Department of Transportation, Subtitle A, Office of the Secretary, Part 21, Nondiscrimination in Federally-assisted programs of

Appendix B

the Department of Transportation—Effectuation of Title VI of the Civil Rights Act of 1964, and as said Regulations may be amended.

[Include in licenses; leases, permits, etc.]*

That in the event of breach of any of the above nondiscrimination covenants, *(Name of Recipient)* shall have the right to terminate the [license, lease, permit, etc.] and to re-enter and repossess said land and the facilities thereon, and hold the same as if said [licenses, lease, permit, etc.] had never been made or issued.

[Include in deed.}*

That in the event of breach of any of the above non-discrimination covenants, *(Name of Recipient)* shall have the right to re-enter said lands and facilities thereon, and the above described lands and facilities shall thereupon revert to and vest in and become the absolute property of *(Name of Recipient)* and its assigns.

The following shall be included in all deeds, licenses, leases, permits, or similar agreements entered into by *(Name of Recipient)* pursuant to the provisions of Assurance 6(b).

The (grantee, licensee, lessee, permitee, etc., as appropriate) for himself, his personal representatives, successors in interest, and assigns, as a part of the consideration hereof, does hereby covenant and agree (in the case of deeds, and leases add "as a covenant running with the land") that (1) no person on the ground of race, color, or national origin shall be excluded from participation in, denied the benefits of, or be otherwise subjected to discrimination in the use of said facilities, (2) that in the construction of any improvements on, over or under such land and the furnishing of services thereon, no person on the ground of race, color, or national origin shall be excluded from participation in, denied the benefits of, or otherwise be subjected to discrimination, (3) that the (grantee, licensee, lessee, permitee, etc.) shall use the premises in compliance with all other requirements imposed by or pursuant to Title 49, Code of Federal Regulations, Department of Transportation, Subtitle A, Office of the Secretary, Part 21, Nondiscrimination in Federally-assisted programs of the Department of Transportation—Effectuation of Title VI of the Civil Rights Act of 1964), and as said. Regulations may be amended.

[Include in licenses, leases, permits, etc.]*

That in the event of breach of any of the above nondiscrimination covenants, *(Name of Recipient)* shall have the right to terminate the [license, lease, permit, etc.] and to re-enter and repossess said land and the facilities thereon, and hold the same as if said [license, lease, permit, etc.] had never been made or issued.

[Include in deeds]*

That in the event of breach of any of the above non-discrimination covenants, *(Name of Recipient)* shall have the right to re-enter said land and facilities thereon, and the above described lands and facilities shall thereupon revert to and vest in and become the absolute property of *(Name of Recipient)* and its assigns.

* Reverter clause and related language to be used only when it is determined that such a clause is necessary in order to effectuate the purposes of Title VI of the Civil Rights Act of 1964.

* Reverter clause and related language to be used only when it is determined that such a clause is necessary in order to effectuate the purposes of Title VI of the Civil Rights Act of 1964.

EXHIBIT K
Assignment and Assumption of Request for Proposals
(if applicable)

This page left blank intentionally

EXHIBIT L
Certificate of Substantial Completions

This page left out intentionally

EXHIBIT M
EXCHANGE AGREEMENTCONCERNING PROPERTY AND IMPROVEMENTS NO LONGER NEEDED BY THE TEXAS DEPARTMENT OF TRANSPORTATION IN RETURN FOR CONSTRUCTION OF NEW FACILITIES IN ARLINGTON AND FORT WORTH, TARRANT COUNTY, TEXAS

STATE OF TEXAS §
§
COUNTY OF §

THIS AGREEMENT is made by and between the State of Texas, acting by and through the Texas TxDOT of Transportation, hereinafter called "TxDOT", and , hereinafter called the "Developer" pursuant to the Development and Exchange Agreement (DEA) executed on <DATE>, 2010.

WHEREAS, TxDOT, in accordance with the Texas Transportation Code, 201.1055, may exchange land and improvements for construction of new facilities and appurtenant property;

WHEREAS, TxDOT, has determined the Fair Market Value TxDOT Property no longer needed for its intended purpose and located at I-30 and Collins Street, Arlington, Tarrant County, Texas has an appraised value of $12,003,000,000 and is more particularly described on **Exhibit A**, which exhibit is attached hereto and incorporated herein for all purposes, and TxDOT desires to exchange these properties and improvements thereon in return for construction of new facilities on state owned land described herein;

WHEREAS, pursuant to the DEA, the Developer desires to exchange for properties described in **Exhibits A** the construction, labor, materials and any value in excess of the appraised value of said properties, if any, for the following new facilities:

- a new area engineer, maintenance and laboratory building, and renovation of an existing building on department property located at 2501 Southwest Loop 820 in the city of Fort Worth, Tarrant County, Texas, more particularly described by metes and bounds in **Exhibit C**, attached hereto and incorporated herein for all purposes;

- new maintenance facility to be completed on department-owned property located at SH 144 in the city of Glen Rose, Somervell County, Texas, more particularly described by metes and bounds in **Exhibit D**, attached hereto and incorporated herein for all purposes;

- new maintenance facility to be completed on department-owned property located at 2400 US 180 West, in the city of Mineral Wells, Palo Pinto County, Texas, more particularly described by metes and bounds in **Exhibit E**, attached hereto and incorporated herein for all purposes;

WHEREAS, exchange of the TxDOT Property will further TxDOT's ability to meet its responsibilities; and

NOW, THEREFORE, in consideration of the agreements of the parties hereto and providing the DEA has been performed according to its terms by the parties, it is agreed as follows:

Article 1. Procedure for Exchange of Titles

The Developer shall execute a Warranty Deed, conveying the new facilities to TxDOT at the closing of the exchange transaction. Closing shall occur as soon as practical after TxDOT's acceptance of the Project in accord with the Development and Exchange Agreement and approval of the Commission.

TxDOT shall execute a Special Warranty Deed, conveying TxDOT Property to Developer at the closing of the exchange transaction. The value of the TxDOT Property was determined to be a combined total of $18,455,000, based on an appraisal, dated April 9, 2009, prepared by Tom Kyser, SRA, MAI, a certified appraiser, is $17,605,000, and $850,000, based on an appraisal dated May 13, 2009, prepared by Alan Pursley, MAI, SRPA, SRA, SGA, a certified appraisal, and is deemed by Developer and TxDOT to the fair market value of the properties described in **Exhibits A** including improvements thereon.

The fair market value of TxDOT Properties constitutes the total compensation for the new facilities constructed by Developer on properties described in **Exhibits C** through D.

Article 2. Representations and Warranties

The Developer has performed its due diligence regarding all aspects concerning the new facilities and represents and warrants the following:

- it owns in fee simple the Property that will be conveyed to TxDOT;
- there has been no current or former use, generation, storage or disposal of any hazardous material on or under the Properties currently or previously in violation of any federal, state or local governmental law or rule;
- there is no presence of asbestos material in the new facilities on the Properties;
- it has not received any notice of any action or proceeding relating to any hazardous materials or any release thereof on, in, under or about the Properties due to Developer's activities;
- there are no tax liens, material and mechanics liens, judgment liens or claims against the new facilities;
- there are no taxes owed on the new facilities;
- TxDOT is not responsible for any representations made by the Developer for tax purposes; and
- Developer agrees to abide by and perform according to the terms of the DEA.

TxDOT has performed its due diligence regarding all aspects concerning TxDOT Properties exchanged for the new facilities and represents and warrants the following:

- TxDOT owns in fee simple the Properties that will be conveyed to Developer;
- disclosure has been made to Developer of current or former use, generation, storage or disposal of any hazardous material on or under the TxDOT Properties currently or previously in violation of any federal, state or local governmental law or rule, if any;
- disclosure has been made to the Developer if the TxDOT Properties were ever used for a gas station, auto shop, or dry cleaning service;
- disclosure has been made to the Developer if there was any presence of asbestos material on the Properties;
- TxDOT has not received any notice of any action or proceeding relating to any hazardous materials or any release thereof on, in, under or about the Properties;
- there are no tax liens, material and mechanics liens, judgment liens or claims against the Properties;
- there are no taxes owed on the Properties;
- tax exempt status will no longer apply to the TxDOT property upon conveyance of title to Developer; and
- TxDOT agrees to abide by and perform according to the terms of the DEA.

Article 3. Incidental Expenses

At the closing, each party shall bear its own incidental expenses which may include (1) recording fees, transfer taxes and similar expenses incidental to conveying the respective properties, (2) title policies (3) prorated taxes and (4) recording costs.

This Exchange Agreement and constitutes the only promises, consideration and conditions regarding the conveyance, and no other promises, consideration or conditions have been signified or implied.

Article 4. Availability of Information

This agreement is public information and will be furnished to a requestor under the Public Information Act, Government Code, Chapter 552.

Signatory Warranty. The signatories hereto warrant that each has the authority to enter in to this **Exchange Agreement** on behalf of the party represented.

IN WITNESS WHEREOF, the parties have hereunto affixed their signatures effective as of the date first written above and bind themselves to the faithful performance of this **Exchange Agreement**.

<Developer Name>

Texas Department of Transportation
Executed and approved for the Texas Transportation Commission for the

By: _____
Signature

_____
Title

_____
Printed Name

purpose and effect of activating and/or carrying out the orders, and established policies or work programs heretofore approved and authorized by the Texas Transportation Commission.

By: _____
Executive Director
Texas Department of Transportation

_____
Printed Name

APPROVAL RECOMMENDED:

_____
Director of Maintenance Division

_____
Printed Name

_____
Date

EXHIBIT N
ABSOLUTE GUARANTY

ABSOLUTE GUARANTY OF DEVELOPMENT AND EXCHANGE AGREEMENT FOR CONSTRUCTION OF NEW FACILITIES IN ARLINGTON AND FORT WORTH, TARRANT COUNTY

This Absolute Guaranty is made and entered into as of the ____ day of _____, 2010 (the "Absolute Guaranty") by <name of developer> (the "Guarantor") for the benefit of the Texas Department of Transportation ("TxDOT").

W I T N E S S E T H:

WHEREAS, <name> is the Developer (Guarantor) under that certain Development Agreement and Exchange Agreement originally entered into by and between Developer and TxDOT dated <date> hereof (DEA), which DEA has been assigned effective as of the date hereof by Guarantor to <name> (Obligor/assignee), said assignment haven been approved by TxDOT; and

WHEREAS, pursuant to the terms and conditions more particularly set forth in the DEA, Obligor is responsible for the design and construction of the new facilities on TxDOT properties described in the DEA, reference to which document is made here in for all purposes and the terms of which are incorporated herein as if fully laid out; and

WHEREAS, TxDOT has requested certain assurances with regard to Obligor's ability to fulfill its obligations under the DEA; and

WHEREAS, Guarantor has contracted with Obligor and desires to provide assurances to TxDOT as to Obligor's ability to complete the design, construction and other obligations of Obligor, all as set forth in the DEA;

NOW, THEREFORE, in consideration of the premises, and as an inducement to TxDOT to enter into the DEA, Guarantor does hereby, subject to the terms hereof, covenant to and agree with TxDOT as follows:

ARTICLE I

COVENANTS AND AGREEMENTS

Section 1.1 Guarantor unconditionally guarantees to TxDOT for its benefit as follows:

(a) The prompt and complete observance, fulfillment and performance of all the conditions, covenants and other agreements of Obligor contained in the Development Agreement, including, but not limited to, the payment of any damages Obligor is required to pay to TxDOT under the DEA;

(b) That Obligor shall fully and punctually pay and discharge (i) any and all costs, expenses and liabilities for or incurred in connection with the design and construction of the Project contemplated by the Development Agreement as the same may come due and payable, and (ii) all claims and demands for labor, materials and services used or incurred in connection with the new facilities which are or may become due and payable or if unpaid, may become due and payable with respect to the new facilities, except any claims and demands related to Non-Developer Work (as defined in the DEA), for which neither Obligor nor Guarantor are responsible under the DEA or by law;

(c) The new facilities shall be and remain free and clear of all mechanics liens from any and all persons, firms, corporations or other entities furnishing materials, labor or services for or in connection with the design and construction of the Project, except those related to Non-Developer Work; and

(d) In the event the new facilities are not completed and paid for as aforesaid or the new facilities are not free of all such liens, claims and demands upon the completion thereof: (i) Guarantor shall fully indemnify, defend and save TxDOT harmless from all costs, liabilities, expenses or damages (whether or not arising out of valid claims) including but not limited to, reasonable attorney's fees and disbursements, which may arise by reason of Obligor's default beyond any applicable cure periods under the DEA; (ii) in the event that TxDOT shall (A) cause the construction or installation of the DEA to be performed; (B) pay any costs, expenses and liabilities in connection with the~~,~~ construction or installation of the DEA; or (C) cause any such lien, claim or demand to be released or paid, Guarantor shall reimburse TxDOT for all sums paid and all costs, expenses or liabilities incurred by TxDOT in connection therewith; or (iii) Guarantor shall, if requested by TxDOT, complete or cause the completion of the new facilities in accordance with the Accepted Plans and Specifications and any Change Orders which may be permitted pursuant to the provisions of the DEA. Nothing herein shall expand or modify or limit the obligations of Obligor and Guarantor set forth in the DEA.

Section 1.2 The obligation of Guarantor under this Absolute Guaranty shall be absolute and unconditional upon a default by Obligor under the DEA, which is not timely cured, and shall remain in full force and effect until Obligor has satisfied all of its obligations under the DEA.

Section 1.3 Guarantor agrees that it is liable for all claims arising under this Absolute Guaranty to the full extent of such claims, and that TxDOT may elect, in its sole discretion, to proceed against Guarantor without first proceeding against Obligor.

Section 1.4 It is expressly understood and agreed that this is a continuing Absolute Guaranty and that the obligations and liabilities of Guarantor under this Absolute Guaranty are and shall be primary, direct and immediate, shall not be conditional or contingent upon pursuit by TxDOT of any remedies it may have against Obligor under the DEA. Without limiting the generality of the foregoing, TxDOT shall not be required to make any demand on Obligor or otherwise pursue or exhaust its

remedies against Obligor, before, simultaneously with, or after enforcing its rights and remedies hereunder against Guarantor. Any one or more successive and/or concurrent actions may be brought hereon against Guarantor either in the same action, if any, brought against Obligor or in separate actions.

Section 1.5 No act of commission or omission of any kind with respect to any matter whatsoever shall in any way impair the rights of TxDOT to enforce any right, power or benefit under this Absolute Guaranty and no setoff, counterclaim, reduction or diminution of any obligation, or any defense of any kind or nature which Obligor has or may have against TxDOT in connection with any other transaction shall be available hereunder to Guarantor.

Section 1.6 Until the payment and performance in full of all obligations of Obligor contained in the DEA; (i) Guarantor shall not exercise any rights against Obligor arising as a result of any payment by Guarantor under this Absolute Guaranty, by way of subrogation or otherwise, and will not assert or prove any claim in competition with Obligor or its affiliates with respect to any payment hereunder in bankruptcy or insolvency proceedings of any nature; and (ii) Guarantor will not claim any set-off or counterclaim against Obligor with respect to any liability of Guarantor to Obligor.

Section 1.7 Guarantor waives any defense based upon or arising by reason of: (a) any disability or other defense of Obligor or any other person; (b) the cessation of liability or limitation from any cause whatsoever of the obligations of the Obligor contained in the DEA other than by performance in full thereof; and (c) any lack of authority of any agent or other person acting or purporting to act on behalf of Obligor, or any defect in the formation of Obligor.

ARTICLE II

MISCELLANEOUS

Section 2.1 No delay or omission to exercise any right or power accruing upon any default, omission or failure of performance hereunder shall impair any such right or power or shall be construed to be a waiver hereof, but any such right and power may be exercised from time to time and as often as may be deemed expedient. In order to entitle TxDOT to exercise any remedy reserved to it in this Absolute Guaranty, it shall not be necessary to give any notice, other than such notice as may be herein expressly required. In the event any provision contained in this Absolute Guaranty should be breached by any party and thereafter duly waived by the other party so empowered to act, such waiver shall be limited to the particular breach so waived and shall not be deemed to waive any other breach hereunder. No waiver, amendment, release or modification of this Absolute Guaranty shall be established by conduct, custom or course of dealing, but solely by an instrument in writing duly executed by the parties thereunto duly authorized by this Absolute Guaranty.

Section 2.2 This Absolute Guaranty is a condition for approval of Guarantor's assignment of the DEA, and supersedes all prior agreements and understandings, both written and oral, among the parties with respect to an approved assignment .

Section 2.3 The invalidity or unenforceability of any one or more phrases, sentences, clauses or Sections contained in this Absolute Guaranty shall not affect the validity or enforceability of the remaining portions of this Absolute Guaranty, or any part thereof.

Section 2.4 This Absolute Guaranty shall be governed by and construed in accordance with the laws of the State of Texas.

Section 2.5 Terms used but not defined herein shall have the meanings ascribed to such terms in the DEA.

Section 2.6 Guarantor irrevocably:

(a) agrees that any suit, action or other legal proceeding arising out of this Absolute Guaranty may be brought only a court of competent jurisdiction of the State of Texas;

(b) consents to the jurisdiction of each such court in any suit, action or proceeding; and

(c) waives any objection which it may have to the laying of venue of such suit, action or proceeding in any such court.

Section 2.7 Guarantor agrees that neither its obligations hereunder nor any remedy for the enforcement hereof shall be impaired, modified, changed, released or limited in any manner whatsoever by any impairment, modification, change, release or limitation of the liability of Obligor, or any amendment or modification of any of the terms of the DEA or any extension of the term of the DEA, or by any assignment or transfer of any interest therein, or by the invalidity of the DEA for any reason, or by the relief of Obligor from any of Obligor's obligations under the DEA, including, without limitation of the generality of the foregoing, the rejection or assignment of the DEA in connection with proceedings under any present or future provisions of the federal Bankruptcy Act, or any similar law or statute of the United States or any state thereof.

Section 2.8 Guarantor waives any right to require TxDOT to proceed against Obligor or pursue any other remedy in TxDOT's power whatsoever as a condition to TxDOT's right to proceed against Guarantor. Guarantor hereby expressly waives: (i) notice of acceptance of this Absolute Guaranty and of presentment, demand and protest; (ii) notice of any default hereunder or under the Development Agreement and all indulgences; (iii) demand for observance, performance or enforcement of any terms or provisions of this Absolute Guaranty or of the DEA; and (iv) all other notices and demands otherwise required by law which the undersigned may lawfully waive. Guarantor also waives, to the maximum extent permitted by law, all defenses available

to a guarantor or surety, whether the waiver is specifically herein enumerated or not. This Absolute Guaranty is an Absolute Guaranty of performance of the DEA.

Section 2.9 All notices, demands and other communications required or desired to be given hereunder shall be in writing and shall be deemed to have been properly given when hand delivered or sent by United States certified mail, return receipt requested, postage prepaid, addressed as follows:

To Guarantor:

name/address

To TxDOT:

_____

_____

_____

Attention: _____

All such notices shall be considered given on the date when delivered, if delivered by hand, or three (3) days after deposit in the United States Mail, addressed as set forth above, if mailed.

IN WITNESS WHEREOF, Guarantor has caused this Absolute Guaranty to be executed in its name and behalf as of the date first above written and affirms that the signatory below has authority to bind Guarantor to the terms and provisions herein stated.

<Developer name>

By: _____

Name:_____

Title:_____

Exhibit A

The Texas Department of Transportation (**TxDOT**) is the owner of a certain property and improvements located at IH30 and Collins Street, Arlington, Tarrant County, Texas, more particularly described by metes and bounds as follows:

BEING an 18.37 acre tract of land located in the G.W. Ragan Survey, Abstract No. 1288, in the City of Arlington, Tarrant County Texas, said tract being part of a called 67.78 acre tract described by deed to the State of Texas as recorded in Volume 2927, Page 199, Deed Records Tarrant County Texas (DRTCT) and being more particularly described by metes and bounds as follows (bearings referenced to the State Plane Coordinate system, North Central Zone, NAD 1983, as determined by VRS – GPS observations, distances shown are surface values):

COMMENCING at point for the most northerly corner of said State of Texas parcel, same being on the west right of way for State Farm to Market Highway 157 (FM 157) variable width right of way, as described by deed to the State of Texas recorded in Volume 1860, Page 107, DRTCT, and being a point in the easterly right of way for Ryan Plaza Drive (50' right of way) as dedicated by Parkway Central Addition, an Addition to the City of Arlington as recorded in Volume 388-53, Page 96, Plat Records Tarrant County Texas (PRTCT), said point being located South 00º36'32" West, a distance of 373.83 feet from a ½ -inch iron rod found for the common easterly corner for Lots 1 and 2, Block 1, Park Central Addition an, Addition to the City of Arlington as recorded in Volume 388-57, Page 609, PRTCT:

THENCE South 00º10'05" East with the west right of way for FM 157and the east line of said 67.78 acre tract, a distance of 261.65 feet to a point;

THENCE South 88º15'19"West, a distance of 8.83 feet to a set 5/8-inch iron rod with yellow plastic cap marked "SAM INC" (set iron rod) for the POINT OF BEGINNING, said point being located at FM 157 centerline station 614+61.71, 58.8' left;

THENCE southerly, generally 30-foot west of and parallel to or concentric with the proposed west back of curb for FM 157 as follows:

1) THENCE South 01º44'41" East, a distance of 191.59 feet to a set iron rod for the beginning of a curve;

2) THENCE southerly along the arc of said curve to the right, having a central angle of 04º00'42", a radius of 1920.00 feet, an arc length of 134.43 feet and a chord of South 00º15'40" West, 134.40 feet to a set iron rod for the end of said curve;

3) THENCE South 02º16'01" West, a distance of 200.00 feet to a PK nail set for the beginning of a curve;

4) THENCE southerly along the arc of said curve to the right, having a central angle of 09º59'57", a radius of 320.00 feet, an arc length of 55.85 feet and a chord of South 07º15'59" West, 55.78 feet to a set iron rod for the end of said curve;

5) THENCE South 12º15'58" West, a distance of 32.86 feet to a set iron rod for corner;

6) THENCE South 89º44'54" West leaving said parallel alignment, a distance of 7.44 Feet to a point for corner;

7) THENCE South 00º15'06" East, a distance of 36.27 feet to a set iron rod for corner;

8) THENCE North 89º44'54" East, a distance of 5.00 feet to a set iron rod for corner;

9) THENCE South 00º15’06” East, generally along the west face of a series of existing wooden poles for an ONCOR power line, a distance of 310.54 feet to a set iron rod for the beginning of a curve;

10) THENCE southwesterly along the arc of said curve to the right, having a central angle of 89º38’27”, a radius of 20.00 feet, an arc length of 31.29 feet, and a chord of South 44º34’08” West, 28.20 feet to a set iron rod for the end of said curve;

11) THENCE South 89º25’33” West, being 20-foot north of and parallel to the proposed north edge of pavement for the west-bound service road for Interstate Highway 30 (variable width right of way), a distance of 802.77 feet to a set iron rod for corner;

12) THENCE North 77º22’27” West, a distance of 387.98 feet to a PK nail set for corner;

13) THENCE North 14º56’54” West, a distance of 269.08 feet to a set iron rod for the beginning of a non-tangent curve;

14) THENCE northeasterly along the arc of said curve to the right, being 20-foot south of and concentric to the existing south curb line for Ryan Plaza Drive (undefined right of way), having a central angle of 54º17’10”, a radius of 68.00, an arc length of 64.43 feet and a chord of North 62º18’02” East, 62.05 feet to a set iron rod for the end of the curve;

THENCE northeasterly, generally 20 feet south of and parallel to or concentric with said south curb line as follows:

15) THENCE North 89º25’34” East, a distance of 65.91 feet to a set iron rod for the beginning of a curve;

16) THENCE along the arc of said curve to the left, having a central angle of 45º13’29”, a radius of 695.00 feet, an arc length of 548.58 feet and a chord of North 66º48’50” East , 534.45 feet to a set iron rod for the end of said curve;

17) THENCE North 44º12’05” East, a distance of 237.18 feet to a set iron rod for the beginning of a curve;

18) THENCE along the arc of said curve to the right, having a central angle of 16º25’32”, A radius of 605.00 feet, an arc length of 173.44 feet and a chord of North 52º24’51” East, 172.85 feet to a set iron rod for the end of said curve;

19) THENCE North 60º33’46” East, a distance of 253.76 feet to a set iron rod for the beginning of a non-tangent curve;

20) THENCE along the arc of said curve to the right, having a central angle of 28º38’30”, a radius of 255.00 feet, an arc length of 127.47 feet and a chord of North 74º55’24” East, 126.15 feet to a set iron rod for the end of said curve;

21) THENCE South 46º15’55” East, a distance of 42.78 feet to the POINT OF BEGINNING and containing 18.37 acres.

THE FOLLOWING INFORMATION IS AVAILABLE ONLY ON DISKETTE OR INTERNET AT www.txdot.gov/mnt/contract/rfp.htm

ATTACHMENT A – Surveys, Metes and Bounds (Construction Sites)
ATTACHMENT B – Facility Design and Production Guidelines
ATTACHMENT C – Wage Rates (Buildings and Highways)
ATTACHMENT D – Project-Specific Documents
ATTACHMENT E – Prototypical Maintenance Facility Construction Documents
ATTACHMENT F – Prototypical Area Engineer & Maintenance Facility Construction
ATTACHMENT G – ITEM 506 Temporary Erosion Control

ATTACHMENT A
Metes and Bounds (Construction Sites)
Fort Worth District Headquarters, Glen Rose, and Mineral Wells

THIS PAGE LEFT BLANK INTENTIONALLY

INFORMATION AVAILABLE ONLY BY INTERNET OR BY DISC

http://www.dot.state.tx.us/mnt/contract/rfp.htm

Exhibit B
Fort Worth District Headquarters

The Texas Department of Transportation is the owner of certain property with improvements located at 2501 Southwest Loop 82, Fort Worth, Tarrant County, more particularly described by metes and bounds as follows:

Being all of that certain 40.6475 acres of land situated in the M.J. Arocha Survey, Abstract I and the J.B.M. Smith Survey Abstract 1412, City of Fort Worth, Tarrant County, Texas, and being a portion of that certain called 35.312 acre tract of land conveyed to the State of Texas by instrument recorded in Volume 2920, Page 218 of the Deed Records, Tarrant County, Texas; A portion of Lot 4-R, Block I, Wedge Hills Subdivision, an addition to the City of Fort Worth as shown on a plat recorded in Volume 388-111, Page 78, Plat Records, Tarrant County, Texas, and being all of that called 6.154 acre Tract of land conveyed to the State of Texas by instrument recorded in Volume 9277, Page 1989, said Deed Records and further described as follows:

BEGINNING at a 5/8-inch iron rod with cap stamped "SURVCON" set for the northeasterly corner of said 35.312 acre tract being on the southerly line of I-20 (a variable width right of way (ROW)), as conveyed to the State of Texas by instrument recorded in Volume 2724, Page 33, said deed records, same being on the westerly ROW of the Gulf Colorado and Santa Fe Railroad (an apparent 100-foot wide ROW no deed of record found);

THENCE South 01° 25' 24" West along said westerly line, passing a PK nail set at a chain link fence post at 1945.32 feet and continuing for a total distance of 1955.32 feet to the northerly ROW line of Edgecliff Road (a variable width ROW, 50 foot wide at this point) as shown on plat of Wedge Hills Subdivision, an addition to the City of Fort Worth, as shown on plat recorded in Volume 388-10, Page 33, Plat Records, Tarrant County, Texas;

THENCE South 89° 30' 20" West, along said northerly line, 106.23 feet;

THENCE North 01° 35' 40" West, passing a PK nail set in concrete for the southeasterly corner of Lot 5-R, Block 1, Wedge Hill Subdivision, an addition to the City of Fort Worth, as shown on plat recorded in Volume 388-III, Page 78 of said plat records at 10.19 feet and continuing for a total distance of 209.02 feet to a ½-inch iron rod with cap stamped "Landes and Associates" found for the common easterly corner of Lots 4-R and 5-R, said Block 1;

THENCE South 89° 31' 54" West, along the common line of said lots, 200.05 feet to a ½-inch iron rod with cap stamped "Landes and Associates" found for a common corner of said lots;

THENCE South 01° 34' 06" East, along the common line of said lots, 199.11 feet to a 5/8–inch iron rod with cap stamped "SURVCON" set on the aforesaid northerly ROW line of Edgecliff Road;

THENCE, along said northerly line the following three courses:

1) South 89° 30' 20" West, 152.99 feet to a point from which a 5/8-inch smooth iron rod found bears south 00° 05'51" West, 1.0 feet and being the beginning of a curve to the right whose center bears north 00°29'40" West;

2) Westerly 133.81 feet along the arc of said curve to the right, having a central angle of 1° 00' 00" and a radius of 697.00 feet to a point from which a 5/8–inch smooth iron rod found bears south 00°03°37' West, 11 feet;

3) North 79° 29’ 40” West, 91.30 feet to a 5/8-inch iron rod with cap stamped “SURVCON” set for the common southerly corner of said Lot 4-R and Lot 1, Block 1, Wedge Hills Subdivision, an addition to the City of Fort Worth, as shown on map recorded in Volume 388-45, Page 5, said deed records;

THENCE, North 01° 34’ 06” West, along the common line of said Lot 4-R and Lot I, 212.75 feet to a 5/8-inch smooth iron rod found;

THENCE North 89° 29’ 54” East, 15.00 feet to a PK nail set at a chain link fence post;

THENCE North 01° 34’ 06” West, 262.40 feet to a PK nail set at a chain link fence post;

THENCE South 89° 23’ 54”, 15.00 feet to a 5/8-inch iron rod found on the common line of the aforesaid Lot 4-R and Lot 3-R-1, Block 1, Wedge Hills Subdivision, an addition to the city of Fort Worth, Texas, as shown on map recorded in Volume 388-120, Page 86, said deed records;

THENCE North 01° 34’ 06” West, 40.00 feet to a PK nail set in concrete at a chain link fence post for the common northerly corner of said lots and being on the westerly most south line of the aforesaid 35.312 acre tract;

THENCE South 89° 26’ 24” West, along a common line between said southerly line and the northerly line of said Lot 3-R-I, passing a 5/8-inch iron rod with TxDOT aluminum cap found for the northwesterly corner of said Lot 3-R-I at 185.42 feet and continuing for a total distance of 204.13 feet to the westerly most southwest corner of said 35.312 acre tract and being in McCart Street (A variable width ROW, no deed of record found);

THENCE North 00° 32’ 13” West, along the westerly line of said 35.312 acre tract, 1330.50 feet to a point in McCart Street;

THENCE North 89° 27’ 58” East, 21.15 feet to a 5/8-inch iron rod with cap stamped “SURVCON” set on the aforesaid southerly ROW line of I-20;

THENCE along said southerly line the following six (6) courses;

1) NORTH 08° 13’ 45” East, 272.93 feet to a 5/8-inch smooth iron rod found;

2) NORTH 56° 00’ 45” East, 67.19 feet to a 5/8-inch smooth iron rod found;

3) SOUTH 76° 40’ 15” East, 544.58 feet to a 5/8-inch smooth iron rod found;

4) SOUTH 74° 58’ 15” East, 83.02 feet to a 5/8-inch smooth iron rod found;

5) SOUTH 71° 53’ 15” East, 93.23 feet to a 5/8-inch smooth iron rod found;

6) SOUTH 69° 33’ 52” East, 157.00 feet to the POINT OF BEGINNING and containing 40.6475 acres of land which 0.6333 acres are situated in the apparent right-of- way of McCart Street and Edgecliff Road leaving a net computed area of 40.0142 acres of land.

Exhibit C
Glen Rose Maintenance Facility

The Texas Department of Transportation is the owner of certain property with improvements located on SH 144, Glen Rose, Somervell County, more particularly described by metes and bounds as follows:

Being 15.714 acres of land, more or less, situated in the counties of Hood and Somervell, State of Texas, and being out of the Galveston County School Land Survey, Abstract No. 36 and being a part of a tract of land conveyed by Alberta H. Lunger and Harold L. Lunger to Brite Divinity School by deed dated May 24, 1990 and recorded in Volume 10, Page 820 of the Real Records, Somervell County, Texas, which 15.714 acres of land, more or less, more particularly described as follows:

BEGINNING at a found 5/8-inch iron pin with an aluminum cap marked 1807 in the existing west right of way (ROW) line of SH 144 said point being South 31°02'00" East, a distance of 833.95 feet from a found ½ inch iron pin with a red cap marked Clark Survey at the northeast corner of said school tract; said point also being 50.00 feet west of and at right angle to centerline survey station 500+79.21 of said highway;

THENCE South 58°58'02" West, along the north line of a tract of land described in Volume 37, Page 607, said Real Records a distance of 1,581.87 feet to a found 5/8-inch iron pin with an aluminum cap marked 1807;

THENCE North 28°50'08" West, along the east line of a tract of land described in Volume 63, page 297, Deed Records, Somervell County, same being the southwest line of said school tract, and generally along a fence line, a distance of 435.32 feet to a set 5/8-inch iron pin with an aluminum cap marked Texas Department of Transportation;

THENCE North 58°58'02" East, along the North line of the herein described tract a distance of 1,565.18 feet to a set row marker in the existing west ROW of SH 144; from which a found concrete monument with a brass cap marked R.P.S. No. 314 in Hood, Somervell County line bears South 31°26'43" east, a distance of 98.36 feet;

THENCE South 31°02'00" East, along said existing west ROW line, a distance of 435.00 feet to the POINT OF BEGINNING.

Directional control was based on the existing west ROW line SH 144.

Exhibit D
Mineral Wells Maintenance Facility

The Texas Department of Transportation is the owner of certain property with improvements located at 2400 US 180, Mineral Wells, Palo Pinto County, more particularly described by metes and bounds as follows:

Being a parcel or tract of land out of a 36.667 acre tract, more or less, in the northeast ¼ of Section 46, Block "A", east of the Brazos River, T.& P.R.R. Company Survey, Abstract 1577 in Palo Pinto County, conveyed to George Lee Martin, Jr., by Dallas A. Treadway and wife Donna Mae Treadway by deed dated June 28, 1957, which deed is of record in Volume 265, Page 312, of the Deed Records of Palo Pinto County, Texas.

BEGINNING at a point in the West boundary line of the said 36.667 acre tract South 1°36'00" West, along the said West boundary line a distance of 2,610 feet, more or less, from the northwest corner of the same. Said point being in the common east boundary line of the L.O. Waters tract and is in the proposed North right of way (ROW) line of US 180, 50 feet opposite proposed centerline station 1816+88.00. Said point is the southwest corner of the tract herein conveyed;

THENCE North 01° 36'00" West, along and with aforesaid Waters-Martin common boundary line, a distance of 819.01 feet to the northwest corner of the tract herein conveyed;

THENCE North 79° 03'00" East, a distance of 292.70 feet to the most northerly corner of the tract herein conveyed;

THENCE South 34°08'00" East, a distance of 230.98 feet to a point being a northeast corner;

THENCE South 03°57'00" East, along the east line of the tract herein conveyed, a distance of 673.85 feet to a point in the proposed north ROW line of US 180.

THENCE South 88°36'00" West, along the proposed north ROW line of US 180, a distance of 440.59 feet to the POINT OF BEGINNING and containing 8.00 acres of land, more or less.

ATTACHMENT B
Architectural Design and Production Guidelines

THIS PAGE LEFT BLANK INTENTIONALLY

INFORMATION AVAILABLE ONLY BY INTERNET OR BY DISC

http://www.dot.state.tx.us/mnt/contract/rfp.htm

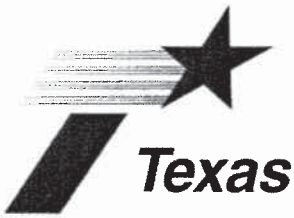

Texas Department of Transportation

FACILITY DESIGN STANDARDS AND PRODUCTION GUIDELINES

REVISED: March 2009

INDEX

PART 1 – ARCHITECTURAL DESIGN STANDARDS

PART 2 – ENGINEERING STANDARDS

PART 3 – ENERGY CONSERVATION STANDARDS

PART 4 – SPECIAL PROVISION COMPUTER FILES FOR DOCUMENT AND INFORMATION EXCHANGE

PART – 1

ARCHITECTURAL DESIGN STANDARDS

TxDOT Maintenance Division
Facilities Management Section
Capital Improvement Program Branch

Architectural Design Standards

TABLE OF CONTENTS

NUMBER	TITLE	ISSUE DATE	Rev. No.	Pages
A1.01	General Requirements	March 2009	0	13
A1.02	Site Improvements	March 2009	0	4
A1.03	Building Exterior	March 2009	0	7
A1.04	Building Interior	March 2009	0	7

TxDOT Maintenance Division
Facilities Management Section

Architectural Design Standards

Title:	**General Requirements**	**Number:**	**A1.01**
Issue Date	**March 2009**	**Rev #:**	**0**

Approved: _____ Capital Improvements Supervisor

A. CODES , REFERENCES, STANDARDS & REGULATORY REQUIREMENTS

1 The following federal, state, local codes, industry, references, standards, ordinances, and regulatory requirements listed below shall be complied with on any Capital Improvement Program (CIP) project for TxDOT. If there are any conflicts between any standards, then the more stringent requirement will govern and will be enforced.

2 The Authority Having Jurisdiction (AHJ) for any CIP project is the Owner, TxDOT, as an agency of the State of Texas.

B. CODE REQUIREMENTS

1 Non-Regulatory Documents: In addition to specific regulatory requirements, the following documents are also incorporated into the definition of "the code" for the purposes of this project, except for administrative provisions contained therein; where referenced, the role of the code official described in the document will be performed by TxDOT, the AHJ, or its authorized agent.

a) IBC (International Building Code) - Latest Edition

b) NFPA 10, Portable Fire Extinguishers (National Fire Protection Assoc.)

c) NFPA 70, National Electrical Code (NEC)

d) NFPA 80 – Fire Doors and Windows.

e) NFPA 101, Life Safety Code Handbook, Latest Edition

f) UPC (Uniform Plumbing Code) , Latest Edition

g) UMC (Uniform Mechanical Code), Latest Edition

h) FED–STD–795 – Uniform Federal Accessibility Standards (UFAS)

i) National Historic Landmark District

C. FEDERAL REGULATORY REQUIREMENTS

1 ADA (Americans with Disabilities Act) of 1990, as a public accommodation, as implemented in the Code of Federal Regulations (CFR):

a) 29 CFR 1910; Occupational Safety and Health Standards.

b) 29 CFR 1926; Safety and Health Regulations for Construction

c) 40 CFR 61; National Emissions Standards for Hazardous Air Pollutants.

d) 40 CFR 261; Identification and Listing of Hazardous Waste.

e) 40 CFR 262; Standards Applicable to Generators of Hazardous Waste.

f) 40 CFR 265; Interim Status Standards for Owners and Operators of Hazardous Waste Treatment, Storage, and Disposal Facilities.

g) 40 CFR 763; Asbestos.

h) 42 CFR 84; Approval of Respiratory Protective Devices.

i) 49 CFR 107; Hazardous Materials Program Procedures.

j) 49 CFR 171; General Information, Regulations and Definitions

k) 49 CFR 172; Hazardous Materials Table, Special Provisions, Hazardous Materials Communications, Emergency Response Information, and Training Requirements.

l) 49 CFR 173; Shippers – General Requirements for Shipments.

D. STATE REGULATORY REQUIREMENTS

1 TxDOT REVIEW

a) MNT Division / Facilities Management Section Review sets must include drawings, specifications, design calculations and cost estimate submitted for TxDOT review at the Schematic Design, Design Development, 50%, 90% and 100% Construction Document Phases unless identified differently in the A/E consultant contract. TxDOT will issue review comments at the SD, DD and 90% CD Phases that will require a formal response from the A/E team. The 50% submission is a progress set and the 100% is the sealed set ready for bidding.

b) Occupational Safety Division (OCC) must review all Preliminary Designs at the point of finalization, but prior to District approval. PM must forward set of drawings for review to OCC.

2 TDLR –WATER WELL

a) If a water well is required on the site, the Texas Board of Well Drillers standards must be met as regulated by the Texas Department of License Regulation (TDLR) (see Civil Standards).

3 TCEQ – WATER SYSTEM

a) All public water systems must comply with TCEQ Public Water Standards (see Civil Standards).

4 TCEQ – SEPTIC SYSTEMS (OSSF)

a) Any new septic system, or OSSF (On-Site Sewage Facility) must comply all TCEQ Chapter 285 Rules and Regulations (see Civil Standards).

5 TDLR – TEXAS ACCESSIBILITY STANDARDS

a) Construction Documents and new construction must comply with all Texas Accessibility Standards (TAS) requirements and be submitted to Texas Department of License Regulation (TDLR) for review by the A/E of Record or the Owner's rep if an A/E is not involved in the design. The A/E consultant will pay for the TAS review and construction inspection, or the agency will pay fees if an A/E is not in involved.

6 TCEQ – WETLANDS

a) Consultant may be directed by TxDOT to have an environmental study performed to determine if the project is located on land designated as Texas Wetlands (Note: Study may have been completed prior to consultant involvement. If completed, TxDOT will give necessary information to consultant). If the project is located on Texas Wetlands, consultant must coordinate with the Texas Commission on Environmental Quality (TCEQ) to insure necessary restrictions and precautions are followed. Precautions, obligations and restrictions should be noted within the Contract Documents near the scope of work, to alert the bidding contractors of their obligations.

7 SECO - ENERGY CONSERVATION

a) Per the State Energy Design Standard for New State Buildings, the Architect/ Engineer must certify, in writing, compliance with ASHRAE 90.1-Latest Edition and with the TX.GOV.CODE, TITLE 4, CHAPTER 447.004 as administered by the State Energy Conservation Office (SECO).

8 TBAE (Texas Board of Architectural Examiners)

a) Projects must comply with the statutes that regulate professional design services for architects, landscape architects and interior designers. Refer to the appropriate regulatory agency to verify current requirements when professional design services are mandatory.

b) The Texas Architect Practice Act (When an Architect is required) regulates the types of public projects that require an architect. According to Chapter 1051, Subchapter K, par. 1.212 of the Texas Occupations Code, an Architect is required for Publicly Owned Buildings if:

c) New construction

1) Exceeds $100,000, and

2) Intended for education (instructional purposes), assembly (50+ people) or office/business use

d) Alterations to Existing Buildings

1) Exceeds $50,000, and

(a) Intended for education (instructional purposes), assembly (50+ people) or offices/ business use

(b) The alteration or addition requires removal, relocation or addition of a wall, or partition, or the alteration, or addition of an exit.

(c) Alterations to Existing Buildings (exempt if not considered Substantial Alteration)

(d) Substantial Alternation if the structural change must be prepared by a licensed engineer (See Engineer Practice Act requirements below).

(e) Substantial Alteration if the exit way change will affect a path of egress intended to be used by more than fifty (50) persons.

E. HEALTH AND SAFETY

1 Fire Resistance: Provide construction in accordance with IBC- Latest Edition.

2 Prevention of Accidental Injury: As required by code and as follows:

a) Safety Glazing: As defined by 16 CFR 1201; provide in locations required by code, glazed areas subject to human impact, glazed areas at walking surfaces and doors.

b) Lightning Hazard: Design to prevent damage to occupants, structure, services, and contents due to lightning strikes.

1) Provide protection equivalent to that specified in NFPA 780; supplementary strike termination devices, ground conductors, and grounding electrodes are required only where the integral portions of the structure cannot perform those functions.

c) Health Hazards:

1) Design to prevent growth of fungus, mold, and bacteria on surfaces and in concealed spaces.

2) Hazardous Construction Materials: Design and construct to comply with the requirements of the code.

3) Indoor Air Quality: Design and construct to comply with the code and the acceptable air quality as defined by ASHRAE 62.

3 Physical Security: In addition to any provisions that may be required by law or code, design and construct both exterior and interior spaces to incorporate accepted principles of Crime Prevention Through Environmental Design (CPTED), using natural (as opposed to technological) methods of providing surveillance, access control, and territorial reinforcement wherever possible. Provide minimum protective measures such as an unobstructed view around the facility, elimination of locations of concealment, lighting that focuses away from the building, and minimum number of shadow areas.

4 Electrically–Operated Equipment and Appliances: UL listed for application or purpose to which they are put; suitable for wet locations listing for exterior use.

F. STRUCTURE

1 Building Loads: Accommodate loads as prescribed by code, IBC – Latest Edition for each specific use as listed in the code.

G. OTHER APPLICABLE STANDARDS

1 The following standards shall apply to technical features of design and construction. Standards shall be the current issue in effect at the time of issuance the Construction Documents. No attempt has been made to list all applicable codes and standards; therefore, where a particular design aspect is not covered by any of the codes or standards listed, nor by the requirements specified herein, the A/E shall be guided by other nationally recognized and accepted codes or standards which do apply. The AHJ shall be TxDOT's Facility Management Director or representative.

2 TxDOT Standards are listed below :

a) Engineering Services Branch

b) Telecommunication Infrastructure System Environmental And Technical Specifications

c) Fuel Storage/Delivery System Standard

d) CAD Production Standards

e) Asphalt Paving Standards

H. LOCAL PERMITS

1 TxDOT projects on state owned property will not require a building permit from the local government. The Texas Attorney General has issued an opinion on this matter and a copy is available from the Project Manager as needed if local authorities demand building permits.

2 All project related work outside of state property and for utility connections may require permits that will be the General Contractors responsibility to obtain and pay any costs.

I. DURABILITY

1 Expected Service Life Span: The overall expected functional service life of the facility is fifty (50) years. During the design and construction of a state facility, the A/E and the General Contractor need to base decisions on durability. Service life of individual elements may differ from the overall project life span and are defined in other Sections.

2 Animals: Do not use materials that are attractive to or edible by animals or birds. Prevent animal entry into building, attic space or under foundation.

3 Insects: Do not use materials that are edible by insects, unless access by insects is prevented. Prevent insect entry into building, attic space or under building.

J. PROTOTYPICAL BUILDING DESIGNS

1 Prototype building designs consist of a pre-engineered steel structure except for metal studs and masonry veneer at office area, insulated metal siding exterior through out.

2 Prototypical building designs are available from the FM Project Manager.

K. SPECIFICATION FORMAT

1 Provide specifications in the Construction Specifications Institute's (CSI) 16 Division format with 3 Part Section format (General, Products, Execution).

L. OPERATION AND MAINTENANCE

1 Space Efficiency: Minimize floor area required while providing specified spaces and space relationships, plus circulation and services areas required for functions.

2 Energy Efficiency: Minimize energy consumption while providing function, amenity, and comfort specified.

a) Provide energy efficient design using procedures and values to meet those specified in ASHRAE 90.1, 2007.

b) Evaluate the life cycle cost for large facilities for source cooling and heating. Submit the analysis with preliminary design:.

1) Cooling: Air–cooled vs. water–cooled water chilling units.

2) Heating: Individual electric heating elements where required vs. gas–fired hot water boilers, pumps, and piping

3) Water Heating: Electric vs. gas vs. solar water heating.

3 Water Consumption: Minimize water consumption and comply with rainwater collection statue for buildings with 10,000 square feet of roof area. Provide a separate water meter for landscaping purposes.

4 Waste (Trash/Debris) Removal during Construction: The General Contractor is required to remove all construction debris and trash on a regular basis to keep site clean during construction. GC must recycle as much waste as practical with a goal of 80% construction waste recycled diverting materials from landfill.

5 Waste Recycling at Facilities: Provide space for recycling containers inside buildings and on site if recycling is available in the local area. For information about the recycling program for TxDOT contact the GSD / Recycling Manager.

6 Ease of Operation: Provide facility, equipment, and systems that are easily operated by personnel with a reasonable level of training for similar activities.

7 Ease of Maintenance: Minimize the amount of maintenance required and determine that expertise and supplies are available to maintain equipment and facility systems as specified. Maintenance must be economical for CIP facilities.

8 Ease of Repair: Elements that do not meet the specified requirements for ease of repair may be used, provided they meet the specified requirements for ease of replacement of elements not required to have service life span equal to that specified for the project as a whole; the service life expectancy analysis and life cycle cost substantiation specified for service life are provided; and TxDOT's acceptance is granted. Assure that repairs to specified equipment can be made by local trades and that parts and equipment can be readily replaced as needed.

M. ELEMENTS AND PRODUCTS

1 Provide products and elements that comply with the following paragraphs.

2 Elements Made Up of More Than One Product:

3 Where an element is specified by performance criteria, the project's construction will be either proven-in-use or proven-by-mock-up, unless otherwise indicated.

a) Proven-In-Use: Proven to comply by having actually been built to the same or very similar design with the same materials as proposed and functioning as specified.

b) Proven-by-Mock-Up: Compliance reasonably predictable by having been tested in full-scale mock-up using the same materials and design as proposed and functioning as specified. Testing need not have been accomplished specifically for this project; when published listings of independent agencies include details of testing and results, citation of test by listing number is sufficient (submittal of all test details is not required).

c) The A/E Team may choose whether to use elements proven–in–use or proven-by-mock-up, unless either option is indicated as specifically required.

d) Where test methods accompany performance requirements, use those test methods to test the mock-up.

N. COLOR SELECTION FOR BUILDING MATERIALS AND SURFACES

1 All color selections and overall color scheme must receive the approval of the Facilities Management Director of the Maintenance Division. The submission of color scheme shall be in the form of a color board with samples identified by product name and location within the building facility. This includes major exterior and interior finishes. Color selection must be submitted all at one time with 100% Design Development submission.

O. ASBESTOS CONTROL

1 No product shall be specified that contains asbestos. The Architect / Engineer shall provide a statement in the specifications that no asbestos products where specified.

2 General Contractor must make all subcontractors aware that secondary products that are not specifically project specified, but supplied by them on the project site must be verified to not contain asbestos. The General Contractor shall sign a statement that NO products containing asbestos were used or installed by the General Contractor and subcontractors for the TxDOT project.

3 Specifications shall include the stipulation that all questionable product submittals (floor and ceiling tiles, sealant, exterior sheathing, roofing materials, etc.) shall contain a letter from the material manufacturer's representative stipulating that the product being installed does not contain asbestos. The TxDOT Project Manager shall maintain these letters and/ or MSDS (Material Safety Data Sheet) in the project file.

4 These asbestos related items should be included in the agenda of the Pre-Construction meeting.

P. ENVIRONMENTALLY RESPONSIBLE DESIGN

1 General: In addition to other requirements, provide design and construction of capital facilities that minimizes adverse effects on the natural environment, enhances the quality of the indoor environment, and minimizes consumption of energy, water, construction materials, and other resources.

2 Goals: The goals indicated below as "required" must be achieved. The goals indicated as "desirable" will be given high priority in evaluating the

design phases. The goals indicated as "if possible" must be achieved if the design and site considerations allow. The goals indicated "as specified" have different requirements specified in other Sections.

a) Sitework:

1) Restoration of degraded site areas: Required

2) Minimum surface disturbance: Required

3) Preservation of existing trees and topsoil: Desirable

4) Sediment and erosion control: Required

5) No net increase of storm water runoff: Required

b) Water Conservation:

1) Reduction of water used by plumbing fixtures, appliances, and equipment, in excess of regulatory requirements: Desirable

2) Reduction of potable water use by harvesting rainwater, condensation, etc. as required by HB 4 from 2007 Legislative Session: Required

c) Energy Conservation:

1) State Energy Code: Exceed by 20%, the State Energy Design Code (ASHRAE 90.1.–2007) in the envelope design. The designer shall provide certification of compliance and documentation of energy calculations. Improvement of efficiency through basic building commissioning: Desirable

2) No use of CFC–based refrigerants: Required

d) Conservation of Materials and Resources:

1) Location for collection and storage of recyclables: Required

2) Recycling of construction waste: Required

3) Use of materials containing recycled content: Required

4) Use of local/regional materials: Required

e) Indoor Environmental Quality:

1) Smoking will be prohibited in the building: Required

2) Design and construction that prevents or avoids common causes of indoor air quality problems: Required

3) Use of materials that are low–emitting, , non–toxic, and chemically inert; low VOC finishes: Required by law and/ or as specified

4) Thermal comfort conditions: Required

5) Humidity control: Required

Q. ACOUSTICAL DESIGN – NOISE DESIGN CRITERIA FOR TYPICAL OCCUPANCIES

1 Design in accordance with good practice to achieve conventional ambient noise levels qualified in Noise Criteria (NC) defined in current ASHRAE Applications Volume, Chapter 42 and ANSI S1.8 Reference Quantities for Acoustical Levels ASA 84.

2 The ambient sound level of an occupied space is not to exceed the following NC listed for its respective typical occupancy unless specifically directed otherwise by the Project Manager and TxDOT's statement of project program requirements. Spatial forms, materials, assemblies, systems and equipment selections are to be designed as required to achieve a standard quality of specified level of maximum background noise.

a) Typical Occupancy — Max. Noise Criteria(NC)

1) *Offices:*

(a) Executive	30
(b) Conference rooms	30
(c) Private	35
(d) Open-plan areas	40
(e) Computer-Business machine areas	45
(f) Public circulation	45

2) *Laboratories*

(a) Laboratories		
(b)	Research & General	35
(c)	Teaching	30
(d)	At Hoods: 4' AFF, 3' in front	
	0-50% sash position	55
(e) Corridors		35
(f) Public areas		40

3) *Training Rooms:*

(a) Lecture and classrooms	30
(b) Open-plan classrooms	35
(c) Lecture theaters	30

4) *Recording studios:*

(a) Recording room	20
(b) Sound control room	25
(c) Other control rooms	25

3 These conventional standards of the level of ambient noise in a space are independent of and prior to the installation of any Owner-furnished equipment, furniture and furnishings unless specified otherwise.

4 Other resource material describing conventional ambient noise criteria is available in the current edition of Ramsey/Sleeper Architectural Graphic Standards.

END OF SECTION

TxDOT Maintenance Division
Facilities Management Section

Architectural Design Standards

Title: **Site Improvements** **Number:** **A1.02**

Issue Date: **March 2009** **Rev #:** **0**

Approved: _____
Capital Improvements Supervisor

A. VEHICLE PARKING LOT

1 All public and employee vehicle parking spaces shall be a minimum of nine (9) feet wide by twenty (20) feet long with twenty-five (25) feet driving aisle. Parking spaces for TxDOT vehicles shall be eleven (11) feet wide unless noted otherwise.

2 Provide standard TxDOT concrete curb and gutter design for public parking around main building. Concrete lay-down curb acceptable at other locations if site drainage allows for adequate surface drainage.

3 Provide concrete tire stops at locations without stand-up curbs to control vehicles.

B. SIDEWALKS AND PAVING AT BUILDING PERIMETER

1 Any sidewalk or paving adjacent to the perimeter of a building shall be a minimum of eight (8) inches below the finish floor elevation of the building, and shall be twelve (12) inches below finish floor when possible. Provide a continuous gap between the pavement and the building foundation with steel rebar dowels connecting building and concrete pavement at doors. Provide a maximum. ½" drop of the sidewalk at all exterior doors to comply with ADA requirements.

2 In all instances, provide maximum allowable slope away from the entrances to prevent water from entering the building. Provide a 30' minimum distance from building entrances and the top of curb ADA parking spaces. This distance will allow for a 1:20 or 5% slope so handrails will not be

required for accessible route from ADA parking to the building entrance. Do not design handrails along the accessible route if possible.

3 During Design, the Architect to prepare a site plan drawing that locates spot elevations for sidewalks, pavement next to building, along curbs at parking lots and finish grading around buildings to assure good drainage away from building entrances. During Construction, the General Contractor is required to survey the form-work before pouring walks, curbs and pavement to confirm compliance with spot elevations on Construction Drawings. The A/E must approve the form survey from GC before pouring concrete (see TxDOT specification).

C. LANDSCAPING

1 The typical landscape design shall include an automatic-irrigation system, minimal planting beds around building entrances, minimal select trees to shade windows and parking, and full sod lawn around the main office building between the building and the curbed parking and drives with a 5% slope of the finish grade.

2 If the landscape design is not provided with Bid Set, then specify a $30,000 allowance for each new facility (except District HQ's). Specify how the GC will procure landscape design and qualifications of the designer using a licensed irrigator for irrigation system design. The landscape design must be approved by MNT / FM Director before installation.

3 Provide 4" sleeves under sidewalks and paving for future irrigation system.

4 Implement "xeriscape" approach by selecting native plants for the local climate requiring minimal watering and maintenance. After the first year to establish root system, most plants should need very little water that can be supplied by rainwater collection system.

5 Irrigation system - Use rainwater collection system when possible to water landscaping per state statute for building roofs over 10,000 square feet (see Engineering Section). Provide a separate meter for landscaping irrigation system when water is purchased from a utility.

6 Provide solid curbs or edging for all planting beds to prevent grass spreading into beds from lawn. Shape of planting beds shall be conducive to using a power mower and the entire lawn shall be configured to maintain with a power mower only. Use mow strips along fence line and building edges, or select vegetation that doesn't require mowing.

D. LANDSCAPING ADJACENT TO BUILDING PERIMETER

1 Provide a minimum a twelve (12") vertical drop between building finish floor and the exterior finish grade at lawn or planting beds (this includes top of mulch in planting beds). All masonry weep holes and all siding must be above lawn and planting bed material.

2 Provide a permanent, hard surface to drain water from downspout to outside of planting beds if rainwater is not collected. The surface material can be stone, brick, large rocks, etc. that is complimentary to the building design. Standing water in planting beds from roof drains is unacceptable.

E. ROLLING GATES TO MAINTENANCE YARDS

1 Provide bi-parting, 15' wide rolling gates at yard entrances with concrete center strip for future card readers. Include underground conduit with pull wire for future electrical wiring to avoid cutting pavement. Locate gate in view of Maintenance Supervisor's Office windows. Cantilever gates are unacceptable.

F. FLAG POLES

1 Specify a single, 30' high, brushed aluminum flagpole, tapered from 6" base to 3" top and 6" ball with gold anodized finish.

2 Do not place flagpoles in the center of entrance sidewalks.

3 Do not light flagpoles to conserve energy and to comply with "dark sky initiative".

G. TERMITE CONTROL

1 Specify non-chemical termite control to stop subterranean termites from entering a building by blocking any entrances the foundation with stainless steel mesh and clamps per manufacturer's recommendation. Chemical controls will not be accepted as a substitution.

H. RETENSION PONDS

1 Verify elevations of proposed retention ponds to assure that water will not back up into adjacent areas and will not flood adjacent landowners.

2 Select appropriate vegetation that will be easy to maintain.

I. MONUMENTAL FACILITY SIGN

1 Provide a monumental sign design based on TxDOT standard that is similar to facility design including materials. TxDOT details available.

2 Provide galvanized tube frame for TxDOT provided sign between two columns.

END OF SECTION

TxDOT Maintenance Division
Facilities Management Section

Architectural Design Standards

Title: **Building Exterior** **Number:** **A1.03**

Issue Date: **March 2009** **Rev #:** **0**

Approved: _____
Capital Improvements Supervisor

A. PROTOTYPICAL DESIGNS

1 All new Capital Improvement Program (CIP) facilities must comply with the approved prototypical design for that facility type unless approved by the Facilities Management (FM) Director to make changes, or use another design.

2 Facility prototypical designs will be adapted to the specific site requirements. The architectural building style will reflect the "regional style" of the state and must be appropriate for a TxDOT (public) facility. Preliminary Designs must be approved by the FM Director before proceeding to the Construction Document Phase.

B. STRUCTURE

1 Foundation- Concrete slab on grade on select fill designed per a geotechnical engineering report recommendations based on soil borings. Foundation must be designed by a licensed Professional Engineer in Texas. Use of flyash additive to concrete mix must comply with TxDOT requirement (See Engineering Section).

2 Superstructure- The primary structure to be a pre-engineered, metal building system using economical bay sizes and shapes. Metal building structure must be designed and sealed by manufacturer's PE licensed to practice in Texas. Metal building engineer will not be responsible for designing the concrete foundation.

3 Office Building Columns- 12" web depth (maximum) with straight-leg below ceiling height for office building or occupied spaces with drywall and ceilings.

4 Roof Deck- In conditioned spaces, provide a structural, metal deck welded to steel purlins with rigid insulation board on top of deck.

5 Roof Purlins- In unconditioned spaces, provide steel purlins on rigid frame with metal roof attached to purlins using manufacturer's standard details and complying with MBMA's standards.

6 Insulation (thermal performance)

a) Conditioned space use R19 insulation for walls and R30 for roofs.

b) Semi-heated space use R11 insulation for walls and R19 for roofs.

C. MASONRY

1 Masonry Veneer Walls - The main office building shall be the most prominent building on TxDOT site and will typically have masonry on all public sides- front and each side. Provide galvanized steel lintels at openings. Brick or stone veneer to be selected by Architect from a mock-up panel erected on site by the General Contractor. The Architect will determine the appropriate regional style for the specific locale. Design a metal stud backup with deflection maximum of L/720 of span and horizontal joint reinforcement per BIA guidelines.

2 CMU Walls- Concrete Masonry Unit exterior walls, load bearing or non-load bearing, shall not be used on new TxDOT facilities unless approved by the FM Director for specific needs like Truck Wash Bays, or matching existing building with addition.

D. MASONRY LEDGES

1 For masonry veneer walls, provide a masonry ledge on the foundation a minimum of 4" below finish floor, but on coursing. Provide 1 ½" air space, membrane flashing and weep holes at 4' o.c. to insure proper drainage and the prevention of water entering the building at floor level. Locate weep holes a minimum of 4" above finish grade of lawn or planting beds.

E. METAL WALL PANELS

1 The rear elevation of the main office building facing the Maintenance Yard shall be 24 gauge, pre-finished, metal panels with concealed fasteners. The

utilitarian buildings like shops and storage buildings shall have 24 gauge, pre-finished, metal panels with exposed fasteners to match panel color. Color to match metal panels on all buildings as selected by Architect.

F. TEXAS STAR or STATE SEAL OF TEXAS

1 All new capital program facilities must have a five-pointed, "Texas Star" or the official State Seal of Texas located above the main building entry. The "Texas Star" or the State Seal shall measure twenty-four (24) inches in diameter, minimum, and the star must be three-dimensional. The Star or Seal must be fabricated of stone (cut or cast) or cast metal (stainless steel, aluminum or bronze) as selected by Architect. The "Texas Star" design will consist of a star within a circle with star tips attached to inside of circle. Detail available from FM Section.

G. WAINSCOTS

1 Do not mix materials on walls in horizontal bands around the perimeter of a building. Use uniform material the entire height of walls (metal, brick or stone). Brick soldier or sailor courses are acceptable. The two different metal siding profiles are acceptable with a manufacturer's standard waterproof trim between upper and lower panels.

H. METAL ROOFS

1 All new capital program buildings shall have standing seam metal roofs with a minimum roof slope of 3:12. All metal roofs to have 22 gauge, 16" wide smooth, flat panels without striations, single or double lock seams, Galvalume finish; smooth; fix panels at ridge and floating edge at eave. All roof trim to be 24 gauge with matching Galvalume finish. Roofs shall meet UL 90 uplift rating.

2 Exceptions: Utilitarian buildings, such as storage buildings and shop storage buildings, may have metal roofs with a minimum 1:12 pitch if approved by manufacturer for slope to qualify for warranty. ½ : 12 pitch acceptable on porches if approved by manufacturer. If existing metal roofs have different slope or different color finish, then consideration will be made to match the existing.

3 Insulation- Placement of insulation shall be at the roof plane. Do not place insulation directly above or on ceilings.

4 Ventilation- Provide gravity ventilation in attic spaces or in unconditioned buildings with continuous ridge vents and soffit vents based on climate of

region. Provide operable dampers or adjustable louvers in buildings to control comfort if unconditioned space.

5 Accessories- All roof top accessories attached to the roof or through roof must be provided and installed by the roofing contractor to assure compliance with warranty requirements. Locate all roof penetrations and roof top equipment on back side of roof ridge opposite of main entrance; coordinate with MEP.

6 Skylights are prohibited for CIP projects unless approved by FM Director.

7 Warranty- Specify 20 Year, NDL (No Dollar Limit) Weather- tightness, material and finish warranties for all roofs. Specify two year warranty to provide by the roof installer and the remaining warranty provided by the manufacturer.

I. ROOF OVERHANG

1 All roofs on occupied, air-conditioned buildings shall have a minimum overhang of 36 inches around the perimeter of the building to direct water away from the building exterior and to shade glazing including gable ends.

2 Buildings that are unoccupied and/or unconditioned, do not require overhangs, but the architect may decide to add if needed for other functional purposes.

J. GUTTERS & DOWNSPOUTS

1 All occupied buildings to include gutters and downspouts to prevent water infiltration of building, erosion of topsoil, landscaping damage and staining at the base of perimeter walls. Gutters and downspouts shall be located at the edge of the roof overhang; do not locate internally within the building structure or building envelope.

2 Gutter and eave trim to match roof finish (Galvalume) and downspouts to match wall color.

3 Downspouts at paved areas need to be protected by bollards or specify cast iron boots to prevent damage from vehicles.

4 Pre-cast concrete splash blocks to be sloped away from building at each downspout unless water spills onto concrete pavement. Concrete or stone gutters must be installed through planting beds from downspouts to prevent flooding of beds or erosion of plant materials.

5 Provide calculations of gutter sizes and downspout quantities based on peak rainfall for the specific geographic region.

6 Coordinate downspouts with rainwater collection system used to supply landscape irrigation, truck fill and other non-potable water needs (see Engineering Standards).

K. MEMBRANE ROOFS

1 Low-sloped, roof membranes for existing roof replacements (1/4"/ foot slope minimum and ½"/ foot slope preferred). Specify modified bitumen, EPDM or TPO, fully-adhered membranes unless approved by TxDOT.

2 Slope all roofs to perimeter to drain water into gutters; interior roof drains prohibited unless pre-existing prior to roofing project.

3 Spray foam, PVC or coal tar roof materials are prohibited.

4 Insulation- Placement of insulation shall be at the roof plane. Do not place insulation directly above or on ceilings. If existing roofs do not have minimum slope, then specify tapered, rigid insulation for slope.

5 No flat roofs are allowed on Capital Improvement Program projects.

6 Skylights are prohibited for CIP projects.

7 Warranty- Specify 20 Year, NDL (No Dollar Limit) Weather- tightness, finish and material warranties for all roofs.

L. WINDOWS

1 Windows located within occupied building areas, conference rooms and meeting rooms shall be operable. Single hung, clear anodized aluminum frames glazed with tinted, 1" insulated, low-E glass windows are required in typical buildings. If a room contains multiple windows, it is not necessary for all of the windows within the space to be operable. Include a sufficient number of operable windows in each space to provide suitable fresh air by cross- ventilation. Aluminum screens required on all operable windows.

M. DOORS

1 Aluminum Doors- Clear anodized aluminum door at all main entrances that match aluminum windows with 1 ¾" face frame; 3'-0"x 7'-0" minimum size of door opening and full, 1" insulated glass; solid, brushed stainless steel pulls.

2 Hollow Metal Doors & Frames- Hollow metal doors shall be full, flush seamless,

1 ¾" thick, 18 ga. galvanized steel, factory primed and field painted. Provide vision panels on exterior doors unless noted otherwise. Hollow metal frames shall be 16 ga., galvanized, primed and painted with welded, mitered corners & ground smooth welds.

N. DOOR HARDWARE

1 Door hardware to be solid, stainless steel with brushed finish; all doors to include ball-bearing hinges with non-removable hinges, lever handle with Best, 7 pin locksets with removable cores to TxDOT keying system, deadbolt, closer, hold-open device, door stop, silencers, kick-plate and compatible with TxDOT security card reader system.

O. STOREFRONT SYSTEMS

1 Storefront systems that terminate at the floor level shall have a positive drop of a minimum of ½" and an aluminum subsill set in full bed of mastic.

P. VESTIBULES & COVERED PORCHES

1 Air-lock type vestibules at the building entrance are not allowed unless the specific site requires wind protection, or it vestibule is approved by the FM Director.

2 Covered porches are acceptable for main entrances to office building, breezeways between buildings and loading areas.

Q. DOOR THRESHOLDS

1 Provide a ½" drop at the threshold of all exterior, personnel doors that complies with ADA. Aluminum threshold to be sealed continuously between threshold and slab with full bed of mastic or continuous foam strip. Provide an adjustable, aluminum door bottom with neoprene strip and rain shield for all doors exposed to driving rain. Neoprene strip must be adjustable to completely seal door bottom. A standard TxDOT door sill detail is available from FM Section.

R. OVERHEAD DOORS

1 All overhead doors shall be manual, coiling type, 3 rows of vision panels, full width at 5' above finish floor; insulated in conditioned space. Powder coat finish as selected by the Architect.

2 All overhead doors shall utilize 3" tracks if sectional doors used to match existing.

3 Provide a ¾" drop at the threshold of all overhead doors to assist in forming a seal at the door. The pre-fabricated sill shall be a single, galvanized steel angle with anchor bolts embedded in the concrete.

S. LOUVERS & VENTS

1 All exterior wall louvers shall have a 4" deep, extruded aluminum frame with drainable blades; standard Kynar or powder coat finish and aluminum insect screen with a minimum of 40% free air intake/ exhaust performance (coordinate with mechanical engineer).

2 If an opening requires the louver to be adjustable, specify a combination type louver with the exterior louver fixed and the interior louver adjustable similar to louver above.

T. SEALANTS

1 Seal all exterior material joints and around all door and window openings with a multi-component urethane sealant with a backer rod. Joint widths to be consistent with ¼" minimum and ½" maximum joint width and finish to be uniform without breaks or variations in sealant bead. Colors as selected by Architect from standard colors to match one of the adjacent material colors. Specify sealant with a minimum of a ten (10) warranty.

END OF SECTION

TxDOT Maintenance Division
Facilities Management Section

Architectural Design Standards

Title:	**Building Interior**	**Number:**	**A1.04**
Issue Date:	**March 2009**	**Rev #:**	**0**

Approved: _____
Capital Improvements Supervisor

A. MEETING ROOM

1 Provide an exterior door and an interior door from Lobby to the Break / Meeting Room. This will eliminate need for work crews passing through Lobby.

2 Provide built in plastic laminate counter top, base and overhead cabinets with stainless steel sink. Appliances are not supplied by TxDOT, but electrical outlets will be provided for refrigerators and microwave ovens. Garage disposals and cook stoves/ovens are not allowed. Cooking exhaust fans are not required.

3 Provide marker board and tack board; provide blocking for projection screens.

B. CONFERENCE ROOM

1 Provide a small conference room for AE Offices with a window and door adjacent to public corridor.

2 Design partitions and doors to provide good acoustical speech privacy when door is closed with an NC rating of 30 (see Acoustical Design in General Requirements).

3 Specify marker board and tack board; provide blocking for future projection screen that will provided by districts.

TxDOT Maintenance Division
Facilities Management Section

Architectural Design Standards

Title: **Building Interior** **Number:** **A1.04**

Issue Date: **March 2, 2009** **Rev #:** **0**

Approved: _____
Capital Improvements Supervisor

A. MEETING ROOM

1 Provide an exterior door and an interior door from Lobby to the Break / Meeting Room. This will eliminate need for work crews passing through Lobby.

2 Provide built in plastic laminate counter top, base and overhead cabinets with stainless steel sink. Appliances are not supplied by TxDOT, but electrical outlets will be provided for refrigerators and microwave ovens. Garage disposals and cook stoves/ovens are not allowed. Cooking exhaust fans are not required.

3 Provide marker board and tack board; provide blocking for projection screens.

B. CONFERENCE ROOM

1 Provide a small conference room for AE Offices with a window and door adjacent to public corridor.

2 Design partitions and doors to provide good acoustical speech privacy when door is closed with an NC rating of 30 (see Acoustical Design in General Requirements).

3 Specify marker board and tack board; provide blocking for future projection screen that will provided by districts.

C. PRIVATE OFFICES

1 Area Engineer Office and Maintenance Office Buildings- Provide private offices for Area Engineer, Assistant Area Engineer , Maintenance Supervisor and Assistant Maintenance Supervisor. Make all offices the same size (11'-6 wide by 14'-0") unless approved by Facilities Management (FM) Director.

2 District Office- Ratio of private offices to open space will vary between District's needs and operations that will be determine by FM with district's coordination. The preliminary ratio of private offices to open office is 20% private to 80% open office, and this ratio will be finalized during the design process.

3 Design partitions and doors to provide good acoustical speech privacy when door is closed with an NC rating of 30 (see Acoustical Design in General Requirements).

D. LOBBY / RECEPTION AREA

1 Provide space for one work station for Area Engineer support staff, one work station for Maintenance Supervisor staff and waiting area for 3 visitors. Work stations to be located with direct view of the front parking and walk.

2 Provide space for filing cabinets convenient to work stations.

3 The location of fuel control and fire control panels shall be near Lobby, but out of immediate view and meeting code requirements.

E. DOORS AND FRAMES

1 Provide solid core, stain-grade red oak wood doors or accepted equal, hollow metal or aluminum frames for office type buildings. Specify hollow metal doors for utilitarian rooms like shops, equipment storage, material storage, laboratories, etc. Hollow metal doors shall be full, flush seamless, 1 ¾" thick, 18 ga. steel, factory primed and field painted. Provide vision panels for doors at public rooms (meeting rooms, stairs, etc). Hollow metal frames shall be 16 ga. steel, primed and painted with welded, mitered corners. Provide galvanized doors and frames in wet areas subject to high humidity. Comply with latest edition of the HMMA.

F. DOOR HARDWARE

1 Door hardware to be solid, stainless steel with brushed finish; all doors to include ball-bearing hinges with non-removable hinges on secured doors, lever handle with Best, 7 pin locksets with removable cores to TxDOT keying system, deadbolt, closer, hold-open device, door stop, silencers,

kick-plate as scheduled and compatible with TxDOT security card reader system.

G. WINDOWSILLS

1 Windowsills in occupied areas shall be approximately 34" – 36" above finish floor to allow building occupants to view approaching vehicles and visitors, and to avoid low modular panels blocking window opening. Coordinate height of low modular panels before establishing sill height. Use wood, plastic laminate or other durable materials for sills; do not use gypsum board on windowsills.

H. FLOOR FINISHES

1 Resilient Flooring- Specify either 12"x12" vinyl composition tile (VCT) or rubber tile with 4" rubber base for all occupied office spaces. Field form rubber base corners. Vinyl base is unacceptable. Finish with sealer or wax recommended by manufacturer.

2 Sealed Concrete- Apply clear sealer in unoccupied spaces.

3 Ceramic Tile- Specify 2x2, unglazed ceramic tile for Restrooms and Shower / Dressing Areas (See more detail in Sections L. & M below).

4 Carpeting- Specify glue-down, minimum of 50% recycled content, nylon carpet tile with low-VOC adhesives for District Headquarters only unless approved by FM Director.

I. DRYWALL (GYPSUM BOARD) PARTITIONS

1 Standard gypsum board shall be taped, floated, textured and painted and 5/8" minimum thickness.

2 High-impact and wet areas shall be impact resistant gypsum board with acrylic epoxy paint finish.

3 Paint finish for all drywall partitions shall be eggshell or low luster finish. Flat finish is prohibited since it shows marks easily and it is difficult to clean.

4 Extend drywall partitions full height to structure for security, privacy, or code as required. All other partitions to stop 6" above ceiling.

5 Vinyl covered gypsum board is prohibited for any location within the Capital Program building facilities.

J. WALL / PARTITION CONSTRUCTION

1 Perimeter Wall- Along perimeter walls of the pre-engineered, steel structural frame, of conditioned spaces, construct walls with 6" minimum metal studs at 16" o.c. with ½ exterior gypsum board on exterior face and 5/8" gypsum board on interior face, and R-19 batt insulation. Cover exterior sheathing with damp-proof, building wrap like "Tyvek" before installing metal siding or masonry veneer. Along perimeter walls of the pre-engineered, steel structural frame, with heating only or no climate control, provide standard vinyl-faced metal building insulation.

2 Perimeter metal sole plate to be set with continuous sealer between metal and concrete, either mastic or closed-cell foam strip.

3 CMU walls/partitions shall not be used in new TxDOT facilities, unless pre-approved for a specific reason (Truck Wash, existing CMU, Lab Wet Rooms, etc.).

K. PAINT

1 Water based, latex acrylic paints for typical painted finishes with a minimum of one coat of primer and two coats of latex paint.

2 Eggshell or a low luster finish for wall paint with zero VOC content and semi-gloss finish with low VOC content for painted metal finishes like doors and hollow metal door frames. Flat wall finish is unacceptable. Surfaces must be washable with soap and water.

3 Water based, epoxy latex acrylic paints with low VOC content for high impact and wet areas.

4 Clear, polyurethane finish with satin finish and low VOC for stain-grade wood finishes unless approved by PM for a different finish.

5 Special coating for painting Fuel System to meet TxDOT specification.

L. CEILINGS

1 Heights- The minimum ceiling height for all occupied spaces shall be:

a) 9'-0" for typical interior rooms

b) 10'-0" for large room like Open Office Area and Break/Meeting Room

c) 8'-0" height in small, gypsum board ceiling rooms like Store Rooms.

d) No ceiling for open to structure without ceilings in unoccupied spaces like Shops and large Storage Rooms

2 Suspended acoustical ceiling systems with 2x2, exposed two-way metal grid shall be used in typical office and occupied spaces. Specify fissured patterned, mineral or wood fiber with a minimum of 40% recycled content.

3 Special ceiling treatment is allowed only in selected areas like lobbies, special meeting rooms, etc. as approved by the FM Director.

M. RESTROOMS

1 Floors- Specify 2x2, unglazed ceramic tile on floor and coved base 4" high on all walls and epoxy grout for floors and bases only; sanded floor grout unacceptable.

2 Walls- Specify 2x2, matte glazed ceramic tile on "wet wall" containing plumbing. Install full height of wall with accent (different color) tile shall be less than 10% of entire tiled wall. Install ceramic tile on wing walls adjacent to urinals.

3 Specify all standard ceramic trim pieces; cut tile in lieu of trim pieces is unacceptable. Trim must match color of adjacent tile.

4 Specify impact resistant gypsum board with acrylic epoxy paint finish.

5 Toilet stalls shall be 3'-4" wide, center to center of partitions, except ADA stalls.

6 All toilet and urinal partitions shall be solid, 100% recycled, high-density polyethylene polymer (HDPE) plastic or phenolic with uniform color and stainless steel support brackets and anchors.

7 Provide a square, brass floor drain centered below toilet partition.

8 Specify stainless steel clothing hooks near lavatory.

9 Specify semi-recessed, stainless steel toilet accessories.

10 Good lighting at mirrors and lavatories.

N. SHOWER & DRESSING AREAS

1 Recess concrete slab 1 1/2" in Shower and Dressing Area for thick set ceramic tile if one room. If Shower is separate room, then recess only Shower slab. Specify 2x2, unglazed ceramic tile on floor and coved base 4" high on all walls and epoxy grout for floors and bases only; sanded floor grout is unacceptable.

2 Specify 2x2, matte glazed ceramic tile on full height of all walls with accent (different color) tile shall be less than 10% of entire tiled wall.

3 Provide a square, brass floor drain inside Shower and slope tile to drain.

4 Schedule moisture resistant gypsum board with acrylic epoxy paint finish.

5 Specify damp-proof, recessed lights in Shower and Dressing Area.

6 Provide shower curtains, towel and clothing hooks in Dressing Area.

O. LOCKERS & BENCHES

1 Lockers- Specify full height, 18"x18"x72" lockers; one for each employee; one ADA locker in each Dressing Room. Mount lockers on 4" raised concrete curb. Specify sheet steel, commercial quality, 16 ga., free-standing with sloped top, vented top and bottom, lockable with one shelf and clothing hooks, baked enamel paint finish.

2 Benches- Specify laminated, red oak with clear finish, 19" high pedestals of brushed chrome finish. ADA bench: 24"x 48" with four pedestals.

P. COFFEE BAR

1 All new Area Office facilities shall have a 5' coffee bar located in a corridor, or other convenient location in addition to the one in the Meeting Room.

2 Provide a plastic laminate counter finish with 4" high plastic laminate splash, base and overhead cabinets with stainless steel sink.

3 Schedule moisture resistant drywall with acrylic epoxy paint finish above counter.

Q. FIRE EXTINGUISHERS

1 Locate fire extinguishers no less than 75' apart per code in corridors.

2 Specify semi-recessed cabinets with fire extinguishers in occupied spaces.

3 Specify brackets and fire extinguishers in unoccupied spaces like Shops.

4 Specify new, 16 lb. dry chemical ABC fire extinguisher in each cabinet that is UL listed, DOT rated and complies with NFPA 10.

R. WINDOW BLINDS

1 Specify horizontal louver blinds with 1" aluminum slats with baked polyester finish, or finish to match clear, anodized aluminum window frames as selected by Architect for all windows.

S. MODULAR FURNITURE

1 General Guidelines

a) MNT does not fund or provide free standing furniture, i.e., chairs, filing cabinets, shelving, conference and meeting room furniture, etc. Existing furniture to be relocated to new facility.

b) Individual Districts / Divisions / Offices (D/D/O) are responsible for funding any modular furniture that goes into their fixed-wall offices after the construction is completed. Modular furniture cost must not exceed $25,000 or it is a capital funded asset that is approved, funded, and managed by MNT.

c) MNT budgets modular furniture funding for the biennium in which the building is completed.

d) If building completion occurs in a different biennium than when the building construction started, then a new charge number, or CIP Project Detail Number must be requested by the MNT/FM Project Manager. However, the CIP Project Number remains the same.

2 New Facilities

a) MNT funds modular furniture for open office and reception areas only.

3 Additions and Renovations

a) MNT funds modular furniture for open office areas depending on the amount of modular furniture each D/D/O has and the phasing of project.

4 Role of D/D/O and MNT/FM Project Managers (PM)

a) The D/D/O coordinates with the PM before the modular furniture vendor provides a layout and places order. If any furniture is ordered directly by D/D/O without PM approval, the furniture will not be funded by MNT.

b) The PM oversees design and agrees to a general layout for the essential components of the modular furniture with the D/D/O input.

c) The PM sends detailed layouts, component list and cost estimate to FM Equipment Relocation Coordinators (Gary Murrell and Keith Ballard) for their review and approval before ordering furniture. New furniture must be coordinated with the PM before construction starts to assure delivery is made at end of project to be connected by the General Contractor before TxDOT moves into the new facility.

END OF SECTION

PART – 2

STRUCTURAL STANDARDS
MECHANICAL STANDARDS
ELECTRICAL STANDARDS
PLUMBING STANDARDS
CIVIL STANDARDS

TxDOT Maintenance Division
Facilities Management Section
Engineering Services Branch

Structural Design Standards

TABLE OF CONTENTS

NUMBER	TITLE	ISSUE DATE	Rev. No.	Pages
S1.01	Structural Design	March 2009	0	2

TxDOT Maintenance Division
Facilities Management Section
Engineering Services Branch

Design Standard

Title: **Structural Design** **Number:** **S1.01**

Issue Date: **December 15, 2008** **Rev #:** **0**

Approved: _____
Engineering Services Supervisor

A. SPECIAL CONSIDERATIONS

1. The structural design and construction documents shall be developed in accordance with architectural drawings.

2. Value engineering methods shall be applied to develop an economical structure to meet the state requirements.

3. In design development the consideration shall be given for expansion and contraction of structural elements resulting from temperature affects.

4. Consideration shall be given for rigid frame and purlins vertical deflection when metal studs and ceiling hangers are directly attached to these elements.

5. Minimum of following notes shall be included in the construction drawings.
   a) General notes: instruction to contractor, coordination and safety requirements. b) Site preparation c) Foundations d) Reinforced Concrete E) Structural Steel f) Light Gage Steel framing g) Wood/Timber h) Masonry i) Pre-Engineered Metal Building. j) Testing requirements. Any of these items that are not used can be eliminated.

6. Structural engineer shall coordinate with MEP engineer for equipment lay out, loading and large penetrations to incorporate into structural drawings. All large openings in structural steel shall be framed including doors and windows.

7. Coordinate foundation design with Geotechnical report. Every attempt should be made to develop slab on grade with beams for foundation design, if economically feasible.

8. Provide schedule of abbreviations used in the drawings.

9. Show key plan, graphic scale and north arrow on each plan drawing.

B. STRUCTURAL CACULATIONS

1. Develop comprehensive calculations for each structural element such as foundations, floors, walls, columns, frames and roof framing. The calculation shall be self explanatory and stand alone with complete references. If a computer program is used identify it with version and revision number. The calculation should clearly show the inputs used and how lateral and gravity loads are addressed. Diaphragms, shear walls or bracings etc shall be clearly reflected in the calculation. Calculation should also show the connection design and details.

C. CODES AND STANDARDS

1. All designs shall be based on standards and recommendations made in the current edition of:

a.	IBC-2003:	International Building Code
b	AISC 9th edition for ASD:	Manual of Steel Construction
c.	ACI 318-05	Building Code Requirements For Structural Concrete
d.	NDS-2001	National Design Specifications For Wood Construction
e.	MDG-3	Masonry Designers' Guide
f.	ASTM Standards	American Society for Testing and Materials
g.	AISI Manual	American Iron and Steel Institute
h.	ASCE 7-05	Minimum Design Loads For Buildings and Other Structures

TxDOT Maintenance Division
Facilities Management Section
Engineering Services Branch

Mechanical Design Standards

TABLE OF CONTENTS

NUMBER	TITLE	ISSUE DATE	Rev. No.	Pages
M1.01	General Mechanical	March 2009	0	3
M2.01	HVAC Systems	March 2009	1	3
M2.02	HVAC Ductwork	March 2009	3	2
M2.03	HVAC Insulation	March 2009	2	2
M2.04	HVAC Ventilation	March 2009	2	2
M2.05	HVAC Testing, Adjusting and Balancing	March 2009	2	1
M2.06	HVAC Plumbing	March 2009	1	1
M2.07	HVAC Controls	March 2009	1	1

TxDOT Maintenance Division
Facilities Management Section
Engineering Services Branch

Design Standard

Title: General Mechanical **Number:** M1.01

Issue Date: March 2009 **Rev #:** 0

Approved: _____
Engineering Services Supervisor

A. CODES AND STANDARDS

1. Mechanical designs, specifications and equipment selections shall conform to the current edition of ASHRAE/ANSI/IES Standard 90.1, "Energy Standard for Buildings Except Low-Rise Residential Buildings." The Engineer shall also submit certification of compliance and documentation as required by the State Energy Conservation Office (SECO) for submission to TxDOT.

2. All designs shall be based on standards and recommendations made in the current editions of:

   a. International Building Code

   b. Uniform Mechanical Code

   c. Uniform Plumbing Code

   d. American Society of Heating Refrigeration and Airconditioning Engineers (ASHRAE) Handbooks and Standards

   e. American Conference of Governmental Industrial Hygienists (ACGIH) "Manual of Recommended Practice" for Industrial Ventilation

   f. American Society of Mechanical Engineers (ASME) Standards

   g. American National Standards Institute (ANSI) Standards

   h. American Refrigeration Institute (ARI) Standards

B. QUALITY ASSURANCE

1. The Mechanical Contractor shall be required to be licensed either by the

State of Texas, or by the local jurisdiction, whichever is appropriate to their area of expertise.

a. All HVAC work shall be performed by an air conditioning contractor holding a current Class A or B air conditioning license as issued by the Texas Department of Licensing and Regulation.

b. The contractor shall provide evidence of required licensing including expiration dates when so requested by the State's Representative.

2. All workers shall be required to be thoroughly experienced in the particular class of work for which they are employed.

3. All work performed by the Contractor shall be professional in design, equipment selection and installation.

C. SUBSTITUTIONS

1. Substitutions, unless a sole source manufacturer is justified and approved by TxDOT in writing, shall be allowed for materials or equipment for which the performance, capacity and quality are equal to that scheduled or specified. Use the terms, "or approved equal," and include on the drawings and in the specifications the following paragraphs:

   a. "It is the intent of the Drawings and/or Specifications neither to limit products to any particular manufacturer nor to discriminate against an APPROVED EQUAL product as produced by another manufacturer. Some proprietary products may be mentioned to set a definite standard for acceptance and to serve as a reference in comparison with other products. On the other hand, when a manufacturer's name appears in these Specifications or in the Drawings, it shall not be interpreted that the manufacturer is unconditionally acceptable as a provider of equipment for this project. The successful manufacturer or supplier shall meet all of the provisions of the appropriate specification(s).

   b. "The specified products have been used in preparing the Drawings and Specifications and thus establish minimum qualities with which substitutes must be at least equal to be considered acceptable. The burden of proof of equality rests with the Contractor. The decision of the Engineer is final.

   c. "In the event that the Contractor submits a proposal for a substitution, and the review and negotiation of the substitution (if handled in a timely, expedited manner) results in a delay of the contract work, then a reasonable extension of time for the contract may be allowed."

2. Substitutions or deviations shall only be made by specific request by the Contractor. The Uniform General Conditions also require that the Contractor make written requests for "specific deviations" from the Construction Documents.

3. It should also be noted that deviations from the Contract Documents will not be allowed in the submittal process. If deviations are included in submittals, but not specifically noted, then the deviation will not be allowed, even if the submittal is noted "without exceptions."

D. ROOF PENETRATIONS

1. Equipment curbs, if used, shall be supplied by the Mechanical Contractor, and installed by the Roofing Contractor. The number and size of roof penetrations shall be minimized.

E. TRENCHING

1. All underground piping systems shall be buried a minimum of 24 inches deep and bedded in a minimum of 2 inches of clean sand, above, below, and on all sides.

2. If trenching across existing pavement, contact project manager about whether to allow open trenching or require boring under pavement.

3. In all cases, when installing piping under paved traffic areas, sleeves shall be provided to allow for future replacement of the piping system. Sleeve sizes shall be a minimum of two nominal pipe sizes larger than the pipe, or 6 inches, whichever is greater. Sleeves shall be Schedule 80 PVC, C-900 PVC, or piping of comparable strength to withstand anticipated traffic and shall extend approximately 4 feet beyond the pavement on both sides.

4. Specifications shall contain a requirement for a contractor-provided Trenching Plan, sealed by a Civil Engineer, for trenches deeper than five feet.

F. PROHIBITION OF ASBESTOS

1. Include in the project specifications a section detailing the prohibition of materials and equipment containing any form of asbestos. Also require a certification from the Contractor. A sample specification section (with blank affidavit form attached) is available upon request.

TxDOT Maintenance Division
Facilities Management Section
Engineering Services Branch

Design Standard

Title: **HVAC Systems** **Number:** **M2.01**

Issue Date: **March 2009** **Rev #:** **1**

Approved: _____
Engineering Services Supervisor

A. SPECIAL CONSIDERATIONS

1. Most TxDOT offices are also in areas where the availability of contractors is limited. It has proven to be successful to restrict HVAC system design considerations to unitary and/or self contained equipment.

2. Every attempt should be made to limit the size of heating and cooling equipment to a nominal 5 tons. It will also be necessary, due to the likely unavailability of natural gas, to use heat pumps.

3. It is preferred that heat pump equipment provide back up electric heat in all locations.

B. HVAC SYSTEM DESIGN CRITERIA

1. All system designs and equipment selections shall comply with the current Texas State Energy Standard. Currently, this standard is the ASHRAE/ANSI Standard 90.1-2004.

2. HVAC cooling and heating system designs shall be based on the criteria recommended in the current edition of the ASHRAE Handbook of Fundamentals for the location (or a representative location) of the project site, and all calculations shall follow the recommended procedures given. Climatic data used shall be for 99.6% Heating Dry Bulb and 0.4% Cooling Dry Bulb/Mean Wet Bulb.

3. Acceptable ranges of temperature and humidity control shall be compatible with the zones shown in Figure 5, page 8.12 of the 2005 ASHRAE Handbook of Fundamentals, "ASHRAE Summer and Winter Comfort Zones."

4. Ventilation design shall conform to the current edition (with all current addenda) of ASHRAE Standard 62.1, "Ventilation for Acceptable Indoor Air

Quality."

C. EQUIPMENT MANUFACTURERS

1. For small commercial equipment (5 tons or less) such as split DX or heat pump with gas or electric-backup heat, the following manufacturers are considered acceptable: Lennox, Carrier, and Trane.

2. For large commercial equipment the following have been found to be acceptable:

   a. Air handlers: Lennox, Trane, Temtrol, Thermal, and Marcraft.

   b. Chillers: Trane, Carrier, and York.

D. EQUIPMENT AND SYSTEMS

1. Note comments on "Special Considerations" above.

2. System designs for offices shall be based primarily on horizontal, split systems. Locate equipment above ceilings in close proximity to the zone served for a minimum length of ductwork. Unit shall be installed high enough for sufficient headroom for ease of maintenance, but low enough to ensure ease of access. (Note that a detail is provided for specific requirements.)

3. All horizontal cooling units shall be installed with overflow pans with a float micro switch to disable the unit in the event the pan fills with water. The pan shall also be installed with a capped drain.

4. In general, air conditioning units and systems should be limited to a maximum of nominal 5 ton cooling capacity, keeping the supply air flow below 2000 cfm. (This will avoid the code requirement to install duct mounted smoke detectors and related fire alarm controls.) **Note that the "twinning" of units is not acceptable.**

5. Air conditioning equipment shall be sized and selected to accommodate published sensible/total cooling ratios required by the zone loads. Specifications shall require that systems be matched, performance-rated equipment.

6. All unitary systems and equipment shall be required to be certified in accordance with ARI Standard 210/240, rated in accordance with ARI Standard 270, and listed by Underwriters Laboratories (UL). Equipment shall bear the seal of ARI for unitary equipment, as well as the UL seal.

7. When applying unitary packaged or split system equipment, special care shall be taken not to exceed the allowable external static pressure (ESP) for the equipment, as published by the equipment manufacturer.

8. Provide a dedicated, "ductless" split system for Data/Com ("Hub") Rooms, to provide cooling only. The units shall be selected to accommodate the high sensible cooling loads.

9. All condensate lines shall be rigid, hard drawn, Type "K" copper, fully insulated with closed-cell foam type insulation (Armaflex or approved equal).

10. In shop and equipment buildings, only ventilation shall be provided, except that tube type radiant heat shall be provided for vehicle shop areas, only. The only exceptions shall be office areas and special purpose areas, individually designated for specific environmental control. Office areas shall be considered the same as in office buildings.

E. WARRANTY:

1. The specifications shall require that the Contractor shall guarantee all installed equipment, material, and work against any defects in material or workmanship and shall satisfactorily correct, at no cost to the State, any such defect that may become apparent within a period of one year after completion of the installation. The warranty period shall commence on the date of acceptance of the contract by the State. A manufacturer's 5 year compressor warranty shall be required for all sizes of unitary and self-contained direct expansion equipment. Insurance policies shall not acceptable.

TxDOT Maintenance Division
Facilities Management Section
Engineering Services Branch

Design Standard

Title: **HVAC Ductwork** **Number:** **M2.02**

Issue Date: **March 2009** **Rev #:** **3**

Approved: _____
Engineering Services Supervisor

A. DUCTWORK

1. Ductwork systems designed for supply, return, and exhaust systems shall minimize static loss and shall accommodate the available static from the air handler, furnace or fan. The total static loss shall be calculated or simulated by computer program. The results of the calculation or simulation shall be available for review on request.

2. Air Conditioning supply ductwork shall be minimum 26 gauge galvanized sheetmetal construction, constructed and installed to a SMACNA 2" rating.

3. Furnish splitter dampers and turning vanes at all tee connections.

4. Furnish single thickness turning vanes at all 90° elbows.

5. Furnish manufactured taps with raised regulator volume dampers.

6. Design systems with runouts of externally insulated round metal duct and connect diffusers using flexible metal duct (maximum 4'-0" in length).

7. The lengths of duct runs shall be minimized in consideration of the ability of the unitary equipment to develop limited static pressure. Ductwork shall be sized to reduce static loss and generated noise in the system(s).

8. Duct sealant shall be water based latex type. Solvent based duct sealants shall be prohibited.

9. Fabricate and support ductwork in accordance with SMACNA duct construction standards.

10. Flexible duct (flex duct), if used, shall be plenum rated, Flexmaster TL-V "or approved equal," constructed of round, flexible expanded aluminum, insulated with fiberglass blanket, and protected with a reinforced metalized outer jacket. Maximum thermal conductance of the insulation shall be 0.23. The flexible aluminum duct shall be secured and sealed to the adjoining sheet metal duct using sheetmetal screws and duct sealant. All materials shall be installed as recommended by the manufacturer. Flame spread/smoke developed ratings shall be equal to or less than 25/50 respectively. Lengths of flex duct runs shall be limited to 48 inches in each application.

11. Ceiling supply air diffusers shall be louvered, pattern type. **Neither perforated nor linear diffusers nor returns shall be used on TxDOT projects without specific approval**. All diffusers shall be all aluminum construction with a baked coating to match the surrounding construction, or as specified by the Architect. Extruded aluminum is preferred. Each device may include an OBD, but it SHALL NOT be used for balancing, except under special, pre-approved circumstances. All supply diffusers and outside air grilles shall be insulated externally.

12. Ceiling return air grilles may be either pattern type, or egg-crate. ("Egg-crate" is preferred.) All grilles shall be all aluminum construction with a baked coating to match the surrounding construction, or as specified by the Architect. Extruded aluminum is preferred. It shall be required that the interior of the duct shall be painted flat black insofar as it is visible from the occupied space. **Neither perforated nor linear return air grilles shall be used on TxDOT projects without specific approval.**

13. Sidewall supply and return grilles shall be vertical bar type and shall include integral opposed blade dampers. All grilles shall be all aluminum construction with a baked coating to match the surrounding construction, or as specified by the Architect. Extruded aluminum is preferred.

14. All air devices shall be commercial quality, NOT residential.

15. The drawings shall indicate a volume damper for each diffuser drop, at the point of tap from the main ("trunk") supply duct. All volume dampers shall consist of raised-regulator type, insulated under the regulator.

TxDOT Maintenance Division
Facilities Management Section
Engineering Services Branch

Design Standard

Title: **HVAC Insulation** **Number:** **M2.03**

Issue Date: **March 2009** **Rev #:** **2**

Approved: _____
Engineering Services Supervisor

A. INSULATION

1. All insulation shall be applied by mechanics skilled in the installation of insulation and regularly engaged in such occupation.

2. All adhesives, mastics, sealers, etc., utilized in the fabrication of these systems shall meet NFPA and UL requirements for fire resistant ratings (maximum of 25 flame spread, 10 fuel contribution, and 50 smoke developed ratings, when tested to NFPA 255 standards), shall carry a UL label on each container and/or package, and shall be approved by the insulation manufacturer for guaranteed performances when incorporated into their insulation system. Certificates to this effect shall be submitted along with the Company's submittal prior to installation. All surfaces to be insulated shall be clean and dry before applying insulation.

3. All supply, return, and outside air ducts shall be externally insulated with Owens-Corning, Knauf, Johns Manville, or approved equal, minimum 1.0 pcf (pounds per cubic foot), 1-1/2" thick all service blanket type, commercial grade, flexible glass fiber insulation with Kraft vapor barrier facing. Installed R value of insulation shall be minimum 4.5. Internally insulated ductwork shall be avoided. Specifications shall stipulate that all seams shall be sealed.

4. All specified insulation shall be applied by mechanics skilled in this particular work and regularly engaged in such occupation.

5. All surfaces to be insulated shall be clean and dry before applying the insulation.

6. All heating hot water and chilled water piping shall be insulated with 1-1/2" thick polyurethane closed cell pipe insulation complete with all service jacket (ASJ) vapor barrier. Fittings shall be insulated with the same thickness as the pipe insulation and covered with PVC molded insulation covers with complete

vapor seal. ASJ vapor barrier laps shall be stapled and sealed with approved vapor barrier mastic and/or adhesives.

7. The contractor shall provide an isolating vapor seal between the pipe insulation jacket and the pipe at all butt joints, fittings, flanges, valves and hangers.

8. Valves and flanges shall be insulated with mitered polyurethane covers and vapor sealed.

9. Minimum sixteen (16) gauge galvanized metal insulation saddles, 18 inches long, shall be used at all hangers and points of support.

10. Refrigerant liquid and suction lines shall be insulated with a minimum of 1/2" closed cell Armaflex insulation or approved equal.

TxDOT Maintenance Division
Facilities Management Section
Engineering Services Branch

Design Standard

Title: **HVAC Ventilation** **Number:** **M2.04**

Issue Date: **March 2009** **Rev #:** **2**

Approved: _____
Engineering Services Supervisor

A. OFFICE BUILDING VENTILATION

1. Do not return air from restrooms where the unit serves other areas in the building. The minimum exhaust from restrooms shall be as recommended in the current version of ASHRAE Standard 62.1. The area immediately in front of shower stall(s), and immediately above the farthest water closet shall be exhausted.

2. Conditioned air shall be supplied to restrooms and shower rooms in the area of the lavatories, close to the entrances to the rooms.

3. Power to exhaust fan(s) shall be switched with the lighting in the restroom or shower room. Exhaust fans shall be roof mounted and shall be as manufactured by Greenheck, Cook, or ACME.

B. SHOP BUILDING VENTILATION

1. Ventilation from rooms and areas in Shop Buildings shall be as recommended in the current version of ASHRAE 62.1. Ventilation fans shall be located on the roof of the building.

2. In Shop and Equipment Buildings where required, exhaust for LPG alarm or emergencies shall be installed in the rear wall, at 18 to 24 inches above finished floor to the bottom of the exhaust opening. This type of ventilation shall be exclusive and redundant to the required building ventilation system(s) and shall be controlled by the LPG detection system(s).

3. Openings in walls and roofs for exhaust/ventilation fans shall be of a minimum size required for the air being exhausted.

4. All exhaust fans shall be installed with gravity or motorized backdraft dampers. Motorized dampers shall only be employed where absolutely

necessary. Dampers shall be installed in fabricated collars extended from the roof or wall penetration and covered with birdscreen (1/4" by 1/4") mesh.

5. Outside air louvers shall be installed to accommodate the exhaust/ventilation fans. Louvers shall be sized to provide for the total flow of all fans operating simultaneously. All louvers shall be designed to incorporate gravity backdraft dampers. Motorized dampers shall be used only when required for the proper operation of the system(s).

TxDOT Maintenance Division
Facilities Management Section
Engineering Services Branch

Design Standard

Title: **HVAC Testing, Adjusting and Balancing** **Number:** **M2.05**

Issue Date: **March 2009** **Rev #:** **2**

Approved: _____
Engineering Services Supervisor

A. TESTING, ADJUSTING AND BALANCING

1. An independent TAB firm, employed by the Contractor, shall perform Testing, Adjusting and Balancing (TAB) of all HVAC systems over 500 cfm total airflow. The TAB firm shall be certified by NEBB, AABC, or both. Full compliance with NEBB or AABC Standards shall be required.

2. The Contractor shall make all necessary adjustments to assure proper balance of air within the limits recommended in AABC National Standards. Refer to Chapter 16, Figure 16.1, and Chapter 20. A final TAB report shall be submitted using NEBB or AABC recommended forms. Final payment shall not be approved prior to receipt and approval of this drawing and report by the engineer of record and the state's engineer.

3. The measurement and verification of building conditions by the final test and air balance report shall be based on the engineer's design, as documented in the construction plans and specifications.

TxDOT Maintenance Division
Facilities Management Section
Engineering Services Branch

Design Standard

Title: HVAC Plumbing **Number:** M2.06

Issue Date: March 2009 **Rev #:** 1

Approved: _____
Engineering Services Supervisor

A. HVAC Plumbing:

1. Refrigerant line sizes shall be selected to optimize performance of the equipment and to maintain the published seasonal efficiency ratings (SEER or EER) of the manufacturer. The sizing of the line sets shall incorporate the length of the line set as well as the capacity of the system. All refrigerant piping shall be sized and installed as recommended by the manufacturer of the equipment.

2. Condensate lines shall be rigid, hard drawn, Type K copper, insulated with 1/2" Armaflex (or approved equal) closed cell insulation, including the trap and vent, installed in accordance with the manufacturer's published recommendations.

3. Condensate drains shall terminate at the nearest floor drain, mop sink or service sink. (Never hard-connect to sanitary drain. Always provide an air gap.)

4. Secondary or "overflow" drains shall be piped to an obvious location, over a sink, shower, or drain, but shall not drain to a location where damage to the building or furnishings is possible.

TxDOT Maintenance Division
Facilities Management Section
Engineering Services Branch

Design Standard

Title: **HVAC Controls** **Number:** **M2.07**

Issue Date: **March 2009** **Rev #:** **1**

Approved: _____
Engineering Services Supervisor

A. HVAC Controls:

1. Where a campus wide EMCS (Energy Management and Control System) exists, all controls shall be direct digital, specified to interface with the existing system, or to a new central EMCS (if a new campus).

2. For stand-alone office and shop (non-public) buildings, install commercial programmable thermostats, without guard.

3. All HVAC controls in public buildings (e.g. Safety Rest Areas) shall be programmable thermostats with vandal resistant covers on accessible thermostats in public areas. An option available to the designer is to provide remote sensors mounted in return air ducts, with the temperature control located remotely in mechanical room(s).

4. Thermostats (or zone temperature sensors) shall be located within the zone being air conditioned in the interior of the building, away from outside walls. The preferred location is close to the return air grille serving the zone.

TxDOT Maintenance Division
Facilities Management Section
Engineering Services Branch

Electrical Design Standards

TABLE OF CONTENTS

NUMBER	TITLE	ISSUE DATE	Rev. No.	Pages
E1.01	General Electrical	March 2009	0	2
E1.02	Electrical Distribution System	March 2009	1	3
E1.03	Emergency Generators	March 2009	2	1
E1.04	Lighting	March 2009	1	2
E1.05	Gas Monitoring System	March 2009	1	2

TxDOT Maintenance Division
Facilities Management Section
Engineering Services Branch

Design Guide

Title: **General Electrical** **Number: E1.01**

Issue Date: March 2009 **Rev #: 0**

Approved: _____
Engineering Services Supervisor

A. All designs and construction shall follow the most current editions of:
   1. Texas Board of Professional Engineers (TBPE)
      a. Projects must comply with statutes that regulate professional design services for engineers. Refer to the appropriate regulatory agency to verify current requirements when professional design services are required. Reference Texas Occupation Code 1001.053.
   2. State of Texas Energy Standard for Buildings (ANSI/ASHRAE/IENSA 90.1)
   3. National Electric Code.
   4. NFPA Standards
   5. IES Standards

B. Quality Assurance
   1. All electrical work shall be performed by an electrician holding at least a current Journeyman Electrician License under the general supervision of an electrician holding a Masters Electrician License.
      a. The contractor shall provide evidence of required licensing including expiration dates when so requested by the State's Representative
      b. All workers shall be required to be thoroughly experienced in the particular class of work for which they are employed.
   2. All work performed by the Contractor shall be professional in design, equipment selection and installation.

3. Electrical equipment shall be Underwriters Laboratory (UL) listed and comply with UL standards in all cases where UL has published lists and standards applicable to type of equipment to be provided.

C. SUBSTITUTIONS

1. Substitutions, unless a sole source manufacturer is justified and approved by TxDOT in writing, shall be allowed for materials or equipment for which the performance, capacity and quality are equal to that scheduled or specified. Use the terms, "or approved equal," and include on the drawings and in the specifications the following paragraphs:

   a. "It is the intent of the Drawings and/or Specifications neither to limit products to any particular manufacturer nor to discriminate against an APPROVED EQUAL product as produced by another manufacturer. Some proprietary products may be mentioned to set a definite standard for acceptance and to serve as a reference in comparison with other products. On the other hand, when a manufacturer's name appears in these Specifications or in the Drawings, it shall not be interpreted that the manufacturer is unconditionally acceptable as a provider of equipment for this project. The successful manufacturer or supplier shall meet all of the provisions of the appropriate specification(s).

   b. "The specified products have been used in preparing the Drawings and Specifications and thus establish minimum qualities with which substitutes must be at least equal to be considered acceptable. The burden of proof of equality rests with the Contractor. The decision of the Engineer is final.

   c. "In the event that the Contractor submits a proposal for a substitution, and the review and negotiation of the substitution (if handled in a timely, expedited manner) results in a delay of the contract work, then a reasonable extension of time for the contract may be allowed."

2. Substitutions or deviations shall only be made by specific request by the Contractor. The Uniform General Conditions also require that the Contractor make written requests for "specific deviations" from the Construction Documents.

3. It should also be noted that deviations from the Contract Documents will not be allowed in the submittal process. If deviations are included in submittals, but not specifically noted, then the deviation will not be allowed, even if the submittal is noted "without exceptions."

D. PROHIBITION OF ASBESTOS

1. Include in the project specifications a section detailing the prohibition of materials and equipment containing any form of asbestos. Also require a certification from the Contractor. A sample specification section (with blank affidavit form attached) is available upon request.

TxDOT Maintenance Division
Facilities Management Section
Engineering Services Branch

Design Standard

Title: **Electrical Distribution System** **Number: E1.02**

Issue Date: **March 2009** **Rev #: 1**

Approved: _____
Engineering Services Supervisor

A. RACEWAYS

1. Minimum conduit size shall be 3/4".
2. Minimum Underground Raceway Size: 1" unless otherwise specified.
3. Conduit type shall be per the following:
   a. All interior wiring shall be run in steel conduit, concealed in finished areas. Conduit 2" and smaller shall be EMT with compression fittings. Set screw type connectors are not allowed. Conduit larger than 2" shall be rigid, hot-dip galvanized steel (RGS) with screwed connectors and fittings.
   b. All conduit installed on building exterior, in wet locations, in crawl spaces, and on roofs shall be RGS with screwed connectors and fittings.
   c. Underground conduit shall be shall be Schedule 40 PVC or RGS double wrapped with 3M #35 electrical tape. Transition from PVC shall be made underground and all elbows to risers shall be RGS.

3 All flexible metal conduit to motors and in wet locations shall be liquid tight.

4 A separate ground conductor shall be run in each raceway.

B. ELECTRICAL CONDUCTORS

1. All wiring shall be in a raceway and shall be THHN or THWN copper conductors.
2. Minimum conductor size shall be #12.
3. Conductors #10 and smaller shall be solid. #8 and larger shall be stranded.

4. Conductors shall be color coded as follows:
   a. For wire sizes 10 AWG and smaller, install wire colors in accordance with the following:
      1) Black, red, and blue for circuits at 120/208 volts single or three phase, wye systems.
      2) Purple, brown, and yellow for circuits at 277/480 volts single or three phase, wye systems.
      3) Black for "A" leg and red for "B" leg for circuits at 120/240 volts single phase.
      4) Black and red for the non-hi-leg phases and orange for the hi-leg phase for circuits at 120/240 volts three phase, open-delta.
      5) Three-way and four-way switch travelers shall be purple or lavender. Switch leg conductors shall be color coded different from the traveler conductors and the phase conductors of the system. The color used for switch leg conductors shall be the same throughout the project. The color used for traveler conductors shall be the same throughout the project.
   b. For wire sizes 8 AWG and larger, identify wire with colored tape at terminals, splices and boxes. Colors are as follows:
      1) Black, red, and blue for circuits at 120/208 volts single or three phase, wye system.
      2) Purple, brown, and yellow for circuits at 277/480 volts single or three phase, wye system.
      3) Black for "A" leg and red for "B" leg for circuits at 120/240 volts single phase.
      4) Black and red for the non-hi-leg phases and orange for the hi-leg phase for circuits at 120/240 volts three phase, open-delta.
   c. Neutral Conductors: White or gray per NEC. When two neutral conductors are routed in one conduit, install one white conductor and one gray conductor and identify each with the proper circuit number. When two or more neutrals are located in one conduit, individually identify each with proper circuit number, or use gray wire for one or more of the neutrals.
   d. Branch Circuit Conductors: Install three or four wire home runs with each phase uniquely color coded per Part A above.
   e. Feeder Circuit Conductors: Uniquely color code each phase per above.
   f. Ground Conductors:
      1) For 6 AWG and smaller: Green.
      2) For 4 AWG and larger: Identify with green tape at both ends and visible points including junction boxes.
   g. Acceptable manufacturers are: Diamond Wire & Cable Co., Essex Group Inc., and General Cable Co.

C. PANEL BOARDS

1. All panel boards shall utilize copper bus and shall include a ground bus. An isolated ground bus shall be installed where required.

2. All breakers shall be bolt-on type.

3. Interrupting current shall be as required for the installation. However, any service entrance panel shall not be rated less than 22,000 AIC. Full ratings shall be used instead of series rated.

4. Interior panel boards shall be NEMA 1 and exterior panel boards shall be NEMA 3R.

5. Acceptable manufacturers are: Square D, General Electric, and Cutler Hammer.

D. DISCONNECT SWITCHES

1. Disconnect switches shall be heavy-duty type and provided as required by NEC.

2. Interior disconnect switches shall be NEMA 1 and exterior shall be NEMA 3R.

3. Acceptable manufacturers are: Square D, General Electric, and Cutler Hammer.

TxDOT Maintenance Division
Facilities Management Section
Engineering Services Branch

Design Standard

Title: **Emergency Generators** **Number:** **E1.03**

Issue Date: **March 2009** **Rev #:** **2**

Approved: _____
Engineering Services Supervisor

An Emergency Generator shall be provided to serve essential loads.

The Emergency Generator shall be fueled by diesel or natural gas if it is available at the site.

The loads to be served by the Emergency Generator are:

- Lights and receptacles in the Reception area.
- Lights and receptacles in one set of rest rooms close to the Reception area.
- Lights, HVAC and receptacles in Telephone/Data room.
- Lights and receptacles in Electrical room.
- Lights, HVAC, and receptacles in Radio room.
- Fueling systems including gasoline, diesel, and propane.
- Essential Hallway lights to allow use of Reception area.

For the typical installation, the Emergency Generator should not be larger than 20 kW.

Any exceptions to this guide require approval by the Engineering Services Supervisor. All requests for exceptions and approvals must be in writing.

TxDOT Maintenance Division
Facilities Management Section
Engineering Services Branch

Design Standard

Title: **Lighting** **Number:** **E1.04**

Issue Date: **March 2009** **Rev #:** **1**

Approved: _____
Engineering Services Supervisor

The following lighting guidelines apply:

1. The following are suggested lighting levels (30 inches above floor) and may be revised as per consultant's recommendations:

Area	Foot-candle level
Office	50
Restroom	35
Chase	10
Shop General	30
Storage	20
Equipment Storage	10
Parking Areas	2

2. Lay-in fluorescent fixtures shall be prismatic lensed (0.125), specification grade fixtures with electronic ballasts and F32T8 lamps. Lithonia Type 2SP8 or equal.

3. Wall mounted restroom fixtures shall be Lithonia Type WP or equal with electronic ballasts and F32T8 lamps.

4. Exterior mounted wall pack fixtures shall be Lithonia Type TWH or equal with

metal halide lamp. Color shall be coordinated with Architect.

5. Parking area and drive lights shall be Lithonia Type KSF or equal with metal halide lamp mounted on Lithonia Type RTS pole. Color shall be coordinated with Architect. In coastal and other corrosive environments, round tapered fiberglass poles shall be used.

6. Lighting for TxDOT sign shall be ground mounted Lithonia Type TFL or equal with metal halide lamp. Color shall be dark bronze.

7. The electronic ballasts shall have rapid start lamp ignition and incorporate electronic circuitry to cut off lamp cathode heat after lamps are ignited. The ballasts shall operate the lamps at 60 Hz and provide full rated 20,000-hour lamp life. The ballasts shall not contain secondary filament transformer. Line current total harmonic distortion shall not exceed ten percent. The lamp current crest factor shall not exceed 1.4. The minimum and maximum ballast factors shall be 0.85 and 0.925 respectively. For all ballasts, recommended manufacturers are Lithonia, Magnetek, Motorola, Advance, or approved equal.

8. Fluorescent lamps shall be F32T8 lamps. The lamps shall have a full rated 20,000-hour operating life. The operating temperature shall be 3500K with a color rendering index not less than 85. The lamps shall have an initial output of not less than 2,850 lumens.

9. Acceptable fixture manufacturers are: Lithonia, Columbia, General Electric, Hubbell, or approved equals.

Any exceptions to this guide require approval by the Engineering Services Supervisor. All requests for exceptions and approvals must be in writing.

TxDOT Maintenance Division
Facilities Management Section
Engineering Services Branch

Design Standard

Title: **Gas Monitoring System** **Number:** **E1.05**

Issue Date: **March 2009** **Rev #:** **1**

Approved: _____
Engineering Services Supervisor

The following gas monitoring guidelines apply:

A. A Gas Monitoring System (GMS) shall be provided in the vehicle maintenance shop only. Storage areas do not have a GMS.

B. The GMS shall operate as stand alone system(s). The monitors shall be engineered to continuously monitor for the presence of propane gas. When gas concentration surpasses the preset limit in any sensor module in a zone, audible alarm indication and relays shall be activated for that particular zone. Sensor reaction shall be instantaneous; however alarms shall be capable of being delayed dependent on user preference, and dedicated flashing warning lights for visual indication and low mounted side wall exhaust fans for propane gas evacuation shall be immediately activated.

C. GMS shall be installed in accordance with manufacturer's instructions, NFPA 58, local codes, the National Electric Code (NEC) and the engineering Drawing.

D. Monitor – Bottom of monitor panel shall be mounted on wall 48" above floor.

E. Sensors – Shall be mounted on wall 18" above floor. All wiring shall be run in conduit with no exposed wiring.

F. Strobe Warning Light – Shall be mounted on wall 10 feet above floor. All wiring shall be run in conduit with no exposed wiring.

G. Alarm Annunciators – Shall be mounted on wall 10 feet above floor (or just below ceiling in office areas). All wiring shall be run in conduit with no exposed

wiring.

H. Side wall exhaust fans shall be wired into the GMS and set to activate set upon detection of LP gas. .

I. Acceptable manufacturers: Armstrong Monitoring Corporation, BW Technologies, Enmet Corporation, Thermo Gas Tech, Rel-Tek Corporation , or approved equal.

Any exceptions to this guide require approval by the Engineering Services Supervisor. All requests for exceptions and approvals must be in writing.

TxDOT Maintenance Division
Facilities Management Section
Engineering Services Branch

Plumbing Design Standards

TABLE OF CONTENTS

NUMBER	TITLE	ISSUE DATE	Rev. No.	Pages
P1.01	General Plumbing	March 2009	0	3
P2.01	Water Plumbing Systems	March 2009	3	3
P2.02	Sanitary Plumbing Systems	March 2009	1	1
P2.03	Exterior Plumbing Systems	March 2009	1	1
P2.04	Fuel Gas Plumbing Systems	March 2009	1	1
P2.05	Compressed Air Plumbing Systems	March 2009	1	1
P2.06	Grease and Oil Plumbing Systems	March 2009	1	1

TxDOT Maintenance Division
Facilities Management Section
Engineering Services Branch

Design Standard

Title: General Plumbing **Number:** P1.01

Issue Date: March 2009 **Rev #:** 0

Approved: _____
Engineering Services Supervisor

A. CODES AND STANDARDS

1. Plumbing designs, specifications and equipment selections shall conform to the current edition of ASHRAE/ANSI/IES Standard 90.1, "Energy Standard for Buildings Except Low-Rise Residential Buildings." The Engineer shall also submit certification of compliance and documentation as required by the State Energy Conservation Office (SECO) for submission to TxDOT.

2. All designs shall be based on standards and recommendations made in the current editions of:

   a. Texas Board of Professional Engineers (TBPE)

      1) Projects must comply with statutes that regulate professional design services for engineers. Refer to the appropriate regulatory agency to verify current requirements when professional design services are required. Reference Texas Occupation Code 1001.053.

   b. International Building Code

   c. Uniform Plumbing Code

   d. American Society of Plumbing Engineers (ASPE) Data Books

   e. American Society of Mechanical Engineers (ASME) Standards

   f. American National Standards Institute (ANSI) Standards

B. QUALITY ASSURANCE

1. The Plumbing Contractor shall be required to be licensed either by the State of Texas, or by the local jurisdiction, whichever is appropriate to their area of expertise.

a. All plumbing work shall be performed by a firm holding a valid Master Plumber License issued by the Texas State Board of Plumbing Examiners (TSBPE). Employees performing the work shall have a valid Journeyman Plumber license issued by TSBPE.

b. The contractor shall provide evidence of required licensing including expiration dates when so requested by the State's Representative.

2. All workers shall be required to be thoroughly experienced in the particular class of work for which they are employed.

3. All work performed by the Contractor shall be professional in design, equipment selection and installation.

C. SUBSTITUTIONS

1. Substitutions, unless a sole source manufacturer is justified and approved by TxDOT in writing, shall be allowed for materials or equipment for which the performance, capacity and quality are equal to that scheduled or specified. Use the terms, "or approved equal," and include on the drawings and in the specifications the following paragraphs:

   a. "It is the intent of the Drawings and/or Specifications neither to limit products to any particular manufacturer nor to discriminate against an APPROVED EQUAL product as produced by another manufacturer. Some proprietary products may be mentioned to set a definite standard for acceptance and to serve as a reference in comparison with other products. On the other hand, when a manufacturer's name appears in these Specifications or in the Drawings, it shall not be interpreted that the manufacturer is unconditionally acceptable as a provider of equipment for this project. The successful manufacturer or supplier shall meet all of the provisions of the appropriate specification(s).

   b. "The specified products have been used in preparing the Drawings and Specifications and thus establish minimum qualities with which substitutes must be at least equal to be considered acceptable. The burden of proof of equality rests with the Contractor. The decision of the Engineer is final.

   c. "In the event that the Contractor submits a proposal for a substitution, and the review and negotiation of the substitution (if handled in a timely, expedited manner) results in a delay of the contract work, then a reasonable extension of time for the contract may be allowed."

2. Substitutions or deviations shall only be made by <u>specific request</u> by the Contractor. The Uniform General Conditions also require that the Contractor make written requests for "specific deviations" from the Construction Documents.

3. It should also be noted that deviations from the Contract Documents will not

be allowed in the submittal process. If deviations are included in submittals, but not specifically noted, then the deviation will not be allowed, even if the submittal is noted "without exceptions."

D. ROOF PENETRATIONS

1. The Roofing Contractor shall also provide, install, flash and seal all penetrations for sanitary vents indicated in the plumbing plans.

2. The number and size of roof penetrations shall be minimized.

E. TRENCHING

1. All underground piping systems shall be buried a minimum of 24 inches deep and bedded in a minimum of 2 inches of clean sand, above, below, and on all sides.

2. If trenching across existing pavement, contact project manager about whether to allow open trenching or require boring under pavement.

3. In all cases, when installing piping under paved traffic areas, sleeves shall be provided to allow for future replacement of the piping system. Sleeve sizes shall be a minimum of two nominal pipe sizes larger than the pipe, or 6 inches, whichever is greater. Sleeves shall be Schedule 80 PVC, C-900 PVC, or piping of comparable strength to withstand anticipated traffic and shall extend approximately 4 feet beyond the pavement on both sides.

4. Specifications shall contain a requirement for a contractor-provided Trenching Plan, sealed by a Civil Engineer, for trenches deeper than five feet.

F. PROHIBITION OF ASBESTOS

1. Include in the project specifications a section detailing the prohibition of materials and equipment containing any form of asbestos. Also require a certification from the Contractor. A sample specification section (with blank affidavit form attached) is available upon request.

TxDOT Maintenance Division
Facilities Management Section
Engineering Services Branch

Design Standard

Title: **Water Plumbing Systems** **Number:** **P2.01**

Issue Date: **March 2009** **Rev #:** **3**

Approved: _____
Engineering Services Supervisor

A. General Plumbing:

1. Minimum piping size for all systems shall be 3/4". Faucets with smaller size connections shall have transitions at the point of connection, minimizing the length of smaller piping.

2. The following piping sizes shall be prohibited for use in any system: 1-1/4", 2-1/4", 3-1/2", and 5".

B. Domestic Water Plumbing:

1. From the water meter to a point 5 feet from the footprint of the building, water piping under 4" shall be soft drawn Type K copper. For 4" and above, water piping shall be C-900, gasketed PVC.

2. Water piping from 5 feet outside the building footprint to the building and under slab shall be soft drawn Type K copper, to a point 12" A.F.F. All above slab water piping shall be hard drawn, rigid Type K copper.

3. All buried water piping, including under slab, shall be bedded in sand, a minimum of two inches on all sides, and shall be a minimum of 24 inches below finished grade or floor.

4. All flush valves in office and shop buildings shall be exposed, Sloan Royal, Zurn AquaVantage, or approved equal.

5. All faucets in office and shop buildings shall be specified as Chicago Faucets "or approved equal" with #369 handles (standard handles), not "wrist blade" handles. (Note that these handles comply with ADA accessibility requirements on Chicago Faucets faucets.)

6. All flush valves and faucets in Safety Rest Area restrooms (in public areas)

shall be concealed, automatic, electronically actuated Sloan Royal, Zurn AquaVantage, or approved equal. Override buttons shall be installed on all water closets and urinals. (Note that Sloan sensor operated flush valves for water closets usually include an override button, but urinal flush valves do not. In order to designate the override button option, add "OR" to the model number, e.g. #195-1.0 ES-S-**OR**, and specify that it shall include an override button. This does not appear in the Sloan catalogue or on the website; however this has been verified directly with the Sloan factory.)

7. Pitch all water piping to a drainable location; all piping shall be drainable.

8. Insulate all hot and cold water piping with a minimum of one inch thick, jacketed fiberglass insulation, and provide PVC covered fitting insulation at all fittings and valves. Insulate all exposed piping under all lavatories in the Restrooms with insulation designed for that purpose, such as by Truebro.

9. Water closets and urinals shall be vitreous china. All water closets and urinals in all types of buildings shall be wall hung. All fixture heights shall conform to ADA requirements. All installations shall be required to include water closet chairs and carriers.

10. All lavatories shall be vitreous china. If counter mounted lavatories are used, they shall be self-rimming type. (Under counter-mounted lavatories are not acceptable.) The installation of wall hung lavatories shall be required to include extended arm carriers.

11. Provide a mop sink and floor drain in Janitor Closets for maintenance use. The faucet scheduled for installation with mop and service sinks shall be based on Chicago Faucet products. Specify a wall-braced faucet with bucket hook. Provide a backsplash and wall mounted mop hooks with all mop sinks.

12. Provide floor drains in Restrooms, located under the open area of partitions and under lavatory areas to avoid tripping hazards.

13. All floor drains (except floor drains in shower stalls) shall have trap primers.

14. "Instantaneous" electric water heaters are prohibited for use on TxDOT projects.

15. Emergency eyewashes and showers shall be provided in all labs and vehicle shops. Provide a locking ball valve for isolation for service, locked in the open position. The installation shall conform to NFPA 101.

C. Non-potable Water Systems

1. Water supplies to non-potable water systems (such as water truck fill stations and wash bay use) shall be provided with full sized double check valve backflow preventer assemblies, manufactured and listed, with test ports, as

defined in the Uniform Plumbing Code. The double check valve assemblies shall be installed in a ground vault designed and sized for that purpose if it is not convenient to install it in a weather protected location.

2. Water supplies to irrigation systems shall be provided with full sized reduced pressure zone backflow preventer assemblies, manufactured and listed, with test ports, as defined in the Uniform Plumbing Code. The backflow preventer shall be installed in a location close to the water meter and it shall be protected from traffic and freezing. Note that if the same system serves other non-potable uses such as a truck fill station or washbay, then no other backflow prevention device will be required on the system.

3. Water piping sizes for water truck filling stations shall provide a minimum of 1000 gallons in a maximum of 20 minutes, for a minimum of 50 gallons per minute. The minimum water supply piping size shall be two inches.

TxDOT Maintenance Division
Facilities Management Section
Engineering Services Branch

Design Standard

Title: **Sanitary Plumbing Systems** **Number:** **P2.02**

Issue Date: **March 2009** **Rev #:** **1**

Approved: _____
Engineering Services Supervisor

A. Sanitary Plumbing

1. Sanitary piping from a point 5 feet outside the building footprint to the building and under slab shall be gasketed cast iron with "Ty-seal" type joints to a point at least 12" A.F.F. All piping above slab in buildings (including vents) shall be no-hub cast iron or gasketed cast iron with "Ty-seal" type joints.

2. All sanitary waste and vent piping shall be sloped 1/8" to 1/4" per foot (1 to 2 percent) in the direction of flow.

3. Roof drain piping within buildings shall be insulated (as specified for water piping) a minimum of 15 feet from the drain.

4. Cleanouts shall be shown to be installed so that the maximum amount of piping can be accessed.

TxDOT Maintenance Division
Facilities Management Section
Engineering Services Branch

Design Standard

Title: **Exterior Plumbing Systems** **Number** **P2.03**

Issue Date: **March 2009** **Rev #:** **1**

Approved: _____
Engineering Services Supervisor

A. Exterior plumbing

1. All buried piping systems, including sleeves, shall be a minimum of 24" deep, bedded in minimum 2" of sand on all sides, top, and bottom. This shall include under slab piping.

2. Exterior water piping up to 5 feet from the building footprint shall be as described in Design Guide P2.01.

3. Exterior fuel gas piping shall be as described in Design Guide P2.04.

4. Exterior compressed air piping shall be as described in Design Guide P2.05.

5. Exterior sanitary piping up to 5 feet from the building footprint shall be Schedule 40 or C-900 PVC.

6. Sanitary piping shall have cleanouts at intervals no greater than 75 feet.

7. Exterior hose bibbs on building(s) shall be freezeproof.

8. Exterior plumbing under pavement shall be sleeved as described elsewhere in these guidelines.

TxDOT Maintenance Division
Facilities Management Section
Engineering Services Branch

Design Standard

Title: **Fuel Gas Plumbing Systems** **Number:** **P2.04**

Issue Date: **March 2009** **Rev #:** **1**

Approved: _____
Engineering Services Supervisor

A. Fuel Gas (natural and LPG gas) Piping

1. All fuel gas piping and fittings within buildings shall be schedule 40 black steel, threaded up to 2 inch, and welded 2-1/2" and over.

2. Piping size changes shall be made using bell reducers, or reducing fittings. The use of bushings shall be prohibited.

3. Exterior, buried fuel gas piping shall be either corrosion protected black steel or safety yellow colored polyethylene piping, specifically manufactured for fuel gas service. Joining of polyethylene piping shall be by butt fusion method.

4. The construction documents shall specifically prohibit the use of galvanized steel and copper piping and fittings for use as fuel gas piping.

5. Dirt legs and flexible gas hose shall be required at all connections to appliances and points of use.

TxDOT Maintenance Division
Facilities Management Section
Engineering Services Branch

Design Standard

Title: **Compressed Air Plumbing Systems** **Number:** **P2.05**

Issue Date: **March 2009** **Rev #:** **1**

Approved: _____
Engineering Services Supervisor

A. Compressed Air Systems (Shop Buildings and Labs)

1. Compressed air piping shall be rigid, hard drawn, Type K copper.
2. Dirt legs and quick disconnect fittings shall be required at all points of use.

TxDOT Maintenance Division
Facilities Management Section
Engineering Services Branch

Design Standard

Title: **Grease and Oil Plumbing System** **Number:** **P2.06**

Issue Date: **March 2009** **Rev #:** **1**

Approved: _____
Engineering Services Supervisor

A. Centralized Grease and Oil Systems (Shop Buildings, if required)

1. Grease and oil piping shall be Schedule 80, black steel pipe and fittings.
2. Systems shall include central grease system and pump, piped to a point of use in the center of the vehicle shop.
3. Systems shall include a set of retractable reels for grease, oil (if used), water, compressed air, and 120 volt power.

TxDOT Maintenance Division
Facilities Management Section
Engineering Services Branch

Civil Design Standards

TABLE OF CONTENTS

NUMBER	TITLE	ISSUE DATE	Rev. No.	Pages
C1.01	Site Survey & Topography	March 2009	1	1
C1.02	General Construction Notes	March 2009	1	2
C1.03	Site Grading & Drainage Improvements	March 2009	1	1
C1.04	Water Improvements	March 2009	1	2
C1.05	Wastewater Improvements	March 2009	1	3
C1.06	Flexible Pavement Improvements	March 2009	2	3

TxDOT Maintenance Division
Facilities Management Section
Engineering Services Branch

Civil Design Standard

Title: **Site Survey & Topography** **Number: C1.01**

Issue Date: **March 2009** **Rev #: 1**

Approved: _____
Engineering Services Supervisor

A. Site Survey: A site survey will be provided for the project site by a surveyor licensed by Texas Board of Professional Land Surveyors (TBPLS). The property boundaries, easements, existing improvements and other information normally associated with property surveys shall be in accordance with TBPLS requirements. Prior to designing improvements the engineering consultant shall satisfy him/herself that the survey accurately depicts what is on the ground and the proposed improvements are within in the bounds or within easements shown on the survey.

B. Topography: A topographic map will be provided for the project site. Requirements and standards are set forth in TxDOT Survey Manual, February 2006. The Survey Manual is available on-line at: http://www.dot.state.tx.us/business/. A minimum of one accurately described benchmark shall be provided on the plans, two or more benchmarks are preferred.

TxDOT Maintenance Division
Facilities Management Section
Engineering Services Branch

Civil Design Standard

Title: **Construction Notes** **Number:** **C1.02**

Issue Date: **March 2009** **Rev #:** **1**

Approved: _____
Engineering Services Supervisor

A. General Notes shall include but not be limited to the following:
   1. A project description
   2. A reference to Texas Department of Transportation Standard Specifications, 2004, for materials and methods.
   3. A reference to Texas Commission on Environmental Quality (TCEQ) Chapters 290 and 317 for water and wastewater improvements. All materials and methods for water and wastewater improvements shall be in accordance with current AWWA requirements.
   4. A note that all construction operations shall be accomplished in accordance with State and Federal Health and Safety Codes.
   5. A note that all work within TxDOT rights of way will be coordinated with the Roadway Maintenance Supervisor. Provide the name and phone number.
   6. Provide the phone numbers for the local Police Department and/or Sheriff Office, Fire Department, Water Department and Wastewater Department. Other numbers as may be appropriate.

B. Utilities
   1. A note for the contractor to contact the area "One Call" system 48 hours prior to beginning any excavation.
   2. Contractor notification prior to shutting off a waterline or disconnecting a wastewater line.
   3. If working in a TxDOT right of way all work will require a Utility Permit from the TXDOT District Office and shall provide traffic control measures in accordance with the TMUTCD.
   4. Other notes the consultant feels are necessary or prudent to include.

C. Environmental

1. Install erosion/sedimentation per the plans prior to beginning construction.
2. Conduct a pre-construction meeting, including the District Environmental Coordinator, to insure compliance with the Storm Water Pollution Prevention Plan (SW3P).
3. Seeding for erosion control shall be in accordance with Items 164 and 166, TxDOT Standard Specifications, 2004, for the _____District #___.

TxDOT Maintenance Division
Facilities Management Section
Engineering Services Branch

Civil Design Standard

Title: **Site Grading and Drainage** **Number: C1.03**

Issue Date: **March 2009** **Rev #: 1**

Approved: _____
Engineering Services Supervisor

A. The engineer will be provided a site plan by the architect designating the location of buildings, driveways, parking and other improvements. The engineer is responsible for insuring that the finish floor elevations, site grades and drainage improvements will provide positive drainage such that no flooding, pooling or ponding of water will occur and that the grading will also meet ADA requirements.
   1. Set finished floors such that a minimum of 12" of foundation is exposed after landscaping has been installed
   2. Provide detailed contour lines and spot elevations to insure that the site contractor has more than adequate information to construct the improvements.
   3. If the design engineer finds that the site grading or improvements do not work well with the site plan provided, i.e., excessive retaining walls, difficulty meeting ADA requirements, inadequate room to provide drainage and/or utility improvements, excessive cut or fill around trees, etc., he/she will notify the project manager immediately.

B. The site drainage will be designed to a 25 year frequency storm and the 100 year frequency storm will be checked to assure that no building is inundated.
   1. The most common and acceptable methods for determining storm runoff are the Rational Method or the NRCS Runoff Curve Number Method (TR 55).
   2. The hydrology and hydraulic design will be in accordance with TxDOT's Hydraulic Design Manual, March 2004. The manual is available online at: http://www.dot.state.tx.us/business/
   3. The engineer will determine if storm water detention is necessary to attenuate downstream flood flows and mitigate potential increased flooding generated from the proposed improvements.

C. Use of TxDOT's standard details for construction such as inlets, culverts, etc. are acceptable provided they are modified to be site specific. The CAD Standards are available online at: http://www.dot.state.tx.us/business/

TxDOT Maintenance Division
Facilities Management Section
Engineering Services Branch

Civil Design Standard

Title: **Water Improvements** **Number: C1.04**

Issue Date: **March 2009** **Rev #: 1**

Approved: _____
Engineering Services Supervisor

A. Water supply will vary from site to site. In general, if a public water system is available for service this is the preferred option. If the site does not come under the requirements of TCEQ as a Public Water Supply (PWS) the improvements will still be designed per TCEQ Rules. If the system is considered a PWS the design and approvals will be in accordance with TCEQ Rules. If the site requires a new water well coordinate this with the Engineering Services Branch for the design.

B. Off site water improvements that are being provided by a PWS will be designed in accordance the providers requirements and in compliance with TCEQ Rules.

C. On site water improvements will include the following:

1. Water lines less than two inches will be Type K copper and a rated working pressure of 150 psi.
2. Lines two inches but less than four inches may be Type K copper, or gasketed (glued joints are not acceptable) PVC Schedule 40 or 80.
3. Lines four inches and greater will be AWWA C-900, SDR 18 or SDR 14.
4. If lines 4" or greater are placed in fill material (not in-situ excavation) the pipe material will be ductile iron, push-on or mechanical joint pipe (AWWA C-151).
5. Provide sufficient valves for operation and maintenance. Valves less than four (4) inches will be brass ball valves, valves four (4) inches and greater will be iron body gate valves. All valves will be placed in valve boxes with ball valves in concrete boxes with cast iron lids and gate valves in cast iron boots with cast iron lids. If valve boxes having locking mechanisms or gate valves are specified have the contractor provide the appropriate valve box and/or valve keys. Valves will be placed on pea gravel.
6. Fittings will be appropriate to the type pipe being used and will conform to AWWA Standards.

7. Water and wastewater separation distances and crossings will be in compliance with TCEQ Rules.
8. Water services will terminate five (5) feet from buildings at locations determined by the buildings' Mechanical Engineer. Provide a building shut-off valve and valve box.
9. Water service for irrigation systems will be coordinated with the Project's Landscape Architect or the irrigation system designer.
10. Water pipe will be in a bedding envelope. If trenched in silts, sands, clays or some combination thereof provide a fine aggregate bedding material of either a washed sand or a washed pea gravel. If trenched in rock provide a course aggregate bedding of clean gravel, crushed gravel or crushed limestone. Provide a size gradation for the materials specified.
11. All waterlines will be installed with a tracer tape or wire.
12. At tees, bends, etc. on waterlines will have restrained joints or be blocked.

TxDOT Maintenance Division
Facilities Management Section
Engineering Services Branch

Civil Design Standard

Title: **Wastewater Improvements** **Number: C1.05**

Issue Date: **March 2009** **Rev #: 1**

Approved: _____
Engineering Services Supervisor

A. Wastewater service will vary from site to site. The engineer will conduct a feasibility to determine the best method to dispose of wastewater either by transmission to an organize system or an on-site sewage facility. In general, if a public wastewater system is available for service this is the preferred option The engineer will complete the design for the type system chosen and gain approval for construction from the appropriate regulatory authorities. If the site requires a new Municipal Wastewater Permit (TPDES) from TCEQ, coordinate this with the Engineering Services Branch.

B. Off site wastewater improvements that are being provided by others will be designed in accordance the providers requirements and in compliance with TCEQ Rules.

C. On site wastewater improvements will include the following:

1. Gravity wastewater lines will be a minimum of four (4) inches in diameter with a minimum grade of 1.0%. Sites requiring a six (6) inch line will have a minimum grade of 0.5%. Grades exceeding 5% should be avoided.
2. Lines four inches and greater will be gasketed PVC SDR 26 under paved areas and may be SDR 35 in nonpaved areas.
3. A minimum of 48" of cover for pipes in paved areas and a minimum of 36" of cover in nonpaved areas.
4. If lines are placed in fill material (not in-situ excavation) the pipe material will be cement lined ductile iron.
5. Provide sufficient cleanouts and manholes for operation and maintenance.
6. Manholes may be pre-cast concrete or cast-in-place with a diameter of four (4) feet and have a 30" cast iron lid and ring. Manholes should be raised to match paved surfaces and be should be a minimum of three (3) inches above non-paved surfaces.
7. Cleanouts should be provided at ends of services, at bends each way, and inline at a spacing not to exceed 50 feet. Cleanouts in paved surfaces will

have a cast iron boot and lid, a concrete collar and will match the paved surface. Cleanouts in non-paved surfaces will have a concrete collar and may match the finished surface.

8. Water and wastewater separation distances and crossings will be in compliance with TCEQ Rules.
9. Wastewater services will terminate five (5) feet from buildings at locations determined by the buildings' Mechanical Engineer. Provide a cleanout or manhole.
10. Wastewater pipe will be in a bedding envelope. If trenched in silts, sands, clays or some combination thereof provide a fine aggregate bedding material of either a washed sand or a washed pea gravel. If trenched in rock provide a course aggregate bedding of clean gravel, crushed gravel or crushed limestone. Provide a size gradation for the materials specified.

D. Systems requiring lift stations will provide the following:
   1. Wet wells will be pre-cast concrete with a concrete bottom and ballast (check the station for floatation) and a concrete pad a minimum of 6 inches above the finished surface. The backfill will be a washed sand or clean pea gravel.
   2. The wet well will have an aluminum or stainless steel hinged, locking, access hatch. In no case will steel lids be allowable.
   3. In coastal areas, fiberglass wet wells and lids may be considered on a case by case basis.
   4. The station will have a duplex pump system with stainless guide rails and mercury type float controls, mounted on a stainless steel hanger, for low level shutoff, lead pump on, lag pump on and a high water alarm.
   5. The station will have an alarm light and an audible alarm.
   6. Each pump will have a H-O-A switch and an accumulative run time counter.
   7. The control panel will be a NEMA-4 Stainless box mounted on a galvanized steel or stainless steel frame a minimum of 36 inches from the bottom to the finished grade. If the station is located in a flood prone area raise the station's finished grade to prevent inundation.
   8. The specified pumps will be a grinder type that are relatively easy to maintain and operate. Parts and service should be available within a one to two hour drive of the site or provide a replacement pump with the new system.
   9. The pump motors should be three phase if three phase power is available. Provide a pump design that provides the best operating efficiency with the minimum power requirements.
   10. Provide a stainless steel pump lift hoist.
   11. Ball valves and check valves on each discharge line will be installed outside the wet well in concrete valve boxes with cast iron lids. In no case will valves inside the wet well be acceptable.
   12. Force mains may be PVC gasketed Schedule 40 or 80 or PVC pipe meeting a 150 psi operating pressure. The line is to be sized to have a

minimum scour velocity of 2.5 feet per second. A maximum of eight fps, but preferably no more than 5 fps.

13. If there high spots in the force main profile provide appropriate air release or combination air release/vacuum valves.

TxDOT Maintenance Division
Facilities Management Section
Engineering Services Branch

Civil Design Standard

Title: **Flexible Pavement** **Number:** **C1.06**

Issue Date: **March 2009** **Rev #:** **2**

Approved:

Engineering Services Supervisor

A. PAVEMENT SECTION DESIGN GUIDELINES

1. Pavement section designs shall comply with the following guidelines for all capital improvement projects. All designs will require review and approval of the Maintenance Division. Any consultant engineer or district wishing to modify these guidelines must request, through the project's Project Manager, proposed changes in writing to Zane Webb, P. E., Director, Maintenance Division.

2. Specifications: All Item references are to the current Texas Department of Transportation, STANDARD SPECIFICATIONS FOR CONSTRUCTION AND MAINTENANCE OF HIGHWAYS, STREETS, AND BRIDGES, 2004 or as may be referred to as TEXAS STANDARD SPECIFICATIONS 2004.

Subgrade: Soils which soil boring samples indicate are stable for the intended purpose and at the discretion of the Engineer, shall not require additives for proper density and may be prepared in situ and Proof Rolled per Item 216.

All other subgrades shall be scarified or cut and pulverized to a minimum depth of 6". Clay soils shall be lime stabilized by slurry or dry placement method at a rate of 3% by weight or as shown on the plans in accordance with Item 260. Sandy soils shall be cement stabilized at a rate of 3% by weight or as shown on the plans in accordance with Item 275. All deleterious materials shall be removed from this layer prior to any stabilization and/or compaction. Compaction methods shall be Ordinary Compaction, or as specified by the engineer, in accordance with Item 132.

Flexible Base: Flexible Base shall be a minimum of 12" of a type and grade material as specified by the Engineer and in accordance with Item 247. If, in the opinion of the Engineer, this standard should be modified, prepare a justification for this modification and submit it to the Project Manager.

Prime Coat: The prime coat shall be a MC – 30, in accordance with Item 300, and applied at a rate of 0.2 gallons per square yard, in accordance with Item 310.

Surface Treatment: The surface treatment shall be a single course treatment constructed in accordance with Item 316. The asphalt shall be a material listed for Surface Treatment in Table 18, Item 300 and/or as directed by the Engineer, and specify a recommended approximate application rate. The aggregate shall be a Type B Grade 4 in accordance with Item 302.

Pavement Surface: The pavement surface course shall be 2 inches of Type C hot mix asphaltic concrete (HMAC) in accordance with Item 340.

The above descriptions are to direct intent and not considered complete specifications. Engineers are directed to the TxDOT web site, http://www.dot.state.tx.us/business/specifications.htm, for appropriate special designs, provisions and specifications.

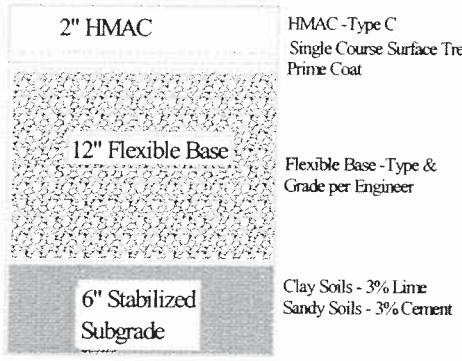

Typical Pavement Section

Pavement Materials Note:

The Design Engineer must establish the following material types and estimated ranges of material rates. The exact rates must be selected during construction based on materials used.

Subgrade Treatment: _____
Flexible Base: Type ____, Grade ___
Prime Coat: Type _____, Application rate ____ Gal/SY
Surface Treatment:
Aggregate: Type ___, Grade ___, Application rate ___CY/SY
Asphalt: Type _____, Application rate ____ Gal/SY
Pavement Surface: 2" HMAC Type ___

PART – 3

ENERGY CONSERVATION STANDARDS

TxDOT Maintenance Division
Facilities Management Section
Engineering Services Branch

Design Standard

Title: **Energy Conservation** **Number:** **EC1.01**

Issue Date: **March 2009** **Rev #:** **1**

Approved: _____
Engineering Services Supervisor

DESIGN STANDARDS

Use of ASHRAE/ANSI Standard 90.1-2007 is required for all facility construction and/or major renovation projects. The Architects and Engineers responsible for the project must certify, seal and date (requires a registered Architect or Engineer) a statement of compliance that the project design conforms to the requirements of ASHRAE/ANSI Standard 90.1-2007.

All drawings and specifications shall be reviewed and approved by TxDOT Maintenance Division Facility Management Section Engineering Services Group prior to release for bidding.

The Engineering Services Group will certify to the State Energy Conservation Office that the project is in compliance with State Energy Conservation Code.

PART – 4

SPECIAL PROVISION COMPUTER FILES FOR DOCUMENT AND INFORMATION EXCHANGE

TABLE OF CONTENTS

PART 1a: Document and Information Exchange Page 2

PART 1b: AutoCAD Drafting Standards Page 7

PART 1a: DOCUMENT AND INFORMATION EXCHANGE

A. GENERAL (Texas Department of Transportation, Maintenance Division, Facilities Management Section hereafter referred to in this document as "TxDOT")

1. TxDOT shall not be held responsible for the usage of files contained on the included CD. These files are standard sheets and tools to assist the Architect / Engineer and usage is optional.

2. Copyright – All sheets composing the construction documents shall bear copyright symbol indicating the year of its bid date. This symbol is located on the TxDOT standard cover sheet and title block edit text to reflect the correct year.

3. Progress, final and as-built construction document drawings shall be prepared with Computer-Aided Design and Drawing (CADD) technology. Drawing files shall be delivered to the State in one of the following file formats: DWG - AutoCAD® Release 2007 or earlier. Raster scanned drawings will not be accepted. All plot files referenced in drawings shall be provided. Drawings created in 3D format shall be converted to 2D format prior to submittal. Specifications shall also be required in electronic format with all section names following the current CSI format. An index shall be provided. All specification files shall be submitted in MS Word® Release 97 or later compatible files and PDFs capable of being opened with Acrobat Reader 5.0. Each Section shall have its own separate file (i.e. 08111.doc and 08111.pdf). Electronic copies (Compact Disks) of the specifications, progress, final, and as-built drawings, as appropriate, shall be submitted with the hard copy deliverables for each phase of the work being reviewed.

4. Obtaining any standard publications and documents mentioned in this document is the sole responsibility of the consultant.

5. The files shall be submitted on CD, and each CD shall bear a label containing the following information:

   PROJECT NAME
   CONSULTANT NAME
   PROJECT NUMBER
   PHASE NAME
   CONTRACT NUMBER
   DISK NUMBER OF TOTAL DISKS

B. NAME AND FOLDER STRUCTURE:

1. All drawings and specifications shall be submitted to TxDOT in electronic format including a hardcopy. All drawings shall be submitted under folder structure diagram shown in Figure#1. The folder name shall be the firm company name or an abbreviation of the firm name followed by the underscore character and the last three digits of the project number; special characters are prohibited the firm folder name shall be equal or less than sixteen characters. Consultants shall make use of relative path external references by following the shown folder structure in Figure#1 the path links shall be maintained by maintaining the folder structure. Provide the discipline folders as

applicable. The submitted drawings shall include the folder structure and all applicable drawings. Reference External references Figure#1 for the folder structure diagram.

C. COVER SHEET

1. **Cover Sheet** – The standard TxDOT coversheet shall be used on all projects. The cover sheet shall include the following:

   a. An area and a region location map (AutoCAD® generated)
   b. The sheet index
   c. Scope of work in detail
   d. Phasing (If applicable)
   e. Square footage Statistics (as applicable for complete new buildings)
   f. Parking Statistics (as applicable)
   g. A list of applicable code standards used during the project's design (as applicable)
   h. The TxDOT Project number
   i. The Project Title (as it appeared when it received funding)
   j. The title of the project and TxDOT project number shall occur a second time in the location given in the example file where it can be identified when the drawings are rolled up.

D. PROFESSIONAL SEAL

1. **Professional Seal** – If the drawings submitted contain an electronic seal the following information shall be included:

   a. **Architect** – "The record copy of this drawing is on file at the offices of (name of firm), (address of firm). This electronic document is released for the purposes of reference, coordination, and/or facility management under the authority of (name), (registration number) on (date). Any modification(s) to this drawing shall be in compliance with the Texas Board of Architectural Examiners' rules."

   b. **Engineers** – "The seal appearing on this document was authorized by (Example: Leslie H. Doe, P.E. 0112) on (date)."

E. TITLE BLOCK

1. **Title Block** – All sheets except the cover sheet shall use the standard TxDOT title block located on the CD.

F. SHEET SIZE

1. **Sheet Size** – All sheets shall be set up to plot at 22" x 34". All view ports shall be laid out according to the scale factor that each element should be plotted. All disciplines shall follow the architectural view port scale for each floor plan. Provide a 22"x34" and 11"x17" plotted set at time of submittal.

G. COMPANY LOGOS

1. **Company Logos** – Logos may be used, however the logo shall not contain fonts that are not standard AutoCAD® font files.

H. DRAWING FILE NAMES

1. **Drawing File** names shall match the sheet number. Refer to the drawing numbering standards, however replace the period with an underscore. Example: A2.1 = A2_1.DWG. Drawing files using multiple layout tabs shall be named with the range of sheets included. (ie. a file with all of the elevations would be named A5_1to2 with 1to2 indicating that A5.1 and A5.2 are included within that file). Files containing Plan Sheets should not have multiple layout tabs within one file that are not directly related to each other by means of a common x-ref. Section, Detail and Schedule Sheets maybe combined into one file where determined logical by the drafter.

I. DRAWING NUMBERING FORMAT STANDARDS

1. **Construction Drawings:** Sheet Numbers shall be constructed of 3 parts. A letter denoting the discipline, a number denoting the Series and a second number after a decimal point the number of the sheets in the respective series. (ie. A2.1 indicates that it is the first Plan Sheet in the Architectural. Sheet Numbers for Plan Sheets shall be kept consistent across all disciplines. (ie. A2,1, S2.1, M2.1, E2.1, P2.1 should all be the same building.) The letter abbreviation for sheet discipline and the order in which they shall occur will be as follows: C (civil), L (landscape), A (architectural), S (structural), M (mechanical), P (plumbing), E (electrical), FP (fire protection), T (telecommunications), F (furnishings), G (graphics & signage), K (kitchen or food service). Demolition Sheets if required shall be a standard Sheet Number preceded by a (D) denoting them as Demolition Sheets. Demolition Sheets shall be included in the drawing set at the beginning of each of their respective Disciplines Sections. Projects containing a small amount of Demolition work not requiring a demolition contract are exempt from the requirement for separate Demolition Sheets and shall use clearly defined and identified demolition notes on the Plan Sheets. The State's determination as to the requirement for Demolition Sheets shall be final. Abbreviations for other disciplines shall be assigned as required. Sheet number assignment and sheet content may vary with size and scope of the project. Refer to Table 1 below for Drawing Numbering and content distribution:

Table 1

DRAWING NUMBERING STANDARDS		
SHEET DISCIPLINE	**SHEET SERIES/NUMBER**	**DESCRIPTION**
COVER	COVER	COVER SHEET
CIVIL		
C	C1.1, C1.2 ETC.	GENERAL NOTES / DIMENSIONAL PLAN
	C2.1, C2.2 ETC.	EROSION AND SEDIMENTATION CONTROL
	C3.1, C3.2 ETC.	GRADING/ STORM SEWER/ PROFILES
	C4.1, C4.2 ETC.	WATER AND WASTEWATER PLANS

	C5.1, C5.2 ETC.	CIVIL DETAILS AND TREE PROTECTION
LANDSCAPE		
L	L1.1, L1.2 ETC.	TREE PROTECTION PLANS AND DETAILS
	L2.1, L2.2 ETC.	LANDSCAPE DETAILS
	L3.1, L3.2 ETC.	IRRIGATION PLAN
	L4.1, L4.2 ETC.	VEGETATION SCREENING PLANS & SUMMARIES
	L5.1, L5.2 ETC.	BED LAYOUT AND PLANTING AT BUILDINGS
ARCHITECTURAL		
A	DA1.1, DA1.2 ETC.	SITE DEMOLITION PLANS
	DA2.1, DA2.2 ETC.	ARCHITECTURAL DEMOLITION FLOOR PLANS
	A1.1, A1.2 ETC.	SITE PLAN/LANDSCAPE, SITE DETAILS
	A2.1, A2.2 ETC.	FLOOR PLANS/PARTIAL PLANS
	A3.1, A3.2 ETC.	ROOF PLAN / DETAILS
	A4.1, A4.2 ETC.	REFLECTED CEILING PLANS
	A5.1, A5.2 ETC.	EXTERIOR BUILDING ELEVATIONS
	A6.1, A6.2 ETC.	ENLARGED FLOOR PLANS AND INTERIOR ELEVA.
	A7.1, A7.2 ETC.	BUILDING SECTIONS
	A8.1, A8.2 ETC.	WALL SECTIONS / PARTITION DETAILS
	A9.1, A9.2 ETC.	FINISH, WINDOW, DOOR SCHEDULES / DETAILS
	A10.1, A10.2 ETC.	MISCELLANEOUS DETAILS
	A11.1	TAS STANDARDS DETAIL SHEET
STRUCTURAL		
S	S1.1, S1.2 ETC.	FOUNDATION PLAN / DETAILS
	S2.1, S2.2 ETC.	FRAMING PLANS / DETAILS
	S3.1, S3.2 ETC.	SCHEDULES
	S4.1, S4.2 ETC.	MISCELLANEOUS DETAILS
SITE UTILITY		
PE	DPE1.1, DPE1.2 ETC.	SITE UTILITY DEMOLITION PLANS
	PE1.1, PE1.2 ETC	SITE UTILITY PLANS
MECHANICAL		
M	DM2.1, DM2.2 ETC	MECHANICAL DEMOLITION FLOOR PLANS
	M2.1, M2.2 ETC.	MECHANICAL FLOOR PLANS
	M4.1, M4.2 ETC.	MECHANICAL SCHEDULES
	M5.1, M5.2 ETC.	MECHANICAL DETAILS
PLUMBING		
P	DP2.1,DP2.2 ETC.	PLUMBING DEMOLITION FLOOR PLANS
	P2.1, P2.2 ETC.	PLUMBING FLOOR PLANS
	P3.1, P3.2 ETC.	PLUMBING RISERS
	P4.1, P4.2 ETC.	PLUMBING SCHEDULES
	P5.1, P5.2 ETC.	PLUMBING DETAILS
ELECTRICAL		
E	DE2.1, DE2.2 ETC.	ELECTRICAL DEMOLITION FLOOR PLANS
	E2.1, E2.2 ETC.	ELECTRICAL FLOOR PLANS
	E3.1, E3.2 ETC.	ELECTRICAL RISERS
	E4.1, E4.2 ETC.	ELECTRICAL SCHEDULES
	E5.1, E5.2 ETC.	ELECTRICAL DETAILS
WASTEWATER		
W	W1.1, W1.2 ETC.	SYSTEM NOTES, DIMENSION CONTROL PLAN
	W2.1, W2.2 ETC.	HYDRAULIC PROFILES, GRADING

	W3.1, W3.2 ETC.	WASTE WATER DETAILS
ORDER AND ABREVIATIONS OF ADDITIONAL DISCIPLINES AS REQUIRED BY PROJECT SCOPE:		
FP	FP1.1, FP1.2 ETC.	FIRE PROTECTION
T	T1.1, T1.2 ETC.	TELECOMMUNICATIONS
F	F1.1, F1.2 ETC.	FURNISHINGS
G	G1.1, G1.2 ETC.	GRAPHICS AND SIGNAGE
K	K1.1, K1.2 ETC.	KITCHEN OR FOOD SERVICE
ADDENDUM DRAWINGS		
EXAMPLE	AD2C2.1	
	(AD) ADDENDUM DRAWING	
	(2) ADDENDUM NUMBER	
	(C) SHEET SERIES (CIVIL)	
	(2.1) SHEET NUMBER	

PART 1b: AUTOCAD DRAFTING STANDARDS

A. PLOT STYLES

1. All Drawings shall be drawn utilizing the **"txdot.ctb"** Plot Style Table included in the CD. This Plot Style Table is designed to have 13 restricted colors (10-18 as well as 251-254) set up with various levels of screening while leaving the remaining 243 colors effectively transparent and unrestricted. This enables lineweight control of the remaining 243 unrestricted colors to be accomplished in the individual drawings on a bylayer basis. "**Txdot.ctb**" will override any changes that are made in the drawing file to the restricted colors(10-18 and 251-254). The Drafter is prohibited from editing the Plot Style Table.

B. TEXT STYLES:

1. Text style named **"TXDOT"** shall reference the font named "**Roman-s".** This text style shall be used for dimensions, leaders, general notes, keyed notes, tags, schedules, risers, door labels, floor plan notes. The text height shall be set at 3/32" when plotted on sheet size ANSI D 22" x 34" landscape.

2. Text style named **"TITLE"** shall reference the font named "**Arial".** This text style will be used for the external reference title block, insertion title block, detail call out block, headers and titles. This text style is already created within the drawings listed above. Headers and titles which identify subtopic information shall be set at 3/16" when plotted on sheet size ANSI D 22" x 34" landscape.

C. DIMENSION STYLES:

1. Architectural and Structural dimension styles named according to the drawing scale shall reference the text style named **"TXDOT"**. Each scale used in each drawing shall have a dimension style with the overall scale set in accordance to the named dimension style. Each dimension style will have the arrowheads set to architectural tick for dimensions and closed filled arrowheads for leaders.

2. Optional engineering dimension style named **"TXDOT-E"** shall reference the text style named **"TXDOT"**. This dimension style shall have the arrowheads set to closed filled for dimensions and leaders.

D. SCALING SINGLE LINE AND MULTILINE TEXT TO ACHIEVE THE TEXT HEIGHT:

1. Determine the scale by referencing a scaling chart or perform the following arithmetic.

2. If the viewport scale is set at 3/8" = 1' the scale factor can be calculated as shown below. *(1 / (3/8 inches))*(12 inches/ 1 foot) = 8/3*12=32 (The scale factor is 32)*

3. The text shown in model space through the scaled viewport set at a given scale must to be multiplied by the scale factor to achieve the standard text height.

4. The standard printed text height for floor plan notes is 3/32", if the scale for a given viewport is set at 3/8" = 1' then multiply 3/32*32. This means the text height shall be set at 3".

E. SCALING DIMENSIONS AND LEADERS USING DIMENSION STYLES ASSOCIATED TO SCALE:

1. Architectural and Structural disciplines shall use the dimension style to set the desired dimension scale. Each scale has a corresponding dimension style with a preset overall scale. This allows the drafter to set the dimension scale by making the dimension styles corresponding to the desired drawing scale current.

F. SCALING DIMENSIONS BY OVERRIDING DIMENSION STYLES WITH DIMSCALE:

1. Optional engineering disciplines minus Structural can utilize the keyboard command named "dimscale" to set the overall scale required for the drawing scale. This scales the text height, arrowhead size and offsets created in the dimension style for dimensions and leaders.

2. Dimensions and leaders can be updated to the current dimension scale by using the update dimension scale icon.

3. The dimension scale can be changed when drafting at different drawing scales for new dimensions and leaders at a different drawing scale. Once a dimension and/or leader is created, it will not inherit the current dimension scale unless you intentionally update the scale.

G. SCALING LINETYPES

1. The drafter shall set the linetype scale to one, the default setting in AutoCad. The check box indicating use paper space units for scaling shall be checked under the linetype manager dialog box. Use the keyboard command named, "ltscale" and set the linetype scale to the scale factor required for the current drawing scale while drafting in model space if desired. The drafter will then see the linetypes as they appear in paper space.

H. EXTERNAL REFERENCE FILES (X_refs)

1. The drafter shall not have duplicate copies of the same floor plan in the same drawing; all items shall be drawn over the same floor plan utilizing layers freeze to filter out layers in different view ports.

2. X_refs shall be overlayed utilizing the relative path option and attached at 0, 0, 0 coordinate point on layer X-ANNO-REFR. In order to make this possible all X_ref files for a specific building shall maintain the same location relative to 0, 0, 0. This will insure proper alignment of various X_ref plans for a given building. A base floor plan or any other X_ref plan shall not be moved once the drawings have started to develop. This can cause significant alignment problems for other disciplines and files that are referencing these files. This allows all drawings to have the same datum point of 0,0,0 at bottom left corner edge of slab.

3. Drafters shall not place text and notes pertaining to one specific discipline into drawings that are to be X_refed. An example of notes required for all drawings would be room labels. The room labels need to be on a separate layer so other disciplines can

reference the room labels, yet turn them off for display due to interfering locations in host drawings.

4. X_ref file names shall be constructed of the following 3 parts all separated by underscores. An X denoting that it is an X_ref Drawing, a four character discipline indicator, and a 2 character building designator indicating what building it is for. (ie. X_ARCH_OF indicates it is an Architectural X_ref file of the Office Building.) The 2 character Building designators should be as follows:

   a. Office Building – OF
   b. Lab/Shop Building – LS
   c. Vehicle Storage Building – VS
   d. Fuel Station – FS
   e. Wash Bay – WB
   f. Shop Building – SH
   g. Lab Building - LB

5. All X_ref drawings shall be placed in the "X_REF" folder. All projects folders shall have the same directory tree structure to insure that the relative location of the X_REF folder with respect to the drawing folders remains the same. The entire project shall be as listed in the file structure shown in Figure#1. If a discipline is not required in your project you do not have to include the folder. All drawings shall be under the discipline corresponding folder as indicated in Figure#1.

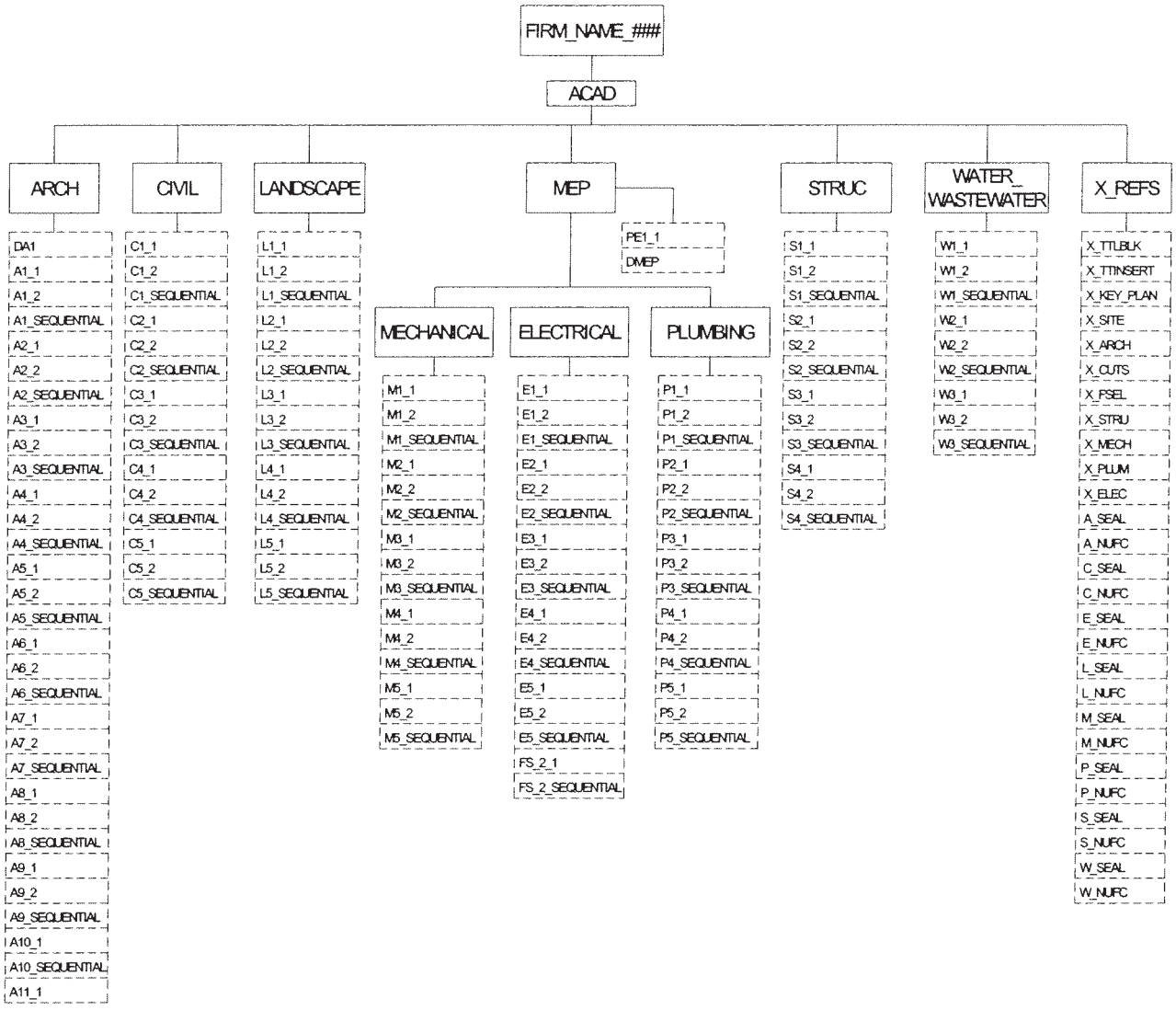

Figure 1

6. **X_REFS REQUIRED**:

(Note: All objects and entities drawn or inserted into an X_ref plan shall have the color and line weight set to "By Layer" for all Layers . The drafter is prohibited from overriding the layer color and line weight of individual items in an X_ref plan. The drafter may create an additional layer when necessary as described in the layer naming standard)

a. **Each Site shall have a base Site Plan minus text which shall be referenced into all other Site drawings called "X_SITE". The X_ref shall show the following to scale. All other items shall be indicated in the plan sheets.**

i. New and existing buildings

ii. Existing and abandoned Utilities including water, electrical, sanitary sewer, natural and LPG gas, compressed air
iii. Right of Way
iv. Trees
v. Grading
vi. Pavement design
vii. Flat work
viii. Fences including gates
ix. Existing and new fuel islands
x. Existing and new wash bay pads
xi. North arrow
xii. Equipment foundations
xiii. New and existing asphalt tanks
xiv. New and existing LPG tanks
xv. Highway designation
xvi. In no case should there be text which is specific to one discipline.

b. **Architectural shall provide a base floor plan minus text for each building which shall show and set the locations for the following. The base plan shall be called "X_ARCH". This is the responsibility of the architectural drafter. All other items shall be indicated in the plan sheets.**

i. Plumbing fixtures
ii. Reflected ceiling plan
iii. Walls
iv. Identifiable Fire walls
v. Identifiable walls to structure
vi. Windows
vii. Doors
viii. Room labels (exception to no text allowed)
ix. Floor drain locations
x. Modular furniture
xi. Headers
xii. Cabinets
xiii. Structural columns
xiv. Soffits
xv. Restroom partitions
xvi. Gutter down spouts and roof drains
xvii. Roof outline
xviii. Edge of slab

c. **Where a building requires critical sections when requested by a drafter on a case by case basis, the architectural drafter shall provide a separate drawing with base sections minus text for each building called "X_CUTS". The X_ref shall show the following. This is the responsibility of the architectural drafter. All other items shall be indicated in the plan sheets.**

i. Walls
ii. Roof outline
iii. Joist
iv. Columns

d. **Each building shall have a base structural plan minus text to be referenced into other drawings called "X_STRU". The X_ref shall show the following. This is the responsibility of the structural drafter. All other items shall be indicated in the plan sheets**

i. Grade beams
ii. Structural columns
iii. Wind bracing
iv. Roof purlins
v. Ceiling joists
vi. Roof joists

e. **Each building shall have a base mechanical plan minus text to be referenced into other drawings called "X_MECH". The X_ref shall show the following. This is the responsibility of the mechanical drafter. All other items shall be indicated in the plan sheets**

i. Air Inlets and outlets
ii. Exhaust fans
iii. Infrared heaters including thermostats
iv. Indoor units
v. Outdoor units
vi. Louvers
vii. HVAC equipment including thermostats
viii. Combustion vents through roofs
ix. Fire dampers
x. Roof top equipment including exhaust fans
xi. Unit heaters
xii. Roof Jacks
xiii. Equipment identification labels

f. **Each building shall have a base plumbing plan minus text to be referenced into other drawings called "X_PLUM". The X_ref shall show the following. This is the responsibility of the plumbing drafter. All other items shall be indicated in the plan sheets**

i. Water recycle equipment
ii. Water Heaters
iii. Vent stacks
iv. Air Compressors
v. Any plumbing device requiring electrical power
vi. All piping.
vii. Equipment identification labels

g. **Each building shall have a base electrical plan minus text to be referenced into other drawings called "X_ELEC". The X_ref shall show the following. This is the responsibility of the electrical drafter. All other items shall be indicated in the plan sheets**

i. Interior lights

ii. Exterior building lights
iii. Switchgear
iv. Voice data outlets
v. Receptacles
vi. Control panels
vii. Annunciator panels
viii. Leak detection panels

h. **Each discipline shall have a base seal to be referenced into other drawings called "X_SEAL". The "X" position shall represent the discipline designator, for example A_Seal.dwg shall represent the architectural seal. The drawing shall be externally referenced into the architectural drawings at zero, zero, zero insertion point. The X_ref shall include the seal name and number this text shall be capable of being modified at anytime. The title block drawing shall not contain blocks for seals.**

i. **Each discipline shall have a base seal to be referenced into other drawings called "X_NUFC". The "X" position shall represent the discipline designator, for example M_NUFC.dwg shall represent the mechanical not used for construction disclaimer label. The drawing shall be externally referenced into the mechanical drawings at zero, zero, zero insertion point. The X_ref shall include the seal name, number and date this text shall be capable of being modified at anytime. The title block drawing shall not contain not used for construction disclaimer labels.**

j.

I. SCALE AND NORTH ARROW

1. **Scale and North Arrow -** shall occur on all Plan sheets. The North Arrow shall indicate both plan north and actual north. Plan North shall be defined on the Site Plan and shall be kept consistent through all other plan sheets. The Site Plan shall be set so that Actual North is straight up (90°) and Plan North shall be the direction that is closest to actual North and perpendicular to one face of the building. All Plan Sheets should be set up whenever practical so that Plan North is at 90°. In some case it maybe necessary for sheets to be set with Plan North at 0° or 180°. In such case the Location Key Plan shall be rotated to the same angle. An indication of the scale to which the plan is drawn should be indicated directly under the plan title in either 1/8" or 3/16" letters and in graphic form. A general note should be included on each sheet stating the original sheet size in which the project's Construction Documents were issued.

J. LOCATION KEY PLANS OR SECTIONS DIMENSIONING

1. **Location Key Plans or Sections –** Provide a Location Key Plan whenever there is more than one structure in the Project. Location Key Plans shall include all structures for which there will be Plan Sheets in the Project and any existing structures already onsite. Location Key Plans should be located consistently in the lower right corner of the sheet . The Location Key Plan shall be oriented so that the building on the plan sheet is at the same orientation. As previously mentioned all Plan Sheets should be set up whenever practical so that Plan North is at 90°. In some cases it maybe necessary for sheets to be set with Plan North at 0° or 180°. In such cases the Location Key Plan shall be rotated to the same angle.

K. DIMENSIONING

1. **Plan Dimensioning**
   a. Working drawings shall be dimensioned consistently from one side of the face of stud or masonry to the other consistent side of the wall.
   b. All masonry and lumber dimensions shall be nominal dimensions.
   c. Dimension walls and interior partitions from center line of columns. Avoid interior strings of dimensions; only necessary dimensions to construct work and critical dimensions.
2. **Building / Wall Sections**
   a. Reference all vertical dimensions from the Finish Floor elevation. Dimension bearing points or eave heights of major structural components.
   b. Show 12" minimum drop from Finish Floor elevation to exterior finish grade.
3. **Detail Dimensioning**
   a. All masonry and lumber dimensions shall be actual dimensions.
   b. Tie detail components to major building elements like column centerline or structural elements like slab edge, bearing points that installer can use for reference points.

L. Exterior Dimension Strings:

1. Exterior dimension strings, as needed, shall consistently occur, a recommended minimum of ½" apart on 22" x 34" sheets, in the following order beginning with the string located farthest from the plan.

   a. The overall out to out dimension string (taken to outside surface of main internal wall construction material, ie. CMU, metal stud. etc.). Note: Foundation plan out to out dimension shall be taken to the exterior edge of the foundation wall.
   b. The structural column grid string (if internal columns exist) runs from the exterior of the out to out dimension string to the centerline of the structural columns.
   c. The mass dimension string shall run from the exterior of the out to out dimension string to the exterior corner of any projections occurring in the plan.
   d. The opening dimension string shall dimension "rough" or "masonry' openings occurring in the plans for windows and doors and shall not continue from the exterior edges of the out to out dimension string. The dimension string shall originate from either outside corners, or centerlines of columns. The dimension shall include, as applicable, R.O. for rough opening or M.O. for masonry opening. For store front or curtain wall systems, which utilize multiple vertical mullions, the string shall locate the centerline of these mullions within the M.O. or R.O. limits.

M. LAYER NAMING STANDARD:

1. Reuse graphic information by layer management to reduce duplication. The Layer Naming Standards are based on "AIA CAD Layer Standards. The Layer Names are constructed from four individual parts all separated by hyphens. Layer names consist of a single character discipline designator (e.g., "A" for Architectural, "M" for Mechanical etc.), followed by a four character major group layer description.(e.g., "wall" for walls, "DOMW" for domestic water piping systems). followed by a Minor Group layer descriptions up to four characters. (e.g., A-WALL-FULL for full height walls, P-DOMW-CPIP for domestic cold water piping) and if further required followed by a Minor Group Series description up to four Project and any existing structures already onsite characters long. (e.g. A-WALL-FULL-INTR for interior full height walls,A-WALL-FULL-

EXTR for exterior full height walls). Refer to Figure 2 below for a graphical explanation of the AIA CAD Layer Standard convention. Layers are provided on CD; add layers as required following this convention.

Figure 2

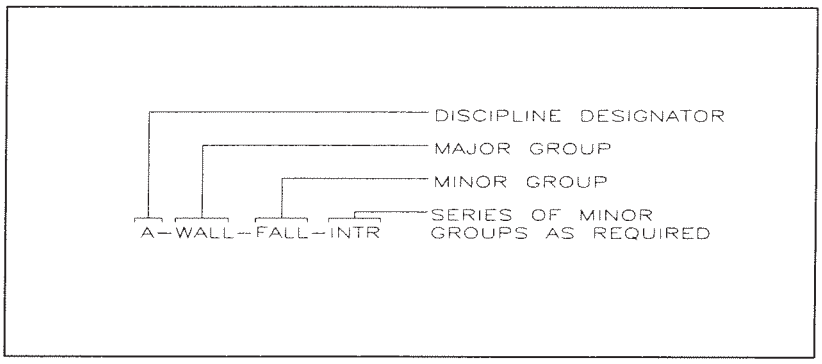

Table 2

REQUIRED LAYERS AND ITEMS FOR CIVIL

NO.	LAYER NAME	DESCRIPTION	COLOR	LINETYPE	LINEWT
0	LAYER 0				
1	DEFPOINTS	NOT TO BE USED			
General Information					
2	C-ANNO-DIMS	Dimension text	RED	Continuous	0.006
3	C-ANNO-KEYN	Reference keynotes with leaders	YELLOW	Continuous	0.012
4	C-ANNO-NPLT	Non-Plotting graphic Information	BLUE	Continuous	Default
5	C-ANNO-PATT	Miscellaneous patterning and hatching	GREEN	Continuous	0.012
6	C-ANNO-NOTE	General notes and general remarks	YELLOW	Continuous	0.012
7	C-ANNO-SYMB	Miscellaneous symbols	MAGENTA	Continuous	0.012
8	C-ANNO-TEXT	Miscellaneous text with leaders	YELLOW	Continuous	0.012
9	C-ANNO-REFR	X_ref Dwgs	WHITE	Continuous	Default
Alignments Information					
10	C-ALGN-DATA	Alignments coordinates and data	GREEN	Continuous	0.012
11	C-ALGN-LINE	Alignments	YELLOW	Continuous	0.012
12	C-ALGN-STAT	Floor outline	WHITE	Continuous	0.020
Buildings and Structures					
15	C-BLDG-OTLN	Buildings and other Structures	WHITE		0.020
16	C-BLDG-IDEN	Building and other structure annotation	9	Continuous	0.012
Site Improvement					
17	C-SITE-FENC	Fences and Handrails	MAGENTA	Continuous	0.012
18	C-SITE-STRC	Site structures	9	Continuous	0.016
19	C-SITE-IDEN	Site Annotation	CYAN	Continuous	0.012
20	C-SITE-IMPR	Site Improvements	CYAN	Continuous	0.024
21	C-SITE-EROS	Riprap, dikes, jetties	RED	Continuous	0.014
22	C-SITE-STRS	Stairs and Ramp	MAGENTA	Continuous	0.012
23	C-SITE-WALK	Walks, trails and paths	BLUE	Continuous	0.012

Property					
27	C-PROP-ESMT	Easement	BLUE	Continuous	0.028
28	C-PROP-CONS	Construction limits	WHITE	Continuous	0.014
28	C-PROP-RWAY	Right of Way	CYAN	Continuous	0.012
29	C-PROP-IDEN	Property Annotation	RED	Continuous	0.012
Storm Drainage					
30	C-STRM-STRC	Storm drainage structures	MAGENTA	Continuous	0.028
31	C-STRM-IDEN	Storm drainage structures annotation	GREEN	Continuous	0.012
Pavement					
32	C-PVMT-ROAD	Roads, parking lots, railroads	RED	Continuous	0.016
33	C-PVMT-ANNO	Roads, parking lots, railroads annotation	GREEN	Continuous	0.012
34	C-PVMT-PATT	Joint patterns, text and dimensions	GREEN	Continuous	0.010
35	C-PVMT-MRKG	Pavement markings and signs	CYAN	Continuous	0.010
Topography					
36	C-TOPO-COOR	Coordinate grid ticks and text	YELLOW	Continuous	0.012
37	C-TOPO-MAJR-ANNO	Major contours annotation	CYAN	Continuous	0.010
38	C-TOPO-MAJR	Major contours	GREEN	Continuous	0.016
39	C-TOPO-MINR	Minor contours	YELLOW	Continuous	0.006
40	C-TOPO-MINR-ANNO	Minor contours - Annotation	CYAN	Continuous	0.012
41	C-TOPO-SLOP-FILL	Cut / Fill slope	MAGENTA	Continuous	0.012
42	C-TOPO-SLOP-ANNO	Cut / Fill slope Annotation	CYAN	Continuous	0.012
43	C-TOPO-SPOT	Spot elevations	YELLOW	Continuous	0.008
44	C-TOPO-TOPT	Top / Toe slopes	MAGENTA	Continuous	0.008

Table 3

REQUIRED LAYERS AND ITEMS FOR ARCHITECTURAL

NO.	LAYER NAME	DESCRIPTION	COLOR	LINETYPE	LINEWT
0	LAYER 0				
1	DEFPOINTS		NOT TO BE USED		
General Information					
2	A-ANNO-DIMS	Dimension text	RED	Continuous	0.008
3	A-ANNO-KEYN	Reference keynotes with leaders	YELLOW	Continuous	0.012
4	A-ANNO-NPLT	Non-Plotting graphic Information	BLUE	Continuous	0.012
5	A-ANNO-PATT	Miscellaneous patterning and hatching	GREEN	Continuous	0.006
6	A-ANNO-NOTE	General notes and general remarks	YELLOW	Continuous	0.012
7	A-ANNO-SYMB	Miscellaneous symbols	MAGENTA	Continuous	0.012
8	A-ANNO-TEXT	Miscellaneous text with leaders	YELLOW	Continuous	0.012
9	A-ANNO-REFR	X_ref Dwgs	WHITE	Continuous	Default
Floor Information					
10	A-FLOR-IDEN	Room Name	GREEN	Continuous	0.012
11	A-FLOR-NUMB	Room/Space identification number	GREEN	Continuous	0.012
12	A-FLOR-OTLN	Floor outline	WHITE	Continuous	0.020
13	A-FLOR-SPCL	Architectural Specialties	GREEN	Continuous	0.012
14	A-FLOR-PATT	Paving, tile, carpet patterns	16	Continuous	0.006
Columns					
15	A-ANNO-GRID	Grid notation	15	Center	0.006
16	A-COLS	Column	9	Continuous	0.018
Walls					
17	A-WALL-CAVI	Cavity wall lines	RED	Continuous	0.012
18	A-WALL-CNTR	Wall centerlines	9	Center 2	0.008
19	A-WALL-CWMG	Curtain wall mullions and glass	RED	Continuous	0.010
20	A-WALL-FULL	Full height walls	WHITE	Continuous	0.016
21	A-WALL-FIRE	Fire wall designators	YELLOW	Continuous	0.010
22	A-WALL-IDEN	Wall identification/type text or tags	GREEN	Continuous	0.012
23	A-WALL-MOVE	Moveable walls/ partitions	BLUE	Continuous	0.008
24	A-WALL-PATT	Wall insulation, hatching, fill	14	Continuous	0.006
25	A-WALL-PRHT	Partial height walls	RED	Continuous	0.008
26	A-WALL-SPCL	Wall-hung / attached specialties	RED	Continuous	0.012
Openings					
27	A-GLAZ-SILL	Window sills	BLUE	Continuous	0.008
28	A-WALL-HEAD	Door and window headers	CYAN	Continuous	0.012
29	A-WALL-JAMB	Door and window jambs	RED	Continuous	0.012
Doors					
30	A-DOOR-FULL	Full height door floor to ceiling	MAGENTA	Continuous	0.008
31	A-DOOR-IDEN	Door number and symbol	GREEN	Continuous	0.010
32	A-DOOR-PRHT	Partial height door, swing and leaf	GREEN	Continuous	0.014
33	A-DOOR-SYMB	Miscellaneous Door symbols	RED	Continuous	0.010
Windows					
34	A-GLAZ-FULL	Full height glazed walls	RED	Continuous	0.012
35	A-GLAZ-IDEN	Window number and symbol	GREEN	Continuous	0.010

36	A-GLAZ-PRHT	Window and partial height partitions	RED	Continuous	0.012
Plumbing Fixtures					
37	A-FLOR-FIXT	Plumbing fixtures	MAGENTA	Continuous	0.012
38	A-FLOR-TPTN	Toilet partitions	RED	Continuous	0.008
Elevators					
39	A-FLOR-EVTR	Elevator cars and equipment	CYAN	Continuous	0.010
Stairs					
40	A-FLOR-STRS	Stair risers / treads / ladders	YELLOW	Continuous	0.014
41	A-FLOR-HRAL	Stair handrails, guard rails	RED	Continuous	0.006
Woodwork					
42	A-FLOR-CASE	Casework (manufactured)	CYAN	Continuous	0.010
43	A-FLOR-WDWK	Architectural woodwork	GREEN	Continuous	0.012
Ceiling Penetrations					
44	A-FLOR-OVHD	Overhead items	CYAN	Continuous	0.010
Ceiling Information					
45	A-CLNG-ACCS	Access panels	MAGENTA	Continuous	0.024
46	A-CLNG-CTLJ	Ceiling control joints	YELLOW	Continuous	0.016
47	A-CLNG-GRID	Ceiling grid	RED	Continuous	0.008
48	A-CLNG-OPEN	Openings, ceiling / roof penetrations	GREEN	Continuous	0.021
49	A-CLNG-PATT	Ceiling patterns	WHITE	Continuous	0.014
50	A-CLNG-TEES	Main Tees	BLUE	Continuous	0.012
51	A-CLNG-SUSP	Suspended elements, fans	MAGENTA	Continuous	0.014
Lights					
52	A-LITE-CLGN	Specialty lights not shown on Electrical Plan	CYAN	Continuous	0.028
Roof Information					
53	A-ROOF-CRTS	Crickets flow arrows flow info	RED	Continuous	0.012
54	A-ROOF-RFDR	Roof Drains	RED	Continuous	0.014
55	A-ROOF-GUTR	Roof internal gutters	GREEN	Continuous	0.010
56	A-ROOF-EXPJ	Expansion joints	BLUE	Continuous	0.006
57	A-ROOF-HRAL	Stair handrails, nosings, guard rails	RED	Continuous	0.008
58	A-ROOF-LEVL	Level changes	BLUE	Continuous	0.012
59	A-ROOF-OTLN	Roof perimeter / edge, roof geometry	MAGENTA	Continuous	0.020
60	A-ROOF-PATT	Roof surface patterns, hatching	RED	Continuous	0.006
61	A-ROOF-SPCL	Roof specialties, accessories	GREEN	Continuous	0.008
62	A-ROOF-STRS	Stair risers / treads, ladders	BLUE	Continuous	0.012
63	A-ROOF-WALK	Roof Walkways	GREEN	Continuous	0.012
64	A-ROOF-WALL	Parapet walls and wall caps	YELLOW	Continuous	0.016
Elevations					
65	A-ELEV-CASE	Casework	GREEN	Continuous	0.012
66	A-ELEV-FIXT	Miscellaneous fixtures	YELLOW	Continuous	0.016
67	A-ELEV-FNSH	Finishes, woodwork, trim	GREEN	Continuous	0.010
68	A-ELEV-IDEN	Component identification numbers	CYAN	Continuous	0.010
69	A-ELEV-OTLN	Building outlines	RED	Continuous	0.020
70	A-ELEV-PATT	Textures and hatch patterns	BLUE	Continuous	0.006
71	A-ELEV-PFIX	Plumbing fixtures	MAGENTA	Continuous	0.012
72	A-ELEV-SIGN	Signage	MAGENTA	Continuous	0.010

Table 4

REQUIRED LAYERS AND ITEMS FOR STRUCTURAL

NO.	LAYER NAME	DESCRIPTION	COLOR	LINETYPE	LINEWT
0	LAYER 0				
1	DEFPOINTS		NOT TO BE USED		
General Information					
2	S-ANNO-DIMS	Dimension text	RED	Continuous	0.008
3	S-ANNO-KEYN	Reference keynotes with leaders	YELLOW	Continuous	0.012
4	S-ANNO-NPLT	Non-Plotting graphic Information	BLUE	Continuous	0.012
5	S-ANNO-PATT	Miscellaneous patterning and hatching	8	Continuous	0.000
6	S-ANNO-NOTE	General notes and general remarks	YELLOW	Continuous	0.012
7	S-ANNO-SYMB	Miscellaneous symbols	MAGENTA	Continuous	0.012
8	S-ANNO-TEXT	Miscellaneous text with leaders	YELLOW	Continuous	0.012
9	S-ANNO-REFR	X_ref Dwgs	WHITE	Continuous	Default
Floor Information					
10	S- FOUN-OTLN	Foundation outline	WHITE	Continuous	0.016
11	S-BEAM-GB	Foundation grade beam outline	GREEN	Dashed	0.012
12	S-SPRE-FOOT	Spread footing outline	CYAN	Continuous	0.006
13	S-ABLT	Anchor bolts	YELLOW	Continuous	0.005
14	S-COLS	Column	BLUE	Continuous	Default
15	S-PLAT	Base plate	CYAN	Continuous	0.005
16	S-GRID	Column grid, text and symbol	15	Center 2	0.008
Section Details					
17	S-CONC-BSEC	Concrete beam sections	WHITE	Continuous	Default
18	S-RBAR	Concrete steel reinforcement	YELLOW	Dashed	0.006
19	S-VAPO-BARR	Plastic vapor barrier	RED	Continuous	Default
Roof Framing					
20	S-ROOF-FRAM	Structural steel frames and beams	WHITE	Dashed	0.006
21	S-ROOF-PURL	Roof purlin	CYAN	Continuous	0.004
22	S-PARI-PURL	Roof perimeter purlin	BLUE	Continuous	0.012

Table 5

REQUIRED LAYERS AND ITEMS FOR MECHANICAL

NO.	LAYER NAME	DESCRIPTION	COLOR	LINETYPE	LINEWT
1	LAYER 0	Nothing Should Stay On This Layer			
2	DEFPOINTS	Do Not Use This Layer			
3	M-ANNO-REFR	Place X-REFS On This Layer	WHITE	Continuous	DEFAULT
4	M-ANNO-NPLT	Design Notes Non-Printing Layer / View ports	252	Continuous	0.012"
5	M-COND	Condensers/Outdoor Units	120	Continuous	0.008"
6	M-COND-IDEN	Equipment Label For M-COND	61	Continuous	0.004"
7	M-EFAN	E-Fan Above Conditioned Space	53	Continuous	0.008"
8	M-EFAN-IDEN	Equipment Label For M-EFAN	71	Continuous	0.004"
9	M-EFAN-WELD	Welding/Auto Exhaust Fan	52	Continuous	0.008"
10	M-EFAN-WELD-IDEN	E-Fan Label For M-EFAN-WELD	74	Continuous	0.004"
11	M-FIRE-DAMP	FIRE DAMPERS	RED	Continuous	0.008"
12	M-FIRE-DAMP-IDEN	EQPT Label For M_FIRE-DAMP	53	Continuous	0.004"
13	M-FURN	Indoor Air Handlers/Furnaces	YELLOW	Continuous	0.008"
14	M-FURN-IDEN	Equipment Label For M-FURN	120	Continuous	0.004"
15	M-HEAT	Unit Heaters / Infrared Heaters	40	Continuous	0.010"
16	M-HEAT-IDEN	EQPT Label For M-HEAT-IDEN	31	Continuous	0.004"
17	M-HVAC-CDFF	Grilles/ Registers in Ceiling	MAGENTA	Center	0.008"
18	M-HVAC-SUPP	Supply Air Duct	GREEN	Continuous	0.008"
19	M-HVAC-WDFF	Louvers/Grilles/ Registers in Wall	61	Continuous	0.012"
20	M-HVAC-WDFF-IDEN	Device Label For M-HVAC-WDFF	31	Center 2	0.004"
21	M-PENE-ROOF	Show Roof Penetration Holes	WHITE	Continuous	0.008"
22	M-ROOF-EFAN	Exhaust Fan Located On Roof	74	Continuous	0.008"
23	M-ROOF-EFAN-IDEN	EQPT Label For M-ROOF-EFAN	74	Continuous	0.004"
24	M-ROOF-EQPM	Barometric Relief Dampers, Misc.	YELLOW	Continuous	0.008"
25	M-ROOF-EQPM-IDEN	EQPT Label For M-ROOF-EQPM	231	Continuous	0.004"
26	M-ROOF-LDET-EFAN	Leak Detection EFAN on Roof	55	Continuous	0.008"
27	M-ROOF-LDET-EFAN-IDEN	EQPT for M-ROOF-LDET-EFAN	21	Continuous	0.004"
28	M-THER-120V	120 Volt Thermostat W/ Label	142	Continuous	0.004"
29	M-THER-24V	24 Volt Thermostat	YELLOW	Continuous	0.006"
30	M-THER-24V-IDEN	T-Stat Label for M-THER-24V	211	Continuous	0.004"

31	M-ANNO-KEYN	Keyed Notes in Plan	WHITE	Continuous	0.006"
32	M-ANNO-NOTE	Paper space Notes / Duct Sizes	YELLOW	Continuous	0.006"
33	M-COND-PIPE	Condensate Piping	YELLOW	Condensate2	0.002"
34	M-DETL-TAGS	Detail Call Outs In Plan	243	Continuous	0.004"
35	M-HVAC-EXHS	Exhaust Air Duct	74	Continuous	0.004"
36	M-HVAC-RETN	Return Air Duct	BLUE	Continuous	0.016"
37	M-HVAC-TAGS	Grille/Louver/Register Labels	CYAN	Continuous	0.004"
38	M-REFG-PIPE	Refrigerant Piping	RED	Refrigerant2	0.004"
39	M-VIEW-SCAL	Graphical Scale	YELLOW	Continuous	0.004"

Table 6

REQUIRED LAYERS AND ITEMS FOR ELECTRICAL

NO.	LAYER NAME	DESCRIPTION	COLOR	LINETYPE	LINEWT
1	LAYER 0	Nothing Should Stay On This Layer			
2	DEFPOINTS	Do Not Use This Layer			
3	E-ANNO-REFR	Place X-REFS On This Layer	WHITE	Continuous	DEFAULT
4	E-ANNO-NPLT	Design Notes Non-Printing Layer / View ports	252	Continuous	0.012"
5	E-DATA-EQPM	Backboard/Voice Data Rack	YELLOW	Voice_Data	0.010"
6	E-DATA-JACK	Voice Data Outlets	41	Continuous	0.006"
7	E-EQPM-GDET	LPG Panel/Sirens/Sensors	41	Continuous	0.006"
8	E-EQPM-IDEN	Label for Switchgear & Consoles	241	Continuous	0.004"
9	E-LITE-FIXT	Lighting Fixtures/Exit/Emergency	CYAN	Continuous	0.008"
10	E-LITE-IDEN	Fixture Label for E-LITE	241	Continuous	0.004"
11	E-POWR-CIRC	Power Pole Symbols/ Gen Set / Transformer Label	MAGENTA	Continuous	0.012"
12	E-POWR-GENR	Emergency Generator w/ Pad	83	Continuous	0.012"
13	E-POWR-PANL	Switchgear	GREEN	Continuous	0.014"
14	E-POWR-WALL	Wall Outlets	MAGENTA	Continuous	0.006"
15	E-SPCL-PANL	Irrigation Panel, Misc.	140	Continuous	0.008"
16	E-TRAN-PADM	Pad Mounted Transformer	74	Continuous	0.012"
17	E-ANNO-NOTE	Paper space Notes	YELLOW	Continuous	0.006"
18	E-LITE-CIRC	Light Branch Circuits/Switches	WHITE	Continuous	0.004"
19	E-LITE-KEYN	Lighting Keyed Notes	40	Continuous	0.006"
20	E-POWR-FEED	Feeders Entering and Leaving Bldg. Exterior Service	21	U-Ground-Electric2	0.005"
21	E-POWR-GDET	Gas Detection Circuits Keyed Notes and Plan Notes	52	Continuous	0.006"
22	E-POWR-KEYN	Power Keyed Notes	60	Continuous	0.006"
23	E-POWR-TAGS	Detail Call Outs In Plan	75	Continuous	0.004"
24	E-TELE-KEYN	Keyed Notes For Enlarged Hub Room	121	Continuous	0.006"
25	E-VIEW-SCAL	Graphical Scale	YELLOW	Continuous	0.004"

Table 7

REQUIRED LAYERS AND ITEMS FOR PLUMBING

NO.	LAYER NAME	DESCRIPTION	COLOR	LINETYPE	LINEWT
`	LAYER 0	Nothing Should Stay On This Layer			
2	DEFPOINTS	Do Not Use This Layer			
3	P-ANNO-REFR	Place X-REFS On This Layer	WHITE	Continuous	DEFAULT
4	P-ANNO-NPLT	Design Notes Non-Printing Layer / View ports	252	Continuous	0.012"
5	P-ACCS-PANL	Access Panels	MAGENTA	Continuous	0.012"
6	P-CMPA-EQPM	Air Compressor and Oil Separator	YELLOW	Continuous	0.005"
7	P-CMPA-EQPM-IDEN	Equipment Label For P-CMPA-EQPM	43	Continuous	0.004"
8	P-CMPA-PIPE	Compressed Air Piping & Disconnects	MAGENTA	COMP_AIR2	0.002"
9	P-DOMW-CWS	Domestic Cold Water Supply	BLUE	D-Water_SupplyX2	0.006"
10	P-DOMW-EQPM	Water Boxes/ Washing Machine Box	YELLOW	Continuous	0.006"
11	P-DOMW-HWS	Domestic Hot Water Supply	RED	H-Water_SupplyX2	0.005"
12	P-FUEL-NGAS	Natural Gas Piping	RED	Nat._Gas	0.002"
13	P-PENE-ROOF	Show Roof Penetration Holes	WHITE	Continuous	0.008"
14	P-SANR-FLDR	Floor Sinks For Condensate	GREEN	Continuous	0.008"
15	P-SANR-SEWR	Sanitary Sewer Piping	GREEN	Continuous	0.008"
16	P-SANR-VENT	Sanitary Vent Piping	CYAN	Continuous	0.004"
17	P-WHTR	Water Heater	YELLOW	Center	0.008"
18	P-WHTR-IDEN	Water Heater Label for P-WHTR	31	Continuous	0.004"
19	P-ANNO-KEYN	Keyed Notes in Plan	WHITE	Continuous	0.006"
20	P-ANNO-NOTE	Paper space Notes/ Fixture Labels/ Flow Line Notes	YELLOW	Continuous	0.006"
21	P-ANNO-NPLT-RISR	Design Notes Non-Printing Layer	MAGENTA	Continuous	0.012"
22	P-DETL-TAGS	Detail Call Outs In Plan	243	Continuous	0.004"
23	P-RISER-CWS	Riser Cold Water Piping	BLUE	D-Water-SupplyX2	0.004"
24	P-RISER-HWS	Riser Hot Water Piping	RED	H-Water-SupplyX2	0.007"
25	P-RISER-NOTE	Riser Notes	YELLOW	Continuous	0.002"
26	P-RISER-SANR	Riser Sanitary Piping	GREEN	Continuous	0.007"
27	P-RISER-VENT	Riser Vent Piping	CYAN	Dashed2	0.004"
28	P-VIEW-SCAL	Graphical Scale	YELLOW	Continuous	0.004"

ATTACHMENT C
Wage Rates (Building and Highways)

TARRANT, PALO PINTO, HOOD AND SOMERVELL COUNTIES

THIS PAGE LEFT BLANK INTENTIONALLY

INFORMATION AVAILABLE ONLY BY INTERNET OR DISC

http://www.dot.state.tx.us/mnt/contract/rfp.htm

Prevailing Wage Schedule

TARRANT COUNTY PREVAILING WAGE SCHEDULE
GENERAL DECISION: TX20100059 08/13/2010 TX59
Date: August 13, 2010
General Decision Number: TX20100059 08/13/2010
Superseded General Decision Number: TX20080059
State: Texas
Construction Type: Building
Counties: Johnson, Parker and Tarrant Counties in Texas.

BUILDING CONSTRUCTION PROJECTS (does not include single family homes and apartments up to and including 4 stories). Use current heavy and highway General Wage Determination for Paving Incidental to Building Construction in Tarrant County and for Paving and Utilities incidental to Building Construction in remaining Counties.)

Modification Number	Publication Date
0	03/12/2010
1	03/26/2010
2	04/02/2010
3	06/04/2010
4	08/13/2010

BRTX0001-007 05/01/2009

	Rates	Fringes
BRICKLAYER	$ 21.06	6.93

CARP1421-001 04/01/2010

	Rates	Fringes
MILLWRIGHT	$ 23.85	7.25

ELEC0020-004 06/01/2010

	Rates	Fringes
Electricians:		
Cable Splicer	$ 26.41	4.50+12.5%
Electrician	$ 24.25	4.50+12.5%

IRON0263-001 06/01/2009

	Rates	Fringes
IRONWORKER (Structural)	$ 21.60	4.40

* SFTX0669-001 04/01/2010

	Rates	Fringes
SPRINKLER FITTER (Fire Sprinklers)	$ 25.40	15.85

SUTX1989-001 11/01/1989

	Rates	Fringes
Acoustical Installer	$ 11.23	
CARPENTER		
(Excluding drywall hangers, acoustical installers & batt insulators)	$ 12.27	2.22

doing drywall hanging only..	$ 10.00	
CEMENT MASON/CONCRETE FINISHER...	$ 10.16	.76
DRYWALL FINISHER/TAPER.....	$ 11.18	2.21
GLAZIER.....	$ 11.37	1.31
LABORER (Including Mason Tenders & Pipelayers).....	$ 7.46	1.00
Landscape Laborer.....	$ 7.25	
Mechanical Insulator.....	$ 10.92	1.00
PAINTER (Brush and Spray) (excluding Drywall Finishing)....	$ 10.47	2.21
PLASTERER.....	$ 11.50	
Plumbers and Pipefitters (Including HVAC work).....	$ 13.34	2.15
Power equipment operators:		
Backhoes.....	$ 12.30	1.82
Cranes.....	$ 14.26	2.44
Foundation Drill Operators..	$ 8.54	
Graders.....	$ 11.69	1.80
ROOFER, Including Built Up, Composition and Single Ply Roofs.....	$ 9.50	.99
Sheet metal worker (Including HVAC Duct Work).....	$ 12.63	2.10

WELDERS - Receive rate prescribed for craft performing operation to which welding is incidental.

WELDERS - Receive rate prescribed for craft performing operation to which welding is incidental.

==========

Unlisted classifications needed for work not included within the scope of the classifications listed may be added after award only as provided in the labor standards contract clauses (29CFR 5.5 (a) (1) (ii)).

In the listing above, the "SU" designation means that rates listed under the identifier do not reflect collectively bargained wage and fringe benefit rates. Other designations indicate unions whose rates have been determined to be prevailing.

WAGE DETERMINATION APPEALS PROCESS

1.) Has there been an initial decision in the matter? This can be:

* an existing published wage determination
* a survey underlying a wage determination
* a Wage and Hour Division letter setting forth a position on a wage determination matter
* a conformance (additional classification and rate) ruling

On survey related matters, initial contact, including requests for summaries of surveys, should be with the Wage and Hour Regional Office for the area in which the survey was conducted because those Regional Offices have responsibility for the Davis-Bacon survey program. If the response from this initial contact is not satisfactory, then the process described in 2.) and 3.) should be followed.

With regard to any other matter not yet ripe for the formal process described here, initial contact should be with the Branch of Construction Wage Determinations. Write to:

Branch of Construction Wage Determinations
Wage and Hour Division
U.S. Department of Labor
200 Constitution Avenue, N.W.
Washington, DC 20210

2.) If the answer to the question in 1.) is yes, then an interested party (those affected by the action) can request review and reconsideration from the Wage and Hour Administrator (See 29 CFR Part 1.8 and 29 CFR Part 7). Write to:

Wage and Hour Administrator
U.S. Department of Labor
200 Constitution Avenue, N.W.
Washington, DC 20210

The request should be accompanied by a full statement of the interested party's position and by any information (wage payment data, project description, area practice material, etc.) that the requestor considers relevant to the issue.

3.) If the decision of the Administrator is not favorable, an interested party may appeal directly to the Administrative Review Board (formerly the Wage Appeals Board). Write to:

Administrative Review Board
U.S. Department of Labor
200 Constitution Avenue, N.W.
Washington, DC 20210

4.) All decisions by the Administrative Review Board are final.

==========

END OF GENERAL DECISION

Prevailing Wage Schedule

PALO PINTO COUNTY PREVAILING WAGE SCHEDULE
GENERAL DECISION: TX20100284 08/13/2010 TX284

Date: August 13, 2010
General Decision Number: TX20100284 08/13/2010
Superseded General Decision Number: TX20080284
State: Texas
Construction Type: Building
Counties: Palo Pinto and Panola Counties in Texas.

BUILDING CONSTRUCTION PROJECTS (does not include single family homes or apartments up to and including 4 stories).

Modification Number	Publication Date
0	03/12/2010
1	08/13/2010

ASBE0021-004 05/01/2009

	Rates	Fringes
Heat and Frost Insulator/Asbestos Worker	$ 18.74	6.93

* BOIL0074-004 08/08/2010
Palo Pinto

	Rates	Fringes
Boilermaker	$ 25.95	16.88

BOIL0587-004 08/08/2008
Panola County

	Rates	Fringes
Boilermaker	$ 22.77	13.27

IRON0263-017 06/01/2008

	Rates	Fringes
Ironworker, reinforcing	$ 20.90	4.60

LABO0154-022 05/01/2008

	Rates	Fringes
Laborers: (Mason Tender - Cement/Concrete)	$ 14.25	2.90

SUTX2009-105 04/20/2009

	Rates	Fringes
BRICKLAYER	$ 20.00	0.00
CARPENTER, Including Acoustical Ceiling Installation and Floor Layer: Hardwood Floors	$ 14.30	0.00
CEMENT MASON/CONCRETE FINISHER	$ 13.29	0.00
ELECTRICIAN	$ 18.06	4.87
IRONWORKER, STRUCTURAL	$ 15.48	0.00
LABORER: Common or General	$ 9.73	0.00

LABORER: Landscape and Irrigation	$ 8.50	0.22
LABORER: Mason Tender - Brick	$ 12.02	0.00
LABORER: Mortar Mixer	$ 12.00	0.00
OPERATOR: Backhoe/Excavator/Trackhoe	$ 11.00	0.00
OPERATOR: Bulldozer	$ 13.00	0.31
OPERATOR: Crane	$ 21.33	0.00
OPERATOR: Forklift	$ 14.58	0.00
OPERATOR: Front End Loader	$ 10.54	0.00
PAINTER: Brush, Roller, and Spray	$ 13.50	0.00
PLUMBER	$ 20.38	4.74
ROOFER	$ 13.64	1.80
SHEETMETAL WORKER	$ 17.00	0.00
TILE SETTER	$ 15.00	0.00
TRUCK DRIVER	$ 12.52	0.00

WELDERS - Receive rate prescribed for craft performing operation to which welding is incidental.

Unlisted classifications needed for work not included within the scope of the classifications listed may be added after award only as provided in the labor standards contract clauses (29 CFR 5.5(a)(1)(ii)).

In the listing above, the "SU" designation means that rates listed under the identifier do not reflect collectively bargained wage and fringe benefit rates. Other designations indicate unions whose rates have been determined to be prevailing.

WAGE DETERMINATION APPEALS PROCESS

1.) Has there been an initial decision in the matter? This can be:

* an existing published wage determination
* a survey underlying a wage determination
* a Wage and Hour Division letter setting forth a position on a wage determination matter
* a conformance (additional classification and rate) ruling

On survey related matters, initial contact, including requests for summaries of surveys, should be with the Wage and Hour Regional Office for the area in which the survey was conducted because those Regional Offices have responsibility for the Davis-Bacon survey program. If the response from this initial contact is not satisfactory, then the process described in 2.) and 3.) should be followed.

With regard to any other matter not yet ripe for the formal process described here, initial contact should be with the Branch of Construction Wage Determinations. Write to:

Branch of Construction Wage Determinations
Wage and Hour Division
U.S. Department of Labor
200 Constitution Avenue, N.W.
Washington, DC 20210

2.) If the answer to the question in 1.) is yes, then an interested party (those affected by the action) can request review and reconsideration from the Wage and Hour Administrator (See 29 CFR Part 1.8 and 29 CFR Part 7). Write to:

Wage and Hour Administrator
U.S. Department of Labor
200 Constitution Avenue, N.W.

Washington, DC 20210

The request should be accompanied by a full statement of the interested party's position and by any information (wage payment data, project description, area practice material, etc.) that the requestor considers relevant to the issue.

3.) If the decision of the Administrator is not favorable, an interested party may appeal directly to the Administrative Review Board (formerly the Wage Appeals Board). Write to:

Administrative Review Board
U.S. Department of Labor
200 Constitution Avenue, N.W.
Washington, DC 20210

4.) All decisions by the Administrative Review Board are final.

END OF GENERAL DECISION

Prevailing Wage Schedule

SOMERVELL COUNTY PREVAILING WAGE SCHEDULE

GENERAL DECISION: TX20100272 08/13/2010 TX272
Date: August 13, 2010
General Decision Number: TX20100272 08/13/2010
Superseded General Decision Number: TX20080272
State: Texas
Construction Type: Building
Counties: Henderson, Hill and Somervell Counties in Texas.

BUILDING CONSTRUCTION PROJECTS (does not include single family homes or apartments up to and including 4 stories).

Modification Number	Publication Date
0	03/12/2010
1	08/13/2010

ASBE0021-004 05/01/2009

	Rates	Fringes
Heat and Frost Insulator/Asbestos Worker	$ 18.74	6.93

* BOIL0074-008 08/08/2010
Hill and Somervell Counties

	Rates	Fringes
Boilermaker	$ 25.95	16.88

BOIL0587-006 08/08/2008
Henderson County

	Rates	Fringes
Boilermaker	$ 22.77	13.27

IRON0263-018 06/01/2008
Henderson and Somervell Counties

	Rates	Fringes
Ironworker, reinforcing	$ 20.90	4.60

IRON0482-005 06/01/2008
Hill County

	Rates	Fringes
IRONWORKER, REINFORCING	$ 18.95	4.90

LABO0154-022 05/01/2008

	Rates	Fringes
Laborers: (Mason Tender - Cement/Concrete)	$ 14.25	2.90

SUTX2009-093 04/20/2009

	Rates	Fringes
BRICKLAYER	$ 20.00	0.00

CARPENTER, Including

```
Acoustical Ceiling
Installation and Floor Layer:
 Hardwood Floors.................$ 14.30            0.00

CEMENT MASON/CONCRETE FINISHER...$ 13.29            0.00
ELECTRICIAN.....................$ 18.06            4.87
IRONWORKER, STRUCTURAL..........$ 15.48            0.00
LABORER:  Common or General.....$  9.73            0.00
LABORER:  Landscape and
Irrigation......................$  8.50            0.22
LABORER:  Mason Tender - Brick...$ 12.02           0.00
LABORER:  Mortar Mixer..........$ 12.00            0.00
OPERATOR:
Backhoe/Excavator/Trackhoe.....$ 11.00             0.00
OPERATOR:  Bulldozer............$ 13.00            0.31
OPERATOR:  Crane................$ 21.33            0.00
OPERATOR:  Forklift.............$ 14.58            0.00
OPERATOR:  Front End Loader.....$ 10.54            0.00
PAINTER:  Brush, Roller and
Spray...........................$ 13.50            0.00
PLUMBER.........................$ 20.38            4.74
ROOFER..........................$ 13.64            1.80
SHEETMETAL WORKER...............$ 17.00            0.00
TILE SETTER.....................$ 15.00            0.00
TRUCK DRIVER....................$ 12.52            0.00
```

WELDERS - Receive rate prescribed for craft performing operation to which welding is incidental.

==========

Unlisted classifications needed for work not included within the scope of the classifications listed may be added after award only as provided in the labor standards contract clauses (29 CFR 5.5(a)(1)(ii)).

In the listing above, the "SU" designation means that rates listed under the identifier do not reflect collectively bargained wage and fringe benefit rates. Other designations indicate unions whose rates have been determined to be prevailing.

WAGE DETERMINATION APPEALS PROCESS

1.) Has there been an initial decision in the matter? This can be:

* an existing published wage determination
* a survey underlying a wage determination
* a Wage and Hour Division letter setting forth a position on a wage determination matter
* a conformance (additional classification and rate) ruling

On survey related matters, initial contact, including requests for summaries of surveys, should be with the Wage and Hour Regional Office for the area in which the survey was conducted because those Regional Offices have responsibility for the Davis-Bacon survey program. If the response from this initial contact is not satisfactory, then the process described in 2.) and 3.) should be followed.

With regard to any other matter not yet ripe for the formal process described here, initial contact should be with the Branch of Construction Wage Determinations. Write to:

Branch of Construction Wage Determinations
Wage and Hour Division
U.S. Department of Labor
200 Constitution Avenue, N.W.
Washington, DC 20210

2.) If the answer to the question in 1.) is yes, then an interested party (those affected by the action) can request review and reconsideration from the Wage and Hour Administrator (See 29 CFR Part 1.8 and 29 CFR Part 7). Write to:

Wage and Hour Administrator
U.S. Department of Labor
200 Constitution Avenue, N.W.
Washington, DC 20210

The request should be accompanied by a full statement of the interested party's position and by any information (wage payment data, project description, area practice material, etc.) that the requestor considers relevant to the issue.

3.) If the decision of the Administrator is not favorable, an interested party may appeal directly to the Administrative Review Board (formerly the Wage Appeals Board). Write to:

Administrative Review Board
U.S. Department of Labor
200 Constitution Avenue, N.W.
Washington, DC 20210

4.) All decisions by the Administrative Review Board are final.

END OF GENERAL DECISION

Prevailing Wage Schedule

HOOD COUNTY PREVAILING WAGE SCHEDULE

GENERAL DECISION: TX20100219 08/13/2010 TX219
Date: August 13, 2010
General Decision Number: TX20100219 08/13/2010
Superseded General Decision Number: TX20080219
State: Texas
Construction Type: Building
County: Hood County in Texas.

BUILDING CONSTRUCTION PROJECTS (does not include single family homes or apartments up to and including 4 stories).

Modification Number	Publication Date
0	03/12/2010
1	08/13/2010

ASBE0021-002 05/01/2009

	Rates	Fringes
ASBESTOS WORKER/HEAT & FROST INSULATOR	$ 18.74	6.93

---

* BOIL0074-005 08/08/2010

	Rates	Fringes
Boilermaker	$ 25.95	16.88

IRON0263-019 06/01/2008

	Rates	Fringes
Ironworker, reinforcing and Structural	$ 20.90	4.60

LABO0154-022 05/01/2008

	Rates	Fringes
Laborers: (Mason Tender - Cement/Concrete)	$ 14.25	2.90

SUTX2009-040 04/20/2009

	Rates	Fringes
BRICKLAYER	$ 20.00	0.00
CARPENTER, Including Acoustical Ceiling Installation and Floor Layer: Hardwood Floors	$ 14.30	0.00
CEMENT MASON/CONCRETE FINISHER	$ 13.29	0.00
ELECTRICIAN	$ 18.06	4.87
IRONWORKER, STRUCTURAL	$ 15.48	0.00
LABORER: Common or General	$ 10.24	0.00
LABORER: Landscape and Irrigation	$ 8.50	0.22
LABORER: Mason Tender - Brick	$ 12.02	0.00

```
LABORER:  Mortar Mixer..........$ 12.00            0.00
OPERATOR:
Backhoe/Excavator/Trackhoe.....$ 11.00            0.00
OPERATOR:  Bulldozer............$ 13.00            0.31
OPERATOR:  Crane................$ 21.33            0.00
OPERATOR:  Forklift............$ 14.58            0.00
OPERATOR:  Front End Loader.....$ 10.54            0.00
PAINTER:  Brush, Roller, and
Spray..........................$ 13.50            0.00
PLUMBER........................$ 20.38            4.74
ROOFER.........................$ 13.64            1.80
SHEETMETAL WORKER..............$ 17.00            0.00
TILE SETTER....................$ 15.00            0.00
TRUCK DRIVER...................$ 12.52            0.00
```

WELDERS - Receive rate prescribed for craft performing peration to which welding is incidental.

==========

Unlisted classifications needed for work not included within the scope of the classifications listed may be added after award only as provided in the labor standards contract clauses (29 CFR 5.5(a)(1)(ii)).

In the listing above, the "SU" designation means that rates listed under the identifier do not reflect collectively bargained wage and fringe benefit rates. Other designations indicate unions whose rates have been determined to be prevailing.

WAGE DETERMINATION APPEALS PROCESS

1.) Has there been an initial decision in the matter? This can be:

* an existing published wage determination
* a survey underlying a wage determination
* a Wage and Hour Division letter setting forth a position on a wage determination matter
* a conformance (additional classification and rate) ruling

On survey related matters, initial contact, including requests for summaries of surveys, should be with the Wage and Hour Regional Office for the area in which the survey was conducted because those Regional Offices have responsibility for the Davis-Bacon survey program. If the response from this initial contact is not satisfactory, then the process described in 2.) and 3.) should be followed.

With regard to any other matter not yet ripe for the formal process described here, initial contact should be with the Branch of Construction Wage Determinations. Write to:

Branch of Construction Wage Determinations
Wage and Hour Division
U.S. Department of Labor
200 Constitution Avenue, N.W.
Washington, DC 20210

2.) If the answer to the question in 1.) is yes, then an interested party (those affected by the action) can request review and reconsideration from the Wage and Hour Administrator (See 29 CFR Part 1.8 and 29 CFR Part 7). Write to:

Wage and Hour Administrator
U.S. Department of Labor
200 Constitution Avenue, N.W.
Washington, DC 20210

The request should be accompanied by a full statement of the interested party's position and by any information (wage payment data, project description, area practice material, etc.) that the requestor considers relevant to the issue.

3.) If the decision of the Administrator is not favorable, an interested party may appeal directly to the Administrative Review Board (formerly the Wage Appeals Board). Write to:

Administrative Review Board
U.S. Department of Labor
200 Constitution Avenue, N.W.
Washington, DC 20210

4.) All decisions by the Administrative Review Board are final.

END OF GENERAL DECISION

ATTACHMENT D
PROJECT SPECIFIC DOCUMENTS

THIS PAGE LEFT BLANK INTENTIONALLY

INFORMATION AVAILABLE ONLY BY INTERNET OR DISC

http://www.dot.state.tx.us/mnt/contract/rfp.htm

ATTACHMENT D1 – General Requirements

TxDOT has developed, over the past few years, prototypical designs for Maintenance Facilities, Area Engineering and Maintenance Facilities, and District Laboratories. Recent examples of construction documents for these prototypical designs are included in Attachments E,F, & G. Included under **ATTACHMENT D** are project specific drawings for the projects that are a part of this RFP. These consist of project specific site plans and floor plans in schematic format, developed by **TxDOT** Facilities Management and Fort Worth district personnel, and will form the basis for final construction documents for each part of the **PROJECT**. In other words, the **PRIVATE ENTITY** will develop construction documents based on the prototypes but using the site and floor plan layouts provided in **ATTACHMENT D**. The **RFP** includes pdf only drawings and specs, but the successful **PRIVATE ENTITY,** after the award of the **PROJECT**, will be provided editable electronic AutoCad and Word documents that may be used in the preparation of new construction documents. The **PRIVATE ENTITY** will be required to use the prototypical designs and will not need to develop new designs. The only project for which prototypical construction documents are not available is the Renovatoion of Existing District Laboratory. Original construction documents and specifications will need to be developed for this project.

If awarded the **PROJECT**, the **PRIVATE ENTITY** will be required to develop and deliver complete construction documents for each part of the **PROJECT**. A complete set of construction documents will be developed and delivered for each of the following:

1. South Tarrant Area Engineering & Maintenance Facility, Tarrant County, Fort Worth District Headquarters
2. Glen Rose Maintenance Facility, Hood & Somervell Counties, Fort Worth District
3. Mineral Wells Maintenance Facility, Palo Pinto County, Fort Worth District
4. Renovation of Existing Laboratory, Tarrant County, Fort Worth District Headquarters

The **PRIVATE ENTITY** may include all, some, or some plus parts of others of the above projects in their proposal based on their assessment of the value of the exchange property and what can reasonably be included for that value. **Order of priority for the projects shall be the order listed above.**

Construction documents shall be prepared and sealed by Texas licensed professional Architects, Landscape Architects, and Engineers as required by state law, and shall become the property of the state at project completion.

1. SERVICES TO BE PROVIDED BY THE STATE

A. Furnish the Architect preliminary floor plans, site plans, available site information, and any other available documents provided to the State which could assist in the completion of the project. The State will provide a complete topo/boundary line (no utility information) survey for the Glen Rose site and a boundary line/structures (no utility or topo information) survey of the District Headquarters site. All other surveys, geotechnical reports, etc., required for completion of the **PROJECT** shall be provided by the **PRIVATE ENTITY.**

B. Furnish **TxDOT's Facility Design and Production Guidelines** and other requirements for electronic file drawing and project production standards.

C. Review the **PRIVATE ENTITY'S** Architect/Engineer's **(hereafter called the Architect)** plans and specifications, at each required submittal stage of the project. Provide

approvals, comments or make documented requests for adjustments or changes to each submittal within 14 days.

D. Process for approval all Change Orders reviewed and recommended by the Architect as fair and reasonable and determined by the State to be necessary.

E. The **TPM** will provide periodic construction observation of the **PROJECT** in conjunction with the Architect to assure compliance with the approved CDs.

F. Provide coordination for State furnished services required during the project construction.

G. Asbestos reports for existing facilities. See Attachment D.

2. SERVICES TO BE PROVIDED BY THE ARCHITECT

The Architect shall prepare: design schematics, construction drawings, specifications, cost estimates, and recommended construction schedule.

The elements of work include but are not limited to the following:

PHASE I – PROGRAMMING, RESEARCH AND SCHEMATIC DESIGN

A. The Architect shall meet with the State and others as required to analyze and develop final preliminary site plans and floor plans (using the State furnished preliminary site plans and floor plans as a guide) for the project which is in conformance with the maximum construction budget and consistent with the verifiable space needs for the functions to be performed at the facility.

B. The Architect shall prepare and submit to the State, for review and approval, final preliminary site plans and floor plans. After review, the Architect will be advised of any changes, additions or corrections to the documents. The Architect shall then make such corrections as are necessary before final acceptance of this phase of the work. These plans shall be considered final programming documents and shall define all interior spaces and all major site elements.

C. The **PRIVATE ENTITY**, at this phase, shall initiate and pay for site investigations, geotechnical studies, and surveys, in order to provide timely information for use in the design development. Since the parts of the **PROJECT** are on five different sites around the Dallas/Fort Worth area, foundation conditions will vary. After award of the **PROJECT** the **PRIVATE ENTITY** will contract for soils investigations to determine the foundation design, but for purposes of the proposal and cost estimating, we will use the foundation design that has been used most often. In general, the existing subgrade under the building shall be excavated to a depth of 4’-0” and extend 5’-0” beyond the exterior of the building. See the site specific written description for further foundation information.

D. The Architect shall prepare a preliminary construction cost estimates. A separate estimate shall be prepared for each part of the **PROJECT**.

E. The Architect shall conduct a thorough investigation of the site including verification of all known existing and planned utilities and site features, to insure they do not conflict with the proposed design.

F. The Architect's plans and specifications shall comply with applicable provisions, rules, regulations, standards, codes, etc. established under the latest edition, version, document, etc. of the American with Disabilities Act Accessibility Guidelines (ADAAG), Texas Accessibility Standards (TAS) of the Elimination of Architectural Barriers Act, Article 9102, Texas Civil Statutes, International Building Code (IBC), Uniform Mechanical Code (UMC), Uniform Plumbing Code (UPC), National Electric Code (NEC), National Fire Protection Association (NFPA) codes and standards, American National Standards Institute (ANSI), American Society of Testing and Materials (ASTM), Occupational Safety and Health Administration (OSHA), National Electrical Manufacturers Association (NEMA), Underwriters Laboratory (UL), American Society of Heating, Refrigeration & Air Conditioning Engineers (ASHRAE), Electronic Industries Association / Telecommunications Industries Association (EIA/TIA), American Concrete Institute (ACI), American Institute of Steel Construction (AISC), Steel Deck Institute (SDI), Steel Joist Institute (SJI), Environmental Protection Agency (EPA), applicable sediment and erosion control regulations, and any other applicable standards, rules, regulations, codes, etc. It shall be the Architect's responsibility to perform a thorough code review of the project and recommend to the State areas of concern with regard to appropriate codes and regulations. The State is exempt from all municipal codes and regulations and, at it's option, may choose non-compliance. **Building permits and inspections normally required by municipalities or counties are not required for these projects, however, all tap fees and fees for standard municipal connections shall be paid by the PRIVATE ENTITY**.

G. The Architect shall research, coordinate and meet with appropriate utilities (municipal, county, MUD, etc.) as required to establish and secure commitments for extension of any utilities required for the project. Establish and submit to the State all costs for utility extensions and utility letters of commitment. The State will make the final determination concerning entering any agreements with utility providers.

H. Should asbestos containing materials, not identified in asbestos reports furnished by the State or other hazardous substances, be discovered in any structure to be demolished, the Architect shall prepare plans, specifications, and cost estimates for removal or remediation. Costs associated with preparing the plans, specifications, and monitoring the removal or remediation of the hazardous substances are considered additional services by the State.

I. The Architect shall submit schematic documents, drawings, and specifications to the State, for review. All plans, specifications, construction phasing, and estimates shall be submitted in triplicate. After review by the State, the Architect will be advised of any changes, additions, or corrections to the submitted documents. The Architect shall then make such corrections as are necessary before final acceptance of this phase of the work. State review period is 14 days. Upon final acceptance by the Owner, the construction documents shall become a part of the **DEA**.

J. Since the parts of the **PROJECT** are on three different sites around the Dallas/Fort Worth area, foundation conditions will vary. After award of the **PROJECT** the **PRIVATE ENTITY** will contract for soils investigations to determine the foundation design, but for purposes of the proposal and cost estimating, we will use the foundation design that has been used most often. In general, the existing subgrade under the building shall be excavated to a depth of 4'-0" and extend 5'-0" beyond the exterior of the building. See the site specific written description for further foundation information.

PHASE II– 50% CONSTRUCTION DOCUMENTS

Upon acceptance of Phase I, the Architect shall proceed with the following work upon written authorization from the State's authorized representative:

A. The Architect shall consult freely with TxDOT's Facilities Management staff concerning the work and shall immediately advise the State of any unusual requirements, features or issues not apparent during execution of Phase I.

B. The Architect shall submit documents, drawings, and specifications to the State, for review at approximately 50 percent stage of final completion of the construction documents. All plans, specifications, construction phasing, and estimates shall be submitted in triplicate. After review by the State, the Architect will be advised of any changes, additions, or corrections to the submitted documents. The Architect shall then make such corrections as are necessary before final acceptance of this phase of the work. Upon final acceptance by the Owner, the construction documents shall become a part of the **DEA**.

C. Construction drawings shall be prepared with Computer-Aided Design and Drafting (CADD) technology and architectural and MEP guidelines. Graphics files for documents and information exchange shall comply with the latest revision of **TxDOT's Facility Design Standards and Production Guidelines.** CADD format as directed by these standards shall be verified by the State at each phase of the project.

D. All plans and specifications shall be marked "Preliminary Review: Not For Construction." These shall include architectural, structural, civil, mechanical, electrical, landscaping, site and roadway work. State review period will be 14 days.

PHASE III– 95% CONSTRUCTION DOCUMENTS

Upon acceptance of Phase II, the Architect shall proceed with the following work upon written authorization from the State's authorized representative:

A. The Architect shall prepare complete construction documents including drawings, specifications, project construction schedule, and engineering calculations setting forth in detail for the work required including site and roadway work.

B. The Architect shall consult freely with the State concerning the work and shall immediately advise the State of any unusual requirements or features not apparent during execution of Phase I or II.

C. The Architect shall submit construction documents to the State, for review and approval, at approximately the **95 %** stage of final completion. All drawings, specifications, and construction schedules shall be submitted in triplicate and in electronic format. After 14 day review by the State, the Architect will be advised of any changes, additions, or corrections to the submitted documents. The Architect shall then make such corrections as are necessary before final acceptance of this phase of the work. Upon final acceptance by the Owner, the construction documents shall become a part of the **DEA**.

D. The Architect shall submit completed drawings and specifications to the Architectural Barriers Section of the Texas Department of Licensing and Regulation (TDLR) for review and approval. The **PRIVATE ENTITY** shall pay all fees. The Architect shall then make such corrections as are necessary in order to assure compliance. Coordinate submittal

of plans with TDLR/ Registered Accessibility Specialist to ensure all corrections can be made prior to start of construction. The Architect shall provide to the State the following 100% construction documents:

- 4 full size sets of drawings
- 4 ½ size sets of drawings
- 4 copies of specifications
- 4 copies of electronic documents (on disks) with drawings in AutoCAD and specifications in Word.
- 3 copies of electronic documents (disks) with drawings in MicroStation and specifications in Word.
- 1 full size set of reproducible original drawings (unbound).

E. The Architect's drawings, specifications, shall conform to the latest energy conservation design standards for new state buildings as prepared by the Governor's State Energy Conservation Office, , "Energy Conservation Design Standard for New State Buildings", current revision. The legislature has passed mandatory requirements for both new and remodeled facilities for both energy and water conservation. Review documents will be submitted by the Architect as directed by the State and any agency fees required shall be paid by the **PRIVATE ENTITY**.

PHASE IV – CONSTRUCTION ADMINISTRATION

Refer to RFP, DEA, and prototypical drawings and specifications in Attachments E and F for detail requirements of the Contractor's responsibilities.

A. The Architect shall provide general administration of the construction of the **PROJECT** and will be the State's representative during construction and until final completion. The Architect has the authority to act on behalf of the State to the extent provided in the construction contract documents, unless otherwise modified by written instrument which will be provided to the **PRIVATE ENTITY'S** General Contractor **(hereafter called the Contractor)**. If the **PRIVATE ENTITY** will act as his own General Contractor then the **PRIVATE ENTITY** may be substituted for the Contractor. The Architect will advise and consult with the State and all the State's instructions to the Contractor will be issued through the Architect except where the State reserves such right to issue instructions directly to the Contractor through other designated representatives. All instructions shall be confirmed expeditiously in writing with copies furnished the Architect, the State's designated representatives and the Contractor by the party issuing the instruction.

B. After the award of the Construction Contract, the Architect shall provide adequate site visits and perform construction inspection satisfactory to the State to observe the construction of the project, check required shop drawings, prepare change orders and/or supplementary drawings, and make necessary inspections to determine that the workmanship and quality of materials comply with the requirements of the plans and specifications, and that all provisions of the contract are complied with. Inspection of all phases of the work, material and equipment shall be provided by personnel technically qualified by education and experience to competently inspect such work.

C. The Architect shall maintain a shop drawing and submittal log form acceptable to the State and submit approved copies of each shop drawing and submittals on materials and equipment to the State at time of approval. The minimum number of submittals to the State shall be three or as determined for a specific project. The Architect shall provide a copy of the shop drawing and submittal log to the State on a monthly basis.

The submittal log shall indicate the status of each submittal and dates action was taken by each party. The Architect shall approve, disapprove, or take other appropriate action on all submittals within ten calendar days of receipt.

D. The Architect shall cause the Contractor to provide a detailed schedule of values for the work (on the State's standard form), to the Architect and State. The Architect shall review the Contractor's applications for payment based on the approved schedule of values Upon approval by the Architect the pay requests shall be submitted to the State at monthly intervals for keeping accurate records of the progress of the work.

E. The Architect shall conduct monthly construction progress meetings at the site. The Architect shall maintain an action item agenda on a form acceptable to the State for the weekly construction progress meetings and shall update and distribute the agenda monthly. The Architect shall make available the appropriate team members, determined by the Architect, which are technically qualified by education and experience to resolve technical issues required to allow for the orderly progress of the construction. The Architect and/or his sub-providers shall review the Contractor's as-built documents monthly to assure that all changes or modifications in the work are correctly noted.

F. The Architect shall review and comment on the Contractor's construction schedule and required updates, monitor the progress of work against the schedule, and document any variations between the schedule and actual implementation of the work. The Architect shall submit to the State monthly project reports, which shall include the status of the work for compliance with the drawings, specifications, schedule, acceptable labor force and appropriate action items.

G. The Architect shall require no less than two site inspections from his major sub-providers during the course of the project. These shall be in addition to the final inspection at project completion.

H. Upon completion of the work, the Contractor shall notify the Architect in writing that the work has been completed and include in this notice a list of any minor work items needing to be finalized that would not affect a thorough inspection. The Architect shall conduct an inspection, performed by appropriate members of his staff and/or sub-providers and shall prepare a list of the items requiring correction. If the list of deficiencies is in excess of industry norm, the Architect will notify the State and Contractor of this fact; (ie: the project is not ready for final inspection). After the Contractor has performed the required corrections satisfactory to the Architect, the Architect shall notify the State in writing that the contract has been performed according to the plans and specifications and is ready for final inspection. The Architect shall accompany the State on the final inspection to assure that the total work has been completed in accordance with the Contract Documents.

I. The Architect will receive all required close-out documents in duplicate from the Contractor. These documents must be submitted in a professional and durable manner as they will serve the State as reference manuals for the life of the facility. The Architect shall inspect all required warranties, guarantees, bonds, equipment operating manuals and similar required material and documents to make sure that all such materials and documents are received and that they meet the requirements of the Specification, after which they shall be transmitted to the State's designated representatives. The Contractor must submit affidavits of payments of debts and claims and consent of surety to Final Payment. Complete as-built documents must be submitted to the Architect with

the close out documents and transferred to the Architect's final electronic document information which will be delivered to the State upon project close out.

J. Upon completion of construction the Architect shall make changes in the original CADD drawings of the Project to show the changes made by and noted by the Contractor of the work and final location of the mechanical service lines, outlets including all outside utilities and all other major changes and modifications to the work and shall forward reproducible permanent type "Record Drawings" with supporting information called for in "**TxDOT's Facility Design Standards and Production Guidelines.**" to the State. The Architect shall develop, prepare and submit project "record/as-built" drawings in electronic file format.

End of Attachment D1

ATTACHMENT D2
Fort Worth District Headquarters (DHQ)
South Tarrant Area Engineering & Maintenance Facility

Two separate facilities will be built at the Fort Worth District Headquarters (DHQ), 2501 Southwest Loop, Fort Worth, TX 76115:

- South Tarrant Area Engineering & Maintenance Facility
- Renovation of existing Fort Worth District Laboratory

A more detailed description of South Tarrant Area Engineering and Maintenance Facility follows:

This new facility will be built on the south end of the DHQ and have it's entrance off of Edgecliff Road. All common utilities are currently available at the site. **TxDOT** will provide a boundary line/structures survey and legal description of the site. The **PRIVATE ENTITY** shall provide a survey to include utility and topographic information and a geotechnical study for foundation design. Natural gas and telephone service are also currently in use at the site. Since natural gas is available at the site, the preferred method of heating will be natural gas. This will include space heating, water heating, and infrared heating in shop area. See **ATTACHMENT A** for more detailed site information.

- Since city sewer is available, the truck wash can be attached to city sewer and no recycling equipment is required.
- A fuel system already exists at this site, it will remain and no new fuel system is required.
- The DHQ already has a radio tower. No radio tower will be required.

The project will be built according to the Prototypical Area Engineering and Maintenance Facility Construction Documents, provided in **ATTACHMENT F**, in conjunction with the project specific site plan and floor plan included in this attachment. Some site structures are shown on the project specific site plan only and are to be designed and built as follows:

- 2 – 25' x 35' covered bulk storage bins
    - 7" thick 27' x 36' reinforced concrete slab with 7" thick 27' x 10' reinforced concrete apron
    - 1'-0" thick x 6'-0" high concrete walls enclosing a clear floor area 25' x 35'
    - Pre-engineered metal structure mounted on top of concrete walls with metal R panel 4 sides, 18' x 16' coiling overhead door, and standing seam roof with one-way slope enclosing a 25' x 35' area
    - Minimum overhead clearance shall be 16'
- Asphalt Storage Tanks and Truck parking with spill Containment Area
    - This site already has new vertical asphalt storage tanks. These will remain. Truck parking with containment area and light gage metal parking canopy will be added to this site with an allowance of $25,000.00. See allowance below.
- Spreader stands are not in contract (NIC) – They will be provided and installed by TxDOT.

The following items will be included as a construction allowance for the proposal only. All will be incorporated into the **PROJECT** during the design phase. Design cost shall not come out of the allowance but be included in the proposed overall design fee :

- Landscaping and Irrigation: $50,000.00. **PRIVATE ENTITY** to provide design and incorporate into construction documents.

- Vehicle Service Lift in shop: $30,000.00 TxDOT will provide manufacturer and model number. **PRIVATE ENTITY** to provide design and incorporate into construction documents.
- Asphalt Storage Tanks and Truck parking with spill Containment Area: $25,000.00 This site already has new vertical asphalt storage tanks. These will remain. Truck parking with containment area and light gage metal parking canopy will be added to this site with an allowance of $25,000.00. TxDOT will provide a diagrammatic layout of containment area and truck parking .**PRIVATE ENTITY** will design and incorporate into construction documents.
- Furniture and Systems Furniture: $170,000.00 **TxDOT** will use its state contracts to work with furniture vendor and arrange for installation. **PRIVATE ENTITY** will, with input from TxDOT, provide furniture design, provide a diagrammatic layout of systems furniture in the construction documents and design electrical and mechanical to provide for systems furniture. During construction, **PRIVATE ENTITY** will make final electrical connections to systems furniture, and make payment to furniture vendor.

Building foundation preparation for the area of the Office Building, Shop/Lab, Vehicle Storage, and Truck Wash, including 5' beyond, overexcavate the exposed soil subgrade such that a minimum 4 feet of compacted select fill material can be placed beneath the building slab. See **ATTACHMENT F** for further foundation description.

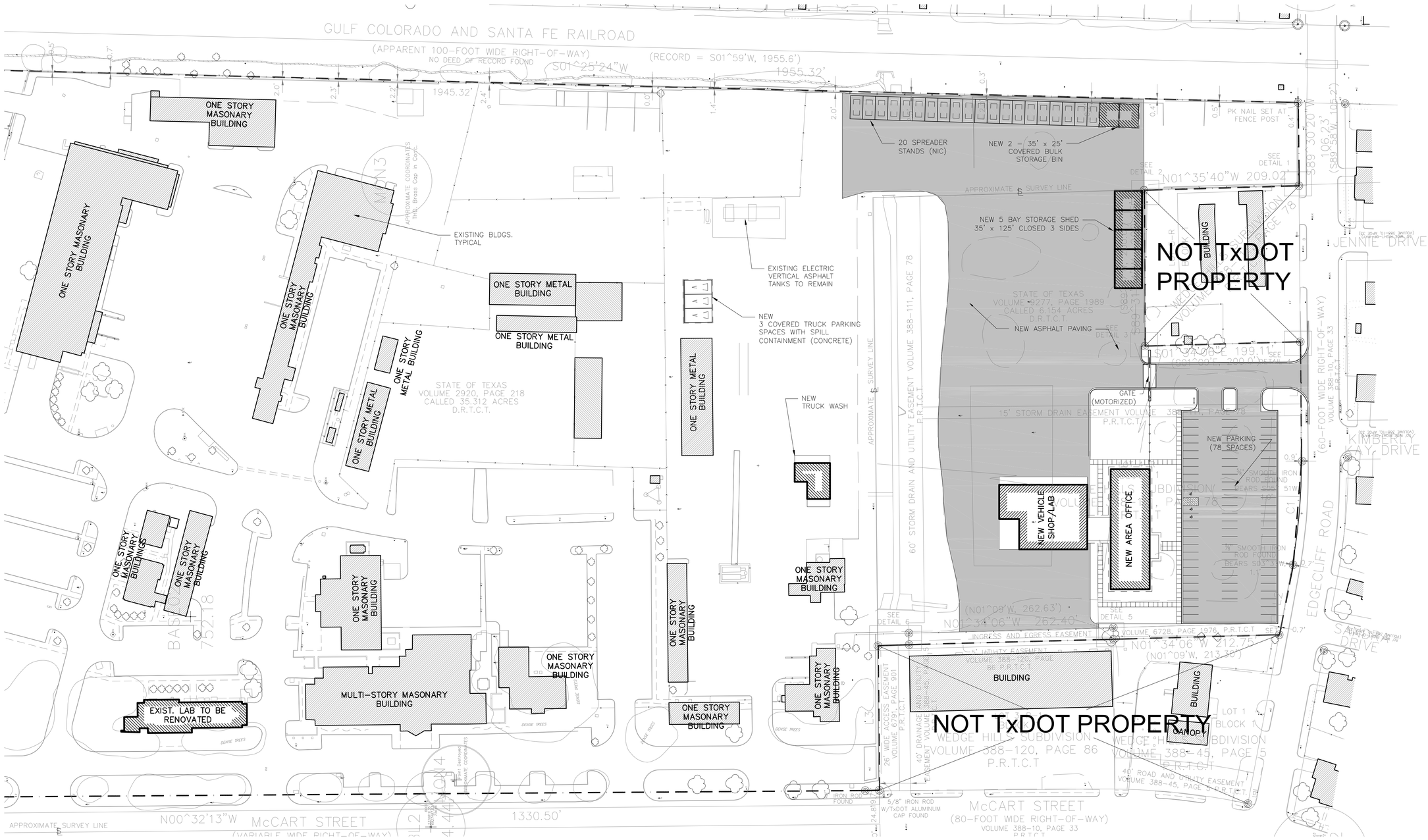

1 SITE PLAN
SCALE: 1/64" = 1'-0"

PLAN NORTH

0 25' 50' 100' 200'

SITE PLAN - FORT WORTH DISTRICT HEADQUARTERS CAMPUS

NOTE: THIS DRAWING WAS CREATED FOR PRODUCTION ON 22" x 34" SHEET SIZE. DO NOT SCALE PRINTS.

CADFILE: T:\MNTFMID02FTW\CBC4704-00-837\02-77-4704\00837\Acad\South Tarrant AE-MF-District Lab\ARCH\DHQS-1.dwg Plotted: Thu, Aug. 26, 2010 @ 10:40 AM By: TBARRE2

Texas Department of Transportation
125 E. 11th Street
Austin, Texas 78701-2483
(512) 416-3048

Copyright © 2005 Texas Department of Transportation

THIS DOCUMENT IS RELEASED FOR THE PURPOSE OF INFORMATION ONLY
NOT FOR REGULATORY APPROVAL, PERMITTING, OR CONSTRUCTION.

FORT WORTH DISTRICT HEADQUARTERS CAMPUS
S. TARRANT AREA ENGINEER & MAINTENANCE FACILITY
RENOVATION OF EXISTING DISTRICT LAB

Revisions
1
2
3

Drawn by: BH
Project No. CBC4704-00-837
Date 08-2010
Sheet No.

DHQS.1
of X sheets

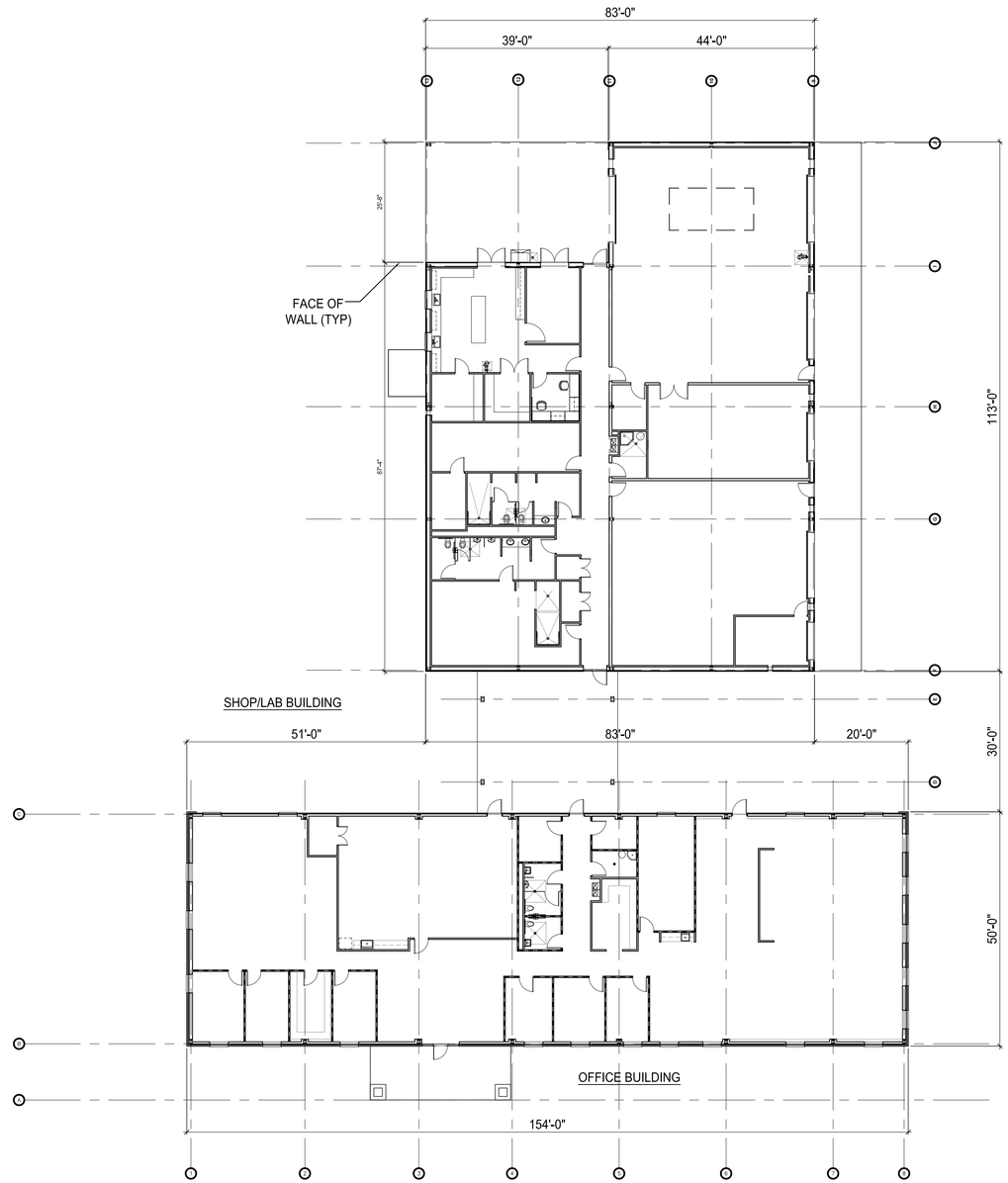

1 FLOOR PLAN
SCALE: 1/16" = 1'-0"

NORTH

SEE ATTACHMENT F FOR PROTOTYPICAL CONSTRUCTION DOCUMENTS

FLOOR PLAN - SOUTH TARRANT AREA ENGINEERING AND MAINTENANCE FACILITY

NOTE: THIS DRAWING WAS CREATED FOR PRODUCTION ON 22"x34". DO NOT SCALE PRINTS.

CADFILE: T:\INTFW\D02FTW\CBC4704-00-837\02-77-470400837\AcadArch\AO-1.dwg Plotted: Tue, Aug. 11, 2009 @ 8:51 AM By: BHICKS

Texas Department of Transportation
125 E. 11th Street
Austin, Texas 78701-2483
(512) 416-3048

Copyright © 2005 Texas Department of Transportation

THIS DOCUMENT IS RELEASED FOR THE PURPOSE OF
INFORMATION ONLY
NOT FOR REGULATORY
APPROVAL, PERMITTING,
OR CONSTRUCTION.

SOUTH TARRANT AREA ENGINEERING AND MAINTENANCE FACILITY
FORT WORTH DISTRICT HEADQUARTERS

Revisions

Drawn by:
EE/TB
Project No.
CBC470400837
Date
08/2009
Sheet No.

AO.1
of X sheets

1 FLOOR PLAN - OFFICE BUILDING
SCALE: 1/8" = 1'-0"

NORTH

SEE ATTACHMENT F FOR PROTOTYPICAL CONSTRUCTION DOCUMENTS

KEY PLAN

FLOOR PLAN - BUILDING A - OFFICE

NOTE: THIS DRAWING WAS CREATED FOR PRODUCTION ON 22" SHEETS. DO NOT SCALE PRINTS.

CADFILE: T:\MNTFM\D02FTW\CBC4704-00-837\02-77-4704008837\Acad\Arch\AO-2.dwg Plotted: Tue, Aug. 11, 2009 @ 8:51 AM By: BHICKS

Texas Department of Transportation
125 E. 11th Street
Austin, Texas 78701-2483
(512) 416-3048

Copyright © 2005 Texas Department of Transportation

THIS DOCUMENT IS RELEASED FOR THE PURPOSE OF
INFORMATION ONLY
NOT FOR REGULATORY
APPROVAL, PERMITTING,
OR CONSTRUCTION.

SOUTH TARRANT
AREA ENGINEERING
AND MAINTENANCE FACILITY
FORT WORTH DISTRICT HEADQUARTERS

Revisions

Drawn by:
EE/TB
Project No.
CBC470400837
Date
08/2009
Sheet No.

AO.2
of X sheets

1 FLOOR PLAN - SHOP/LAB BUILDING
SCALE: 1/8" = 1'-0"

SEE ATTACHMENT F FOR PROTOTYPICAL CONSTRUCTION DOCUMENTS

KEY PLAN

FLOOR PLAN - BUILDING B - SHOP/LAB

NOTE: THIS DRAWING WAS CREATED FOR PRODUCTION ON 22" x 34" SHEET SIZE. DO NOT SCALE PRINTS.

CADFILE: T:\MNTFM\D02FTW\CBC470400837\Acad\Arch\AO-3.dwg Plotted: Tue, Aug. 11, 2009 @ 8:52 AM By: BHICKS

Texas Department of Transportation
125 E. 11th Street
Austin, Texas 78701-2483
(512) 416-3048

Copyright © 2005 Texas Department of Transportation

THIS DOCUMENT IS RELEASED FOR THE PURPOSE OF
INFORMATION ONLY
NOT FOR REGULATORY
APPROVAL, PERMITTING,
OR CONSTRUCTION.

SOUTH TARRANT AREA ENGINEERING AND MAINTENANCE FACILITY
FORT WORTH DISTRICT HEADQUARTERS

Revisions

Drawn by: EE/TB
Project No. CBC470400837
Date 08/2009
Sheet No.

AO.3
of X sheets

ATTACHMENT D3
Glen Rose Maintenance Facility – Project Summary

The new Glen Rose Maintenance Facility will be built on an unimproved site on SH 144 adjacent to Squaw Creek Lake, SW of Fort Worth and north of Glen Rose on the Hood/Somervell county line. See **Attachment A** for more detailed site information. The State will provide a topo/boundary line survey. The **PRIVATE ENTITY** will need to research and provide utility information. Power is available adjacent to the site but no other utilities are available. Therefore, the project will be configured as follows:

- An on-site sewage treatment facility shall be designed, permitted with TCEQ/County, and built.
- Since no city sewer is available at this location, recycling equipment for the truck wash is required. See **Attachment E** for equipment design and specifications.
- An on-site domestic potable water system (water well) will be designed, permitted, and built.
- All HVAC, water heating, and all other appliances and equipment shall be electric.

The project will be built according to the Prototypical Maintenance Facility Construction Documents, provided in **Attachment E**, in conjunction with the project specific site plan and floor plan included in this attachment. Some site structures are shown on the project specific site plan only and are to be designed and built as follows:

- 1 – 25' x 35' covered bulk storage bin
    - 7" thick 27' x 36' reinforced concrete slab with 7" thick 27' x 10' reinforced concrete apron
    - 1'-0" thick x 6'-0" high concrete walls enclosing a clear floor area 25' x 35'
    - Pre-engineered metal structure mounted on top of concrete walls with metal R panel 4 sides, 18' x 16' coiling overhead door, and standing seam roof with one-way slope enclosing a 25' x 35' area
    - Minimum overhead clearance shall be 16'
- Asphalt Storage Tanks and Truck parking with spill Containment Area
    - Consists of 90' x 72' area surrounded by a low reinforced 8" concrete wall approx. 1'-0" below grade and 6" above grade and 2-12' x 12' x 12" thick reinforced concrete pads with 4-12' deep drilled piers each for 2 tanks. Concrete ramps up and over the concrete wall shall provide access for trucks. Provide 2-8000gal. electric asphalt storage tanks. Power to be fed from main panel in Shop Area. 2 outermost parking areas shall be covered with a light gage pre-engineered metal parking canopy. Roof area approximately 70'x20' with minimum overhead clearance of 14'. See allowance below.
- Spreader stands are not in contract (NIC) – Provided and installed by TxDOT.

The following items will be included as a construction allowance for the proposal only. All will be incorporated into the **PROJECT** during the design phase. Design cost shall not come out of the allowance but be included in the proposed overall design fee:

- Radio Tower including foundation: $100,000.00 TxDOT will provide a copy of construction documents from a previously built TxDOT Tower as a go by. **PRIVATE ENTITY** will design new Tower and incorporate into construction documents.
- Vehicle Service Lift in shop: $30,000.00 TxDOT will provide manufacturer and model number. **PRIVATE ENTITY** to provide design and incorporate into construction documents.

- Landscaping and Irrigation: $30,000.00. **PRIVATE ENTITY** will provide design and incorporate into construction documents.
- Asphalt Storage Tanks and Truck parking with spill Containment Area: $155,000.00 TxDOT will provide manufacturer and model number for tanks and a diagrammatic layout of containment area and truck parking. **PRIVATE ENTITY** will design and incorporate into construction documents.
- Furniture and Systems Furniture: $59,000.00 **TxDOT** will use its state contracts to work with furniture vendor. **TxDOT** will provide furniture design and arrange for installation. **PRIVATE ENTITY** will provide a diagrammatic layout of systems furniture in the construction documents (see attachment E) and design electrical and mechanical to provide for systems furniture. During construction, **PRIVATE ENTITY** (Contractor) will make final electrical connections to systems furniture, and make payment to furniture vendor.

Building foundation preparation for the area of the proposed building, including 5' beyond, overexcavate the exposed soil subgrade such that a minimum 4 feet of compacted select fill material can be placed beneath the building slab. See **ATTACHMENT E** for further foundation description.

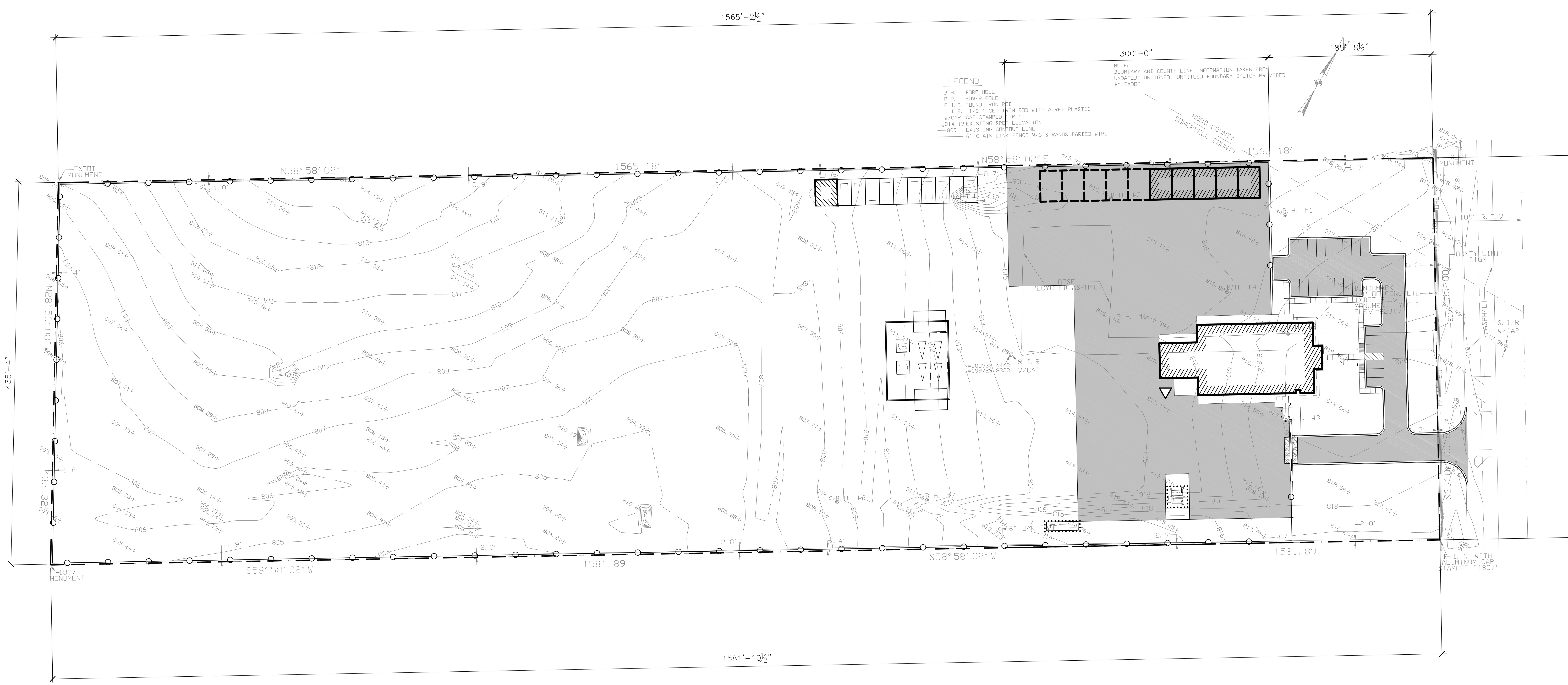

1 OVERALL SITE PLAN
SCALE: 1/64" = 1'-0"

PLAN NORTH

CADFILE: T:\MNTFMD02FTW\CBC4704-00-837\02-77-470400837\Acad\Glen Rose MF\GRS-1.dwg Plotted: Tue, Aug. 11, 2009 @ 8:41 AM By: BHICKS

Texas Department of Transportation
125 E. 11th Street
Austin, Texas 78701-2483
(512) 416-3048

Copyright © 2005 Texas Department of Transportation

THIS DOCUMENT IS RELEASED FOR THE PURPOSE OF INFORMATION ONLY
NOT FOR REGULATORY APPROVAL, PERMITTING, OR CONSTRUCTION.

GLEN ROSE MAINTENANCE FACILITY
HOOD/SOMERVELL CO., GLEN ROSE, TX
FORT WORTH DISTRICT

Revisions

Drawn by: BH
Project No. CBC4704-00-837
Date 08-2009
Sheet No.
GRS.1
of X sheets

SITE PLAN - GLEN ROSE MAINTENANCE FACILITY

NOTE: THIS DRAWING WAS CREATED FOR PRODUCTION ON 22" x 34" SHEET SIZE. DO NOT SCALE PRINTS.

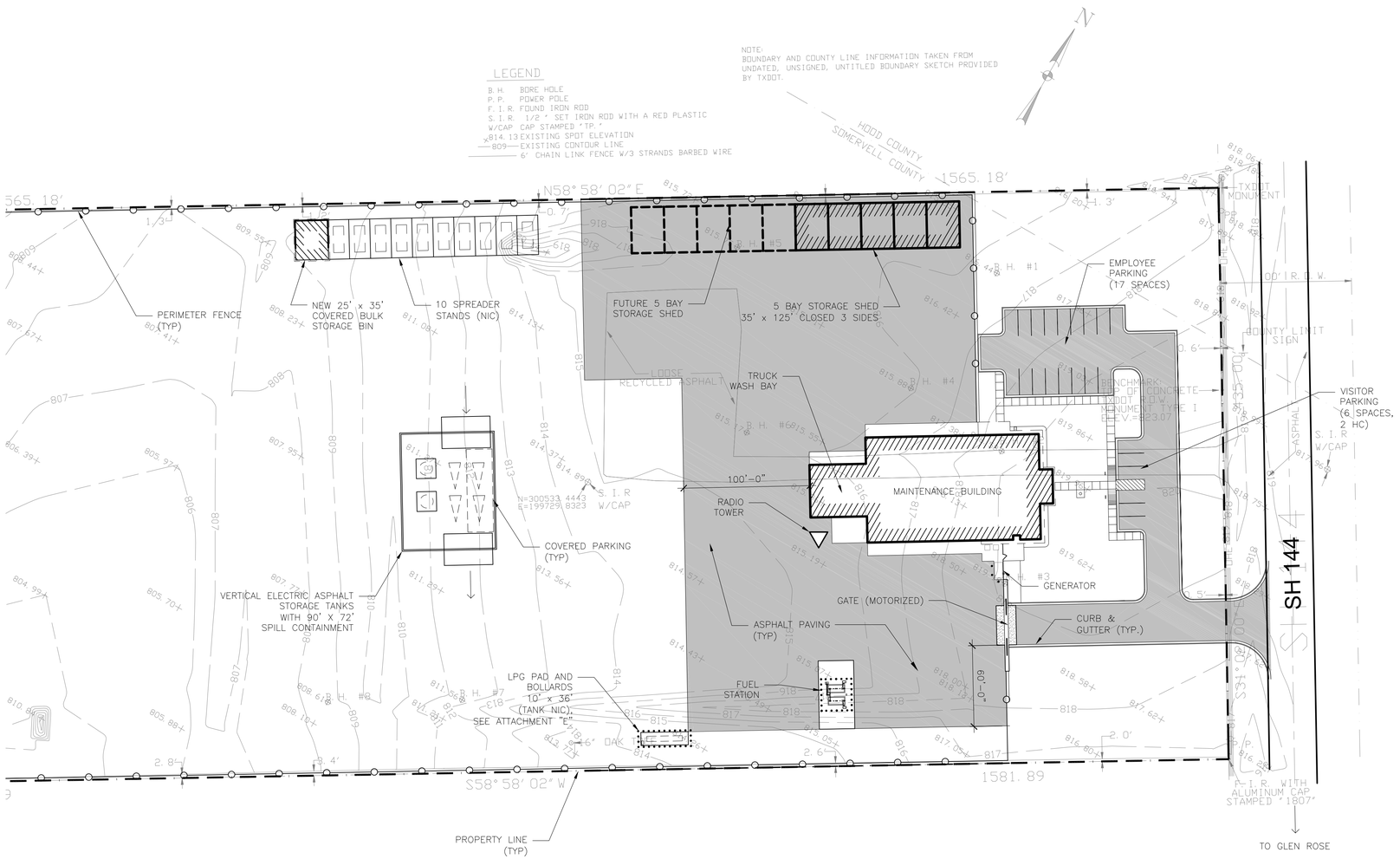

1 PARTIAL SITE PLAN
SCALE: 1" = 50'-0"

PLAN NORTH

0 25' 50' 100' 200'

SITE PLAN - GLEN ROSE MAINTENANCE FACILITY

NOTE: THIS DRAWING WAS CREATED FOR PRODUCTION ON 22" x 34" SHEET SIZE. DO NOT SCALE PRINTS.

CADFILE: T:\MNTFM\D02FTW\CBC4704-00-837\02-77-4704008837\Acad\Glen Rose MF\GRS-1.dwg Plotted: Tue. Aug. 11, 2009 @ 8:42 AM By: BHICKS

Texas Department of Transportation
125 E. 11th Street
Austin, Texas 78701-2483
(512) 416-3048

Copyright © 2005 Texas Department of Transportation

THIS DOCUMENT IS RELEASED FOR THE PURPOSE OF
INFORMATION ONLY
NOT FOR REGULATORY
APPROVAL, PERMITTING,
OR CONSTRUCTION.

GLEN ROSE
MAINTENANCE FACILITY
HOOD/SOMERVELL CO., GLEN ROSE, TX
FORT WORTH DISTRICT

Revisions

Drawn by:
BH
Project No.
CBC4704-00-837
Date
08-2009
Sheet No.

GRS.2
of X sheets

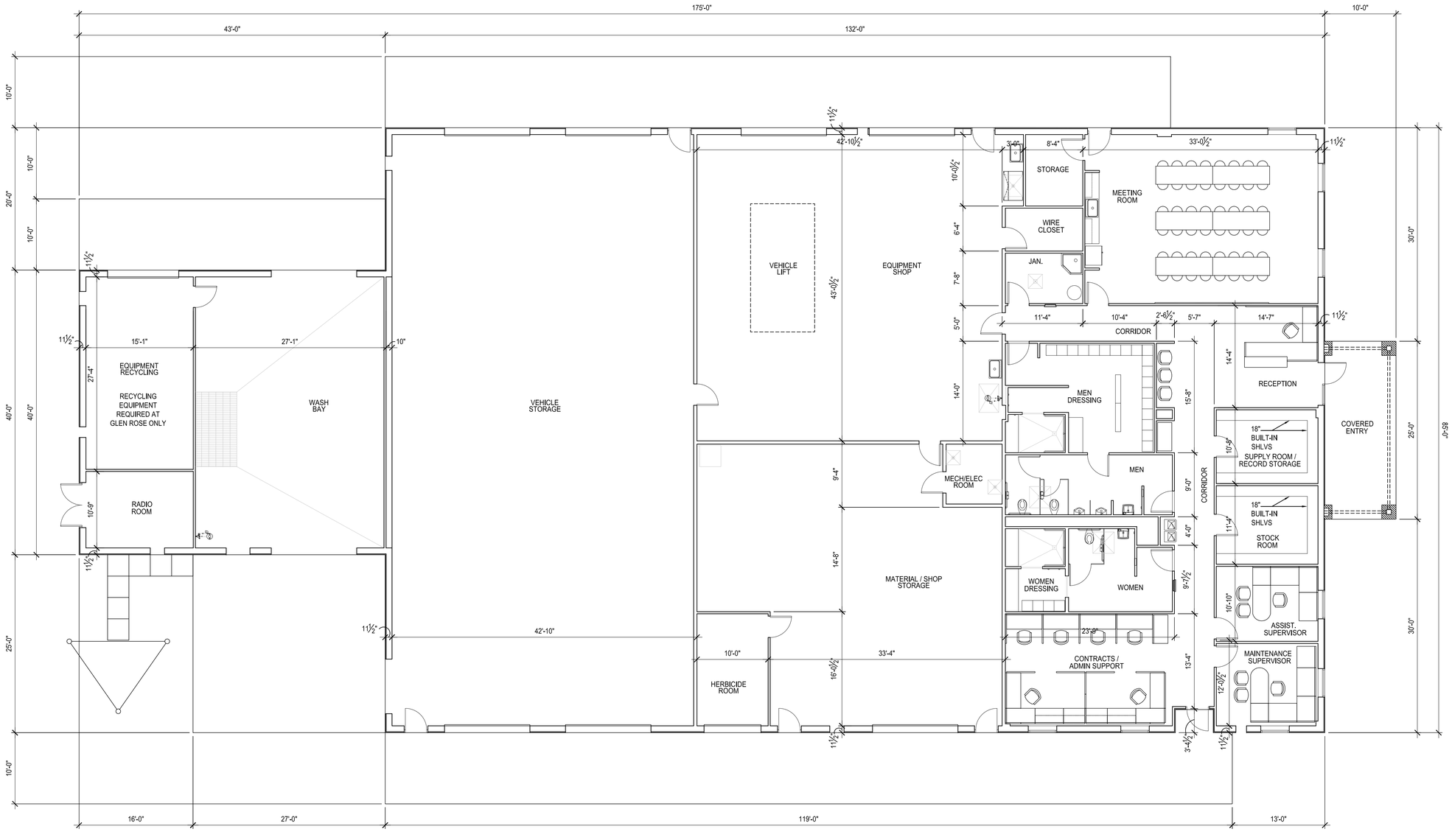

1 FLOOR PLAN
SCALE: 1/8" = 1'-0"

NORTH
GLEN ROSE

NORTH
MINERAL WELLS

SEE ATTACHMENT E FOR PROTOTYPICAL CONSTRUCTION DOCUMENTS

FLOOR PLAN - TYPICAL MAINTENANCE FACILITY

NOTE: THIS DRAWING WAS CREATED FOR PRODUCTION ON 22" X 34" SHEET SIZE. DO NOT SCALE PRINTS.

CADFILE: T:\MNTFM\DI02FTW\CBC4704-00-837\02-77-4704008837\Acad\Arch\MO-1.dwg Plotted: Thu, Aug. 26, 2010 @ 10:47 AM By: TBARRE2

Texas Department of Transportation
125 E. 11th Street
Austin, Texas 78701-2483
(512) 416-3048

Copyright © 2005 Texas Department of Transportation

THIS DOCUMENT IS RELEASED FOR THE PURPOSE OF
INFORMATION ONLY
NOT FOR REGULATORY
APPROVAL, PERMITTING,
OR CONSTRUCTION.

TYPICAL MAINTENANCE FACILITY

FORT WORTH DISTRICT

Revisions

Drawn by:
EE/TB

Project No.
CBC470400837

Date
08-2009

Sheet No.
MO.1
of 28 sheets

ATTACHMENT D4
Mineral Wells Maintenance Facility – Project Summary

The new Mineral Wells Maintenance Facility will be built on the existing Maintenance Facility site at 2400 US 180 W., Mineral Wells, Texas 76067, 3 mi. west of US 281. See **ATTACHMENT A** for more detailed site information. All common utilities are currently available at the site. Water and Sewer service are provided by the City of Mineral Wells. Since city sewer is available, the truck wash can be attached to city sewer and no recycling equipment is required. Natural gas and telephone service are also currently in use at the site. **TxDOT** will provide a boundary line survey and legal description of the site. The **PRIVATE ENTITY** shall provide a survey to include utility, topographic information, and a geotechnical study. The existing grade is very steep toward the rear of the site and graded in terraces. The new facility should include improved access to the rear of the site. Since natural gas is available at the site, the preferred method of heating will be natural gas. This will include space heating, water heating, and infrared heating in shop area.

This project will be done in phases. The Mineral Wells employees will remain on site during construction. They will be housed in the new shop building to remain and in a temporary building to be brought in and set up by **TxDOT.** All utility connections to the temporary building will be made by **TxDOT** prior to the start of construction**.** The existing storage shed will also remain during phase I. Employees will access the site from an existing gate on the east side of the property. This should give employees and the **PRIVATE ENTITY** (contractor) completely separate access. This move will be accomplished by **TxDOT** prior to start of construction.
The **PRIVATE ENTITY** will erect a temporary fence, at a location to be determined during the design phase, that will separate the two groups.

- **Phase I**
  - Demolish existing main building. **TxDOT** will remove all items they wish to salvage prior to demolition. The **TPM** will issue a written notice to proceed when the building is ready for demolition. No demolition will be permitted prior to the written notice to proceed.
  - Construct new main building, parking lots, sidewalks, and the area of asphalt paving accessible to the **PRIVATE ENTITY** in this phase
  - Dismantle and dispose of existing radio tower. Any salvage value to the **PRIVATE ENTITY.** Construct new radio tower.
  - Dismantle and dispose of existing asphalt storage tanks and containment area. Any salvage value to the **PRIVATE ENTITY.** Construct new Asphalt Storage Tanks and Truck parking with spill containment area.
  - Construct covered bulk storage bins.
  - Construct new fuel system.
  - Construct slab, bollards, and run electrical for propane tank, ready for tank installation by propane vendor. Existing propane tank to remain operational until it can be moved to new location.

At the end of Phase l, **TxDOT** will arrange for the removal of the temporary building, and **TxDOT** personnel will move into new building. The **PRIVATE ENTITY** should allow approximately 21 days before Phase II can begin.

- **Phase II**
  - Demolish existing storage shed
  - Complete remainder of site asphalt paving
  - Construct new storage shed

The project will be built according to the Prototypical Maintenance Facility Construction Documents, provided in **Attachment E**, in conjunction with the project specific site plan and floor plan included in this attachment. Some site structures are shown on the project specific site plan only and are to be designed and built as follows:

- 1 – 25' x 35' covered bulk storage bin
    - 7" thick 27' x 36' reinforced concrete slab with 7" thick 27' x 10' reinforced concrete apron
    - 1'-0" thick x 6'-0" high concrete walls enclosing a clear floor area 25' x 35'
    - Pre-engineered metal structure mounted on top of concrete walls with metal R panel 4 sides, 18' x 16' coiling overhead door, and standing seam roof with one-way slope enclosing a 25' x 35' area
    - Minimum overhead clearance shall be 16'
- Asphalt Storage Tanks and Truck parking with spill Containment Area
    - Consists of 90' x 72' area surrounded by a low reinforced 8" concrete wall approx. 1'-0" below grade and 6" above grade. 2-12' x 12' x 12" thick reinforced concrete pads with 4 drilled piers for tanks and concrete ramps up and over the concrete wall. 2 8000gal. electric asphalt storage tanks. Power to be fed from main panel in Shop Area. 2 outermost parking areas shall be covered with a light gage, pre-engineered metal parking canopy. Roof area approximately 70'x20' with minimum overhead clearance of 14'. See allowance below.
- Spreader stands are not in contract (NIC) – They will be provided and installed by TxDOT.

The following items will be included as a construction allowance for the proposal only. All will be incorporated into the **PROJECT** during the design phase. Design cost shall not come out of the allowance but be included in the proposed overall design fee:

- Radio Tower including foundation: $100,000.00 TxDOT will provide a copy of construction documents from a previously built TxDOT Tower as a go by. **PRIVATE ENTITY** will design new Tower and incorporate into construction documents. Existing tower to be removed and disposed of.
- Vehicle Service Lift in shop: $30,000.00 TxDOT will provide manufacturer and model number. **PRIVATE ENTITY** to provide design and incorporate into construction documents.
- Landscaping and Irrigation: $30,000.00. **PRIVATE ENTITY** to provide design and incorporate into construction documents.
- Asphalt Storage Tanks and Truck parking with spill Containment Area: $155,000.00 TxDOT will provide manufacturer and model number for tanks and a diagrammatic layout of containment area and truck parking. **PRIVATE ENTITY** will design and incorporate into construction documents.
- Furniture and Systems Furniture: $59,000.00 **TxDOT** will use its state contracts to work with furniture vendor. **TxDOT** will provide furniture design and arrange for installation. **PRIVATE ENTITY** will provide a diagrammatic layout of systems furniture in the construction documents (see attachment E) and design electrical and mechanical to provide for systems furniture. During construction, **PRIVATE ENTITY** (Contractor) will make final electrical connections to systems furniture, and make payment to furniture vendor.

Building foundation preparation for the area of the proposed building, including 5' beyond, overexcavate the exposed soil subgrade such that a minimum 4 feet of compacted select fill material can be placed beneath the building slab. See **ATTACHMENT E** for further foundation description.

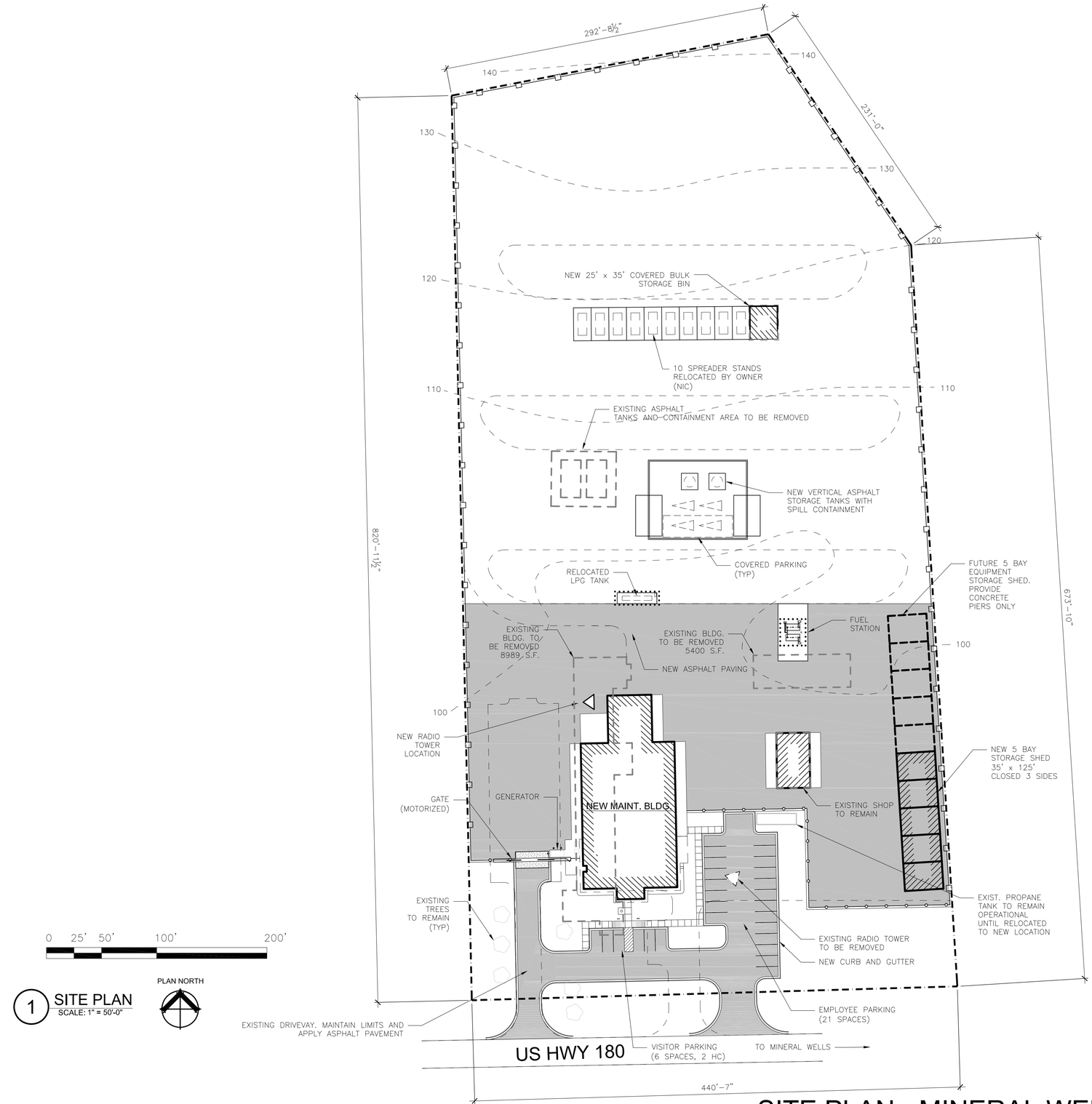

0 25' 50' 100' 200'

PLAN NORTH

1 SITE PLAN
SCALE: 1" = 50'-0"

SITE PLAN - MINERAL WELLS MAINTENANCE FACILITY

NOTE: THIS DRAWING WAS CREATED FOR PRODUCTION ON 22" x 34" SHEET SIZE. DO NOT SCALE PRINTS.

Texas Department of Transportation
125 E. 11th Street
Austin, Texas 78701-2483
(512) 416-3048

Copyright © 2005 Texas Department of Transportation

THIS DOCUMENT IS RELEASED FOR THE PURPOSE OF
INFORMATION ONLY
NOT FOR REGULATORY
APPROVAL, PERMITTING,
OR CONSTRUCTION.

MINERAL WELLS
MAINTENANCE FACILITY
PALO PINTO CO., MINERAL WELLS, TX
FORT WORTH DISTRICT

Revisions

Drawn by:
BH
Project No.
CBC4704-00-837
Date
08-2009
Sheet No.

MWS.1
of X sheets

CADFILE: T:\MNTFM\D02FTW\CBC4704-00-837\02-77-4704008370\cad\Mineral Wells MF\MWS-1.dwg Plotted: Thu. Aug. 26, 2010 @ 2:13 PM By: TBARRE2

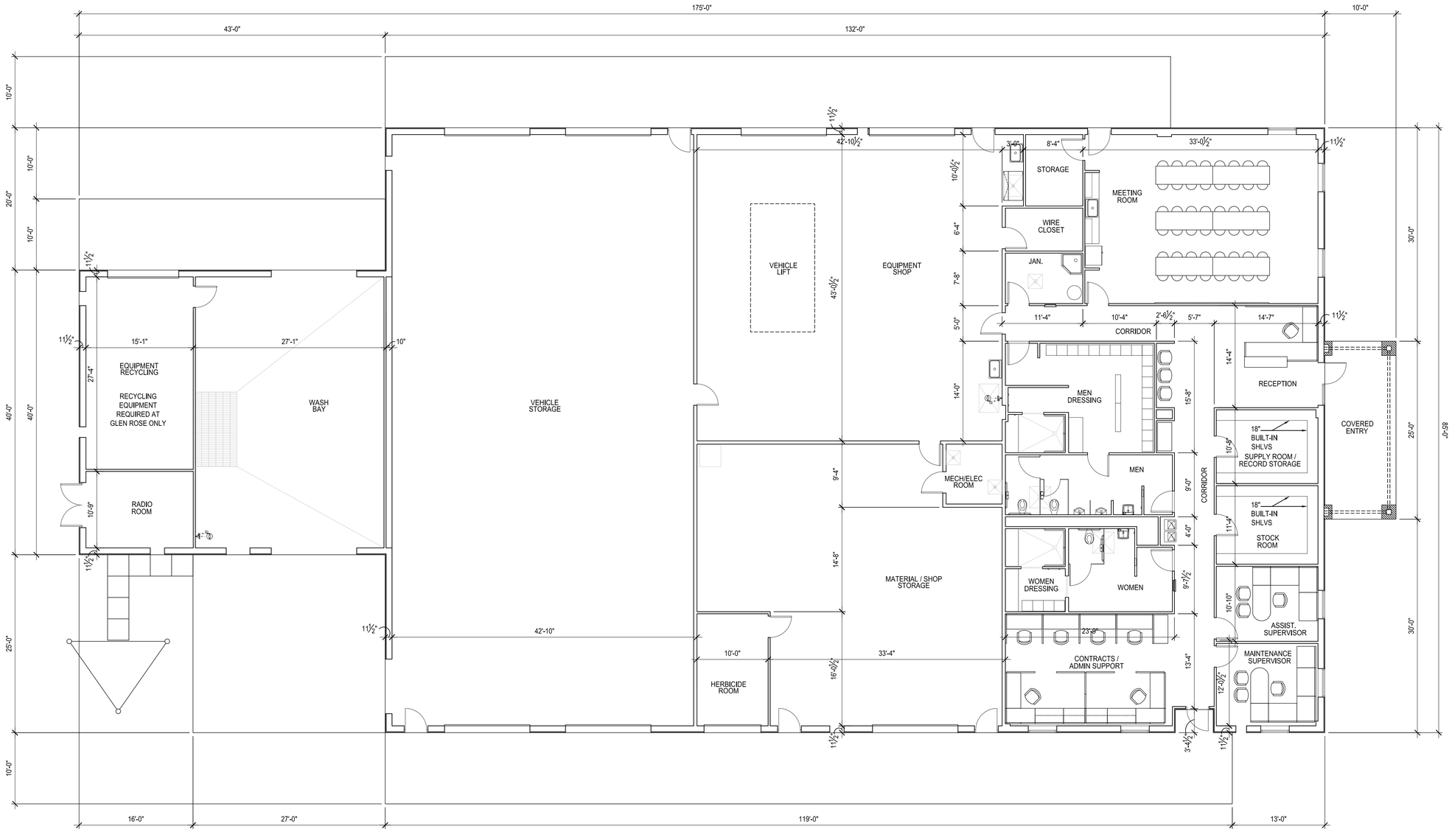

1 FLOOR PLAN
SCALE: 1/8" = 1'-0"

NORTH
GLEN ROSE

NORTH
MINERAL WELLS

SEE ATTACHMENT E FOR PROTOTYPICAL CONSTRUCTION DOCUMENTS

FLOOR PLAN - TYPICAL MAINTENANCE FACILITY

NOTE: THIS DRAWING WAS CREATED FOR PRODUCTION ON 22" X 34" SHEET SIZE. DO NOT SCALE PRINTS.

CADFILE: T:\MNTFM\DI02FTW\CBC4704-00-837\02-77-4704008837\Acad\Arch\MO-1.dwg Plotted: Thu, Aug. 26, 2010 @ 10:47 AM By: TBARRE2

Texas Department of Transportation
125 E. 11th Street
Austin, Texas 78701-2483
(512) 416-3048

Copyright © 2005 Texas Department of Transportation

THIS DOCUMENT IS RELEASED FOR THE PURPOSE OF
INFORMATION ONLY
NOT FOR REGULATORY
APPROVAL, PERMITTING,
OR CONSTRUCTION.

TYPICAL MAINTENANCE FACILITY

FORT WORTH DISTRICT

Revisions

Drawn by:
EE/TB

Project No.
CBC470400837

Date
08-2009

Sheet No.
MO.1
of 28 sheets

5242D
Bobcat

5361
4779
S185
Bobcat

AMMABLE
FLAMMABLE
FLAMMABLE

EMULSION
GMC

FIGURE 1
BUILDING IDENTIFICATION

Date Printed 4/22/94

PROPERTY NO: 029525

BUILDING NO: 02800P

BUILDING NAME: Equipment Storage

SIZE: 5,400 Square Feet

YEAR BUILT:

BUILDING DESCRIPTION: Concrete slab-on-grade with steel frame construction and sloped metal roof.

SURVEY DATE : Tuesday, August 17, 1993

INSPECTOR: JoAnne Hall

INSPECTOR: Rhonda Goeden

TABLE 4
LIST OF MATERIAL AREAS SAMPLED IN BUILDING 02800P

Date Printed 4/23/94

MATERIAL AREA	MATERIAL DESCRIPTION	QUANTITY ESTIMATE	MATERIAL CATEGORY	NUMBER OF SAMPLES OBTAINED/ ANALYZED	ASBESTOS-CONTAINING MATERIAL (Yes/No)	ASSESSMENT SCORE	RECOMMENDED ACTION

NO SUSPECT MATERIALS OBSERVED

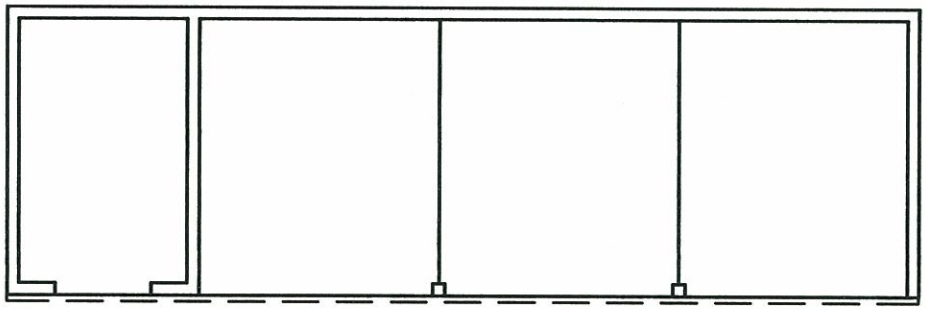

NO SUSPECT MATERIALS OBSERVED

SOURCE: SCHEMATIC DRAWING SHOWING GENERAL LOCATIONS AND RELATIONSHIPS ONLY.

ASBESTOS CONTAINING MATERIAL SURVEY

LAW ENGINEERING, INC.

DRAWN BY: PD SERVICES
DRAWING NO.: 02800P
SCALE: 1/16" = 1'-0"

APPROVED BY: W. MALEK
DATE: 5/94
REVISION:

NORTH

BUILDING PLAN
TXDOT – DISTRICT 02
SITE 029525 – BUILDING 02800P
2400 HWY 180 WEST
MINERAL WELLS, PALO PINTO

FIGURE
1

FIGURE 1
BUILDING IDENTIFICATION

Date Printed 4/22/94

PROPERTY NO: 029525

BUILDING NO: 028072

BUILDING NAME: Equipment and Storage Building

SIZE: 8,989 Square Feet

YEAR BUILT: 1963

BUILDING DESCRIPTION: Concrete slab-on-grade, elevated concrete slab (in material storage bays), steel frame construction with concrete masonry unit walls and built-up roof system.

SURVEY DATE : Tuesday, August 17, 1993

INSPECTOR: JoAnne Hall

INSPECTOR: Rhonda Goeden

TABLE 4
LIST OF MATERIAL AREAS SAMPLED IN BUILDING 028072

Date Printed 4/23/94

MATERIAL AREA	MATERIAL DESCRIPTION	QUANTITY ESTIMATE	MATERIAL CATEGORY	NUMBER OF SAMPLES OBTAINED/ ANALYZED	ASBESTOS-CONTAINING MATERIAL (Yes/No)	ASSESSMENT SCORE	RECOMMENDED ACTION
01	Floor Tile with Mastic, 9"x9", White	900 SF	M30	2 / 1	Yes	0	Operations and Maintenance Program
02	Floor Tile with Mastic, 12"x12", White	64 SF	M30	1 / 1	Yes	0	Operations and Maintenance Program
03	Floor Tile with Mastic, 12"x12", Tan	100 SF	M30	1 / 1	Yes	0	Operations and Maintenance Program
04	Cove Base with Mastic	320 LF	M34	2 / 1	No	0	None
05	Door and Window Frame Sealant	220 LF	M42	2 / 2	No	0	None
06	Wall Plaster with Texture	2,400 SF	M24	5 / 3	No	0	None
07	Wall Plaster with Texture	700 SF	M24	2 / 2	No	0	None
08	Wall and Ceiling Board with Texture	128 SF	M22	4 / 2	No	0	None
09	Ceiling Tile, 1'x1'	500 SF	M20	2 / 2	No	0	None
10	Ceiling Tile, 1'x1'	120 SF	M20	1 / 1	No	0	None
11	Ceiling Plaster with Texture	400 SF	M24	3 / 2	No	0	None
12	Exterior Cementitious Soffit Plaster	320 SF	M25	2 / 2	No	0	None
13	Air Duct Insulation	60 SF	T26	1 / 1	Yes	16	Operations and Maintenance Program
14	Roof Mastic	9,000 SF	M06	1 / 1	Yes	0	Operations and Maintenance Program

FIGURE 2
ASBESTOS-CONTAINING MATERIAL AREA SUMMARY

Date Printed 4/23/94

Building Name: Equipment and Storage Building

Building No.: 028072

Material Area No.: 01

Material Description: Floor Tile with Mastic, 9"x9", White

Quantity Est.: 900 Square Feet

Samples Obtained / Analyzed : 2 / 1

Assessment Score : 0

Recommended Action : Operations and Maintenance Program

Material Removal Cost Category: M30
Vinyl Floor Tile

Opinion of Removal Cost : $2,250

General Notes : Composite sample <1% asbestos. Chrysotile asbestos in both tile (<1%) and mastic (5%).

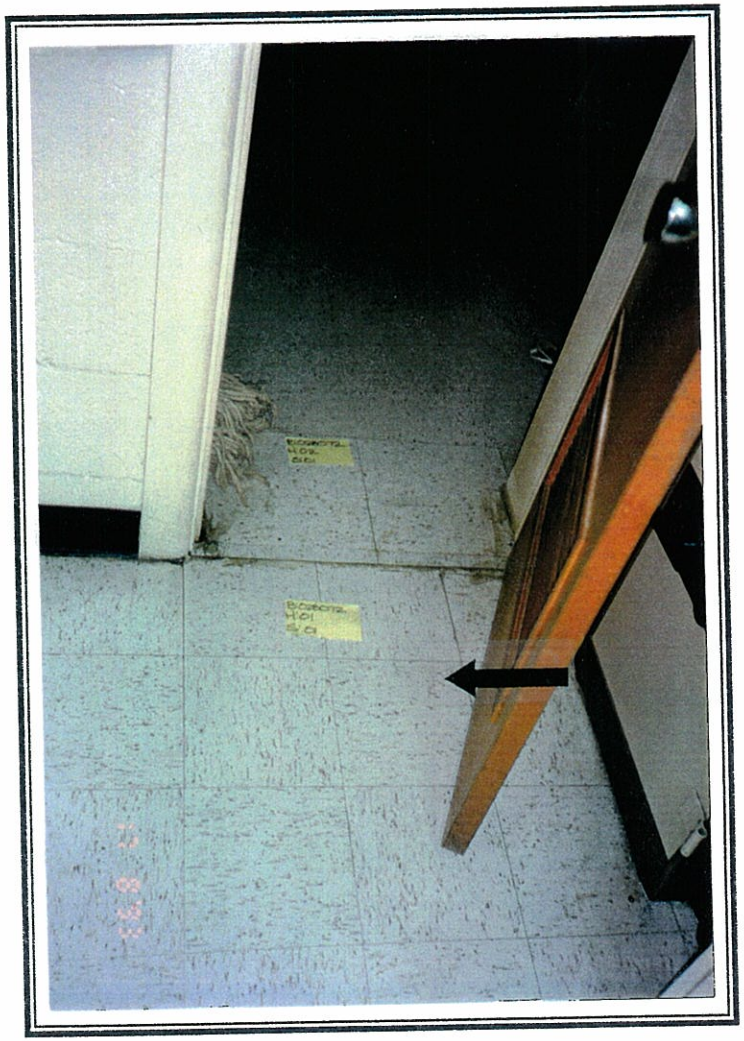

FIGURE 2
ASBESTOS-CONTAINING MATERIAL AREA SUMMARY

Date Printed 4/23/94

Building Name: Equipment and Storage Building

Building No.: 028072

Material Area No.: 02

Material Description: Floor Tile with Mastic, 12"x12", White

Quantity Est.: 64 Square Feet

Samples Obtained / Analyzed : 1 / 1

Assessment Score : 0

Recommended Action : Operations and Maintenance Program

Material Removal Cost Category: M30
Vinyl Floor Tile

Opinion of Removal Cost : $300

General Notes : Composite sample <1% asbestos. Chrysotile asbestos in both tile (<1%) and mastic (5%).

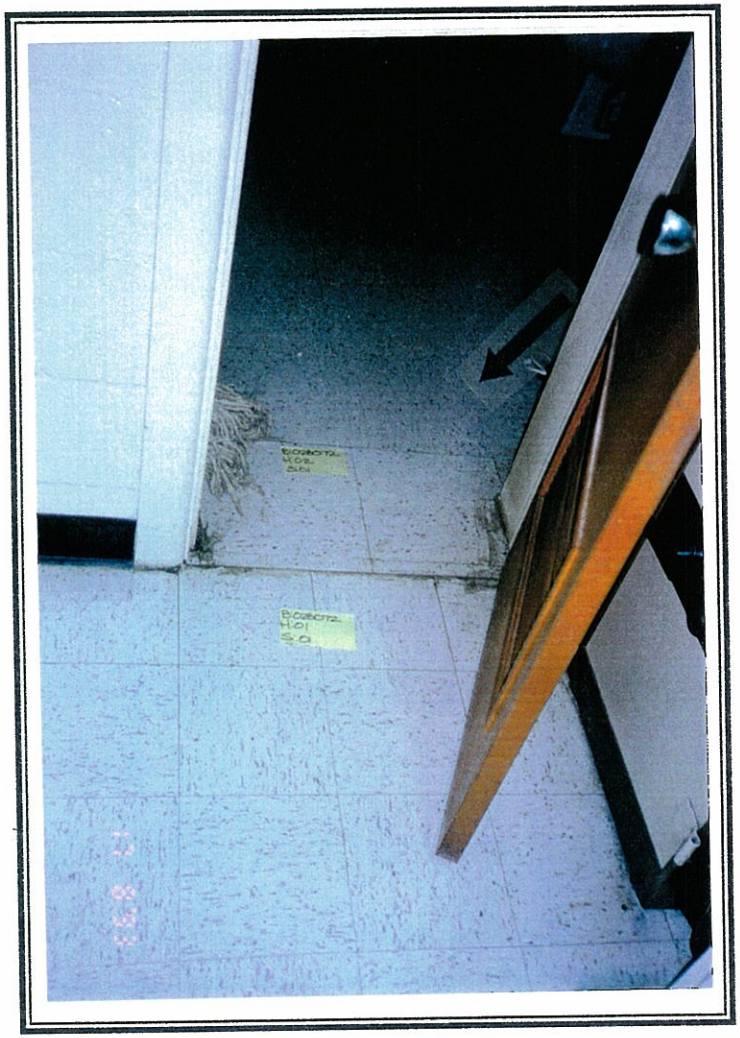

FIGURE 2
ASBESTOS-CONTAINING MATERIAL AREA SUMMARY

Date Printed 4/23/94

Building Name: Equipment and Storage Building

Building No.: 028072

Material Area No.: 03

Material Description: Floor Tile with Mastic, 12"x12", Tan

Quantity Est.: 100 Square Feet

Samples Obtained / Analyzed : 1 / 1

Assessment Score : 0

Recommended Action : Operations and Maintenance Program

Material Removal Cost Category: M30
Vinyl Floor Tile

Opinion of Removal Cost : $300

General Notes : Composite sample <1% asbestos. Chrysotile asbestos confined to mastic (2%).

FIGURE 2
ASBESTOS-CONTAINING MATERIAL AREA SUMMARY

Date Printed 4/23/94

Building Name: Equipment and Storage Building

Building No.: 028072

Material Area No.: 13

Material Description: Air Duct Insulation

Quantity Est.: 60 Square Feet

Samples Obtained / Analyzed : 1 / 1

Assessment Score : 16

Recommended Action : Operations and Maintenance Program

Material Removal Cost Category: T26
Air Duct Insulation

Opinion of Removal Cost : $300

General Notes :

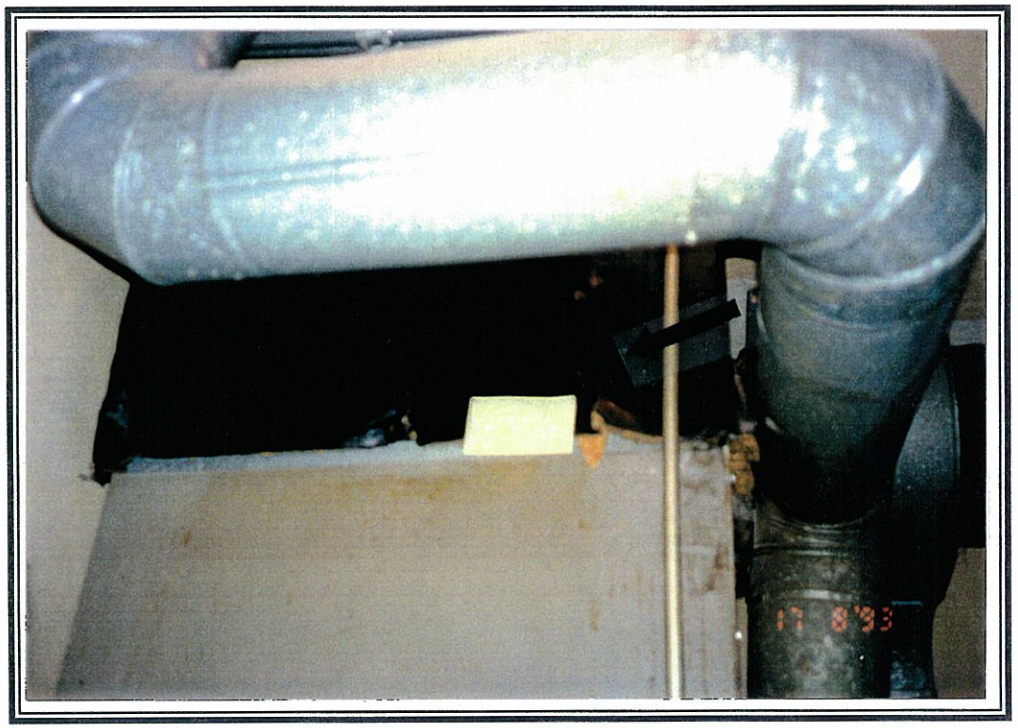

FIGURE 2
ASBESTOS-CONTAINING MATERIAL AREA SUMMARY

Date Printed 4/23/94

Building Name: Equipment and Storage Building

Building No.: 028072

Material Area No.: 14

Material Description: Roof Mastic

Quantity Est.: 9,000 Square Feet

Samples Obtained / Analyzed : 1 / 1

Assessment Score : 0

Recommended Action : Operations and Maintenance Program

Material Removal Cost Category: M06
Roof Mastics

Opinion of Removal Cost : $22,500

General Notes :

MATERIAL PHOTOGRAPH NOT AVAILABLE

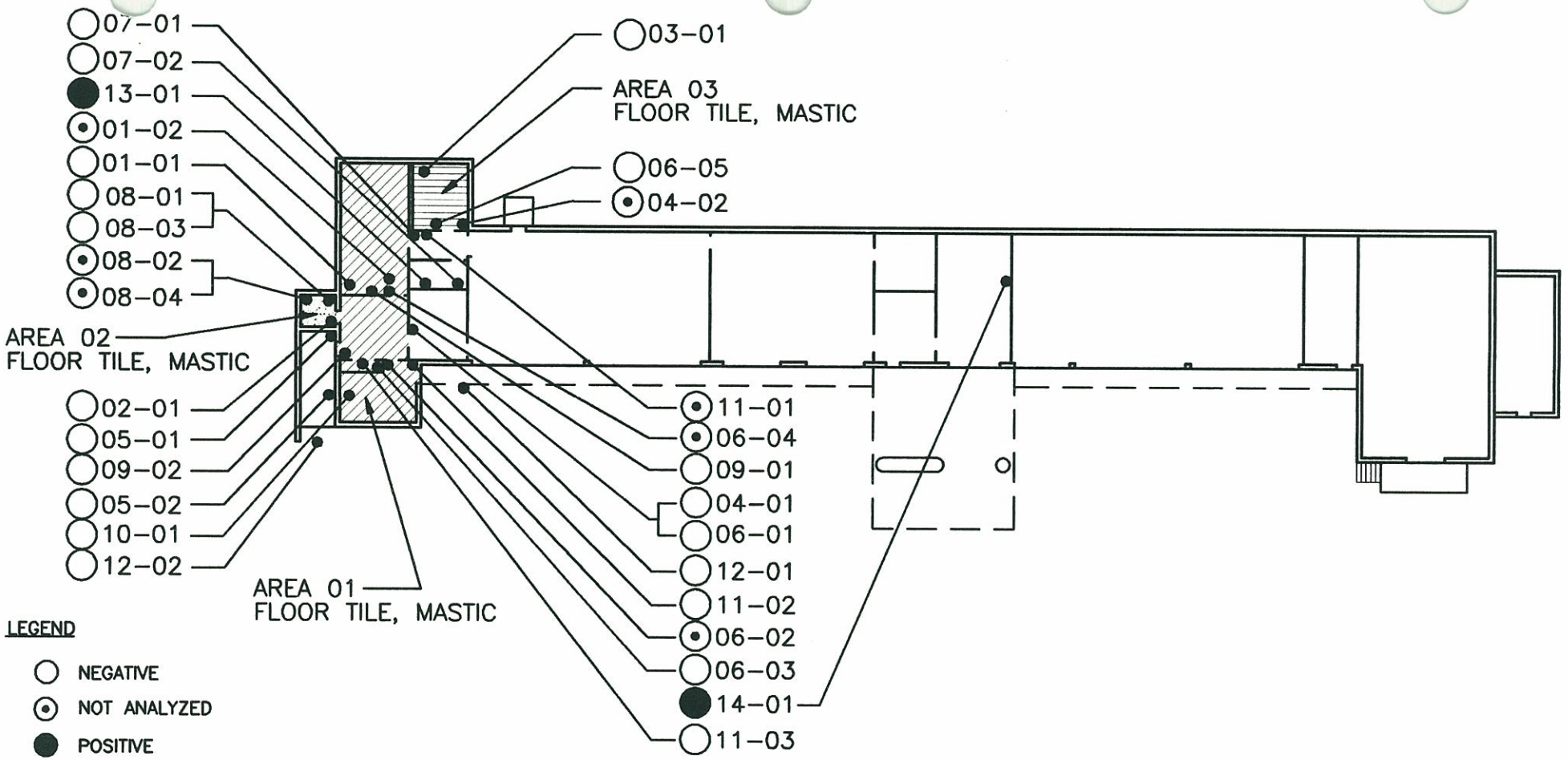

LEGEND

- NEGATIVE
- NOT ANALYZED
- POSITIVE

01-01

- SAMPLE I.D. NUMBER
- MATERIAL AREA I.D. NUMBER

REFER TO SUMMARY OF MATERIAL SAMPLE ANALYSIS FOR ASBESTOS IDENTIFICATION

HOMOGENEOUS MATERIAL AREAS NOT IDENTIFIED WITH HATCHING ON PLAN	
AREA 13	AIR DUCT INSULATION
AREA 14	ROOF MASTIC

SOURCE: SCHEMATIC DRAWING SHOWING GENERAL LOCATIONS AND RELATIONSHIPS ONLY.
SOURCE: DRAWINGS REPRODUCED FROM EXISTING TEXAS DEPT. OF TRANSPORTATION FILES.

ASBESTOS CONTAINING MATERIAL SURVEY

LAW ENGINEERING, INC.

DRAWN BY: PD SERVICES
DRAWING NO.: 028072
SCALE: 1/32" = 1'-0"

APPROVED BY: W. MALEK
DATE: 5/94
REVISION:

NORTH

MATERIAL AREA SAMPLE LOCATION PLAN

TXDOT – DISTRICT 02
SITE 029525 – BUILDING 028072
2400 HWY 180 WEST
MINERAL WELLS, PALO PINTO

FIGURE

1

FIGURE 1
BUILDING IDENTIFICATION

Date Printed 4/22/94

PROPERTY NO: 029525

BUILDING NO: 02800O

BUILDING NAME: Generator and Radio Shed

SIZE: 100 Square Feet

YEAR BUILT:

BUILDING DESCRIPTION: Concrete slab-on-grade with wood frame construction, wood siding, and sloped shingle roof.

SURVEY DATE : Tuesday, August 17, 1993

INSPECTOR: JoAnne Hall

INSPECTOR: Rhonda Goeden

TABLE 4
LIST OF MATERIAL AREAS SAMPLED IN BUILDING 02800O

Date Printed 4/23/94

MATERIAL AREA	MATERIAL DESCRIPTION	QUANTITY ESTIMATE	MATERIAL CATEGORY	NUMBER OF SAMPLES OBTAINED/ ANALYZED	ASBESTOS-CONTAINING MATERIAL (Yes/No)	ASSESSMENT SCORE	RECOMMENDED ACTION
01	Roof Shingle	200 SF	M10	1 / 1	No	0	None

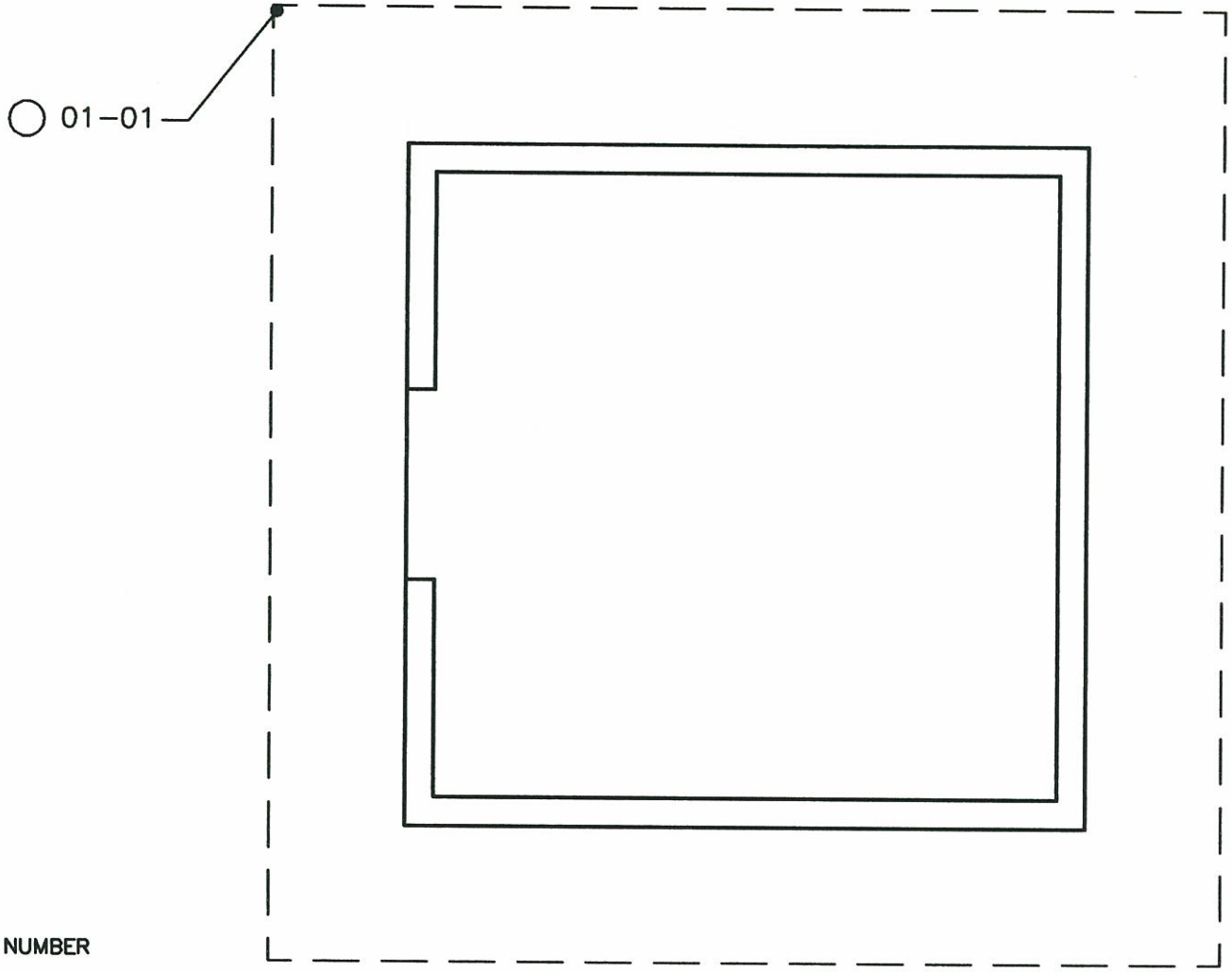

LEGEND

- ○ NEGATIVE
- ⊙ NOT ANALYZED
- ● POSITIVE

01-01

- SAMPLE I.D. NUMBER
- MATERIAL AREA I.D. NUMBER

REFER TO SUMMARY OF MATERIAL SAMPLE ANALYSIS FOR ASBESTOS IDENTIFICATION

NO ASBESTOS-CONTAINING MATERIALS IDENTIFIED

SOURCE: SCHEMATIC DRAWING SHOWING GENERAL LOCATIONS AND RELATIONSHIPS ONLY.

ASBESTOS CONTAINING MATERIAL SURVEY

LAW ENGINEERING, INC.

DRAWN BY: PD SERVICES	APPROVED BY: W. MALEK
DRAWING NO.: 028000	DATE: 5/94
SCALE: N.T.S.	REVISION:

NORTH

SAMPLE LOCATION PLAN

TXDOT – DISTRICT 02

SITE 029525 – BUILDING 028000

2400 HWY 180 WEST

MINERAL WELLS, PALO PINTO

FIGURE

1

FIGURE 1
BUILDING IDENTIFICATION

Date Printed 4/22/94

PROPERTY NO: 029525

BUILDING NO: 02800Q

BUILDING NAME: Sign Shed

SIZE: 64 Square Feet

YEAR BUILT:

BUILDING DESCRIPTION: Wood frame construction with sloped shingle roof. Exterior walls constructed from old highway signs.

SURVEY DATE : Tuesday, August 17, 1993

INSPECTOR: JoAnne Hall

INSPECTOR: Rhonda Goeden

TABLE 4
LIST OF MATERIAL AREAS SAMPLED IN BUILDING 02800Q

Date Printed 4/23/94

MATERIAL AREA	MATERIAL DESCRIPTION	QUANTITY ESTIMATE	MATERIAL CATEGORY	NUMBER OF SAMPLES OBTAINED/ ANALYZED	ASBESTOS-CONTAINING MATERIAL (Yes/No)	ASSESSMENT SCORE	RECOMMENDED ACTION
01	Roof Shingle	64 SF	M10	1 / 1	No	0	None

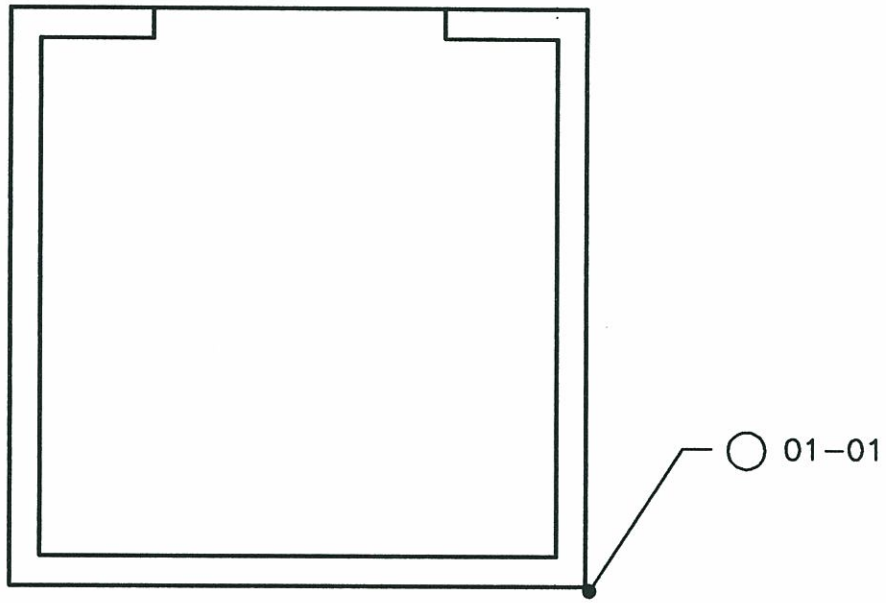

NO ASBESTOS–CONTAINING MATERIALS IDENTIFIED

LEGEND

- ○ NEGATIVE
- ⊙ NOT ANALYZED
- ● POSITIVE

01–01

- 01 — SAMPLE I.D. NUMBER
- 01 — MATERIAL AREA I.D. NUMBER

REFER TO SUMMARY OF MATERIAL SAMPLE ANALYSIS FOR ASBESTOS IDENTIFICATION

SOURCE: SCHEMATIC DRAWING SHOWING GENERAL LOCATIONS AND RELATIONSHIPS ONLY.

ASBESTOS CONTAINING MATERIAL SURVEY

LAW ENGINEERING, INC.

DRAWN BY: PD SERVICES	APPROVED BY: W. MALEK
DRAWING NO.: 02800Q	DATE: 5/94
SCALE: N.T.S.	REVISION:

NORTH

SAMPLE LOCATION PLAN

TXDOT – DISTRICT 02
SITE 029525 – BUILDING 02800Q
2400 HWY 180 WEST
MINERAL WELLS, PALO PINTO

FIGURE

1

TABLE 5
SUMMARY OF ASBESTOS-CONTAINING MATERIALS
PROPERTY 029525

Date Printed 4/23/94

BUILDING NO.	BUILDING NAME	MATERIAL AREA	MATERIAL DESCRIPTION	QUANTITY ESTIMATE	ASSESSMENT SCORE	RECOMMENDED ACTION	REMOVAL COST
028072	Equipment and Storage Building	01	Floor Tile with Mastic, 9"x9", White	900 SF	0	Operations and Maintenance Program	$2,250
028072	Equipment and Storage Building	02	Floor Tile with Mastic, 12"x12", White	64 SF	0	Operations and Maintenance Program	$300
028072	Equipment and Storage Building	03	Floor Tile with Mastic, 12"x12", Tan	100 SF	0	Operations and Maintenance Program	$300
028072	Equipment and Storage Building	13	Air Duct Insulation	60 SF	16	Operations and Maintenance Program	$300
028072	Equipment and Storage Building	14	Roof Mastic	9,000 SF	0	Operations and Maintenance Program	$22,500

TABLE 6
SUMMARY OF MATERIAL SAMPLE LABORATORY ANALYSES
PROPERTY 029525

Date Printed 4/23/94

BUILDING NO.	AREA NO.	SAMPLE NO.	LAB ID NO.	MATERIAL DESCRIPTION	DATE ANALYZED	ACM (Yes/No)	PLM RESULTS
02800O	01	01	D30808	Roof Shingle	9/21/93	No	Cellulose, Aggregate, Binders
02800Q	01	01	D31521	Roof Shingle	10/14/93	No	Glass/Min. Wool, Aggregate, Binders
028072	01	01	D31266	Floor Tile with Mastic, 9"x9", White	10/4/93	No	<1% Chrysotile Asbestos, Aggregate, Mastic, Vinyl, (Chrysotile in both tile (<1%) and black mastic (5%).)
028072	01	02	D31267	Floor Tile with Mastic, 9"x9", White		No	Material area assumed asbestos-containing. Sample not analyzed
028072	02	01	D31268	Floor Tile with Mastic, 12"x12", White	10/4/93	No	<1% Chrysotile Asbestos, Aggregate, Mastic, Vinyl, (Chrysotile in both tile (<1%) and black mastic (5%).)
028072	03	01	D31269	Floor Tile with Mastic, 12"x12", Tan	10/4/93	No	<1% Chrysotile Asbestos, Aggregate, Mastic, Vinyl, (Chrysotile confined to mastic (2%).)
028072	04	01	D31270	Cove Base with Mastic	10/4/93	No	Aggregate, Mastic, Vinyl
028072	04	02	D31271	Cove Base with Mastic		No	Sample not analyzed
028072	05	01	D31272	Door and Window Frame Sealant	10/4/93	No	<1% Chrysotile Asbestos, Cellulose, Aggregate, Binders, Fibrous Talc
028072	05	02	D31273	Door and Window Frame Sealant	10/4/93	No	<1% Chrysotile Asbestos, Cellulose, Aggregate, Binders, Fibrous Talc, (Chrysotile confined to layer 1 beige nonfibrous material (<1%).)
028072	06	01	D31274	Wall Plaster with Texture	10/4/93	No	Aggregate, Binders, Mastic
028072	06	02	D31275	Wall Plaster with Texture		No	Sample not analyzed
028072	06	03	D31276	Wall Plaster with Texture	10/4/93	No	Aggregate, Binders
028072	06	04	D31277	Wall Plaster with Texture		No	Sample not analyzed
028072	06	05	D31278	Wall Plaster with Texture	10/4/93	No	Aggregate, Binders
028072	07	01	D31279	Wall Plaster with Texture	10/4/93	No	Aggregate, Binders
028072	07	02	D31280	Wall Plaster with Texture	10/4/93	No	Aggregate, Binders
028072	08	01	D31281	Wall and Ceiling Board with Texture	10/4/93	No	<1% Chrysotile Asbestos, Cellulose, Aggregate, Binders, Fibrous Talc, (Chrysotile confined to texture (<1%).)
028072	08	02	D31282	Wall and Ceiling Board with Texture		No	Sample not analyzed
028072	08	03	D31283	Wall and Ceiling Board with Texture	10/4/93	No	<1% Chrysotile Asbestos, Cellulose, Aggregate, Binders, (Chrysotile confined to texture (<1%).)

TABLE 6
SUMMARY OF MATERIAL SAMPLE LABORATORY ANALYSES
PROPERTY 029525

Date Printed 4/23/94

BUILDING NO.	AREA NO.	SAMPLE NO.	LAB ID NO.	MATERIAL DESCRIPTION	DATE ANALYZED	ACM (Yes/No)	PLM RESULTS
028072	08	04	D31284	Wall and Ceiling Board with Texture		No	Sample not analyzed
028072	09	01	D31285	Ceiling Tile, 1'x1'	10/6/93	No	Glass/Min. Wool, Cellulose, Perlite, Binders
028072	09	02	D31286	Ceiling Tile, 1'x1'	10/6/93	No	Glass/Min. Wool, Cellulose, Perlite, Binders
028072	10	01	D31287	Ceiling Tile, 1'x1'	10/6/93	No	<1% Tremolite Asbestos, Cellulose, Binders, Fibrous Talc, (Tremolite confined to paint (<1%).)
028072	11	01	D31288	Ceiling Plaster with Texture		No	Sample not analyzed
028072	11	02	D31289	Ceiling Plaster with Texture	10/6/93	No	<1% Tremolite Asbestos, Cellulose, Aggregate, Binders, (Tremolite confined to paint (<1%).)
028072	11	03	D31290	Ceiling Plaster with Texture	10/6/93	No	Cellulose, Aggregate, Binders
028072	12	01	D31291	Exterior Cementitious Soffit Plaster	10/6/93	No	Cellulose, Aggregate, Binders, Fibrous Talc
028072	12	02	D31292	Exterior Cementitious Soffit Plaster	10/6/93	No	Cellulose, Aggregate, Binders, Fibrous Talc
028072	13	01	D31293	Air Duct Insulation	10/6/93	Yes	5% Chrysotile Asbestos, (Chrysotile confined to layer 1 felt (50%).)
028072	14	01	D31294	Roof Mastic	10/6/93	Yes	15% Chrysotile Asbestos

ATTACHMENT D5
Fort Worth District Headquarters (DHQ) Facilities
Renovation of Existing Fort Worth District Lab

Two separate facilities will be built at the Fort Worth District Headquarters (DHQ), 2501 Southwest Loop, Fort Worth, TX 76115:

- South Tarrant Area Engineering & Maintenance Facility
- Renovation of Existing Fort Worth District Laboratory

A more detailed description of Renovation of Existing Fort Worth District Lab follows:

The Existing District Lab is located on the northwest portion of the District Headquarters Site, facing McCart Street, as shown on drawing DHQS-1. All common utilities are currently available at the site. Natural gas, water, sewer, and telephone service are currently in use at the site. See **ATTACHMENT A** for more detailed site information. Interior of lab will be reconfigured for better function. Private Entity's Architect will work with staff to reconfigure spaces. This will require some reconfiguring of electrical and plumbing.

Scope of work as follows:

Exterior

- New roofing. Remove existing insulation and roof membrane. Install new tapered insulation and Modified Bitumen roofing membrane. Replace all flashing, gutters, downspouts, and splash blocks.
- Replace all window walls. Remove all existing steel window walls and replace with a new aluminum thermally broken, double glazed system, matching profile of existing steel system.
- Replace all exterior doors.
- Remove and replace damaged and settled sidewalks at building entrances.
- Remove all existing landscaping. Design and install new landscaping.
- Remove existing parging on foundation wall and replace with a paint based coating.

Interior

- Interior spaces will, in general, be gutted of all finishes, furnishings, and ceilings. Partitions to remain in place.
- Renovate existing toilets to provide handicapped access.
- Repair any water damaged plaster that will remain exposed.
- In office/admin areas, remove existing plaster ceiling and replace with new acoustical lay-in ceilings.
- Replace all lighting with new modernized lighting system.
- Remove any existing vct flooring and replace with new.
- Clean and reseal all existing exposed concrete flooring.
- Replace existing HVAC systems with new systems.
- Repaint all areas that are currently painted.
- Replace all casework with new casework

The following items will be included as a construction allowance for the proposal only. All will be incorporated into the **PROJECT** during the design phase. Design cost shall not come out of the allowance but be included in the proposed overall design fee:

- Landscaping and Irrigation: $30,000.00. **PRIVATE ENTITY** to provide design and incorporate into construction documents.
- Furniture and Systems Furniture: $40,000.00 **TxDOT** will use its state contracts to work with furniture vendor. **TxDOT** will provide furniture design and arrange for installation. **PRIVATE ENTITY** will provide a diagrammatic layout of systems furniture in the construction documents (see attachment G) and design electrical and mechanical to provide for systems furniture. During construction, **PRIVATE ENTITY** will make final electrical connections to systems furniture, and make payment to furniture vendor.

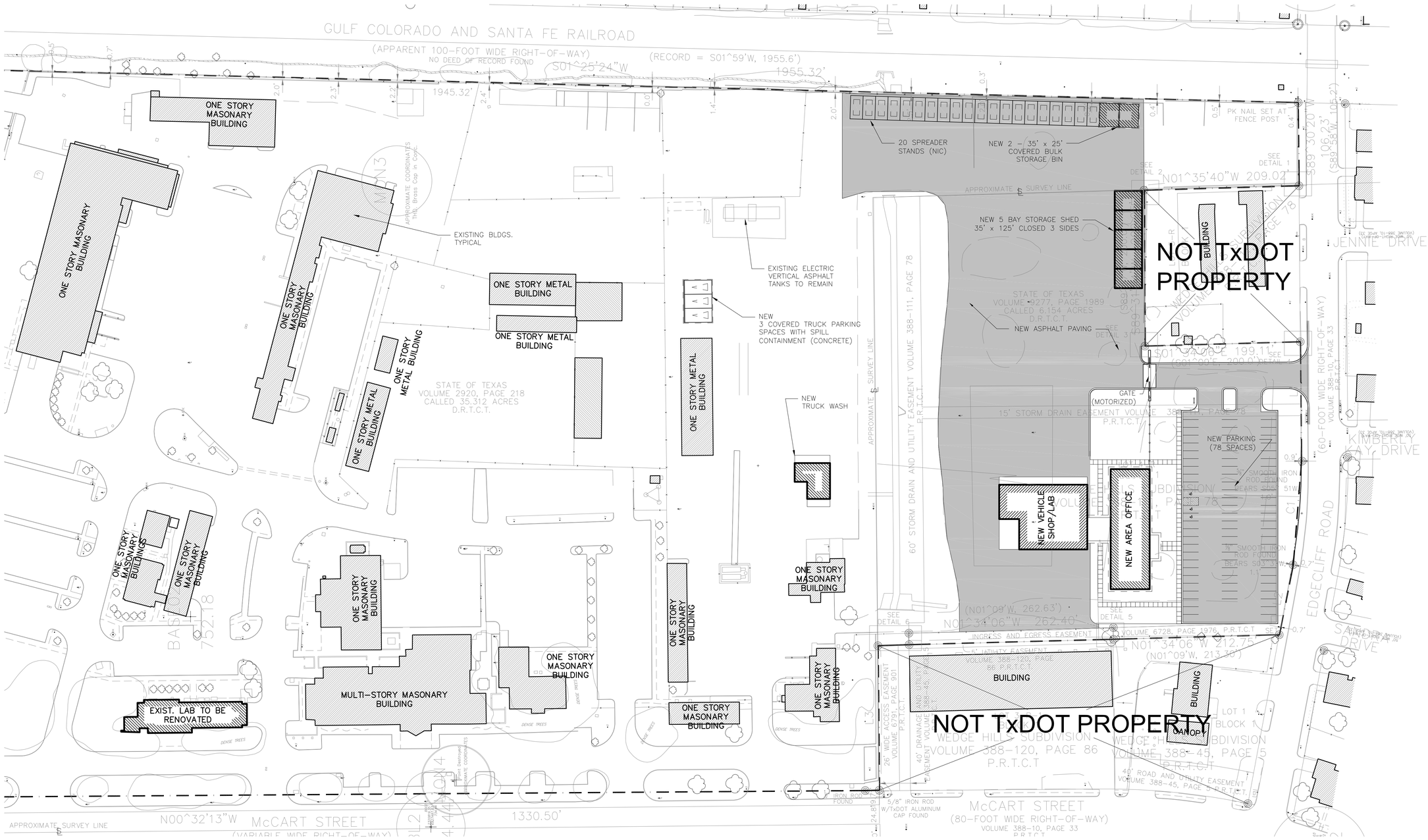

1 SITE PLAN
SCALE: 1/64" = 1'-0"

PLAN NORTH

0 25' 50' 100' 200'

SITE PLAN - FORT WORTH DISTRICT HEADQUARTERS CAMPUS

NOTE: THIS DRAWING WAS CREATED FOR PRODUCTION ON 22" x 34" SHEET SIZE. DO NOT SCALE PRINTS.

CADFILE: T:\MNTFMID02FTW\CBC4704-00-837\02-77-4704\00837\Acad\South Tarrant AE-MF-District Lab\ARCH\DHQS-1.dwg Plotted: Thu, Aug. 26, 2010 @ 10:40 AM By: TBARRE2

Texas Department of Transportation
125 E. 11th Street
Austin, Texas 78701-2483
(512) 416-3048

Copyright © 2005 Texas Department of Transportation

THIS DOCUMENT IS RELEASED FOR THE PURPOSE OF INFORMATION ONLY
NOT FOR REGULATORY APPROVAL, PERMITTING, OR CONSTRUCTION.

FORT WORTH DISTRICT HEADQUARTERS CAMPUS
S. TARRANT AREA ENGINEER & MAINTENANCE FACILITY
RENOVATION OF EXISTING DISTRICT LAB

Revisions
1
2
3

Drawn by: BH
Project No. CBC4704-00-837
Date 08-2010
Sheet No.

DHQS.1
of X sheets

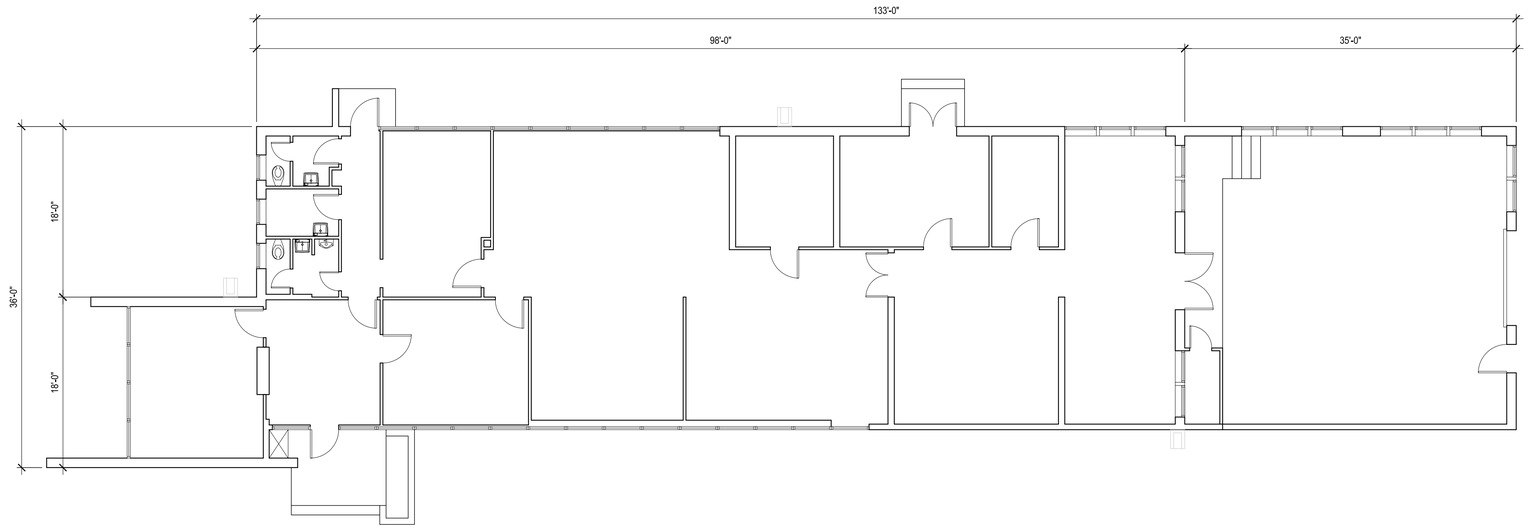

1 EXISTING FLOOR PLAN
SCALE: 1/8" = 1'-0"

PLAN NORTH

EXISTING FLOOR PLAN - RENOVATION OF EXISTING DISTRICT LAB

NOTE: THIS DRAWING WAS CREATED FOR PRODUCTION ON 22" x 34" SHEET SIZE. DO NOT SCALE PRINTS.

CADFILE: T:\MNTFMID02FTW\CBC4704-00-837\02-77-4704008837\Acad\Arch\CLO-1.dwg Plotted: Fri, Aug. 13, 2010 @ 11:02 AM By: TBARRE2

Texas Department of Transportation
125 E. 11th Street
Austin, Texas 78701-2483
(512) 416-3048
Copyright © 2005 Texas Department of Transportation

THIS DOCUMENT IS RELEASED FOR THE PURPOSE OF
INFORMATION ONLY
NOT FOR REGULATORY
APPROVAL, PERMITTING,
OR CONSTRUCTION.

RENOVATION OF EXISTING DISTRICT LAB

2501 SOUTHWEST LOOP
FORT WORTH DISTRICT HEADQUARTERS

Revisions

Drawn by:
AV
Project No.
CBC470400837
Date
08-2010
Sheet No.

REDL-1
of sheets

EXIT

District
Lab

THOMAS

EXIT
SAFETY'S WORTH IT!

EXIT

Hand Washing Habits
HAYWARD BAKER

EXIT

Viscometer
igloo

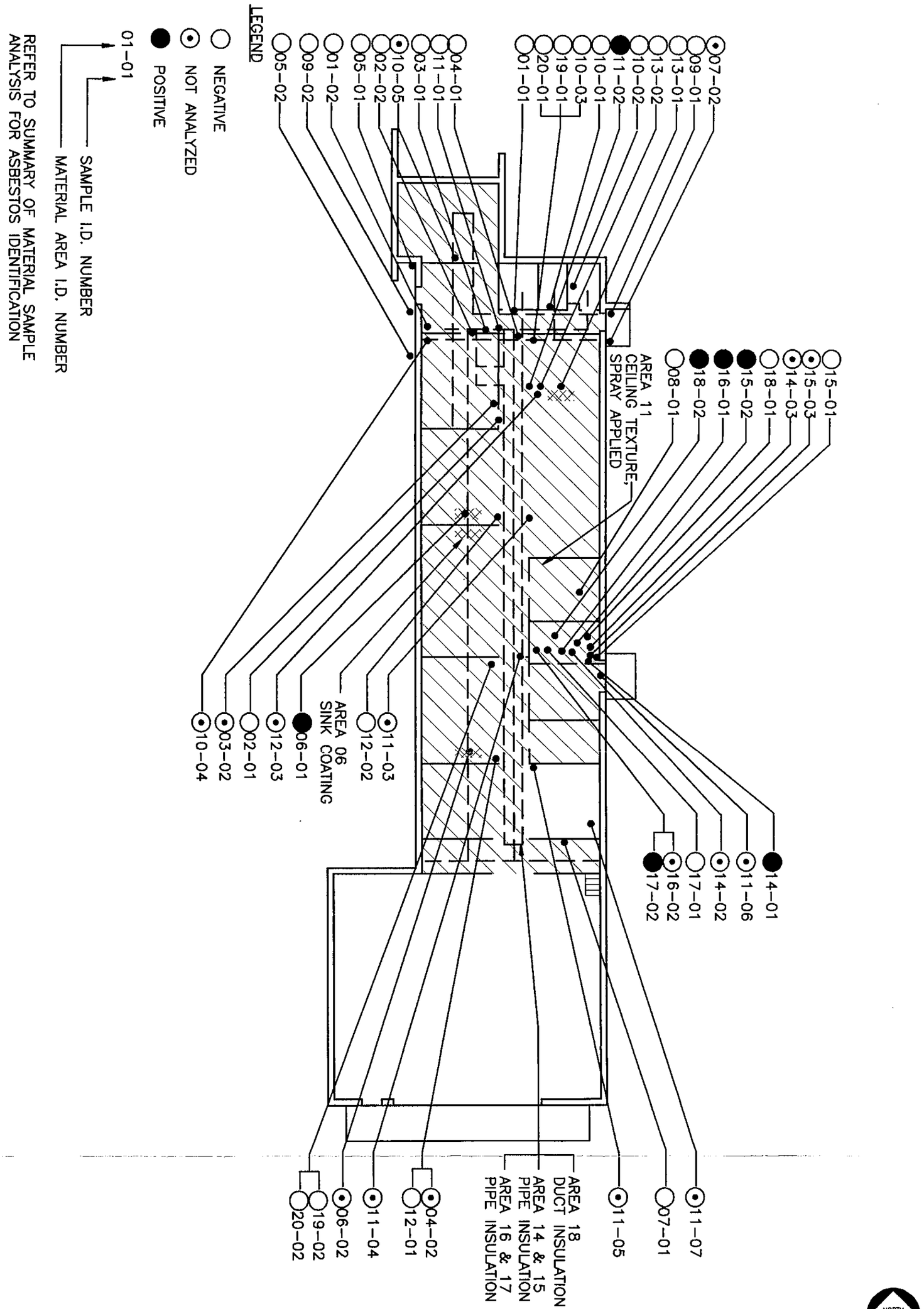

SOURCE: SCHEMATIC DRAWING SHOWING GENERAL LOCATIONS AND RELATIONSHIPS ONLY.

SOURCE: DRAWINGS REPRODUCED FROM EXISTING TEXAS DEPT. OF TRANSPORTATION FILES.

ASBESTOS CONTAINING MATERIAL SURVEY

LAW ENGINEERING, INC.

DRAWN BY: PD SERVICES
DRAWING NO.: 028046
SCALE: 1/16" = 1'-0"

APPROVED BY: W. MALEK
DATE: 5/94
REVISION:

MATERIAL AREA SAMPLE LOCATION PLAN

TXDOT – DISTRICT 02
SITE 029523 – BUILDING 028046
2501 SOUTHWEST LOOP 820
FORT WORTH, TARRANT

FIGURE

1

BUILDING CONDITION ASSESSMENT SUMMARY

Building Number 028046 **District Laboratory**

Located on Site 029523 2501 Southwest Loop 820, Fort Worth (DHQ) 76115

Survey Date: March 31, 1995

Building Description: Concrete foundation with elevated floor slab, masonry walls, and metal roof deck with built-up roof system. Access to crawlspace

Building Size: 4,368 Square Feet

Building Replacement Value: $380,016

System Condition Rating Score Summary

	Points Earned	Total Possible
Structure	20	27
Exterior Wall System	6	11
Roofs	2	7
Interiors	6	15
Heating, Ventilation, and Air Conditioning	10	20
Electrical	5	10
Plumbing	3	5
Elevator	2	2
Safety	3	3

TOTAL BUILDING CONDITION RATING SCORE (1-100) **57**

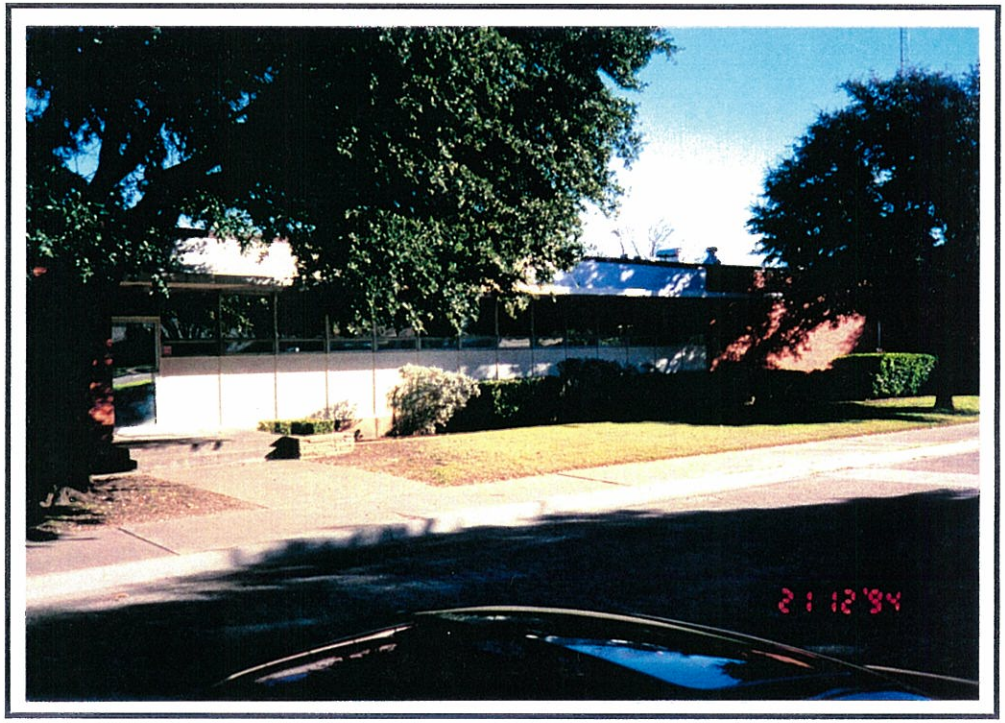

BUILDING CURRENT NEEDS

SYSTEM	ITEM DESCRIPTION	QUANTITY	UNITS	REPAIR and REPLACEMENT COSTS YEARS 1995 - 1997
Exterior Walls	Joint Sealant	105	LF	$470
Exterior Walls	Paint on Operable Strip Windows Systems	18	SF	$170
Interiors - Floor	Ceramic Tile on Elevated Concrete Floor	80	SF	$851
Interiors - Wall Finishes	Ceramic Tile	492	SF	$3,472
Interiors - Wall Finishes	Paint	246	SF	$146
Interiors - Wall Finishes	Paint	2,502	SF	$1,529
Interiors - Ceilings	Painted Smooth Finish on Plaster on Metal Lath	2,894	SF	$1,633
Interiors - Lighting	Fixture: Fluorescent; Size: 2' by 4'; Lens: None; Mounting: Recessed	4	EA	$991

Plumbing - Water Heaters	Domestic Hot Water Heaters - 50 gallons - Natural Gas	1	EA	$726
Exterior Wall and Window Repairs	Remove and Replace Sections of Stucco	120	SF	$556
Mechanical Repairs	Condenser or Pump Case Corrosion - Clean and Paint	1	EA	$164
Mechanical Repairs	Replace Pipe Insulation	15	LF	$119

FIGURE 1
BUILDING IDENTIFICATION

Date Printed 4/22/94

PROPERTY NO: 029523

BUILDING NO: 028046

BUILDING NAME: District Laboratory

SIZE: 4,581 Square Feet

YEAR BUILT: 1959

BUILDING DESCRIPTION: Concrete foundation with elevated floor slab, masonry walls, and metal roof deck with built-up roof system. Access to crawlspace observed.

SURVEY DATE : Monday, August 02, 1993

INSPECTOR: JoAnne Hall

INSPECTOR: Rhonda Goeden

TABLE 4
LIST OF MATERIAL AREAS SAMPLED IN BUILDING 028046

Date Printed 4/22/94

MATERIAL AREA	MATERIAL DESCRIPTION	QUANTITY ESTIMATE	MATERIAL CATEGORY	NUMBER OF SAMPLES OBTAINED/ ANALYZED	ASBESTOS-CONTAINING MATERIAL (Yes/No)	ASSESSMENT SCORE	RECOMMENDED ACTION
01	Floor Tile with Mastic, 9"x9", Grey	500 SF	M30	2 / 2	No	0	None
02	Floor Tile with Mastic, 12"x12", Grey	300 SF	M30	2 / 2	No	0	None
03	Cove Base with Mastic	100 LF	M34	2 / 1	No	0	None
04	Cove Base with Mastic	300 LF	M34	2 / 1	No	0	None
05	Window and Door Frame Sealant	200 LF	M42	2 / 2	No	0	None
06	Sink Acoustical Coating	6 Ea	M40	2 / 1	Yes	0	Operations and Maintenance Program
07	Window Glazing Compound	600 LF	M56	2 / 1	No	0	None
08	Ceiling Tile, 2'x4'	100 SF	M16	1 / 1	No	0	None
09	Exterior Cementitious Soffit Plaster	100 SF	M25	2 / 2	No	0	None
10	Ceiling and Wall Plaster with Texture	5,000 SF	M24	5 / 3	No	0	None
11	Ceiling Texture, Spray-Applied	4,400 SF	S01	7 / 4	Yes	16	Operations and Maintenance Program
12	Countertop	420 SF	M15	3 / 2	No	0	None
13	Wallboard with Texture	200 SF	M22	2 / 2	No	0	None
14	Pipe Insulation, Straight	100 LF	T20	3 / 1	Yes	16	Operations and Maintenance Program
15	Pipe Insulation, Fitting	50 Ea	T16	3 / 2	Yes	16	Operations and Maintenance Program
16	Pipe Insulation, Straight	50 LF	T20	2 / 1	Yes	16	Operations and Maintenance Program
17	Pipe Insulation, Fitting	20 Ea	T16	2 / 2	Yes	16	Operations and Maintenance Program
18	Air Duct Insulation Seam Tape and Mastic	175 LF	T28	2 / 2	Yes	10	Operations and Maintenance Program
19	Pipe Insulation, Straight	800 LF	T20	2 / 2	No	0	None
20	Pipe Insulation, Fitting	100 Ea	T16	2 / 2	No	0	None

FIGURE 2
ASBESTOS-CONTAINING MATERIAL AREA SUMMARY

Date Printed 4/22/94

Building Name: District Laboratory

Building No.: 028046

Material Area No.: 06

Material Description: Sink Acoustical Coating

Quantity Est.: 6 Each

Samples Obtained / Analyzed : 2 / 1

Assessment Score : 0

Recommended Action : Operations and Maintenance Program

Material Removal Cost Category: M40
Sink Acoustic Coating

Opinion of Removal Cost : $300

General Notes :

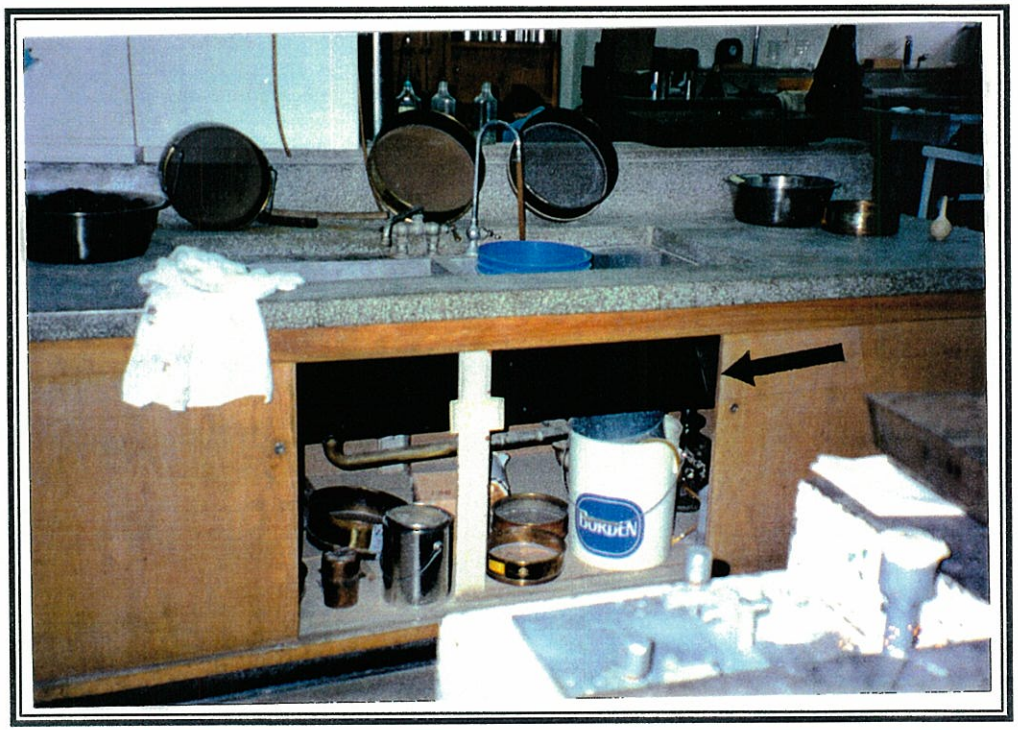

FIGURE 2
ASBESTOS-CONTAINING MATERIAL AREA SUMMARY

Date Printed 4/22/94

Building Name: District Laboratory

Building No.: 028046

Material Area No.: 11

Material Description: Ceiling Texture, Spray-Applied

Quantity Est.: 4,400 Square Feet

Samples Obtained / Analyzed : 7 / 4

Assessment Score : 16

Recommended Action : Operations and Maintenance Program

Material Removal Cost Category: S01
Ceiling Texture on Plaster

Opinion of Removal Cost : $57,200

General Notes :

FIGURE 2
ASBESTOS-CONTAINING MATERIAL AREA SUMMARY

Date Printed 4/22/94

Building Name: District Laboratory

Building No.: 028046

Material Area No.: 14

Material Description: Pipe Insulation, Straight

Quantity Est.: 100 Lineal Feet

Samples Obtained / Analyzed : 3 / 1

Assessment Score : 16

Recommended Action : Operations and Maintenance Program

Material Removal Cost Category: T20
Pipe Insulation - Straight

Opinion of Removal Cost : $1,200

General Notes : Piping connected to boiler.

FIGURE 2
ASBESTOS-CONTAINING MATERIAL AREA SUMMARY

Date Printed 4/22/94

Building Name: District Laboratory

Building No.: 028046

Material Area No.: 15

Material Description: Pipe Insulation, Fitting

Quantity Est.: 50 Each

Samples Obtained / Analyzed : 3 / 2

Assessment Score : 16

Recommended Action : Operations and Maintenance Program

Material Removal Cost Category: T16
Pipe Insulation - Fittings

Opinion of Removal Cost : $1,750

General Notes : Piping connected to boiler.

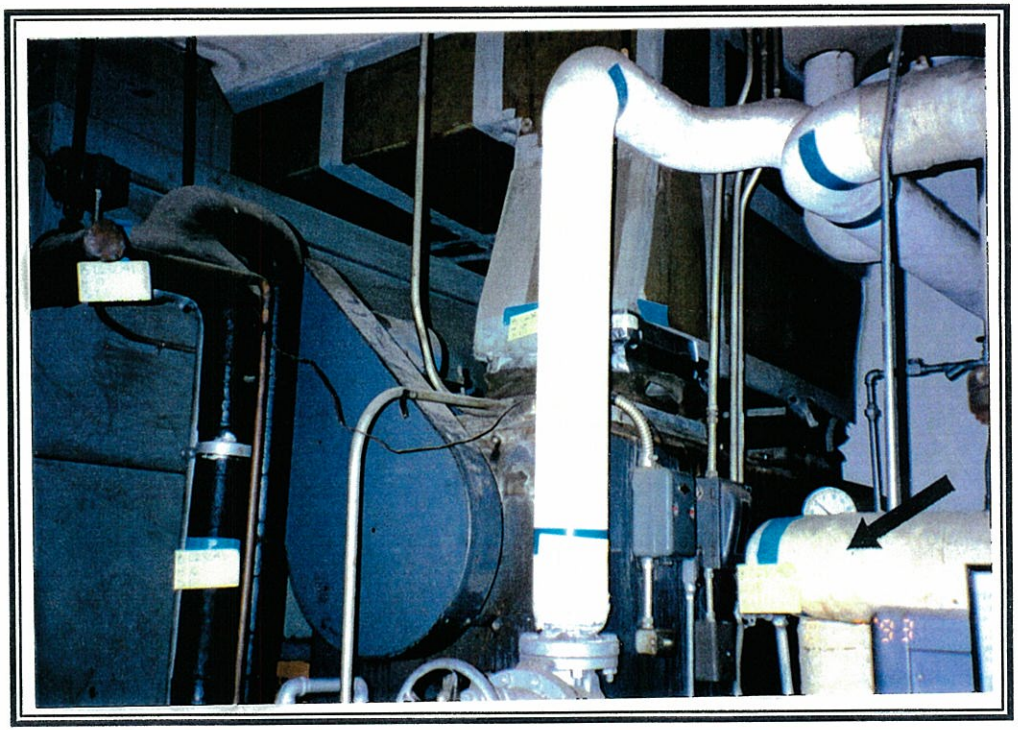

FIGURE 2
ASBESTOS-CONTAINING MATERIAL AREA SUMMARY

Date Printed 4/22/94

Building Name: District Laboratory

Building No.: 028046

Material Area No.: 16

Material Description: Pipe Insulation, Straight

Quantity Est.: 50 Lineal Feet

Samples Obtained / Analyzed : 2 / 1

Assessment Score : 16

Recommended Action : Operations and Maintenance Program

Material Removal Cost Category: T20
Pipe Insulation - Straight

Opinion of Removal Cost : $600

General Notes : Cork Insulation with Mastic is on piping connect to HVAC equipment piping.

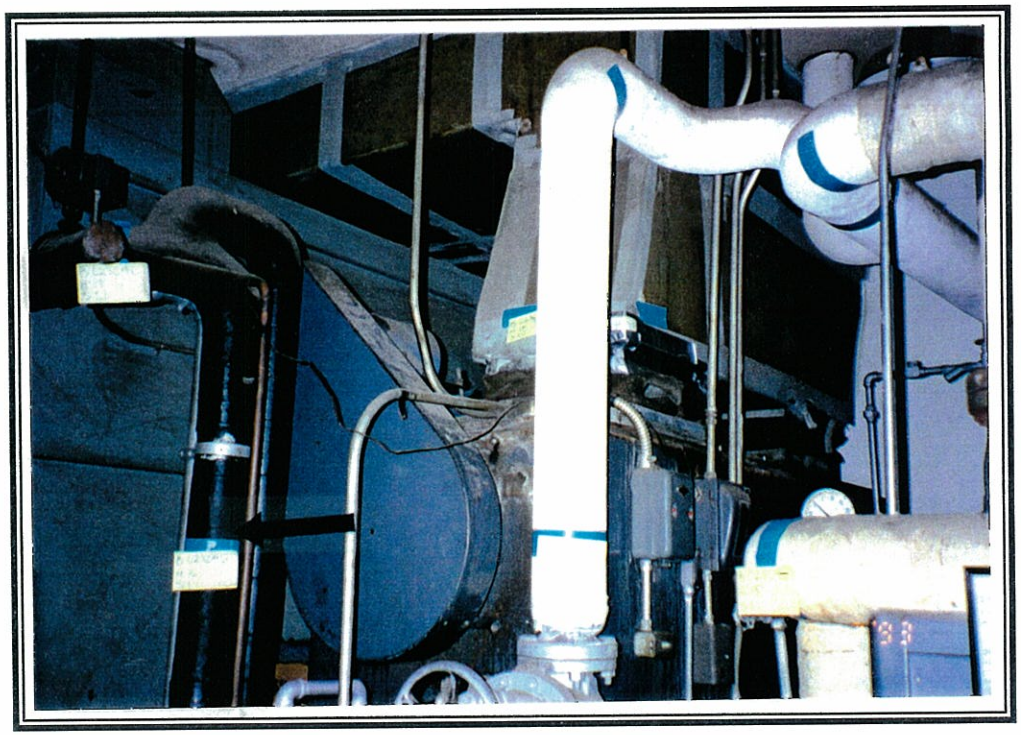

FIGURE 2
ASBESTOS-CONTAINING MATERIAL AREA SUMMARY

Date Printed 4/22/94

Building Name: District Laboratory

Building No.: 028046

Material Area No.: 17

Material Description: Pipe Insulation, Fitting

Quantity Est.: 20 Each

Samples Obtained / Analyzed : 2 / 2

Assessment Score : 16

Recommended Action : Operations and Maintenance Program

Material Removal Cost Category: T16
Pipe Insulation - Fittings

Opinion of Removal Cost : $700

General Notes : Cork Insulation with Mastic is on piping connect to HVAC equipment piping.

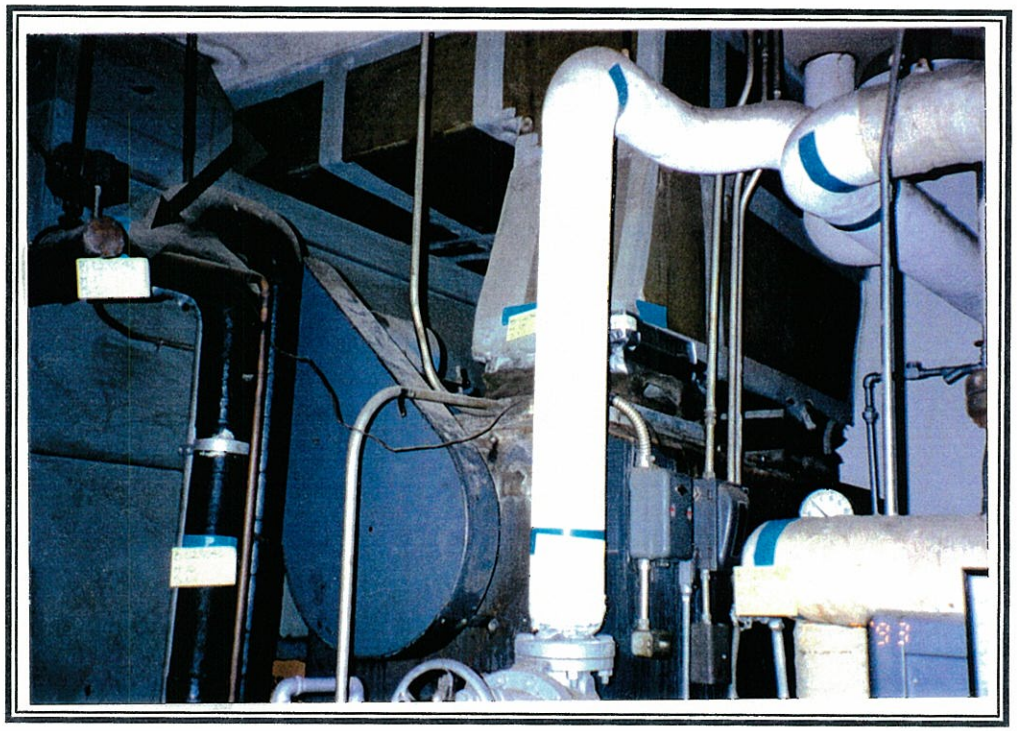

FIGURE 2
ASBESTOS-CONTAINING MATERIAL AREA SUMMARY

Date Printed 4/22/94

Building Name: District Laboratory

Building No.: 028046

Material Area No.: 18

Material Description: Air Duct Insulation Seam Tape and Mastic

Quantity Est.: 175 Lineal Feet

Samples Obtained / Analyzed : 2 / 2

Assessment Score : 10

Recommended Action : Operations and Maintenance Program

Material Removal Cost Category: T28
Air Duct Insulation Seam Tape/Mastic

Opinion of Removal Cost : $350

General Notes : Cork Insulation with Mastic is on piping connect to HVAC equipment piping.

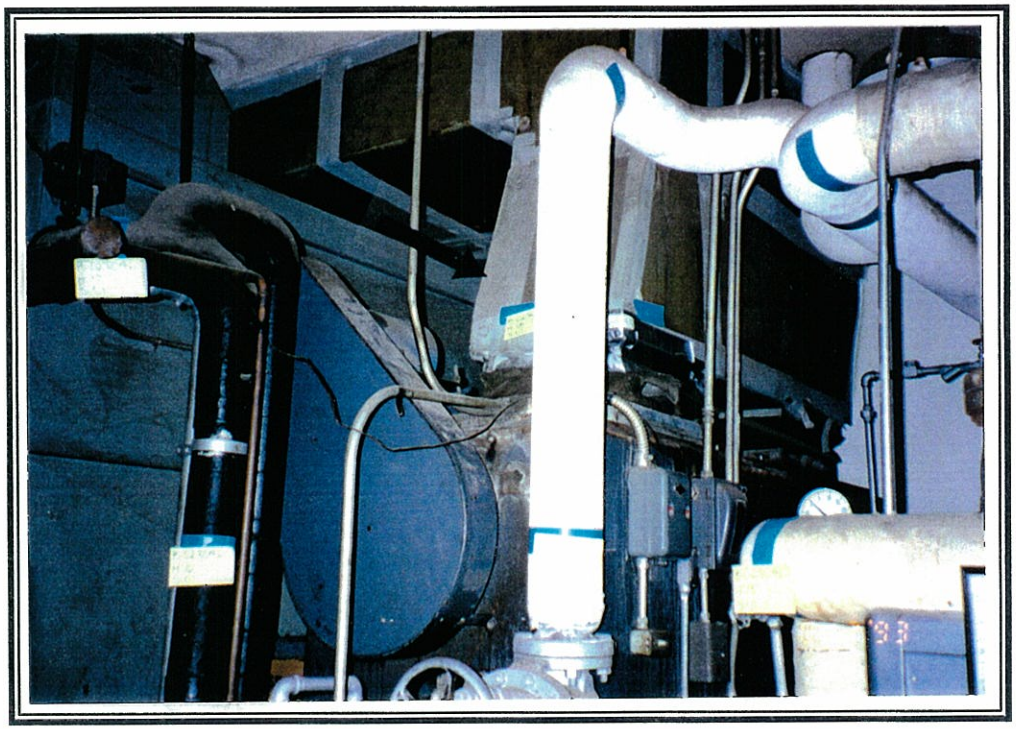

TABLE 5
SUMMARY OF ASBESTOS-CONTAINING MATERIALS
PROPERTY 029523

Date Printed 4/23/94

BUILDING NO.	BUILDING NAME	MATERIAL AREA	MATERIAL DESCRIPTION	QUANTITY ESTIMATE	ASSESSMENT SCORE	RECOMMENDED ACTION	REMOVAL COST
02800A	Lumber Storage	01	Cementitious Panels	600 SF	0	Operations and Maintenance Program	$1,200
028044	District Office Administrative Building	01	Floor Tile with Mastic, 9"x9", Off-Brown	300 SF	0	Operations and Maintenance Program	$750
028044	District Office Administrative Building	02	Floor Tile with Mastic, 9"x9", Green	720 SF	0	Operations and Maintenance Program	$1,800
028044	District Office Administrative Building	09	Sink Acoustical Coating	2 Ea	0	Operations and Maintenance Program	$300
028044	District Office Administrative Building	10	Light Fixture Insulation	2 Ea	4	Operations and Maintenance Program	$300
028044	District Office Administrative Building	12	Air Duct Insulation Seam Tape/Mastic	700 LF	60	Remove	$1,400
028044	District Office Administrative Building	16	Pipe Insulation with Lagging, Straight	500 LF	20	Repair / Operations and Maintenance Program	$6,000
028044	District Office Administrative Building	17	Pipe Insulation with Lagging, Fitting	50 Ea	20	Repair / Operations and Maintenance Program	$1,750
028044	District Office Administrative Building	27	Cementitious Building Panels	1,250 SF	0	Operations and Maintenance Program	$2,500
028044	District Office Administrative Building	28	Floor Tile with Mastic, 12"x12", Brown	3,200 SF	0	Operations and Maintenance Program	$8,000
028044	District Office Administrative Building	37	Roof Mastic	21,500 SF	0	Operations and Maintenance Program	$53,750
028044	District Office Administrative Building	38	Floor Tile with Mastic, 12"x12", Off-White	375 SF	0	Operations and Maintenance Program	$938
028045	Engineering Building	03	Floor Tile with Mastic, 9"x9", Green	8,280 SF	20	Repair / Operations and Maintenance Program	$20,700
028045	Engineering Building	04	Floor Tile with Mastic, 9"x9", Beige	4,300 SF	0	Operations and Maintenance Program	$10,750
028045	Engineering Building	10	Door and Window Frame Sealant	1,500 LF	16	Operations and Maintenance Program	$3,750
028045	Engineering Building	11	Air Duct Insulation Seam Tape and Mastic	50 LF	16	Operations and Maintenance Program	$300
028045	Engineering Building	12	Pipe Insulation with Mastic, Straight	1,600 LF	0	Operations and Maintenance Program	$19,200
028045	Engineering Building	14	Pipe Insulation with Mastic, Straight	1,700 LF	10	Operations and Maintenance Program	$20,400
028045	Engineering Building	15	Pipe Insulation with Mastic, Fitting	240 Ea	10	Operations and Maintenance Program	$8,400

TABLE 5
SUMMARY OF ASBESTOS-CONTAINING MATERIALS
PROPERTY 029523

Date Printed 4/23/94

BUILDING NO.	BUILDING NAME	MATERIAL AREA	MATERIAL DESCRIPTION	QUANTITY ESTIMATE	ASSESSMENT SCORE	RECOMMENDED ACTION	REMOVAL COST
028045	Engineering Building	16	Ceiling Texture, Spray-Applied	11,000 SF	22	Repair / Operations and Maintenance Program	$143,000
028045	Engineering Building	18	Pipe Insulation with Lagging/Mastic, Straight	100 LF	14	Operations and Maintenance Program	$1,200
028045	Engineering Building	19	Pipe Insulation with Lagging/Mastic, Fitting	150 Ea	14	Operations and Maintenance Program	$5,250
028045	Engineering Building	20	Boiler Tank Insulation	200 SF	16	Operations and Maintenance Program	$3,000
028046	District Laboratory	06	Sink Acoustical Coating	6 Ea	0	Operations and Maintenance Program	$300
028046	District Laboratory	11	Ceiling Texture, Spray-Applied	4,400 SF	16	Operations and Maintenance Program	$57,200
028046	District Laboratory	14	Pipe Insulation, Straight	100 LF	16	Operations and Maintenance Program	$1,200
028046	District Laboratory	15	Pipe Insulation, Fitting	50 Ea	16	Operations and Maintenance Program	$1,750
028046	District Laboratory	16	Pipe Insulation, Straight	50 LF	16	Operations and Maintenance Program	$600
028046	District Laboratory	17	Pipe Insulation, Fitting	20 Ea	16	Operations and Maintenance Program	$700
028046	District Laboratory	18	Air Duct Insulation Seam Tape and Mastic	175 LF	10	Operations and Maintenance Program	$350
028049	District Warehouse and Shop	01	Cementitious Panels	16,900 SF	0	Operations and Maintenance Program	$33,800
028049	District Warehouse and Shop	03	Window and Door Frame Sealant	2,000 LF	0	Operations and Maintenance Program	$5,000
028049	District Warehouse and Shop	04	Roof Mastic	33,000 SF	0	Operations and Maintenance Program	$82,500
028049	District Warehouse and Shop	05	Floor Tile with Mastic, 9"x9", Grey	1,200 SF	0	Operations and Maintenance Program	$3,000
028049	District Warehouse and Shop	09	Sink Accoustic Coating	1 Ea	4	Operations and Maintenance Program	$300
028049	District Warehouse and Shop	12	Ceiling Texture, Spray-Applied	1,800 SF	16	Operations and Maintenance Program	$23,400
028050	Storage and Shop	01	Cementitious Panels	2,500 SF	0	Operations and Maintenance Program	$5,000
028051	Shop Storage and Service Station	01	Cementitious Panels	7,000 SF	0	Operations and Maintenance Program	$14,000

TABLE 5
SUMMARY OF ASBESTOS-CONTAINING MATERIALS
PROPERTY 029523

Date Printed 4/23/94

BUILDING NO.	BUILDING NAME	MATERIAL AREA	MATERIAL DESCRIPTION	QUANTITY ESTIMATE	ASSESSMENT SCORE	RECOMMENDED ACTION	REMOVAL COST
028051	Shop Storage and Service Station	02	Window Frame Sealant	150 LF	0	Operations and Maintenance Program	$375
028051	Shop Storage and Service Station	03	Ceiling Texture, Spray-Applied	160 SF	16	Operations and Maintenance Program	$2,080
028051	Shop Storage and Service Station	08	Roof Mastic	13,700 SF	0	Operations and Maintenance Program	$34,250
028051	Shop Storage and Service Station	13	Floor Tile with Mastic, 9"x9", Grey and Brown	550 SF	16	Operations and Maintenance Program	$1,375
028051	Shop Storage and Service Station	15	Ceiling Texture, Spray-Applied	550 SF	16	Operations and Maintenance Program	$7,150
028051	Shop Storage and Service Station	24	Boiler Insulation	25 SF	16	Operations and Maintenance Program	$375
028055	Office and Storage	01	Floor Tile with Mastic, 9"x9", Brown	1,500 SF	0	Operations and Maintenance Program	$3,750
028055	Office and Storage	10	Ceiling Texture, Spray-Applied	1,500 SF	16	Operations and Maintenance Program	$19,500
028055	Office and Storage	12	Pipe Insulation, Straight	150 LF	16	Operations and Maintenance Program	$1,800
028055	Office and Storage	13	Pipe Insulation, Fittings	50 Ea	20	Repair / Operations and Maintenance Program	$1,750
028055	Office and Storage	14	Pipe Insulation, Straight	20 LF	18	Operations and Maintenance Program	$300
028057	Equipment Storage	01	Cementitious Building Panels	3,000 SF	0	Operations and Maintenance Program	$6,000
028058	Service Station	04	Pipe Insulation, Fitting	15 Ea	16	Operations and Maintenance Program	$525
028060	Office and Storage	01	Floor Tile with Mastic, 9"x9", Green	380 SF	0	Operations and Maintenance Program	$950
028060	Office and Storage	03	Cementitious Panels	4,500 SF	0	Operations and Maintenance Program	$9,000
028060	Office and Storage	05	Ceiling Texture, Spray-Applied	380 SF	16	Operations and Maintenance Program	$4,940
028076	District Construction Office	02	Floor Tile with Mastic, 12"x12", Off-White	6,500 SF	0	Operations and Maintenance Program	$16,250
028076	District Construction Office	11	Sink Acoustic Coating	1 Ea	4	Operations and Maintenance Program	$300
028076	District Construction Office	15	Pipe Insulation, Fittings	25 Ea	10	Operations and Maintenance Program	$875

TABLE 5
SUMMARY OF ASBESTOS-CONTAINING MATERIALS
PROPERTY 029523

Date Printed 4/23/94

BUILDING NO.	BUILDING NAME	MATERIAL AREA	MATERIAL DESCRIPTION	QUANTITY ESTIMATE	ASSESSMENT SCORE	RECOMMENDED ACTION	REMOVAL COST
028076	District Construction Office	17	Pipe Insulation, Fittings	100 Ea	14	Operations and Maintenance Program	$3,500
028076	District Construction Office	21	Roof Drain Pipe Insulation, Fittings	20 Ea	12	Operations and Maintenance Program	$700
028077	Storage	01	Cementitious Building Panels	675 SF	0	Operations and Maintenance Program	$1,350
028077	Storage	02	Door Frame Sealant	175 LF	0	Operations and Maintenance Program	$438
028077	Storage	03	Floor Tile with Mastic, 12"x12", Grey	1,400 SF	16	Operations and Maintenance Program	$3,500
028077	Storage	06	Wallboard with Texture	925 SF	0	Operations and Maintenance Program	$2,313
028079	Storage Building	01	Floor Tile with Mastic, 12"x12", Beige	2,400 SF	0	Operations and Maintenance Program	$6,000
028079	Storage Building	06	Air Duct Insulation Seam Tape and Mastic	200 LF	0	Operations and Maintenance Program	$400
028100	Traffic Safety Building	01	Sheet Floor Covering	30 SF	16	Operations and Maintenance Program	$300
028100	Traffic Safety Building	03	Sink Acoustical Coating	2 Ea	0	Operations and Maintenance Program	$300
028100	Traffic Safety Building	04	Roof Shingle	1,300 SF	0	Operations and Maintenance Program	$5,850

ATTACHMENT E
Prototypical Maintenance Facility Construction Documents
Standards Glen Rose and Mineral Wells
Maintenance Facilities

THIS PAGE LEFT BLANK INTENTIONALLY

INFORMATION AVAILABLE ONLY BY
INTERNET OR BY DISC

http://www.dot.state.tx.us/mnt/contract/rfp.htm

NORTH

LOCATION MAP
(NOT TO SCALE)
SH 107, 1/4 MILE East OF FM 1015,
EDCOUCH, TX
HIDALGO COUNTY, TEXAS.
PHAR DISTRICT

HIDALGO COUNTY, TEXAS

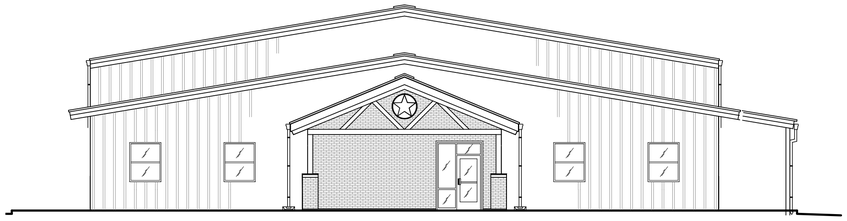

TXDOT SITE NUMBER:

219813

TXDOT BUILDING NUMBER:

21800

BUILDING SUMMARY:

OFFICE:	**3,600 S.F.**
SHOP/STORAGE:	**6,960 S.F.**
TRUCK WASH / EQUIP. ROOM:	**1,720 S.F.**
COVERED ENTRY PORCH:	**260 S.F.**
EQUIPMENT SHED:	**4,375 S.F.**
TOTAL SQ. FT. :	**16, 915 S.F.**

PARKING SUMMARY:

20 - 11' x 20' SPACES
2 - VAN ACCESSIBLE SPACES

22 - TOTAL SPACES PROVIDED

SITE SUMMARY:

TOTAL ACRES - 4.68 ACRES

BUILDING CODES:

International Building Code - 2006
National Electric Code - 2005
Uniform Plumbing Code - 2003
Uniform Mechanical Code - 2003
State Energy Code (ASHRAE Standard 90.1-2004)

FTE SUMMARY:

TOTAL FTE - 18

SCOPE OF WORK:

THIS PROJECT INCLUDES THE CONSTRUCTION OF A MAINTENANCE FACILITY THAT INCLUDES OFFICES, SHOP AND STORAGE, VEHICLE STORAGE, A TRUCK WASH BAY AND E□UIPMENT SHED. A FUEL STATION IS ALSO INCLUDED. SITE IMPROVEMENT WORK INCLUDES EROSION CONTROL, GRADING, SERVICE UTILITIES, ASPHALT AND CONCRETE DRIVES, PARKING LOTS, SECURITY FENCING AND LANDSCAPING ON A NEW TxDOT SITE.

Texas Department of Transportation
150 East Riverside Drive
Austin, Texas 78704
(512) 416-3048

Copyright 2007 © Texas Department of Transportation

Maintenance Division/Facilities Management
AREA ENGINEER AND MAINTENANCE FACILITY
Austin, Texas
Roel Bazan, RA - Project Manager - (512) 416-2357

EDCOUCH MAINTENANCE FACILITY

SH 107, 1/4 MILE East OF FM 1015,
EDCOUCH, TEXAS.
PHAR DISTRICT DISTRICT - 21

PROJECT NUMBER: CBC-4704-00-884 DETAIL NUMBER: 15-77-4704-00-884

INDEX OF DRAWINGS

COVERSHEET

GENERAL
G1.1 ABBREVIATIONS AND SYMBOLS
G1.2 TEXAS ACCESSIBILITY STANDARDS

CIVIL
C1.0 GENERAL NOTES
C1.1 GENERAL NOTES
C2.0 EXISTING CONDITIONS PLAN
C3.0 EROSION AND SEDIMENT CONTROL PLAN
C3.1 EROSION AND SEDIMENT CONTROL DETAILS
C3.2 EROSION AND SEDIMENT CONTROL DETAILS
C3.3 EROSION AND SEDIMENT CONTROL DETAILS
C3.4 EROSION AND SEDIMENT CONTROL DETAILS
C4.0 DEMOLITION PLAN
C5.0 SITE PLAN
C5.1 CIVIL DETAILS
C5.2 CIVIL DETAILS
C5.3 CIVIL DETAILS
C5.4 CIVIL DETAILS
C6.0 GRADING PLAN
C6.1 GRADING PLAN
C7.0 DIMENSIONAL CONTROL PLAN
C8.0 UTILITY PLAN
C8.1 UTILITY DETAILS
C8.2 UTILITY DETAILS
C8.3 UTILITY DETAILS

ARCHITECTURAL
A1.0 LANDSCAPE PLAN
A1.1 SITE PLAN
A1.2 SITE DETAILS
A1.3 GATE & FENCE DETAILS
A2.0 CODE COMPLIANCE SHEET
A2.1 FLOOR PLAN
A3.1 ROOF PLAN
A3.2 ROOF DETAILS
A4.1 REFLECTED CEILING PLAN
A5.1 EXTERIOR ELEVATIONS
A6.1 TOILETS & CABINETS–PLANS & ELEVATIONS
A6.2 MILLWORK DETAILS
A7.1 BUILDING SECTIONS
A7.2 BUILDING SECTIONS
A8.1 PARTITION TYPES
A8.2 WALL SECTIONS
A8.3 WALL SECTIONS
A8.4 WALL SECTIONS
A8.5 WALL SECTIONS
A8.6 WALL SECTIONS
A8.7 WALL SECTIONS
A8.8 WALL SECTIONS
A9.1 FINISH/DOOR SCHEDULE–DOOR/WINDOW TYPES
A9.2 DOOR DETAILS
A9.3 WINDOW AND DOOR DETAILS
A9.4 PLAN DETAILS
A9.5 STAR DETAILS
A10.1 EQUIPMENT SHED

STRUCTURAL
S1.1 STRUCTURAL NOTES & ABBREVIATIONS
S1.2 STRUCTURAL NOTES
S2.1 FOUNDATION PLAN
S2.2 FUEL ISLAND: FOUNDATION PLAN & DETAILS
S2.3 ROOF FRAMING PLAN
S3.1 FOUNDATION DETAILS
S3.2 FOUNDATION DETAILS
S3.3 TYPICAL FOUNDATION DETAILS
S4.1 PRE–ENGINEERED FRAME ELEVATIONS
S5.1 EQUIPMENT SHED: FOUNDATION & FRAMING PLANS, DETAILS

MECHANICAL
M2.0 MECHANICAL GENERAL NOTES, KEY NOTES AND SYMBOLS
M2.1 MECHANICAL PLAN
M4.1 MECHANICAL SCHEDULES – 1
M4.2 MECHANICAL SCHEDULES – 2
M5.1 MECHANICAL DETAILS

ELECTRICAL
E2.0 ELECTRICAL GENERAL NOTES, KEY NOTES AND SYMBOLS
E2.1 LIGHTING PLAN
E2.2 POWER PLAN
E2.3 GAS DETECTION PLAN
E2.4 LIGHTING AND POWER PLAN – EQUIPMENT SHED
E3.1 ELECTRICAL RISER DIAGRAM & LIGHTING SCHEDULE
E4.1 ELECTRICAL PANEL BOARD SCHEDULES
E4.2 ELECTRICAL PANEL BOARD SCHEDULES – 2
E5.1 ELECTRICAL DETAILS
E5.2 VOICE/DATA DETAILS
E2.20 FUEL STATION PLAN – SCHEDULE AND ELEVATIONS
E2.21 FUEL STATION PLAN – POWER & SPECIAL SYSTEMS AND SCHEDULES

PE1.1 PLUMBING AND ELECTRICAL SITE PLAN

PLUMBING
P1.1 SCHEDULES AND NOTES
P2.1 PLUMBING PLAN–OFFICE BUILDING
P2.2 PLUMBING PLAN–OFFICE BUILDING, NOTES & SCHEDULES
P2.3 PLUMBING TRUCK WASH BAY
P3.1 RISER DIAGRAMS, SANITARY SEWER & DOMESTIC WATER
P3.2 PLUMBING RISER DIAGRAM – DOMESTIC WATER
P4.1 PLUMBING SCHEDULES
P5.1 PLUMBING DETAILS
P5.2 PLUMBING DETAILS
P5.3 PLUMBING DETAILS

SCHEDULE OF ABBREVIATIONS

A

A	AMPERE
AB	ANCHOR BOLT
ABV	ABOVE
A/C	AIR CONDITIONING
ACC	ACCESS
ACI	AMERICAN CONCRETE INSTITUTE
ACOUST	ACOUSTICAL
ACU	AIR CONDITIONING UNIT
ADA	AMERICANS WITH DISABILITIES ACT
ADD'L	ADDITIONAL
ADD	ADDITION OR ADDITIVE
ADH	ADHESIVE
ADJ	ADJACENT OR ADJUSTABLE
AFF	ABOVE FINISH FLOOR
AGG	AGGREGATE
AHJ	AUTHORITY HAVING JURISDICTION
AISC	AMERICAN INSTITUTE OF STEEL CONSTRUCTION
ALT	ALTERNATE
ALUM	ALUMINUM
ANC	ANCHOR
APA	AMERICAN PLYWOOD ASSOCIATION
APPROX	APPROXIMATELY
ARCH	ARCHITECT(URAL)
ASM	SMACNA ARCHITECTURAL SHEET METAL MANUAL
ASPH	ASPHALT
ASTM	AMERICAN SOCIETY FOR TESTING OF MATERIALS
ATC	ACOUSTICAL TILE CEILING
AUTO	AUTOMATIC
AUX	AUXILIARY

B

B/F	BELOW FLOOR
BD	BOARD
BEL	BELOW
BET	BETWEEN
BLDG	BUILDING
BLK	BLOCK
BLKG	BLOCKING
BM	BENCH MARK OR BEAM
BOT	BOTTOM
BRG	BEARING
BRZ	BRONZE
BUR	BUILT-UP ROOF(ING)

C

C	CHANNEL OR CONDUIT
CAB	CABINET
CB	CATCH BASIN
C/C	CENTER TO CENTER
CCT	CIRCUIT
CER	CERAMIC
CFM	CUBIC FEET PER MINUTE
CG	CORNER GUARD
CHT	CEILING HEIGHT
CI	CAST IRON
CIP	CAST IRON PIPE OR CAST IN PLACE
CISP	CAST IRON SOIL PIPE
CJ	CONTROL JOINT
CL	CENTERLINE
CLG	CEILING
CLO	CLOSET
CLR	CLEAR
CMU	CONCRETE MASONRY UNIT
CO	CLEANOUT
COMP	COMPOSITION
COMPR	COMPRESSIBLE
CONC	CONCRETE
CONF	CONFER OR CONFERENCE
CONN	CONNECTION
CONST	CONSTRUCTION
CONT	CONTINUOUS
CONTR	CONTRACTOR
CPT	CARPET(ED)
CR	COLD ROLLED
CRC	COLD ROLLED CHANNEL
CSK	COUNTERSINK (SUNK)
CSMT	CASEMENT
CT	CERAMIC TILE
CTR	CENTER
CW	COLD WATER

D

D	DEPTH OR DRAIN
DBL	DOUBLE
DC	DIRECT CURRENT
DCO	DOUBLE CLEANOUT
DEMO	DEMOLITION
DET	DETAIL
DF	DRINKING FOUNTAIN
DHW	DOMESTIC HOT WATER
DI	DUCTILE IRON
DIA	DIAMETER
DIAG	DIAGONAL
DN	DOWN
DR	DOOR OR DRIVE
DS	DOWNSPOUT
DTL	DETAIL
DWC	DRYWALL CHANNEL
DWG	DRAWING
DWL	DOWEL

E

E	EAST
EA	EACH
ECJ	EDGE CONTROL JOINT
EEW	EMERGENCY EYE WASH
EF	EACH FACE
EIFS	EXTERIOR INSULATION AND FINISH SYSTEM
EJ	EXPANSION JOINT
EL	ELEVATOR
ELEC	ELECTRIC(AL)
ELEV	ELEVATION
EMER	EMERGENCY
EMH	ELECTRICAL MANHOLE
EQ	EQUAL
EQUIP	EQUIPMENT
ESE	EMERGENCY EYE SHOWER
EW	EACH WAY
EW-EF	EACH WAY – EACH FACE
EWC	ELECTRIC WATER COOLER
EWH	ELECTRIC WATER HEATER
EXH	EXHAUST
EXIST	EXISTING
EXP	EXPOSED
EXP JT	EXPANSION JOINT
EXT	EXTERIOR
EXTEN	EXTENSION

F

F	FIRE PIPE
FA	FIRE ALARM
FCO	FLOOR CLEANOUT
FD	FLOOR DRAIN
FDC	FIRE DEPT. CONNECTION
FDN	FOUNDATION
FE	FIRE EXTINGUISHER
FEC	FIRE EXTINGUISHER CABINET
FF	FINISH FLOOR
FFE	FINISH FLOOR EXISTING
FH	FIRE HYDRANT
FHC	FIRE HOSE CABINET
FIN	FINISH
FIX	FIXTURE
FL	FLOW LINE
FLR	FLOOR
FPRF	FIREPROOFING
FR	FIRE RATED
FRMG	FRAMING
FRP	FIBERGLASS REINFORCED PLASTIC
FS	FLOOR SINK
FT	FEET
FTG	FOOTING
FVC	FIRE VALVE CABINET

G

G	GRILLE OR GAS
GA	GAUGE (GAGE)
GALV	GALVANIZED
GB	GRAB BAR OR GRADE BEAM
GCO	GRADE CLEANOUT
GI	GALVANIZED IRON OR GRATE INLET
GL	GLASS
GND	GROUND
GR	GRADE
GSU	GLAZED STRUCTURAL UNIT
GWB	GYPSUM WALLBOARD
GYP	GYPSUM

H

HB	HOSE BIBB
HC	HANDICAP
HDWE	HARDWARE
HDWD	HARDWOOD
HM	HOLLOW METAL
HND	HAND
HP	HORSE POWER
HORIZ	HORIZONTAL
HR	HOUR
HS	HIGH STRENGTH OR HEADED STUDS
HT	HEIGHT
HTR	HEATER
HVAC	HEATING/VENTILATING/ AIR CONDITIONING
HW	HOT WATER
HWTM	HOT WATER TEMPER- ATURE MAINTENANCE

I

ID	INSIDE DIAMETER
IF	INSIDE FACE
IN	INCH
INFO	INFORMATION
INSUL	INSULATION
INT	INTERIOR
INTER	INTERMEDIATE

J

J	JUNCTION
JAN	JANITOR
JB	JUNCTION BOX
JST	JOIST
JT	JOINT

K

KCJ	KEYED CONSTRUCTION JOINT
KIT	KITCHEN
KV	KILOVOLT
KVA	KILOVOLT-AMPERE
KW	KILOWATT
KWH	KILOWATT-HOUR

L

L	LENGTH
LAM	LAMINATE
LAV	LAVATORY
LF	LINEAR FEET
LH	LEFT HAND
LL	LIVE LOAD
LLH	LONG LEG HORIZONTAL
LLV	LONG LEG VERTICAL
LOC	LOCATE OR LOCATION
LONG	LONGITUDINAL
LP	LOW POINT
LT	LIGHT(S)
LTG	LIGHTING
LT WT	LIGHT WEIGHT
LVL	LEVEL

M

M	MOTOR
MAINT	MAINTENANCE
MANUF	MANUFACTURER
MAS	MASONRY
MAT'L	MATERIAL
MAX	MAXIMUM
M.B.M.	METAL BUILDING MANUFACTURER
MBR	MEMBER
MDP	MAIN DISTRIBUTION PANEL
MECH	MECHANICAL
MEP	MECHANICAL/ELECTRICAL/ PLUMBING
MFR	MANUFACTURER
MG	MIRROR GLASS
MH	MANHOLE
MIN	MINIMUM
MJA	SEALANT JOINT
	SHAPE DETAIL
MO	MASONRY OPENING
MPH	MILES PER HOUR
MTG	MOUNTING OR MOUNTED
MTL	METAL

N

N	NORTH
NFWH	NON-FREEZE WALL HYDRANT
NFYH	NON-FREEZE YARD HYDRANT
NIC	NOT IN CONTRACT
NO	NUMBER
NOM	NOMINAL
NTS	NOT TO SCALE

O

OA	OUTSIDE AIR
OC	ON CENTER
OCEW	ON CENTER –EACH WAY
OD	OUTSIDE DIAMETER
OF	OUTSIDE FACE
OFD	OVERFLOW DRAIN
OH	OVERHEAD
OPNG	OPENING
OPP	OPPOSITE
OSL	OUTSIDE LEG
OZ	OUNCES

P

PART	PARTITION
PL	PROPERTY LINE OR PLATE
PLAM	PLASTIC LAMINATE
PLAS	PLASTER
PLF	POUNDS PER LINEAR FOOT
PLYWD	PLYWOOD
PNL	PANEL
PR	PAIR
PROV	PROVIDE
PSF	POUNDS PER SQUARE FOOT
PSI	POUNDS PER SQUARE INCH
PSIG	POUNDS PER SQUARE INCH GAGE
PT	POINT
PTD	PAPER TOWEL DISPENSER OR PAINTED
PVC	POLYVINYL CHLORIDE
PVMT	PAVEMENT

Q

QT	QUARRY TILE
QTY	QUANTITY

R

R	RISER OR REGISTER
RA	RETURN AIR
RAD	RADIUS OR RETURN AIR DUCT
RCP	REFLECTED CEILING PLAN
RD	ROOF DRAIN
RE	REFER TO
REF	REFERENCE
REFL	REFLECTED
REINF	REINFORCING (REINFORCED)
REM	REMARK OR REMOVE
REQ'D	REQUIRED
RET	RETAINING
REV	REVERSE OR REVISED
RH	RIGHT HAND
RM	ROOM
RO	ROUGH OPENING
RPM	REVOLUTIONS PER MINUTE
RPZ	REDUCED PRESSURE PRINCIPAL BACKFLOW PREVENTER
RTU	ROOF TOP UNIT

S

S	SOUTH
SA	SUPPLY AIR
SAN	SANITARY
SAT	SUSPENDED ACOUSTICAL TILE
SC	SCALE
SCH	SCHEDULE
SCW	SOLID CORE WOOD
SD	SMOKE DAMPER OR STORM DRAIN
SECT	SECTION
SF	SUPPLY FAN OR SQUARE FEET
SGFT	STRUCTURAL GLAZED FACING TILE
SH	SPRINKLER HEAD
SHT	SHEET
SIM	SIMILAR
SJ	SAWED JOINT
SM	SPRINKLER MAIN
SMACNA	SHEET METAL AND AIR CONDITIONING CONTRACTORS NATIONAL ASSOCIATION
SPC	SPACE
SPEC	SPECIFICATION
SPEC'D	SPECIFIED
SQ	SQUARE
SS	SERVICE SINK OR SANITARY SEWER
SSM	SOLID SURFACE MATERIAL

S

SHT	SHEET
SIM	SIMILAR
SJ	SAWED JOINT
SM	SPRINKLER MAIN
SMACNA	SHEET METAL AND AIR CONDITIONING CONTRACTORS NATIONAL ASSOCIATION
SPC	SPACE
SPEC	SPECIFICATION
SPEC'D	SPECIFIED
SQ	SQUARE
SSMH	SANITARY SEWER MANHOLE
SSTL	STAINLESS STEEL
STA	STATION
STD	STANDARD
STIFF	STIFFENER
STIR	STIRRUP
STL	STEEL
STOR	STORAGE
STR	STRUCTURAL
SUPT	SUPPORT
SUSP	SUSPENDED
SV	SHEET VINYL
SVC	SERVICE
SW	SWITCH
SYM	SYMMETRICAL

T

T	THICKNESS OR TREAD
TAS	TEXAS ACCESSIBILITY STANDARDS
T&B	TOP AND BOTTOM
TC	TOP OF CURB
TEL	TELEPHONE
TEMP	TEMPERATURE OR TEMPORARY
TH	THRESHOLD
THRU	THROUGH
THR'D	THREADED
TLT	TOILET
TOC	TOP OF CONCRETE
TOS	TOP OF STEEL
TOT	TOTAL
TOW	TOP OF WALL
TP	TOILET PARTITION
TRANS	TRANSVERSE OR TRANSITION
TS	TUBE STEEL
T-STAT	THERMOSTAT
TTD	TOILET TISSUE DISPENSER
TYP	TYPICAL

U

U/G	UNDERGROUND
UL	UNDERWRITERS LABORATORY INC.
UNO	UNLESS OTHERWISE NOTED
UR	URINAL

V

V	VENT OR VOLT
VAC	VACUUM
VB	VINYL BASE
VCT	VINYL COMPOSITION TILE
VERT	VERTICAL
VEST	VESTIBULE
VF	VENTILATION FAN
VIF	VERIFY IN FIELD
VOL	VOLUME
VTR	VENT THROUGH ROOF
VWC	VINYL WALL COVERING
VWF	VINYL WALL FABRIC

W

W	WIDTH, WASTE OR WEST
W/	WITH
W/O	WITHOUT
WC	WATER CLOSET
WD	WOOD
WDW	WINDOW
WH	WATER HEATER OR WALL HYDRANT
WP	WEATHERPROOF OR WORKING POINT
WPFG	WATERPROOFING
WPL	WATERPROOF LOUVER
WS	WATER STOP
WSCT	WAINSCOT
WT	WEIGHT
WV	WATER VALVE
WWF	WELDED WIRE FABRIC
WWM	WELDED WIRE MESH

GENERAL SYMBOLS

- 24.0 NEW CONTOUR
- 20.1 EXIST. SPOT ELEV.
- 24.0 EXIST. CONTOUR
- LEVEL LINE
- D5 DEMOLITION NOTE SYMBOL
- C8 NEW CONSTRUCTION SYMBOL
- A8.4 PARTITION TYPE KEY
- A8.4 PARTITION TYPE KEY
- TA9 TOILET ACCESSORIES KEY NOTE
- X COLUMN GRID LOCATION
- RECEPTION 101 ROOM NAME / NUMBER
- WHEELCHAIR TURNING RADIUS
- 1/A1.1 PLAN / DETAIL ENLARGED
- 1 A1.0 WALL SECTION
- 2 A2.0 BUILDING SECTION
- 1/A1.1 SECTION DETAIL
- 1/A1.1 INTERIOR ELEV. KEY
- 115 DOOR TYPE
- B WINDOW TYPE
- 1 XXXX DRAWING TITLE / SCALE
- 1 A1.0 EXTERIOR ELEVATION
- NORTH NORTH NORTH ARROWS
- FEC SEMI-RECESSED FIRE EXT. CABINET
- FE FIRE EXTINGUISHER ON BRACKET
- X LOUVER TYPE

ARCHITECTURAL SYMBOLS

SECTION

- CONCRETE
- PRECAST CONCRETE
- CMU
- BRICK
- CAST/CUT STONE
- NATURAL STONE
- STEEL
- ALUMINUM
- BRASS/BRONZE
- FINISHED WOOD
- METAL LATH & PLASTER
- CERAMIC/QUARRY TILE
- GLASS/MIRROR
- GRADE/EARTH
- CARPET
- GRAVEL
- SAND
- CONTINOUS WOOD BLOCKING
- DISCONTINUOUS WOOD SHIM
- PLYWOOD
- SPRAYED FIREPROOFING
- BATT/BLANKET INSULATION
- RIGID INSULATION
- ROOF DECK INSULATION
- GYPSUM SHEATHING
- GYPSUM WALLBOARD
- BACKER ROD & SEALANT
- JOINT FILLER
- ACOUSTICAL CEILING
- PLASTIC LAMINATE
- EXTERIOR INSULATED FINISH SYSTEM (E.I.F.S.)

ELEVATION

- CONCRETE
- BRICK
- BRICK
- BRICK
- GLASS
- CONCRETE
- BRICK
- BRICK
- WOOD
- SAND
- SAND

Texas Department of Transportation
125 E. 11th Street
Austin, Texas 78701-2483
(512) 416-3048
Copyright © 2005 Texas Department of Transportation

THIS DOCUMENT IS RELEASED FOR THE PURPOSE OF INFORMATION ONLY
NOT FOR REGULATORY APPROVAL, PERMITTING, OR CONSTRUCTION.

EDCOUCH
MAINTENANCE FACILITY
HIDALGO COUNTY, EDCOUCH TEXAS
PHARR DISTRICT

Revisions

Drawn by:
-
Project No.

Date
05-26-2009
Sheet No.

G1.1
of 2 sheets

ABBREVIATIONS / SYMBOLS

NOTE: THIS DRAWING WAS CREATED FOR PRODUCTION ON 22" x 34" SHEET SIZE. DO NOT SCALE PRINTS.

CADFILE: ... Plotted: Fri, Aug. 07, 2009 @ 11:19 AM By: MBAZAN

MOUNTING HEIGHTS

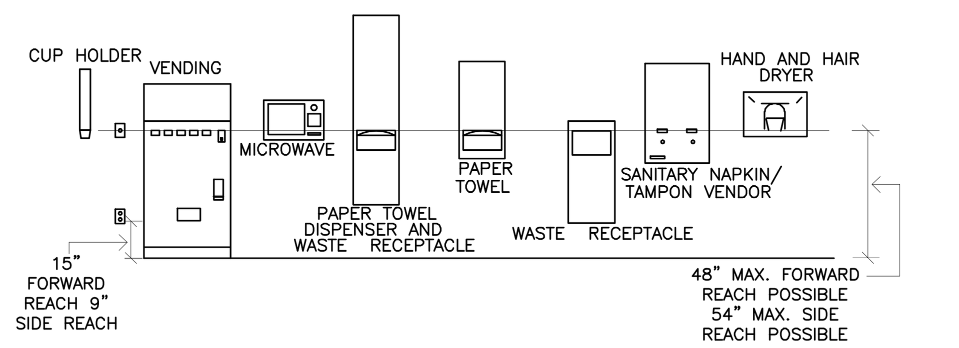

DOOR SIGNAGE MOUNTING HEIGHTS AND LOCATION

CHARACTER PROPORTIONS

LETTERS AND NUMBERS OF SIGNS SHALL HAVE A WIDTH–TO–HEIGHT RATIO OF BETWEEN 3:5 AND 1:1, AND STROKE/WIDTH–TO– HEIGHT RATIO BETWEEN 1:5 AND 1:10

CHARACTER HEIGHT

CHARACTERS AND NUMBERS ON SIGNS SHALL BE SIZED ACCORDING TO THE VIEWING DISTANCE FROM WHICH THEY ARE TO BE READ. THE MINIMUM HEIGHT IS MEASURED USING AN UPPER CASE "X". LOWER CASE CHARACTERS ARE PERMITTED. OVERHEAD SIGNS SHALL HAVE MINIMUM CLEARANCE OF 80" UNDER LOWEST POINT OF THE SIGN. MINIMUM CHARACTER **HEIGHT SHALL BE 3".**

RAISED AND BRAILLE CHARACTER

LETTERS AND NUMERALS SHALL BE RAISED 1/32" MINIMUM UPPER CASE "SANSERIF" OR "SIMPLE SERIF" TYPE AND SHALL BE ACCOMPANIED WITH GRADE 2 BRAILLE. RAISED CHARACTERS SHALL BE AT LEAST 5/8" HIGH, BUT NO HIGHER THAN 2". PICTOGRAMS SHALL BE ACCOMPANIED BY THE EQUIVALENT VERBAL DESCRIPTION PLACED DIRECTLY BELOW PICTOGRAMS. THE BORDER DIMENSION OF PICTOGRAM SHALL BE 6" MIN. IN HEIGHT.

FINISH AND CONTRAST

THE CHARACTERS AND BACKGROUND OF THE SIGNS SHALL BE EGGSHELL, MATTE, OR NON–GLARE FINISH. CHARACTERS AND SYMBOLS SHALL CONTRAST WITH THEIR BACKGROUND.(LIGHT CHARACTERS ON DARK BACKGROUND OR VICE–VERSA)

MOUNTING LOCATIONS AND HEIGHT

SIGNS SHALL BE INSTALLED ON THE WALL ADJACENT TO THE LATCH SIDE OF THE DOOR. IF NO SPACE IS LEFT TO THE LATCH SIDE OF THE DOOR, SUCH AS DOUBLE–LEAF DOORS, SIGN SHALL BE PLACED ON THE NEAREST ADJACENT WALL. MOUNTING HEIGHT SHALL BE 60" ABOVE FINISH FLOOR TO THE CENTERLINE OF THE SIGN. MOUNTING LOCATION SHALL BE SUCH THAT A PERSON MAY APPROACH WITHIN 3" OF SIGNAGE WITHOUT ENCOUNTERING PROTRUDING OBJECT OR STANDING WITHIN THE SWING OF A DOOR.

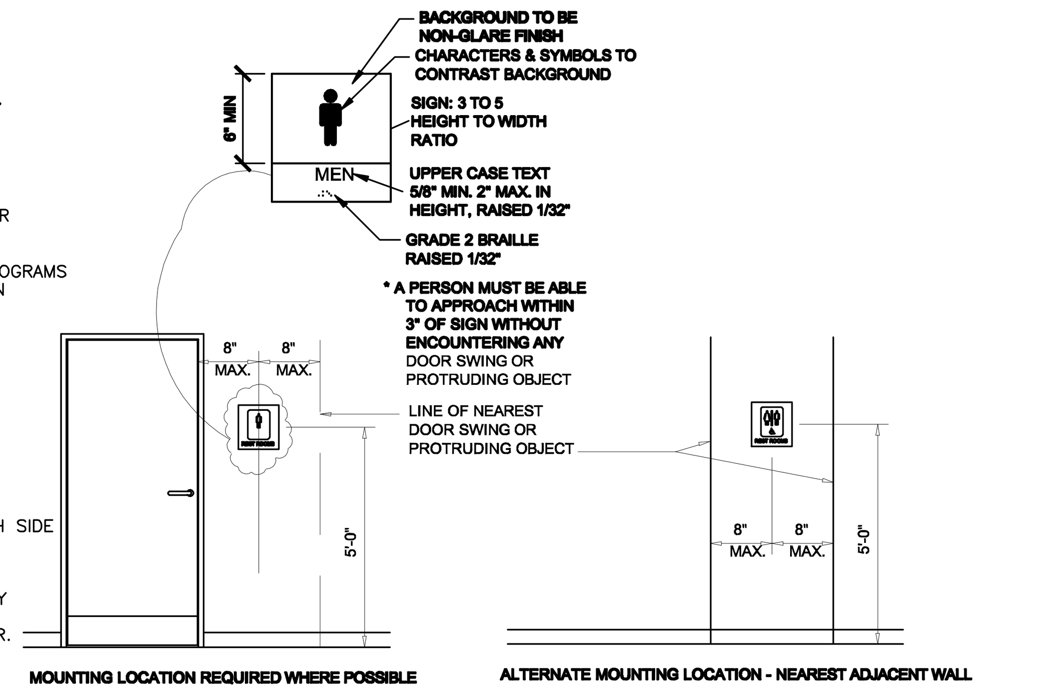

ACCESSIBLE ROUTE

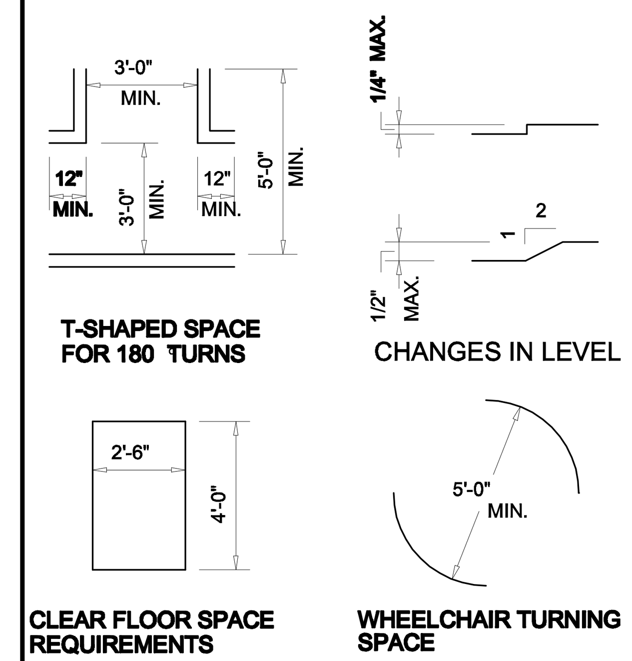

DRINKING FOUNTAINS

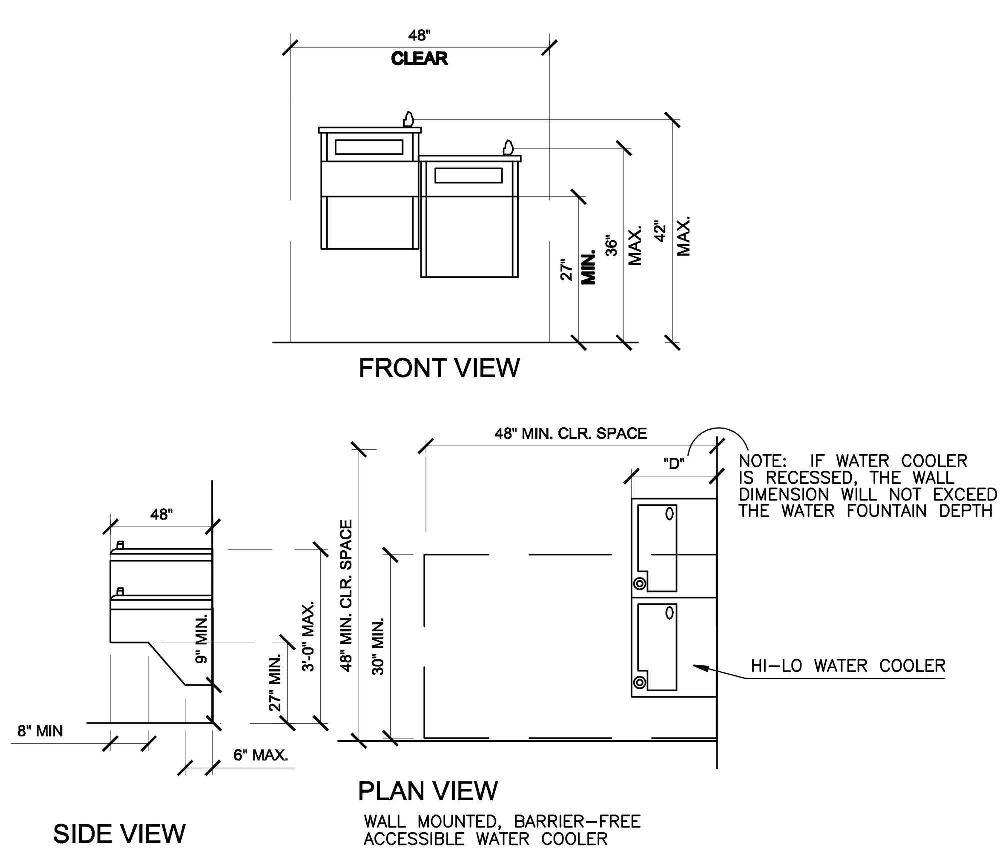

NOTES: 1. SPOUT SHALL BE WITHIN 3" FROM FRONT OF UNIT, FLOW OF WATER SHALL BE MIN. 4" HIGH AND PARALLEL TO FRONT OF UNIT.
2. CONTROLS SHALL BE FRONT-MOUNTED OR SIDE-MOUNTED NEAR THE FRONT. CONTROLS SHALL BE ABLE TO BE OPERATED WITH ONE HAND AND WITH MAX. FORCE OF 5 LBS.

REACHES AND PROTRUDING OBJECTS

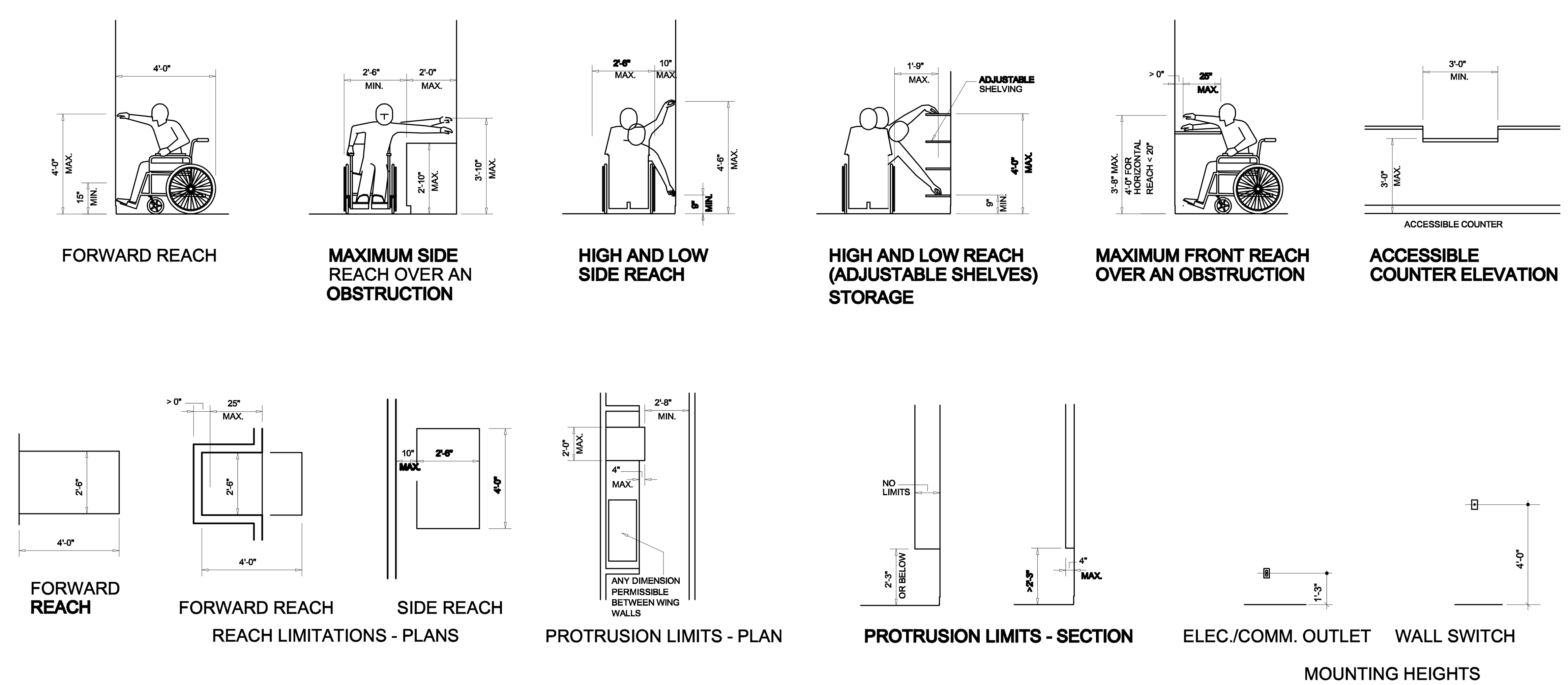

DOORS

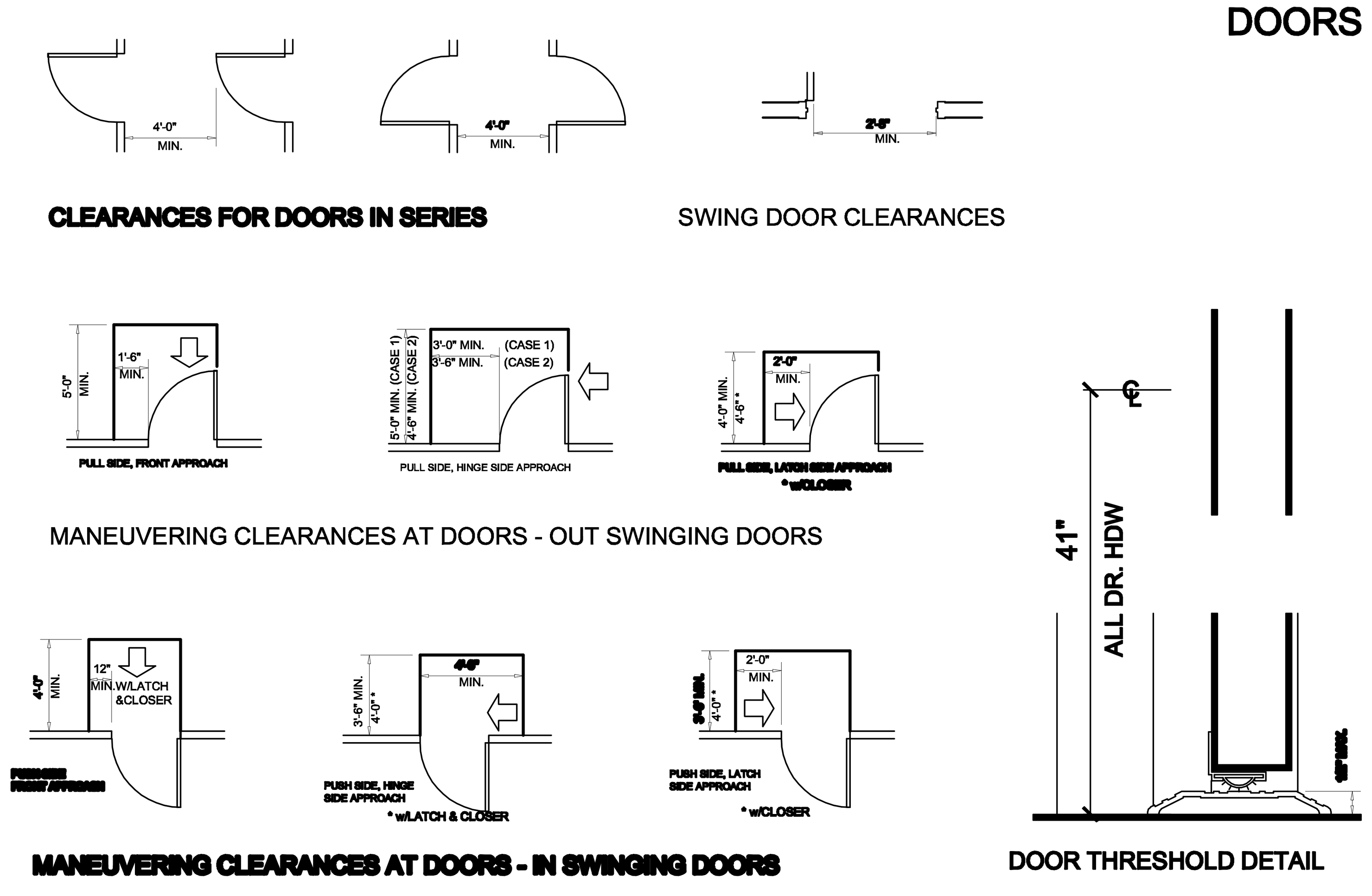

TOILET ROOMS

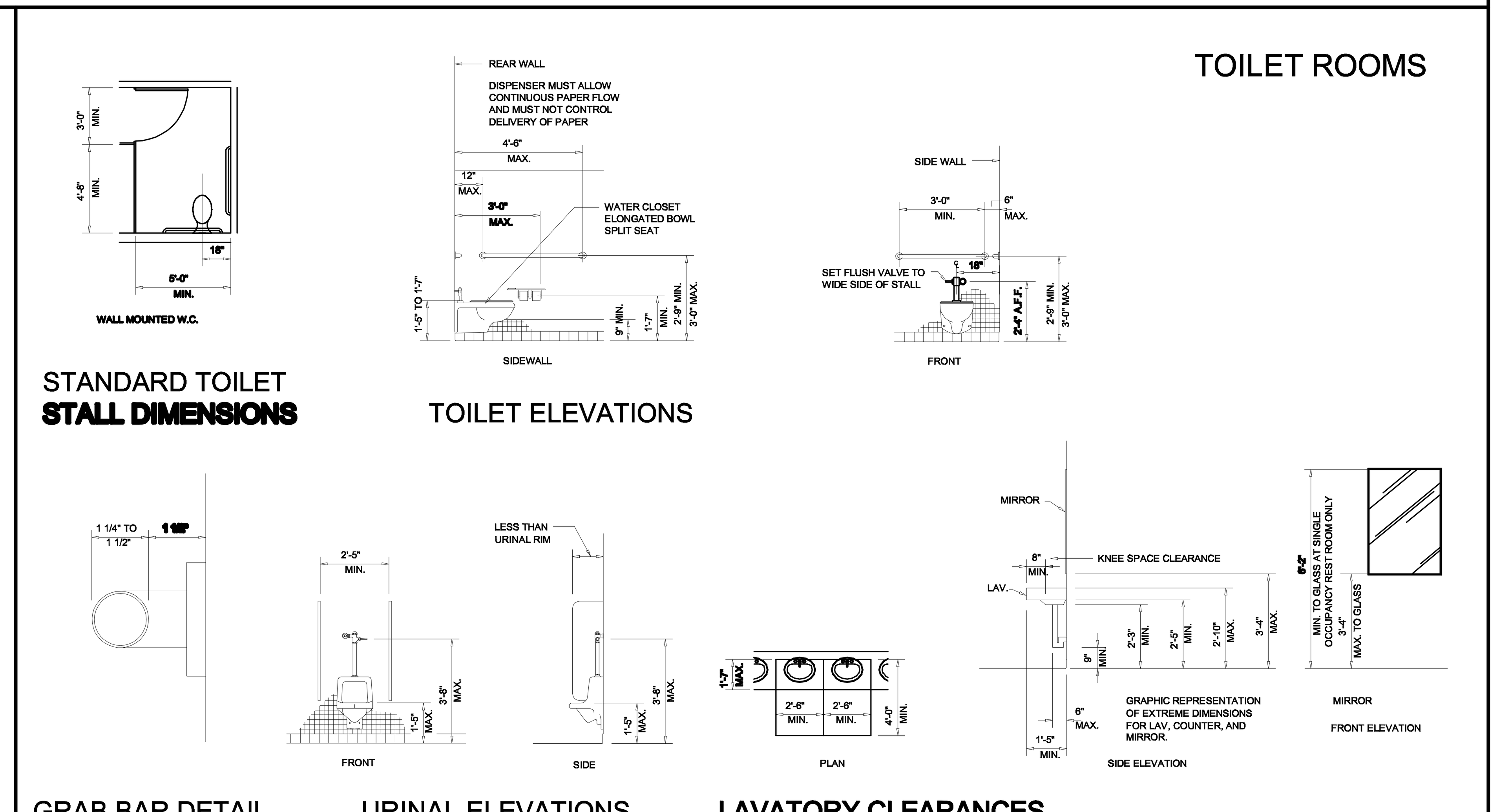

GENERAL NOTES

THIS SHEET IS FOR INFORMATION AND GUIDELINES ONLY
REFER TO ADA AND TAS FOR COMPLETE CRITERIA

1. INFORMATION SHOWN ON THIS SHEET IS THE MINIMUM REQUIRED FOR ADA COMPLIANCE.
2. ALL CONDITIONS SHOWN ON THIS SHEET MAY NOT BE REQUIRED BY THIS PROJECT. COMPARE THE REQUIREMENTS OF THE ARCHITECTURAL DRAWINGS WITH THIS SHEET FOR RELEVANT INFORMATION.
3. NOTIFY THE ARCHITECT IMMEDIATELY OF ANY DISCREPANCIES BETWEEN THE ARCHITECTURAL DRAWINGS AND INFORMATION GIVEN ON THIS SHEET FOR CLARIFICATION.

General Notes:

1. Minimum clear width of accessible route: 36".
2. Running slope shall not exceed 1:20. (Cross slope shall not exceed 1:50).
3. 1/4" to 1/2" changes in level require edge to be beveled with a slope no greater than 1:2.
4. The highest operable part of controls, dispensers, receptacles and other operable equipment shall be placed no higher than 4' and no lower than 1' 3" above the finish floor. These requirements shall apply to controls and operating mechanisms which are expected to be operable by occupants, visitors, or other users of a building or facility and may include but are not limited to, thermostats, light switches, alarm activated devices, ventilators or electrical outlets.
5. Provide solid blocking at all wall mounted accessories.

Ramps:

1. Maximum slope: 1:12.
2. Transitions shall be flush and free of abrupt changes.
3. Maximum slope of adjacent surfaces: 1:20.
4. Maximum clear width: 36".
5. Handrails required if rise exceeds 6" or run exceeds 72".
6. Handrails shall be provided in both sides or the ramp.
7. Inside rail on switch back or dogleg ramps shall be continuous.
8. Where no continuous, rails shall extend at least 12" beyond top and bottom of ramp parallel to the ground surface
9. Height or handrails: 35" (34–36).
10. Clear floor space between rails and any wall shall be 1–1/2".
11. Gripping surfaces shall be uninterrupted by newel posts, other construction elements, or obstructions.
12. Ends shall be rounded, or returned smoothly to floor, wall or post.
13. Handrails shall not rotate in their fittings.
14. Diameter or width of gripping surfaces shall be 1–1/4" to 1–1/2", or shall provide an equivalent gripping surface.
15. All required curb ramps shall have a groove surface w/grooves running perpendicular to route of travel.
16. All required curb ramps will be painted yellow for contrast.
17. Sides of required curb ramps will have a maximum of 1:10 slope.

Stairs:

1. All steps on all flights of stairs shall have uniform riser heights and tread widths. minimum tread depth shall be 11" unless otherwise noted, measured from riser to riser.
2. Underside of nosing shall not be abrupt.
   Radius of curvature at leading tread edge shall not exceed 1/2".
   Risers shall be sloped or underside of nosing shall have an angle not less than 60 degrees.
   Nosing shall project no more than 1–1/2".
3. Handrails are required at both sides of all stairs.
4. Inside rail on switch back or dogleg stairs shall be continuous.
5. Where no continuous, handrail extensions shall be provided as follows:
   Top of stairs flights: Parallel to floor, 12" minimum beyond top riser nosing.
   Bottom of stair flights: continue sloping for one tread width beyond bottom rise, plus 12" minimum parallel to floor.
6. Handrail height: 35" measured from stair nosing.
7. Clear floor space between rail and any wall shall be 1–1/2".
8. Gripping surfaces shall be uninterrupted by newel posts, other construction elements or obstructions.
9. Ends shall be rounded, or returned smoothly to floor, wall or post.
10. Handrails shall not rotate in their fittings.
11. Diameter or width of gripping surface shall be 1–1/4" to 1–1/2", or shall provide an equivalent gripping surface.

Doors:

Re: Clearance diagrams – this sheet

1. Doorways shall provide a clear opening of 32" min., with the door open 90 degrees.
2. Openings more than 24" in depth shall provide a clear opening of 36" minimum.
3. Max. Threshold height: 1/2".
4. Door hardware:
   Handless, pulls, latches, locks and other operating devices shall have a shape that is easy to grasp with one hand and does not require tight grasping, tight pinching or twisting of the wrist to operate.
5. Lever–operated mechanisms, push–type mechanisms, and U–shaped handles are acceptable designs.
6. Hardware required fro passage shall be mounted no higher than 47–1/2" above finished floor.
7. Door Closer: If a door has a closer, then the sweep period of the closer shall be adjusted so that from an open position of 70 degrees, the door will take at least 3 seconds to move to a point 3" from the latch, measured to the leading edge of the floor.
8. Door opening Force: The maximum force for pinching or pulling open a door shall be as follows:
   a. Exterior hinged doors: 8 lb.
   b. Interior hinged doors: 5 lb.
   c. Sliding or folding doors: 5 lb.
9. Automatic Doors and Power–assisted Doors: If an automatic door is used, then it shall comply with ANSI/BHMAA156.10–1985.
   Slowly opening, low powered, automatic doors shall comply with ANSIA156.19–1884.
   Such doors shall not open to back check faster than 3 seconds and shall required no more than 15 lb. to stop door movement.
   If a power–assisted door is used, its door opening force shall comply with forces listed above and its closing force shall comply with ANSIA156.19–1984.

Water Closets:

1. Water closets shall be located 18" to the center line from a side wall or partition.
2. The height to the top of the toilet seat shall be 17" to 19".
3. For water closets not located in toilet stalls, the following grab bars shall be provided, 34" above the finish floor.
   Side Wall: 42" long min., 12" from back wall.
   Back Wall: 36" long min., 12" min. each of water closet center line.
4. Flush controls shall be 28" above the finish floor.
   Controls for flush valves shall be mounted on the west side of toilet areas.
5. Toilet paper dispensers shall be installed on the side wall, below the grab bar, a minimum 19" above the floor, and a maximum 36" from the rear wall.
6. Toilet stalls will have a minimum depth of 7"–11".
7. Toilet stall doors will have no twist type hardware.

Urinals:

1. Urinals shall be wall hang with an elongated rim 17" maximum above the finish floor.
2. Flush controls shall be 44" maximum above the finished floor.

Lavatories and Mirrors:

1. Lavatories shall extend 17" minimum from the wall.
2. Clearance of 29" minimum shall be provided from finish floor to bottom of apron.
3. Knee clearance of 27" minimum shall extend 8" minimum under the edge of the lavatory.
4. Toe clearance of 9" minimum shall be provided for the full depth of the lavatory.
5. Hot water and drain pipes under lavatories shall be insulated or otherwise configured to protect against contact.
6. Mirrors shall be mounted with the bottom edge of the reflecting surface 40" maximum above the finish floor and the top edge 74" max. above finished floor.
7. If medicine cabinets are provided, at least one shall be located with a usable shelf no higher than 43–1/2" above the floor.

Sinks:

1. Knee clearance of 27" high minimum, 30" wide minimum and 19" deep minimum shall be provided underneath sinks.
2. Hot water and drain pipes under lavatories shall be insulated or otherwise configured to protect against contact.

Grab Bars:

1. Diameter or width of gripping surface shall be 1–1/4" to 1–1/2", or the shape shall provide an equivalent gripping surface.
2. The space between grab bars and adjacent walls shall be 1–1/2".
3. Grab bars shall not rotate within their fittings.
4. Grab bars and adjacent wall surfaces shall be free of sharp or abrasive surfaces.
5. Edges shall have a radius of 1/8" minimum.

Alarms:

1. Visual alarm signal appliances shall be placed 80 inches above the highest floor level within the space or 6" below the ceiling, whichever is lower.
2. Alarm system will meet ADA requirements including flashing lights at 100' max. spacing in corridors and eventually leased areas during tenant finish.

Signage:

1. Signs which designate permanent rooms and spaces shall comply with the requirements listed above for: Mounting Location and Height
   Where permanent identification is provided for rooms and spaces, signs shall be installed on the wall adjacent to the latch side of the door.
   Where there is no wall space to the latch side of the door, including at double–leaf doors, signs shall be placed on the nearest adjacent wall.
   Mounting height shall be 60" above the finish floor to the centerline of the sign
2. Exterior traffic crossing from ADA spaces to Building entrances shall receive yellow surface markings 8'–0" wide (min.) and ADA crossing warning signs for auto traffic.

TEXAS ACCESSIBILITY STANDARDS

Texas Department of Transportation
125 E. 11th Street
Austin, Texas 78701-2483
(512) 416-3048

Copyright © 2005 Texas Department of Transportation

THIS DOCUMENT IS RELEASED FOR THE PURPOSE OF INFORMATION ONLY
NOT FOR REGULATORY APPROVAL, PERMITTING, OR CONSTRUCTION.

EDCOUCH MAINTENANCE FACILITY
HIDALGO COUNTY, EDCOUCH TEXAS
PHARR DISTRICT

Revisions

Drawn by: -

Project No.

Date 05-26-2009

Sheet No. G1.2 of 2 sheets

NOTE: THIS DRAWING WAS CREATED FOR PRODUCTION ON 22" x 34" SHEET SIZE. DO NOT SCALE PRINTS.

GENERAL NOTES:

1. SHOULD THERE BE A CONFLICT BETWEEN PLANS AND SPECIFICATIONS, SPECIFICATIONS GOVERN AND ANY SPECIAL CONDITIONS WILL GOVERN OVER SPECIFICATIONS. SHOULD THERE BE A CONFLICT BETWEEN SPECIFICATIONS, THE MOST STRINGENT SPECIFICATION WILL GOVERN. REFERENCE THE 2004 TEXAS DEPARTMENT OF TRANSPORTATION STANDARD SPECIFICATIONS FOR CONSTRUCTION AND MAINTENANCE OF HIGHWAYS, STREETS, AND BRIDGE (OR MOST RECENT VERSION) FOR ADDITIONAL INFORMATION.

2. CONTRACTOR SHALL PROVIDE A UNIT PRICE LIST FOR ALL ITEMS REQUIRED TO SATISFACTORILY COMPLETE PROJECT AS SHOWN ON THESE PLANS.

3. CONTRACTOR SHALL IMMEDIATELY NOTIFY THE ENGINEER OF ANY QUESTIONS THAT MAY ARISE CONCERNING THE INTENT, PLACEMENT, OR LIMITS OF DIMENSIONS OR GRADES NECESSARY FOR CONSTRUCTION OF THIS PROJECT.

4. SEE DETAIL SHEETS FOR ALL APPLICABLE DETAILS.

5. CONTRACTOR SHALL TAKE ALL NECESSARY PRECAUTIONS (USE OF SILT FENCES, ETC.) TO KEEP DRAINAGE AND SILT FROM WASHING ONTO ADJACENT PROPERTY OR CROSSING ADJACENT STREETS. CONTRACTOR SHALL IMMEDIATELY REMOVE SILT/ DEBRIS THAT WASHES OFFSITE OR INTO EXISTING STORM DRAIN SYSTEMS.

6. THE CONTRACTOR SHALL BE RESPONSIBLE FOR FURNISHING AND MAINTAINING ALL SIGNS, BARRICADES, AND LIGHTING OR WARNING DEVICE(S) USED/REQUIRED WITH THIS WORK. FOR TRAFFIC BARRICADES, REFER TO TxDoT SPEC – ITEM 502.

7. TRAFFIC CONTROL AND PROTECTION DEVICES SHALL BE USED AND SHALL CONFORM TO THE TEXAS MANUAL ON UNIFORM TRAFFIC CONTROL DEVICES (TMUTCD). BARRICADES, WARNING SIGNS, FLASHING DEVICES, AND FLAGPERSONS SHALL BE PROVIDED BY THE CONTRACTOR. IF AT ANY TIME DURING CONSTRUCTION THE CONTRACTOR'S PROPOSED PLAN FOR HANDLING TRAFFIC DOES NOT PROVIDE FOR THE SAFE, COMFORTABLE MOVEMENT OF TRAFFIC, THE CONTRACTOR SHALL IMMEDIATELY CHANGE HIS/HER OPERATION TO CORRECT THE UNSATISFACTORY CONDITION. THIS SHALL BE PAID FOR AT THE EXPENSE OF THE CONTRACTOR. ALL TRAFFIC CONTROL DEVICES SHALL HAVE ASTM TYPE–III HIGH INTENSITY SHEETING.

8. THE CONTRACTOR SHALL BE RESPONSIBLE FOR ACQUIRING ALL NECESSARY PERMITS BEFORE BEGINNING CONSTRUCTION. CONTRACTOR SHALL HAVE AT LEAST ONE SET OF APPROVED ENGINEERING PLANS AND SPECIFICATIONS ON–SITE AT ALL TIMES.

9. ALL CONSTRUCTION OPERATIONS SHALL BE ACCOMPLISHED IN ACCORDANCE WITH APPLICABLE STATE STATUTES AND U.S. OCCUPATIONAL SAFETY DEPARTMENT OF LABOR AND HEALTH ADMINISTRATION. INFORMATION AND RELATED REFERENCE MATERIALS MAY BE OBTAINED FROM O.S.H.A. AT:
   1033 LA POSADA DR, SUITE 375
   AUSTIN, TEXAS 78752–3832
   PH – (512) 374–0271
   FAX – (512) 374–0086

10. COMPACTION REQUIREMENTS:
    SUBGRADE (UNLESS OTHERWISE NOTED) – SCARIFY TOP 6" OF EXISTING SUBGRADE & RECOMPACT TO 95% OF MAXIMUM–DENSITY PER TXDOT, TEX 114–E TO 2%(+/–) OF THE OPTIMUM MOISTURE CONTENT.

    GENERAL FILL (UNLESS OTHERWISE NOTED) – SCARIFY TOP 6" OF EXISTING SUBGRADE & RECOMPACT TO 90% OF MAXIMUM–DENSITY PER TXDOT, TEX 114–E TO 2%(+/–) OF THE OPTIMUM MOISTURE CONTENT.

11. CONTRACTOR SHALL BE RESPONSIBLE FOR RESTORING TO ITS ORIGINAL OR BETTER CONDITION ANY DAMAGE DONE TO EXISTING UTILITIES, FENCES, PAVEMENT, CURBS, DRIVEWAYS, SIDEWALKS, LANDSCAPING, STRUCTURES, OR SIGNS.

12. THE CONTRACTOR SHALL SAW CUT EXISTING PAVEMENT, CURBS AND SIDEWALKS AT NEW PAVEMENT, CURB AND SIDEWALK JUNCTURES, NO JAGGED OR IRREGULAR CUTS WILL BE ACCEPTED.

13. THE CONTRACTOR SHALL BE RESONSIBLE FOR ALL SOILS TESTING AND SHALL BE SUPPLIED AT HIS/HER EXPENSE.

14. CONTRACTOR IS RESPONSIBLE FOR CONSTRUCTION STAKING.

15. ALL MATERIALS AND CONSTRUCTION PROCEDURES WITHIN THE SCOPE OF THIS CONTRACT SHALL COMPLY WITH THE FOLLOWING AS APPLICABLE:
    A. CURRENT TEXAS COMMISSION ON ENVIRONMENTAL QUALITY TEXAS ADMINISTRATIVE CODE (TAC) 30, CHAPTERS 317, 285, 290, 217 AND 213 IN THEIR ENTIRETY.
    B. CURRENT TXDOT "STANDARD SPECIFICATIONS FOR CONSTRUCTION OF HIGHWAYS, STREETS AND DRAINAGE" – 2004 (OR LATEST EDITION)
    C. SELECT ITEMS NOT COVERED BY THE TWO ABOVE MENTIONED SHALL BE COVERED BY THE PROJECT SPECIFICATIONS

16. THE CONTRACTOR SHALL VERIFY THE EXACT LOCATION OF UNDERGROUND UTILITIES AND DRAINAGE STRUCTURES AT LEAST 48 HOURS PRIOR TO CONSTRUCTION WHETHER SHOWN ON PLANS OR NOT, AND TO PROTECT THE SAME DURING CONSTRUCTION. THE FOLLOWING NUMBERS ARE PROVIDED TO ASSIST THE CONTRACTOR:
    TEXAS STATE WIDE ONE CALL: 800–545–6005
    TEXAS EXCAVATION SAFETY SYSTEM (TESS): 800–DIG–TESS

17. LOCAL AGENCY PHONE NUMBERS:
    EMERGENCY: 911
    EDCOUCH POLICE DEPARTMENT: 956–262–2149
    EDCOUCH FIRE DEPARTMENT: 956–262–5522

18. THE CONTRACTOR SHALL AVOID CUTTING ROOTS LARGER THAT ONE INCH IN DIAMETER WHEN EXCAVATING NEAR EXISTING TREES. EXCAVATION IN VICINITY OF TREES SHALL PROCEED WITH CAUTION. THE CONTRACTOR SHALL CONTACT THE OWNER DESIGNATED REPRESENTATIVE FOR GUIDANCE. CONSTRUCTION INSPECTOR SHALL ALSO BE NOTIFIED.

19. ALL CONSTRUCTION ACTIVITIES INCLUDING MATERIAL STORAGE AND STAGING AREA SHALL BE WITHIN THE CONSTRUCTION LIMITS INDICATED ON THE DRAWINGS. USE OF THE AREA WITHIN THE CONSTRUCTION LIMITS FOR THESE PURPOSES WILL BE RESTRICTED TO THOSE LOCATIONS WHERE DRIVER SIGHT DISTANCE TO BUSINESSES AND SIDE STREET INTERSECTIONS IS NOT OBSTRUCTED AND AT OTHER LOCATIONS WHERE AN UNSIGHTLY APPEARANCE, AS DETERMINED BY THE OWNER, WILL NOT EXIST.

20. THE CONTRACTOR SHALL NOT PLACE ANY WASTE MATERIALS IN A 100–YEAR FLOOD PLAIN WITHOUT FIRST OBTAINING AN APPROVED FLOOD PLAIN PERMIT.

21. CONTRACTOR SHALL FIELD VERIFY ALL CONDITIONS AND LOCATIONS OF ABOVE GROUND EXISTING EQUIPMENT. PIPING, GRADES, VEGETATION, ETC. TO DETERMINE EXACT SIZE AND LOCATION PRIOR TO BID.

22. CONTRACTOR SHALL NOT ENGAGE IN ACTIVITY IN WHICH PERSONS OR EQUIPMENT MAY COME WITHIN 10–FT OF ENERGIZED OVERHEAD POWER LINES. FEDERAL REGULATION, TITLE 29, PART 1910.190(1) AND PART 1926.440(A)(15) REQUIRE CLEARANCE OF 10–FT FROM THESE FACILITIES.

23. COORDINATE WITH OWNER DESIGNATED REPRESENTATIVE AND ASSOCIATED UTILITY(S) FOR SCHEDULING ANY/ALL DOWNTIMES OR DISRUPTIONS OF SERVICES. ALL DISRUPTIONS MUST BE KEPT TO A MINIMUM DURATION. CONTRACTOR SHALL USE MULTIPLE SHIFTS FOR ALL TRADES WHERE REQUIRED TO ACCOMPLISH OWNER'S LIMITATION OF DOWNTIME/DISRUPTIONS. OWNER TO BE NOTIFIED A MINIMUM OF 24 HOURS IN ADVANCE OF ANY UTILITY SHUTDOWN.

24. THE CONTRACTOR SHALL BE RESPONSIBLE FOR ALL COORDINATION BETWEEN HIM/HERSELF, OTHER CONTRACTORS, AND THE UTILITIES IN THE VICINITY OF THIS PROJECT. ONCE THE CONTRACTOR BECOMES AWARE OF A POSSIBLE CONFLICT, IT IS THE CONTRACTOR'S RESPONSIBILITY TO NOTIFY THE PROJECT INSPECTOR/ENGINEER WITHIN 24 HOURS.

25. BLASTING WITHIN THE PROJECT AREA WILL NOT BE ALLOWED.

26. NO EXTRA–PAYMENT SHALL BE ALLOWED FOR WORK CALLED FOR ON THE PLANS BUT NOT INCLUDED ON THE BID SCHEDULE. THIS INCIDENTAL WORK WILL BE REQUIRED AND SHALL BE INCLUDED UNDER THE PAY ITEM TO WHICH IT RELATES.

27. REMOVE FENCING AS NECESSARY FOR WORK SPACE. PROVIDE NEW FENCE MATCHING EXISTING INSTALLED IN SAME LOCATION. FENCE TO BE INSTALLED AS SOON AS WORK IN THIS AREA IS COMPLETED.

28. THE CONTRACTOR SHALL PROVIDE AT LEAST ONE CHEMICALLY TREATED PORTABLE TOILET FOR EVERY 20 WORKMEN ON THE JOB SITE, A MINIMUM OF 1 TOILET IS REQUIRED. THE UNIT(S) SHALL REMAIN ON THE SITE DURING ALL OF THE PHASES OF CONSTRUCTION. THE CONTRACTOR SHALL ENFORCE THE USE OF FACILITIES BY ALL PERSONNEL AT THE SITE. THE UNIT SHALL BE OBSCURED FROM PUBLIC VIEW TO THE GREATEST EXTENT PRACTICABLE.

29. THESE PLANS AND ANY ATTENDANT DRAWINGS (INCLUDING SHOP DRAWINGS, "AS–BUILT" DRAWINGS, RECORDED DRAWINGS), ADDENDA, CHANGE ORDERS, AND SPECIFICATIONS, PREPARED BY THE ENGINEER, DO NOT EXTEND TO OR INCLUDE DESIGNS OR SYSTEMS PERTAINING TO THE SAFETY OF THE CONSTRUCTION, CONTRACTOR OR ITS EMPLOYEES, AGENT OR REPRESENTATIVES IN THE PERFORMANCE OF THE WORK. THE ENGINEER'S SEAL AFFIXED TO THESE PLANS DOES NOT EXTEND TO ANY SUCH SAFETY SYSTEMS THAT MAY NOW OR HEREAFTER BE INCORPORATED IN THESE PLANS. THE CONSTRUCTION CONTRACTOR SHALL INCLUDE THE PLANS AND SPECIFICATIONS REQUIRED BY THE TEXAS HEALTH & SAFETY CODE, CHAPTER 756, SUBCH C.

30. CONTRACTOR SHALL MAINTAIN THE JOB SITE IN A SAFE, NEAT, AND WORKMAN–LINE MANNER AT ALL TIMES. ANY UNATTRACTIVE NUISANCE SHALL BE REMOVED OR CAMOUFLAGED BY CONTRACTOR WHEN DIRECTED BY THE OWNER.

31. CONTRACTOR IS RESPONSIBLE FOR ALL WORK REQUIRED TO SATISFACTORILY COMPLETE PROJECT AS SHOWN ON THESE PLANS.

DEMOLITION NOTES:

1. THE POTENTIAL EXIST FOR ASBESTOS CONTAINING MATERIALS TO BE DISCOVERED IN AREAS YET UNSURVEYED, UNTESTED OR UNKNOWN. ACCORDINGLY, ALL CONTRACTORS AND SUBCONTRACTORS SHALL INFORM ALL PROJECT WORKERS AS TO THIS POTENTIAL HAZARD, AND SHALL INSTRUCT THEM OF ALL THE ACTIONS TO FOLLOW IN THE EVENT SUSPICIOUS MATERIALS ARE DISCOVERED. THE INFORMATION AND INSTRUCTION SHALL BE REPEATED AT EACH PROJECT/SAFETY MEETING, BUT NOT LESS THAN WEEKLY. CONTACT THE OWNER IMMEDIATELY SHOULD ANY SUSPICIOUS MATERIALS BE DISCOVERED.

2. ALL EXISTING ITEMS THAT ARE NOT SPECIFICALLY NOTED TO BE REMOVED SHALL REMAIN. CONTRACTOR IS RESPONSIBLE FOR REPLACING EXISTING ITEMS REMOVED DURING DEMOLITION THAT WERE TO REMAIN.

3. ALL EXISTING TREES SHALL REMAIN UNLESS OTHERWISE NOTED. CONTRACTOR SHALL IMMEDIATELY NOTIFY OWNER AND ENGINEER SHOULD ANY QUESTIONS ARISE REGARDING EXISTING TREES. CONTRACTOR SHALL PROVIDE ADEQUATE PROTECTION TO PREVENT DAMAGE TO TREES OR ROOT SYSTEMS OF TREES. ANY TREES DAMAGED OR KILLED DURING CONSTRUCTION WILL BE REPLACED BY THE CONTRACTOR AT NO EXPENSE TO THE OWNER.

4. THE CONTRACTOR SHALL SAW–CUT EXISTING PAVEMENT, CURBS AND SIDEWALKS AT LOCATIONS AS SHOWN ON THE PLANS. NO JAGGED OR IRREGULAR CUTS IN PAVEMENT, CURBS OR SIDEWALKS WILL BE ALLOWED OR ACCEPTED.

5. CONTRACTOR SHALL IMMEDIATELY NOTIFY THE OWNER AND ENGINEER REGARDING ANY QUESTIONS FOR DEMOLITION WORK ON THIS PROJECT.

6. EXISTING UTILITIES SHOWN ON THIS LAYOUT ARE FROM THE BEST INFORMATION SOURCES AVAILABLE AT THE TIME OF DESIGN BUT MAY NOT REPRESENT ALL EXISTING UTILITIES ON SITE. THE CONTRACTOR NEEDS TO ALLOW FOR THE POSSIBILITY OF UNDETECTED UNDERGROUND UTILITIES. ALSO, THE CONTRACTOR MUST ALLOW FOR CHANGES DUE TO UTILITIES BEING IN LOCATIONS DIFFERENT FROM THOSE SHOWN ON THE UTILITY RECORD DRAWINGS. THE CONTRACTOR IS RESPONSIBLE FOR LOCATING AND EXPOSING CONFLICTS PRIOR TO CONSTRUCTION.

7. CONTRACTOR SHALL TAKE PRECAUTIONS WHEN EXCAVATING FOR THIS PROJECT. UTILITIES ARE KNOWN TO EXIST AROUND THE EXCAVATION SITE, HOWEVER THEIR EXACT LOCATION/ALIGNMENT, & DEPTH IS UNKNOWN. IT IS THE CONTRACTORS RESPONSIBILITY TO TAKE PRECAUTIONS WHEN LOCATING/ENCOUNTERING UNKNOWN UTILITIES.

8. LOCATION AND DEPTH OF EXISTING UTILITIES SHOWN HEREON ARE APPROXIMATE ONLY. ACTUAL LOCATIONS AND DEPTHS MUST BE VERIFIED BY THE CONTRACTOR PRIOR TO BEGINNING CONSTRUCTION AND THE CONTRACTOR SHALL BE RESPONSIBLE FOR THE PROTECTION OF SAME DURING CONSTRUCTION.

9. CONTRACTOR SHALL PROTECT ALL EXISTING UTILITIES THAT ARE TO REMAIN DURING THE COURSE OF CONSTRUCTION. EXISTING UTILITIES WHICH ARE DAMAGED WILL BE REPLACED AT THE EXPENSE OF THE CONTRACTOR.

10. THE CONTRACTOR SHALL PREVENT DAMAGE TO ALL EQUIPMENT BEING REMOVED (SIGNS, LIGHT POLES, ETC.), AND THE CONTRACTOR SHALL COORDINATE WITH THE OWNER REGARDING THE OWNER'S PREFERENCE AS TO WHERE ALL SALVAGED MATERIAL(S) SHALL BE RELOCATED TO.

TRENCH EXCAVATION SAFETY PROTECTION:

CONTRACTOR AND/OR CONTRACTOR'S INDEPENDENTLY RETAINED EMPLOYEE OR STRUCTURAL DESIGN/GEOTECHNICAL/SAFETY/EQUIPMENT CONSULTANT, IF ANY, SHALL REVIEW THESE PLANS AND AVAILABLE GEOTECHNICAL INFORMATION AND THE ANTICIPATED INSTALLATION SITE(S) WITHIN THE PROJECT WORK AREA IN ORDER TO IMPLEMENT CONTRACTOR'S TRENCH EXCAVATION SAFETY PROTECTION SYSTEMS, PROGRAMS AND/OR PROCEDURES. THE CONTRACTOR'S IMPLEMENTATION OF THE SYSTEMS, PROGRAMS AND/OR PROCEDURES SHALL PROVIDE FOR ADEQUATE TRENCH EXCAVATION SAFETY PROTECTION THAT COMPLIES WITH AS A MINIMUM, OSHA STANDARDS FOR TRENCH EXCAVATIONS. SPECIFICALLY, CONTRACTOR AND/OR CONTRACTOR'S INDEPENDENTLY RETAINED EMPLOYEE OR SAFETY CONSULTANT SHALL IMPLEMENT A TRENCH SAFETY PROGRAM IN ACCORDANCE WITH OSHA STANDARDS GOVERNING THE PRESENCE AND ACTIVITIES OF INDIVIDUALS WORKING IN AND AROUND TRENCH EXCAVATION.

GENERAL NOTES

NOTE: THIS DRAWING WAS CREATED FOR PRODUCTION ON 22" X 34" SHEET SIZE. DO NOT SCALE PRINTS.

Texas Department of Transportation
125 E. 11th Street
Austin, Texas 78701-2483
(512) 416-3048
Copyright©2008 Texas Department of Transportation

THIS DOCUMENT IS RELEASED FOR THE PURPOSE OF
INFORMATION ONLY
NOT FOR REGULATORY
APPROVAL, PERMITTING,
OR CONSTRUCTION.

EDCOUCH
MAINTENANCE FACILITY
HIDALGO COUNTY, EDCOUCH TEXAS
PHARR DISTRICT

Revisions

Drawn by:
STAFF
Project No.
--
Date
5/22/09
Sheet No.
C1.0
of X sheets

CADFILE T:\MNTFM\002FTW\CBC4704-00-837\02-77-4704008837\Acad\prototypical pdfs\edcouch\Acad\Civil\316 GEN NOTES.dwg Plotted: Tue. Aug. 11, 2009 @ 9:33 AM By: MBAZAN

PAVING NOTES:

1. ALL BARRIER FREE RAMPS SHALL COMPLY WITH THE CURRENT TDLR AND TxDoT REGULATIONS.
2. ALL EXTERIOR FLAT CONCRETE SHALL BE BROOM FINISHED.
3. HMAC PAVEMENT SHALL NOT BE PAVED IN CONCRETE GUTTERS.
4. REFERENCE DETAIL FOR TYPICAL PAVEMENT SECTIONS.

ENVIRONMENTAL NOTES:

1. THE PLACEMENT OF EROSION/SEDIMENTATION CONTROLS SHALL BE IN ACCORDANCE WITH THE PLANS AND IN PLACE PRIOR TO OTHER CONSTRUCTION RELATED ACTIVITIES.
2. NO SOIL DISTURBING ACTIVITIES SHALL OCCUR PRIOR TO THE SW3P AND ASSOCIATED BEST MANAGEMENT PRACTICES BEING FULLY IMPLEMENTED AND INSPECTED BY THE TxDoT DISTRICT ENVIRONMENTAL COORDINATOR. THE CONTRACTOR SHALL SCHEDULE THE ON-SITE MEETING.
3. SEEDING FOR EROSION CONTROL SHALL BE IN ACCORDANCE WITH ITEMS 164 & 166, TxDoT SS2004, FOR THE PHARR DISTRICT, PERMANENT URBAN SEED MIX.
4. SW3P TO BE FURNISHED BY CONTRACTOR. REFERENCE SHEET C3.0 FOR PLAN.
5. THE NOTICE OF INTENT (NOI) SHALL BE POSTED IN A LOCATION VIEWABLE TO THE PUBLIC UNTIL CONSTRUCTION IS COMPLETE AND THE NOTICE OF TERMINATION (NOT) SUBMITTED.
6. THE CONTRACTOR OR HIS/HER REPRESENTATIVE SHALL REVIEW THE SITE WEEKLY AND AFTER ANY MAJOR STORM. ASJUSTMENTS/REPAIRS SHALL BE MADE AS NEEDED AND THE DISTRICT ENVIRONMENTAL COORDINATOR NOTIFIED OF ADJUSTMENTS.
7. CONTRACTOR SHALL REVEGITATE DISTURBED AREAS UPON COMPLETION OF GRADING ACTIVITIES.
8. EXCESS EXCAVATED MATERIAL SHALL NOT BE DEPOSITED IN LOW AREAS OF ALONG NATURAL DRAINAGE WAYS. IF THE CONTRACTOR PLACES EXCESS MATERIAL IN DRAINAGE WAYS, HE/SHE SHALL BE RESPONSIBLE FOR ALL DAMAGE RESULTING FROM SUCH FILL AND HE/SHE SHALL REMOVE THE MATERIAL AT HIS COST.
9. UPON THE COMPLETION OF CONSTRUCTION, THE R.O.W. LANDSCAPING SHALL BE RESTORED.

UTILITY CONSTRUCTION NOTES:

1. THE LOCATIONS AND DEPTHS OF EXISTING UTILITIES SHOWN ON THESE PLANS ARE APPROXIMATE ONLY. ACTUAL LOCATIONS AND DEPTHS OF UTILITIES MUST BE VERIFIED BY THE CONTRACTOR PRIOR TO CONSTRUCTION. IT SHALL BE THE CONTRACTOR'S RESPONSIBILITY TO LOCATE UTILITY SERVICE LINES AS REQUIRED FOR CONSTRUCTION, PROTECT THEM DURING CONSTRUCTION, AND NOTIFY THE ENGINEER OF ANY CONFLICTS IMMEDIATELY. ANY DAMAGE BY THE CONTRACTOR TO EXISTING UTILITIES, WHETHER SHOWN ON THE PLANS OR NOT, SHALL BE THE CONTRACTOR'S RESPONSIBILITY TO REPAIR, AT HIS EXPENSE.
2. IN AREAS WHERE LARGE EXCAVATING EQUIPMENT COULD DAMAGE EXISTING UTILITIES, CONTRACTOR SHALL HAND EXCAVATE AROUND CONFLICTING UTILITIES.
3. THE CONTRACTOR SHALL BE RESPONSIBLE FOR ACQUIRING ALL PERMITS, TESTS, APPROVALS AND ACCEPTANCES REQUIRED TO COMPLETE CONSTRUCTION OF THIS PROJECT.
4. CONTRACTOR SHALL VERIFY THE EXACT LOCATION OF UNDERGROUND UTILITIES AND DRAINAGE SYSTEMS WHETHER SHOWN ON PLANS OR NOT. IT IS RECOMMENDED THAT THE CONTRACTOR RETAIN A UTILITY LOCATING CONTRACTOR TO MAXIMIZE IDENTIFICATION OF EXISTING UTILITIES.
5. WHEN WATER LINES ARE INSTALLED IN THE VICINITY OF SEWER MAINS, SUCH INSTALLATION SHALL BE IN STRICT ACCORDANCE WITH TCEQ 30 TAC 290.
6. DUE TO FEDERAL REGULATIONS TITLE 49, PART 192.181, THE LOCAL NATURAL GAS PROVIDER MUST MAINTAIN ACCESS TO GAS VALVES AT ALL TIMES. THE CONTRACTOR MUST PROTECT AND WORK AROUND ANY GAS VALVES THAT ARE IN THE PROJECT AREA
7. ALL SPOIL AND OTHER UNSUITABLE MATERIAL FROM THIS WORK SHALL BE REMOVED FROM THE SITE BY THE CONTRACTOR, AT HIS/HER EXPENSE.
8. NO WATER JETTING TO BACKFILL TRENCHES WILL BE ALLOWED ON THIS PROJECT.
9. PROVIDE SEDIMENT CONTAMINATION PROTECTION AS REQUIRED FOR EXISTING GRADE. AS A MINIMUM, PROVIDE SILT FENCING. CONTRACTOR SHALL PROVIDE MORE EFFECTIVE LEVELS OF SEDIMENT CONTAMINATION PROTECTION IF SILT FENCE IS NOT SUFFICIENT.
10. PROVIDE CONSTRUCTION ENTRANCE, WHERE APPLICABLE, TO CONTROL SEDIMENT ON PUBLIC PAVEMENT.
11. ALL WATER AND WASTEWATER IMPROVEMENTS SHALL BE CONSTRUCTED IN ACCORDANCE WITH TEXAS COMMISSION ON ENVIRONMENTAL QUALITY (TCEQ) CHAPTERS 213, 217, 290, 285 & 317 AND CONFORM TO CURRENT AWWA REQUIREMENTS.
12. ALL UTILITY WORK WITHIN TxDoT R.O.W. REQUIRES A UTILITY PERMIT FROM THE TxDoT DISTRICT OFFICE AND SHALL PROVIDE TRAFFIC CONTROL MEASURES IN ACCORDANCE WITH THE TMUTCD.
13. CONTRACTOR WILL BE RESPONSIBLE FOR COST INCURRED AS A RESULT OF UTILITY RELOCATIONS PERFORMED FOR CONTRACTOR'S CONVENIENCE.
14. WATER LINES 2" OR LESS MAY BE TYPE K COPPER, OR GASKETED SCH 80 PVC WITH A MINIMUM RATED WORKING PRESSURE OF 150psi. WATER LINES 4" AND GREATER WILL BE AWWA C-900.
15. VALVES LESS THAN 4" WILL BE BRASS BALL VALVES, VALVES 4" AND GREATER WILL BE IRON BODY GATE VALVES. ALL VALVES SHALL BE PLACED IN VALVE BOXES WITH BALL VALVES IN CONCRETE BOXES WITH CAST IRON LIDS AND GATE VALVES IN CAST IRON BOOTS WITH CAST IRON LIDS. ALL VALVE BOXES SHALL BE MINIMUM H-20 LOAD RATING.
16. ALL WATER LINES SHALL BE INSTALLED WITH A TRACER TAPE OR WIRE.
17. ALL WATER SERVICE LINES SHALL BE EMBEDDED WITH 6" OF SAND BELOW AND AROUND THE PIPE AND 12" OF SAND OVER THE TOP OF THE PIPE.
18. ALL BENDS 4" AND GREATER SHALL BE RESTRAINED JOINTS AND/OR THRUST BLOCKED.
19. INSTALL 2'x2'x8" THICK REINFORCED CONCRETE PAD AROUND ALL VALVE AND CLEANOUT STACKS NOT LOCATED IN FLOWER BEDS.
20. INSTALL 5'x5'x8" THICK REINFORCED CONCRETE PAD AROUND ALL MANHOLES.

SANITARY SEWER CONSTRUCTION NOTES:

1. ALL SANITARY SEWER EXCAVATIONS SHALL BE PERFORMED IN ACCORDANCE WITH THE DEPTHS AND ALIGNMENTS SHOWN ON THE DRAWINGS.
2. FINISHED ELEVATIONS ON THE SANITARY SEWER CLEANOUTS NOT IN PAVEMENT SHALL BE 3-INCHES ABOVE FINISHED GRADE. SANITARY SEWER CLEANOUTS INSTALLED IN PAVEMENT SHALL BE FLUSH WITH GRADE. CLEAN FILL SHALL BE ADDED AND SLOPED FROM ALL RIMS TO ENSURE POSITIVE DRAINAGE.
3. ALL WASTEWATER LINES 4" AND GREATER SHALL BE GASKETED PVC SDR-26 (115 CLASS).
4. ALL PVC PIPE (ALL TYPES AND SDR/DR WALL THICKNESS TO BE USED) SHALL HAVE RUBBER GASKET EQUIPMENT BELL & SPIGOT JOINTS, CONFORMING TO ASTM D3212. THE GASKET MATERIAL SHALL CONFORM TO ASTM F-477. SOLVENT WELDED JOINTS ARE NOT APPROVED UNLESS OTHERWISE NOTED.
5. ALL MANHOLES SHALL HAVE BOLT DOWN WATER TIGHT LIDS.
6. FOR NON-SHRINK GROUT, USE PRE-PACKAGED INORGANIC, FLOWABLE, NON-GAS-LIBERATING, NON-METALLIC, CEMENT BASED GROUT REQUIRING ONLY ADDITION OF WATER. IT SHALL MEET THE REQUIREMENTS OF ASTM C1107 AND SHALL HAVE A MINIMUM 28-DAY COMPRESSIVE STRENGTH OF 7000psi.
7. SANITARY SEWER LINES CROSSING UNDER PROPOSED OR FUTURE WATER LINES WITH LESS THAN NINE FEET OF VERTICAL WALL TO WALL CLEARANCE SHALL BE BACKFILLED FOR NINE HORIZONTAL FEET TO EACH SIDE OF THE WATER LINE WITH CEMENT STABILIZED SAND TO A DEPTH OF ONE PIPE DIAMETER OR TWELVE INCHES (WHICHEVER IS GREATER) ABOVE THE SEWER LINE.
   - CEMENT STABILIZED SAND SHALL CONSIST OF TYPE 1 PORTLAND CEMENT CONFORMING TO ASTM C150. DESIGN SAND-CEMENT MIXTURE TO PRODUCE A MINIMUM UNCONFINED COMPRESSIVE STRENGTH OF 100psi IN 48 HOURS WHEN COMPACTED TO 95% IN ACCORDANCE WITH ASTM D8 AND WHEN CURED IN ACCORDANCE WITH ASTM D1632, AND TESTED IN ACCORDANCE WITH ASTM D1633. MIX SHALL CONTAIN A MINIMUM OF 1-1/2 SACKS OF CEMENT PER CUBIC YARD. COMPACT MIX WITH MOISTURE CONTENT ON THE DRY SIDE OF OPTIMUM.
   - SAND UTILIZED AS BACKFILL MATERIAL THROUGHOUT THE PROJECT SHALL BE CLEAN AND DURABLE MEETING GRADING REQUIREMENTS FOR FINE AGGREGATE OF ASTM C33. SAND SHALL BE CLASSIFIED AS SW, SP, OR SM AS PER ASTM D2487. CLAY LUMPS SHALL BE LESS THAN 0.5%, ASTM C142, LIGHTWEIGHT PIECES LESS THAN 0.5%, ASTM C123, ORGANIC IMPURITIES COLOR NO DARKER THAN THE STANDARD COLOR, ASTM C40.
8. WATER UTILIZED SHALL BE POTABLE, FREE OF OILS, ACIDS, ALKALIS, ORGANIC MATTER OR OTHER DELETERIOUS SUBSTANCES, MEETING ASTM C94.
9. SANITARY SEWER GRAVITY LINES NOT UNDER PAVEMENT SHALL BE EMBEDDED IN SAND TO ONE FOOT ABOVE THE CROWN OF PIPE. ADDITIONALLY, AT LEAST 6" OF SAND BELOW THE PIPE AND 12" OF SAND ON EACH SIDE OF THE PIPE SHALL BE PROVIDED AS PIPE EMBEDMENT. THE SAND SHALL BE PLACED IN 9" LIFTS AND COMPACTED TO 95% DRY DENSITY IN ACCORDANCE WITH TEX-113E AND TEX-114E. MOISTURE CONTENT SHALL BE WITHIN 3% OF OPTIMUM IN ACCORDANCE WITH TEX-113E AND TEX-114E. CLAY (CH) MAY BE UTILIZED IN THE TRENCH ZONE AS BACKFILL FOR LINES NOT UNDER PAVEMENT AT THE CONTRACTOR'S OPTION. COMPACTION IN 9" LIFTS FOR CLAYEY SOILS AND 12" LIFTS FOR GRANULAR SOILS IS REQUIRED, BACKFILL COMPACTION SHALL BE MINIMUM OF 90% OF MAXIMUM DRY DENSITY IN ACCORDANCE WITH TEX-113E AND TEX-114E. MOISTURE CONTENT SHALL BE AS NECESSARY TO ACHIEVE DENSITY.
10. CONTRACTOR TO VERIFY ADEQUACY OF BEDDING AND BACKFILL METHODS TO BE UTILIZED ON THE PROJECT AND SUBMIT A DESCRIPTION OF THE INTENDED BEDDING BACKFILL METHOD SEALED BY A PROFESSIONAL ENGINEER FOR APPROVAL BY TxDoT PRIOR TO COMMENCING CONSTRUCTION.
11. INSTALLATION OF PVC LINERS FOR CONCRETE STRUCTURES SHALL BE MANUFACTURED WITH INTERNAL LOCKING RIBS SPACED APPROXIMATELY 2-1/2" ON CENTER OVER THE ENTIRE LINER. LINERS RELYING ON MECHANICALLY FASTENED BATTEN STRIPS AS PRIMARY ANCHORAGE ARE UNACCEPTABLE. PLASTIC LINER SHALL BE MANUFACTURED BY AMERON PROTECTIVE LINING DIVISION, POLY-TEE INC., OR APPROVED EQUAL. PVC LINER IS TO BE EMBEDDED IN CONCRETE AND SHALL HAVE INTEGRAL LOCKING EXTENSIONS. LINER MAY NOT BE BONDED WITH ADHESIVES. CONTRACTOR TO SUBMIT PROPOSED MATERIAL MANUFACTURING AND INSTALLATION MEANS AND METHODS FOR APPROVAL PRIOR TO CONSTRUCTION.

GENERAL NOTES

NOTE: THIS DRAWING WAS CREATED FOR PRODUCTION ON 22" X 34" SHEET SIZE. DO NOT SCALE PRINTS.

Texas Department of Transportation
125 E. 11th Street
Austin, Texas 78701-2483
(512) 416-3048
Copyright©2008 Texas Department of Transportation

THIS DOCUMENT IS RELEASED FOR THE PURPOSE OF
INFORMATION ONLY
NOT FOR REGULATORY
APPROVAL, PERMITTING,
OR CONSTRUCTION.

EDCOUCH
MAINTENANCE FACILITY
HIDALGO COUNTY, EDCOUCH TEXAS
PHARR DISTRICT

Revisions

Drawn by:
STAFF
Project No.
--
Date
5/22/09
Sheet No.
C1.1
of X sheets

CADFILE: T:\MNTFMD02FTW\CBC4704-00-837\02-77-4704008837\Acad\prototypical pdfs\edcouch\Acad\Civil\316 GEN NOTES.dwg Plotted: Tue. Aug. 11, 2009 @ 9:31 AM By: MBAZAN

TEMPORARY BENCHMARK DATA
TBM #1: COTTON SPINDLE SET IN EAST FACE OF UTILITY POLE ELEV.=63.11
TBM #2: IRON ROD SET W/ ALUMINUM CAP ELEV.=61.33

NORTH

40' 20' 0 40' 80'

(IN FEET)

SCALE 1" = 40'

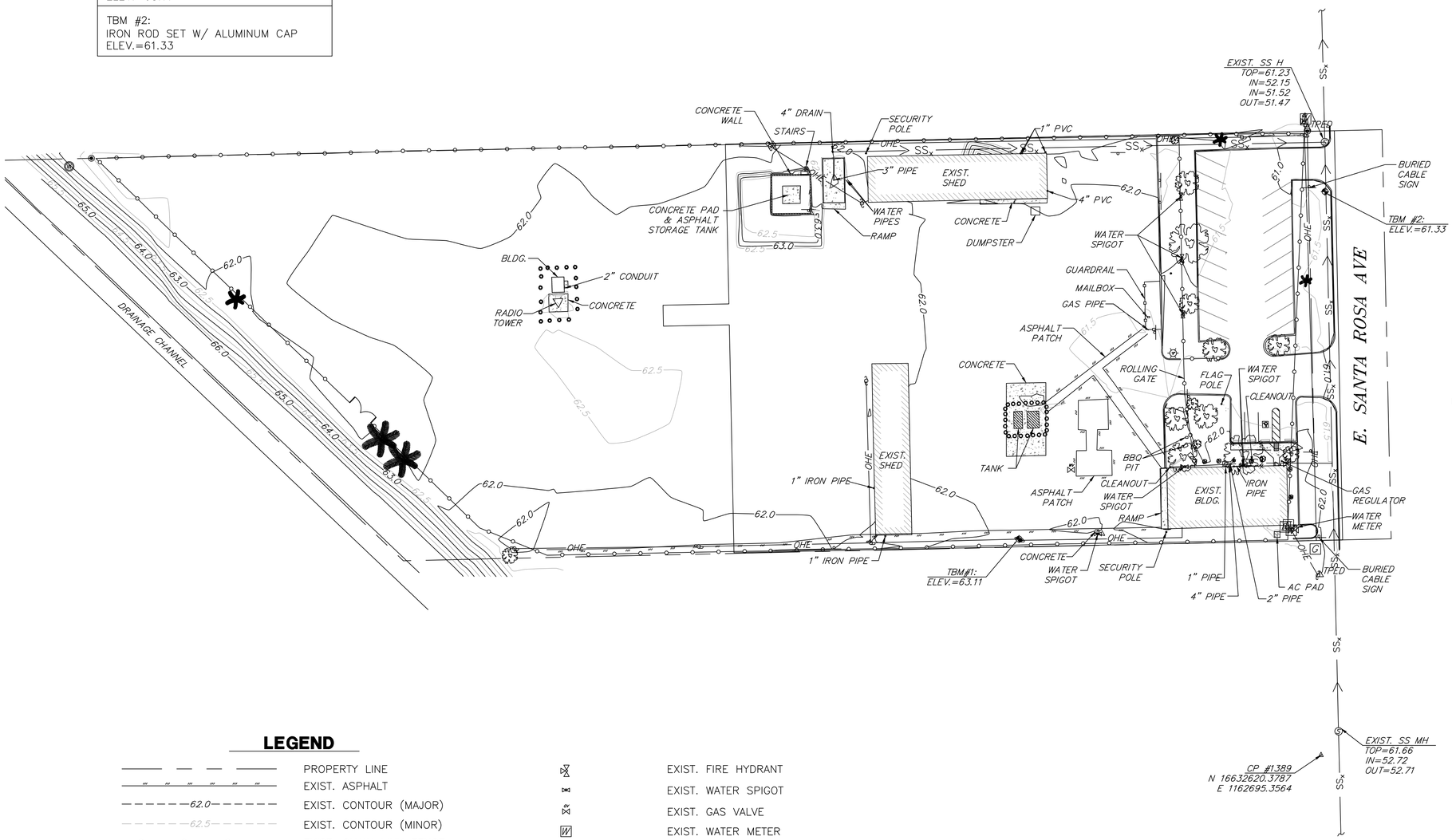

LEGEND

PROPERTY LINE	EXIST. FIRE HYDRANT
EXIST. ASPHALT	EXIST. WATER SPIGOT
EXIST. CONTOUR (MAJOR)	EXIST. GAS VALVE
EXIST. CONTOUR (MINOR)	EXIST. WATER METER
EXIST. CHAIN LINK FENCE	EXIST. SIGN
EXIST. GUARDRAIL	EXIST. GAS METER
EXIST. OVERHEAD ELECTRIC	EXIST. ELECTRIC BOX
EXIST. SANITARY SEWER LINE	EXIST. BOLLARD
EXIST. CONCRETE PAD	EXIST. SANITARY SEWER MANHOLE
EXIST. SIDEWALK	EXIST. GUY WIRE
EXIST. POWER POLE	EXIST. TELEPHONE PEDESTAL
EXIST. LIGHT POLE	EXIST. TEMPORARY BENCHMARK
EXIST. WATER VALVE	EXIST. IRON ROD
	EXIST. WELL
	EXIST. TREE
	EXIST. PALM TREE

EXISTING CONDITIONS

NOTE: THIS DRAWING WAS CREATED FOR PRODUCTION ON 22" X 34" SHEET SIZE. DO NOT SCALE PRINTS.

Texas Department of Transportation
125 E. 11th Street
Austin, Texas 78701-2483
(512) 416-3048

Copyright©2008 Texas Department of Transportation

THIS DOCUMENT IS RELEASED FOR THE PURPOSE OF
INFORMATION ONLY
NOT FOR REGULATORY
APPROVAL, PERMITTING,
OR CONSTRUCTION.

EDCOUCH
MAINTENANCE FACILITY

HIDALGO COUNTY, EDCOUCH TEXAS
PHARR DISTRICT

Revisions

Drawn by:
AM
Project No.
--
Date
5/22/09
Sheet No.

C2.0
of X sheets

CADFILE: T:\MNTFMID02FTWCBC4704-00-83702-77-47040083\Acad\prototypical pdf\sedcouch\Acad\Civil\316 E-Topo.dwg Plotted: Tue, Aug. 11, 2009 @ 9:25 AM By: MBAZAN

A. GENERAL SITE DATA

1. PROJECT LIMITS: TxDoT, Edcouch Maintenance Facility

2. PROJECT SITE MAPS:
* Project Latitude 26° 17' 38" N Project Longitude 97° 57' 16" W
* Project Location Map: SH 107 (E. Santa Rosa Ave.), 0.375 miles East of US Llano Grande St. (Mile 3 Rd. W)
* Drainage Patterns: Shown on SW3P and Grading Plans (see Sheets C3.0 & C6.0)
* Approx. Slopes Anticipated After Major Gradings and Areas of Soil Disturbance: As shown on C6.0
* Major Controls and Locations of Stabilization Practices: As shown on SW3P Sheet (C3.0)
* Project Specific Locations: Off-site waste, borrow, or storage areas are not part of this SW3P
* Surface Waters and Discharge Locations: Shown on Grading Plan (C6.0)

3. PROJECT DESCRIPTION:
Site grading, utility installation, and asphalt pavement associated with the proposed Edcouch Maintenance Facility

4. FOR MAJOR SOIL DISTURBING ACTIVITIES SEQUENCE OF EVENTS:

1. Install controls down-slope of work area and initiate inspection and maintenance activities.
2. Begin phased construction with interim stabilization practices. Adjust erosion and sedimentation controls during construction to meet requirements and changing conditions and as directed/ approved by the Engineer.
3. Major soil disturbing activities may include but are not limited to: cut and/or fill for building footprint, final grading, trenching for utility installation, placement of topsoil and the following (if marked):

__X__ Placement of road base
____ Extensive ditch grading
____ Upgrading or replacing culverts or bridges
____ Temporary detour road(s)
____ Other:_____

5. EXISTING AND PROPOSED CONDITIONS:

Description of existing vegetative cover: Range Grass
Percentage of existing vegetative cover: 8% Vegetative cover
Existing vegetative cover: (mark one)
____ Thick or uniformly established
____ Thin and Patchy
__X__ None or minimal cover
Description of soils: Reference Geotechnical Report
Site Acreage: 5.0 acres Acreage disturbed: Approx. 2.5 acres
Site runoff coefficient (pre-construction): C=0.90 Site runoff coefficient (post-construction): C=0.90

6. RECEIVING WATERS: (Mark all that apply)

__X__ A classified stream does not pass through project.
____ A classified stream passes through project. Name: _____ Segment Number: _____
Name of receiving waters that will receive discharges ED from disturbed areas of the project: Valley Acres Reservoir

Site is in a Municipal Separate Storm Sewer System (MS4).
MS4 Operator (name): N/A

B. BEST MANAGEMENT PRACTICES

General timing or sequence for implementation of BMPs shall be as required and/or as directed/approved by the Engineer to provide adequate controls. BMPs shown on plan sheets are to be considered "proposed" unless/until install date is shown. BMPs are to reduce sediments from road construction activities.

1. SOIL STABILIZATION PRACTICES: (Select T = Temporary or P = Permanent, as applicable)

____ SEEDING
____ MULCHING (Hay or Straw)
____ BUFFER ZONES
____ PLANTING
____ COMPOST/MULCH FILTER BERM
__P__ SODDING
____ PRESERVATION OF NATURAL RESOURCES
____ FLEXIBLE CHANNEL LINER
____ RIGID CHANNEL LINER
____ SOIL RETENTION BLANKET
____ COMPOST MANUFACTURED TOPSOIL
____ OTHER: (Specify Practice)

2. STRUCTURAL PRACTICES: (Select T = Temporary or P = Permanent, as applicable)

__T__ SILT FENCES
____ HAY BALES
____ ROCK FILTER DAMS
____ DIVERSION, INTERCEPTOR, OR PERIMETER DIKES
____ DIVERSION, INTERCEPTOR, OR PERIMETER SWALES
____ DIVERSION DIKE AND SWALE COMBINATIONS
____ PIPE SLOPE DRAINS
____ PAVED FLUMES
__T__ ROCK BEDDING AT CONSTRUCTION EXIT
____ TIMBER MATTING AT CONSTRUCTION EXIT
____ CHANNEL LINERS
____ SEDIMENT TRAPS
____ SEDIMENT BASINS
____ STORM INLET SEDIMENT TRAP
____ STONE OUTLET STRUCTURES
____ CURBS AND GUTTERS
____ STORM SEWERS
____ VELOCITY CONTROL DEVICES
____ OTHER: (Specify Practice)

3. STORM WATER MANAGEMENT:

The proposed facility was designed in consideration of hydraulic design standards to convey stormwater in a manner that is protective of public safety and property. The control of erosion from the facility is inherent to the design. Additional factors affecting post-construction stormwater at the project location include: (mark all that apply)

__X__ Existing or new vegetation provides natural filtration.
____ The design includes provisions for permanent erosion controls provided by strategically placed pervious and impervious surfaces.
____ Project includes permanent sedimentation controls (other than grass).
__X__ Velocities do not require dissipation devices.
____ Velocity-dissipation devices included in the design.
____ Other : _____

4. NON-STORM WATER DISCHARGES:

Off-site discharges are prohibited except as follows:

1. Discharges from fire fighting activities and/or fire hydrant flushings.
2. Vehicle, external building, and pavement wash water where detergents and soaps are not used and where spills or leaks of toxic or hazardous materials have not occurred (unless all spilled material has been removed).
3. Plain water used to control dust.
4. Plain water originating from potable water sources.
5. Uncontaminated groundwater, spring water or accumulated stormwater.
6. Foundation or footing drains where flows are not contaminated with process materials such as solvents.
7. Other: _____

Concrete truck wash water discharges on the site should be prohibited or minimized. If allowed by the Engineer, they must be managed in a manner so as not to contaminate surface water. They must not be located in areas of concentrated flow. Concrete truck wash-out locations must be shown on the SW3P Layout and included in the inspections. Hazardous material spill/leak shall be prevented or minimized. At a minimum, this includes asphalt products, fuels, oils, lubricants, solvents, paints, acids, concrete curing compounds and chemical additives for soil stabilization. BMPs shall be implemented to the storage area of these products. All spills must be cleaned and disposed properly and reported to the Engineer. Report any release at or above the reportable quantity during a 24 hour period to the National Response Center at 1-800-424-8802.

C. OTHER REQUIREMENTS & PRACTICES

1. MAINTENANCE:
All erosion and sediment controls shall be maintained in good working order. If a repair necessary, it shall be performed before the next anticipated storm event but no later than 7 calendar days after the surrounding exposed ground has dried sufficiently to prevent further damage from equipment. If maintenance prior to the next aniticipated storm even is impracticable, maintenance must be scheduled and accomplished as soon as practicable. disturbed areas on which construction activities have ceased, temporarily or permanently, shall be stabilized within 14 calendar days unless they are scheduled to and do resume within 21 calendar days. The areas adjacent to creeks and drainageways shall have priority followed by protecting storm sewer in lets.

2. INSPECTION:
For areas of the construction site that have not been finally stabilized, areas used for storage of materials, structural control measures, and locations where vehicles enter or exit the site, personnel provided by the permitted and familiar with the SW3P must inspect disturbed areas at least once every fourteen (14) calendar days and within twenty four (24) hours of the end of a storm of 0.5 inches or greater. As an alternative to the above-described inspection schedule of once every fourteen (14) calendar days and within twenty four (24) hours of a storm of 0.5 inches or greater, the SW3P may be developed to require that these inspections will occur at least once every seven (7) calendar days. If this alternative schedule is developed, the inspection must occur on a specifically defined day, regardless of whether or not there has been rainfall since the previous inspection. An inspection and Maintenance Report shall be prepared for each inspection and the controls shall be revised on the SW3P within seven (7) calendar days following the inspection.

3. WASTE MATERIALS:
All non-hazardous municipal waste materials such as litter, rubbish, trash and garbage located on or originating from the project shall be collected and stored in a security lidded metal dumpster, provided by the Contractor. The dumpster shall be emptied as necessary or as required by local regulation and the trash shall be hauled to a permitted disposal facility. The burying of non-hazardous municipal waste on the project shall not be permitted. Construction material waste sites, stockpiles and haul roads shall be constructed to minimize and control the amount of sediment that may enter receiving waters. Construction material waste sites shall not be located in any wetland, water body or stream bed. Construction staging areas and vehicle maintenance areas shall be constructed in a manner to minimize the runoff of pollutants.

4. OFFSITE VEHICLE TRACKING:
Off-site vehicle tracking of sediments and the generation of dust must be minimized. Excess sediments on road shall be removed on a regular basis as directed/approved by the Engineer.

5. OTHER:
See the EPIC sheet for additional environmental information.

JASTER-QUINTANILLA SAN ANTONIO, LLP
CONSULTING ENGINEERS
7downs W SUNSET ROAD SAN ANTONIO, TX. 78216
210 349-9088 FAX 210 348-0146

© 2003 Texas Department of Transportation

STORM WATER POLLUTION PREVENTION PLAN (SW3P)

FED.RD. DIV.NO.	FEDERAL AID PROJECT NO.		HIGHWAY NO.
6			
STATE	DISTRICT	COUNTY	
TEXAS	LFK		
CONTROL	SECTION	JOB	SHEET NO.

Texas Department of Transportation
125 E. 11th Street
Austin, Texas 78701-2483
(512) 416-3048
Copyright © 2008 Texas Department of Transportation

THIS DOCUMENT IS RELEASED FOR THE PURPOSE OF
INFORMATION ONLY
NOT FOR REGULATORY
APPROVAL, PERMITTING,
OR CONSTRUCTION.

EDCOUCH
MAINTENANCE FACILITY
HIDALGO COUNTY, EDCOUCH TEXAS
PHARR DISTRICT

Revisions

Drawn by:
STAFF
Project No.
--
Date
5/22/09
Sheet No.
C3.1
of X sheets

CADFILE: T:\MNTFM\D02FTW\CBC4704-00-837\02-77-4704008837\Acad\prototypical pdf\sketcouch\Acad\Civil\316 SW3P DETAILS.dwg Plotted: Tue. Aug. 11, 2009 @ 3:38 PM By: MBAZAN

EROSION AND SEDIMENT CONTROL DETAILS

NOTE: THIS DRAWING WAS CREATED FOR PRODUCTION ON 22" x 34" SHEET SIZE. DO NOT SCALE PRINTS.

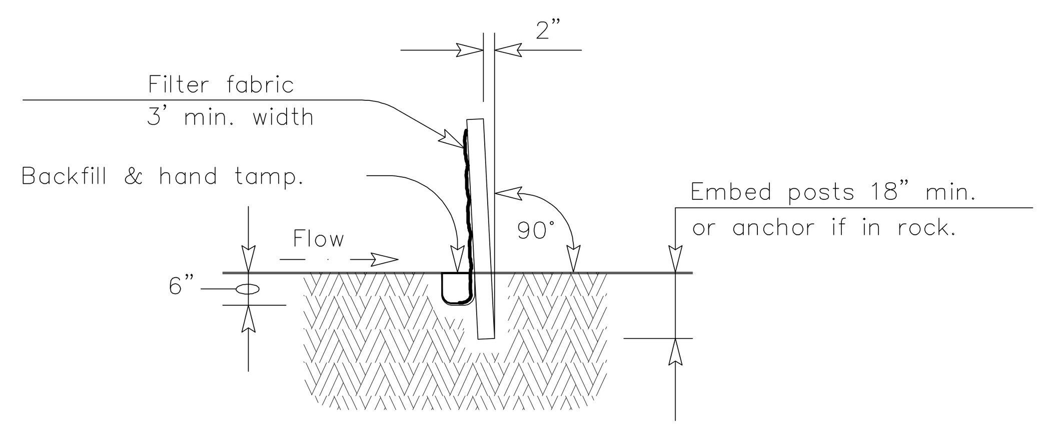

SECTION A–A

SEDIMENT CONTROL FENCE USAGE GUIDELINES

A sediment control fence may be constructed near the downstream perimeter of a disturbed area along a contour to intercept sediment from overland runoff. A 2 year storm frequency may be used to calculate the flow rate to be filtered.

Sediment control fence should be sized to filter a max. flow through rate of 100 GPM/FT^2. Sediment control fence is not recommended to control erosion from a drainage area larger than 2 acres.

PLAN SHEET LEGEND

Sediment Control Fence —(SCF)—

GENERAL NOTES

1. The guidelines shown hereon are suggestions only and may be modified by the Engineer.

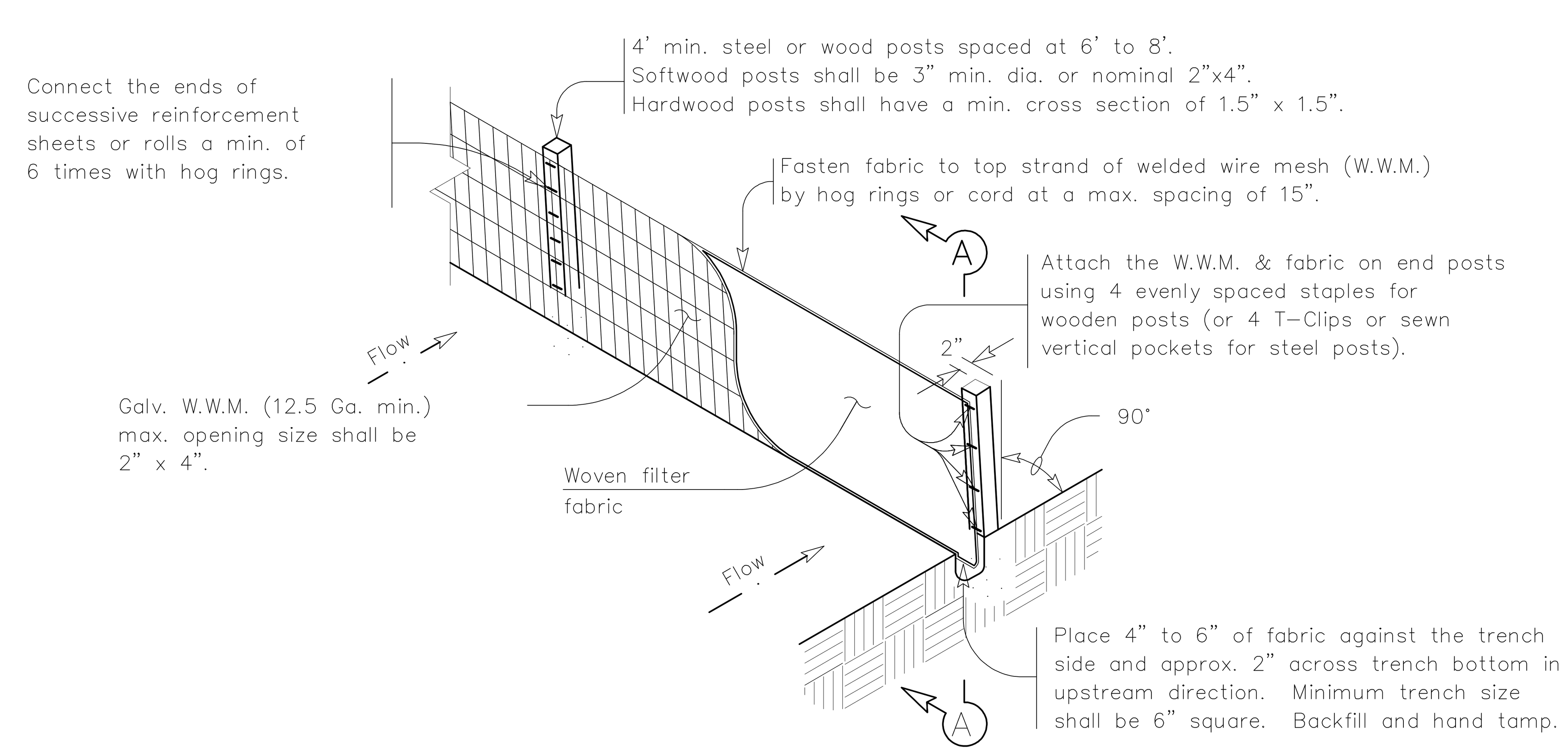

TEMPORARY SEDIMENT CONTROL FENCE

—(SCF)—

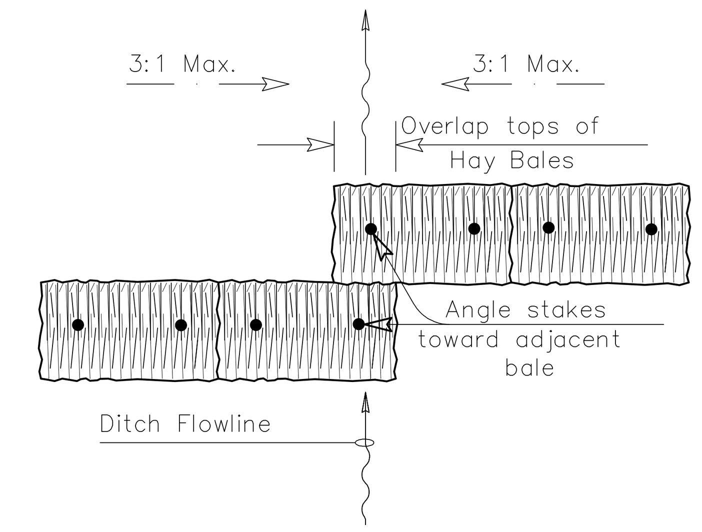

PLAN VIEW

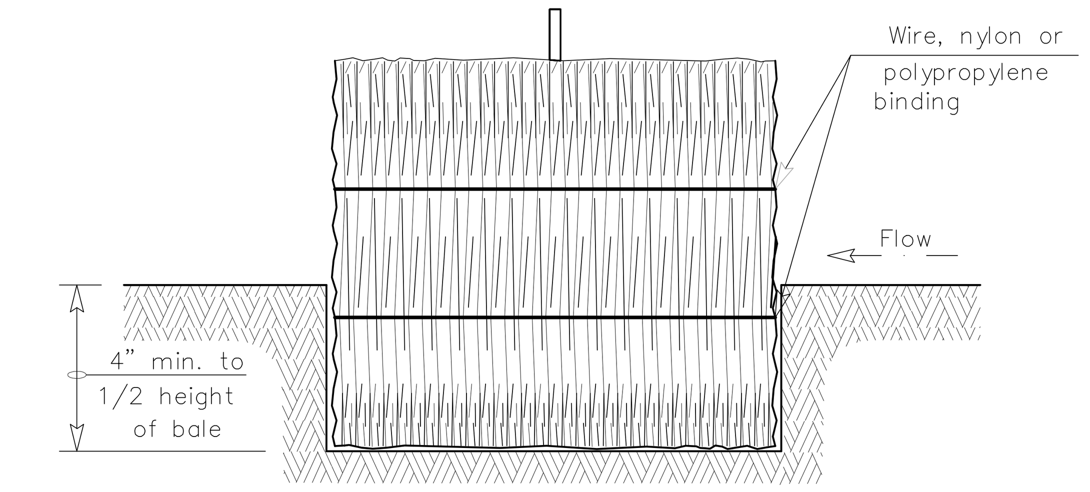

SECTION B–B

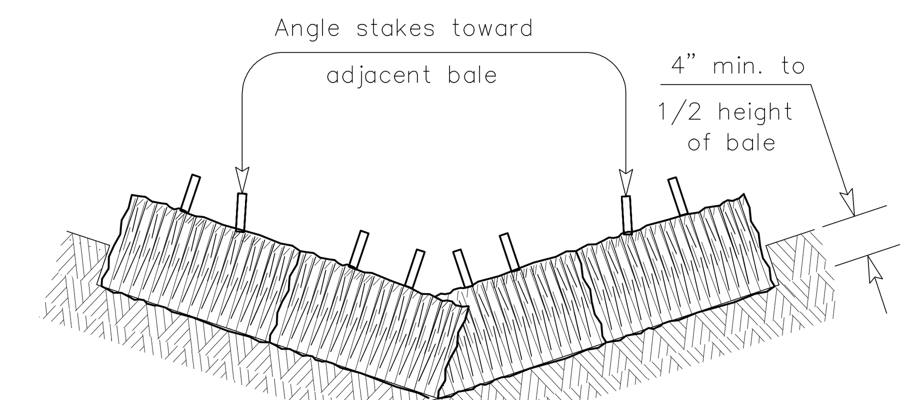

PROFILE VIEW

PLANS SHEET LEGEND

Baled Hay —(BH)—

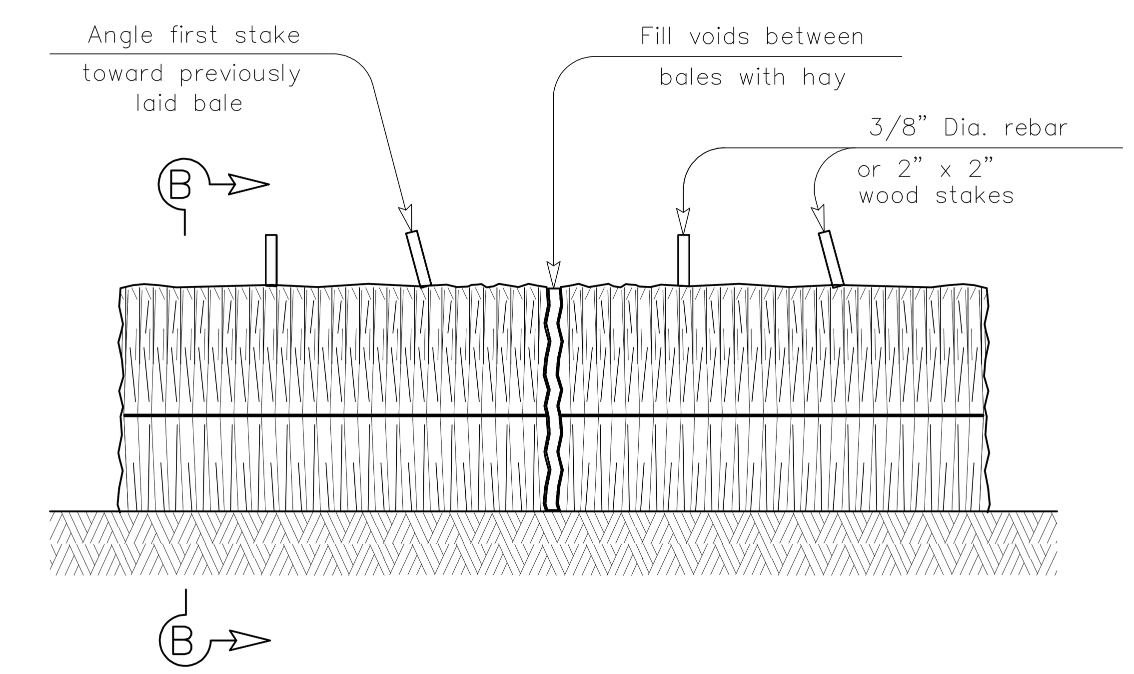

BALED HAY FOR EROSION CONTROL

—(BH)—

GENERAL NOTES

1. Hay bales shall be a minimum of 30" in length and weigh a minimum of 50 Lbs.
2. Hay bales shall be bound by either wire or nylon or polypropylene string. The bales shall be composed entirely of vegetative matter.
3. Hay bales shall be embedded in the soil a minimum of 4" and where possible 1/2 the height of the bale.
4. Hay bales shall be placed in a row with ends tightly abutting the adjacent bales. The bales shall be placed with bindings parallel to the ground.
5. Hay bales shall be securely anchored in place with 3/8" Dia. rebar or 2" x 2" wood stakes, driven through the bales. The first stake shall be angled towards the previously laid bale to force the bales together.
6. The guidelines shown hereon are suggestions only and may be modified by the Engineer.

BALED HAY USAGE GUIDELINES

A Baled Hay installation may be constructed near the downstream perimeter of a disturbed area along a contour to intercept sediment from overland runoff. A two year storm frequency may be used to calculate the flow rate to be filtered. The installation should be sized to filter a maximum flow thru rate of 5 GPM/FT^2 of cross sectional area. Baled Hay may be used at the following locations:

1. Where the runoff approaching the baled hay flows over disturbed soil for less than 100'. If the slope of the disturbed soil exceeds 10%, the length of slope upstream the baled hay should be less than 50'.
2. Where the installation will be required for less than 3 months.
3. Where the contributing drainage area is less than 1/2 acre.

For Baled Hay installations in small ditches, the additional following considerations apply:

1. The ditch sideslopes should be graded as flat as possible to maximize the drainage flowrate thru the hay.
2. The ditch should be graded large enough to contain the overtopping drainage when sediment has filled to the top of the baled hay.

Bales should be replaced usually every 2 months or more often during wet weather when loss of structural integrity is accelerated.

REVISION HISTORY

Texas Department of Transportation
Design Division (Roadway)

TEMPORARY EROSION, SEDIMENT AND WATER POLLUTION CONTROL MEASURES

FENCE & BALED HAY

EC(1)–93

FILE: EC193.DGN	DN: HEJ	CK: HEJ	DW: BGD	CK:
©TxDOT JUNE 1993	DISTRICT	FEDERAL AID PROJECT		SHEET
REVISIONS		COUNTY	CONTROL SECT JOB	HIGHWAY

DISCLAIMER: The use of this standard is governed by the "Texas Engineering Practice Act". No warranty of any kind is made by TxDOT for any purpose whatsoever. TxDOT assumes no responsibility for the conversion of this standard to other formats or for incorrect results or damages resulting from its use.

CADFILE: T:\MNTFM\D02FTW\CBC4704-00-837\02-77-470400837\Acad\prototypical pdfs\edcouch\Acad\Civil\316 SW3P DETAILS.dwg Plotted: Tue. Aug. 11, 2009 @ 3:40 PM By: MBAZAN

Texas Department of Transportation
125 E. 11th Street
Austin, Texas 78701-2483
(512) 416-3048
Copyright©2008 Texas Department of Transportation

THIS DOCUMENT IS RELEASED FOR THE PURPOSE OF INFORMATION ONLY
NOT FOR REGULATORY APPROVAL, PERMITTING, OR CONSTRUCTION.

EDCOUCH
MAINTENANCE FACILITY
HIDALGO COUNTY, EDCOUCH TEXAS
PHARR DISTRICT

Revisions

Drawn by: STAFF
Project No. --
Date 5/22/09
Sheet No.

C3.2

of x sheets

EROSION AND SEDIMENT CONTROL DETAILS

NOTE: THIS DRAWING WAS CREATED FOR PRODUCTION ON 22" x 34" SHEET SIZE. DO NOT SCALE PRINTS.

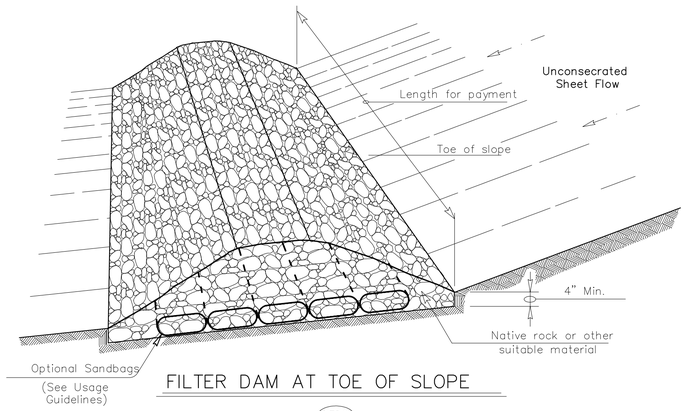

FILTER DAM AT TOE OF SLOPE

RFDT

TYPE 1

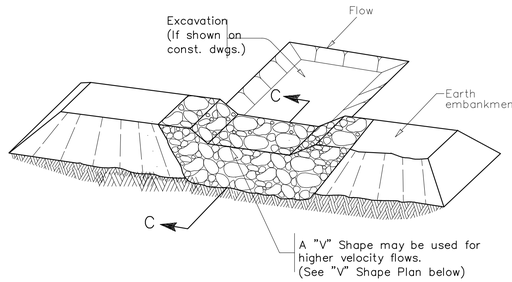

FILTER DAM AT SEDIMENT TRAP

RFDT OR RFD2

TYPE 1 OR TYPE 2

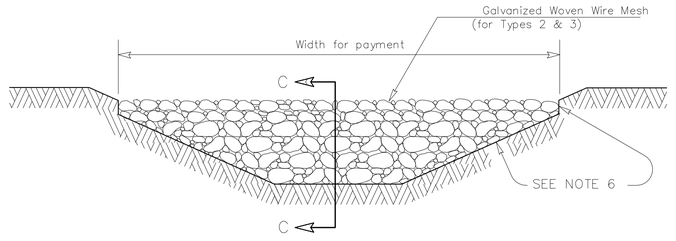

FILTER DAM AT CHANNEL SECTIONS

RFDT OR RFD2 OR RFD3

TYPE 1 OR TYPE 2

GENERAL NOTES

1. If shown on the plans or directed by the Engineer, filter dams should be placed near the toe of slopes where erosion is anticipated, upstream and/or downstream at drainage structures, and in roadway ditches and channels to collect sediment.
2. Materials (aggregate, wire mesh, sandbags, etc.) shall be as indicated by the specification for "Rock Filter Dams for Erosion and Sedimentation Control".
3. The rock filter dam dimensions shall be as indicated on the SW3P plans.
4. Side slopes should be 2:1 or flatter. Dams within the safety zone shall have sideslopes of 6:1 or flatter.
5. Maintain a minimum of 1' between top of rock filter dam weir and top of embankment for filter dams at sediment traps.
6. Filter dams should be embedded a minimum of 4" into existing ground.
7. The sediment trap for pounding of sediment laden runoff shall be of the dimensions shown on the plans.
8. Rock filter dam types 2 & 3 shall be secured with 20 gauge galvanized woven wire mesh with 1" diameter hexagonal openings. The aggregate shall be placed on the mesh to the height & slopes specified. The mesh shall be folded at the upstream side over the aggregate and tightly secured to itself on the downstream side using wire ties or hog rings. In stream use the mesh should be secured or staked to the stream bed prior to aggregate placement.
9. Sack Gabions should be staked down with 3/4" dia. rebar stakes.
10. Flow outlet should be onto a stabilized area (vegetation, rock, etc.).
11. The guidelines shown hereon are suggestions only and may be modified by the Engineer.

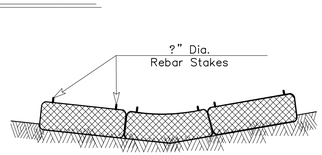

SECTION B–B

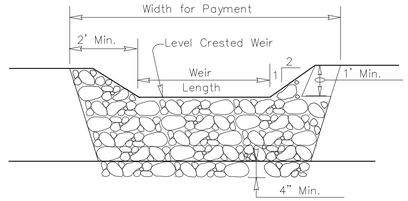

PROFILE

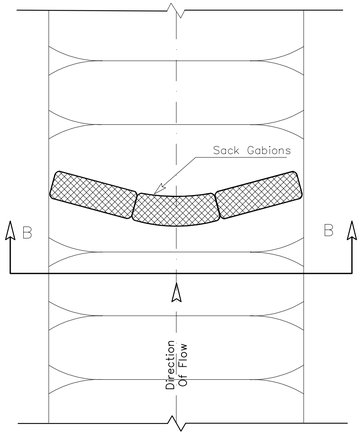

PLAN VIEW

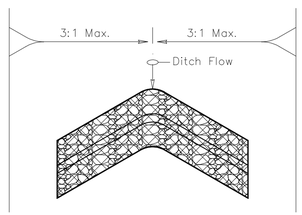

"V" SHAPE

(Plan View)

SECTION C–C

PLANS SHEET LEGEND

Type 1 Rock Filter Dam — RFDT

Type 2 Rock Filter Dam — RFD2

Type 3 Rock Filter Dam — RFD3

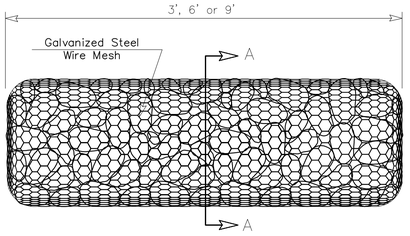

TYPE 4 (SACK GABIONS)

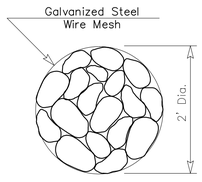

SECTION A–A

ROCK FILTER DAM USAGE GUIDELINES

Rock Filter Dams should be constructed downstream from disturbed areas to intercept sediment from overland runoff and/or concentrated flow. The dams should be sized to filter a maximum flow through rate of 60 GPM/FT of cross sectional area. A 2 year storm frequency may be used to calculate the flow rate.

Type 1 (18" high with no wire mesh): Type 1 may be used at the toe of slopes, around inlets, in small ditches, and at dike or swale outlets. This type of dam is recommended to control erosion from a drainage area of 5 acres or less. Type 1 may not be used in concentrated high velocity flows (approx. 8 Ft/Sec or more) in which aggregate wash out may occur. Sandbags may be used at the embedded foundation (4" deep min.) for better filtering efficiency of low flows if called for on the plans or directed by the Engineer.

Type 2 (18" high with wire mesh): Type 2 may be used in ditches and at dike or swale outlets.

Type 3 (36" high with wire mesh): Type 3 may be used in stream flow and should be secured to the stream bed.

Type 4 (Sack gabions): Type 4 May be used in ditches and smaller channels to form an erosion control dam.

REVISION HISTORY

Texas Department of Transportation
Design Division (Roadway)

TEMPORARY EROSION, SEDIMENT AND WATER POLLUTION CONTROL MEASURES

ROCK FILTER DAMS

EC(2)–93

FILE: EC293.DGN	DN: HEJ	CK: HEJ	DW: BGD	CK:
©TxDOT JUNE 1993	DISTRICT	FEDERAL AID PROJECT		SHEET
REVISIONS				
	COUNTY	CONTROL	SECT	JOB	HIGHWAY

LEVELS DISPLAYED

1	2	3	4	5	6	7	8	9	10	11	12	13	14	15	16	
17	18	19	20	21	22	23	24	25	26	27	28	29	30	31	32	
33	34	35	36	37	38	39	40	41	42	43	44	45	46	47	48	
49	50	51	52	53	54	55	56	57	58	59	60	61	62	63	64	

DISCLAIMER :
The use of this standard is governed by the Texas Engineering Practice Act. No warranty of any kind is made by TxDOT for any purpose whatsoever. TxDOT assumes no responsibility for the conversion of this standard to other formats or for incorrect results or damages resulting from its use.

Texas Department of Transportation
125 E. 11th Street
Austin, Texas 78701-2483
(512) 416-3048

Copyright©2008 Texas Department of Transportation

THIS DOCUMENT IS RELEASED FOR THE PURPOSE OF
INFORMATION ONLY
NOT FOR REGULATORY
APPROVAL, PERMITTING,
OR CONSTRUCTION.

EDCOUCH
MAINTENANCE FACILITY

HIDALGO COUNTY, EDCOUCH TEXAS
PHARR DISTRICT

Revisions

Drawn by:
STAFF
Project No.
--

Date
5/22/09

Sheet No.

C3.3

of X sheets

CADFILE: T:\MNTFM\DI02FTW\CBC47\04-80-837\02-77-47\040837\Acad\prototypical pdfs\edcouch\Acad\Civil\316 SW3P DETAILS.dwg Plotted: Tue. Aug. 11, 2009 @ 3:41 PM By: MBAZAN

EROSION AND SEDIMENT CONTROL DETAILS

NOTE: THIS DRAWING WAS CREATED FOR PRODUCTION ON 22" x 34" SHEET SIZE. DO NOT SCALE PRINTS.

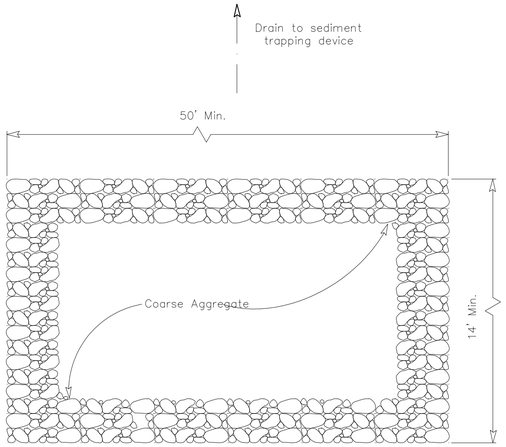

PLAN

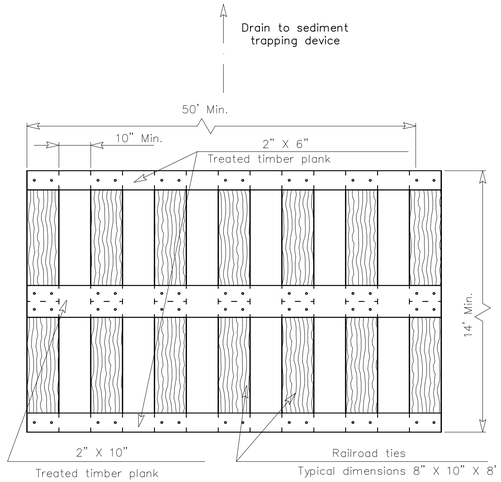

PLAN

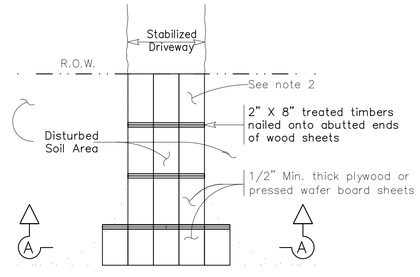

PLAN

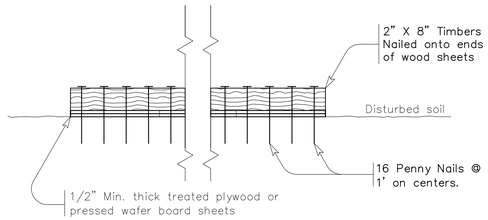

SECTION A–A

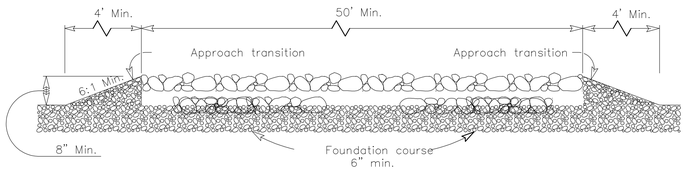

PROFILE

CONSTRUCTION EXIT (TYPE 1)

GENERAL NOTES

1. The length of the type 1 construction exit shall be as indicated on the plans, but not less than 50'.
2. The coarse aggregate should be open graded with a size of 4" to 8".
3. The approach transitions should be no steeper than 6:1 and constructed as directed by the Engineer.
4. The construction exit foundation course shall be flexible base, bituminous concrete, portland cement concrete or other material as approved by the Engineer.
5. The construction exit shall be graded to allow drainage to a sediment trapping device.
6. The guidelines shown hereon are suggestions only and may be modified by the Engineer.

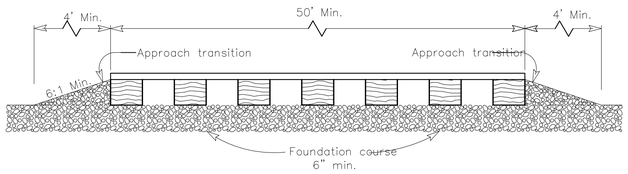

PROFILE

CONSTRUCTION EXIT (TYPE 2)

GENERAL NOTES

1. The length of the type 2 construction exit shall be as indicated on the plans, but not less than 50'.
2. The treated timber planks shall be attached to the railroad ties with 1/2"x 6" min. lag bolts. Other fasteners may be used as approved by the Engineer.
3. The treated timber planks shall be #2 grade min., and should be free from large and loose knots.
4. The approach transitions shall be no steeper than 6:1 and constructed as directed by the Engineer.
5. The construction exit foundation course shall be flexible base, bituminous concrete, portland cement concrete or other material as approved by the Engineer.
6. The construction exit should be graded to allow drainage to a sediment trapping device.
7. The guidelines shown hereon are suggestions only and may be modified by the Engineer.

CONSTRUCTION EXIT (TYPE 3)

GENERAL NOTES

1. The length of the type 3 construction exit shall be as shown on the plans, or as directed by the Engineer.
2. The type 3 construction exit may be constructed from open graded crushed stone with a size of two to four inches spread a min. of 4" thick to the limits shown on the plans.
3. The treated timber planks shall be #2 grade min., and should be free from large and loose knots.
4. The guidelines shown hereon are suggestions only and may be modified by the Engineer.

DISCLAIMER :
The use of this standard is governed by the Texas Engineering Practice Act. No warranty of any kind is made by TxDOT for any purpose whatsoever. TxDOT assumes no responsibility for the conversion of this standard to other formats or for incorrect results or damages resulting from its use.

LEVELS DISPLAYED

1	2	3	4	5	6	7	8	9	10	11	12	13	14	15	16	
17	18	19	20	21	22	23	24	25	26	27	28	29	30	31	32	
33	34	35	36	37	38	39	40	41	42	43	44	45	46	47	48	
49	50	51	52	53	54	55	56	57	58	59	60	61	62	63	64	

REVISION HISTORY

Texas Department of Transportation
Design Division (Roadway)

TEMPORARY EROSION, SEDIMENT AND WATER POLLUTION CONTROL MEASURES

CONSTRUCTION EXITS

EC(3)–93

FILE: EC393.DGN	DN: HEJ	CK: HEJ	DW: BGD	CK:	
©TxDOT JUNE 1993	DISTRICT	FEDERAL AID PROJECT			SHEET
REVISIONS					
	COUNTY		CONTROL	SECT	JOB	HIGHWAY

EROSION AND SEDIMENT CONTROL DETAILS

NOTE: THIS DRAWING WAS CREATED FOR PRODUCTION ON 22" x 34" SHEET SIZE. DO NOT SCALE PRINTS.

Texas Department of Transportation
125 E. 11th Street
Austin, Texas 78701-2483
(512) 416-3048

Copyright©2008 Texas Department of Transportation

THIS DOCUMENT IS RELEASED FOR THE PURPOSE OF
INFORMATION ONLY
NOT FOR REGULATORY
APPROVAL, PERMITTING,
OR CONSTRUCTION.

EDCOUCH
MAINTENANCE FACILITY
HIDALGO COUNTY, EDCOUCH TEXAS
PHARR DISTRICT

Revisions

Drawn by:
STAFF
Project No.
--
Date
5/22/09
Sheet No.

C3.4
of X sheets

CADFILE: T:\MNTFM\D02FTWCBC4704-00-837\02-77-4704008837\Acad\prototypical pdf\edcouch\Acadt\Civil\316 SW3P DETAILS.dwg Plotted: Tue, Aug. 11, 2009 @ 3:42 PM By: MBAZAN

Edcouch Maintenance Facility Construction Priorities List

- Contractor shall install SW3P controls prior to other construction related activities.
- Contractor shall construct new Fuel Island. New Fuel Island shall be complete, operational (including electrical power), and approved before demolition of the existing fuel island may commence. The operational fuel island must be accessible to TxDOT personnel at all times.
- Contractor shall temporarily relocate existing Truck Fill station behind the existing western Storage Shed. Work shall include all water line connections and relocation of operational equipment needed for proper use of the facility. Temporary truck fill station shall be operational and approved before demolition of the existing truck fill station may commence. Coordinate with Owner for preferred placement.
- Contractor shall demolish western Storage Shed, leaving the western-most 3 bays intact and operational.
- Contractor shall maintain power and communications to the existing Radio Tower at all times.
- Contractor shall maintain drivable access for TxDOT personnel to the existing Main Building, 3-bay Storage Shed, Truck Fill, Fuel Island, and Asphalt Emulsion Tank at all times.
- The existing Main Building and associated features/utilities shall remain in service and operational until new Maintenance Building is ready and certified for occupancy.
- Contractor shall be responsible for fulfilling any TCEQ requirements regarding the existing and new fuel tanks.
- Contractor is responsible for the phasing of this project. Contractor shall maintain close communications with the Owners designated representative regarding phasing activities. The Project Area is a working TxDOT facility and must remain so throughout construction. Interference with daily TxDOT activities due to Contractor Phasing Activities shall be kept to a minimum.

NOTE:

SITE SHALL REMAIN ACCESSIBLE TO THE OWNER AT ALL TIMES. CONTRACTOR SHALL PROVIDE A DRIVABLE SURFACE TO ALL AREAS OF THE SITE. SEE CONSTRUCTION PRIORITIES LIST THIS SHEET.

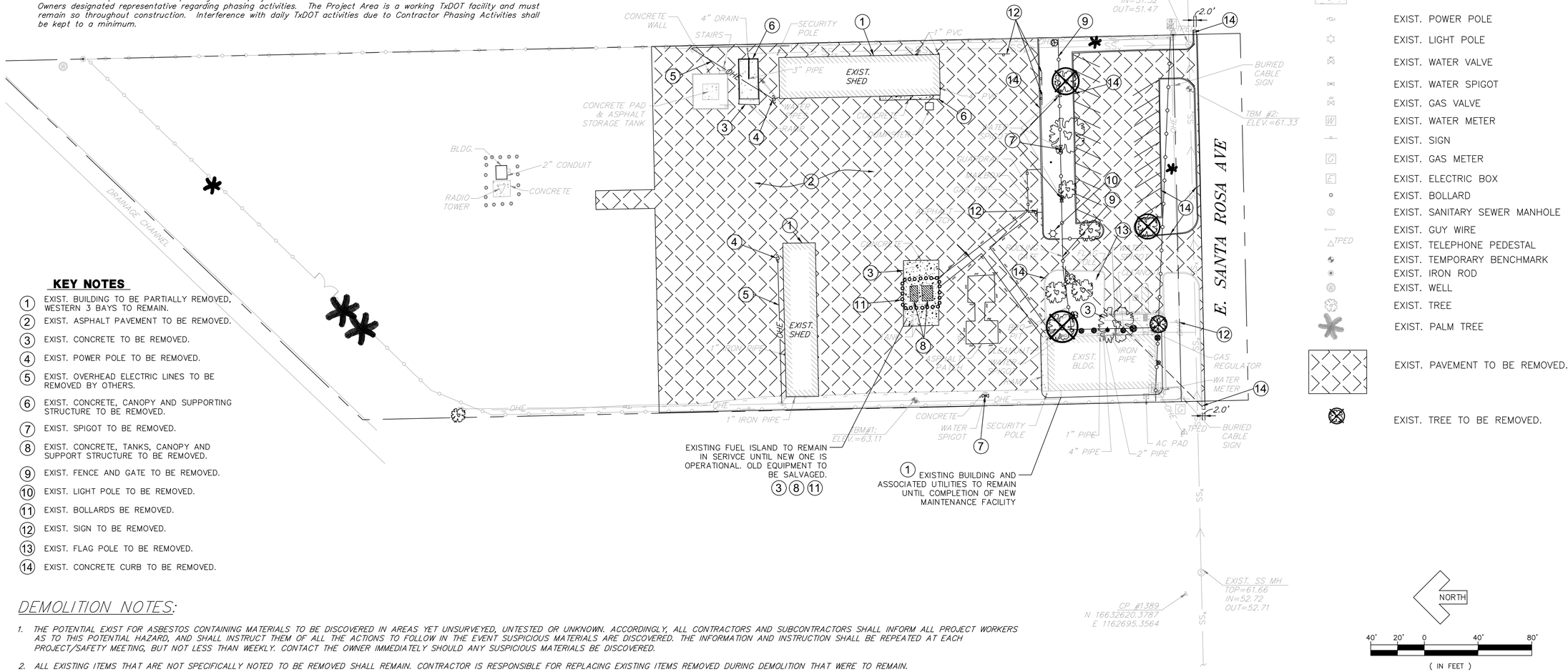

KEY NOTES

1. EXIST. BUILDING TO BE PARTIALLY REMOVED, WESTERN 3 BAYS TO REMAIN.
2. EXIST. ASPHALT PAVEMENT TO BE REMOVED.
3. EXIST. CONCRETE TO BE REMOVED.
4. EXIST. POWER POLE TO BE REMOVED.
5. EXIST. OVERHEAD ELECTRIC LINES TO BE REMOVED BY OTHERS.
6. EXIST. CONCRETE, CANOPY AND SUPPORTING STRUCTURE TO BE REMOVED.
7. EXIST. SPIGOT TO BE REMOVED.
8. EXIST. CONCRETE, TANKS, CANOPY AND SUPPORT STRUCTURE TO BE REMOVED.
9. EXIST. FENCE AND GATE TO BE REMOVED.
10. EXIST. LIGHT POLE TO BE REMOVED.
11. EXIST. BOLLARDS BE REMOVED.
12. EXIST. SIGN TO BE REMOVED.
13. EXIST. FLAG POLE TO BE REMOVED.
14. EXIST. CONCRETE CURB TO BE REMOVED.

LEGEND

- PROPERTY LINE
- EXIST. ASPHALT
- EXIST. CHAIN LINK FENCE
- EXIST. GUARDRAIL
- EXIST. OVERHEAD ELECTRIC
- EXIST. SANITARY SEWER LINE
- EXIST. CONCRETE PAD
- EXIST. POWER POLE
- EXIST. LIGHT POLE
- EXIST. WATER VALVE
- EXIST. WATER SPIGOT
- EXIST. GAS VALVE
- EXIST. WATER METER
- EXIST. SIGN
- EXIST. GAS METER
- EXIST. ELECTRIC BOX
- EXIST. BOLLARD
- EXIST. SANITARY SEWER MANHOLE
- EXIST. GUY WIRE
- EXIST. TELEPHONE PEDESTAL
- EXIST. TEMPORARY BENCHMARK
- EXIST. IRON ROD
- EXIST. WELL
- EXIST. TREE
- EXIST. PALM TREE
- EXIST. PAVEMENT TO BE REMOVED.
- EXIST. TREE TO BE REMOVED.

NORTH

40' 20' 0 40' 80'

(IN FEET)

SCALE 1" = 40'

DEMOLITION NOTES:

1. THE POTENTIAL EXIST FOR ASBESTOS CONTAINING MATERIALS TO BE DISCOVERED IN AREAS YET UNSURVEYED, UNTESTED OR UNKNOWN. ACCORDINGLY, ALL CONTRACTORS AND SUBCONTRACTORS SHALL INFORM ALL PROJECT WORKERS AS TO THIS POTENTIAL HAZARD, AND SHALL INSTRUCT THEM OF ALL THE ACTIONS TO FOLLOW IN THE EVENT SUSPICIOUS MATERIALS ARE DISCOVERED. THE INFORMATION AND INSTRUCTION SHALL BE REPEATED AT EACH PROJECT/SAFETY MEETING, BUT NOT LESS THAN WEEKLY. CONTACT THE OWNER IMMEDIATELY SHOULD ANY SUSPICIOUS MATERIALS BE DISCOVERED.
2. ALL EXISTING ITEMS THAT ARE NOT SPECIFICALLY NOTED TO BE REMOVED SHALL REMAIN. CONTRACTOR IS RESPONSIBLE FOR REPLACING EXISTING ITEMS REMOVED DURING DEMOLITION THAT WERE TO REMAIN.
3. ALL EXISTING TREES SHALL REMAIN UNLESS OTHERWISE NOTED. CONTRACTOR SHALL IMMEDIATELY NOTIFY OWNER AND ENGINEER SHOULD ANY QUESTIONS ARISE REGARDING EXISTING TREES. CONTRACTOR SHALL PROVIDE ADEQUATE PROTECTION TO PREVENT DAMAGE TO TREES OR ROOT SYSTEMS OF TREES. ANY TREES DAMAGED OR KILLED DURING CONSTRUCTION WILL BE REPLACED BY THE CONTRACTOR AT NO EXPENSE TO THE OWNER.
4. THE CONTRACTOR SHALL SAW-CUT EXISTING PAVEMENT, CURBS AND SIDEWALKS AT LOCATIONS AS SHOWN ON THE PLANS. NO JAGGED OR IRREGULAR CUTS IN PAVEMENT, CURBS OR SIDEWALKS WILL BE ALLOWED OR ACCEPTED.
5. CONTRACTOR SHALL IMMEDIATELY NOTIFY THE OWNER AND ENGINEER REGARDING ANY QUESTIONS FOR DEMOLITION WORK ON THIS PROJECT.
6. EXISTING UTILITIES SHOWN ON THIS LAYOUT ARE FROM THE BEST INFORMATION SOURCES AVAILABLE AT THE TIME OF DESIGN BUT MAY NOT REPRESENT ALL EXISTING UTILITIES ON SITE. THE CONTRACTOR NEEDS TO ALLOW FOR THE POSSIBILITY OF UNDETECTED UNDERGROUND UTILITIES. ALSO, THE CONTRACTOR MUST ALLOW FOR CHANGES DUE TO UTILITIES BEING IN LOCATIONS DIFFERENT FROM THOSE SHOWN ON THE UTILITY RECORD DRAWINGS. THE CONTRACTOR IS RESPONSIBLE FOR LOCATING AND EXPOSING CONFLICTS PRIOR TO CONSTRUCTION.
7. CONTRACTOR SHALL TAKE PRECAUTIONS WHEN EXCAVATING FOR THIS PROJECT. UTILITIES ARE KNOWN TO EXIST AROUND THE EXCAVATION SITE, HOWEVER THEIR EXACT LOCATION/ALIGNMENT, & DEPTH IS UNKNOWN. IT IS THE CONTRACTORS RESPONSIBILITY TO TAKE PRECAUTIONS WHEN LOCATING/ENCOUNTERING UNKNOWN UTILITIES.
8. CONTRACTOR SHALL PROTECT ALL EXISTING UTILITIES THAT ARE TO REMAIN DURING THE COURSE OF CONSTRUCTION. EXISTING UTILITIES WHICH ARE DAMAGED WILL BE REPLACED AT THE EXPENSE OF THE CONTRACTOR.
9. THE CONTRACTOR SHALL PREVENT DAMAGE TO ALL EQUIPMENT BEING REMOVED (SIGNS, LIGHT POLES, ETC.), AND THE CONTRACTOR SHALL COORDINATE WITH THE OWNER REGARDING THE OWNER'S PREFERENCE AS TO WHERE ALL SALVAGED MATERIAL(S) SHALL BE RELOCATED TO.
10. ALL UTILITIES THAT ARE NOT PRIVATELY OWNED SHALL REQUIRE THE UTILITY'S OWNER TO FIELD VERIFY THEIR LOCATION BEFORE EXCAVATION. THE TEXAS EXCAVATION SAFETY SYSTEM (TESS) CAN BE REACHED AT 1-800-344-8377 (1-800-DIG-TESS) OR THE TEXAS ONE CALL SYSTEM CAN BE REACHED AT http://www.texasonecall.com
11. THE CONTRACTOR SHALL BE RESPONSIBLE FOR ACQUIRING ALL PERMITS, TESTS, APPROVALS AND ACCEPTANCES REQUIRED TO COMPLETE CONSTRUCTION OF THIS PROJECT.
12. UTILITIES TO BE DEMOLISHED ARE TO BE COORDINATED WITH THE CORRESPONDING UTILITY COMPANIES.

DEMOLITION PLAN

NOTE: THIS DRAWING WAS CREATED FOR PRODUCTION ON 22" X 34" SHEET SIZE. DO NOT SCALE PRINTS.

Texas Department of Transportation
125 E. 11th Street
Austin, Texas 78701-2483
(512) 416-3048

Copyright©2008 Texas Department of Transportation

THIS DOCUMENT IS RELEASED FOR THE PURPOSE OF INFORMATION ONLY NOT FOR REGULATORY APPROVAL, PERMITTING, OR CONSTRUCTION.

EDCOUCH MAINTENANCE FACILITY
HIDALGO COUNTY, EDCOUCH TEXAS
PHARR DISTRICT

Revisions

Drawn by: BS
Project No. --
Date 5/22/09
Sheet No.

C4.0
of X sheets

CADFILE: T:\MNTFMD02FTWCBC4704-00-837\02-77-4704008837\Acad\prototypical pdfs\edcouch\Acad\Civil\316 Demo Plan.dwg Plotted: Tue. Aug. 11, 2009 @ 9:08 AM By: MBAZAN

Edcouch Maintenance Facility Construction Priorities List

- *Contractor shall install SW3P controls prior to other construction related activities.*
- *Contractor shall construct new Fuel Island. New Fuel Island shall be complete, operational (including electrical power), and approved before demolition of the existing fuel island may commence. The operational fuel island must be accessible to TxDOT personnel at all times.*
- *Contractor shall temporarily relocate existing Truck Fill station behind the existing western Storage Shed. Work shall include all water line connections and relocation of operational equipment needed for proper use of the facility. Temporary truck fill station shall be operational and approved before demolition of the existing truck fill station may commence. Coordinate with Owner for preferred placement.*
- *Contractor shall demolish western Storage Shed, leaving the western-most 3 bays intact and operational.*
- *Contractor shall maintain power and communications to the existing Radio Tower at all times.*
- *Contractor shall maintain drivable access for TxDOT personnel to the existing Main Building, 3-bay Storage Shed, Truck Fill, Fuel Island, and Asphalt Emulsion Tank at all times.*
- *The existing Main Building and associated features/utilities shall remain in service and operational until new Maintenance Building is ready and certified for occupancy.*
- *Contractor shall be responsible for fulfilling any TCEQ requirements regarding the existing and new fuel tanks.*
- *Contractor is responsible for the phasing of this project. Contractor shall maintain close communications with the Owners designated representative regarding phasing activities. The Project Area is a working TxDOT facility and must remain so throughout construction. Interference with daily TxDOT activities due to Contractor Phasing Activities shall be kept to a minimum.*

NOTE:

SITE SHALL REMAIN ACCESSIBLE TO THE OWNER AT ALL TIMES. CONTRACTOR SHALL PROVIDE A DRIVABLE SURFACE TO ALL AREAS OF THE SITE. SEE CONSTRUCTION PRIORITIES LIST THIS SHEET.

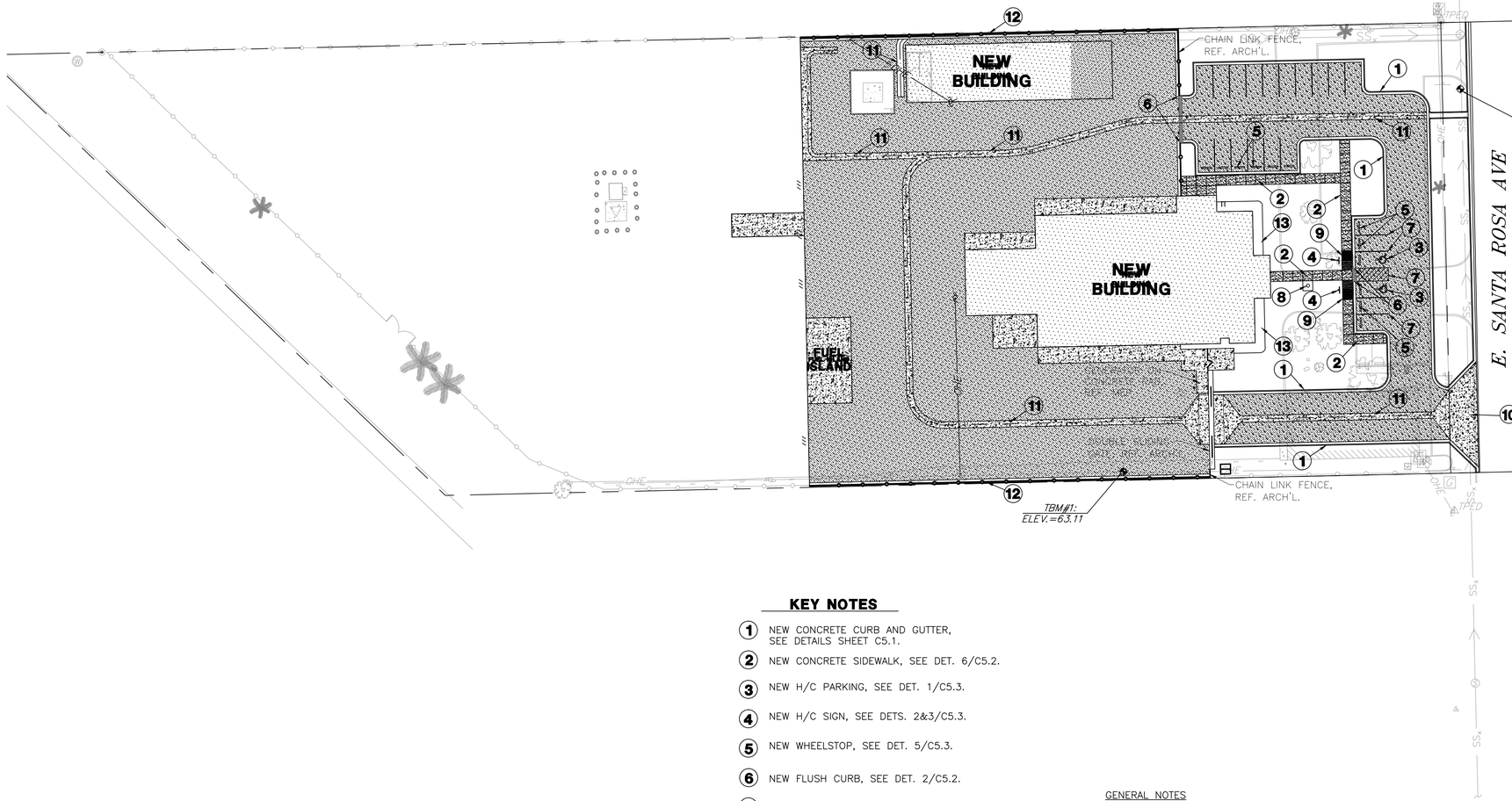

KEY NOTES

1. NEW CONCRETE CURB AND GUTTER, SEE DETAILS SHEET C5.1.
2. NEW CONCRETE SIDEWALK, SEE DET. 6/C5.2.
3. NEW H/C PARKING, SEE DET. 1/C5.3.
4. NEW H/C SIGN, SEE DETS. 2&3/C5.3.
5. NEW WHEELSTOP, SEE DET. 5/C5.3.
6. NEW FLUSH CURB, SEE DET. 2/C5.2.
7. NEW PARKING STRIPING, 4" WIDE WHITE STRIPE, TYP.
8. NEW FLAG POLE, REF, ARCH'L.
9. NEW RAMP, SEE DET. 2/C5.4.
10. NEW CONCRETE DRIVEWAY, SEE DET. 1/C5.4.
11. NEW 4' WIDE CONCRETE PILOT CHANNEL SEE DET. 4/C5.2.
12. NEW CONCRETE CURB WITH FENCE SEE DET. 2/C5.1.
13. NEW LANDSCAPING BED AREA, REF, ARCH'L

LEGEND

- PROPERTY LINE
- EXIST. ASPHALT
- EXIST. CHAIN LINK FENCE
- EXIST. GUARDRAIL
- EXIST. OVERHEAD ELECTRIC
- EXIST. CONCRETE
- EXIST. SIDEWALK
- EXIST. POWER POLE
- EXIST. LIGHT POLE
- EXIST. WATER VALVE
- EXIST. GAS VALVE
- EXIST. WATER METER
- EXIST. SIGN
- EXIST. GAS METER
- EXIST. ELECTRIC BOX
- EXIST. BOLLARD
- EXIST. GUY WIRE
- EXIST. TELEPHONE PEDESTAL
- EXIST. TEMPORARY BENCHMARK
- EXIST. IRON ROD
- EXIST. WELL
- EXIST. TREE
- EXIST. PALM TREE
- NEW CONCRETE FLATWORK SEE DETAIL 5/C5.2
- NEW CONCRETE PAVEMENT, REF STRUCTURAL
- NEW ASPHALT PAVEMENT, SEE DETAIL 4/C5.2.
- NEW FENCE, REF. ARCH'L.
- NEW EDGE OF ASPHALT PAVEMENT

NORTH

40' 20' 0 40' 80'

(IN FEET)

SCALE 1" = 40'

GENERAL NOTES

1. CONTRACTOR SHALL IMMEDIATELY NOTIFY THE ENGINEER OF ANY QUESTIONS THAT MAY ARISE CONCERNING THE INTENT, PLACEMENT, OR LIMITS OF DIMENSIONS OR GRADES NECESSARY FOR CONSTRUCTION OF THIS PROJECT.
2. SEE DETAIL SHEETS FOR ALL APPLICABLE DETAILS.
3. THE CONTRACTOR SHALL BE RESPONSIBLE FOR FURNISHING AND MAINTAINING ALL SIGNS, BARRICADES, AND LIGHTING OR WARNING DEVICE(S) USED/REQUIRED WITH THIS WORK.
4. THE CONTRACTOR SHALL BE RESPONSIBLE FOR ACQUIRING ALL NECESSARY PERMITS BEFORE BEGINNING CONSTRUCTION.
5. THE CONTRACTOR SHALL BE RESONSIBLE FOR ALL SOILS TESTING AND SHALL BE SUPPLIED AT HIS/HER EXPENSE.
6. CONTRACTOR IS RESPONSIBLE FOR CONSTRUCTION STAKING.

SITE PLAN

NOTE: THIS DRAWING WAS CREATED FOR PRODUCTION ON 22" X 34" SHEET SIZE. DO NOT SCALE PRINTS.

Texas Department of Transportation
125 E. 11th Street
Austin, Texas 78701-2483
(512) 416-3048

Copyright©2008 Texas Department of Transportation

THIS DOCUMENT IS RELEASED FOR THE PURPOSE OF
INFORMATION ONLY
NOT FOR REGULATORY
APPROVAL, PERMITTING,
OR CONSTRUCTION.

EDCOUCH
MAINTENANCE FACILITY

HIDALGO COUNTY, EDCOUCH TEXAS
PHARR DISTRICT

Revisions

Drawn by:
BS
Project No.
--
Date
5/22/09
Sheet No.

C5.0
of X sheets

CADFILE: T:\MNTFM\002FTW\CBC4704-00-837\02-77-4704008837\Acad\prototypical pdf\sedcouch\Acad\Civil\316 Site Plan.dwg Plotted: Tue, Aug 11, 2009 @ 9:39 AM By: MBAZAN

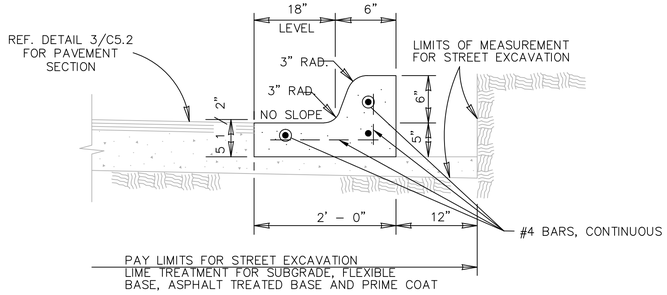

1 TYPICAL CURB & GUTTER DETAIL

N.T.S.

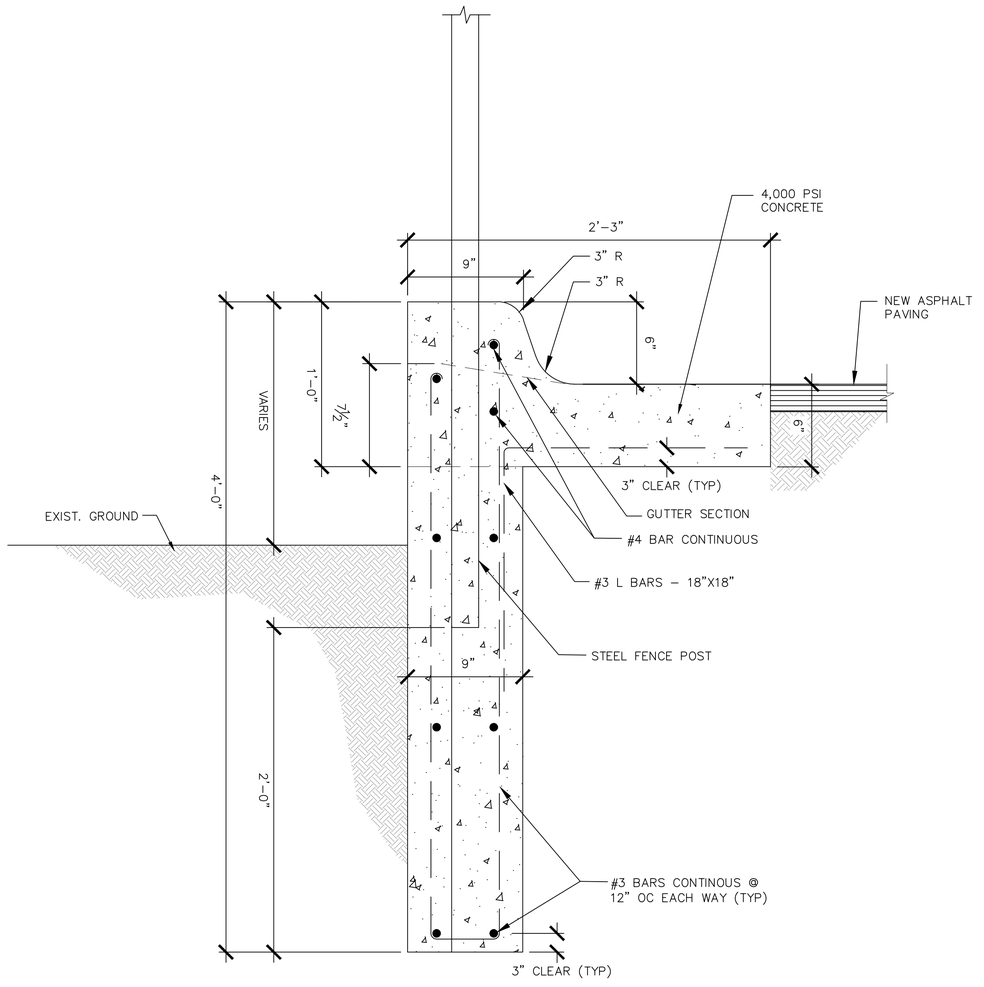

2 CURB WITH FENCE POST

N.T.S.

CIVIL DETAILS

NOTE: THIS DRAWING WAS CREATED FOR PRODUCTION ON 22" X 34" SHEET SIZE. DO NOT SCALE PRINTS.

Texas Department of Transportation
125 E. 11th Street
Austin, Texas 78701-2483
(512) 416-3048

Copyright©2008 Texas Department of Transportation

THIS DOCUMENT IS RELEASED FOR THE PURPOSE OF
INFORMATION ONLY
NOT FOR REGULATORY
APPROVAL, PERMITTING,
OR CONSTRUCTION.

EDCOUCH
MAINTENANCE FACILITY

HIDALGO COUNTY, EDCOUCH TEXAS
PHARR DISTRICT

Revisions

Drawn by:
STAFF
Project No.
--
Date
5/22/09
Sheet No.

C5.1
of X sheets

CADFILE: T:\MNTFM\D02FTWCBC4704-00-837\02-77-47040083?\Acad\prototypical pdf\tedcouch\Acad\Civil\316 CIVIL DETAILS.dwg Plotted: Tue. Aug. 11, 2009 @ 8:52 AM By: MBAZAN

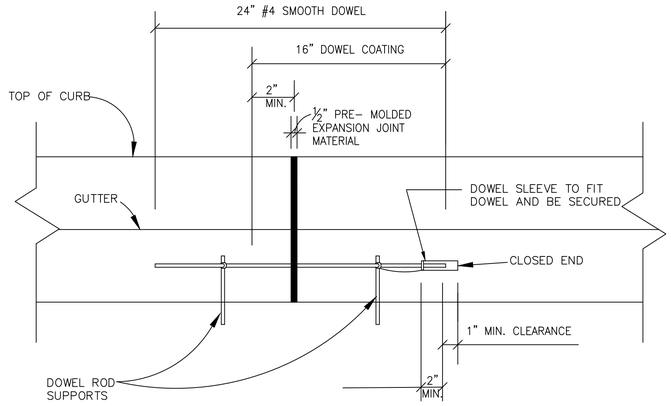

EXPANSION JOINTS SHALL OCCUR @ 40' INTERVALS.

1 CURB EXPANSION JOINT DOWEL DETAIL

N.T.S.

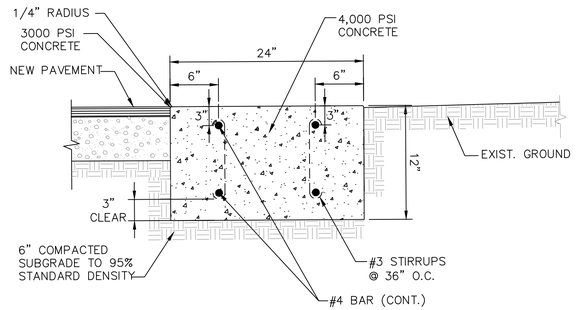

2 FLUSH CURB DETAIL

N.T.S.

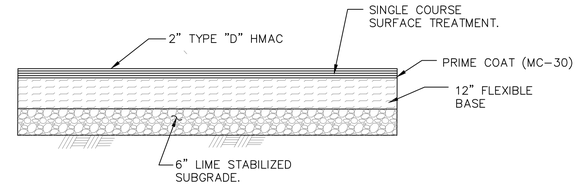

SUBGRADE TREATMENT:	3% LIME (HYDRATED OR LIME SLURRY)
FLEXIBLE BASE:	TYPE E, GRADE 4 (CALICHE)
PRIME COAT:	TYPE MC–30, APPLICATION RATE 0.2 GAL/SY
SURFACE TREATMENT:	
AGGREGATE:	TYPE B, GRADE 4, APPLICATION RATE 1 CY/120 SY
ASPHALT:	TYPE AC–10 OR HFRS–2P, APPLICATION RATE 0.4 GAL/SY
PAVEMENT SURFACE:	2" HMAC (PG76–22)

3 FLEXIBLE BASE PAVEMENT SECTION

N.T.S.

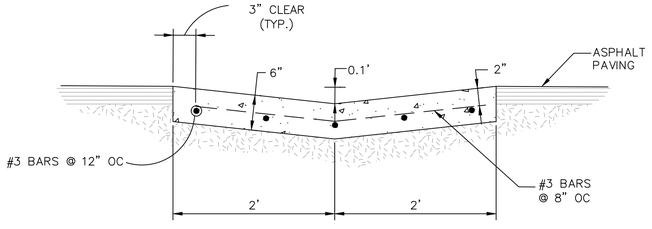

PROVIDE CONTROL JOINTS AT 10 FEET SPACEING, SEE DETAIL 7, THIS SHEET

4 CONCRETE PILOT CHANNEL

N.T.S.

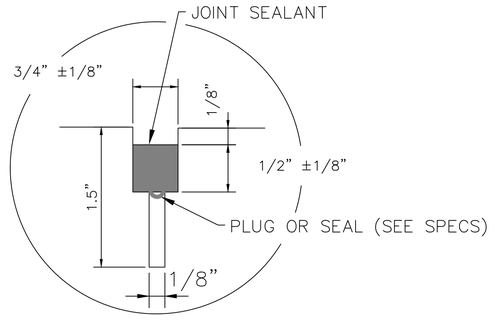

5 CONTROL JOINT DETAIL

N.T.S.

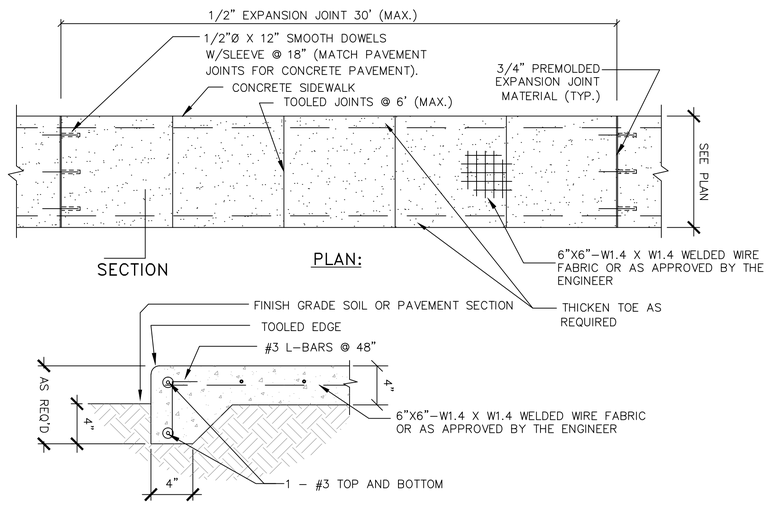

SECTION:

6 STANDARD SIDEWALK DETAIL

N.T.S.

REVISIONS

#	DATE	REVISION
1	6/9/2009	REVISED FLEXIBLE BASE PAVEMENT SECTION

CIVIL DETAILS

Texas Department of Transportation
125 E. 11th Street
Austin, Texas 78701-2483
(512) 416-3048

Copyright©2008 Texas Department of Transportation

THIS DOCUMENT IS RELEASED FOR THE PURPOSE OF INFORMATION ONLY NOT FOR REGULATORY APPROVAL, PERMITTING, OR CONSTRUCTION.

EDCOUCH MAINTENANCE FACILITY

HIDALGO COUNTY, EDCOUCH TEXAS
PHARR DISTRICT

Revisions
1 5/8/2009

Drawn by:
STAFF
Project No.
--

Date
5/22/09
Sheet No.

C5.2
of X sheets

CADFILE: T:\MNTFMID02FTW\CBC4704-00-837\02-77-4704008837\Acad\prototypical pdf\edcouch\Acad\Civil\316 CIVIL DETAILS.dwg Plotted: Tue. Aug. 11, 2009 @ 8:58 AM By: MBAZAN

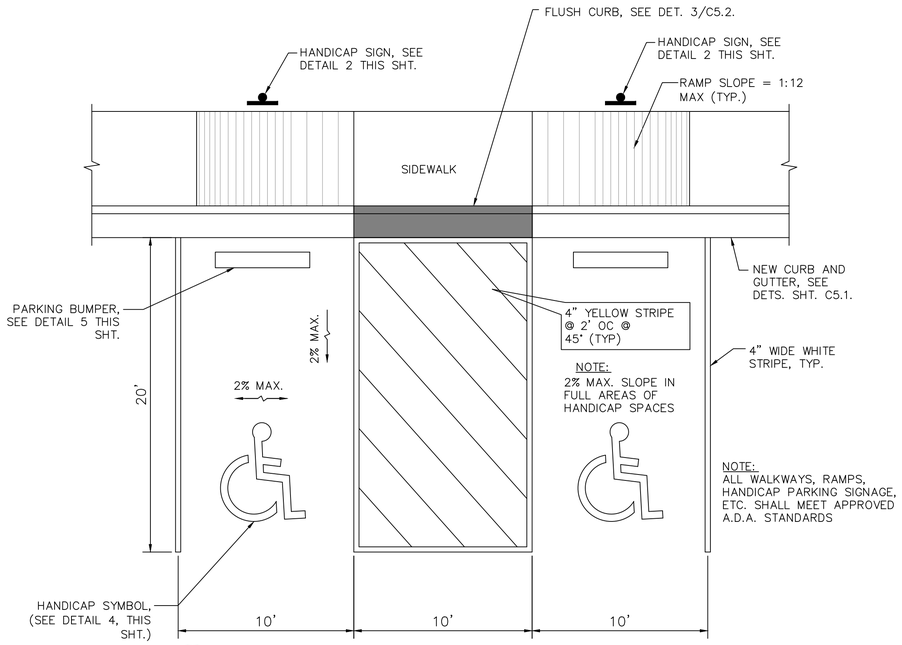

1 HANDICAP PARKING/RAMP DETAIL

N.T.S.

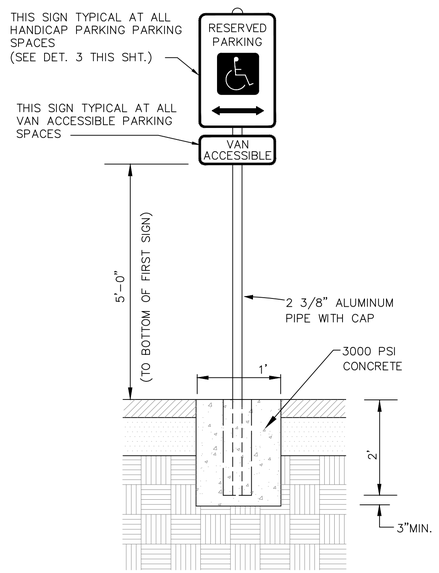

2 HANDICAP SIGN ASSEMBLY

N.T.S.

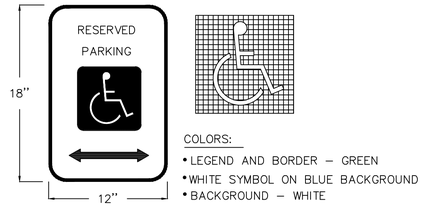

3 HANDICAP SIGN

N.T.S.

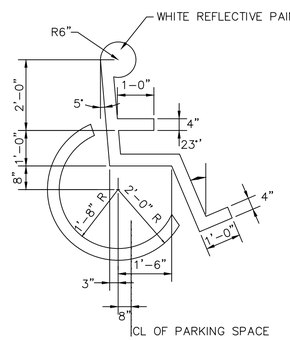

4 INTERNATIONAL HANDICAP SYMBOL

N.T.S.

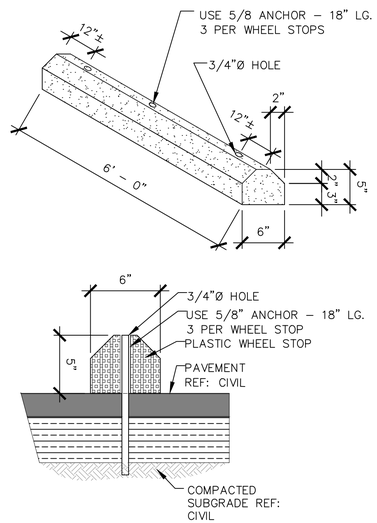

5 PARKING BUMPER DETAIL

N.T.S.

Texas Department of Transportation
125 E. 11th Street
Austin, Texas 78701-2483
(512) 416-3048

Copyright©2008 Texas Department of Transportation

THIS DOCUMENT IS RELEASED FOR THE PURPOSE OF
INFORMATION ONLY
NOT FOR REGULATORY APPROVAL, PERMITTING, OR CONSTRUCTION.

EDCOUCH
MAINTENANCE FACILITY

HIDALGO COUNTY, EDCOUCH TEXAS
PHARR DISTRICT

Revisions

Drawn by:
STAFF
Project No.
--
Date
5/22/09
Sheet No.

C5.3
of X sheets

CIVIL DETAILS

NOTE: THIS DRAWING WAS CREATED FOR PRODUCTION ON 22" X 34" SHEET SIZE. DO NOT SCALE PRINTS.

CADFILE: T:\MNTFM\D02FTWCBC4704-00-837\02-77-4704008837\Acad\prototypical pdf\tedcouch\Acad\Civil\316 CIVIL DETAILS.dwg Plotted: Tue. Aug. 11, 2009 @ 8:53 AM By: MBAZAN

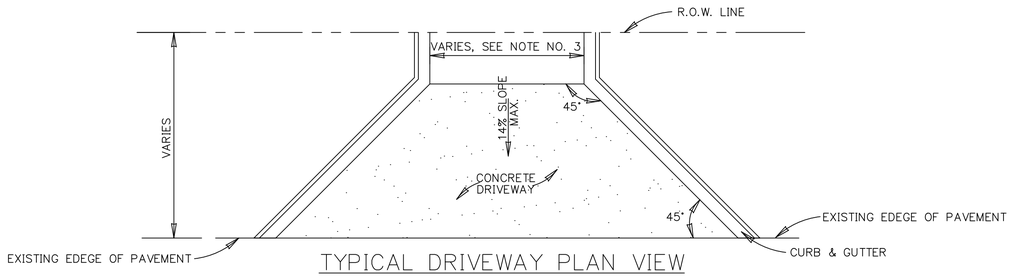

TYPICAL DRIVEWAY PLAN VIEW

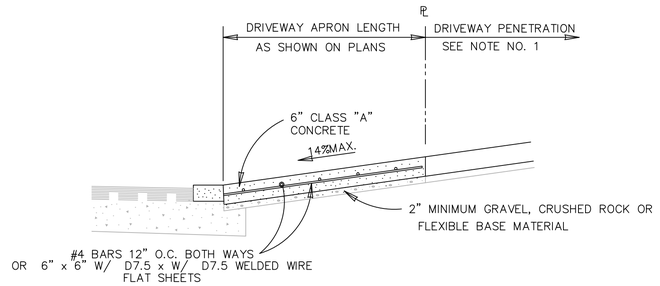

TYPICAL COMMERCIAL DRIVEWAY SECTION

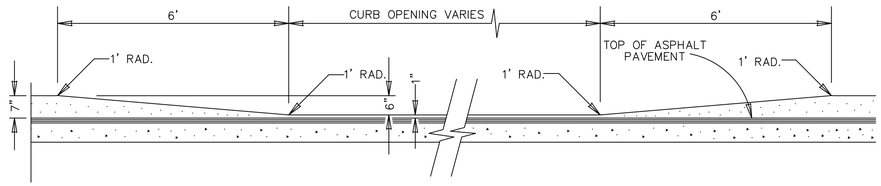

CURB PROFILE @ CONCRETE DRIVEWAY

CONCRETE DRIVEWAY NOTES

1. DRIVEWAY PENETRATION REFERS TO A PORTION OF THE DRIVEWAY THAT MAY BE NECESSARY TO RECONSTRUCT WITHIN PRIVATE PROPERTY TO COMPLY WITH A MAXIMUM DRIVEWAY SLOPE. THIS PORTION OF THE DRIVEWAY SHALL BE PAID FOR UNDER THE FOLLOWING ITEMS AS MAY APPLY:

   A.) CONCRETE DRIVEWAY PAID FOR UNDER ITEM NO. 360
   B.) ASPHALTIC CONCRETE DRIVEWAY PAID FOR UNDER ITEM NO. 300. 1" ASPHALT TYPE 'D' & 6" FLEXIBLE BASE

2. 7" MINIMUM HEIGHT WILL NOT NECESSARILY OCCUR AT THE PROPERTY LINE. IT MAY OCCUR WITHIN THE RIGHT OF WAY OR WITHIN THE DRIVEWAY PENETRATION ON PRIVATE PROPERTY.

3. PROPOSED DRIVEWAYS ARE TO MATCH EXISTING SIZES BUT ARE NOT TO EXCEED 30' AT THE PROPERTY LINE, UNLESS AUTHORIZED BY THE ENGINEER.

4. FOR LOCATION OF THE PROPOSED SIDEWALK SEE PLANS. FOR LOCAL TYPE "A" STREETS, SIDEWALK SHALL BE A MINIMUM OF 4' WIDE AND IF SEPARATED FROM THE CURB, THE SIDEWALK SHALL BE LOCATED A MINIMUM OF 2' FROM THE BACK OF CURB. FOR OTHER THAN LOCAL TYPE "A" STREETS, THE SIDEWALK SHALL BE A MINIMUM OF 4' WIDE AND SEPARATED A MINIMUM OF 2' FROM THE BACK OF CURB OR AS AN OPTION, THE SIDEWALK SHALL BE A MINIMUM OF 6' WIDE WHEN LOCATED AT THE BACK OF CURB.

NOTE: FOR ITEM NUMBERS REFER TO TxDOT STANDARDS.

1 CONCRETE DRIVEWAY DETAILS

N.T.S.

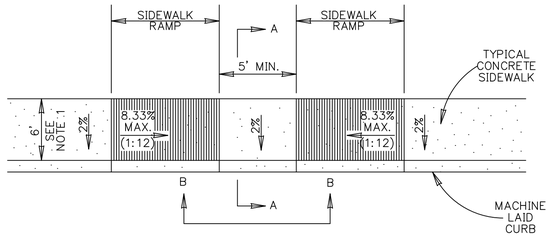

TYPICAL SIDEWALK RAMP – TYPE II

USED AT TEE INTERSECTIONS WHERE SIDEWALK ABUTS CURB

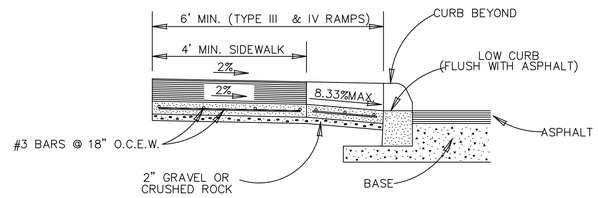

SECTION A–A

TYPE I, II, III, IV & V RAMPS(SEE NOTE 7)		
GUTTER SLOPE	SIDEWALK RAMP LGTH.(1:12)	
	LOW SIDE	HIGH SIDE
1%	5'–6"	7'–2"
2%	5'–0"	8'–4"
3%	4'–6"	10'–0"
4%	4'–2"	12'–6"
5%	3'–10"	16'–8"

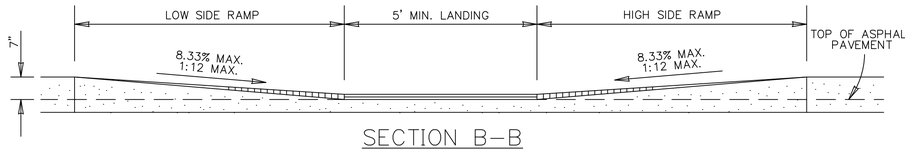

SECTION B–B

CURB PROFILE WHERE SIDEWALK ABUTS CURB

GENERAL NOTES

1. FOR LOCAL TYPE "A" STREETS, SIDEWALKS SHALL HAVE A MINIMUM UNOBSTRUCTED WIDTH OF 4' AND IF SEPARATED FROM THE CURB, THE SIDEWALK SHALL BE LOCATED A MINIMUM OF 2' FROM THE BACK OF CURB. FOR OTHER THAN LOCAL TYPE "A" STREETS, SIDEWALKS SHALL HAVE A MINIMUM UNOBSTRUCTED WIDTH OF 4' AND SEPARATED A MINIMUM OF 2' FROM THE BACK OF CURB OR AS AN OPTION, THE SIDEWALK SHALL HAVE A MINIMUM WIDTH OF 6' WHEN LOCATED AT THE BACK OF CURB.

2. SIDEWALK RAMP LENGTHS PRESENTED IN TABLE 1 ARE GUIDELINES ONLY. SIDEWALK RAMP LENGTHS SHALL BE OF SUFFICIENT LENGTH TO MAINTAIN 8.33% (1:12) MAXIMUM SLOPE.

3. ALL RAMPS SHALL CONTRAST VISUALLY WITH ADJOINING SURFACES, EITHER LIGHT–ON–DARK OR DARK–ON–LIGHT. THE MATERIAL USED TO PROVIDE CONTRAST SHALL BE AN INTEGRAL PART OF THE WALKING SURFACE.

4. SIDEWALK RAMP TYPE V SHALL BE USED ONLY WHERE THERE IS SIGNIFICANT RESTRICTION WITHIN THE PARKWAY TO CONSTRUCT TYPE I OR TYPE III RAMPS.

5. RAMP SURFACE SHALL BE BRUSH FINISHED AND GROOVED.

6. THESE DETAILS ARE FOR REFERENCE ONLY. ACTUAL LOCATIONS OF WHEELCHAIR RAMPS TO BE SHOWN ON CONSTRUCTION PLANS. CITY CONSTRUCTION INSPECTOR CAN ADJUST LOCATIONS FOR SAFETY OR UTILITY CLEARANCE.

7. SIDEWALKS LESS THAN 5 FEET IN WIDTH SHALL BE PROVIDED WITH A PASSING SPACE AT A MAXIMUM SPACING OF 200 FEET.

8. WHEELCHAIR RAMP SHALL BE CONSTRUCTED WITH 4" 4,000 PSI CONCRETE AND 2" GRAVEL OR CRUSHED ROCK.

9. REINFORCING STEEL SHALL BE #3 BARS AT 18" O.C.E.W. OR 6" x 6" – W2.9 x W2.9.

10. WHEELCHAIR AND SIDEWALK RAMP GROOVES SHALL BE 1/4" DEEP, 3/4" WIDE AND 2" APART.

11. LANDINGS SHALL HAVE A MAXIMUM SLOPE OF 2% IN ANY DIRECTION.

NOTE: FOR ITEM NUMBERS REFER TO TxDOT STANDARDS.

2 WHEELCHAIR RAMP

N.T.S.

CIVIL DETAILS

NOTE: THIS DRAWING WAS CREATED FOR PRODUCTION ON 22" X 34" SHEET SIZE. DO NOT SCALE PRINTS.

Texas Department of Transportation
125 E. 11th Street
Austin, Texas 78701-2483
(512) 416-3048

Copyright©2008 Texas Department of Transportation

THIS DOCUMENT IS RELEASED FOR THE PURPOSE OF INFORMATION ONLY NOT FOR REGULATORY APPROVAL, PERMITTING, OR CONSTRUCTION.

EDCOUCH MAINTENANCE FACILITY

HIDALGO COUNTY, EDCOUCH TEXAS
PHARR DISTRICT

Revisions

Drawn by: STAFF
Project No. --
Date 5/22/09
Sheet No.

C5.4
of X sheets

CADFILE: T:\MNTFM\D02FTW\CBC4704-00-837\02-77-4704008837\Acad\prototypical pdfs\stdcouch\Acad\Civil\316 CIVIL DETAILS.dwg Plotted: Tue, Aug. 11, 2009 @ 8:54 AM By: MBAZAN

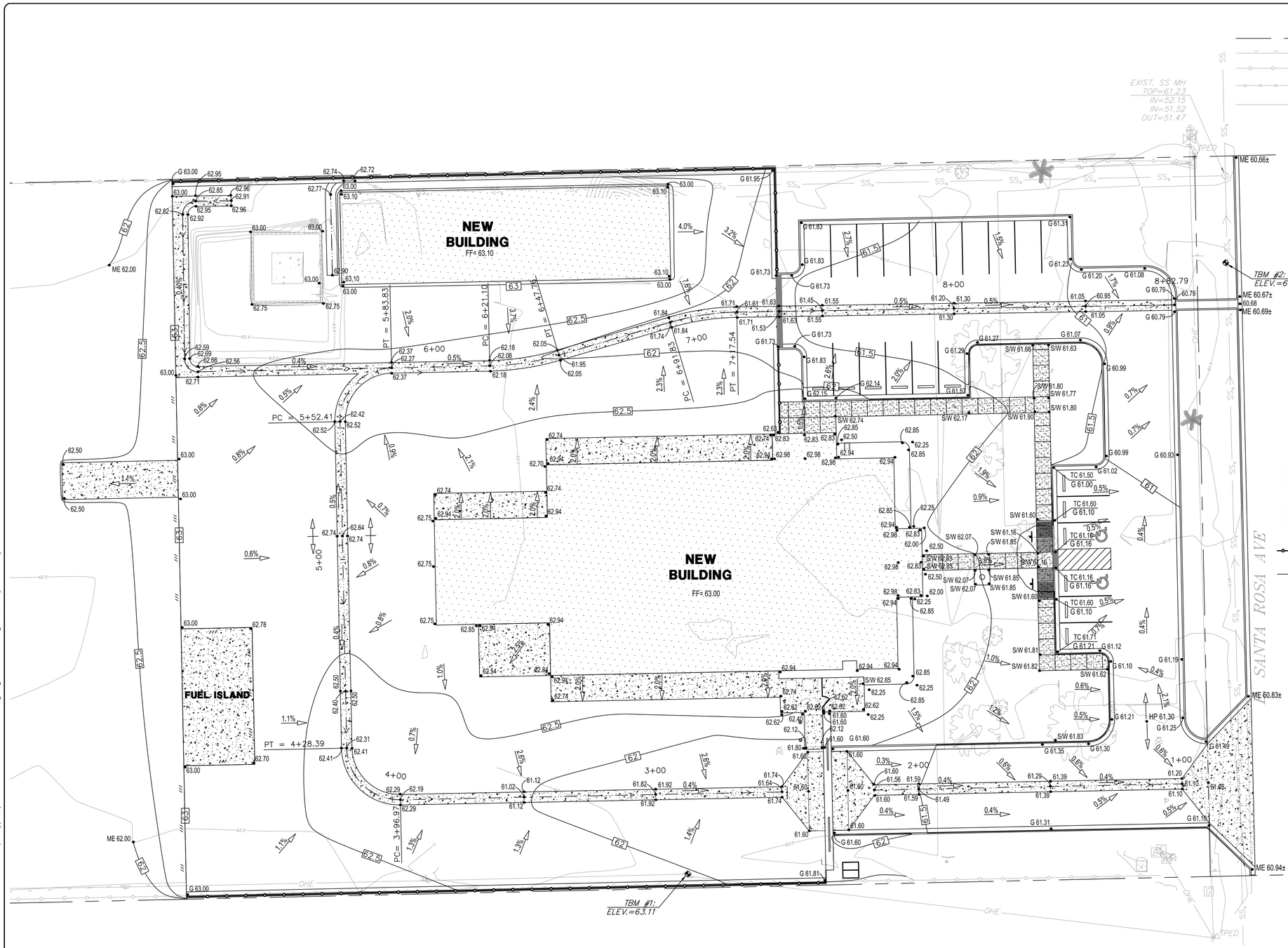

LEGEND

- PROPERTY LINE
- EXIST. ASPHALT
- EXIST. CHAIN LINK FENCE
- EXIST. GUARDRAIL
- EXIST. OVERHEAD ELECTRIC
- EXIST. CONCRETE
- EXIST. SIDEWALK
- EXIST. POWER POLE
- EXIST. LIGHT POLE
- EXIST. WATER VALVE
- EXIST. GAS VALVE
- EXIST. WATER METER
- EXIST. SIGN
- EXIST. GAS METER
- EXIST. ELECTRIC BOX
- EXIST. BOLLARD
- EXIST. GUY WIRE
- EXIST. TELEPHONE PEDESTAL
- EXIST. TEMPORARY BENCHMARK
- EXIST. IRON ROD
- EXIST. WELL
- EXIST. TREE
- EXIST. PALM TREE
- NEW CONCRETE FLATWORK SEE DETAIL 5/C5.2
- NEW CONCRETE PAVEMENT, REF STRUCTURAL
- NEW FENCE, REF. ARCH'L.
- NEW EDGE OF ASPHALT PAVEMENT
- NEW TOP OF CURB SPOT ELEVATION
- NEW GUTTER SPOT ELEVATION
- NEW SIDEWALK SPOT ELEVATION
- NEW SIDEWALK SPOT ELEVATION
- NEW SWALE
- DRAINAGE FLOW ARROW
- NEW CONTOURS

NORTH

20' 10' 0 20' 40'

(IN FEET)

SCALE 1" = 20'

GRADING PLAN

NOTE: THIS DRAWING WAS CREATED FOR PRODUCTION ON 22" X 34" SHEET SIZE. DO NOT SCALE PRINTS.

Texas Department of Transportation
125 E. 11th Street
Austin, Texas 78701-2483
(512) 416-3048

Copyright©2008 Texas Department of Transportation

THIS DOCUMENT IS RELEASED FOR THE PURPOSE OF
INFORMATION ONLY
NOT FOR REGULATORY
APPROVAL, PERMITTING,
OR CONSTRUCTION.

EDCOUCH
MAINTENANCE FACILITY

HIDALGO COUNTY, EDCOUCH TEXAS
PHARR DISTRICT

Revisions

Drawn by:
BAB
Project No.
--
Date
5/22/09
Sheet No.

C6.0
of X sheets

CADFILE: T:\MNTFMD02FTWCBC4704-00-837\02-77-4704008837\Acad\prototypical pdfs\edcouch\Acad\Civil\316 Grading.dwg Plotted: Tue. Aug. 11, 2009 @ 9:35 AM By: MBAZAN

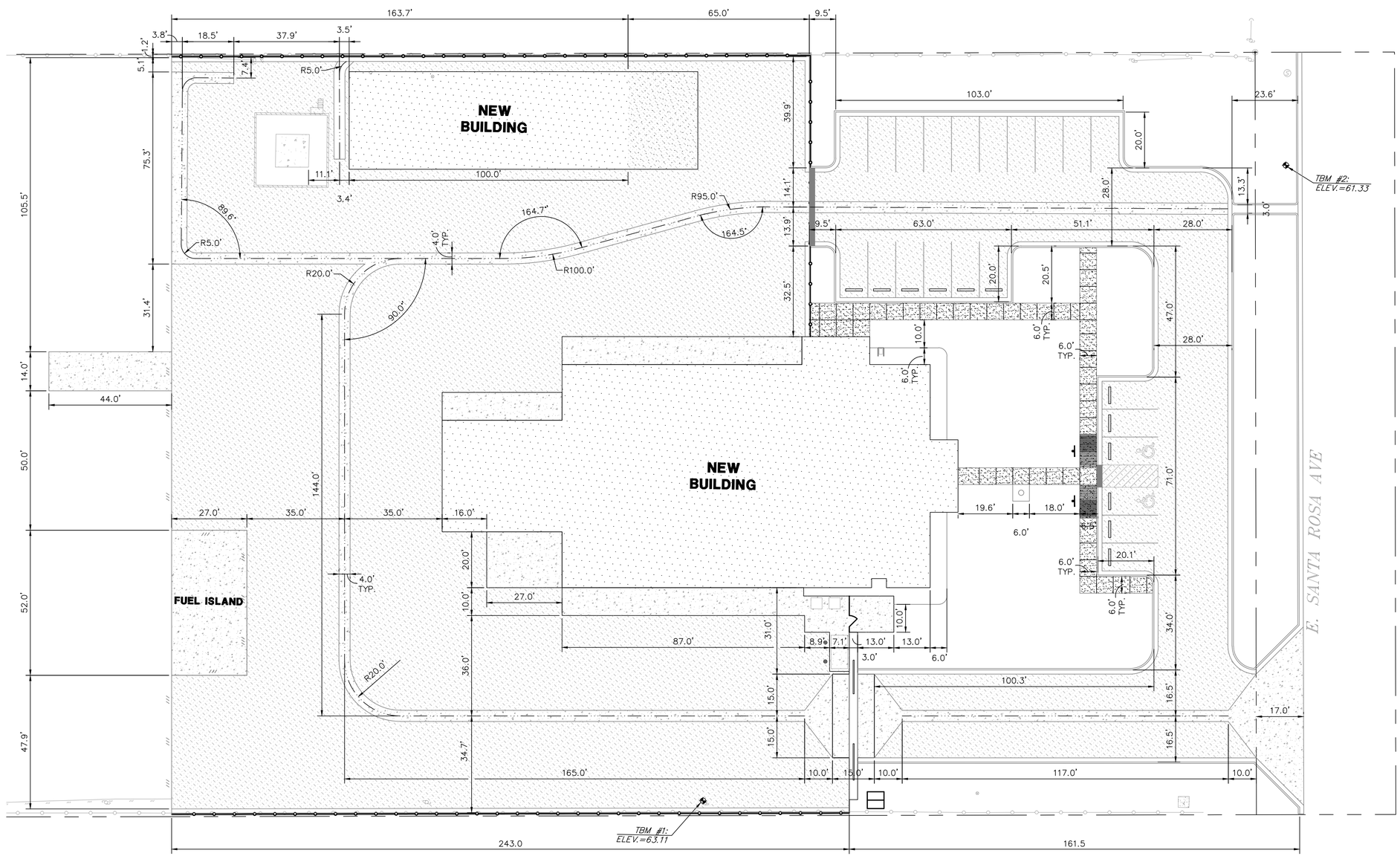

TEMPORARY BENCHMARK DATA

TBM #1: COTTON SPINDLE SET IN EAST FACE OF UTILITY POLE ELEV.=63.11
TBM #2: IRON ROD SET W/ ALUMINUM CAP ELEV.=61.33

LEGEND

- PROPERTY LINE
- EXIST. ASPHALT
- EXIST. CHAIN LINK FENCE
- EXIST. GUARDRAIL
- EXIST. CONCRETE
- EXIST. SIDEWALK
- EXIST. POWER POLE
- EXIST. GUY WIRE
- EXIST. TEMPORARY BENCHMARK
- NEW CONCRETE FLATWORK
- NEW CONCRETE PAVEMENT
- NEW ASPHALT PAVEMENT
- NEW FENCE, REF. ARCH'L.
- NEW EDGE OF ASPHALT PAVEMENT

GENERAL NOTES

1. CONTRACTOR SHALL IMMEDIATELY NOTIFY THE ENGINEER OF ANY QUESTIONS THAT MAY ARISE CONCERNING THE INTENT, PLACEMENT, OR LIMITS OF DIMENSIONS OR GRADES NECESSARY FOR CONSTRUCTION OF THIS PROJECT.
2. ALL DIMENSIONS ARE TO FACE OF CURB, TO FACE OF BUILDINGS, TO CENTER OF STRIPING, OR PERPENDICULAR TO THE PROPERTY LINE, UNLESS OTHERWISE NOTED.
3. SEE DETAIL SHEETS FOR ALL APPLICABLE DETAILS.
4. THE CONTRACTOR SHALL BE RESPONSIBLE FOR FURNISHING AND MAINTAINING ALL SIGNS, BARRICADES, AND LIGHTING OR WARNING DEVICE(S) USED/REQUIRED WITH THIS WORK.
5. THE CONTRACTOR SHALL BE RESPONSIBLE FOR ACQUIRING ALL NECESSARY PERMITS BEFORE BEGINNING CONSTRUCTION.
6. SURVEY DATA SHOWN ON THIS SHEET AND USED FOR DESIGN WAS PROVIDED BY OTHERS.
7. CONTRACTOR TO FIELD VERIFY ALL DIMENSIONS.
8. CONTRACTOR SHALL BE RESPONSIBLE FOR RESTORING TO ITS ORIGINAL OR BETTER CONDITION ANY DAMAGE DONE TO EXISTING UTILITIES, FENCES, PAVEMENT, CURBS, DRIVEWAYS, SIDEWALKS, OR SIGNS.
9. CONTRACTOR IS RESPONSIBLE FOR CONSTRUCTION STAKING.
10. REFERENCE ARCHITECTURAL PLANS FOR ADDITIONAL DIMENSIONS.
11. CONTRACTOR SHALL VERIFY ALL BUILDING DIMENSIONS WITH STRUCTURAL & ARCHITECTURAL DRAWINGS. NOTIFY ENGINEER OF ANY DISCREPANCIES FOUND.

DIMENSIONAL CONTROL PLAN

NOTE: THIS DRAWING WAS CREATED FOR PRODUCTION ON 22" X 34" SHEET SIZE. DO NOT SCALE PRINTS.

Texas Department of Transportation
125 E. 11th Street
Austin, Texas 78701-2483
(512) 416-3048

Copyright©2008 Texas Department of Transportation

THIS DOCUMENT IS RELEASED FOR THE PURPOSE OF
INFORMATION ONLY
NOT FOR REGULATORY
APPROVAL, PERMITTING,
OR CONSTRUCTION.

EDCOUCH
MAINTENANCE FACILITY
HIDALGO COUNTY, EDCOUCH TEXAS
PHARR DISTRICT

Revisions

Drawn by:
BAB
Project No.
--
Date
5/22/09
Sheet No.
C7.0
of X sheets

CADFILE: T:\MNTFMD02FTW\CBC4704-00-837\02-77-4704008837\Acad\prototypical pdfs\edcouch\Acad\Civil\316 Dim Control.dwg Plotted: Tue, Aug. 11, 2009 @ 9:21 AM By: MBAZAN

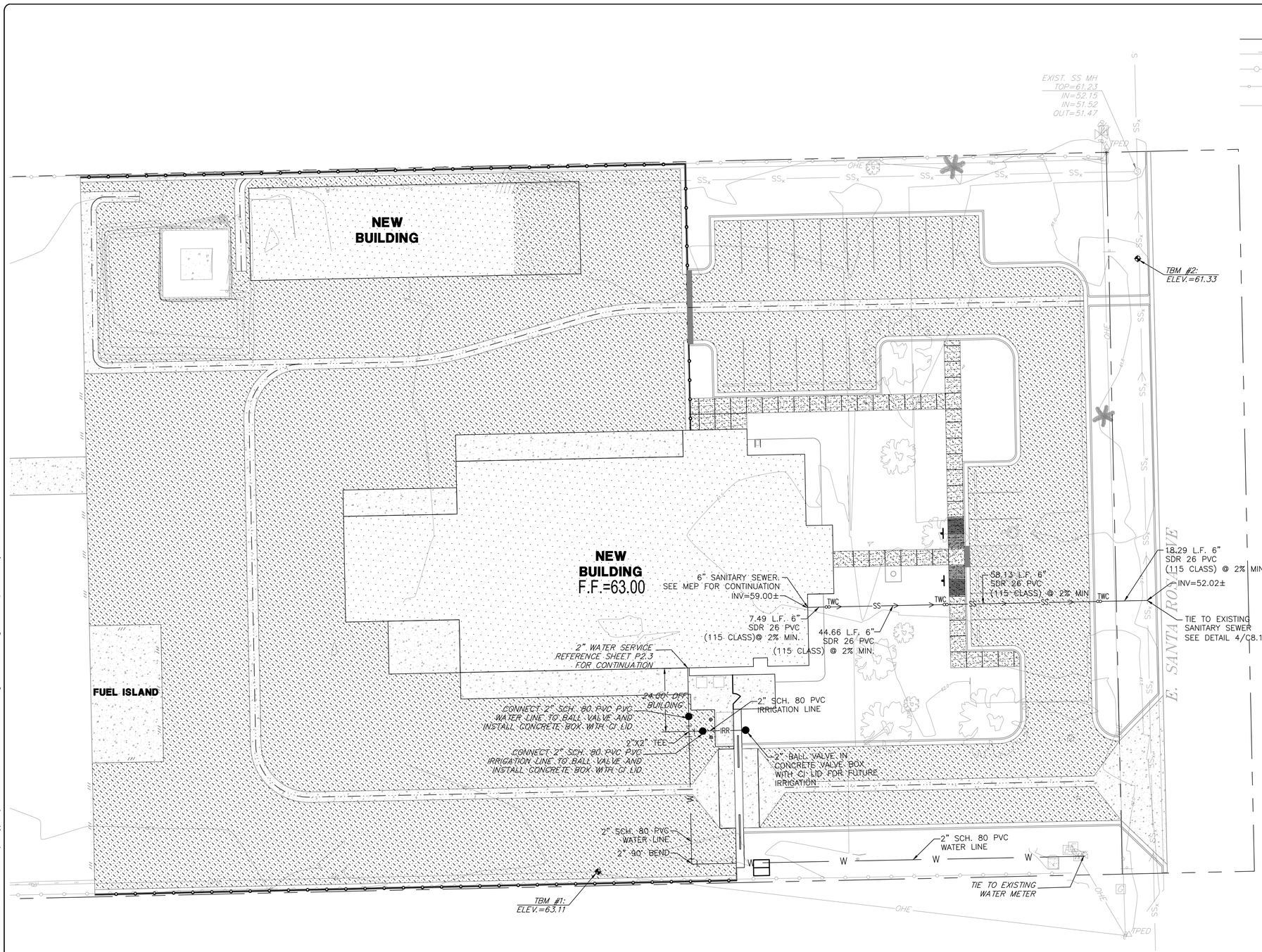

LEGEND

- PROPERTY LINE
- EXIST. ASPHALT
- EXIST. CHAIN LINK FENCE
- EXIST. GUARDRAIL
- EXIST. OVERHEAD ELECTRIC
- EXIST. CONCRETE
- EXIST. SIDEWALK
- EXIST. POWER POLE
- EXIST. LIGHT POLE
- EXIST. WATER VALVE
- EXIST. GAS VALVE
- EXIST. WATER METER
- EXIST. SIGN
- EXIST. GAS METER
- EXIST. ELECTRIC BOX
- EXIST. BOLLARD
- EXIST. GUY WIRE
- EXIST. TELEPHONE PEDESTAL
- EXIST. TEMPORARY BENCHMARK
- EXIST. IRON ROD
- EXIST. WELL
- EXIST. TREE
- EXIST. PALM TREE
- NEW CONCRETE FLATWORK SEE DETAIL 5/C5.2
- NEW CONCRETE PAVEMENT, REF STRUCTURAL
- NEW ASPHALT PAVEMENT, SEE DETAIL 4/C5.2.
- NEW FENCE, REF. ARCH'L.
- NEW EDGE OF ASPHALT PAVEMENT
- SS — NEW SANITARY SEWER
- TWC — NEW TWO WAY CLEANOUT
- IRR — NEW IRRIGATION LINE
- W — NEW WATER LINE

NORTH

40' 20' 0 40' 80'

(IN FEET)

SCALE 1" = 40'

UTILITY PLAN

NOTE: THIS DRAWING WAS CREATED FOR PRODUCTION ON 22" X 34" SHEET SIZE. DO NOT SCALE PRINTS.

Texas Department of Transportation
125 E. 11th Street
Austin, Texas 78701-2483
(512) 416-3048

Copyright©2008 Texas Department of Transportation

THIS DOCUMENT IS RELEASED FOR THE PURPOSE OF INFORMATION ONLY NOT FOR REGULATORY APPROVAL, PERMITTING, OR CONSTRUCTION.

EDCOUCH
MAINTENANCE FACILITY

HIDALGO COUNTY, EDCOUCH TEXAS
PHARR DISTRICT

Revisions

Drawn by:
BAB
Project No.
--
Date
5/22/09
Sheet No.

C8.0
of X sheets

CADFILE: T:\MNTFMD02FTWCBC4704-00-837\02-77-4704008370\Acad\prototypical pdfs\edcouch\Acad\Civil\316 Utilities.dwg Plotted: Tue, Aug. 11, 2009 @ 9:49 AM By: MBAZAN

SANITARY SEWER SYSTEM GENERAL NOTES

1. All materials and construction procedures within the scope of this project shall comply with the following as applicable:

   A. Current Texas Commission on Environmental Quality's Design Criteria for Sewerage Systems [30 TAC 217 in its entirety].

   B. Current TxDOT " Standard Specification for Construction of Highways, Streets and Drainage".

   C. Current 2006 IBC (Except 2005 NEC)

2. The Contractor shall not proceed with any pipe installation work until they obtain a copy of the Notice To Proceed from the Consultant and has arranged a meeting with the inspector and consultant for the work requirements.

3. The locations and depths of existing utilities, including service laterals, and drainage structures shown on the plans are approximate only. The Contractor shall verify the exact location and depths of underground utilities at least 48 hours prior to construction whether shown on plans or not, and to protect the same during construction.

4. The Contractor shall be responsible for restoring to its original or better condition from damage done to existing fences, curbs, streets, driveways, landscaping and structures.

5. The Contractor shall avoid cutting roots larger than one inch in diameter when excavating near existing trees. Excavation in vicinity of trees shall proceed with caution. The Contractor shall contact the Owner for guidance. The Construction Inspector, if applicable, shall also be notified.

6. The Contractor shall maintain service to existing sanitary sewers at all times during construction.

7. Due to Federal Regulations Title 49, Part 192.181, the local gas provider(s) must maintain access to gas valves at all times. The Contractor must protect and work around gas valves that are in the project areas.

8. All residential sewer service laterals shall be extended to the property line and capped and sealed.

BLASTING

9. When allowable, blasting shall be performed in accordance with appropriate criteria established by the National Fire Protection Association [30 TAC 313.5 (c) (6)].

10. Blasting for sewer line excavation must be done in such a manner as to minimize the fracturing of rock beyond the required excavation. The Contractor shall consider the elevation of the existing sanitary sewer main in relation to the blasting charge and the relative direction of existing and proposed trenches. Blasting within such areas shall be accomplished only by qualified blasting contractors who hold blasting licenses from a qualified agency such as the San Antonio Fire Department in Bexar County. Any damage to existing sanitary sewers resulting from blasting shall be repaired and retested by the contractor at his own expense.

11. No blasting shall be performed within 75 feet of existing utilities.

12. After construction, testing will be done by TV camera by the Contractor and observed by Inspector, and Wastewater Engineering personnel, as the camera is run through the lines. Any abnormalities, such as broken pipe or misaligned joints, must be replaced by the Contractor at his expense. Contractor to provide TV tapes to Construction Inspection for review prior to final inspection of the project.

EXCAVATION

13. Contractor and/or Contractor's independently retained employee or structural design/geotechnical/safety/equipment consultant, if any, shall review these plans and available geotechnical information and the anticipated installation site(s) within the project work area in order to implement Contractor's trench excavation safety protection systems, programs and/or procedures. The Contractor's implementation of the systems, programs and/or procedures shall provide for adequate trench excavation safety protection that complies with as a minimum, OSHA Standards for trench excavations. Specifically, Contractor and/or Contractor's independently retained employee or safety consultant shall implement a trench safety program in accordance with OSHA Standards governing the presence and activities of individuals working in and around trench excavation.

14. Contractor is responsible for removal of all waste materials upon project completion. The Contractor shall not permanently place any waste materials in the 100-year flood plain without first obtaining an approved Flood Plain Development Permit.

15. Water jetting the backfill will not be permitted. Sanitary sewer trenches subject to traffic shall conform to the applicable details and project specifications.

WATER LINE CROSSING

16. Where the minimum 9 foot separation distance between sewer lines and water lines/mains cannot be maintained, the installation of sewer lines shall be in strict accordance with the Texas Commission On Environmental Quality's Rules (30 TAC 217).

EROSION AND SEDIMENTATION CONTROL

17. The Texas Commission on Environmental Quality and Environmental Protection Agency (EPA) require erosion and sedimentation control for construction of sewer collection systems. Developer or authorized representative shall provide erosion and sedimentation control as notes on the project's plan and profile sheets.

18. All temporary erosion and sedimentation controls shall be removed by the Contractor at final acceptance of the project.

SUPPLEMENTARY

19. No extra-payment shall be allowed for work called for on the plans but not included on the bid schedule. This incidental work will be required and shall be included under the pay item to which it relates.

20. All PVC Sewer Pipe with over 14 feet of cover shall be extra strength pipe, Minimum Stiffness of 115 PSI.

21. WORK COMPLETED BY THE CONTRACTOR WHICH HAS NOT RECEIVED A WORK ORDER OR THE NOTICE TO PROCEED FROM THE CONSULTANT WILL BE SUBJECT TO REMOVAL AND REPLACEMENT BY AND AT THE EXPENSE OF THE CONTRACTOR.

THESE GENERAL CONSTRUCTION NOTES MUST BE INCLUDED ON THE CONSTRUCTION PLANS PROVIDED TO THE CONTRACTOR AND ALL SUBCONTRACTORS.

Note: Finished elevations on the sanitary sewer cleanouts shall be 3-inches above finished grade. Clean fill shall be added and sloped from all rims to ensure positive drainage.

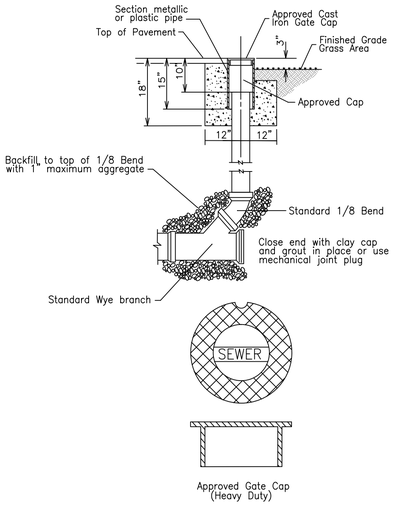

1 TYPICAL CLEANOUT DETAIL

N.T.S.

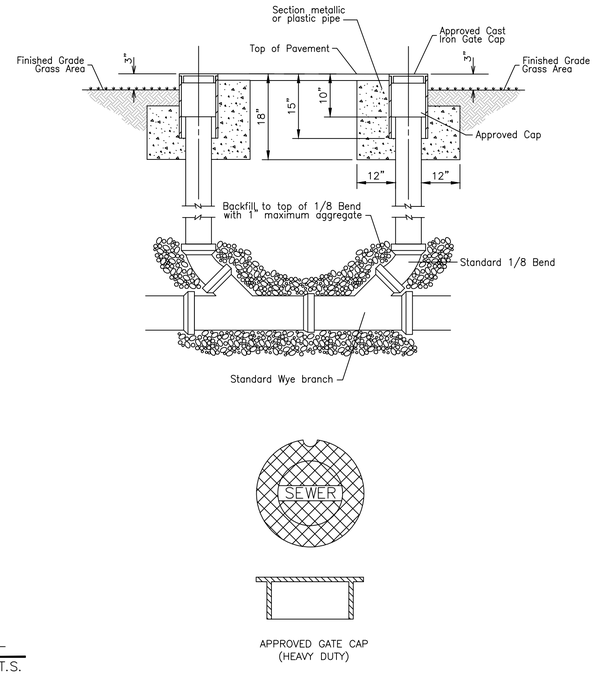

2 TYPICAL TWO-WAY CLEANOUT DETAIL

N.T.S.

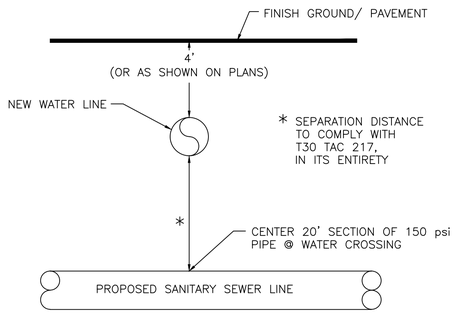

3 TYPICAL SANITARY SEWER & WATER CROSSING DETAIL

N.T.S.

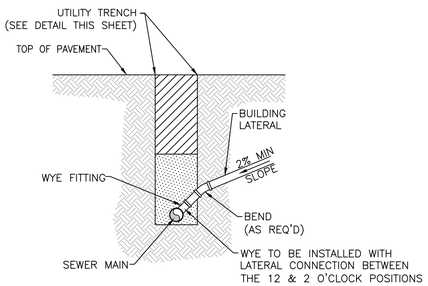

NOTE:
DEPTH AND GRADE OF SERVICE LATERALS AS SHOWN, ARE TYPICAL ONLY. ACTUAL DEPTH, ALIGNMENT, AND GRADE OF SERVICE LATERALS SHALL BE DETERMINED BY THE CONTRACTOR IN THE FIELD BASED ON THE ELEVATIONS OF THE SEWER MAIN, PAVEMENT, NATURAL GROUND, AND THE BUILDING TO BE SERVED.

4 TYPICAL LATERAL CONNECTION DETAIL

N.T.S.

UTILITY DETAILS

NOTE: THIS DRAWING WAS CREATED FOR PRODUCTION ON 22" x 34" SHEET SIZE. DO NOT SCALE PRINTS.

Texas Department of Transportation
125 E. 11th Street
Austin, Texas 78701-2483
(512) 416-3048

Copyright©2008 Texas Department of Transportation

THIS DOCUMENT IS RELEASED FOR THE PURPOSE OF INFORMATION ONLY NOT FOR REGULATORY APPROVAL, PERMITTING, OR CONSTRUCTION.

EDCOUCH
MAINTENANCE FACILITY
HIDALGO COUNTY, EDCOUCH TEXAS
PHARR DISTRICT

Revisions

Drawn by:
STAFF
Project No.
--
Date
5/22/09
Sheet No.

C8.1
of X sheets

CADFILE: T:\MNTFM\D02FTWCBC4704-00-837\02-77-4704008837A\cad\grototypical pdfs\etcouchACad\Civil\316 UTILITY DETAILS.dwg Plotted: Tue, Aug. 11, 2009 @ 9:51 AM By: MBAZAN

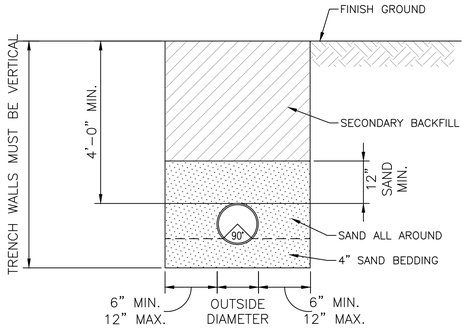

NOTE:
ACTUAL DEPTH OF COVER MAY VARY TO FACILITATE CROSSING OF OTHER UTILITIES.

1 TRENCH DETAIL

N.T.S.

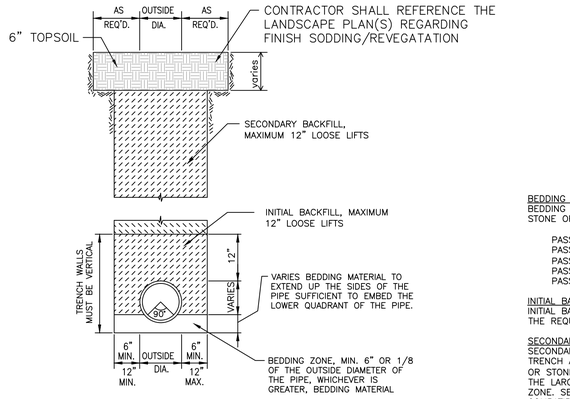

BEDDING MATERIAL
BEDDING MATERIAL SHALL BE COMPOSED OF WELL GRADED, CRUSHED STONE OR GRAVEL CONFORMING TO THE FOLLOWING REQUIREMENTS:

SEWER GRAVEL	PERCENT
PASSING 1-1/2 INCH SIEVE	100
PASSING 1 INCH SIEVE	95 TO 100
PASSING 3/8 INCH SIEVE	25 TO 60
PASSING NO. 4 SIEVE	0 TO 10
PASSING NO. 8 SIEVE	0 TO 5

INITIAL BACKFILL
INITIAL BACKFILL SHALL CONSIST OF GRAVEL WHICH TO CONFORMS TO THE REQUIREMENTS FOR BEDDING MATERIAL.

SECONDARY BACKFILL
SECONDARY BACKFILL SHALL CONSIST OF MATERIAL REMOVED FROM THE TRENCH AND SHALL BE FREE OF BRUSH, DEBRIS AND TRASH. NO ROCK OR STONES HAVING ANY DIMENSION LARGER THAN SIX INCHES (6") AT THE LARGEST DIMENSION SHALL BE USED IN THE SECONDARY BACKFILLING ZONE. SECONDARY BACKFILL SHALL BE PRIMARILY COMPOSED OF COMPATIBLE SOIL MATERIALS.

2 TYP. NATURAL GROUND TRENCH DETAIL

N.T.S.

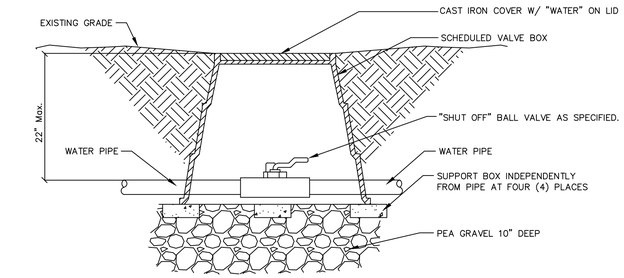

3 BALL VALVE AND BALL BOX

N.T.S.

UTILITY DETAILS

NOTE: THIS DRAWING WAS CREATED FOR PRODUCTION ON 22" x 34" SHEET SIZE. DO NOT SCALE PRINTS.

Texas Department of Transportation
125 E. 11th Street
Austin, Texas 78701-2483
(512) 416-3048

Copyright©2008 Texas Department of Transportation

THIS DOCUMENT IS RELEASED FOR THE PURPOSE OF
INFORMATION ONLY
NOT FOR REGULATORY
APPROVAL, PERMITTING,
OR CONSTRUCTION.

EDCOUCH
MAINTENANCE FACILITY

HIDALGO COUNTY, EDCOUCH TEXAS
PHARR DISTRICT

Revisions

Drawn by:
STAFF
Project No.
--
Date
5/22/09
Sheet No.

C8.2
of X sheets

CADFILE: T:\MNTFMID02FTW\CBC4704-00-837\02-77-47040837\Acad\prototypical pdfs\edcouch\Acad\Civil\316 UTILITY DETAILS.dwg Plotted: Tue. Aug. 11, 2009 @ 9:51 AM By: MBAZAN

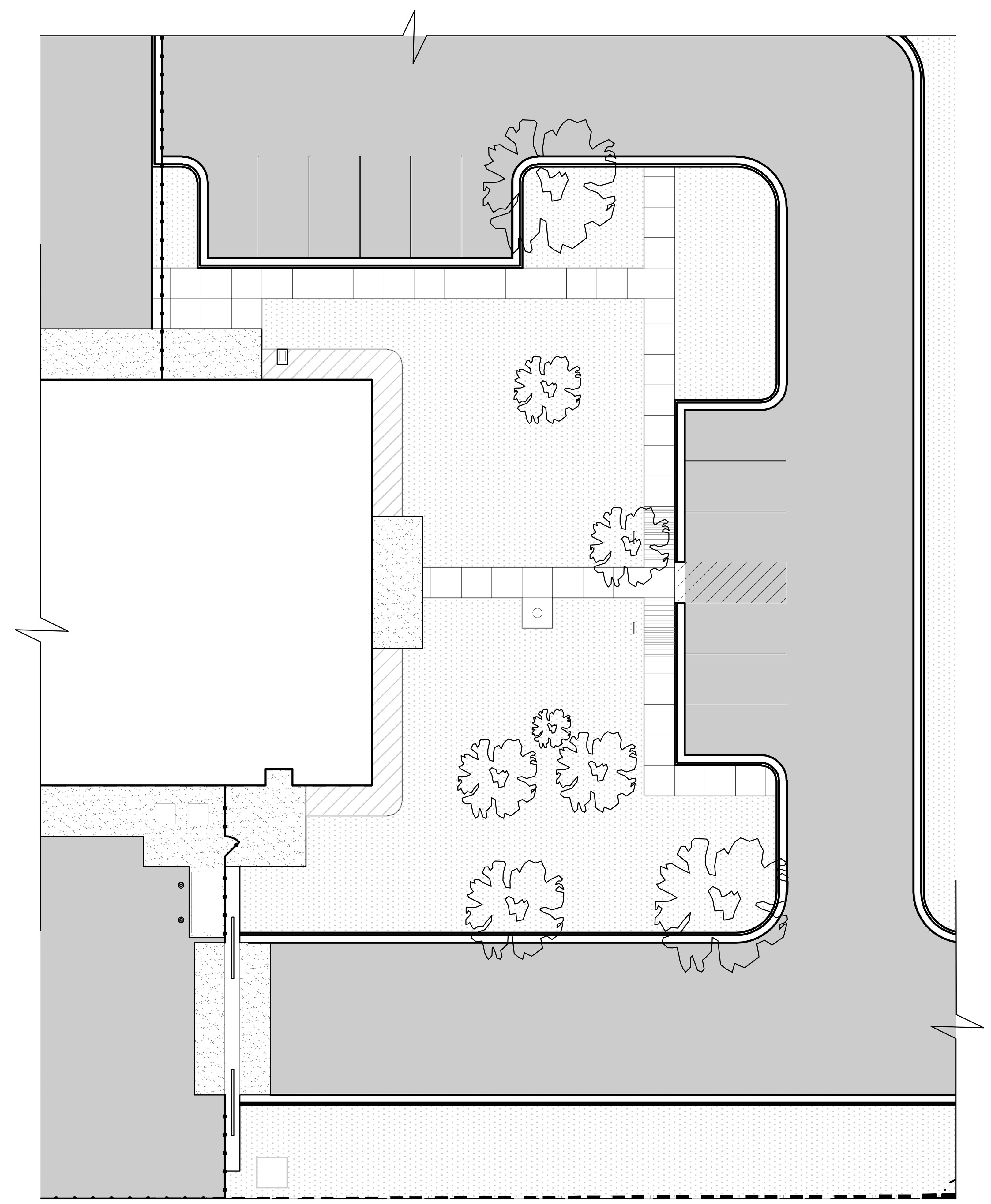

1 LANDSCAPE PLAN
SCALE: 1" = 20'-0"

LEGEND

- PLANTING BEDS
- LAWN
- CONCRETE
- EXISTING TREES TO REMAIN

LANDSCAPE LIST:

1. LAWN - BERMUDA SOD ON 6" TOP SOIL

2. BEDS - 6" PREPARED TOP SOIL
   - HARDWOOD MULCH - TOP 1"
   - 4" STEEL EDGING BETWEEN LAWN AND BEDS
   - CONCRETE SWALE FROM DOWN SPOUT TO LAWN

3. PLANTS - SEE ALLOWANCE

SPRINKLER SYSTEM

1. LAWN - SPRINKLER POP-UP HEADS WITH FULL COVERAGE OF SOD

2. BEDS - DRIP IRRIGATION & BUBBLERS LOCATED AFTER PLANTING PLAN DEVELOPED BY SUB-CONTRACTOR

LANDSCAPE PLAN

Texas Department of Transportation
125 E. 11th Street
Austin, Texas 78701-2483
(512) 416-3048

Copyright © 2005 Texas Department of Transportation

THIS DOCUMENT IS RELEASED FOR THE PURPOSE OF
INFORMATION ONLY
NOT FOR REGULATORY
APPROVAL, PERMITTING,
OR CONSTRUCTION.

EDCOUCH
MAINTENANCE FACILITY
HIDALGO COUNTY, EDCOUCH TEXAS
PHARR DISTRICT

Revisions

Drawn by:
RB/EE

Project No.

Date
05-26-2009

Sheet No.
A1.0
of 28 sheets

NOTE: THIS DRAWING WAS CREATED FOR PRODUCTION ON 22" x 34" SHEET SIZE. DO NOT SCALE PRINTS.

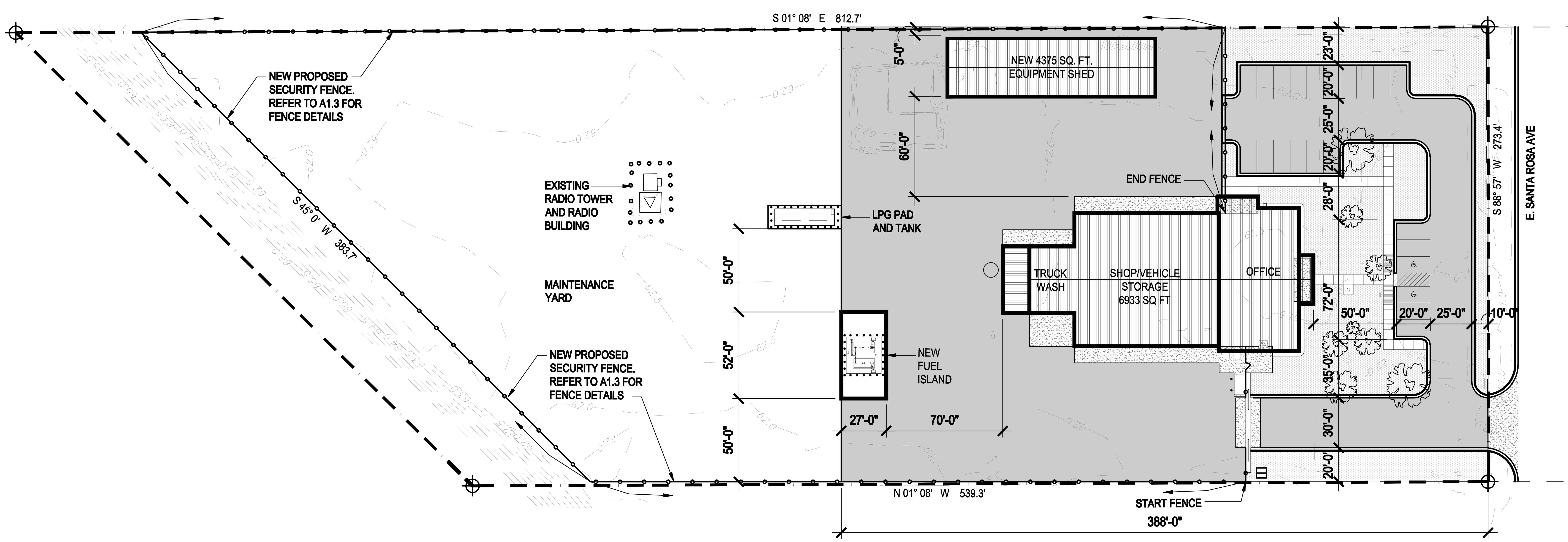

1 SITE PLAN
SCALE: 1" = 40'-0"

20' 40' 80' 100'

NORTH

FTE SUMMARY	
TOTAL FTE:	16
PARKING STALLS	
FTE: 16X80%:	13
VISITOR PARKING:	6
TOTAL PARKING:	19

CONCEPTUAL SITE PLAN

NOTE: THIS DRAWING WAS CREATED FOR PRODUCTION ON 22" x 34" SHEET SIZE. DO NOT SCALE PRINTS.

Texas Department of Transportation

THIS DOCUMENT IS RELEASED FOR THE PURPOSE OF INFORMATION ONLY
NOT FOR REGULATORY APPROVAL, PERMITTING, OR CONSTRUCTION.

EDCOUCH MAINTENANCE FACILITY
HIDALGO COUNTY, EDCOUCH TEXAS
PHARR DISTRICT

Revisions

Drawn by: RB/EE
Project No.
Date 05-26-2009
Sheet No.
A1.1
of 28 sheets

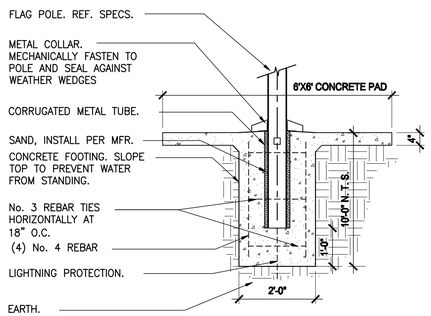

9 FLAG POLE BASE
SCALE: 1/2" = 1'-0"

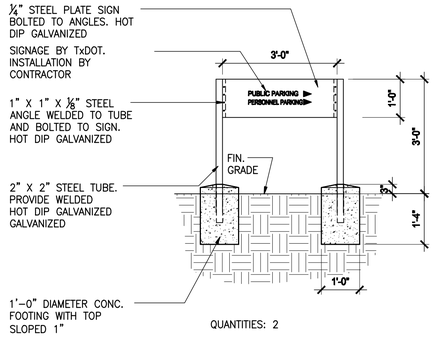

QUANTITIES: 2

6 ENTRY SIGN ELEVATION
SCALE: 1/2" = 1'-0"

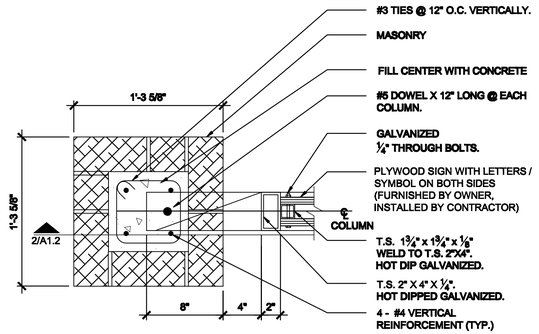

3 TXDOT SIGN PLAN VIEW
SCALE: 1 1/2" = 1'-0"

THIS DOCUMENT IS RELEASED FOR THE PURPOSE OF
INFORMATION ONLY
NOT FOR REGULATORY APPROVAL, PERMITTING, OR CONSTRUCTION.

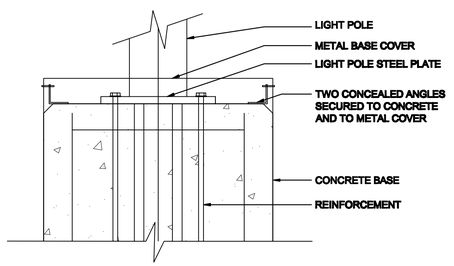

11 LIGHT POLE DETAIL
SCALE: 1 1/2" = 1'-0"

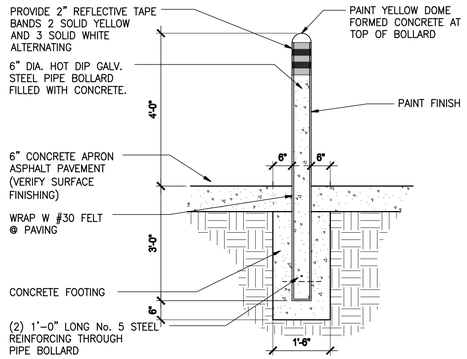

8 BOLLARD DETAIL @ OPEN AREAS
SCALE: 1/2" = 1'-0"

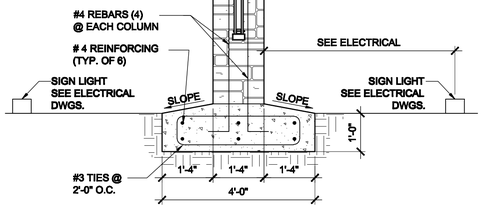

5 TXDOT SIGN SECTION
SCALE: 1/2" = 1'-0"

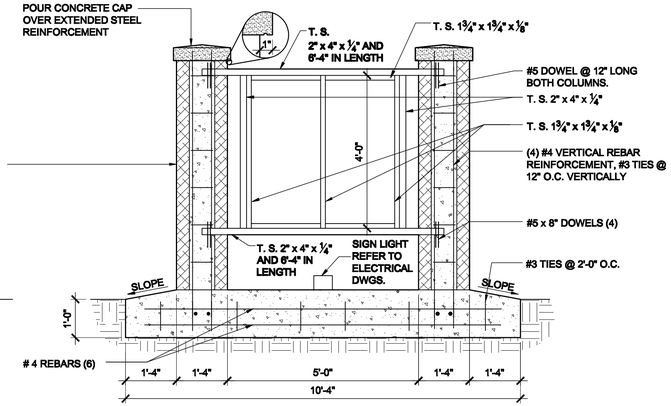

2 TXDOT SIGN SECTION
SCALE: 1/2" = 1'-0"

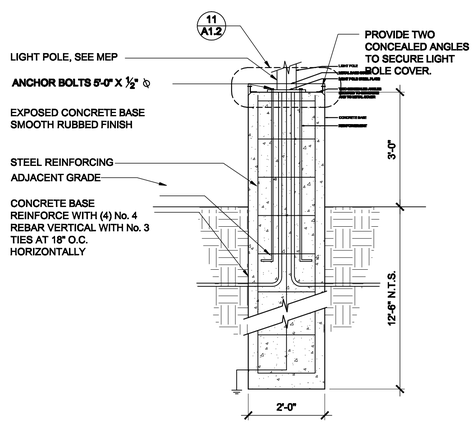

10 LIGHT POLE DETAIL
SCALE: 1/2" = 1'-0"

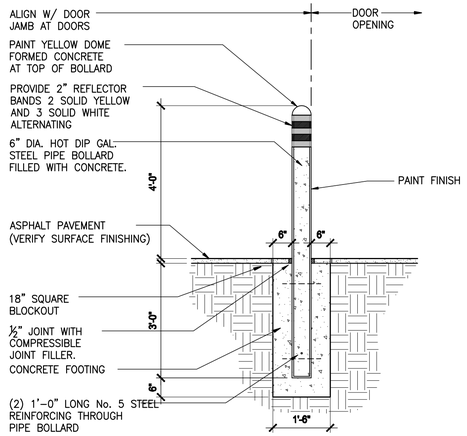

7 BOLLARD DETAIL @ BLDG DOORS
SCALE: 1/2" = 1'-0"

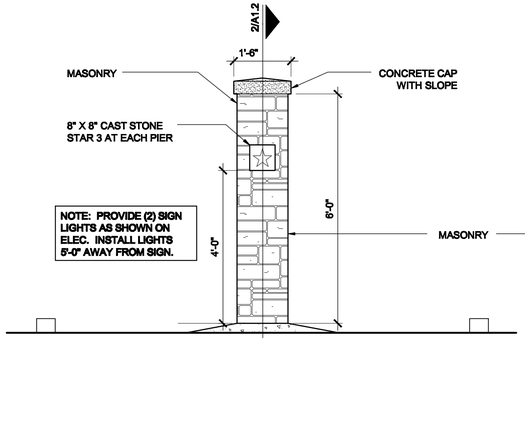

4 TXDOT SIGN ELEVATION
SCALE: 1/2" = 1'-0"

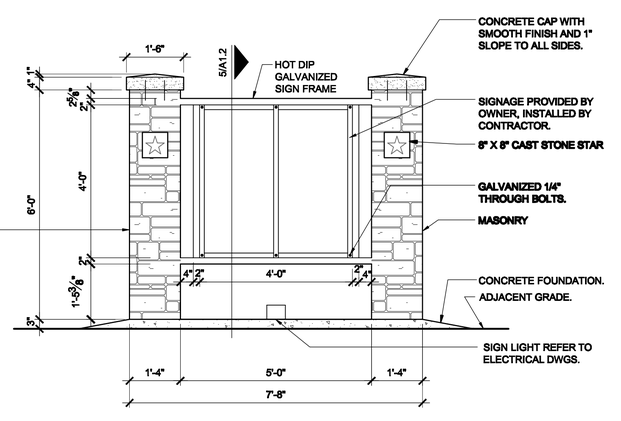

1 TXDOT SIGN ELEVATION
SCALE: 1/2" = 1'-0"

SITE DETAILS

NOTE: THIS DRAWING WAS CREATED FOR PRODUCTION ON 22" x 34" SHEET SIZE. DO NOT SCALE PRINTS.

Texas Department of Transportation
125 E. 11th Street
Austin, Texas 78701-2483
(512) 416-2000
Copyright © 2009 Texas Department of Transportation

EDCOUCH MAINTENANCE FACILITY
HIDALGO COUNTY, EDCOUCH TEXAS
PHARR DISTRICT

Revisions

Drawn by: RB/EE
Project No.
Date 05-26-2009
Sheet No.
A1.2
of 28 sheets

CADFILE: T:\MNTFM\DSGFTWC\BC-0704-00-857\02-77-4704000837\Vcad\prototype\pdf files\edcouch\Vcad\Arch\1604_A1_2.dwg Plotted: Fri, Aug. 07, 2009 @ 11:05 AM By: MBAZAN

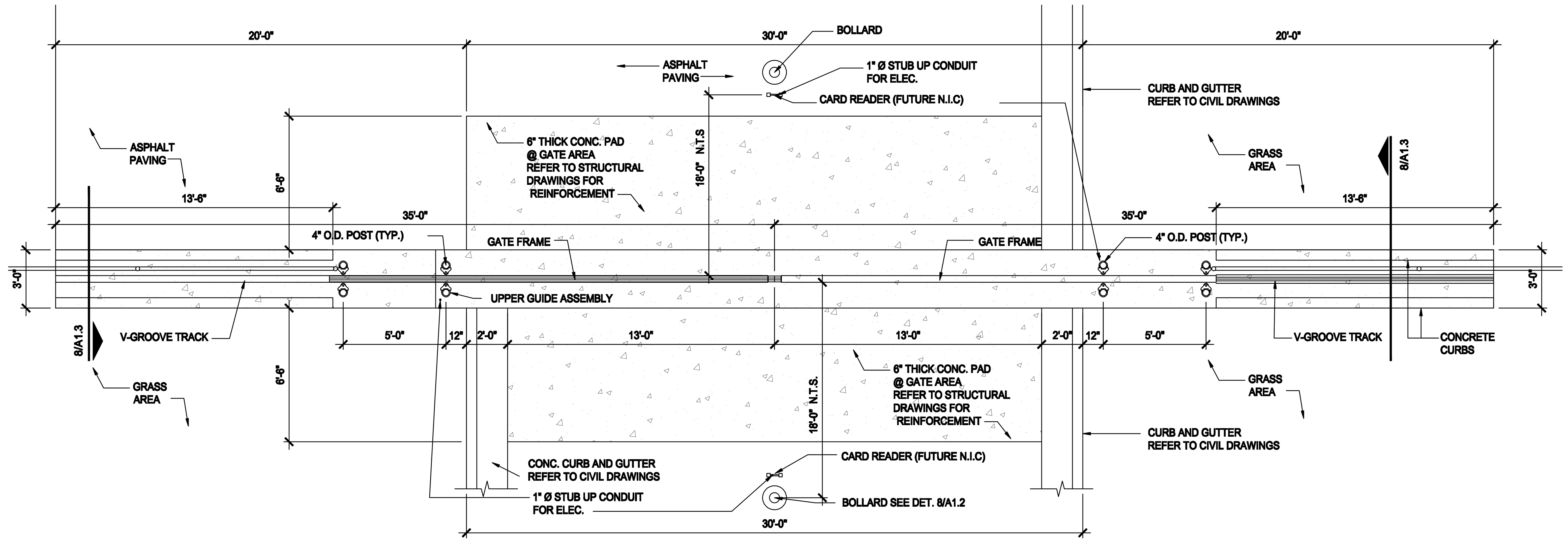

1 PLAN @ SECURITY GATE
SCALE: 1/4" = 1'-0"

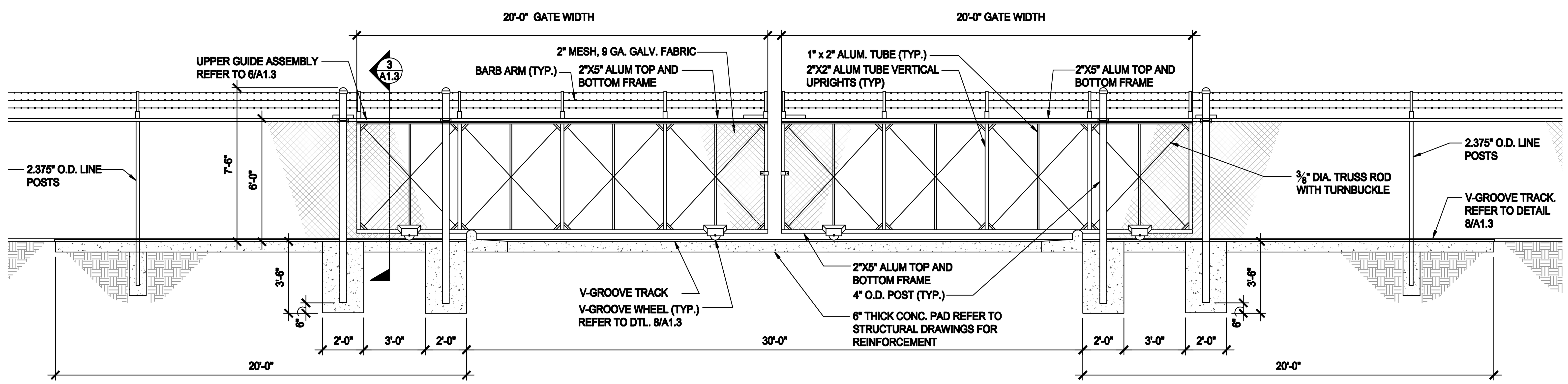

2 STANDARD ROLLING SECURITY GATE
SCALE: 1/4" = 1'-0"

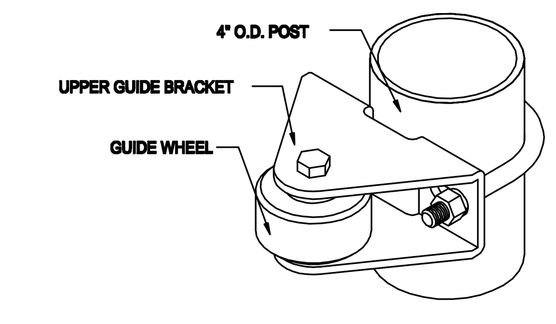

6 UPPER GUIDE ASSEMBLY
SCALE: NTS

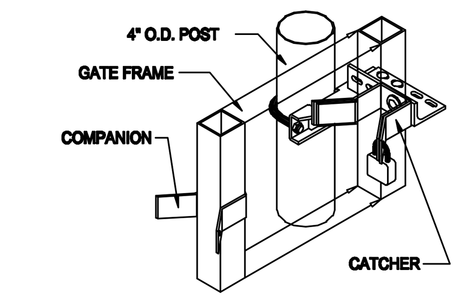

7 CATCH ASSEMBLY
SCALE: 3/8" = 1'-0"

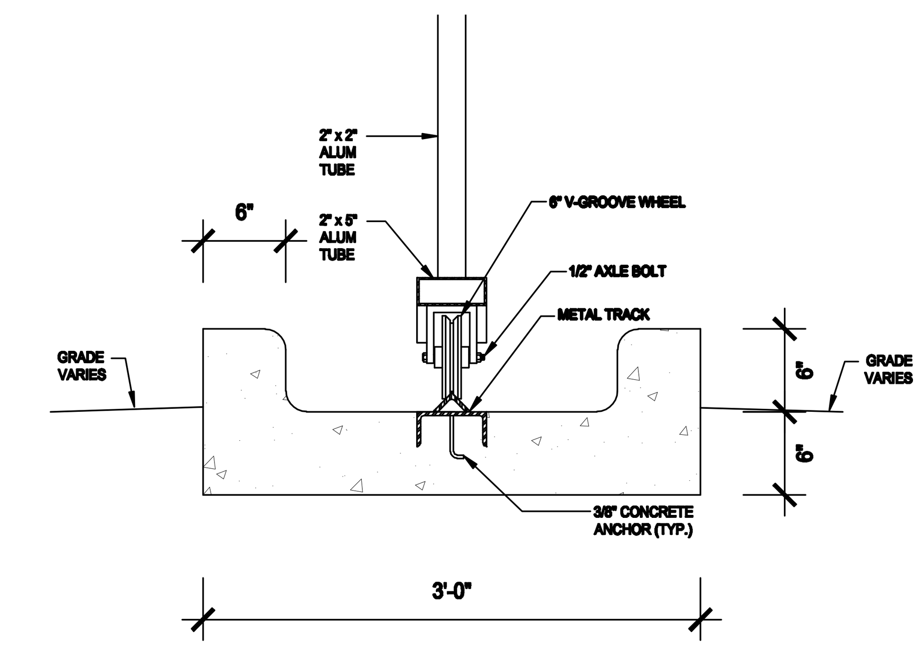

8 V-GROOVE WHEEL ASSEMBLY
SCALE: 1" = 1'-0"

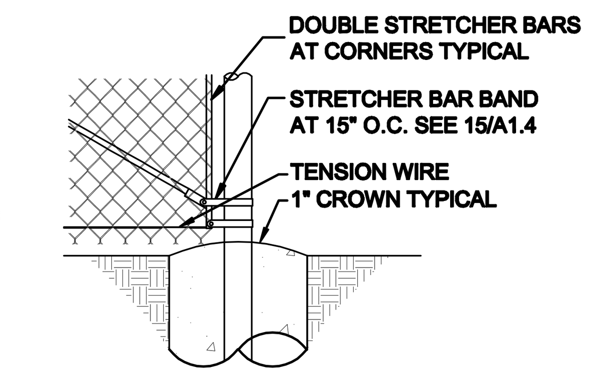

9 CORNER OR END POST DETAIL
SCALE: 1" = 1'-0"

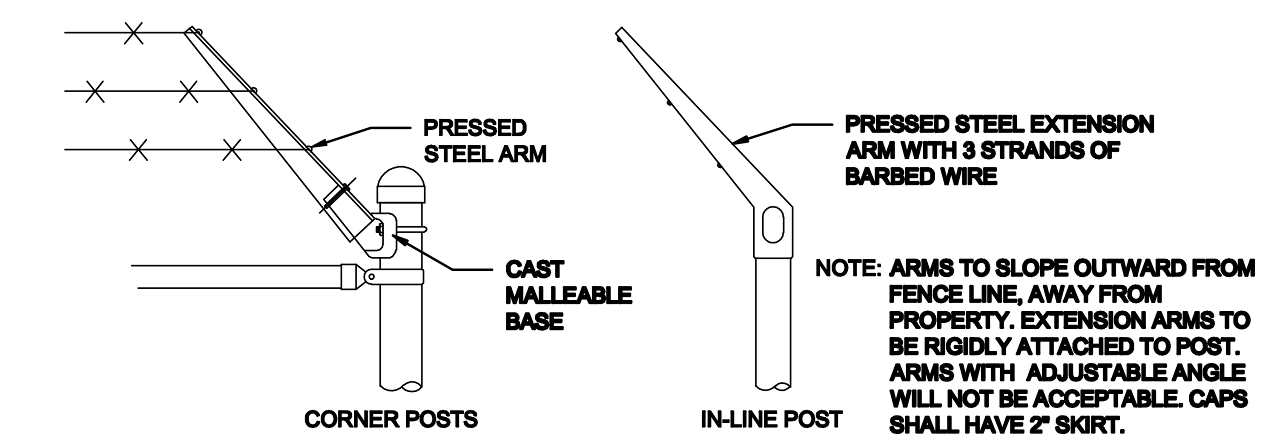

10 BARBED WIRE GATE SECTION
SCALE: 1" = 1'-0"

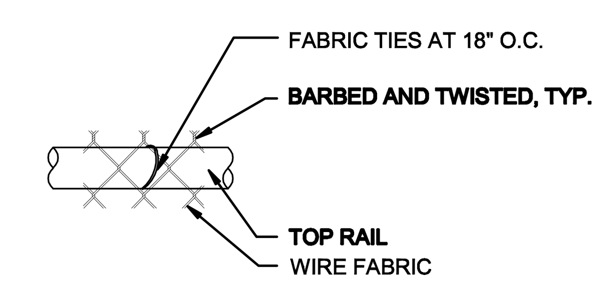

19 FABRIC & TOP RAIL
SCALE: N. T. S.

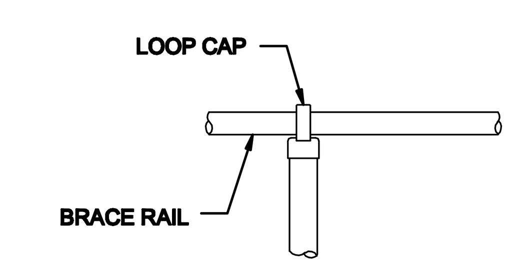

16 TOP RAIL
SCALE: N. T. S.

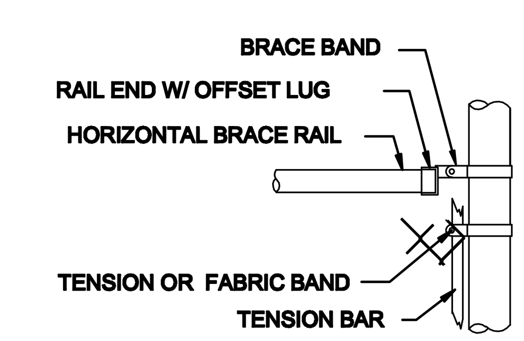

13 BRACE RAIL
SCALE: N. T. S.

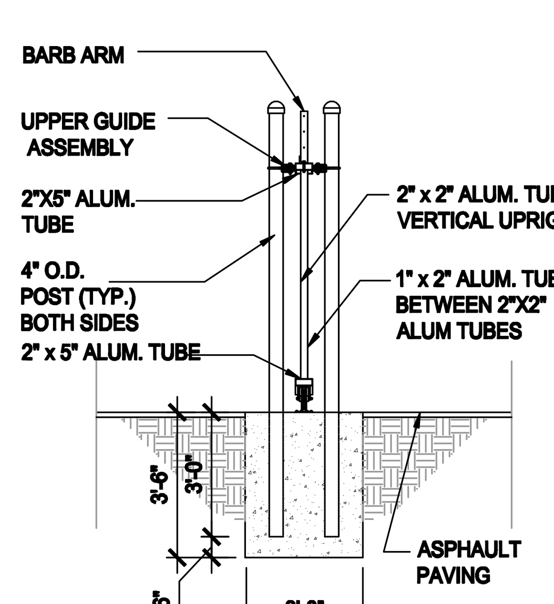

3 GATE SECTION
SCALE: 1/4" = 1'-0"

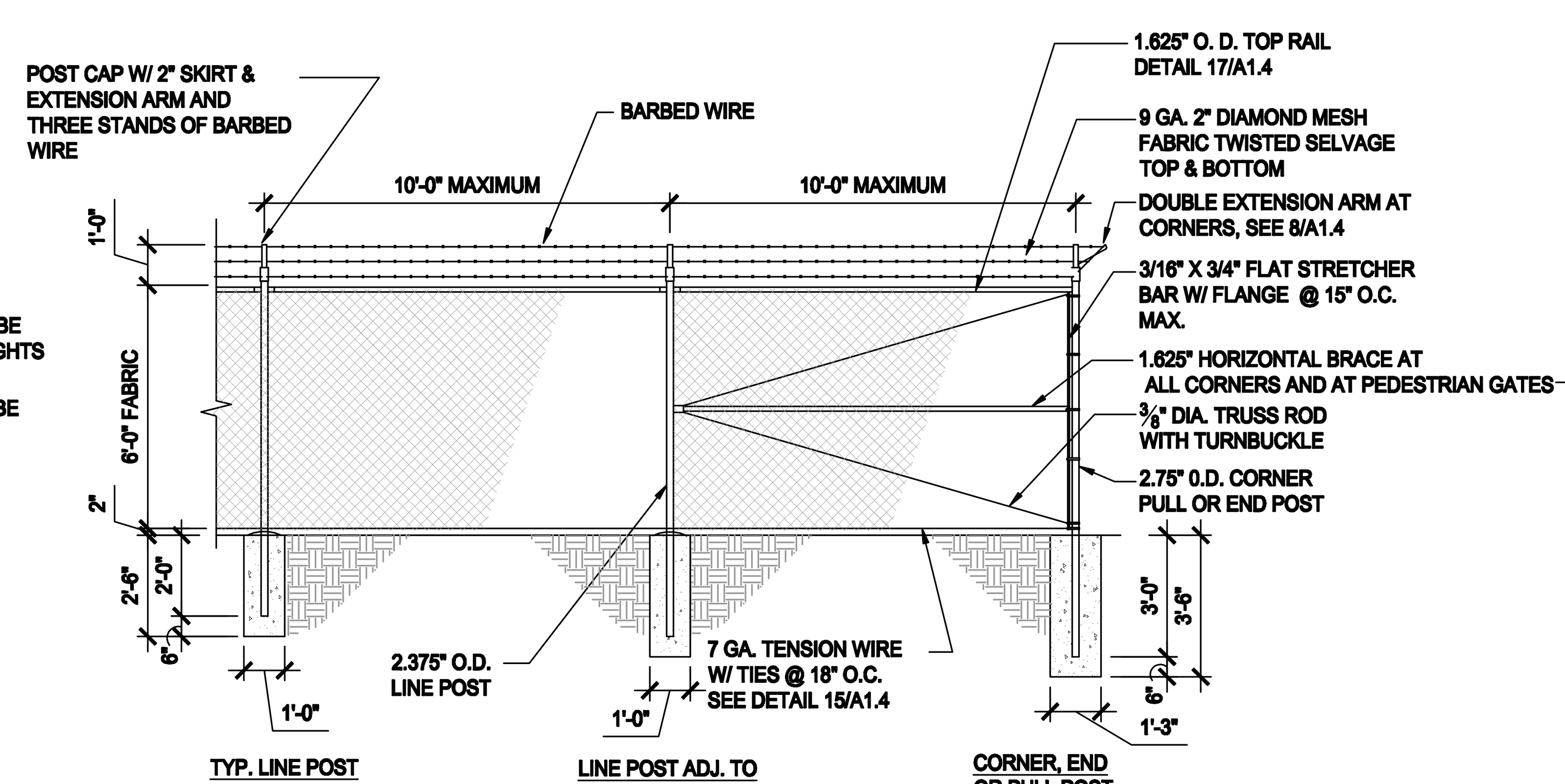

4 SECURITY FENCING WITH BARBED WIRE
SCALE: 1/4" = 1'-0"

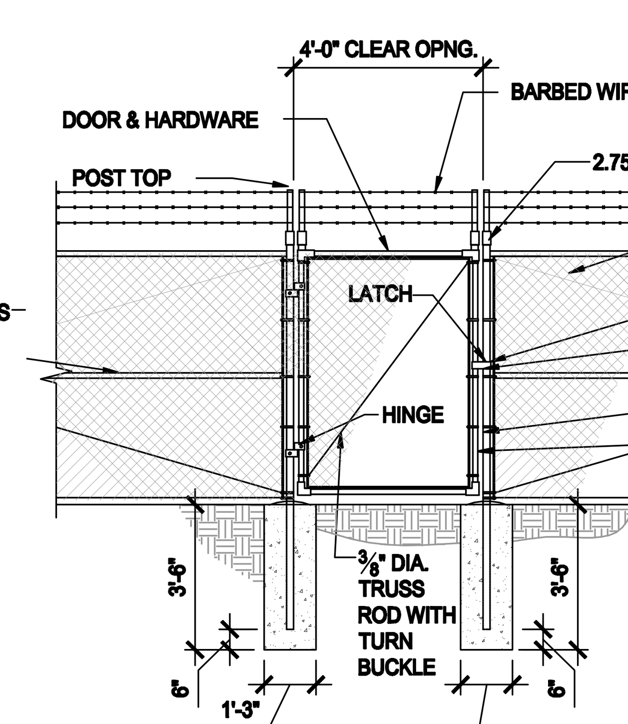

5 PEDESTRIAN GATE
SCALE: 1/4" = 1'-0"

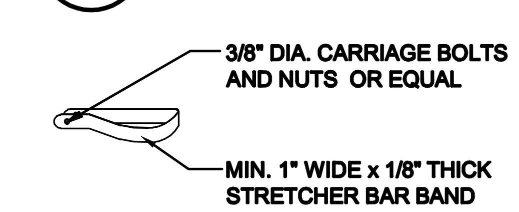

18 STRETCHER BAR BAND
SCALE: N. T. S.

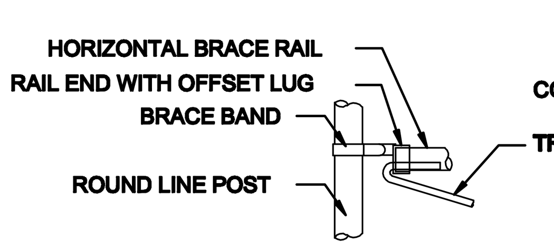

15 ELEVATION LINE POST
SCALE: N. T. S.

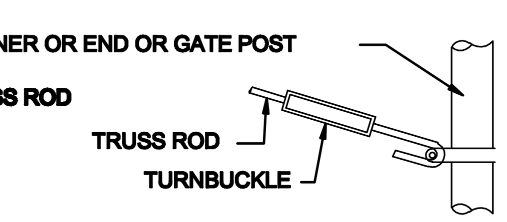

12 ELEVATION END POST
SCALE: N. T. S.

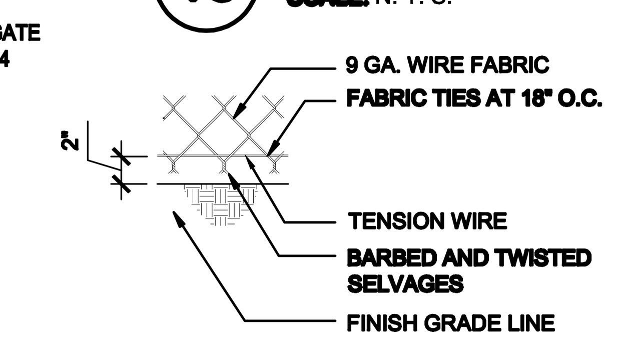

17 FABRIC & BOTTOM TENSION WIRE
SCALE: N. T. S.

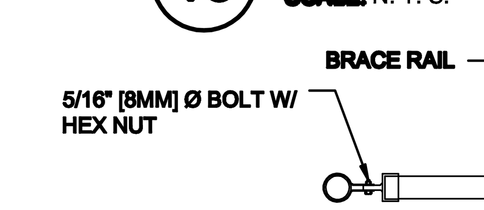

14 PLAN LINE POST
SCALE: N. T. S.

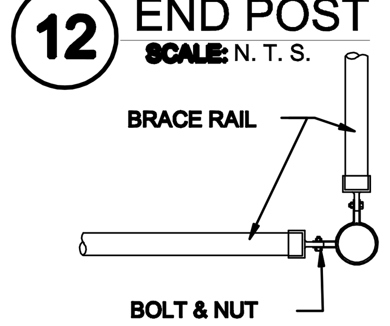

11 PLAN END POST
SCALE: N. T. S.

GATE & FENCE DETAILS

NOTE: THIS DRAWING WAS CREATED FOR PRODUCTION ON 22" x 34" SHEET SIZE. DO NOT SCALE PRINTS.

Texas Department of Transportation
125 E. 11th Street
Austin, Texas 78701-2483
(512) 416-3048
Copyright © 2005 Texas Department of Transportation

THIS DOCUMENT IS RELEASED FOR THE PURPOSE OF INFORMATION ONLY
NOT FOR REGULATORY APPROVAL, PERMITTING, OR CONSTRUCTION.

EDCOUCH MAINTENANCE FACILITY
HIDALGO COUNTY, EDCOUCH TEXAS
PHARR DISTRICT

Revisions

Drawn by: RB/EE
Project No.
Date 05-26-2009
Sheet No.
A1.3
of 28 sheets

CADFILE: T:\MNT\MOD\2FTW\CSC\4704-00-837\02-77-4704005\37\Acad\prototypical pdfs\edcouch\Acad\Arch\684_A1_3.dwg Plotted: Fri, Aug. 07, 2009 @ 11:09 AM By: MBAZAN

CODE ANALYSIS
2006 INTERNATIONAL BUILDING CODE

USE AND OCCUPANCY CLASSIFICATION - CHAPTER 3

USE	CLASSIFICATION	FIRE RATING
ADMINISTRATIVE OFFICE 3,600 S.F.	BUSINESS GROUP B	0
TRUCK WASH BAY 1,760 S.F.	GROUP B	0
EQUIPMENT SHOP 1,840 S.F.	GROUP S1	0
SHOP STORAGE 569 S.F.	GROUP S1	1 HR.
MATERIAL STORAGE 897 S.F.	GROUP S1	1 HR.
VEHICLE STORAGE 3,360 S.	GROUP S1	0

REQUIRED SEPARATION OF OCCUPANCIES (HOURS)
TABLE 508.3.3

OCCUPANCY (NON-SPRINKLED) BETWEEN:	HRS.
GROUP B AND GROUP S1	0
GROUP S1 AND GROUP S1	0
STORAGE ROOMS OVER 100 S.	1

TYPE OF CONSTRUCTION - II B TABLE 601
FIRE-RESISTENANCE RATING REQUIREMENTS FOR BUILDING ELEMENTS

BUILDING ELEMENT	HRS.
STRUCTURAL FRAME	0
BEARING WALL (EXTERIOR & INTERIOR)	0
NONBEARING WALLS / PARTITIONS (INTERIOR & EXTERIOR)	0
FLOOR CONSTRUCTION (BEAM & JOISTS)	0
ROOF CONSTRUCTION (BEAMS & JOISTS)	0

ALLOWABLE HEIGHTS AND BUILDING AREAS
TABLE 503

GROUP	ALLOWABLE HEIGHT	ALLOWABLE AREA
GROUP B	4 STORIES	23,000 S.F.
GROUP S1	3 STORIES	17,500 S.F.

MEANS OF EGRESS - CHAPTER 10

OCCUPANT LOAD

FUNCTION OF SPACE	FLOOR AREA IN S.F. PER OCCUPANT
BUSINESS AREAS	100 GROSS
WAREHOUSES / STORAGE AREAS	500 GROSS

ADMIN. OFFICE: 3,600 S.F. DIVIDED BY 100S.F.	36 OCCUPANT LOAD MIN. 2 EXITS REQUIRED
EQUIPMENT SHOP: 1,840 S.F. DIVIDED BY 500	4 OCCUPANT LOAD-MIN. 1 EXIT REQUIRED
SHOP STORAGE: 596 S.F. DIVIDED BY 500	2 OCCUPANT LOAD-MIN. 1 EXIT REQUIRED
MATERIAL STORAGE: 897 S.F. DIVIDED BY 500	2 OCCUPANT LOAD-MIN. 1 EXIT REQUIRED
VEHICLE STORAGE: 3,276 S.F. DIVIDED BY 500	7 OCCUPANT LOAD-MIN. 1 EXIT REQUIRED
TRUCK WASH BAY: 1,760 S.F. DIVIDED BY 500	4 OCCUPANT LOAD-MIN. 1 EXIT REQUIRED
TOTAL OCCUPANT LOAD	55 OCCUPANT LOAD

EGRESS NOTES:

TABLE 1005.1 EGRESS WIDTH PER OCCUPANT SERVED WITHOUT SPRINKLER SYSTEM = 0.2

SEC. 1006.1 EXIT DISCHARGE SHALL BE ILLUMINATED AT ALL TIMES BUILDING IS OCCUPIED.

SEC. 1014.3 THE COMMON PATH OF EGRESS TRAVEL SHALL NOT EXCEED 75 FEET.

SEC. 1015.1 TWO EXITS REQUIRED WHEN THE OCCUPANT LOAD OF THE SPACE EXCEEDS 49.

TABLE 1016.1 THE MAXIMUM LENGTH OF EXIT ACCESS TRAVEL FOR GROUP B & S-1 WITHOUT A SPRINKLER SYSTEM SHALL NOT EXCEED 200 FEET.

TABLE 1017.1 CORRIDORS SHALL BE FIRE-RESISTANCE RATED FOR GROUPS B & S WHEN OCCUPANT LOAD SERVED BY THE CORRIDOR IS GREATER THAN 30.

SEC. 1017.2 MIN. CORRIDOR WIDTH SHALL BE 44".

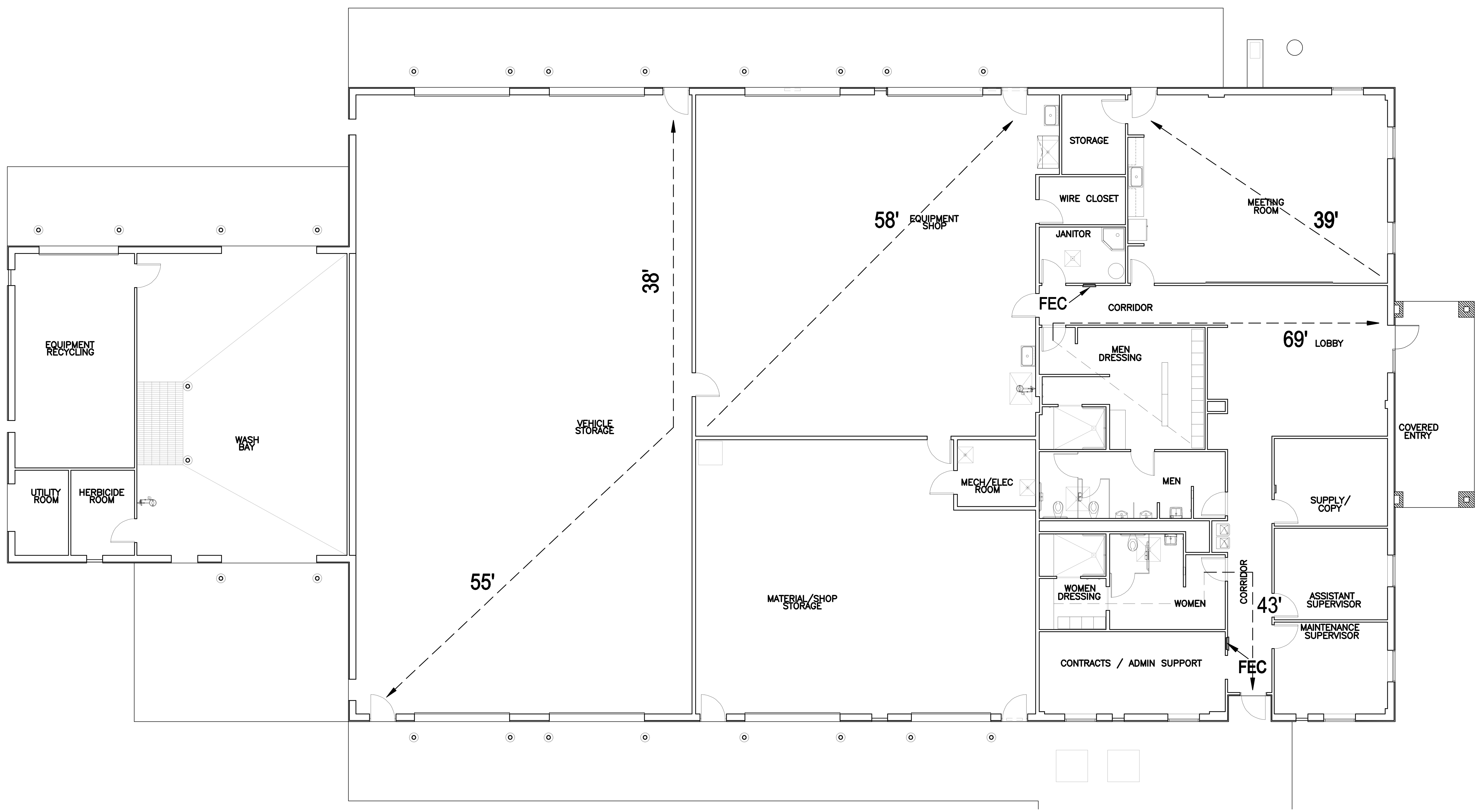

1 FLOOR PLAN - OFFICE BUILDING / LAB/ SHOP/VEHICLE STORAGE
SCALE: 1/16" = 1'-0"

LEGEND

	WALL
	NO FIRE RATED WALLS EXCEPT AT STORAGE ROOM EXCEEDING 100 S.F WITH 5/8" TYPE "X" GWB UP TO BOTTOM OF STRUCTURE ON BOTH SIDES.
→	TRAVEL DISTANCE
FEC	FIRE EXTINGUISHER CABINET

CODE COMPLIANCE PLAN

Texas Department of Transportation
125 E. 11th Street
Austin, Texas 78701-2483
(512) 416-3048

Copyright © 2009 Texas Department of Transportation

THIS DOCUMENT IS RELEASED FOR THE PURPOSE OF INFORMATION ONLY
NOT FOR REGULATORY APPROVAL, PERMITTING, OR CONSTRUCTION.

EDCOUCH MAINTENANCE FACILITY
HIDALGO COUNTY, EDCOUCH TEXAS
PHARR DISTRICT

Revisions

Drawn by: RB/EE

Project No.

Date 05-26-2009

Sheet No. A2.0

of 28 sheets

NOTE: THIS DRAWING WAS CREATED FOR PRODUCTION ON SHEET SIZE 24"x36". DO NOT SCALE PRINTS.

CADFILE: T:\MNTFM\D02FTW\...\Arch\684_A2_0.dwg Plotted: Fri. Aug. 07, 2009 @ 11:06 AM By: MBAZAN

KEY NOTES:

1. PIPE BOLLARD. SEE DETAIL 7/A1.2.
2. PRE-FINISHED DOWNSPOUT.
3. EYE SHOWER AND FLOOR DRAIN. REFER TO PLIMBING DWGS.
4. 6' WIDE CONCRETE SIDEWALK. REFER TO CIVIL DRAWINGS.
5. ICE MACHINE BY OWNER (N.I.C.)
6. STEEL COLUMNS. REFER TO STRUCTURAL DRAWINGS.
7. REFRIGERATOR BY OWNER (N.I.C.)
8. ALUMINUM LOUVER - REFER TO MECHANICAL AND ARCH DWGS.
9. MARBLE TRESHOLD @ DOOR 107 & 109A
10. LOCKERS. REFER TO SPECS.
11. FUTURE LOCKERS, NOT IN CONTRACT (N.I.C)
12. HOOKS. REFER TO SPECS & ENLARGED PLAN
13. FIXED BENCH. REFER TO SPECS & ENLARGED PLAN
14. ELECTRICAL PANELS. REFER TO ELECTRICAL DRAWINGS.
15. CHAIN LINK FENCE & GATE. REFER TO DETAIL 5/A1.3
16. 6" STUD WALL
17. FUEL CONTROL PANEL.
18. WATER STORAGE TANK-BY TXDOT (N.I.C.)
19. LIFT. - BY TXDOT (N.I.C.)
20. WATER WELL - BY TXDOT (N.I.C.)
21. ½"X4'X8' CDX PLYWOOD WITH STUD BLOCKING
22. AQUA TOUGH GYP. BD. FULL HT. @ ALL THREE SIDES
23. FURR OUT GWB @ COLS. @ OFFICE AREA
24. TS FRAMING - REFER TO EXT. ELEVATIONS & STRUCTURAL DWGS.
25. AIR COMPRESSOR - REFER TO PLUMBING DWGS.
26. EXHAUST FAN - REFER TO MECH. DWGS.
27. WALL PAC LIGHT FIXTURES - REFER TO EXT. ELEVATIONS & ELEC. DWGS.
28. 2'x6'x6" CONCRETE PAD

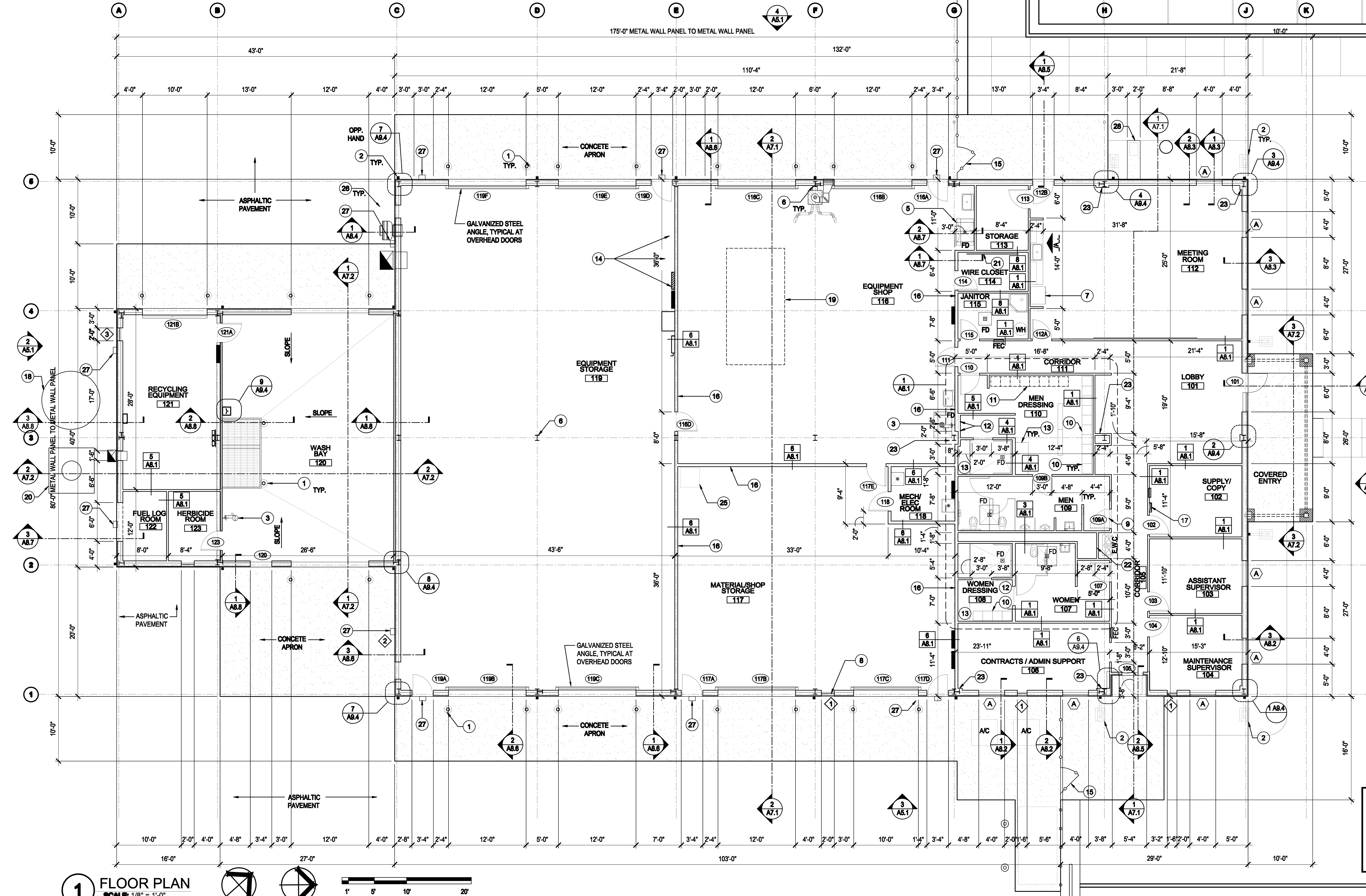

1 FLOOR PLAN
SCALE: 1/8" = 1'-0"

GENERAL NOTES:

1. DIMENSIONS ARE FROM FACE OF STUD OR METAL PANEL, OR SLAB EDGE.
2. CENTERLINE OF COLUMN TO OUTSIDE OF SLAB EDGE SUBJECT TO CHANGE AS PER METAL BUILDING MANUFACTURER.
3. SEE SHEET G1.1 FOR SYMBOL DESCRIPTIONS

BUILDING SUMMARY

OFFICE:	3600 S.F.
SHOP/STORAGE:	6960 S.F.
TRUCK WASH / UTILITY ROOM:	1720 S.F.
COVERED ENTRY PORCH:	260 S.F.
TOTAL SQ. FT. :	12, 540 S.F.

Texas Department of Transportation
125 E. 11th Street
Austin, Texas 78701-2483
(512) 416-3048
Copyright © 2005 Texas Department of Transportation

THIS DOCUMENT IS RELEASED FOR THE PURPOSE OF INFORMATION ONLY
NOT FOR REGULATORY APPROVAL, PERMITTING, OR CONSTRUCTION.

EDCOUCH MAINTENANCE FACILITY
HIDALGO COUNTY, EDCOUCH TEXAS PHARR DISTRICT

Revisions

Drawn by: RB/EE
Project No.
Date 05-26-2009
Sheet No.
A2.1
of 28 sheets

FLOOR PLAN MAINTENANCE FACILITY

NOTE: THIS DRAWING WAS CREATED FOR PRODUCTION ON SHEET SIZE. DO NOT SCALE PRINTS.

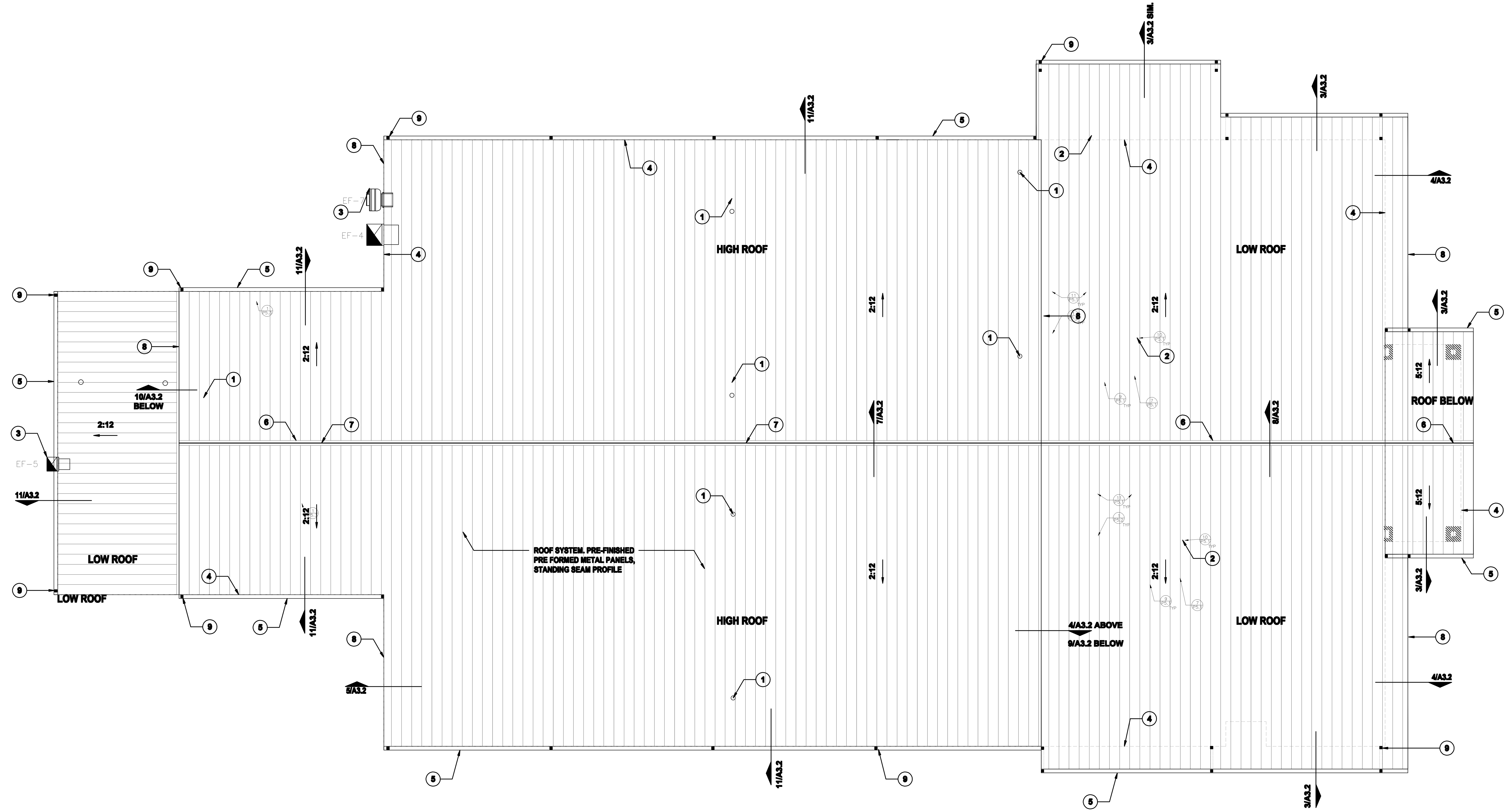

1 ROOF PLAN
SCALE: 1/8" = 1'-0"

PLAN NORTH

KEY NOTES:

1. OUTSIDE AIR INTAKE - REFER TO MECH. DWGS.
2. VENT THRU ROOF - REFER TO DTL. 1/A3.2
3. EXHAUST FAN - REFER TO MECH. DWGS.
4. EDGE OF BUILDING
5. 6" X 6" PRE-FABRICATED METAL ROOF GUTTER
6. RIDGE CAP - REFER TO DETAL 8/A3.2
7. RIDGE VENT - REFER TO DETAL 7/A3.2
8. RAKE FASCIA - REFER TO DETAL 4/A3.2
9. PRE-FINISHED DOWNSPOUT - TYPICAL

GENERAL NOTES:

1. GENERAL CONTRACTOR SHALL VERIFY LOCATION & QUANTITY OF PENETRATIONS W/ MECHANICAL & PLUMBING CONTRACTOR. WHERE POSSIBLE, PENETRATIONS SHOULD BE MADE FROM TOP OF ROOF DOWN TO AVOID PENETRATIONS NEXT TO OR ON TOP OF ROOF PANEL SEAMS.
2. HVAC SUBCONTRACTOR SHALL PROVIDE ROOF CURBS APPROVED BY ROOF MANUFACTURER. PROVIDE SHOP DRAWINGS OF ROOF CURBS. REFER TO DETAILS 3/A3.2 & MECHANICAL DWGS & SPECIFICATIONS.

ROOF PLAN

Texas Department of Transportation
125 E. 11th Street
Austin, Texas 78701-2483
(512) 416-3849

Copyright © 2005 Texas Department of Transportation

THIS DOCUMENT IS RELEASED FOR THE PURPOSE OF
INFORMATION ONLY
NOT FOR REGULATORY
APPROVAL, PERMITTING,
OR CONSTRUCTION.

EDCOUCH MAINTENANCE FACILITY
HIDALGO COUNTY, EDCOUCH TEXAS
PHARR DISTRICT

Revisions

Drawn by:
RB/EE
Project No.

Date
05-26-2009
Sheet No.

A3.1
of 28 sheets

NOTE: THIS DRAWING WAS CREATED FOR PRODUCTION ON 22" x 34" SHEET SIZE. DO NOT SCALE PRINTS.

CADFILE: T:\MNTFM\D02FTW\CBC4704-00-837\02-77-470400837\Acad\prototypical pdfs\edcouch\Acad\Arch\684_A3_1.dwg Plotted: Fri. Aug. 07, 2009 @ 11:08 AM By: MBAZAN

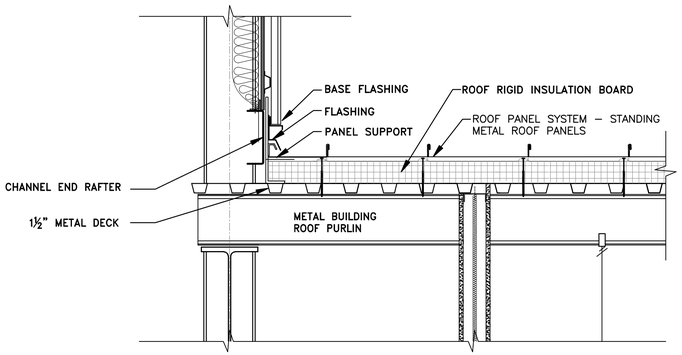

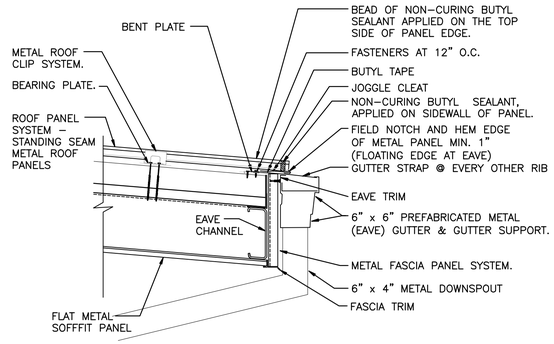

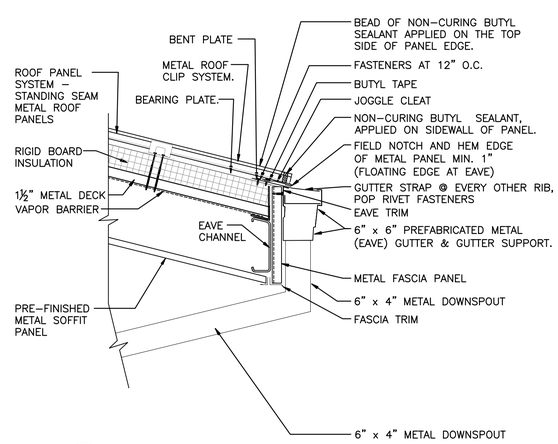

9 SIDEWALL / ROOF TRANSITION
SCALE: 1" = 1'-0"

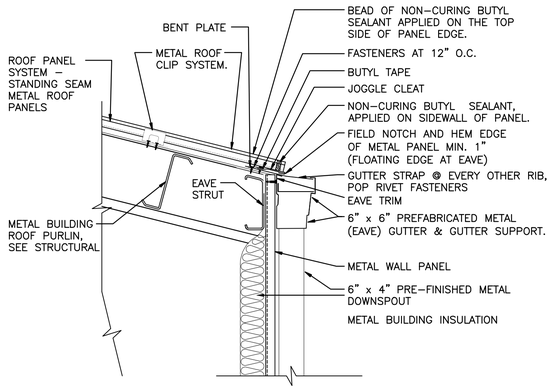

6 EAVE DETAIL
SCALE: 1" = 1'-0"

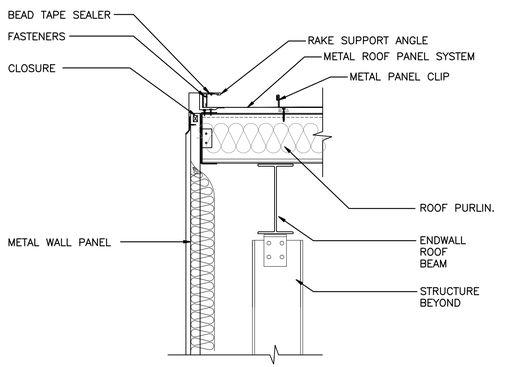

3 EAVE DETAIL AT OFFICE
SCALE: 1" = 1'-0"

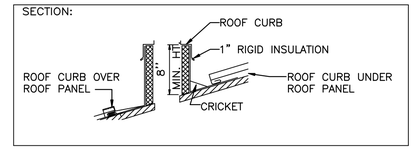

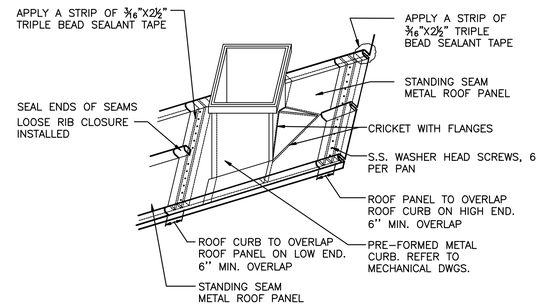

2 CURB DETAIL (BY METAL BM)
SCALE: N.T.S.

11 EAVE DETAIL
SCALE: 1" = 1'-0"

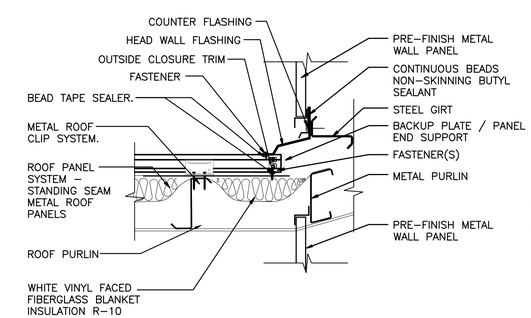

8 RIDGE CAP DETAIL
SCALE: 1" = 1'-0"

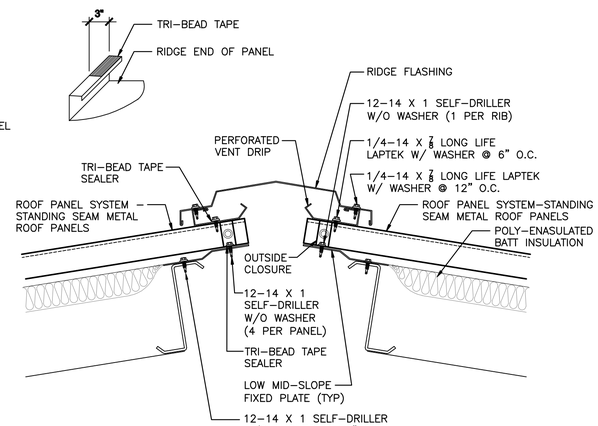

5 RAKE DETAIL
SCALE: 1" = 1'-0"

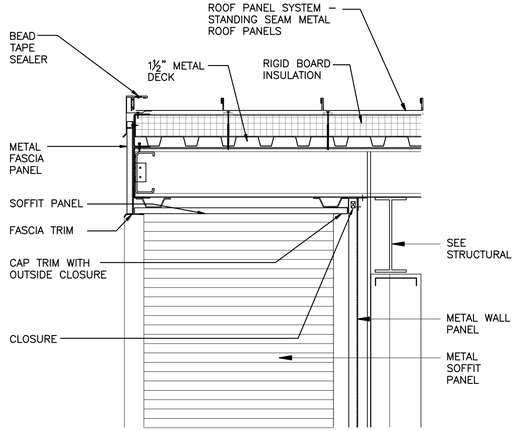

1 VTR (VENT THROUGH ROOF) DETAIL
SCALE: N.T.S.

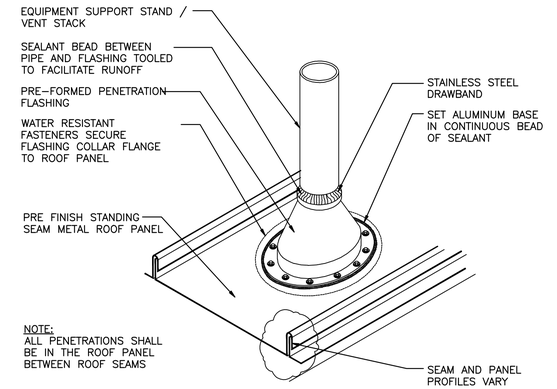

10 SIDEWALL / ROOF TRANSITION
SCALE: 1"=1'-0"

7 RIDGE VENT DETAIL
SCALE: N.T.S

4 RAKE DETAIL
SCALE: 1"=1'-0"

ROOF DETAILS

NOTE: THIS DRAWING WAS CREATED FOR PRODUCTION ON 22" x 34" SHEET SIZE. DO NOT SCALE PRINTS.

Texas Department of Transportation
125 E. 11th Street
Austin, Texas 78701-2483
(512) 416-2000
Copyright © 2005 Texas Department of Transportation

THIS DOCUMENT IS RELEASED FOR THE PURPOSE OF
INFORMATION ONLY
NOT FOR REGULATORY
APPROVAL, PERMITTING,
OR CONSTRUCTION.

EDCOUCH
MAINTENANCE FACILITY
HIDALGO COUNTY, EDCOUCH TEXAS
PHARR DISTRICT

Revisions

Drawn by:
RB/EE
Project No.

Date
05-26-2009
Sheet No.

A3.2
of 28 sheets

CADFILE: T:\MNTFM\D20\FTW\C9C-0704-00-837\D20-77-0704000837\Axsd\proj\dgn\pd\Mxdcount\Axsd\Arch\804_A3_2.dwg Plotted: Fri, Aug. 07, 2009 @ 11:39 AM By: MBAZAN

LEGEND:

- RETURN AIR DIFFUSER
- SUPPLY AIR DIFFUSER
- LIGHT FIXTURE. REFER TO ELECTRICAL DRAWINGS.
- EMERGENCY LIGHT FIXTURE. REFER TO ELECTRICAL DRAWINGS.
- 2'X2' SUSPENDED ACOUSTICAL CEILING GRID
- RECESSED LIGHT FIXTURE
- LIGHT FIXTURE. REFER TO ELECTRICAL DRAWINGS.
- EXIT LIGHT. REFER TO ELECTRICAL DWGS.
- SOFFIT LIGHT FIXTURE. REFER TO ELECTRICAL DRAWINGS.
- GYP BOARD.
- METAL SOFFIT PANELS

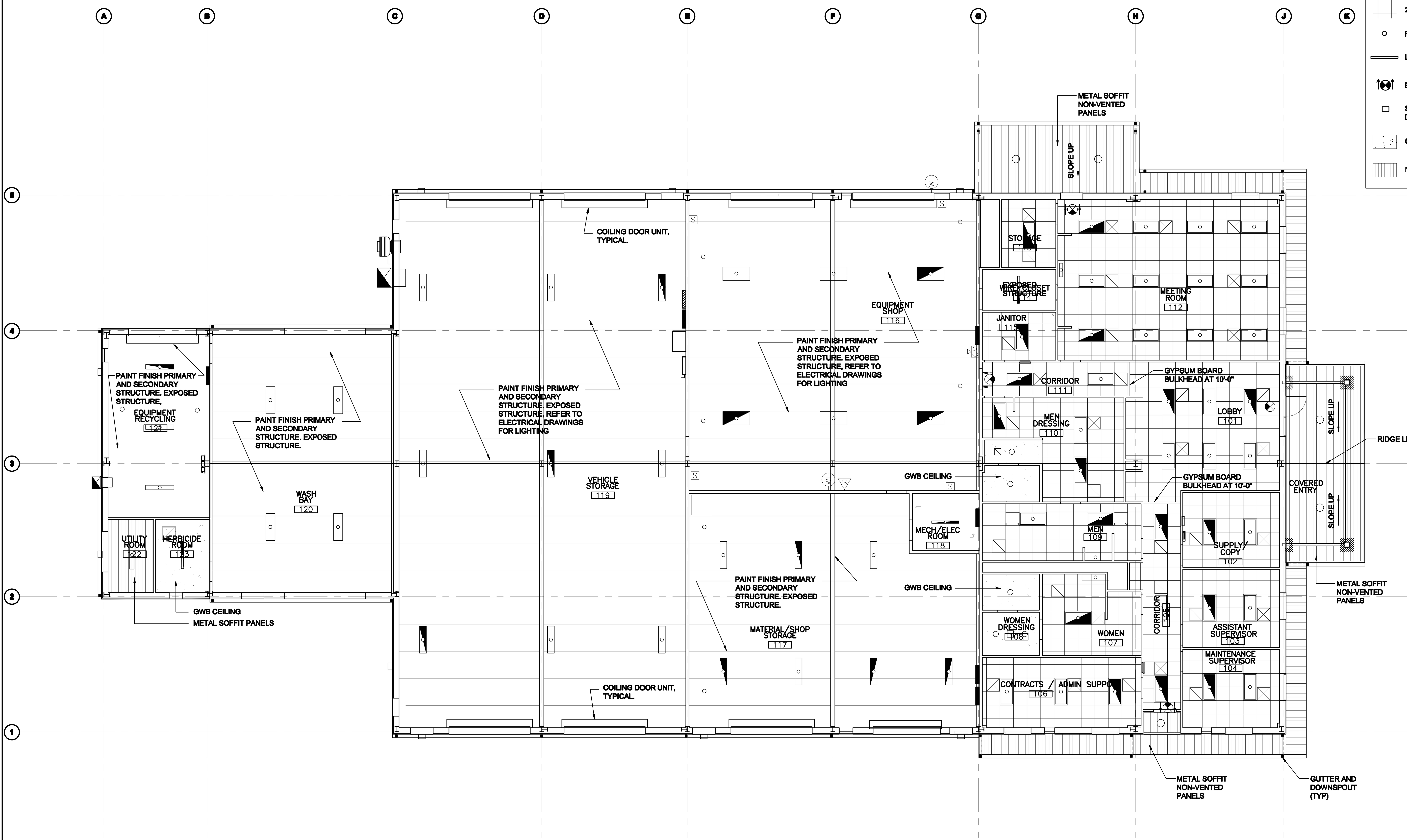

1 REFLECTED CEILING PLAN
SCALE: 1/8" = 1'-0"

PLAN NORTH

Texas Department of Transportation
125 E. 11th Street
Austin, Texas 78701-2483
(512) 416-2048

Copyright © 2005 Texas Department of Transportation

THIS DOCUMENT IS RELEASED FOR THE PURPOSE OF INFORMATION ONLY
NOT FOR REGULATORY APPROVAL, PERMITTING, OR CONSTRUCTION.

EDCOUCH MAINTENANCE FACILITY
HIDALGO COUNTY, EDCOUCH TEXAS
PHARR DISTRICT

Revisions

Drawn by: RB/EE
Project No.
Date 05-26-2009
Sheet No.
A4.1
of 28 sheets

REFLECTED CEILING PLAN MAINTENANCE FACILITY

NOTE: THIS DRAWING WAS CREATED FOR PRODUCTION ON 22" x 34" SHEET SIZE. DO NOT SCALE PRINTS.

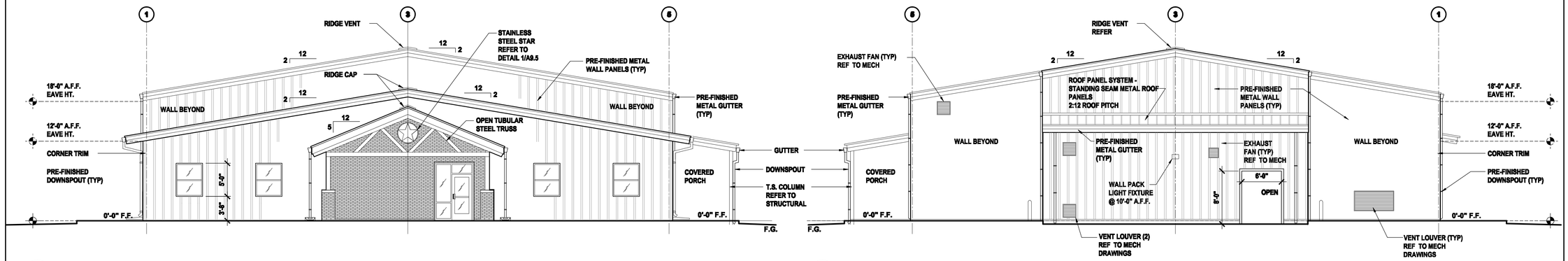

1 NORTH ELEVATION
SCALE: 1/8" = 1'-0"

2 SOUTH ELEVATION
SCALE: 1/8" = 1'-0"

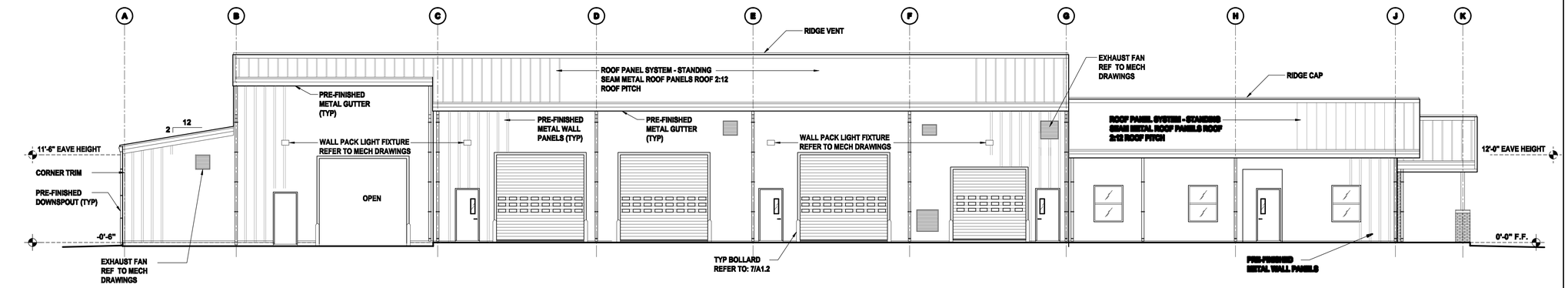

3 EAST ELEVATION
SCALE: 1/8" = 1'-0"

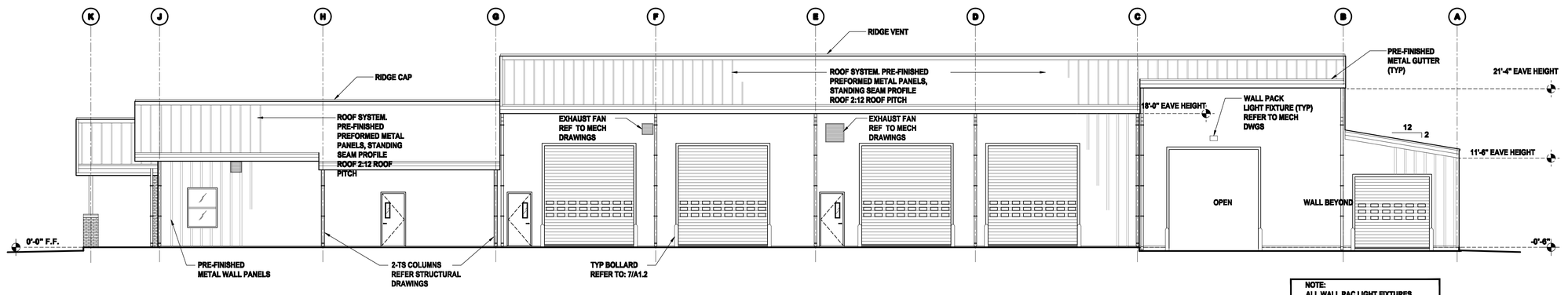

4 WEST ELEVATION
SCALE: 1/8" = 1'-0"

NOTE:
ALL WALL PAC LIGHT FIXTURES @ 14'-0" A.F.F. TO BOTTOM OF LIGHT FIXTURE UNLESS NOTED OTHERWISE

ELEVATIONS MAINTENANCE FACILITY

NOTE: THIS DRAWING WAS CREATED FOR PRODUCTION ON 22" x 34" SHEET SIZE. DO NOT SCALE PRINTS.

CADFILE: T:\MNTFM\DGF\WC9C4704-00-837\02-77-4704008371\acad\pw\cdsytpl\tpl pdf\edcouch\Acad\Arch\ISO4_A5_1.dwg Plotted: Fri, Aug. 07, 2009 @ 11:39 AM By: MBAZAN

Texas Department of Transportation
125 E. 11th Street
Austin, Texas 78701-2483
(512) 416-2000
Copyright © 2009 Texas Department of Transportation

THIS DOCUMENT IS RELEASED FOR THE PURPOSE OF
INFORMATION ONLY
NOT FOR REGULATORY
APPROVAL, PERMITTING,
OR CONSTRUCTION.

EDCOUCH
MAINTENANCE FACILITY
HIDALGO COUNTY, EDCOUCH TEXAS
PHARR DISTRICT

Revisions

Drawn by:
RB/EE
Project No.

Date
05-26-2009
Sheet No.

A5.1
of 28 sheets

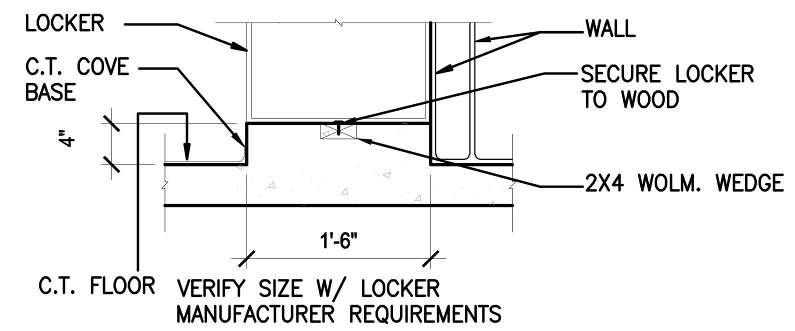

5 BASE AT LOCKERS
SCALE: 3/4" = 1'-0"

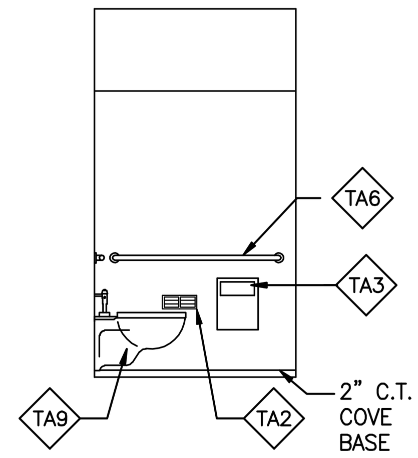

4 WOMEN
SCALE: 1/4" = 1'-0"

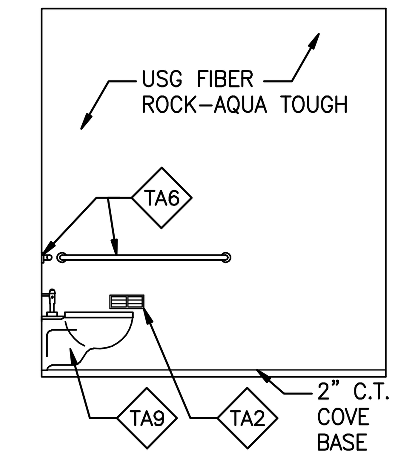

3 MEN
SCALE: 1/4" = 1'-0"

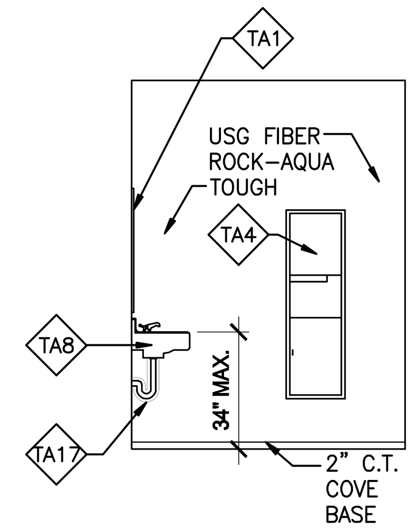

2 MEN & WOMEN
SCALE: 1/4" = 1'-0"

NOTE: INSTALL PLUMBING PER ADA & TAS COMPLIANCE. REFER TO SHEET G1.2 FOR ADA MOUNTING HEIGHTS

NOTE: PROVIDE WOOD BLOCKING BETWEEN STUDS TO SUPPORT LAVATORY

TA_ TOILET ACCESSORIES SCHEDULE / KEY NOTES

TA1 – 24" X 36" MIRROR. BOTTOM EDGE MOUNTED 40" A.F.F.
TA2 – DOUBLE ROLL TOILET TISSUE DISPENSER – 24" A.F.F.
TA3 – SANITARY NAPKIN DISPOSAL – 24" A.F.F.
TA4 – SEMI-RECESSED PAPER TOWEL DISPENSER – 54" A.F.F. TO TOP OF DISPENSER OPENING
TA5 – SOAP DISPENSER @ 44" AFF
TA6 – TOILET GRAB BARS – 34" A.F.F. 36" LONG AT REAR, 42" LONG ON SIDE LOCATED 12" MAX FROM REAR WALL.
TA7 – FULL HEIGHT CERAMIC TILE OVER USG FIBER ROCK-AQUA TOUGH
TA8 – WALL MOUNTED LAVATORY – 34" A.F.F.
TA9 – WALL MOUNTED WATER CLOSET – 17"–19" A.F.F.
TA10– WALL MOUNTED URINAL –17" MAX. A.F.F.
TA11– URINAL SCREEN – 21" DEEP
TA12– CURTAIN AND ROD
TA13– 24"x 60" FIXED TO WALL BENCH ON 4 PEDESTALS
TA14– 18"X18"X72" LOCKERS ON 4" HIGH CONCRETE CURB
TA15– 2–9"X48" FIXED BENCH ON PEDESTALS
TA16– CLOTHES HOOK @ 48" AFF MAX.
TA17– PROTECTIVE COVERS OVER PLUMBING DRAIN
TA18– SHOWER GRAB BAR @ 34" A. F. F.
TA19– ELECTRIC WATER COOLER (EWC) – HIGH AND LOW COMBINATION
TA20– FUTURE LOCKERS – N.I.C.
TA21– TOILET PARTITIONS
TA22– 24"x 48" FIXED TO WALL BENCH ON 4 PEDESTALS

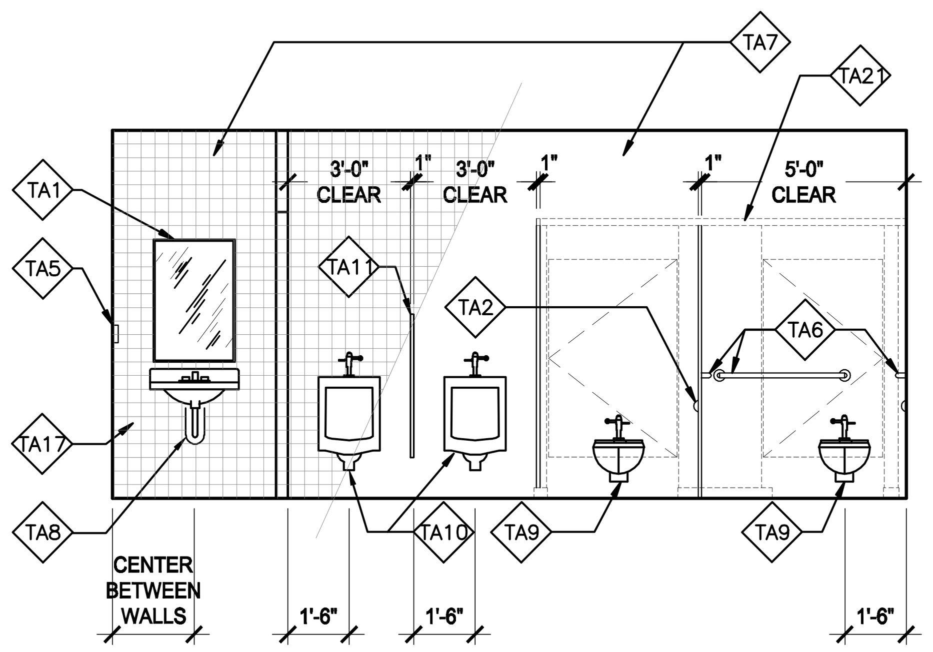

8 MEN - ELEVATION
SCALE: 1/4" = 1'-0"

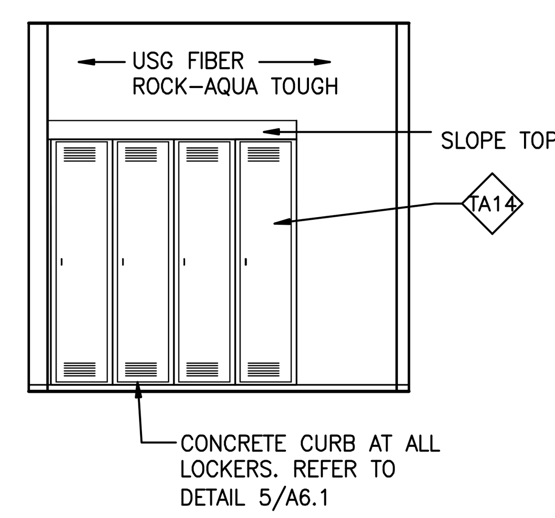

7 WOMEN DRESSING
SCALE: 1/4" = 1'-0"

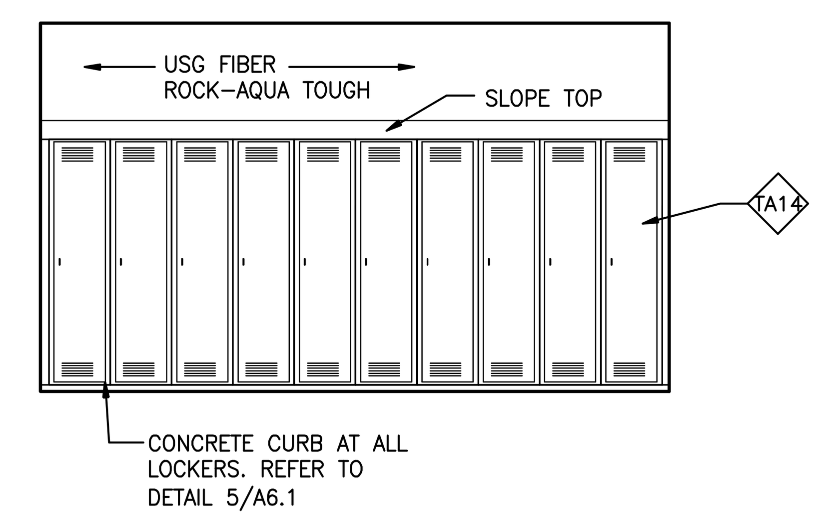

6 MEN DRESSING
SCALE: 1/4" = 1'-0"

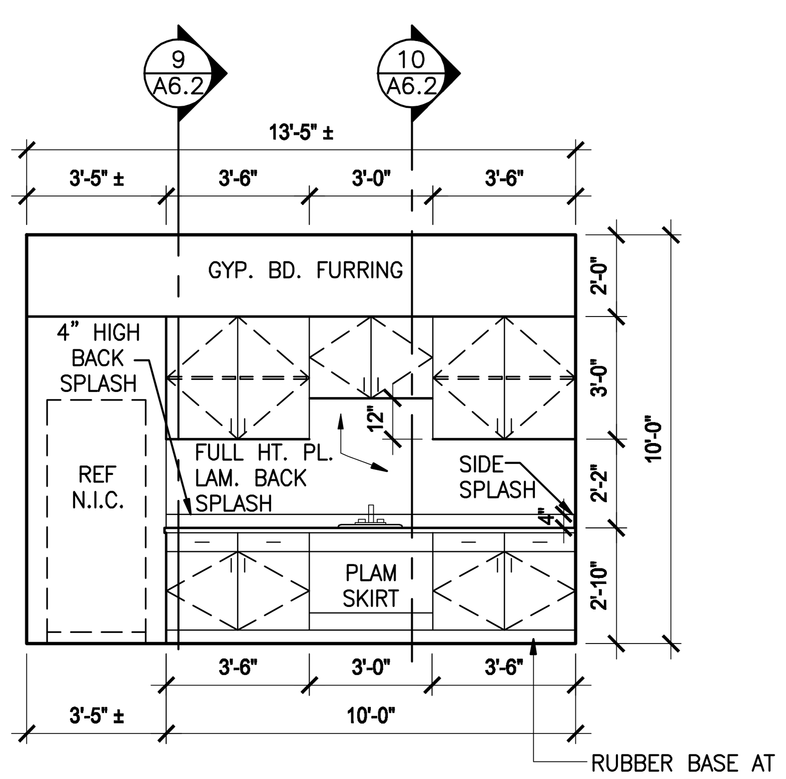

12 ELEVATION MTG ROOM 112
SCALE: 1/4" = 1'-0"

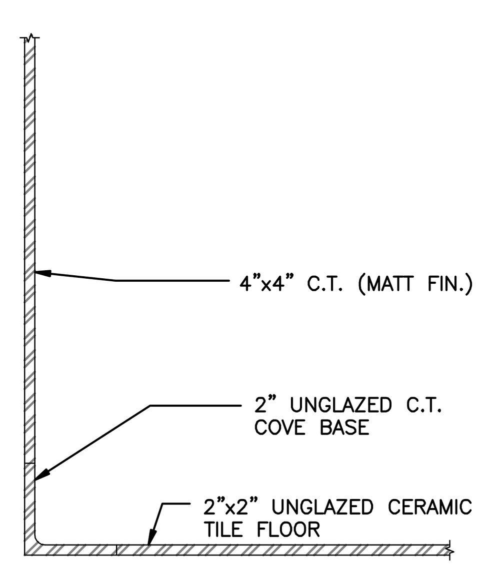

11 C.T. COVE BASE
SCALE: 3" = 1'-0"

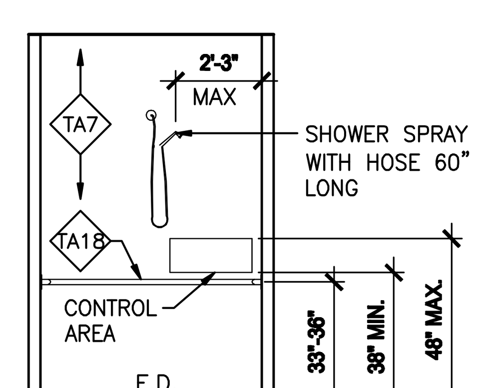

10 WOMEN - ELEVATION
SCALE: 1/4" = 1'-0"

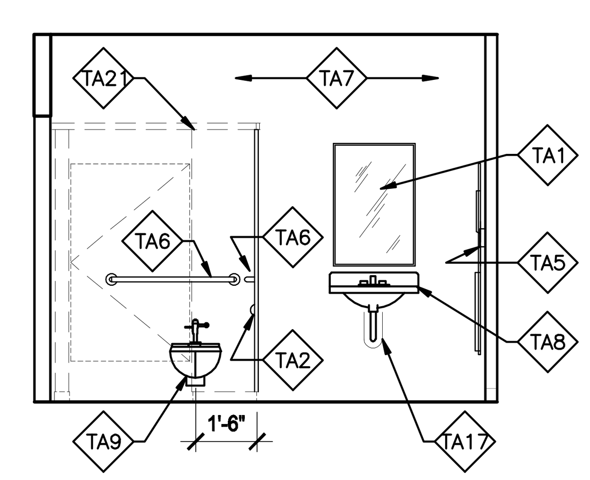

9 WOMEN - ELEVATION
SCALE: 1/4" = 1'-0"

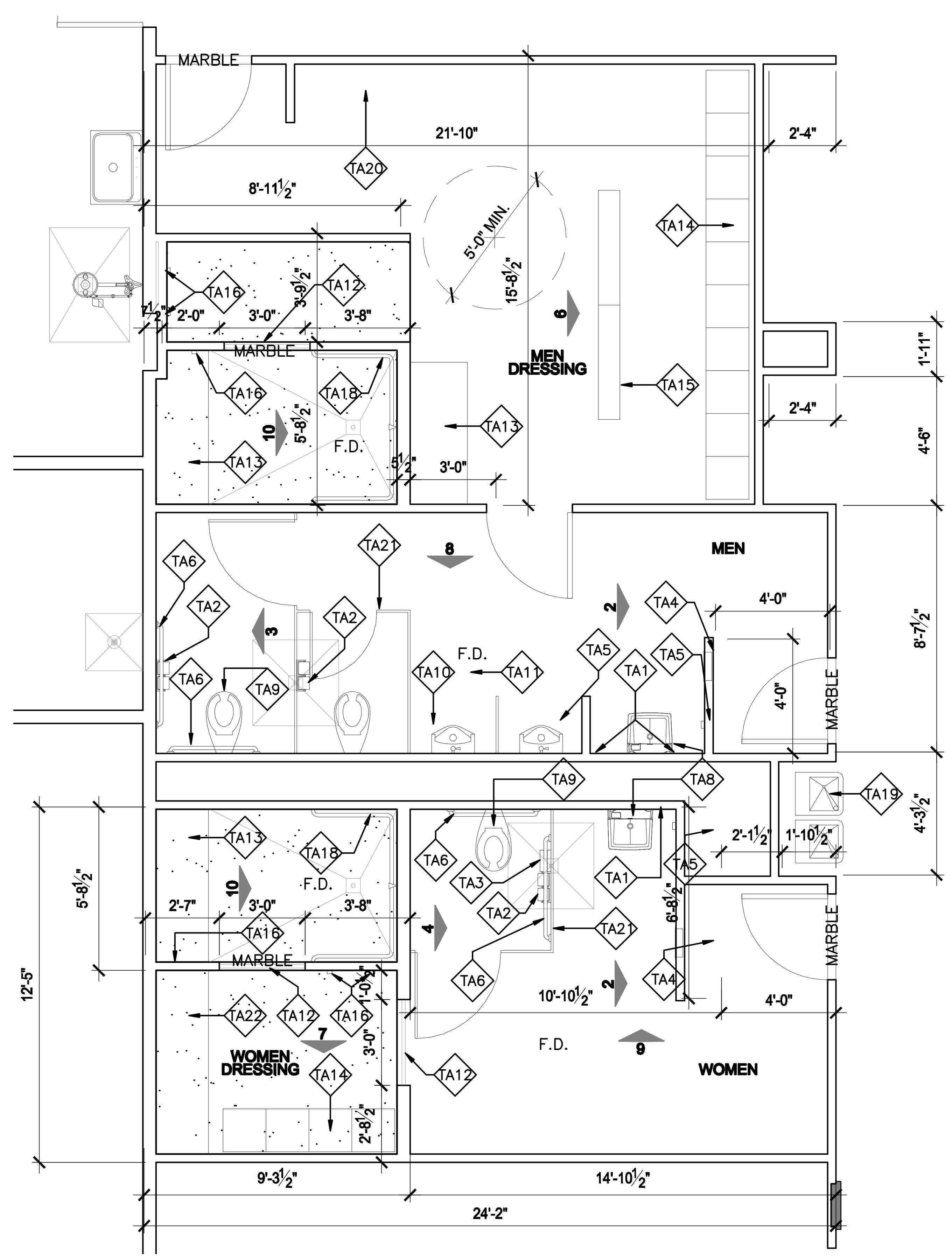

1 ENLARGED FLOOR PLAN
SCALE: 1/4" = 1'-0"

TOILETS & CABINETS - PLANS & ELEVATIONS

NOTE: THIS DRAWING WAS CREATED FOR PRODUCTION ON 22" x 34" SHEET SIZE. DO NOT SCALE PRINTS.

CADFILE: T:\MNTFM\D02FTWCBC4704-00-537\02-77-47040037\Acad\prototypical pdfs\edcouch\Acad\Arch\684_A6_1.dwg Plotted: Fri. Aug. 07, 2009 @ 11:10 AM By: MBAZAN

Texas Department of Transportation
125 E. 11th Street
Austin, Texas 78701-2483
(512) 416-3048
Copyright © 2005 Texas Department of Transportation

THIS DOCUMENT IS RELEASED FOR THE PURPOSE OF
INFORMATION ONLY
NOT FOR REGULATORY APPROVAL, PERMITTING, OR CONSTRUCTION.

EDCOUCH MAINTENANCE FACILITY
HIDALGO COUNTY, EDCOUCH TEXAS
PHARR DISTRICT

Revisions

Drawn by: RB/EE
Project No.
Date 05-26-2009
Sheet No.
A6.1
of 28 sheets

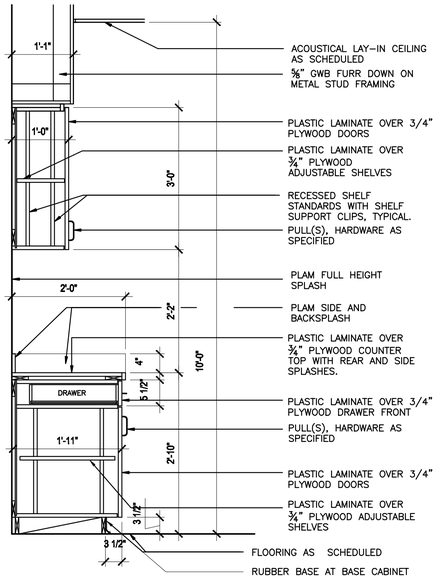

9 **SECTION**
SCALE: 3/4" = 1'-0"

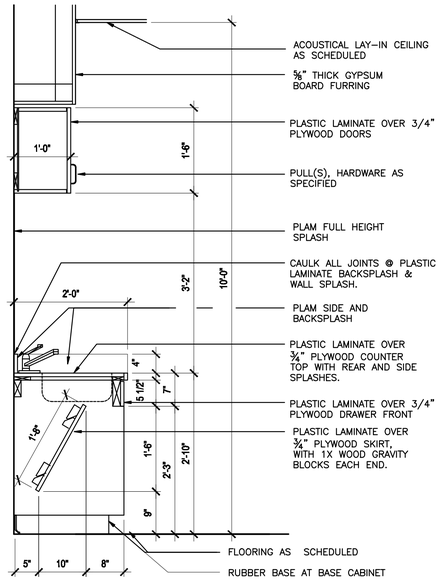

10 **SECTION**
SCALE: 3/4" = 1'-0"

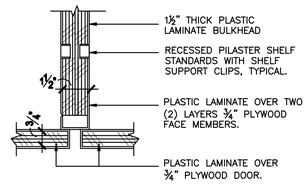

3 **ENLARGED DETAIL**
SCALE: 3" = 1'-0"

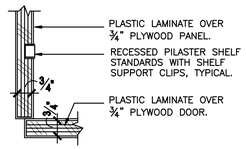

2 **ENLARGED DETAIL**
SCALE: 3" = 1'-0"

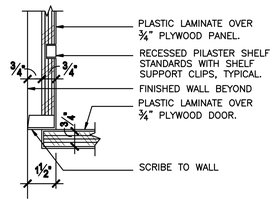

1 **ENLARGED DETAIL**
SCALE: 3" = 1'-0"

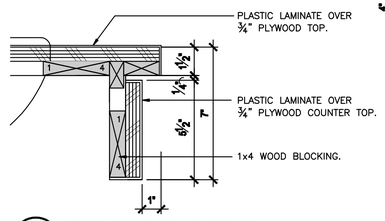

5 **ENLARGED DETAIL**
SCALE: 3" = 1'-0"

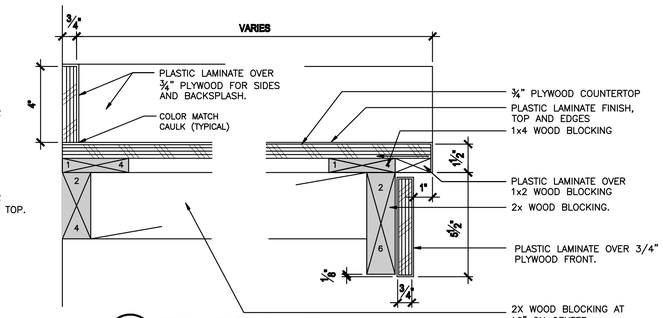

4 **ENLARGED DETAIL**
SCALE: 3" = 1'-0"

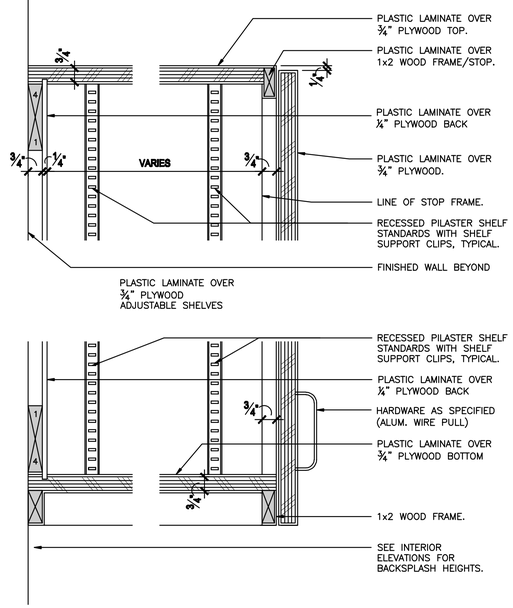

8 **ENLARGED DETAIL**
SCALE: 3" = 1'-0"

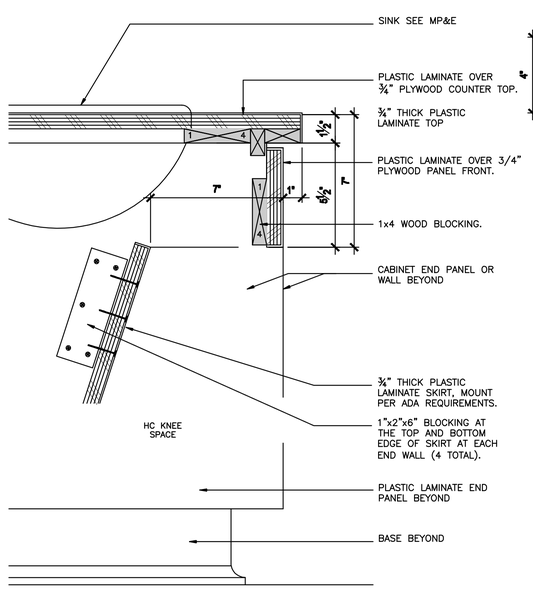

7 **ENLARGED DETAIL**
SCALE: 3" = 1'-0"

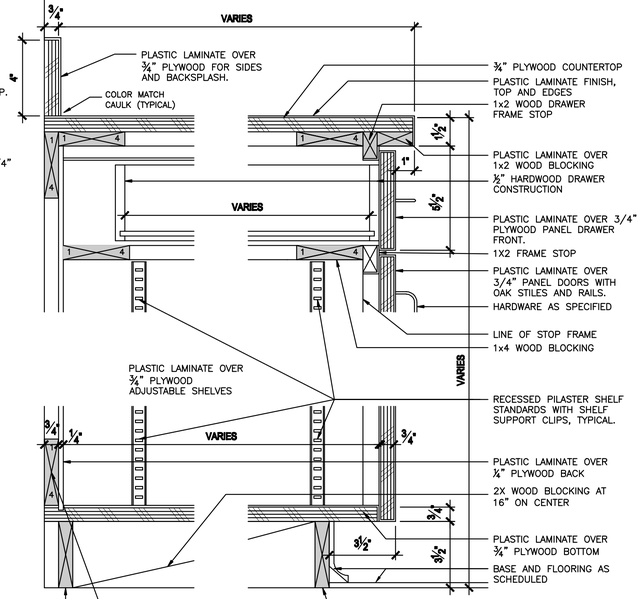

6 **ENLARGED DETAIL**
SCALE: 3" = 1'-0"

MILLWORK DETAILS

NOTE: THIS DRAWING WAS CREATED FOR PRODUCTION ON 22" x 34" SHEET SIZE. DO NOT SCALE PRINTS.

Texas Department of Transportation
125 E. 11th Street
Austin, Texas 78701-2483
(512) 416-2000

Copyright © 2005 Texas Department of Transportation

THIS DOCUMENT IS RELEASED FOR THE PURPOSE OF
INFORMATION ONLY
NOT FOR REGULATORY
APPROVAL, PERMITTING,
OR CONSTRUCTION.

EDCOUCH MAINTENANCE FACILITY
HIDALGO COUNTY, EDCOUCH TEXAS
PHARR DISTRICT

Revisions

Drawn by: RB/EE
Project No.

Date
05-26-2009
Sheet No.

A6.2
of 28 sheets

CADFILE: T:\MAINTFAD\02FTWO\CSC\4704-00-037\03-77-4704003577\Assets\projects\plot\edcouch\Xcad\Archit894_A6_2.dwg Plotted: Fri, Aug. 07, 2009 @ 11:10 AM By: MBAZAN

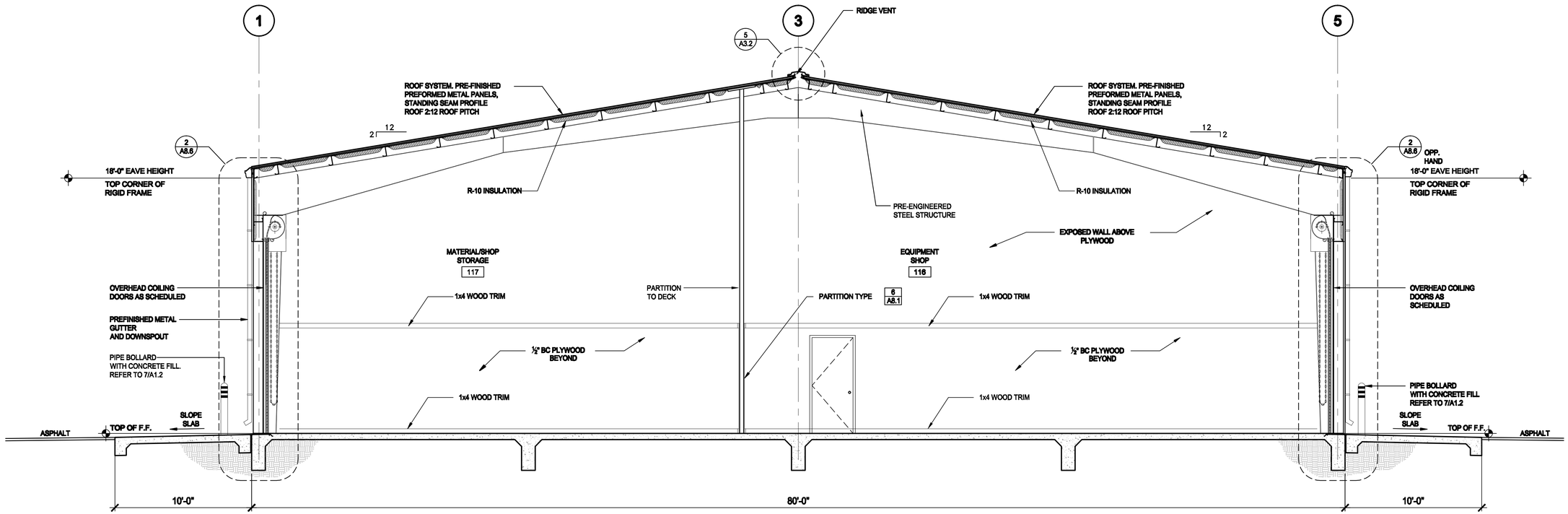

2 BUILDING SECTION SHOP/STORAGE
SCALE: 1/4" = 1'-0"

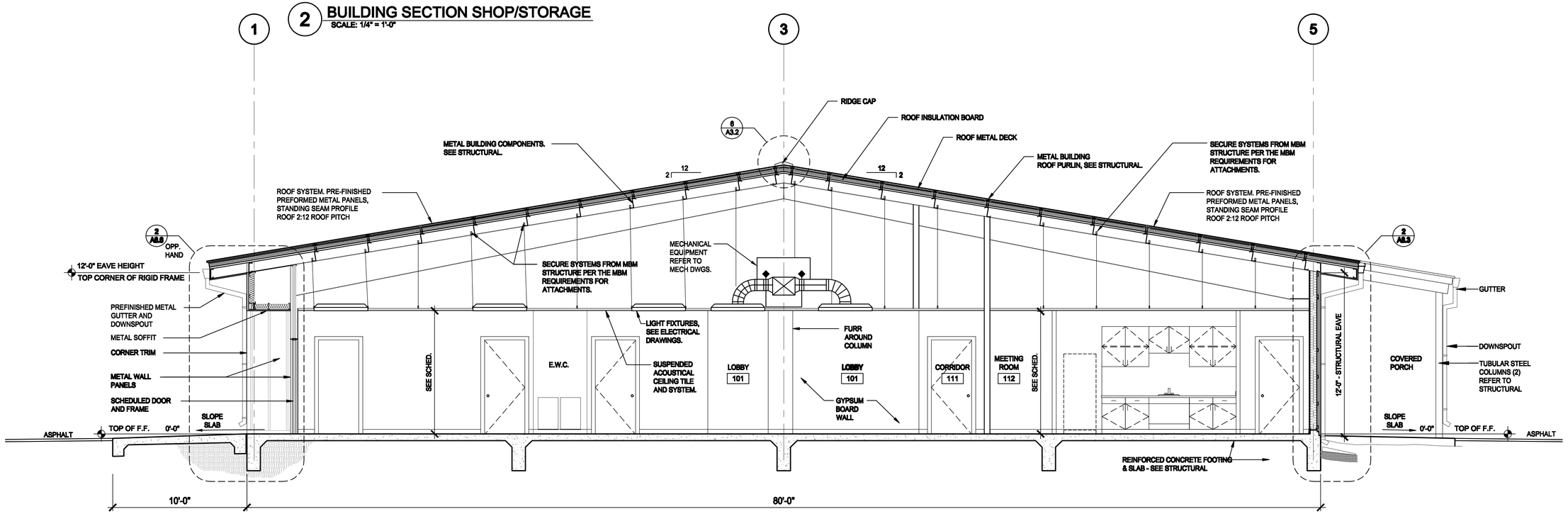

1 BUILDING SECTION OFFICE
SCALE: 1/4" = 1'-0"

BUILDING SECTIONS

NOTE: THIS DRAWING WAS CREATED FOR PRODUCTION ON 22" x 34" SHEET SIZE. DO NOT SCALE PRINTS.

Texas Department of Transportation
125 E. 11th Street
Austin, Texas 78701-2483
(512) 416-3000

Copyright © 2009 Texas Department of Transportation

THIS DOCUMENT IS RELEASED FOR THE PURPOSE OF
INFORMATION ONLY
NOT FOR REGULATORY
APPROVAL, PERMITTING,
OR CONSTRUCTION.

EDCOUCH
MAINTENANCE FACILITY
HIDALGO COUNTY, EDCOUCH TEXAS
PHARR DISTRICT

Revisions

Drawn by:
RB/EE
Project No.

Date
05-26-2009
Sheet No.

A7.1
of 28 sheets

CADFILE: T:\MNTFM\R025F1WC9C-0704-00-4307\03-7\7-0704000307\Arch\proto\plotsd pdf\edcouch\Arch\04_A7_1.dwg Plotted: Fri, Aug. 07, 2009 @ 11:11 AM By: MBAZAN

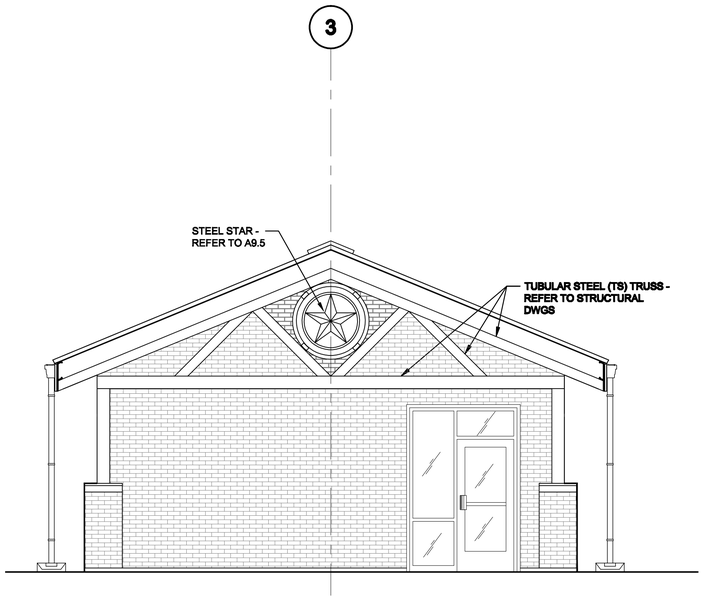

3 BUILDING SECTION AT COVERED ENTRY
SCALE: 1/4" = 1'-0"

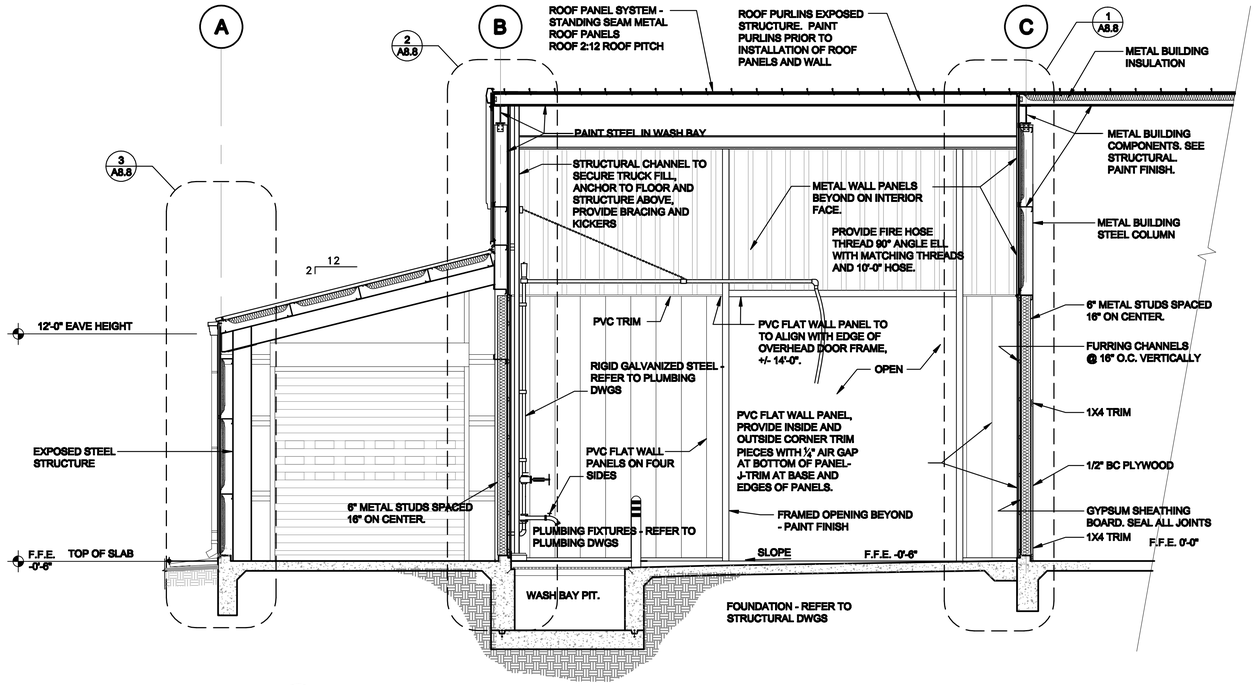

2 BUILDING SECTION AT WASH BAY
SCALE: 1/4" = 1'-0"

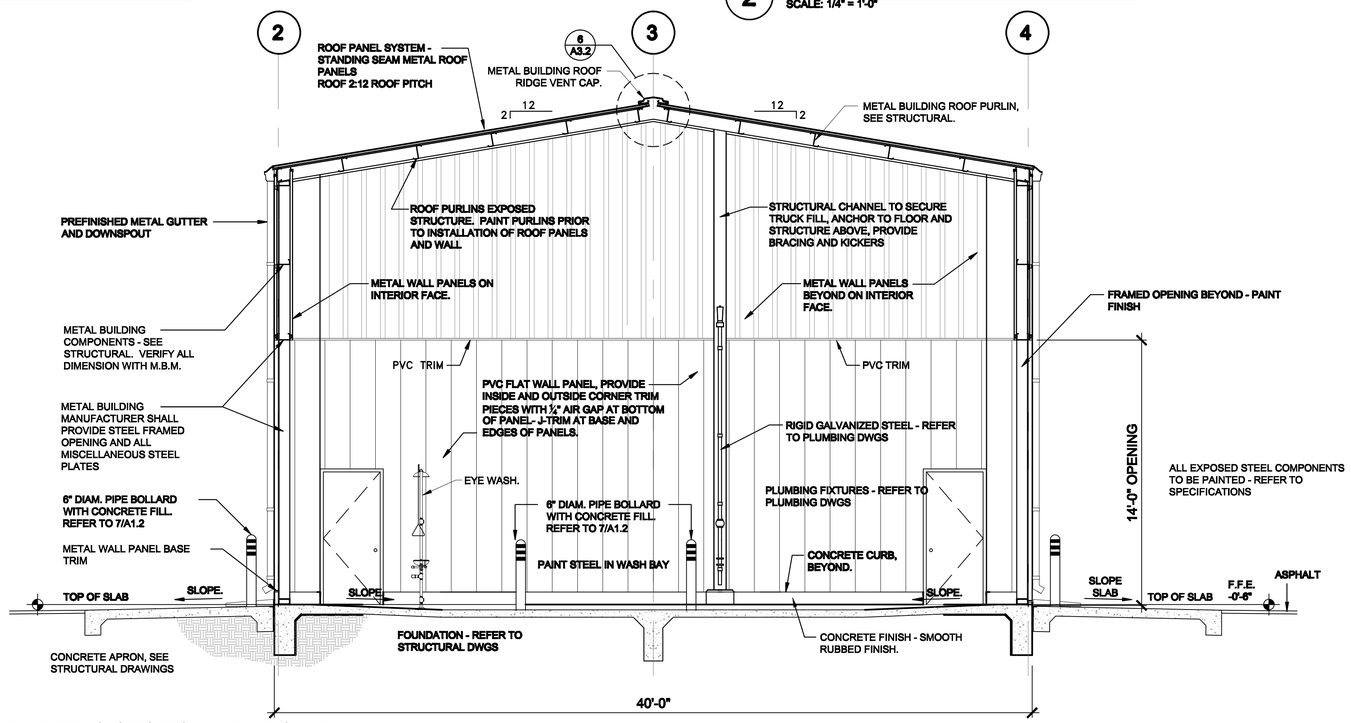

1 BUILDING SECTION AT WASH BAY
SCALE: 1/4" = 1'-0"

BUILDING SECTIONS

NOTE: THIS DRAWING WAS CREATED FOR PRODUCTION ON 22" x 34" SHEET SIZE. DO NOT SCALE PRINTS.

Texas Department of Transportation
125 E. 11th Street
Austin, Texas 78701-2483
(512) 416-2000
Copyright © 2005 Texas Department of Transportation

THIS DOCUMENT IS RELEASED FOR THE PURPOSE OF
INFORMATION ONLY
NOT FOR REGULATORY
APPROVAL, PERMITTING,
OR CONSTRUCTION.

EDCOUCH
MAINTENANCE FACILITY
HIDALGO COUNTY, EDCOUCH TEXAS
PHARR DISTRICT

Revisions

Drawn by: RB/EE
Project No.
Date 05-26-2009
Sheet No.
A7.2
of 28 sheets

CADFILE: T:\MNTFM\DOGFT\WCSC-0704-00-05\103-77-4704\00837\Acad\dynotx\dynbat\ pdfstedcouch\Acad\Arch\MS\4_A7_2.dwg Plotted: Fri, Aug. 07, 2009 @ 11:11 AM By: MBAZAN

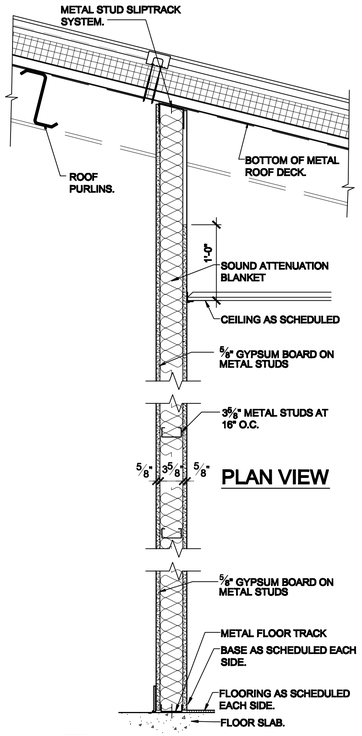

8

7 NOT USED

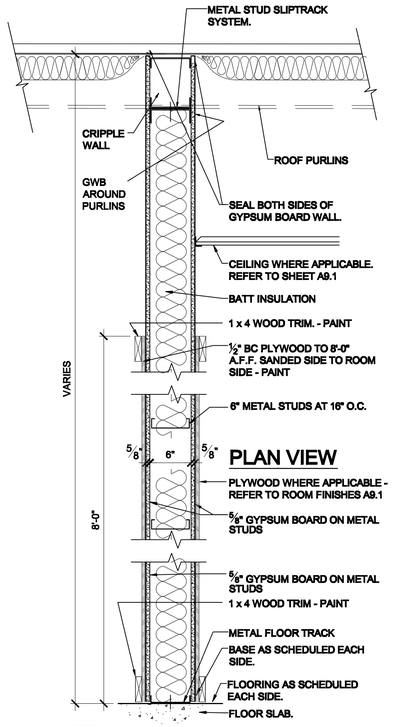

6 UL RATED 1 HOUR WALL.

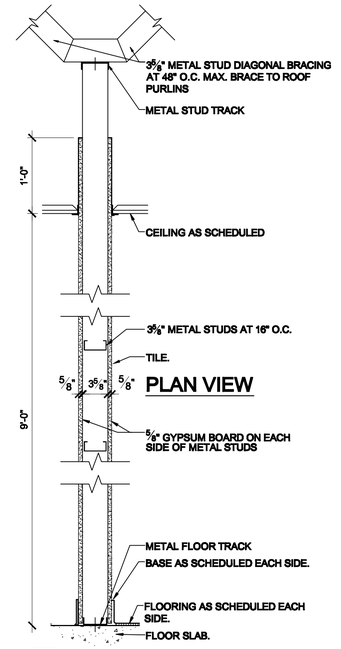

5

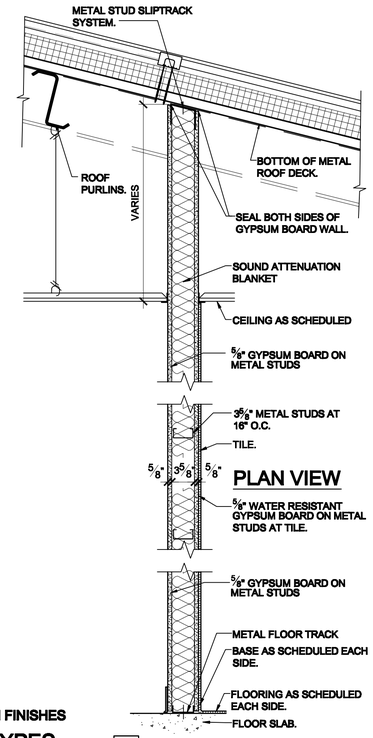

4

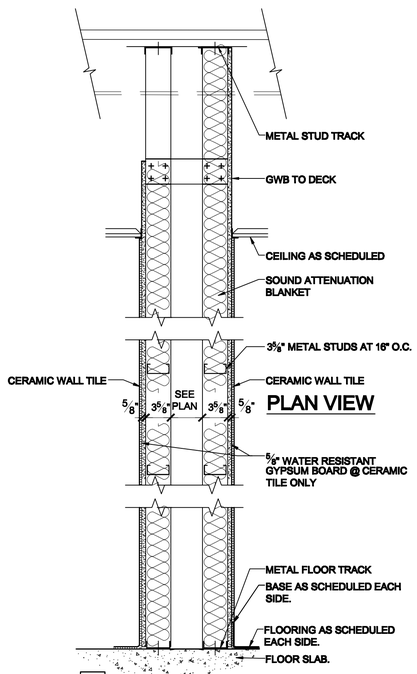

3

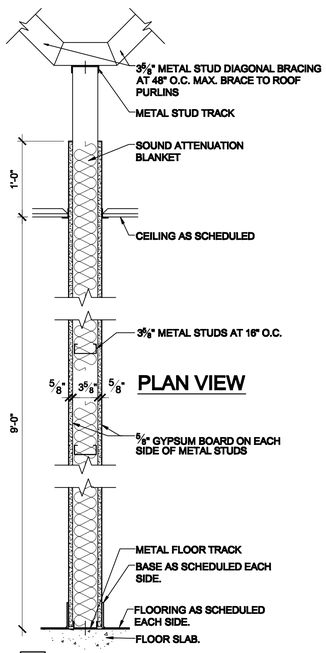

2

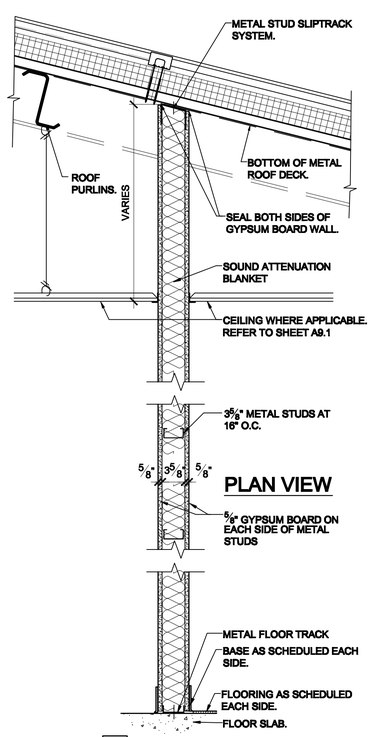

1

UL U465 - 1 HOUR

REFER TO SHEET A9.1 FOR ROOM FINISHES

1 ALL PARTITION TYPES
SCALE: 1" = 1'-0"

PARTITION TYPES

NOTE: THIS DRAWING WAS CREATED FOR PRODUCTION ON 22" x 34" SHEET SIZE. DO NOT SCALE PRINTS.

Texas Department of Transportation
125 E. 11th Street
Austin, Texas 78701-2483
(512) 416-3000
Copyright © 2005 Texas Department of Transportation

THIS DOCUMENT IS RELEASED FOR THE PURPOSE OF
INFORMATION ONLY
NOT FOR REGULATORY
APPROVAL, PERMITTING,
OR CONSTRUCTION.

EDCOUCH
MAINTENANCE FACILITY
HIDALGO COUNTY, EDCOUCH TEXAS
PHARR DISTRICT

Revisions

Drawn by:
JT

Project No.

Date
05-26-2009
Sheet No.

A8.1
of 28 sheets

CADFILE: T:\MAINT\M200\FTW\CBC\4704-00-837\03-77-4704003837\sad\pw\dgn\typical pdf\edcouch\Arch\804_A8_1.dwg Plotted: Fri, Aug. 07, 2009 @ 11:12 AM By: MBAZAN

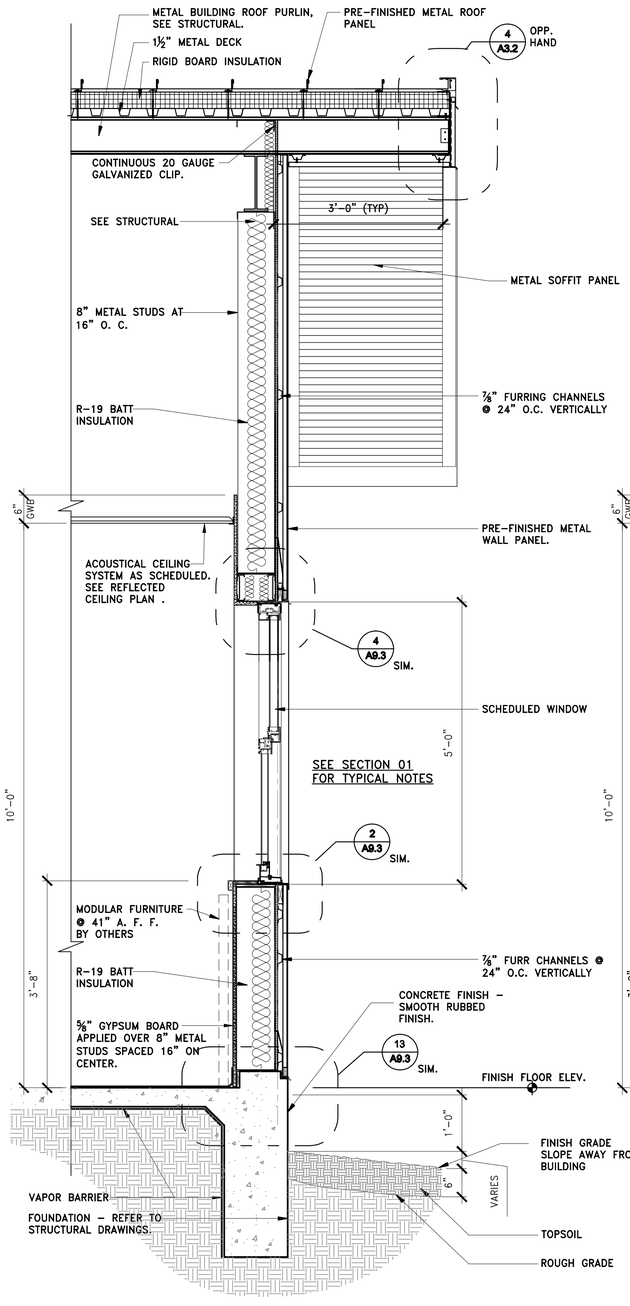

3 WALL SECTION -
SCALE: 3/4" = 1'-0"

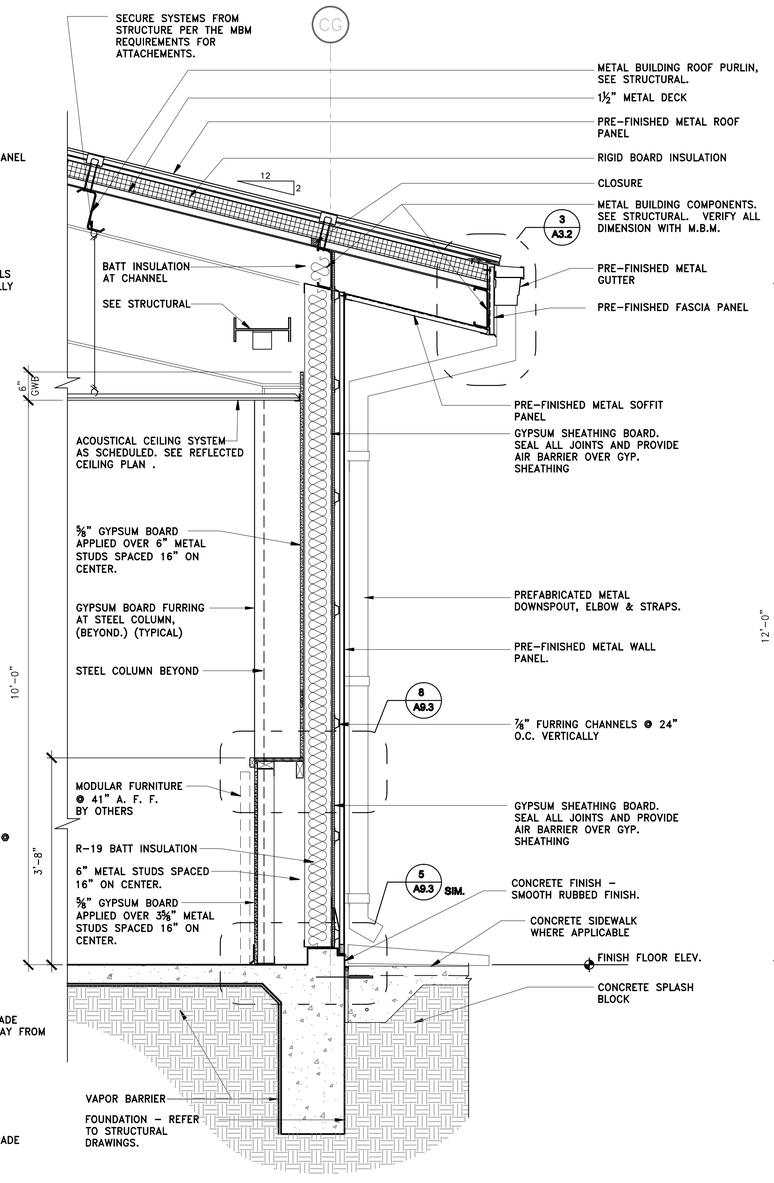

2 WALL SECTION -
SCALE: 3/4" = 1'-0"

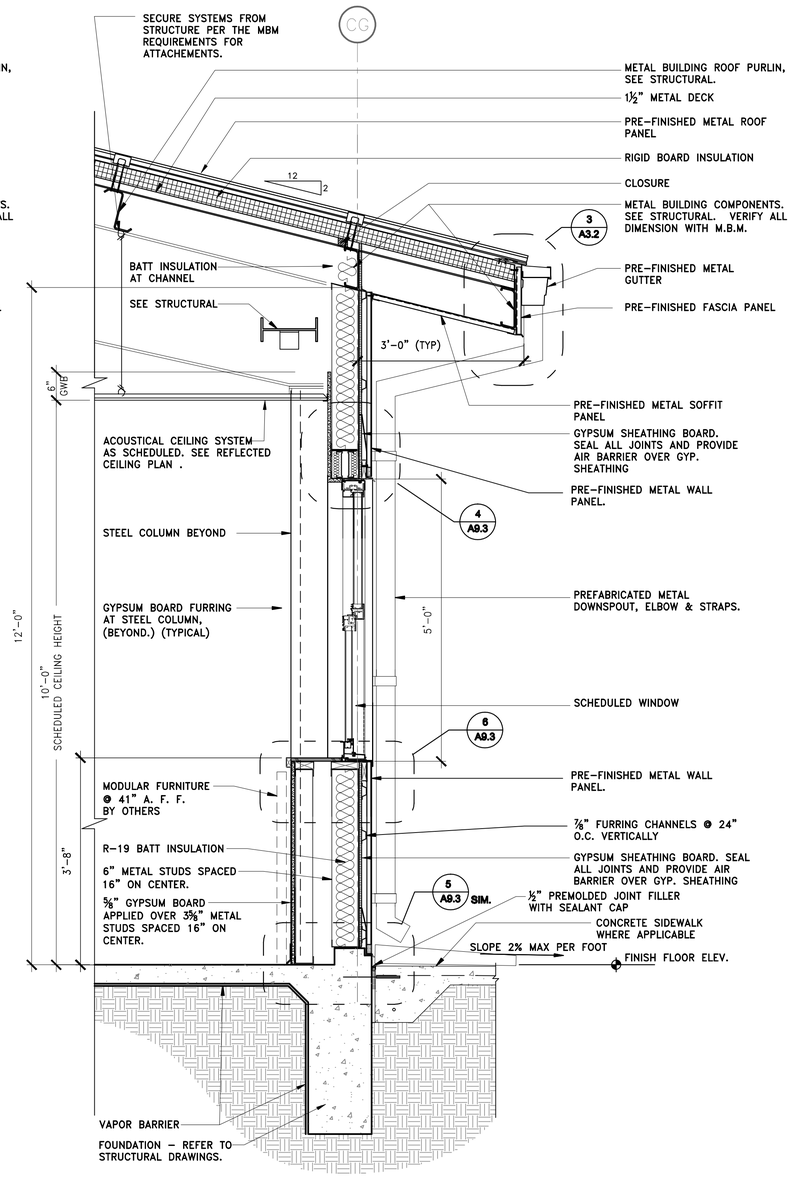

1 WALL SECTION -
SCALE: 3/4" = 1'-0"

WALL SECTIONS

NOTE: THIS DRAWING WAS CREATED FOR PRODUCTION ON 22" x 34" SHEET SIZE. DO NOT SCALE PRINTS.

Texas Department of Transportation
125 E. 11th Street
Austin, Texas 78701-2483
(512) 416-3048

Copyright © 2005 Texas Department of Transportation

THIS DOCUMENT IS RELEASED FOR THE PURPOSE OF
INFORMATION ONLY
NOT FOR REGULATORY
APPROVAL, PERMITTING,
OR CONSTRUCTION.

EDCOUCH MAINTENANCE FACILITY
HIDALGO COUNTY, EDCOUCH TEXAS
PHARR DISTRICT

Revisions

Drawn by: JT

Project No.

Date 05-26-2009

Sheet No.

A8.2

of 28 sheets

CADFILE: T:\ENTRADO\DFTW\CBC4704-00-057\03-77-4704000577\cad\rpvt\dgnfiles\cover\Arch\M04_A8_2.dwg Plotted: Fri, Aug. 07, 2009 @ 13:04 PM By: MBAZAN

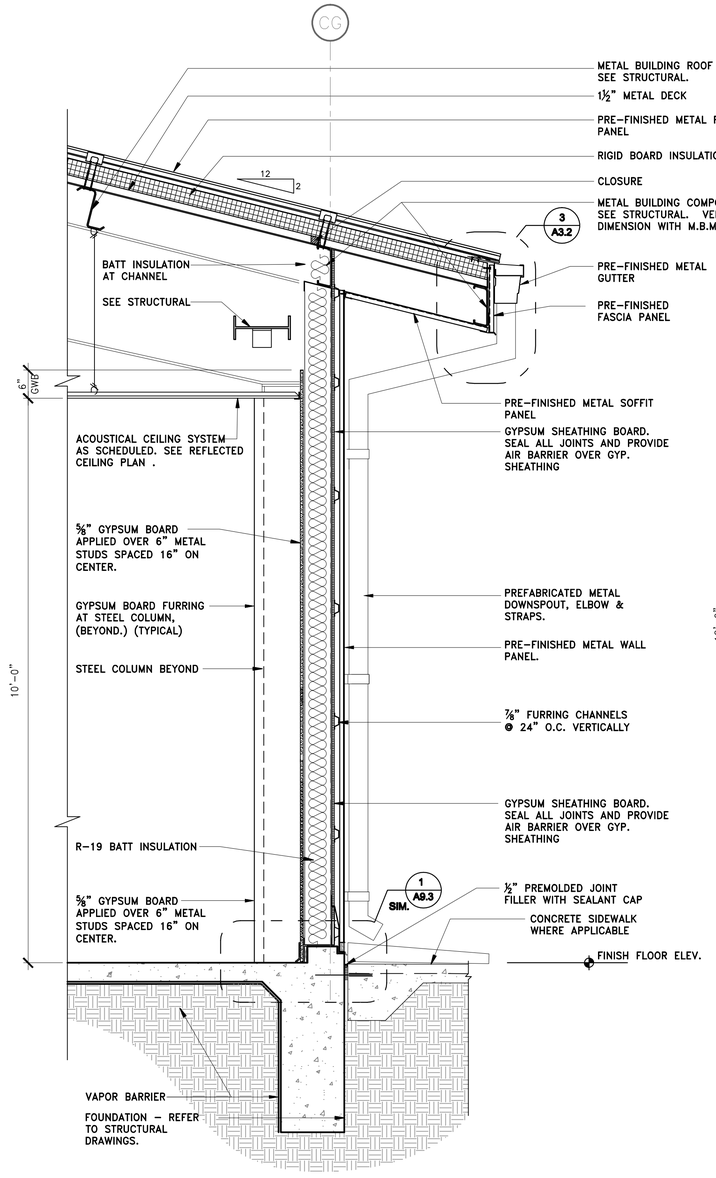

2 WALL SECTION -
SCALE: 3/4" = 1'-0"

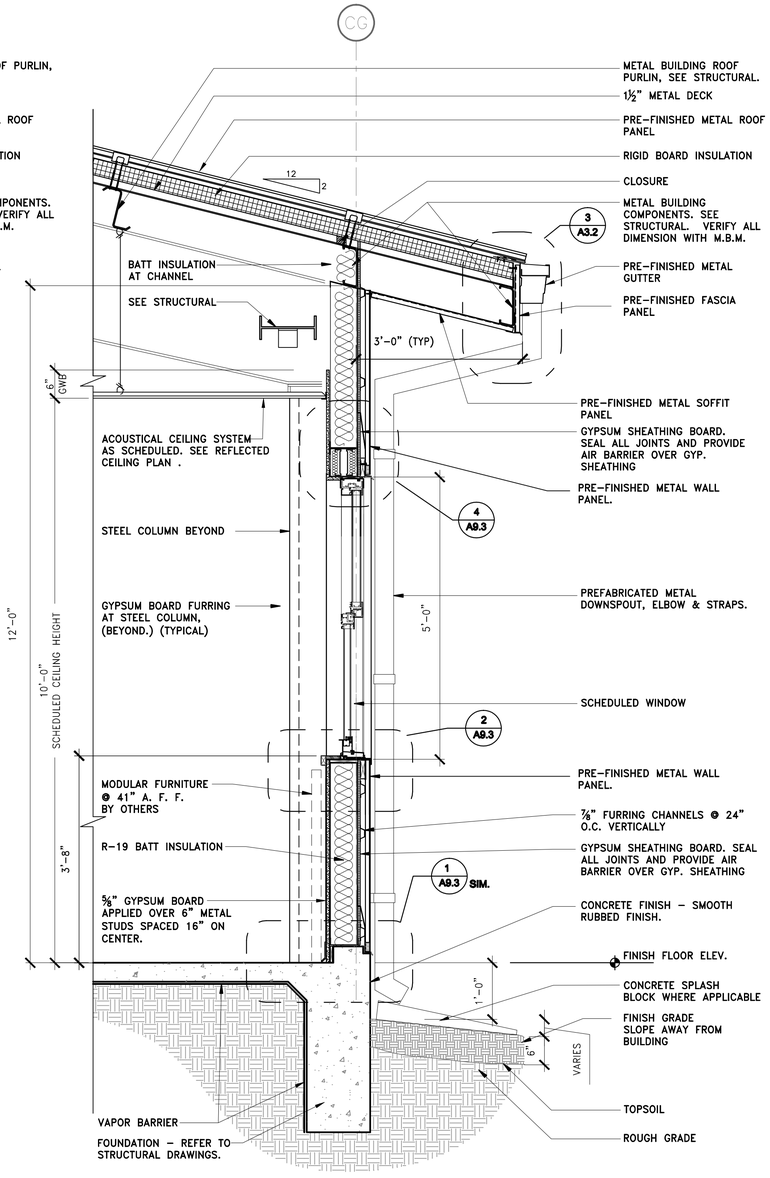

1 WALL SECTION -
SCALE: 3/4" = 1'-0"

WALL SECTIONS

NOTE: THIS DRAWING WAS CREATED FOR PRODUCTION ON 22" x 34" SHEET SIZE. DO NOT SCALE PRINTS.

Texas Department of Transportation
125 E. 11th Street
Austin, Texas 78701-2483
(512) 416-3048

Copyright © 2009 Texas Department of Transportation

THIS DOCUMENT IS RELEASED FOR THE PURPOSE OF
INFORMATION ONLY
NOT FOR REGULATORY
APPROVAL, PERMITTING,
OR CONSTRUCTION.

EDCOUCH MAINTENANCE FACILITY
HIDALGO COUNTY, EDCOUCH TEXAS
PHARR DISTRICT

Revisions

Drawn by: JT
Project No.
Date 05-26-2009
Sheet No.

A8.3
of 28 sheets

CADFILE: T:\ENTPAD02\TWC\BC\A704-00-057\02-77-4704005\07\cad\proj\plot plots\autocad\VCad\Arch\BS4_A8_3.dwg Plotted: Fri, Aug. 07, 2009 @ 12:05 PM By: MBAZAN

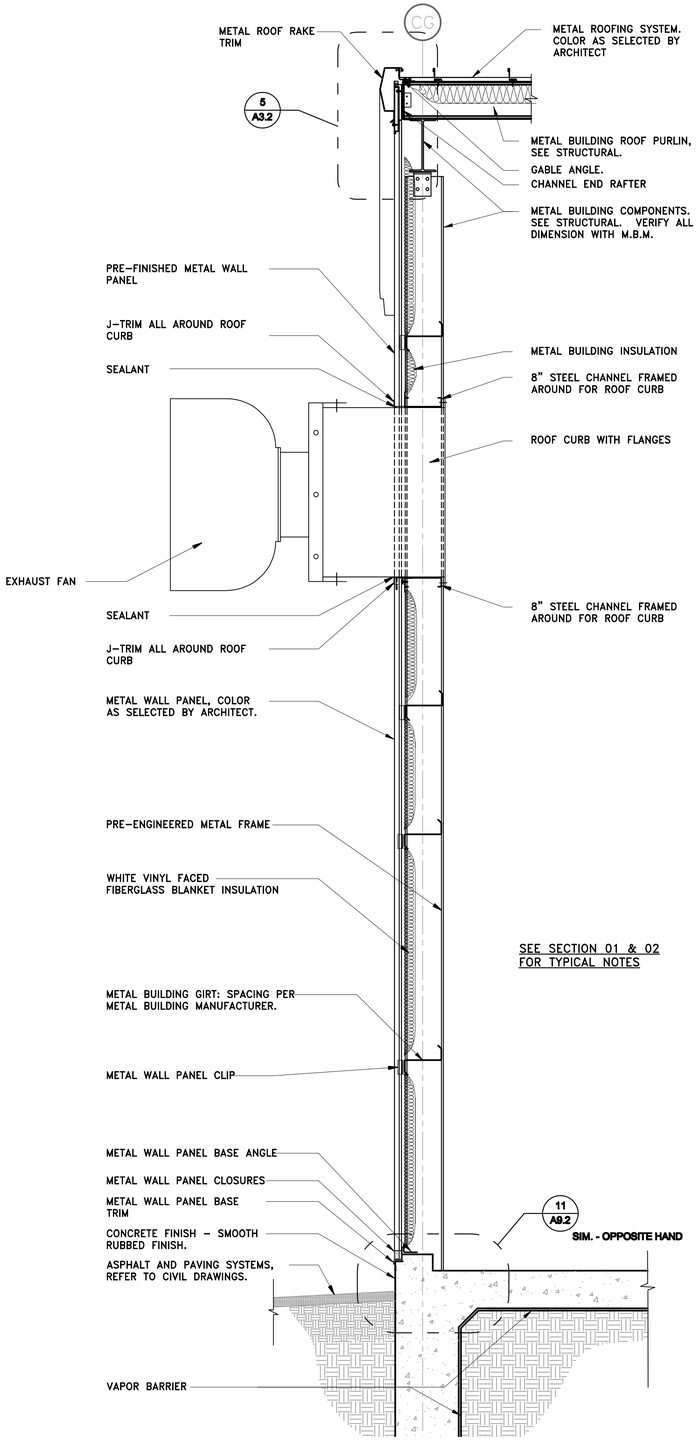

2 SECTION - THRU-WALL EXHAUST FAN
SCALE: 3/4" = 1'-0"

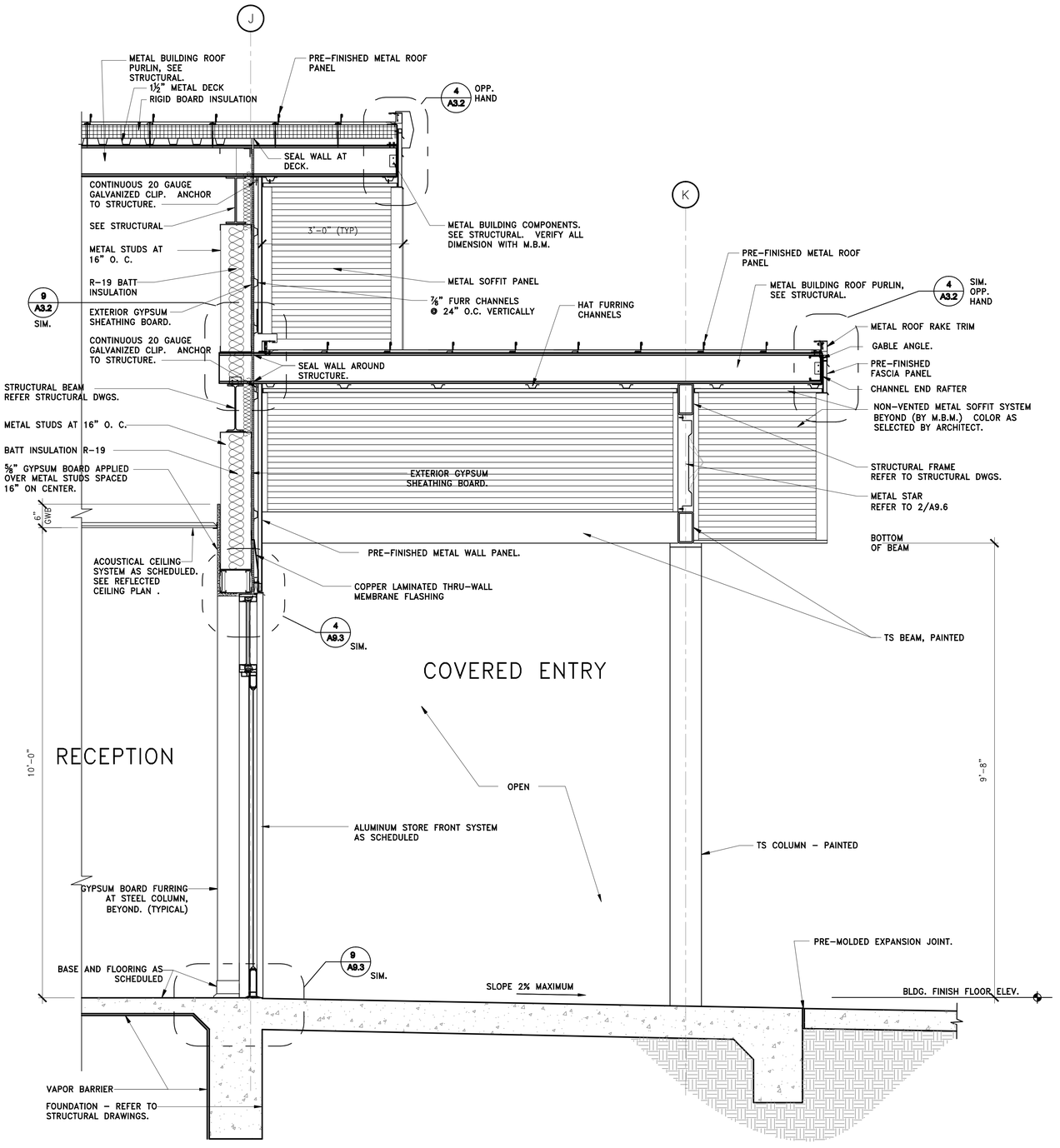

1 WALL SECTION -
SCALE: 3/4" = 1'-0"

WALL SECTIONS

NOTE: THIS DRAWING WAS CREATED FOR PRODUCTION ON 22" x 34" SHEET SIZE. DO NOT SCALE PRINTS.

CADFILE: T:\MNTFM\D025FTW\CSC-0704-00-057\03-77-4704000357\Acad\proto\typical pdfs\edcouch\Acad\Arch\864_A9_4.dwg Plotted: FH, Aug. 07, 2009 @ 12:26 PM By: MBAZAN

Texas Department of Transportation
125 E. 11th Street
Austin, Texas 78701-2483
(512) 416-3048
Copyright © 2005 Texas Department of Transportation

THIS DOCUMENT IS RELEASED FOR THE PURPOSE OF
INFORMATION ONLY
NOT FOR REGULATORY
APPROVAL, PERMITTING,
OR CONSTRUCTION.

EDCOUCH
MAINTENANCE FACILITY
HIDALGO COUNTY, EDCOUCH TEXAS
PHARR DISTRICT

Revisions

Drawn by:
JT
Project No.

Date
05-26-2009
Sheet No.

A8.4
of 28 sheets

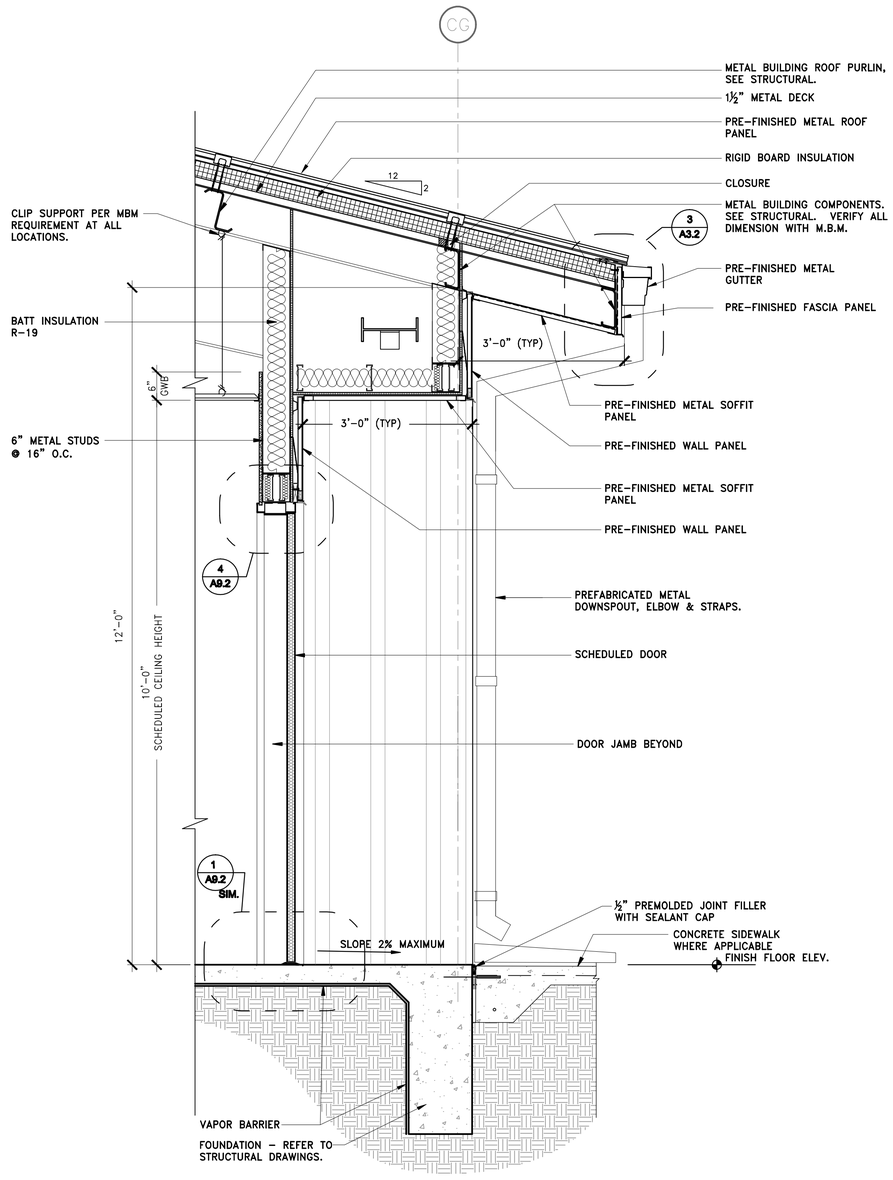

2 WALL SECTION -
SCALE: 3/4" = 1'-0"

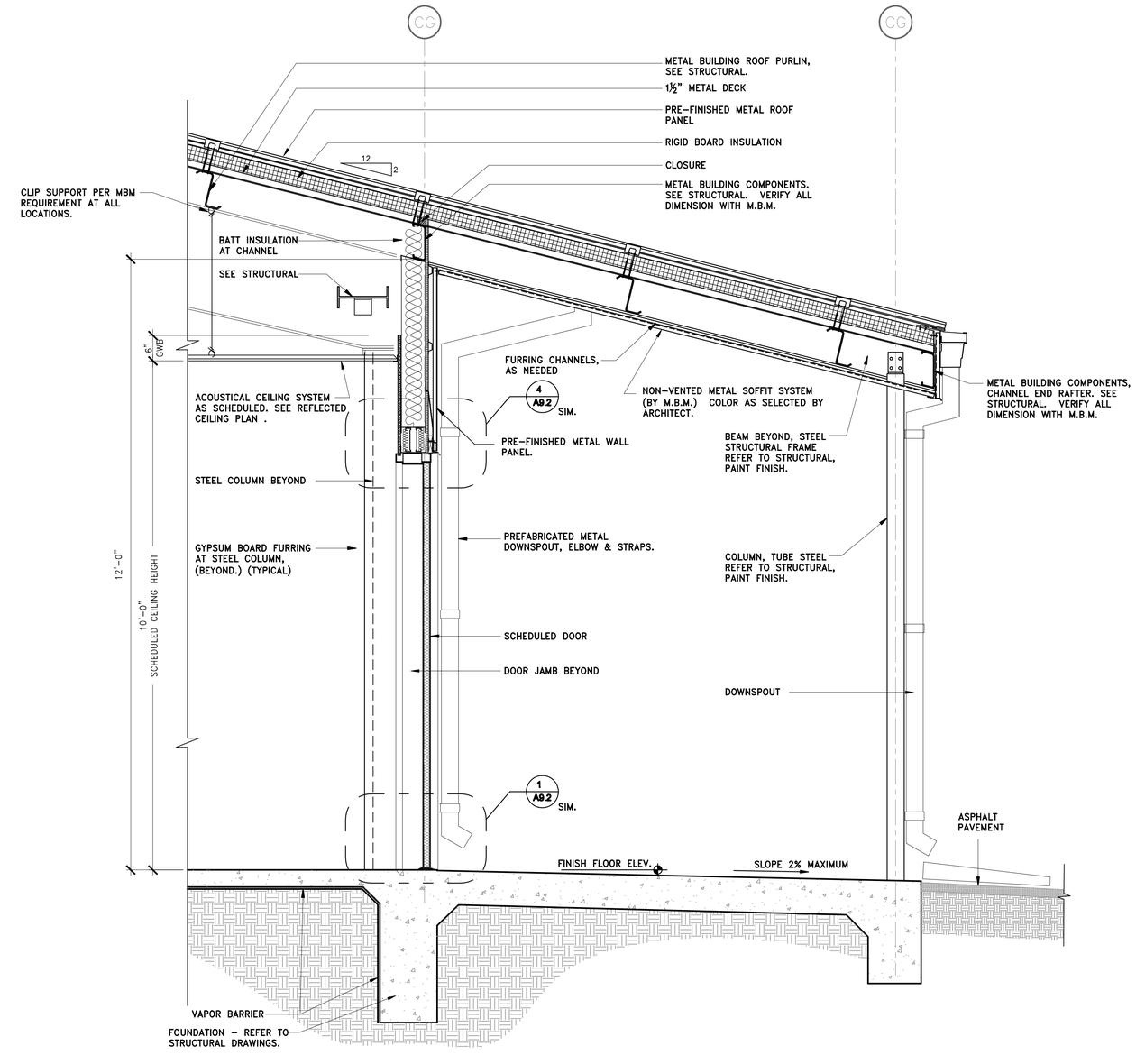

1 WALL SECTION -
SCALE: 3/4" = 1'-0"

WALL SECTIONS

NOTE: THIS DRAWING WAS CREATED FOR PRODUCTION ON 22" x 34" SHEET SIZE. DO NOT SCALE PRINTS.

Texas Department of Transportation
125 E. 11th Street
Austin, Texas 78701-2483
(512) 416-3048
Copyright © 2005 Texas Department of Transportation

THIS DOCUMENT IS RELEASED FOR THE PURPOSE OF
INFORMATION ONLY
NOT FOR REGULATORY
APPROVAL, PERMITTING,
OR CONSTRUCTION.

EDCOUCH
MAINTENANCE FACILITY
HIDALGO COUNTY, EDCOUCH TEXAS
PHARR DISTRICT

Revisions

Drawn by:
JT

Project No.

Date
05-28-2009
Sheet No.

A8.5
of 28 sheets

CADFILE: T:\MNTPMN\D09F1WC3\C4704-00-837\02-77-4704008371\sad\prototype\sad pdf\edcouch\Asad\Arch\804_A8_5.dwg Plotted: Fri, Aug. 07, 2009 @ 12:38 PM By: MBAZAN

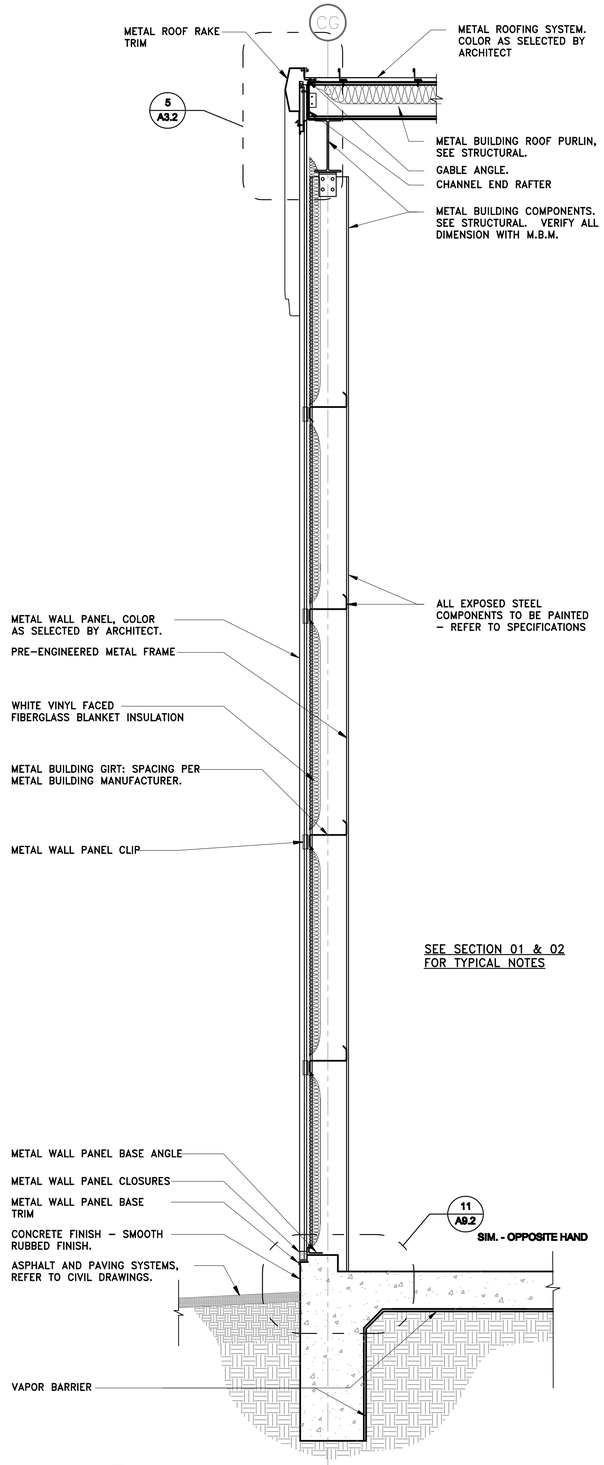

3 WALL SECTION -
SCALE: 3/4" = 1'-0"

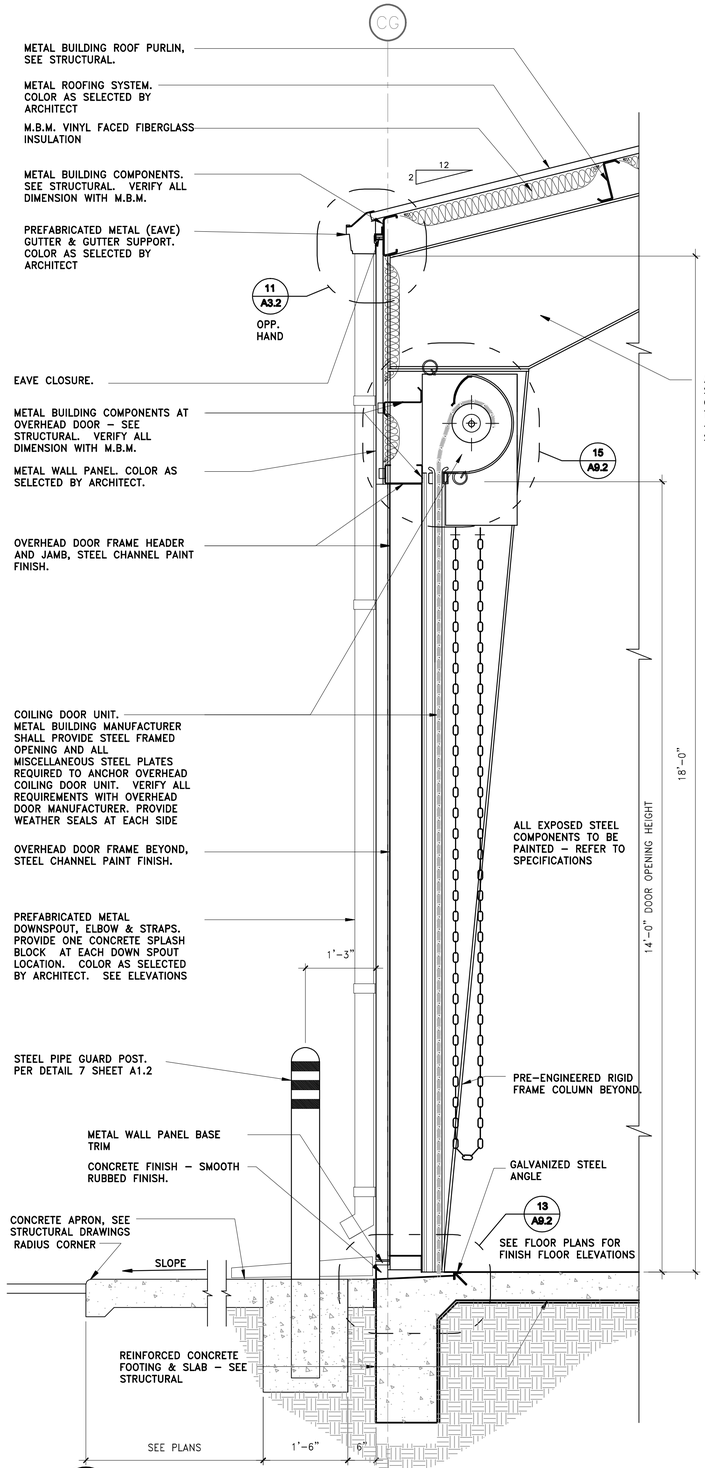

2 WALL SECTION -
SCALE: 3/4" = 1'-0"

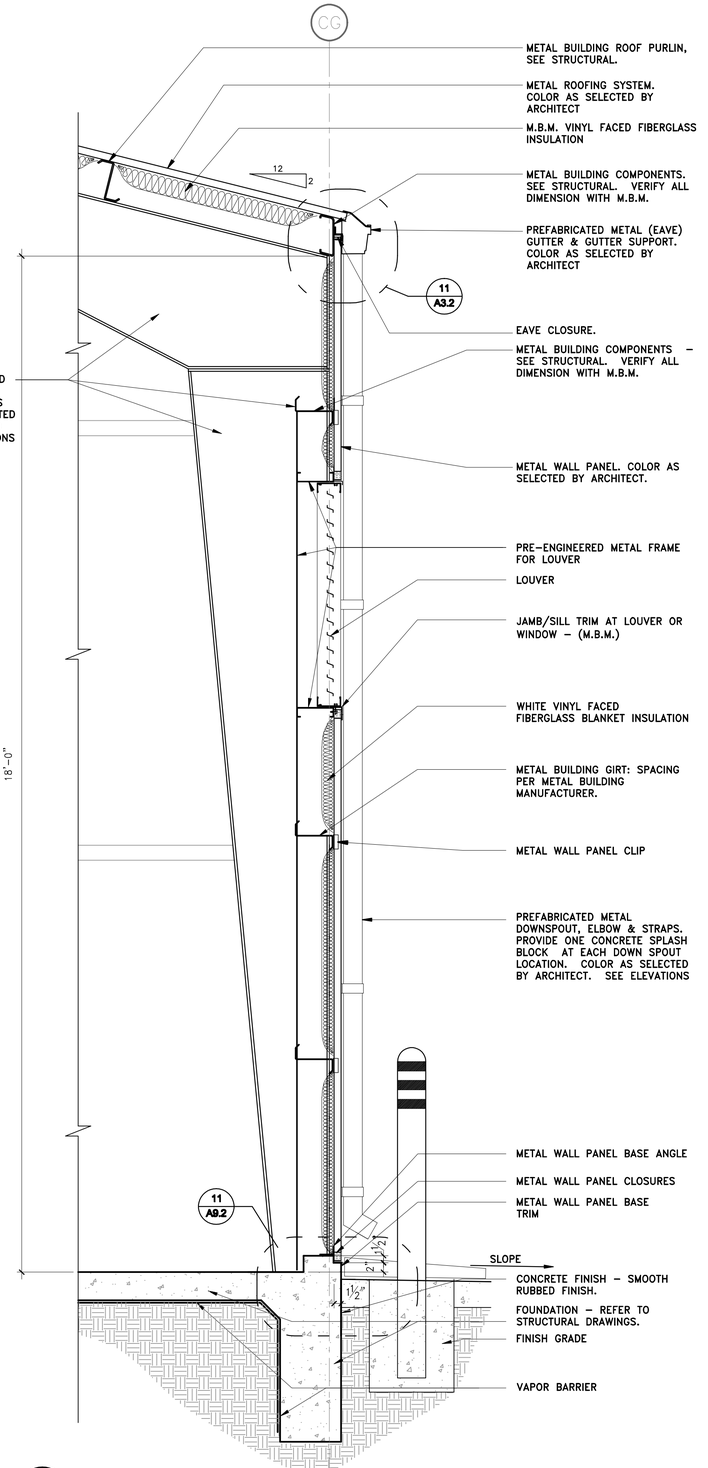

1 WALL SECTION -
SCALE: 3/4" = 1'-0"

WALL SECTIONS

NOTE: THIS DRAWING WAS CREATED FOR PRODUCTION ON 22" x 34" SHEET SIZE. DO NOT SCALE PRINTS.

Texas Department of Transportation
125 E. 11th Street
Austin, Texas 78701-2483
(512) 416-3048

Copyright © 2005 Texas Department of Transportation

THIS DOCUMENT IS RELEASED FOR THE PURPOSE OF
INFORMATION ONLY
NOT FOR REGULATORY
APPROVAL, PERMITTING,
OR CONSTRUCTION.

EDCOUCH MAINTENANCE FACILITY
HIDALGO COUNTY, EDCOUCH TEXAS
PHARR DISTRICT

Revisions

Drawn by: JT
Project No.
Date 05-26-2009
Sheet No.

A8.6
of 28 sheets

CADFILE: T:\MNTPMD\02PTW\CSC\4704-00-057\02-77-4704005702\cad\prodobj\plot pdfs\edcouch\Xcad\Arch\BS4_A8_6.dwg Plotted: Fri, Aug. 07, 2009 @ 13:06 PM By: MBAZAN

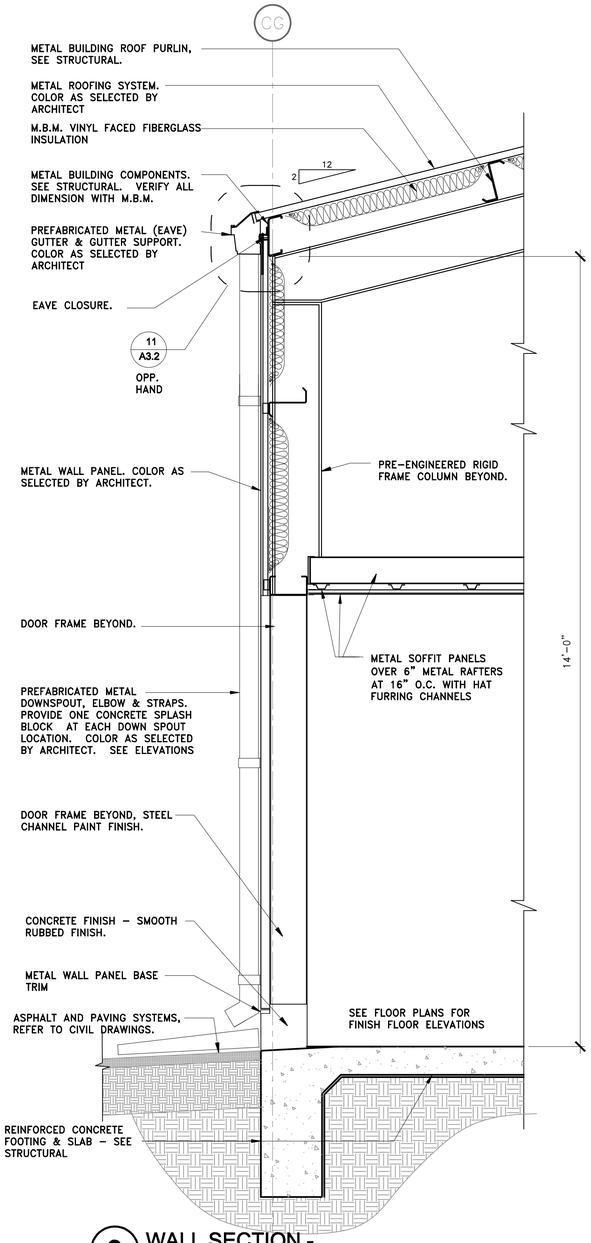

3 WALL SECTION -
SCALE: 3/4" = 1'-0"

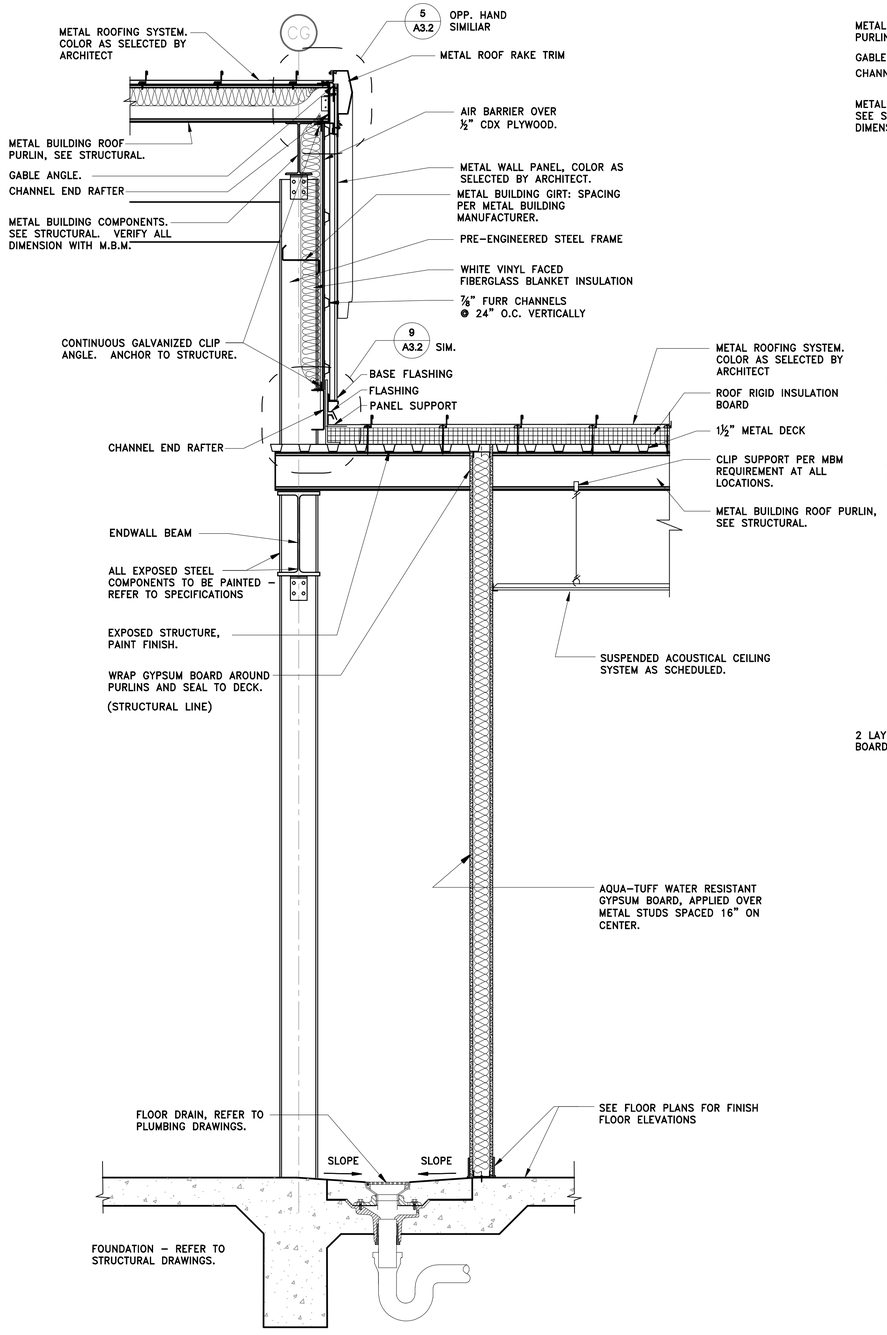

2 WALL SECTION -
SCALE: 3/4" = 1'-0"

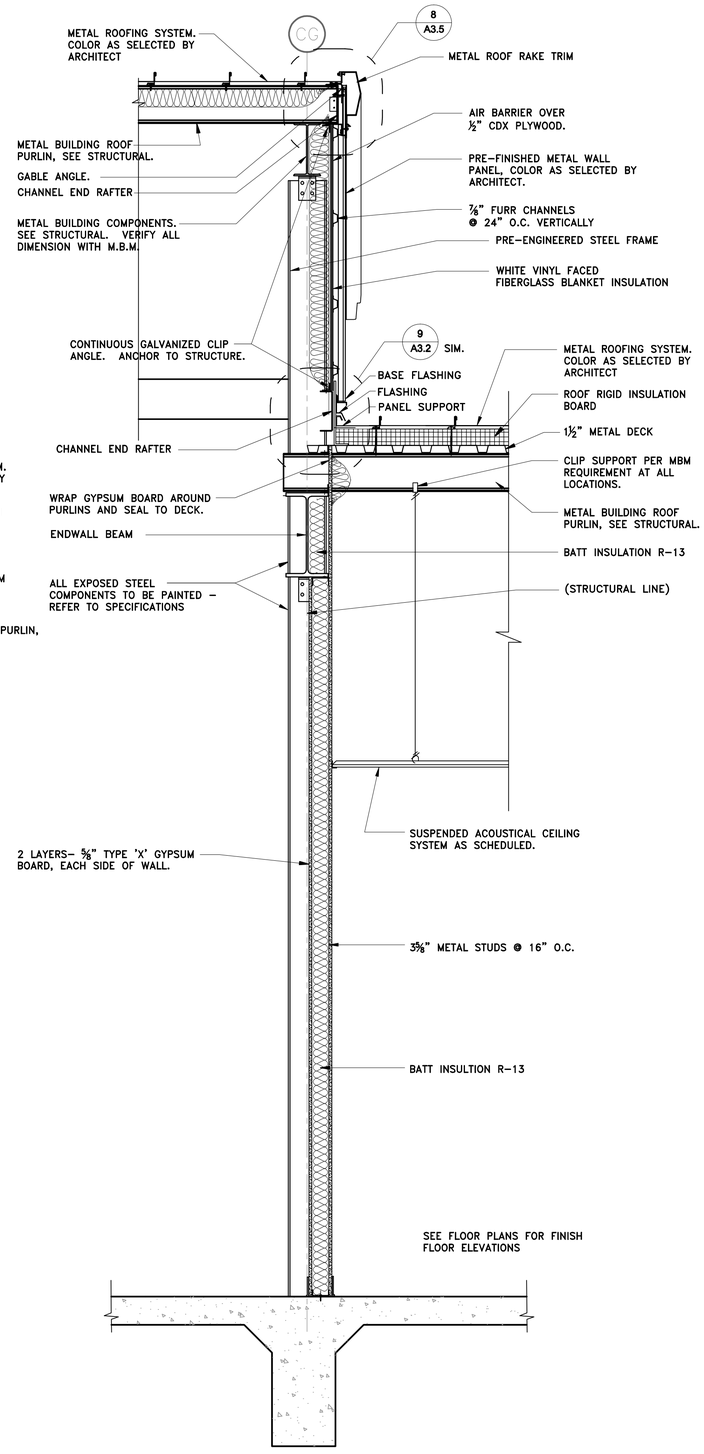

1 WALL SECTION -
SCALE: 3/4" = 1'-0"

WALL SECTIONS

NOTE: THIS DRAWING WAS CREATED FOR PRODUCTION ON 22" x 34" SHEET SIZE. DO NOT SCALE PRINTS.

Texas Department of Transportation
125 E. 11th Street
Austin, Texas 78701-2483
(512) 416-3048

Copyright © 2005 Texas Department of Transportation

THIS DOCUMENT IS RELEASED FOR THE PURPOSE OF
INFORMATION ONLY
NOT FOR REGULATORY
APPROVAL, PERMITTING,
OR CONSTRUCTION.

EDCOUCH
MAINTENANCE FACILITY
HIDALGO COUNTY, EDCOUCH TEXAS
PHARR DISTRICT

Revisions

Drawn by:
JT
Project No.

Date
05-26-2009
Sheet No.

A8.7
of 28 sheets

CADFILE: T:\MAINT\ADD2FTW\CSD\4704-00-037\02-77-4704037\Acad\proto\typical pdf\edcouch\Acad\Arch\WS4_A8_7.dwg Plotted: Fri, Aug. 07, 2009 @ 12:07 PM By: MBAZAN

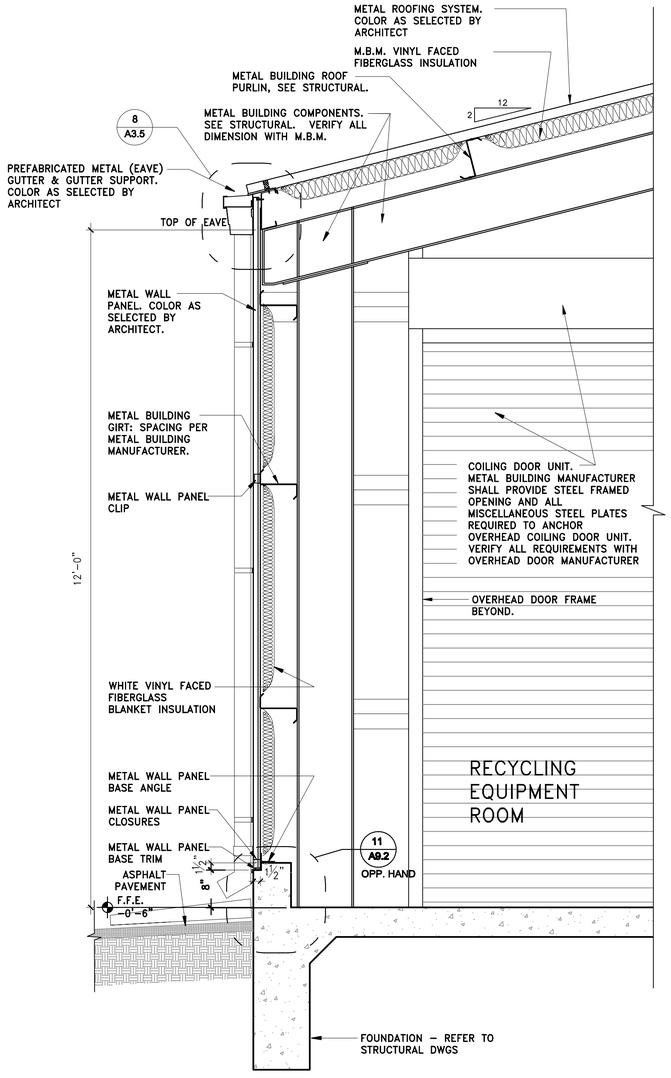

3 WALL SECTION -
SCALE: 3/4" = 1'-0"

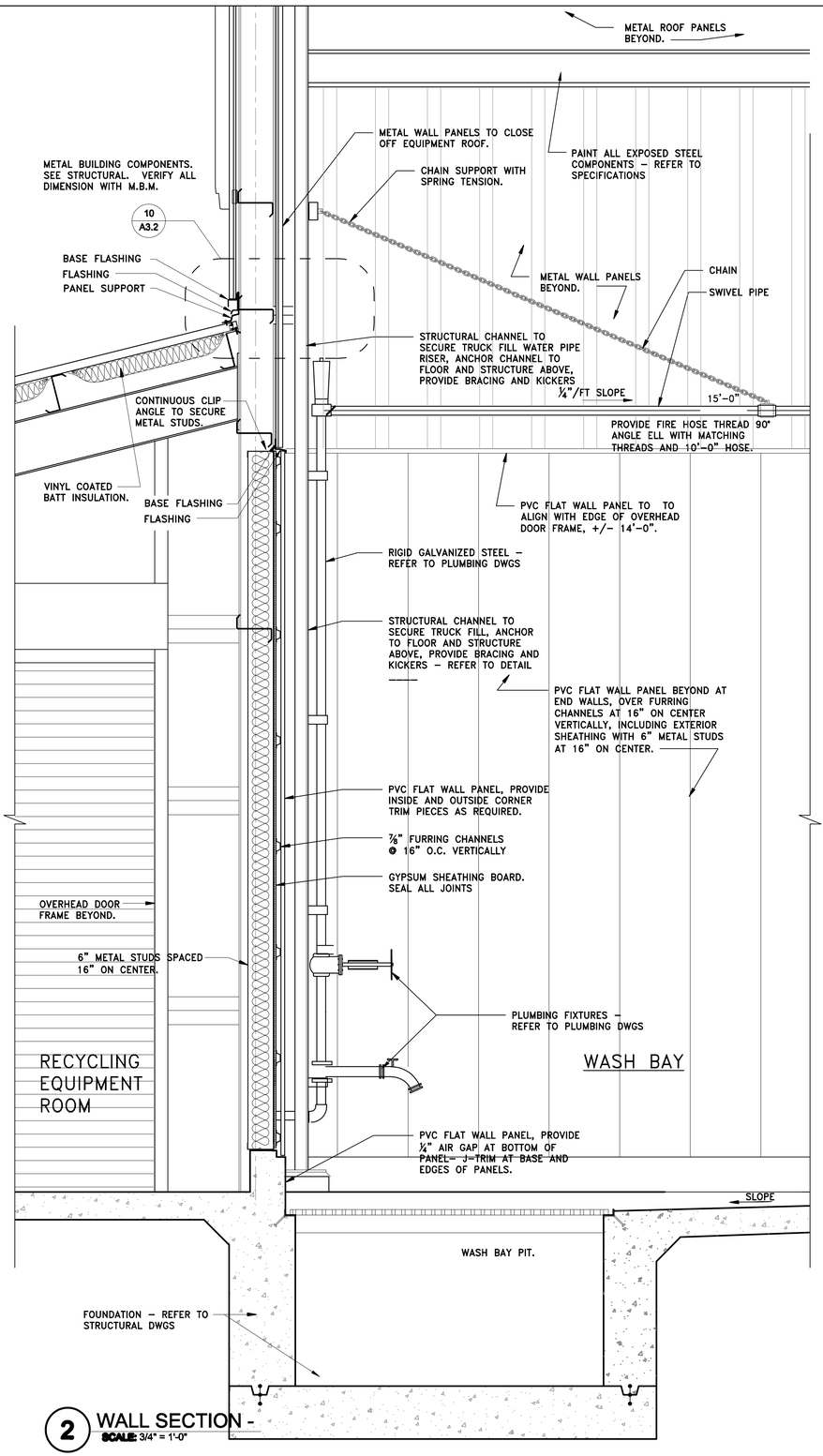

2 WALL SECTION -
SCALE: 3/4" = 1'-0"

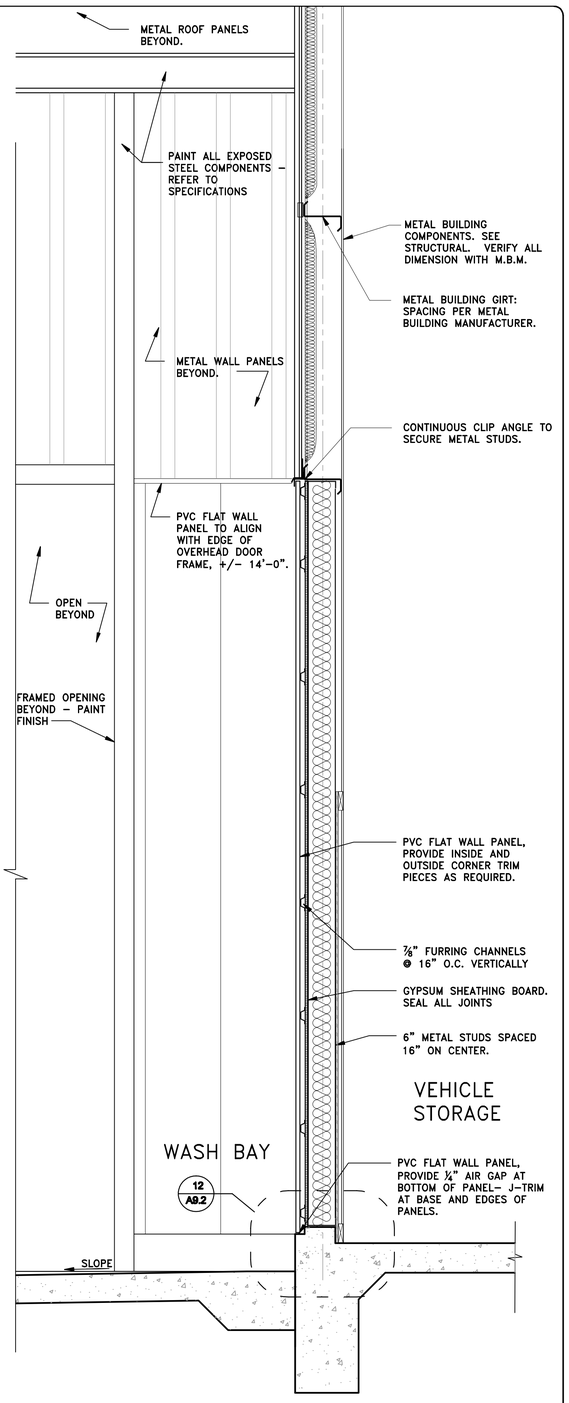

1 WALL SECTION -
SCALE: 3/4" = 1'-0"

WALL SECTIONS

NOTE: THIS DRAWING WAS CREATED FOR PRODUCTION ON 22" x 34" SHEET SIZE. DO NOT SCALE PRINTS.

Texas Department of Transportation
125 E. 11th Street
Austin, Texas 78701-2483
(512) 416-3048

Copyright © 2005 Texas Department of Transportation

THIS DOCUMENT IS RELEASED FOR THE PURPOSE OF
INFORMATION ONLY
NOT FOR REGULATORY
APPROVAL, PERMITTING,
OR CONSTRUCTION.

EDCOUCH
MAINTENANCE FACILITY
HIDALGO COUNTY, EDCOUCH TEXAS
PHARR DISTRICT

Revisions

Drawn by:
JT

Project No.

Date
05-26-2009
Sheet No.

A8.8
of 28 sheets

CADFILE: T:\MNTFM\D02FTW\CBC4704-00-837\03-77-4704003837\Acad\proto\plot pltfile\edcouch\Acad\Arch\804_A8_8.dwg Plotted: Fri, Aug. 07, 2009 @ 12:07 PM By: MBAZAN

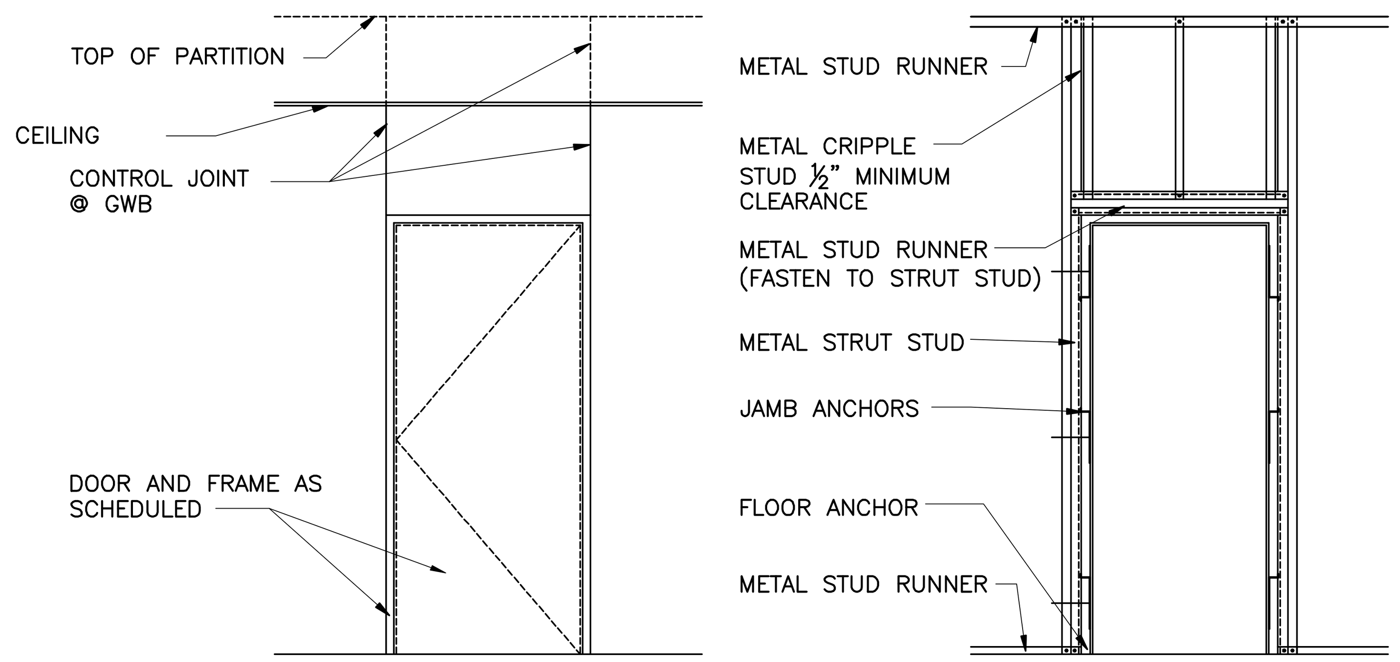

7 DOOR FRAMING
SCALE: N. T. S.

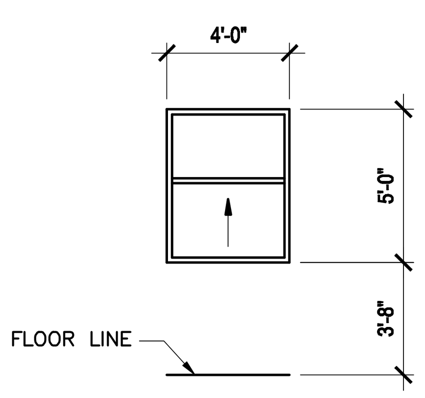

WINDOW TYPE (A)

SINGLE HUNG ALUMINUM (2" X 4½") WITH CLEAR ANODIZED FINISH.

GLAZE WITH 1" THICK, BLUE TINTED (OUTER PANE ONLY), TEMPERED, INSULATING GLASS W/ S.S. INSECT SCREEN

5 WINDOW TYPES
SCALE: N. T. S.

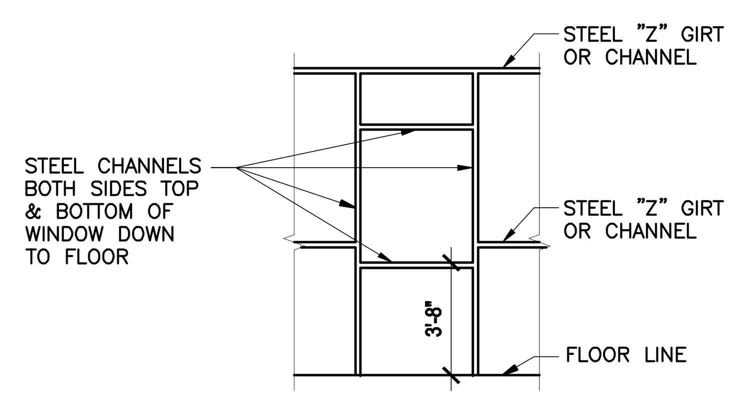

6 WINDOW LOUVER FRAME
SCALE: N. T. S.

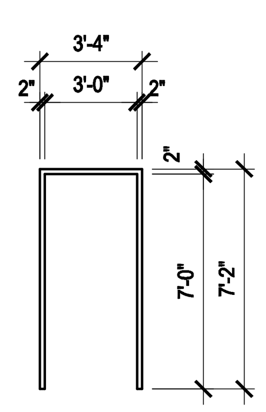

FRAME TYPE F1

HOLLOW METAL FRAME.

PAINT FINISH.

2 FRAME TYPES
SCALE: N. T. S.

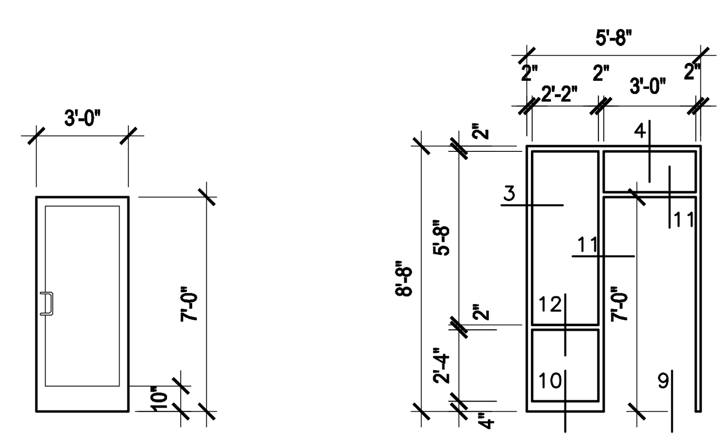

DOOR TYPE – AL1

1¾" THICK, ALUMINUM FRAME, NARROW STYLE DOOR WITH 10" HIGH BOTTOM RAIL – CLEAR ANODIZED FINISH.

GLAZE WITH ½" THICK, BLUE, TEMPERED PLATE GLASS.

FRAME TYPE – AL1

GLAZE WITH 1" THICK, BLUE TINTED (OUTER PANE ONLY), TEMPERED, INSULATING GLASS.

DETAILS ON A9.3

3 STORE FRONT SYSTEM
SCALE: N. T. S. REFER TO A9.4 FOR DETAILS

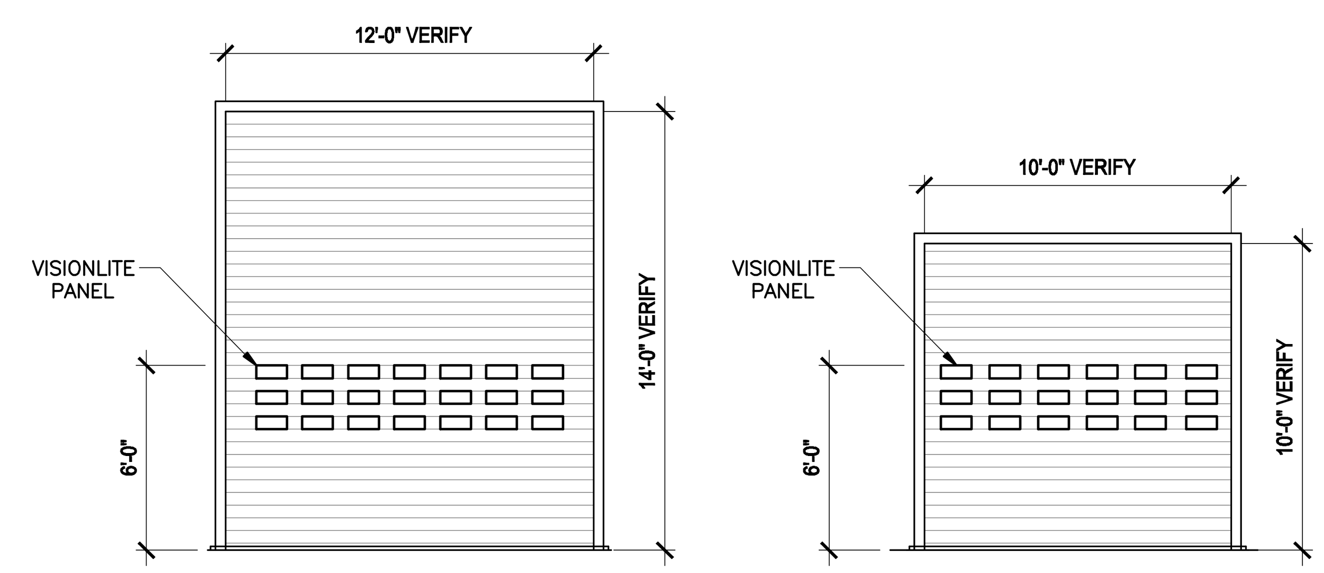

DOOR TYPE – OH1

STEEL, COILING DOOR (INSULATED).

DOOR TYPE – OH2

STEEL, COILING DOOR (INSULATED).

4 COILING DOOR TYPES
SCALE: N. T. S.

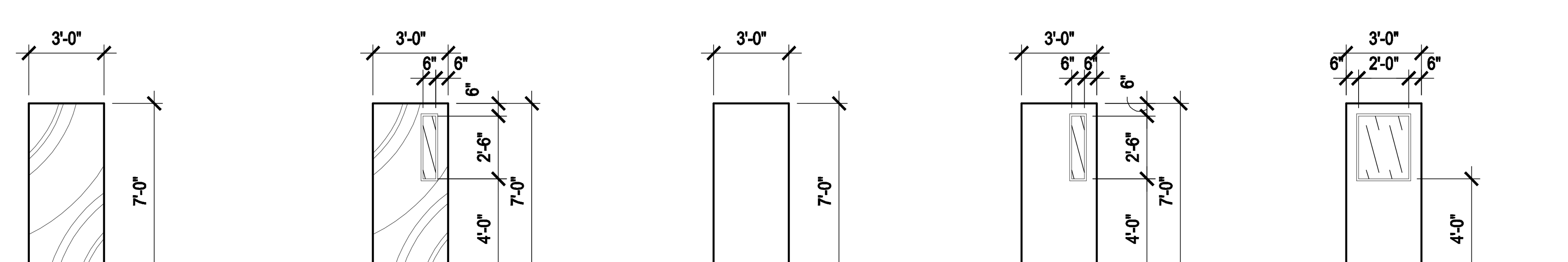

DOOR TYPE – D1

1¾" THICK, FLUSH, SOLID CORE, PLAIN SLICED, RED OAK, VENEER DOOR.

FIELD STAIN AND VARNISH FINISH.
NO PRE–FINISH TRIM.

DOOR TYPE – D2

1¾" THICK, FLUSH, SOLID CORE, PLAIN SLICED, RED OAK, VENEER DOOR.

FIELD STAIN AND VARNISH FINISH.
NO PRE–FINISH TRIM.

FURNISH DOOR WITH ¼" THICK, CLEAR, GLASS VIEW LITE (6"WX30"H) IN METAL FRAME

DOOR TYPE – D3

1¾" THICK, FLUSH, EXTRA HEAVY–DUTY, HOLLOW METAL DOOR.

PAINT FINISH.

DOOR TYPE – D4

1¾" THICK, FLUSH, EXTRA HEAVY–DUTY, HOLLOW METAL DOOR.

PAINT FINISH.

FURNISH DOOR WITH ¼" THICK, CLEAR, GLASS VIEW LITE IN METAL FRAME

DOOR TYPE – D5

1¾" THICK, FLUSH, EXTRA HEAVY–DUTY, HOLLOW METAL DOOR.

PAINT FINISH.

FURNISH DOOR WITH ¼" THICK, CLEAR, GLASS VIEW LITE (6"WX24"H) IN METAL FRAME

1 DOOR TYPES
SCALE: N. T. S.

KEY TO ROOM FINISH SCHEDULE

FLOOR	BASE	WALLS	CEILING
F1 SEALED CONCRETE F2 12" X 12" VINYL COMPOSITION TILE F3 UNGLAZED 2" x 2" CERAMIC TILE	B1 4" RUBBER BASE B2 NO BASE B3 4"X 4" CERAMIC TILE - COVED B4 1"X 4" SYP WOOD BASE B5 PVC BASE	W1 GYPSUM BOARD - PAINTED W2 USG FIBEROCK 5/8" AQUA TOUGH WALL PANELS W3 4" x 4" - FULL HEIGHT GLAZED CERAMIC TILE W4 PAINTED PLYWOOD TO 8' AFF W5 EXPOSED STRUCTURE W6 PVC FLAT WALL PANELS & TRIM W7 PRE-FINISH METAL WALL PANEL.	C1 2' x 2' ACOUSTICAL TILE C2 GYPSUM BOARD - PAINTED C3 EXPOSED STRUCTURE C4 SOFFIT METAL PANELS

SCHEDULE OF ROOM FINISHES

ROOM NO.	ROOM NAME	FLOOR	BASE	WALLS NORTH	WALLS EAST	WALLS SOUTH	WALLS WEST	CEILING MTL.	CEILING HT.	REMARKS
101	LOBBY	F 2	B 1	W 1	W 1	W 1	W 1	C 1	10'-0"	NOTE 10
102	SUPPLY / COPY	F 2	B 1	W 1	W 1	W 1	W 1	C 1	9'-0"	
103	ASSISTANT SUPERVISOR	F 2	B 1	W 1	W 1	W 1	W 1	C 1	9'-0"	
104	MAINTENANCE SUPERVISOR	F 2	B 1	W 1	W 1	W 1	W 1	C 1	9'-0"	
105	CORRIDOR	F 2	B 1	W 1	W 1	W 1	W 1	C 1	10'-0"	NOTE 10
106	CONTRACTS / ADMIN SUPPORT	F 2	B 1	W 1	W 1	W 1	W 1	C 1	10'-0"	
107	WOMEN	F 3	B 3	W 2	W2	W2	W3	C 1	9'-0"	NOTE 3 & 10
108	WOMEN DRESSING	F3	B3	W2	W2	W2	W2	C 1	9'-0"	NOTE 6 & 7
109	MEN	F3	B3	W2	W3	W2	W2	C 1	9'-0"	NOTE 3 & 10
110	MEN DRESSING	F3	B3	W 2	W2	W2	W2	C1	9'-0"	NOTE 6 & 7 & 10
111	CORRIDOR	F2	B 1	W 1	W 1	W 1	W 1	C1	10'-0"	NOTE 10
112	MEETING ROOM	F2	B 1	W 1	W 1	W 1	W 1	C1	10'-0"	NOTE 5 & 10
113	STORAGE	F2	B1	W1	W1	W1	W1	C1	9'-0"	
114	WIRE CLOSET	F1	B1	W1	W1	W1	W1	C3	-	
115	JANITOR	F2	B 1	W2	W2	W2	W2	C1	8'-0"	NOTE 8
116	EQUIPMENT SHOP	F1	B4	W2	W4-W5	W4-W5	W5	C3	-	NOTE 11
117	MATERIAL/SHOP STORAGE	F1	B4	W1-W4	W5	W1-W4	W1-W4	C3	-	NOTE 11
118	MECH./ELEC. ROOM	F1	B4	W1	W1	W1	W1	C2	-	
119	EQUIPMENT STORAGE	F1	B4	W4-W5	W5	W4-W5	W5	C3	-	NOTE 11
120	WASH BAY	F1	B5	W6	W6	W6	W6	C3	-	NOTE 9
121	RECYCLING EQUIPMENT	F1	B4	W5	W5	W5	W5	C3	-	NOTE 11
122	FUEL LOG ROOM	F1	B4	W7	W7	W 7	W 7	C4	9'-0"	
123	HERBICIDE ROOM	F1	B4	W4	W4	W4	W4	C2	8'-0"	NOTE 10

REMARK NOTES: FOR ROOM FINISH AND DOOR SCHEDULES.

1. UNDERCUT DOOR 1".
2. INSTALL 4" WIDE DUAL GUARD THRESHOLD TAPE BY PROTECTO WRAP COMPANY (1-800-759-9727) UNDER ALL EXTERIOR DOOR THRESHOLDS.
3. 2" WIDE MARBLE THRESHOLD. 1/2" MAX. HEIGHT.
4. INSTALL 1/2"x 4'x 8' CDX PLYWOOD ON WALL 4' A.F.F. ON WALL. PROVIDE NECESSARY BLOCKING IN STUD WALLS TO SUPPORT PLYWOOD.
5. PROVIDE BLOCKING IN STUD WALL @ 3' & 7' A.F.F. ON EAST WALL OF MEETING ROOM 112.
6. FULL HEIGHT FLOOR AND WALL CERAMIC TILE @ SHOWERS.
7. GWB CEILING IN SHOWERS.
8. 4'X8' FRP ON ALL WALLS.
9. PAINT STEEL STRUCTURE INCLUDING PURLINS.
10. PAINT - HIGH TRAFFIC AREA PER SPECIFICATIONS.
11. PAINT - STRUCTURE, PRIMARY AND SECONDARY PER SPECIFICATIONS.

DOOR SCHEDULE

DOOR NUMBER	DOOR SIZE	DOOR TYPE	DOOR MAT'L	FRAME TYPE	FRAME MAT'L	DETAILS HEAD	DETAILS JAMB	DETAILS SILL	FIRE RATE	HDWD SET	REMARKS
101	3-0" X 7'-0" X 1 3/4"	AL1	ALUM.	AL1	ALUM.	11/A9.3	11/A9.3	9/A9.3		10	NOTE 2
102	3'-0" X 7'-0" X 1 3/4"	D1	WOOD	F1	H.M.	6/A9.2	5/A9.2		20 MIN	7	
103	3'-0" X 7'-0" X 1 3/4"	D1	WOOD	F1	H.M.	6/A9.2	5/A9.2			7	
104	3'-0" X 7'-0" X 1 3/4"	D1	WOOD	F1	H.M.	6/A9.2	5/A9.2			7	
105	3'-0" X 7'-0" X 1 3/4"	D4	H. M.	F1	H. M.	4/A9.2	3/A9.2	1/A9.2		1	NOTE 2
106	NOT USED			F1	H.M.	6/A9.2	5/A9.2				
107	3'-0" X 7'-0" X 1 3/4"	D1	WOOD	F1	H. M.	6/A9.2	5/A9.2			8	NOTE 1 & 3
109A	3'-0" X 7'-0" X 1 3/4"	D1	WOOD	F1	H.M.	6/A9.2	5/A9.2			8	NOTE 1 & 3
109B	3'-0" X 7'-0" X 1 3/4"	D1	WOOD	F1	H.M.	12/A9.2	11/A9.2			10	
110	3'-0" X 7'-0" X 1 3/4"	D1	WOOD	F1	H.M.	6/A9.2	5/A9.2			8	NOTE 1 & 3
111	3'-0" X 7'-0" X 1 3/4"	D5	H.M.	F1	H.M.	10/A9.2	9/A9.2		20 MIN	5	
112A	3'-0" X 7'-0" X 1 3/4"	D2	WOOD	F1	H.M.	12/A9.2	11/A9.2			6	
112B	3'-0" X 7'-0" X 1 3/4"	D4	H. M.	F1	H. M.	4/A9.2	3/A9.2	1/A9.2		1	NOTE 2
113	3'-0" X 7'-0" X 1 3/4"	D1	WOOD	F1	H.M.	6/A9.2	5/A9.2			4	
114	3'-0" X 7'-0" X 1 3/4"	D3	H.M.	F1	H.M.	10/A9.2	9/A9.2		20	4	
115	3'-0" X 7'-0" X 1 3/4"	D1	WOOD	F1	H.M.	6/A9.2	5/A9.2			4	NOTE 1
116A	3'-0" X 7'-0" X 1 3/4"	D4	H. M.	F1	H. M.	8/A9.2	7/A9.2	2/A9.2		3	NOTE 2
116B	12'-0" x 14'-0" x 2"	OH1	STEEL		STEEL	15/A9.2	14/A9.2	13/A9.2		11	
116C	12'-0" x 14'-0" x 2"	OH1	STEEL		STEEL	15/A9.2	14/A9.2	13/A9.2		11	
116D	3'-0" X 7'-0" X 1 3/4"	D4	H. M.	F1	H. M.	10/A9.2	9/A9.2		20 MIN	2	
117A	3'-0" X 7'-0" X 1 3/4"	D4	H. M.	F1	H. M.	8/A9.2	7/A9.2	2/A9.2		3	NOTE 2
117B	12'-0" x 14'-0" x 2"	OH1	STEEL		STEEL	15/A9.2	14/A9.2	13/A9.2		11	
117C	10'-0" X 10'-0" X 1 3/4"	OH2	STEEL		STEEL	15/A9.2	14/A9.2	13/A9.2		1	
117D	3'-0" X 7'-0" X 1 3/4"	D4	H. M.	F1	H. M.	8/A9.2	7/A9.2	2/A9.2		3	NOTE 2
117E	3'-0" X 7'-0" X 1 3/4"	D4	H. M.	F1	H. M.	10/A9.2	9/A9.2		20 MIN	2	
118	3'-0" X 7'-0" X 1 3/4"	D3	H. M.	F1	H. M.	10/A9.2	9/A9.2		20 MIN.	9	NOTE 1
119A	3'-0" X 7'-0" X 1 3/4"	D4	H. M.	F1	H. M.	8/A9.2	7/A9.2	2/A9.2		3	NOTE 2
119B	12'-0" x 14'-0" x 2"	OH1	STEEL		STEEL	15/A9.2	14/A9.2	13/A9.2		11	
119C	12'-0" x 14'-0" x 2"	OH1	STEEL		STEEL	15/A9.2	14/A9.2	13/A9.2		11	
119D	3'-0" X 7'-0" X 1 3/4"	D4	H. M.	F1	H. M.	8/A9.2	7/A9.2	2/A9.2		3	NOTE 2
119E	12'-0" x 14'-0" x 2"	OH1	STEEL		STEEL	15/A9.2	14/A9.2	13/A9.2		11	
119F	12'-0" x 14'-0" x 2"	OH1	STEEL		STEEL	15/A9.2	14/A9.2	13/A9.2		11	
121A	3'-0" X 7'-0" X 1 3/4"	D3	H. M.	F1	H. M.	8/A9.2	7/A9.2	1/A9.2		9	NOTE 2
121B	10'-0" x 10'-0" x 2"	OH2	STEEL		STEEL	15/A9.2	14/A9.2	13/A9.2		11	
123	3'-0" X 7'-0" X 1 3/4"	D3	H.M.	F1	H.M.	8/A9.2	7/A9.2	1/A9.2		9	NOTE 2

FINISH & DOOR SCHEDULE - DOOR & WINDOW TYPES

NOTE: THIS DRAWING WAS CREATED FOR PRODUCTION ON 22" x 34" SHEET SIZE. DO NOT SCALE PRINTS.

Texas Department of Transportation
125 E. 11th Street
Austin, Texas 78701-2483
(512) 416-3048
Copyright © 2005 Texas Department of Transportation

THIS DOCUMENT IS RELEASED FOR THE PURPOSE OF INFORMATION ONLY
NOT FOR REGULATORY APPROVAL, PERMITTING, OR CONSTRUCTION.

EDCOUCH MAINTENANCE FACILITY
HIDALGO COUNTY, EDCOUCH TEXAS PHARR DISTRICT

Revisions

Drawn by: RB/EE

Project No.

Date 05-26-2009

Sheet No.

A9.1

of 28 sheets

CADFILE: T:\MNTFMD02FTWCSC4704-00-857\02-77-470400857\Acad\prototypical pdfs\edcouch\Acad\Arch\654_A9_1.dwg Plotted: Fri. Aug. 07, 2009 @ 11:16 AM By: MBAZAN

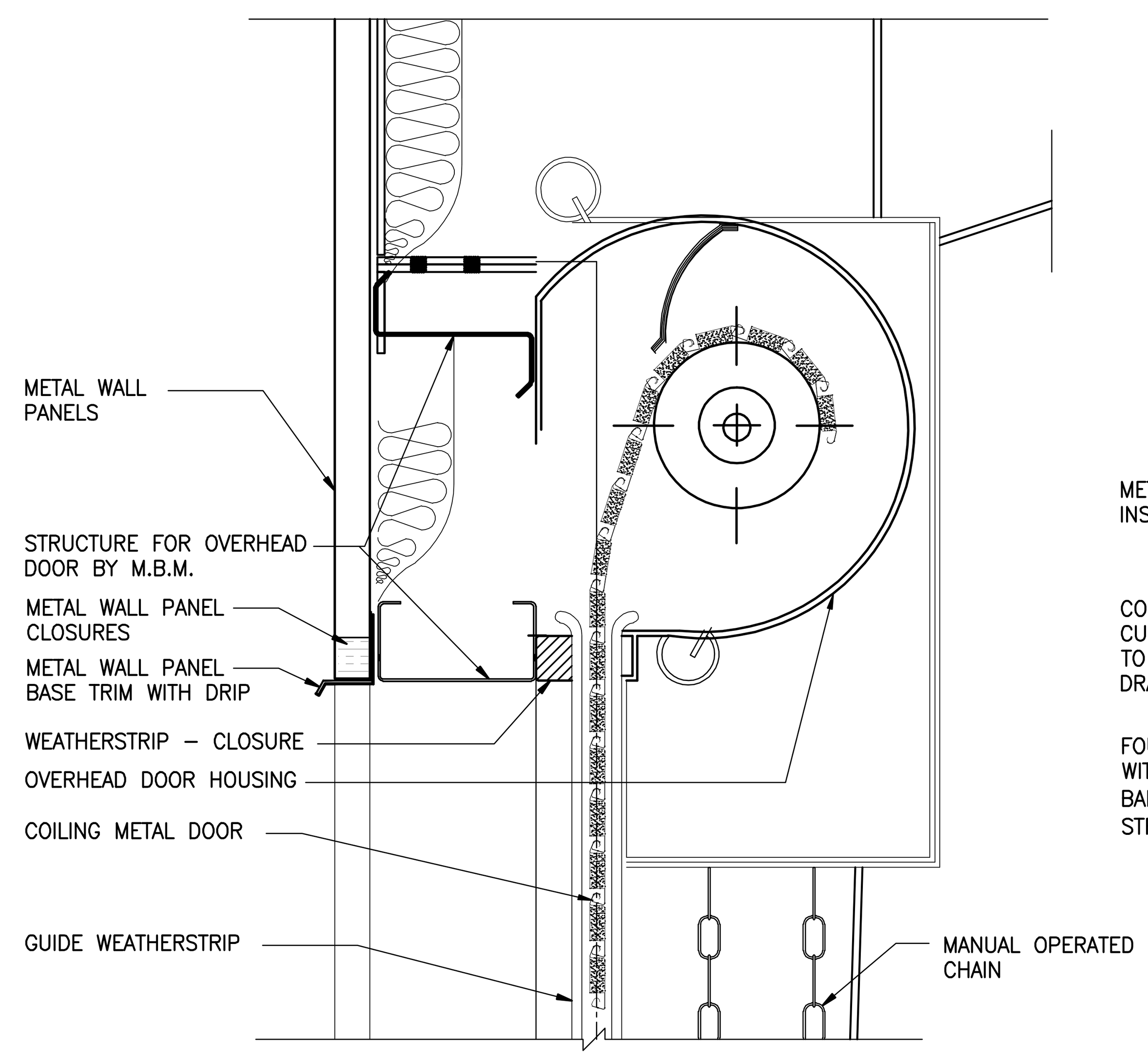

15 COILING DOOR HEAD
SCALE: 1 -1/2"= 1'-0"

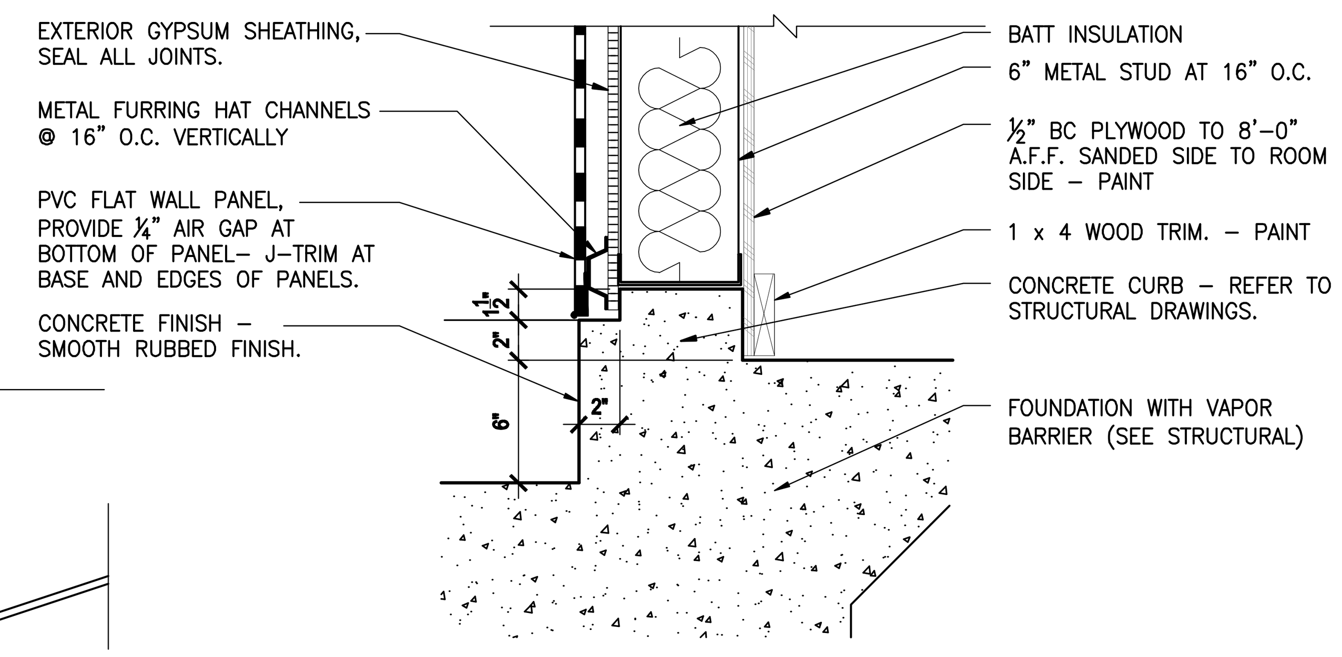

12 WASH BAY - WALL DETAIL
SCALE: 1 -1/2"= 1'-0"

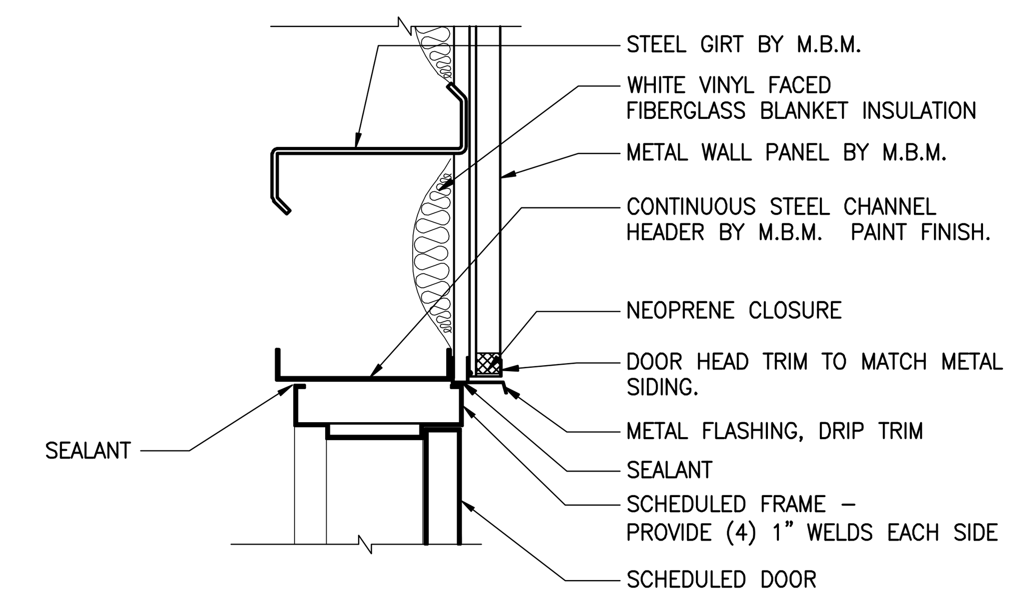

8 EXTERIOR DOOR HEAD
SCALE: 1 -1/2"= 1'-0"

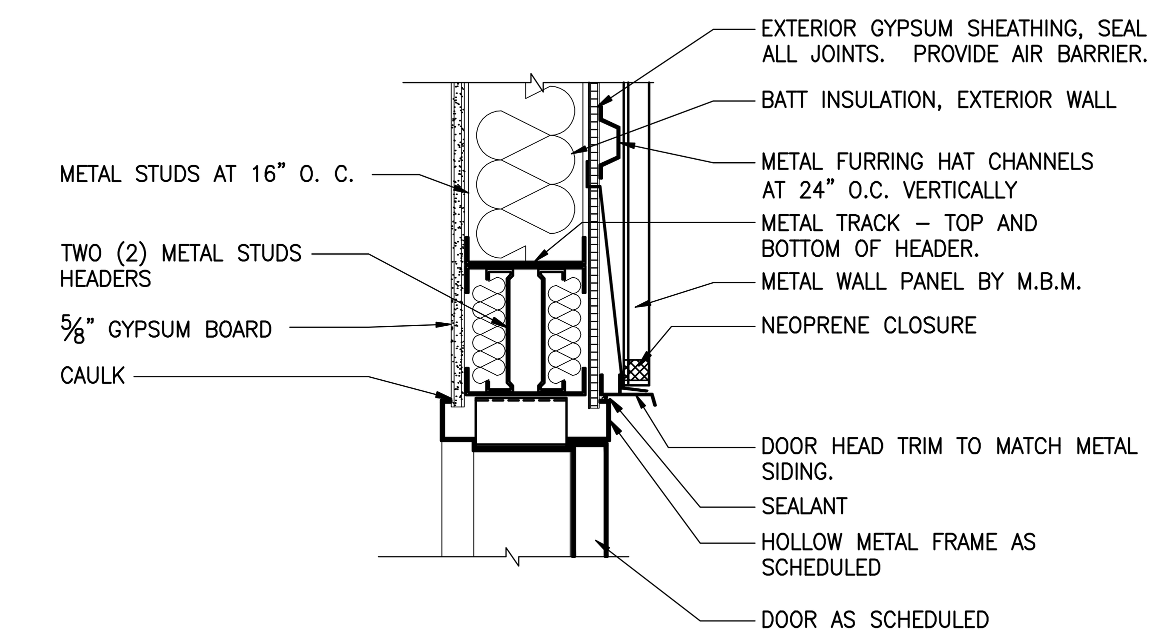

4 EXTERIOR DOOR HEAD
SCALE: 1 -1/2"= 1'-0"

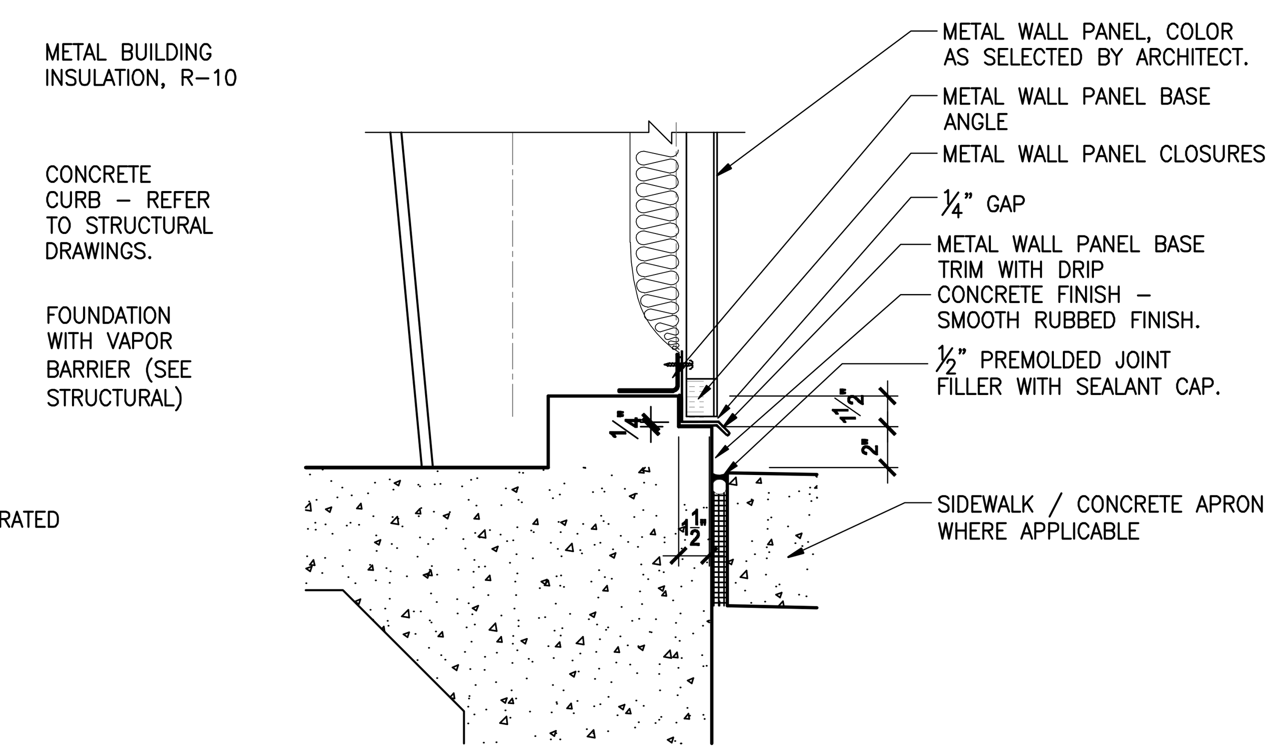

11 EXTERIOR WALL DETAIL
SCALE: 1 -1/2"= 1'-0"

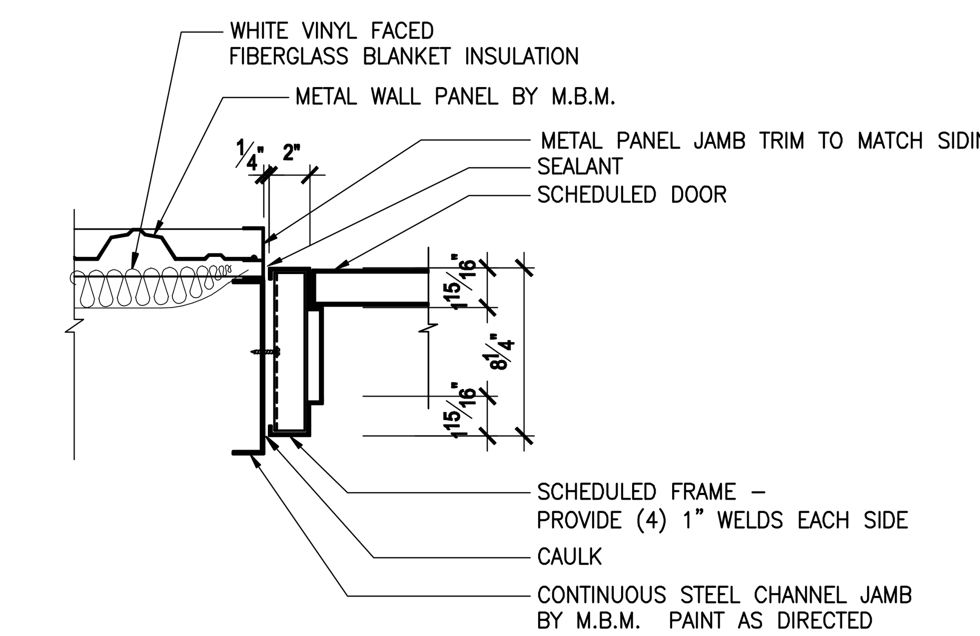

7 EXTERIOR DOOR JAMB
SCALE: 1 -1/2"= 1'-0"

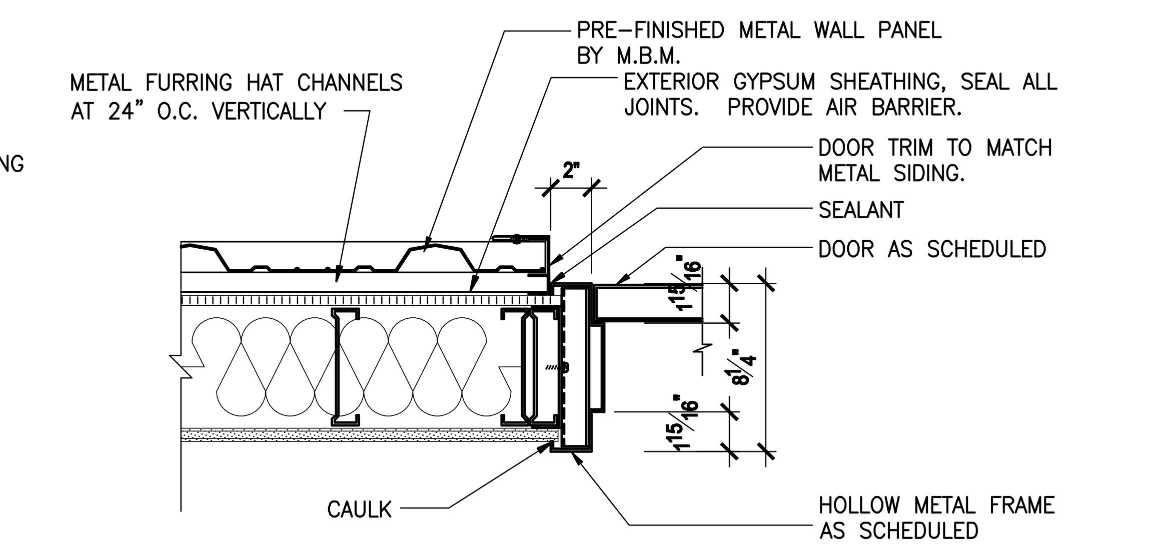

3 EXTERIOR DOOR JAMB
SCALE: 1 -1/2"= 1'-0"

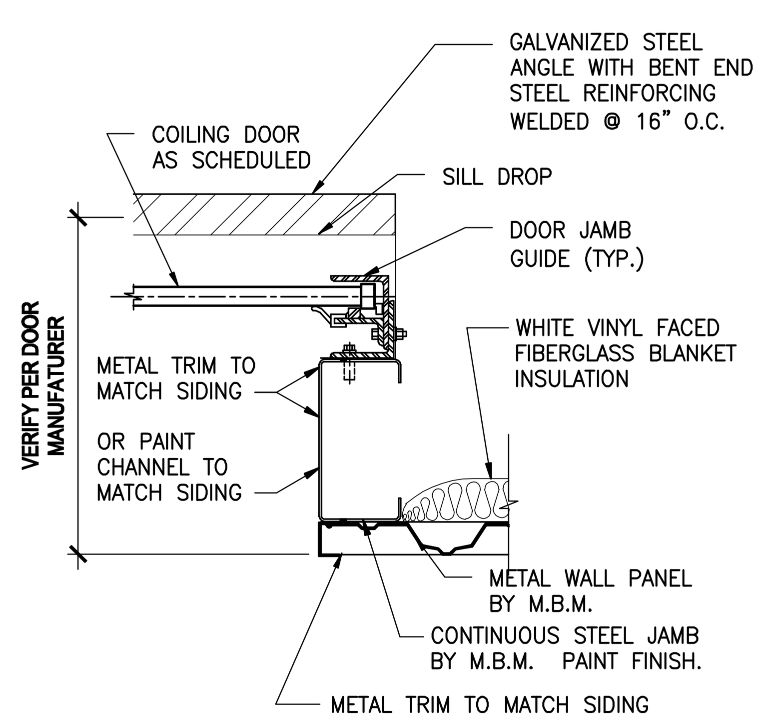

14 COILING DOOR JAMB
SCALE: 1 -1/2"= 1'-0"

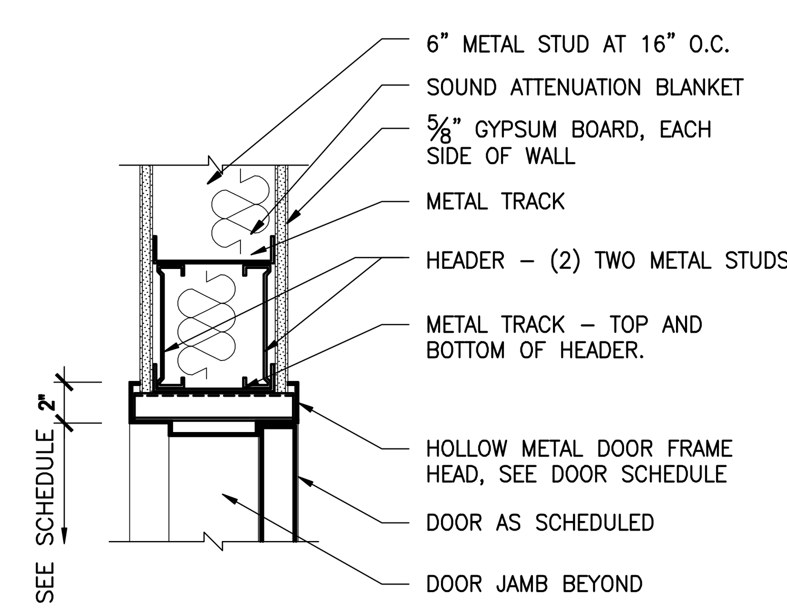

10 INTERIOR DOOR HEAD
SCALE: 1 -1/2"= 1'-0"

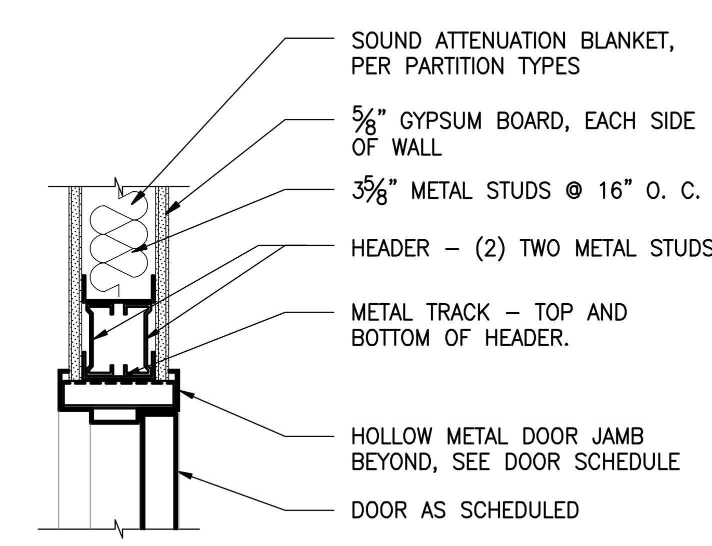

6 INTERIOR DOOR HEAD
SCALE: 1 -1/2"= 1'-0"

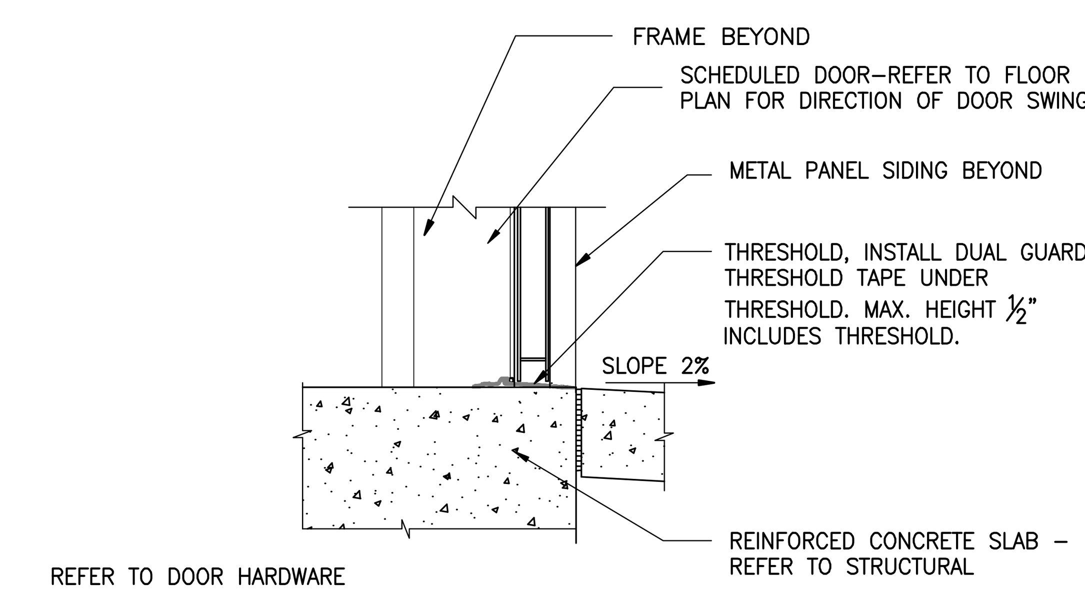

2 EXTERIOR DOOR SILL
SCALE: 1 -1/2"= 1'-0"

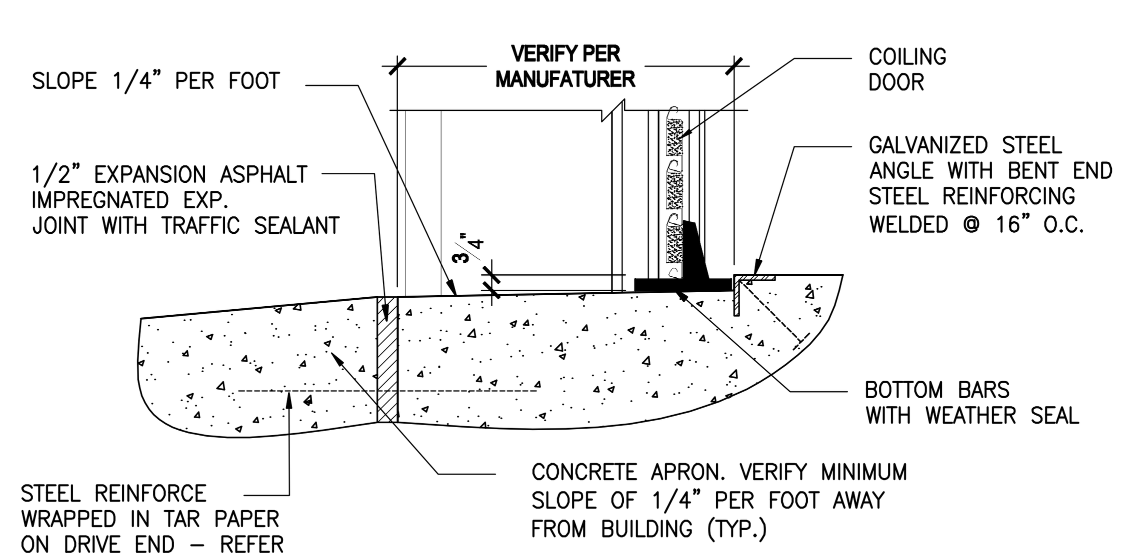

13 COILING DOOR SILL
SCALE: 1 -1/2"= 1'-0"

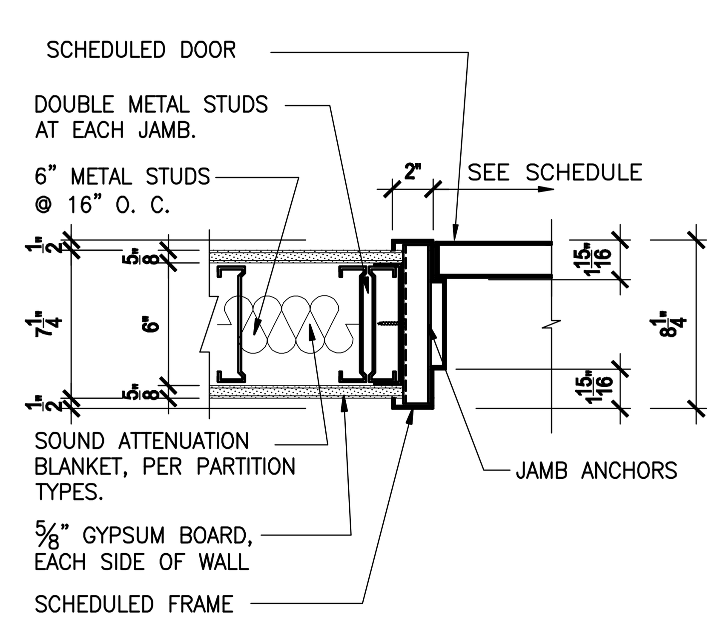

9 INTERIOR DOOR JAMB
SCALE: 1 -1/2"= 1'-0"

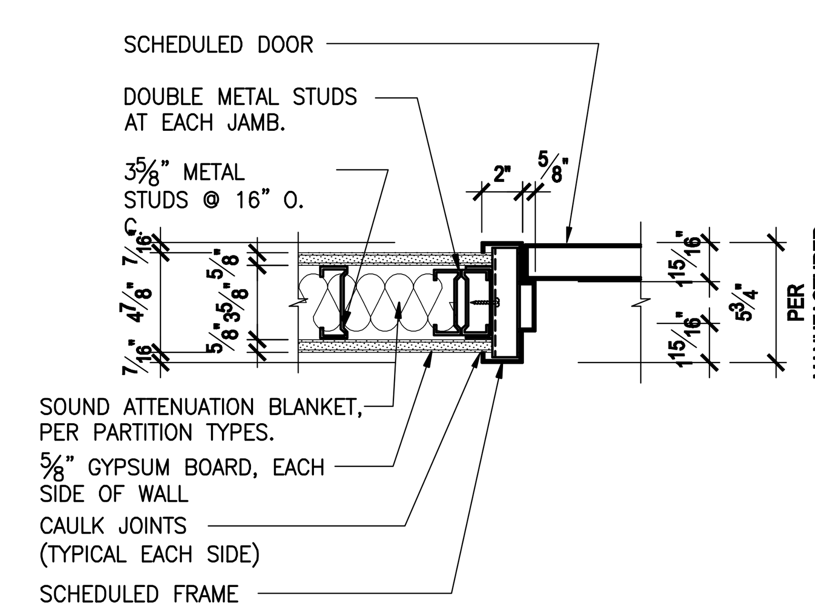

5 INTERIOR DOOR JAMB
SCALE: 1 -1/2"= 1'-0"

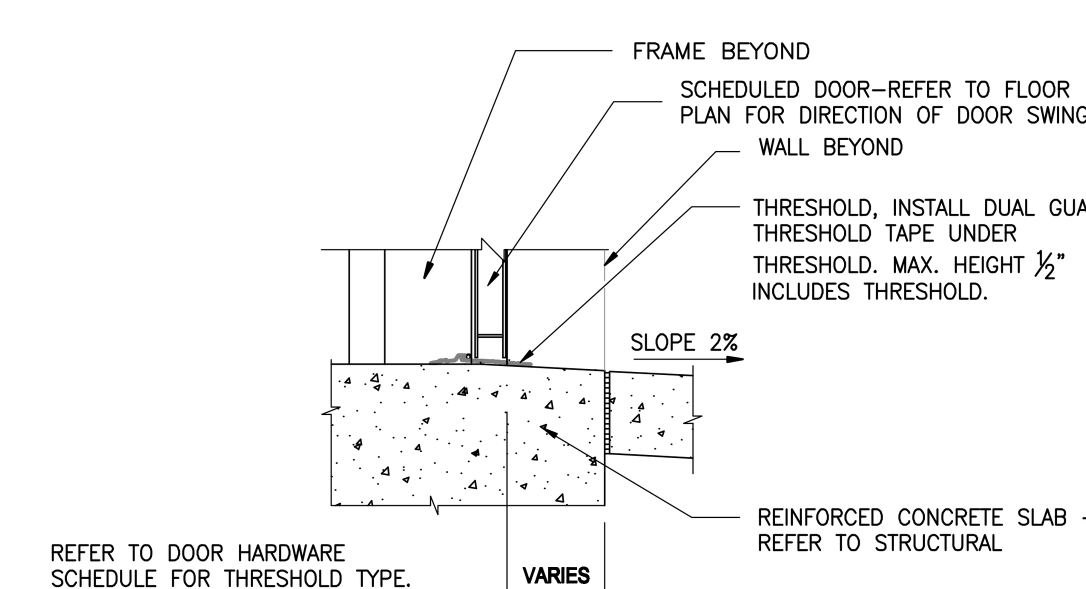

1 EXTERIOR DOOR SILL
SCALE: 1 -1/2"= 1'-0"

DOOR DETAILS

Texas Department of Transportation
125 E. 11th Street
Austin, Texas 78701-2483
(512) 416-3848

Copyright © 2005 Texas Department of Transportation

THIS DOCUMENT IS RELEASED FOR THE PURPOSE OF INFORMATION ONLY
NOT FOR REGULATORY APPROVAL, PERMITTING, OR CONSTRUCTION.

EDCOUCH MAINTENANCE FACILITY
HIDALGO COUNTY, EDCOUCH TEXAS
PHARR DISTRICT

Revisions

Drawn by: RB/EE
Project No.
Date 05-26-2009
Sheet No.
A9.2
of 28 sheets

NOTE: THIS DRAWING WAS CREATED FOR PRODUCTION ON 22" x 34" SHEET SIZE. DO NOT SCALE PRINTS.

CADFILE: T:\MNTFM\D02FTW\CBC4704-00-857\02-77-470400857\Acad\prototypical pdfs\edcouch\Acad\Arch\684_A9_2.dwg Plotted: Fri. Aug. 07, 2009 @ 11:16 AM By: MBAZAN

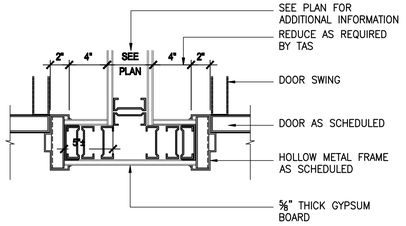

16 DOOR / WALL OFFSET
SCALE: 1-1/2" = 1'-0"

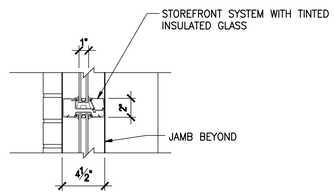

12 WINDOW JAMB
SCALE: 1-1/2" = 1'-0"

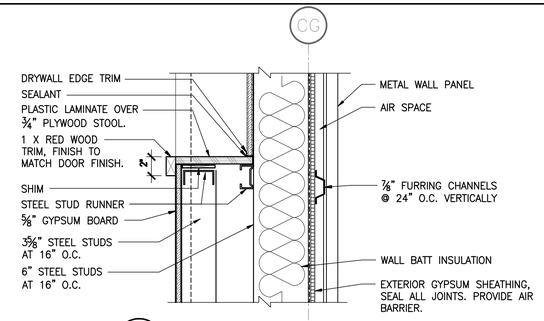

8 WALL/STOOL DETAIL
SCALE: 1-1/2" = 1'-0"

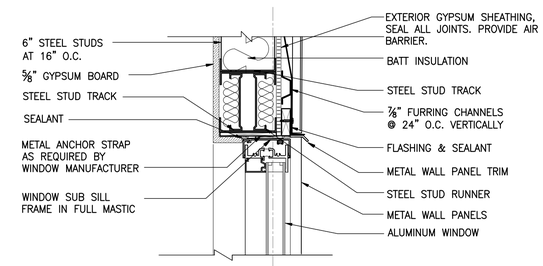

4 WINDOW HEAD
SCALE: 1-1/2" = 1'-0"

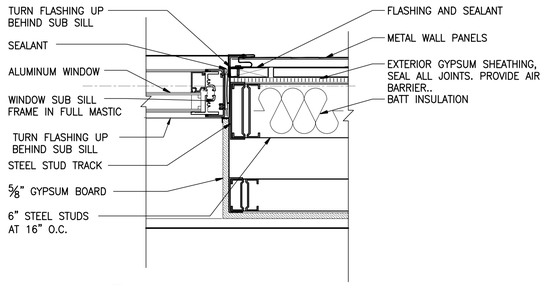

15 WINDOW JAMB
SCALE: 1-1/2" = 1'-0"

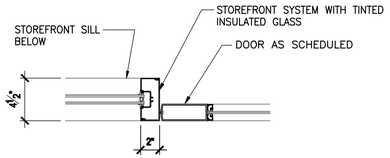

11 DOOR JAMB / HEAD SIMILAR
SCALE: 1-1/2" = 1'-0"

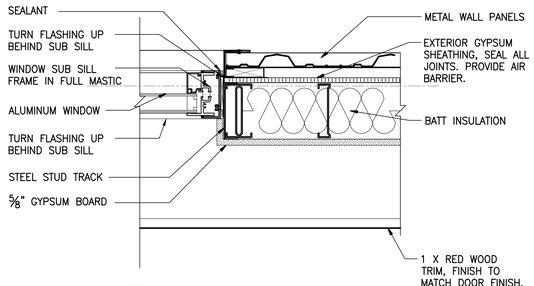

7 WINDOW JAMB
SCALE: 1-1/2" = 1'-0"

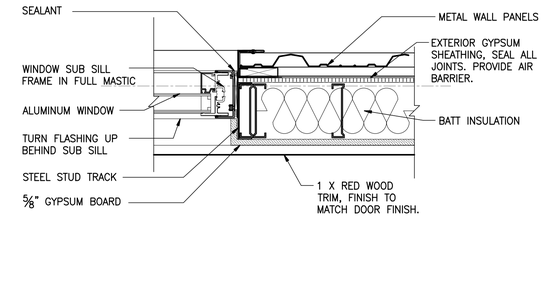

3 WINDOW JAMB
SCALE: 1-1/2" = 1'-0"

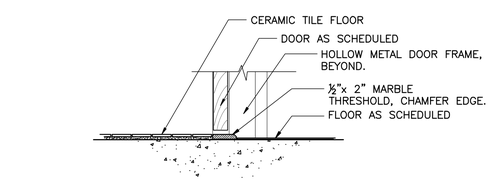

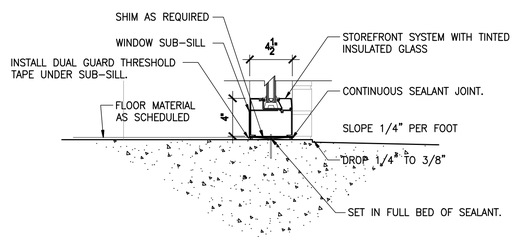

14 DOOR THRESHOLD DETAIL
SCALE: 1-1/2" = 1'-0"

10 WINDOW SILL
SCALE: 1-1/2" = 1'-0"

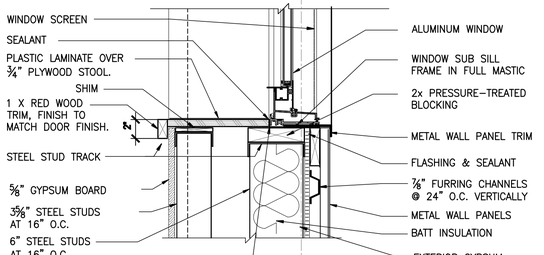

6 WINDOW JAMB
SCALE: 1-1/2" = 1'-0"

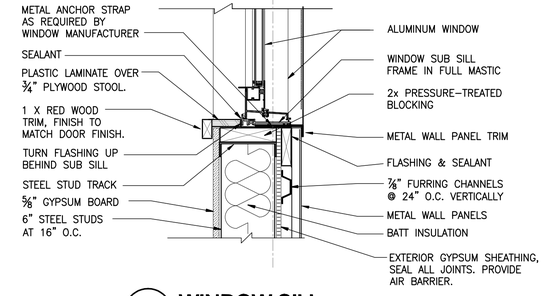

2 WINDOW SILL
SCALE: 1-1/2" = 1'-0"

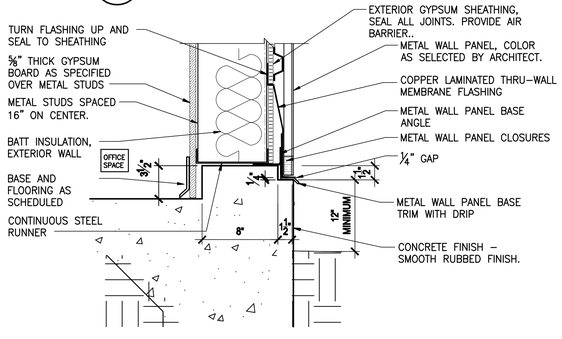

13 METAL SIDING BASE DETAIL
SCALE: 1-1/2" = 1'-0"

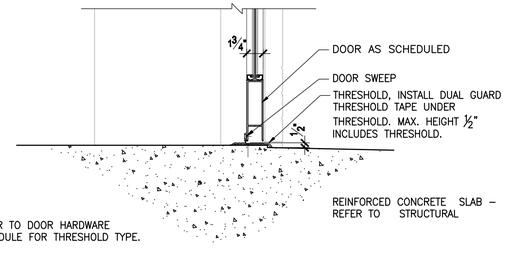

9 DOOR SILL
SCALE: 1-1/2" = 1'-0"

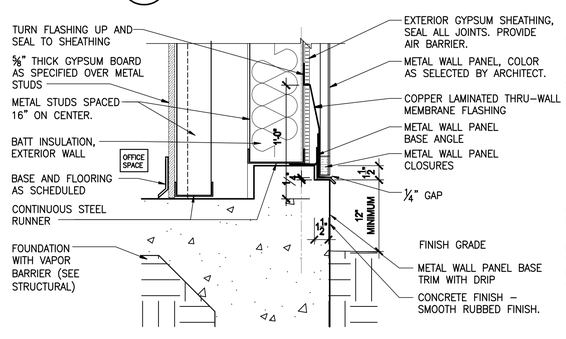

5 METAL SIDING BASE DETAIL
SCALE: 1-1/2" = 1'-0"

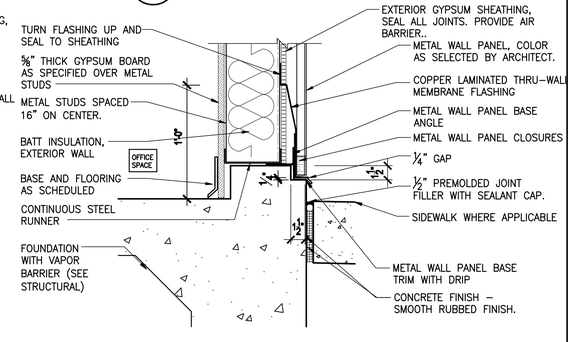

1 METAL SIDING BASE DETAIL
SCALE: 1-1/2" = 1'-0"

WINDOW AND DOOR DETAILS

NOTE: THIS DRAWING WAS CREATED FOR PRODUCTION ON 22" x 34" SHEET SIZE. DO NOT SCALE PRINTS.

Texas Department of Transportation
125 E. 11th Street
Austin, Texas 78701-2483
(512) 416-2000

Copyright © 2005 Texas Department of Transportation

THIS DOCUMENT IS RELEASED FOR THE PURPOSE OF
INFORMATION ONLY
NOT FOR REGULATORY
APPROVAL, PERMITTING,
OR CONSTRUCTION.

EDCOUCH
MAINTENANCE FACILITY
HIDALGO COUNTY, EDCOUCH TEXAS
PHARR DISTRICT

Revisions

Drawn by: RB/EE
Project No.
Date 05-26-2009
Sheet No.
A9.3
of 28 sheets

CADFILE: T:\MAINTFAC\D25FTW\CSC4704-00-837\25-77-4704008837\Acad\projects\plot\slocouch\Acad\Arch\894_A9_3.dwg Plotted: Fri, Aug. 07, 2009 @ 11:17 AM By: MBAZAN

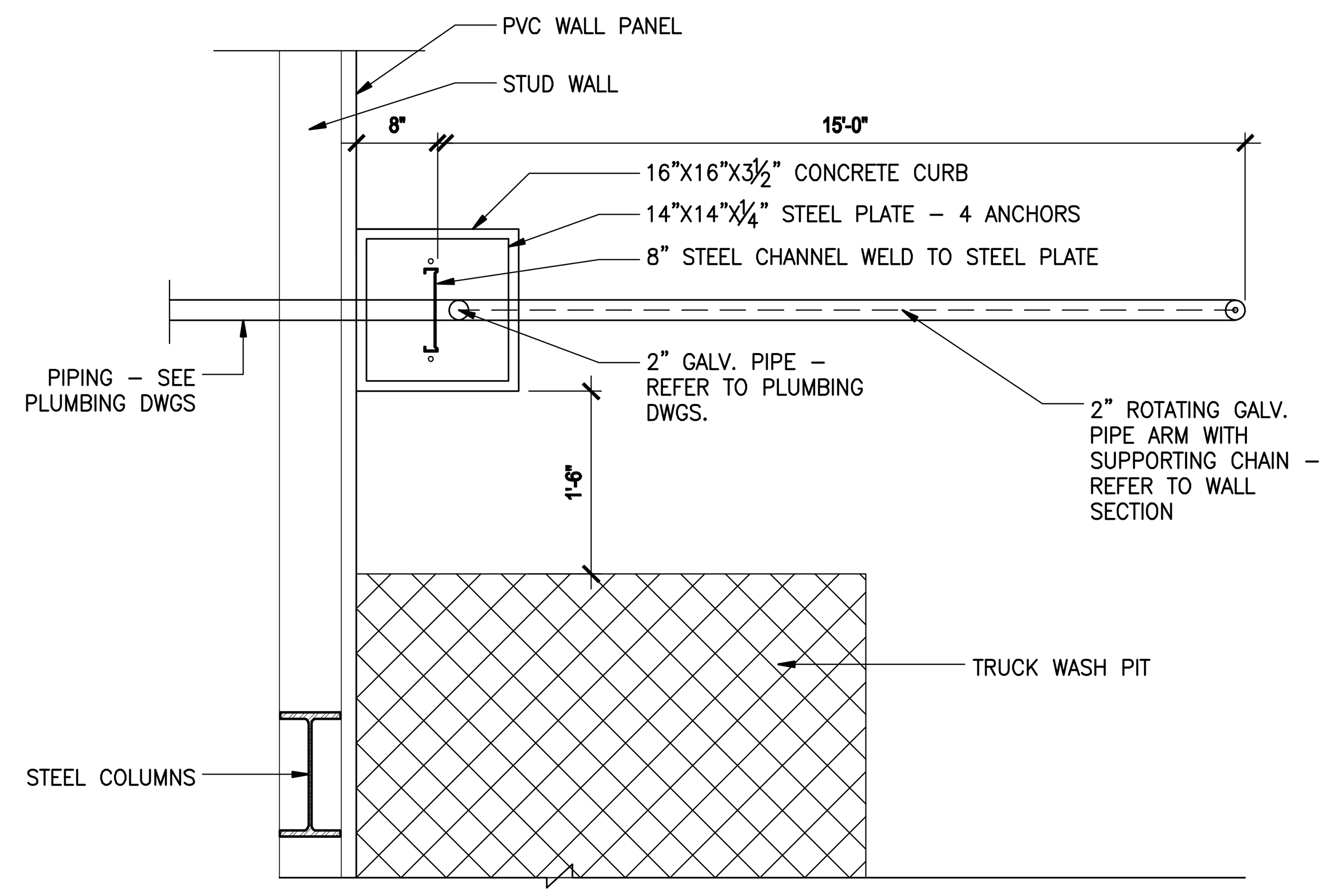

9 PLAN VIEW
SCALE: N.T.S.

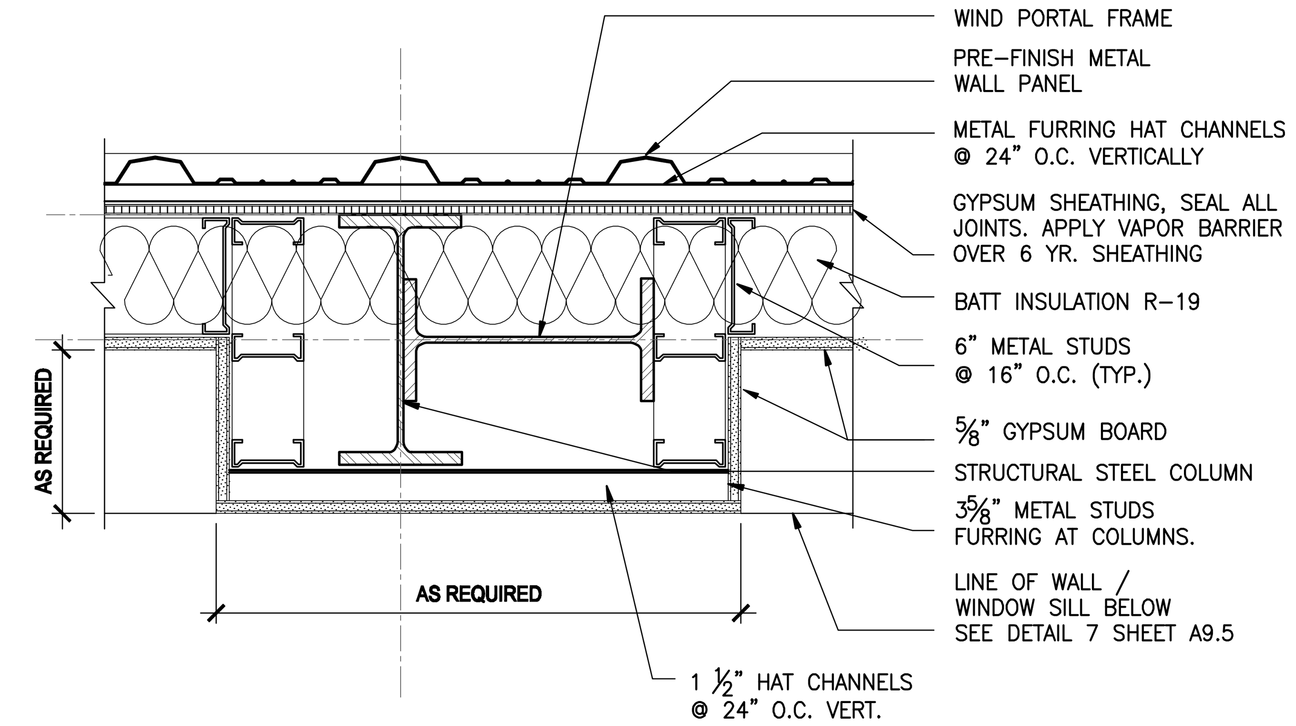

4 PLAN DETAIL
SCALE: 1 -1/2"= 1'-0"

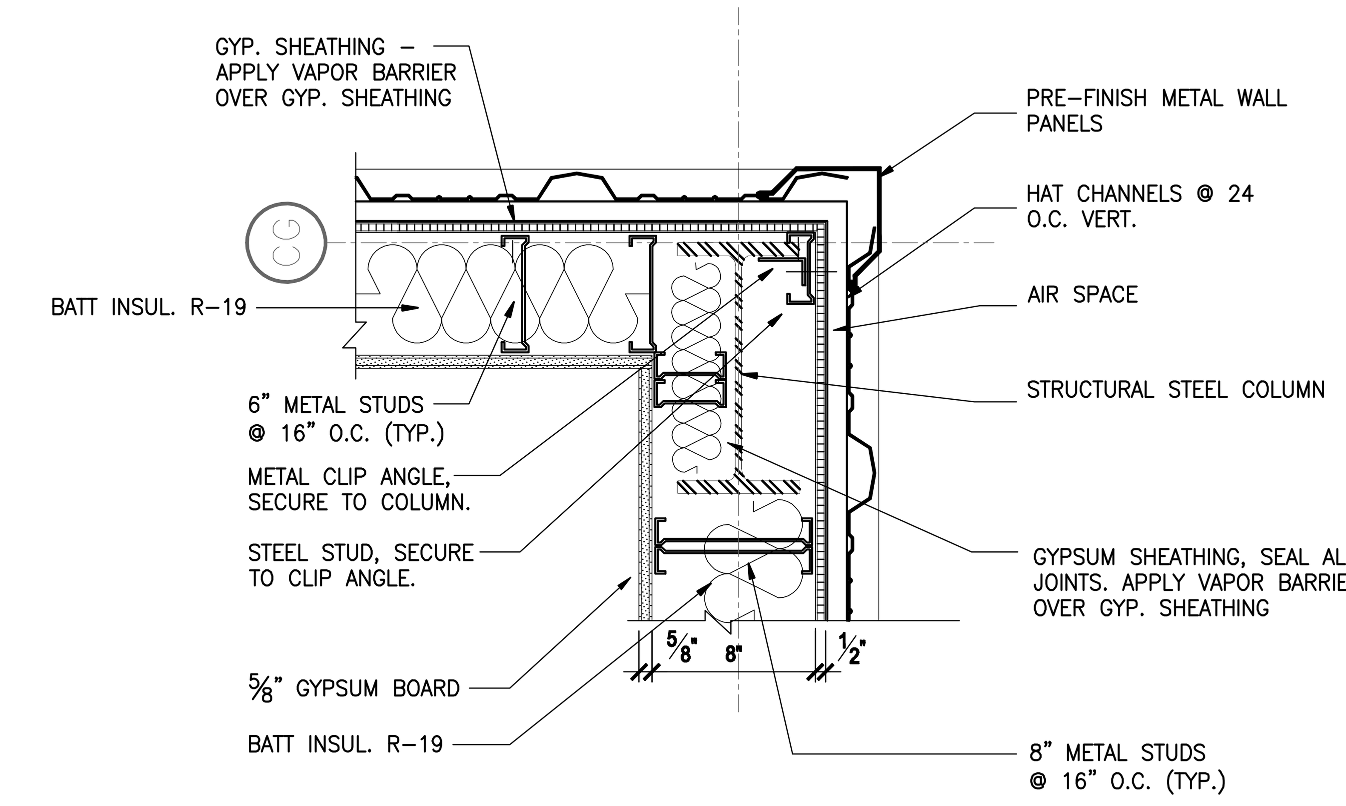

3 PLAN DETAIL
SCALE: 1 -1/2"= 1'-0"

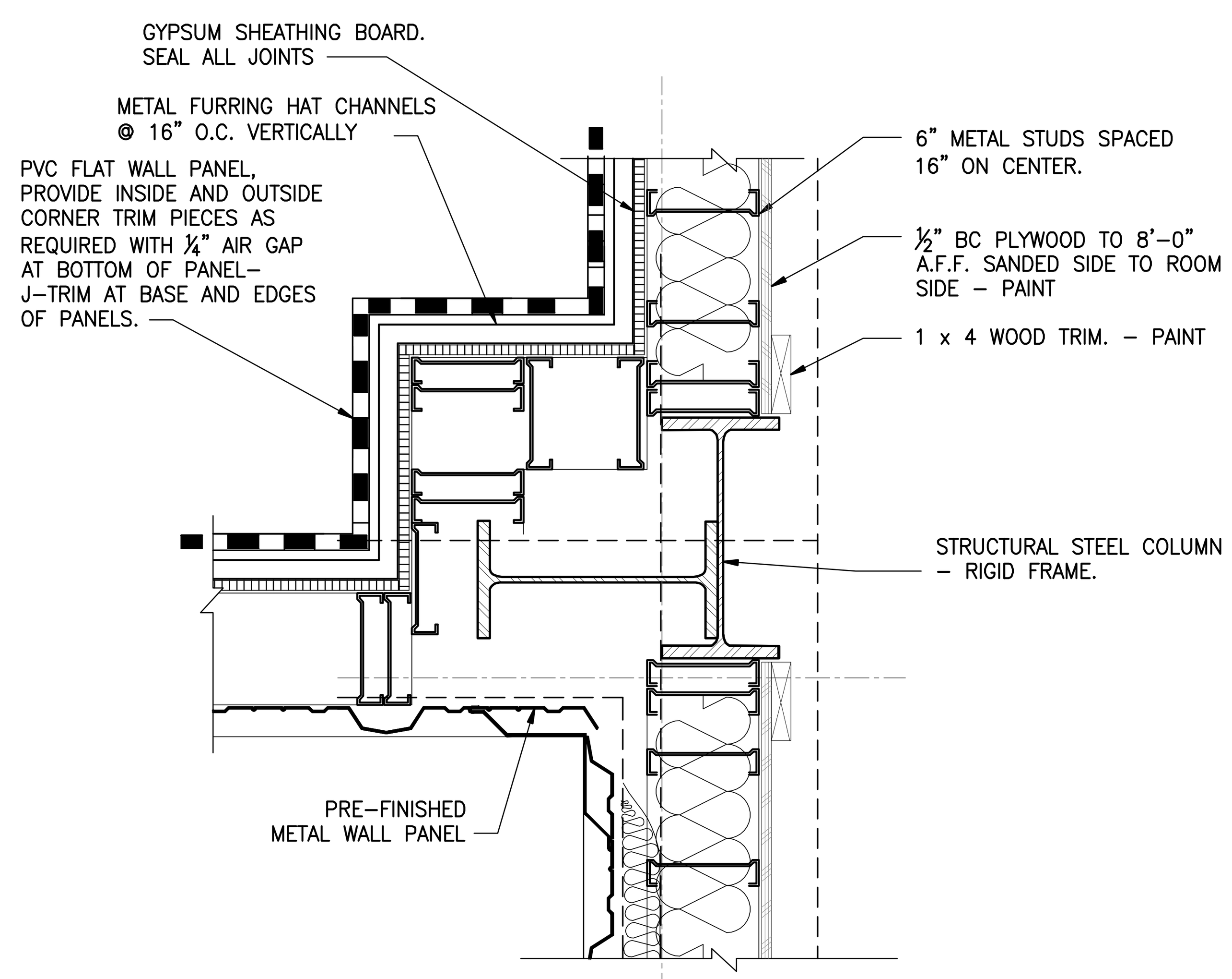

8 PLAN DETAIL
SCALE: 1 -1/2"= 1'-0"

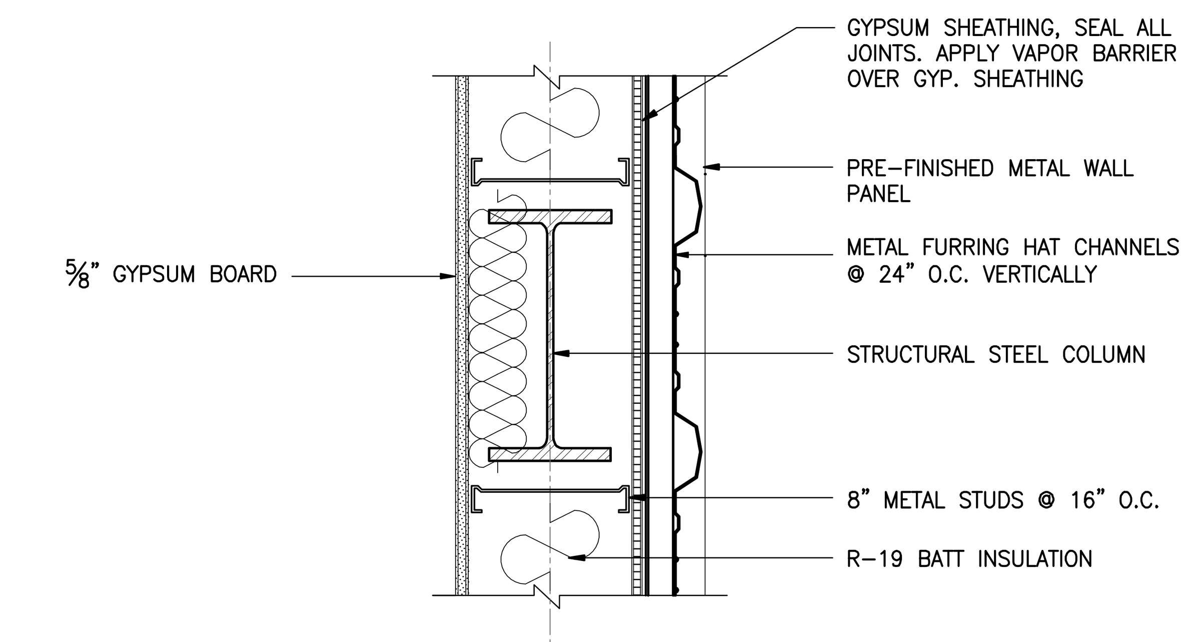

2 PLAN DETAIL
SCALE: 1 -1/2"= 1'-0"

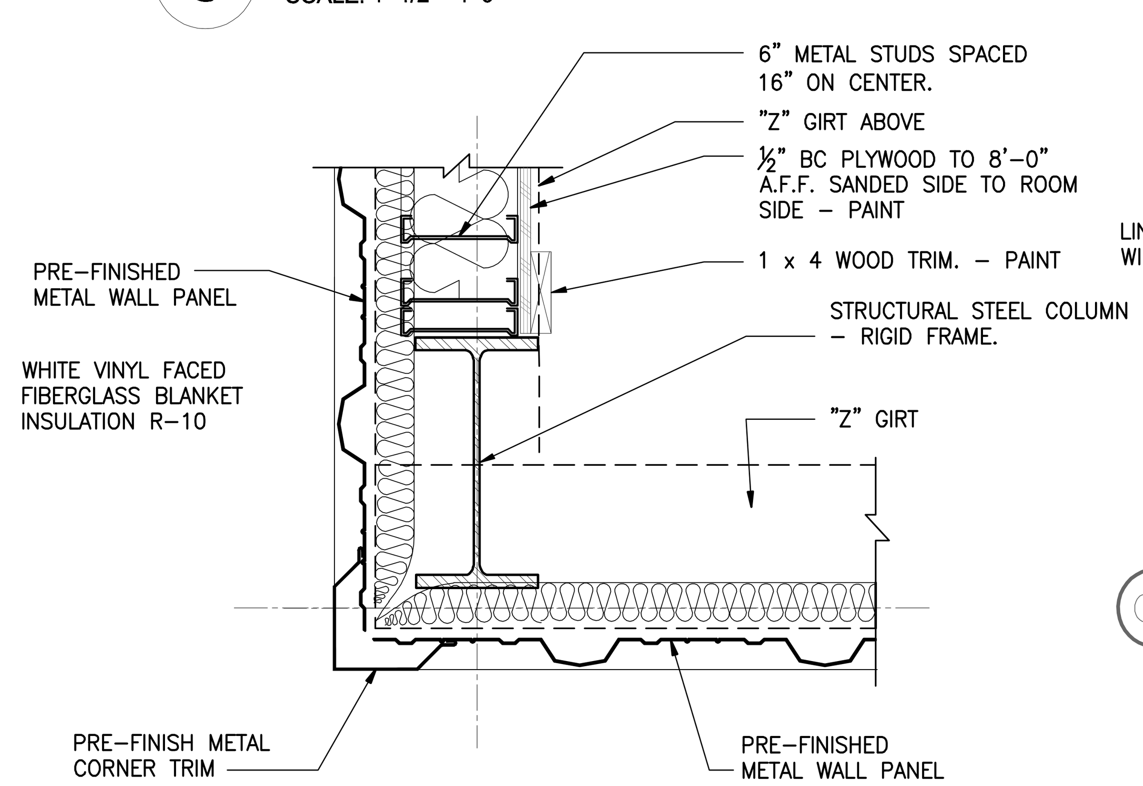

7 PLAN DETAIL
SCALE: 1 -1/2"= 1'-0"

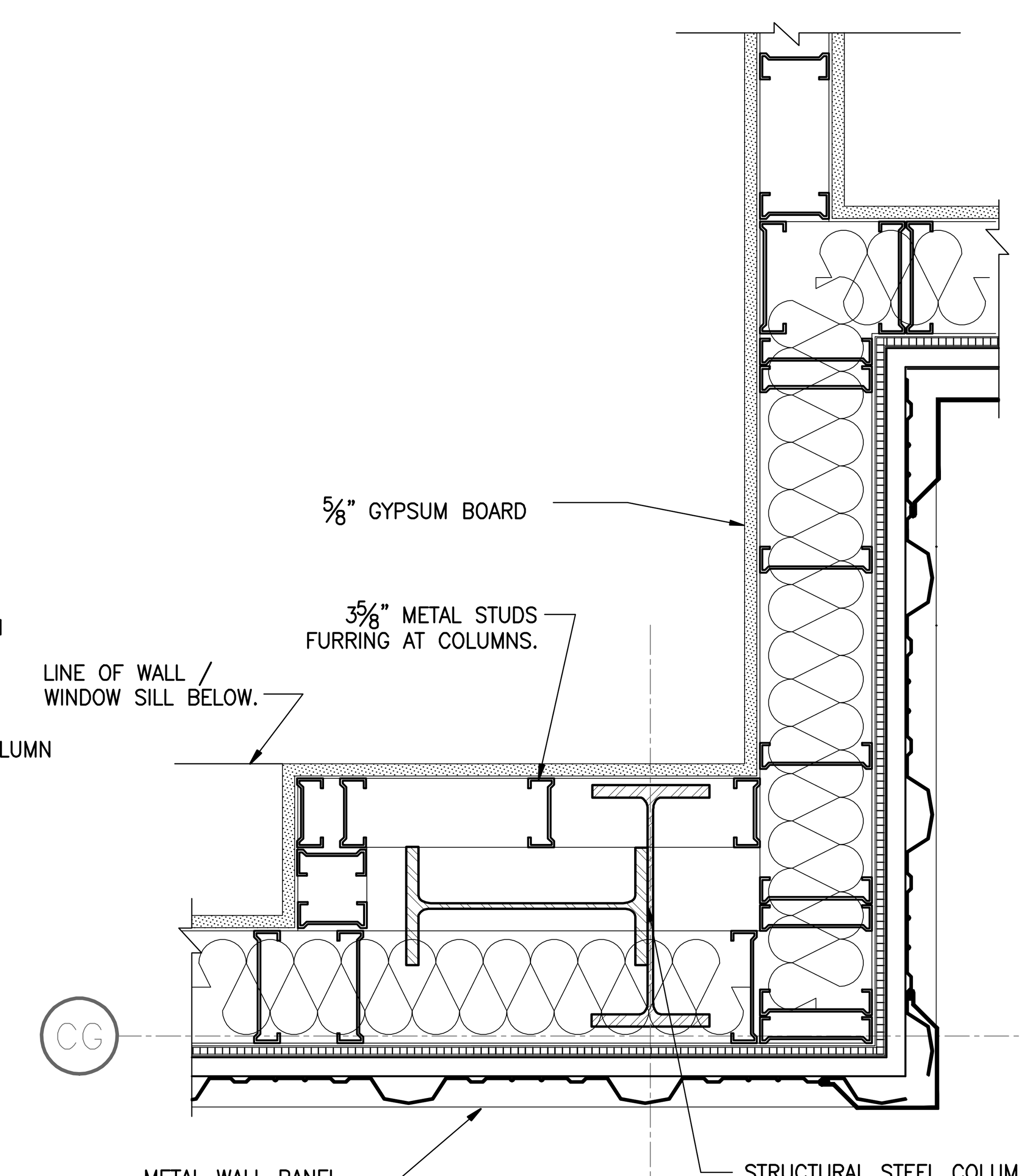

6 PLAN DETAIL
SCALE: 1 -1/2"= 1'-0"

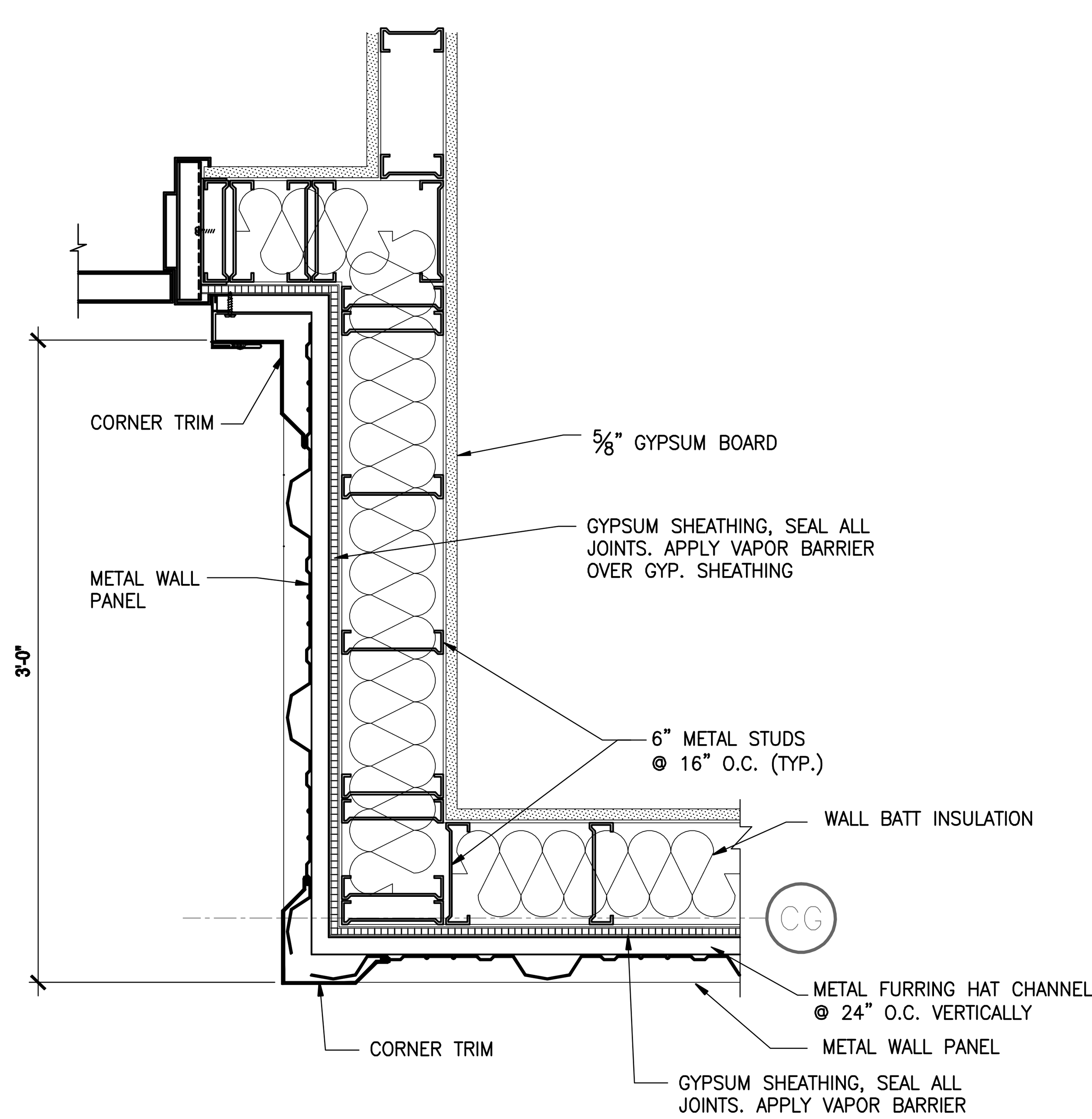

5 PLAN DETAIL
SCALE: 1 -1/2"= 1'-0"

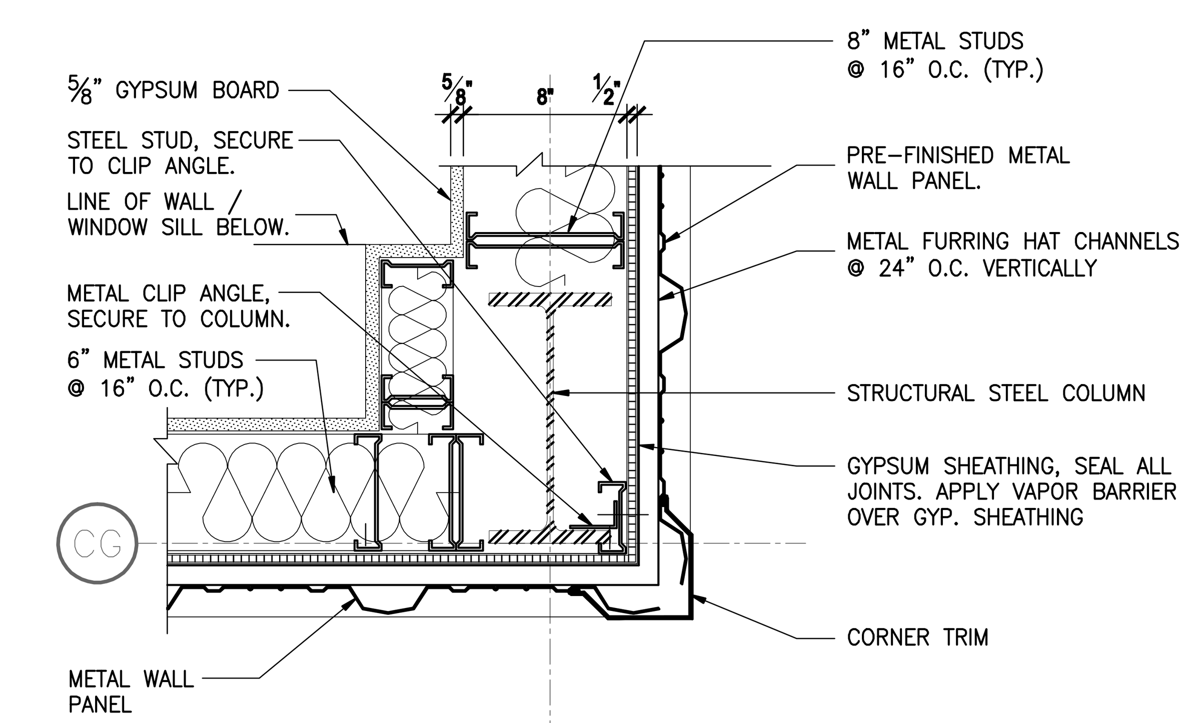

1 PLAN DETAIL
SCALE: 1 -1/2"= 1'-0"

PLAN DETAILS

Texas Department of Transportation
125 E. 11th Street
Austin, Texas 78701-2483
(512) 416-2048
Copyright © 2005 Texas Department of Transportation

THIS DOCUMENT IS RELEASED FOR THE PURPOSE OF INFORMATION ONLY
NOT FOR REGULATORY APPROVAL, PERMITTING, OR CONSTRUCTION.

EDCOUCH MAINTENANCE FACILITY
HIDALGO COUNTY, EDCOUCH TEXAS PHARR DISTRICT

Revisions

Drawn by: RB/EE
Project No.
Date 05-26-2009
Sheet No.
A9.4
of 28 sheets

NOTE: THIS DRAWING WAS CREATED FOR PRODUCTION ON 22" x 34" SHEET SIZE. DO NOT SCALE PRINTS.

CADFILE: T:\MNTFM\D02FTWCBC4704-00-537\02-77-4704005\57\Acad\prototypical pdfs\edcouch\Acad\Arch\A9_4.dwg Plotted: Fri, Aug. 07, 2009 @ 11:17 AM By: MBAZAN

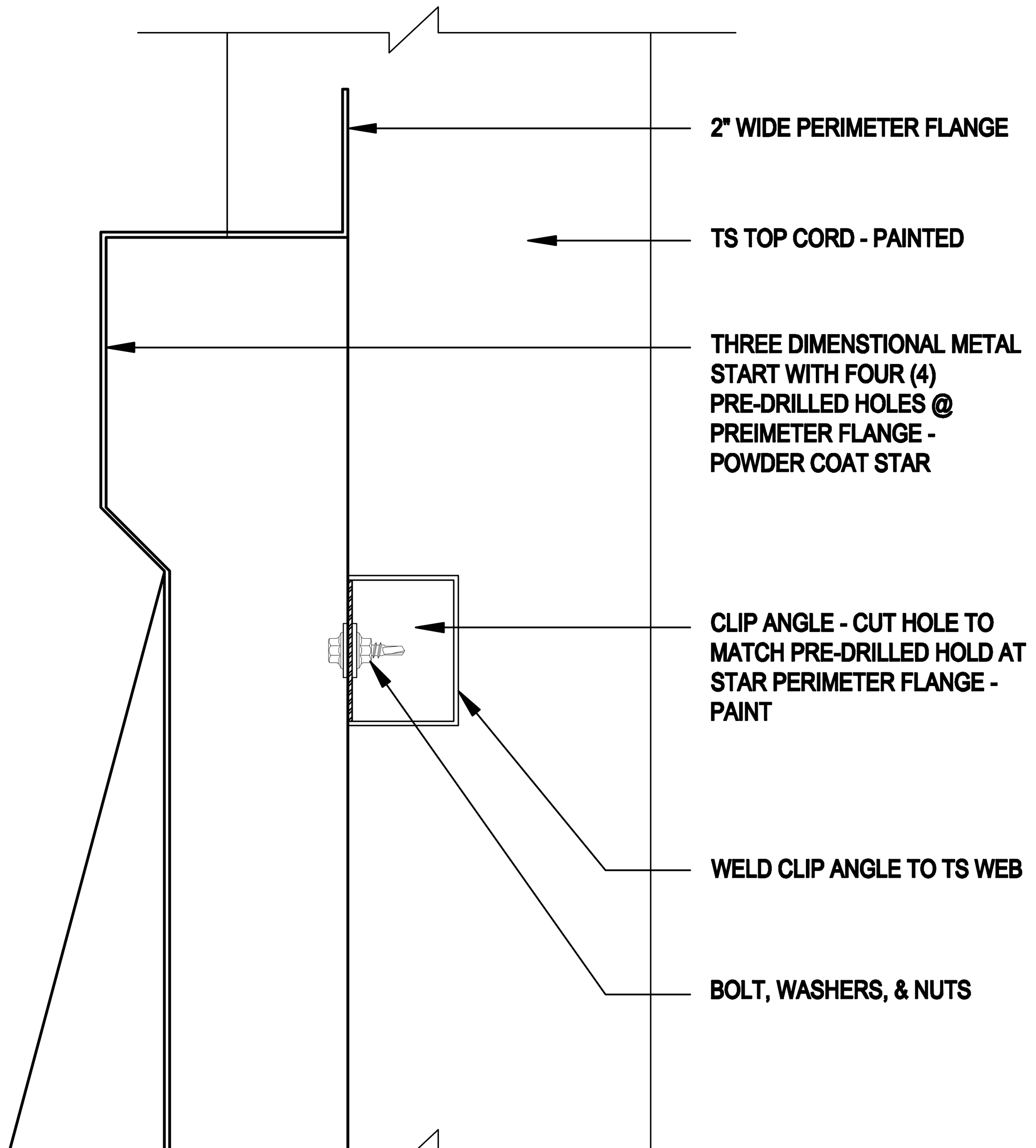

3 STAR ANCHORING DETAIL
SCALE: 6"= 1'-0"

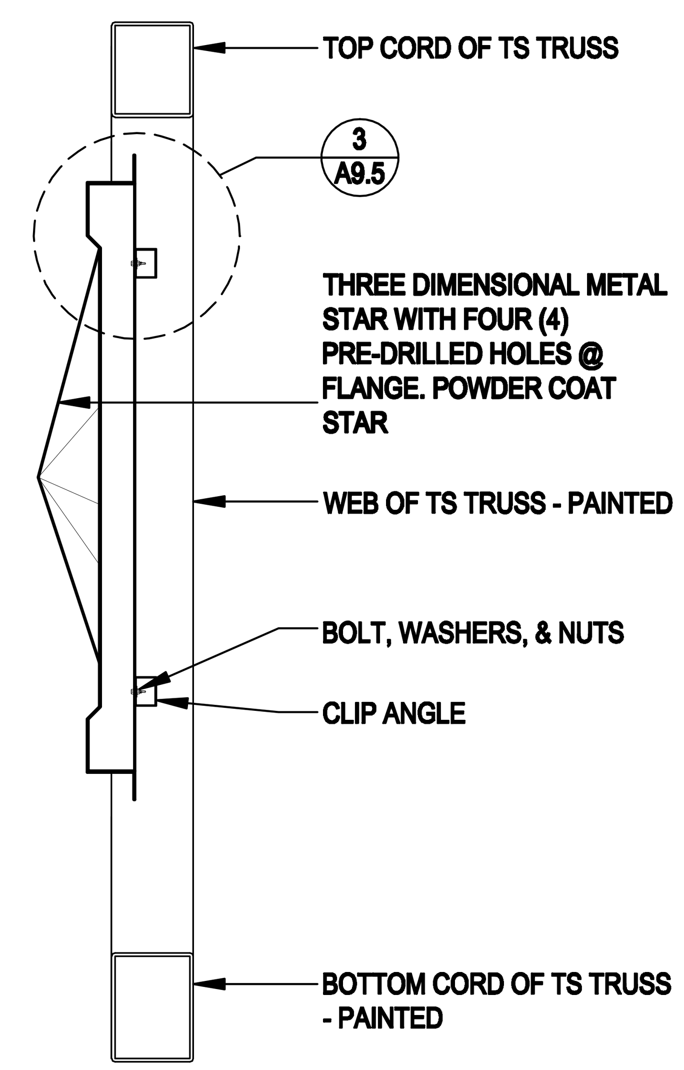

2 SECTION - STAR
SCALE: 1"= 1'-0"

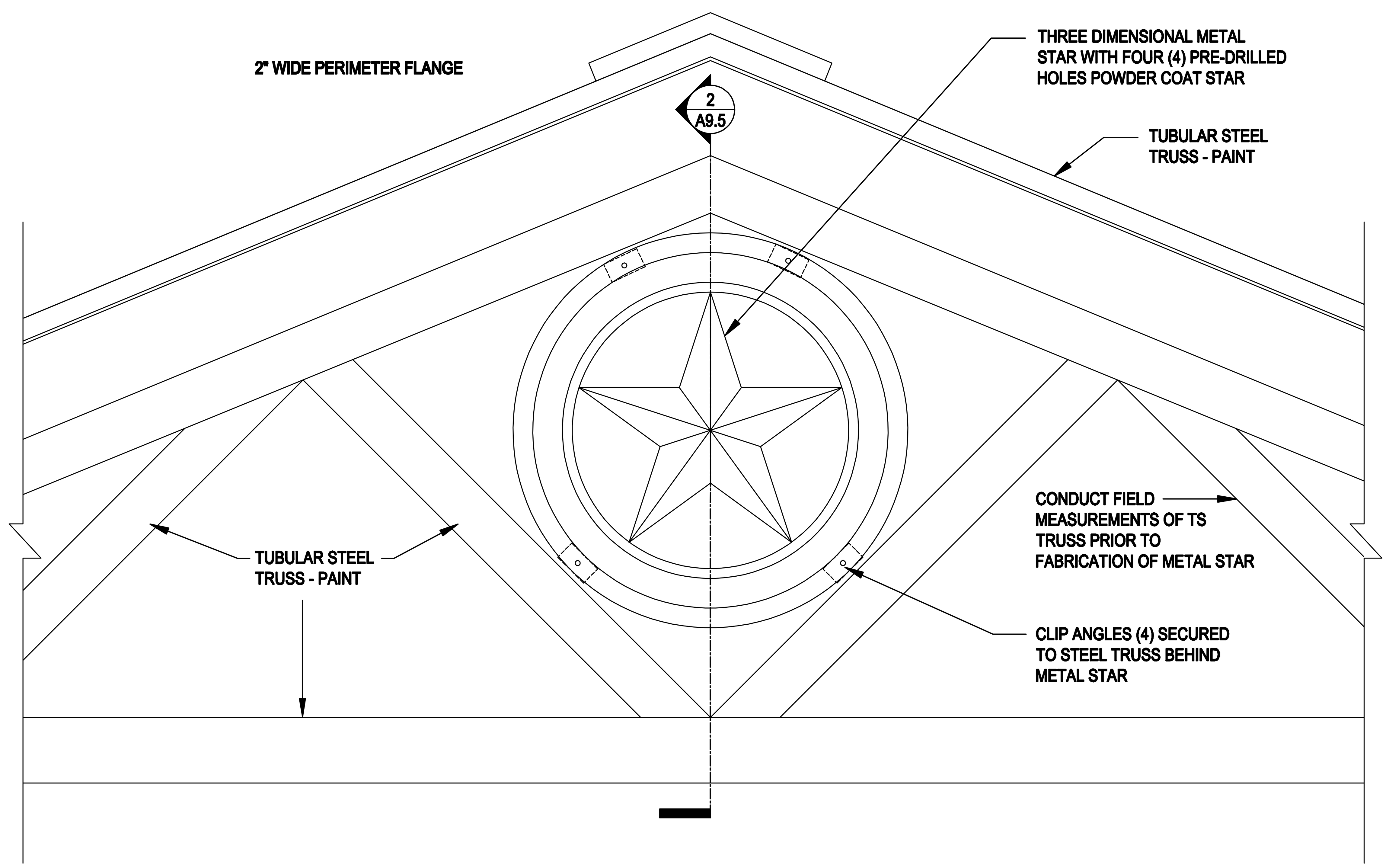

1 ELEVATION - STAR
SCALE: 1"= 1'-0"

STAR DETAILS

Texas Department of Transportation
125 E. 11th Street
Austin, Texas 78701-2483
(512) 416-2048
Copyright © 2005 Texas Department of Transportation

THIS DOCUMENT IS RELEASED FOR THE PURPOSE OF INFORMATION ONLY
NOT FOR REGULATORY APPROVAL, PERMITTING, OR CONSTRUCTION.

EDCOUCH MAINTENANCE FACILITY
HIDALGO COUNTY, EDCOUCH TEXAS
PHARR DISTRICT

Revisions

Drawn by: RB/EE
Project No.
Date 05-26-2009
Sheet No.
A9.5
of 28 sheets

CADFILE: T:\MNT\MD02FTWC\BC-0704-00-837\02-77-470400837\Acad\prototypical pdf\edcouch\Acad\Arch\694_A9_5.dwg Plotted: Fri, Aug. 07, 2009 @ 11:17 AM By: MBAZAN

NOTE: THIS DRAWING WAS CREATED FOR PRODUCTION ON 22" x 34" SHEET SIZE. DO NOT SCALE PRINTS.

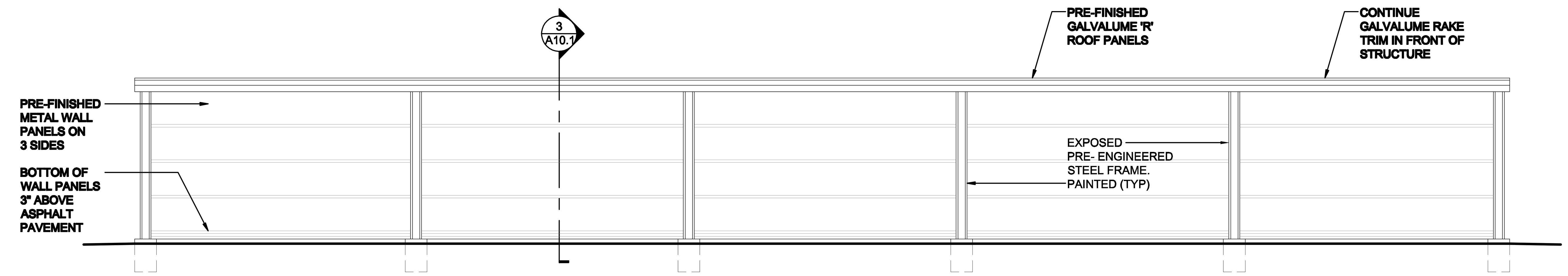

1 FRONT ELEVATION
SCALE: 1/8" = 1'-0"

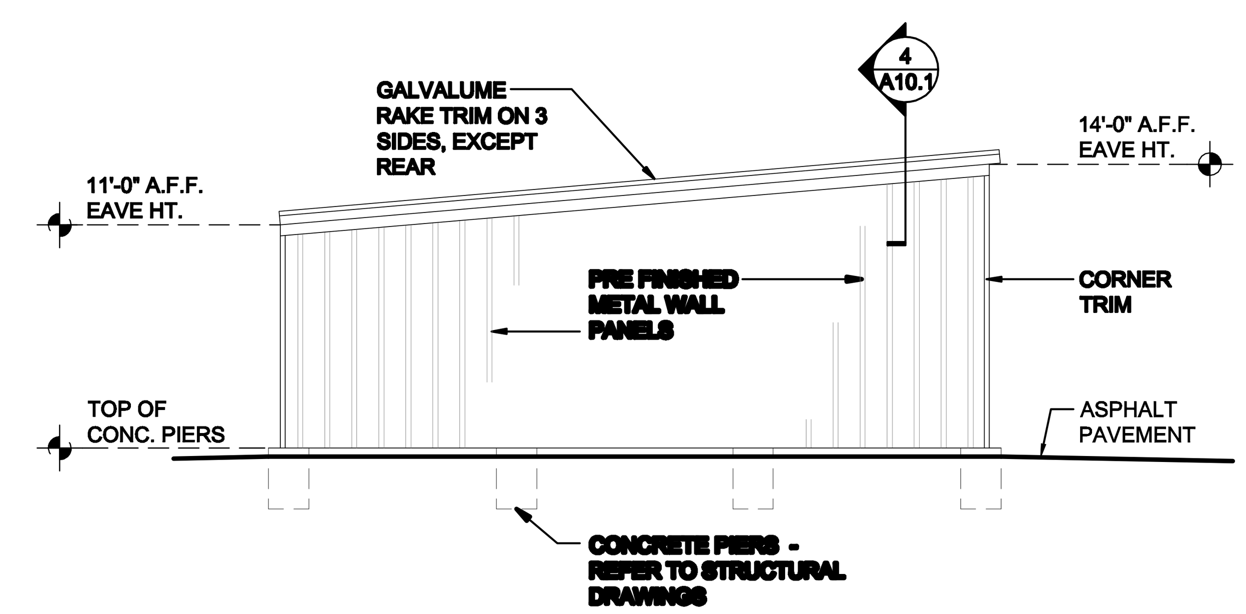

2 TYPICAL SIDE ELEVATION
SCALE: 1/8" = 1'-0"

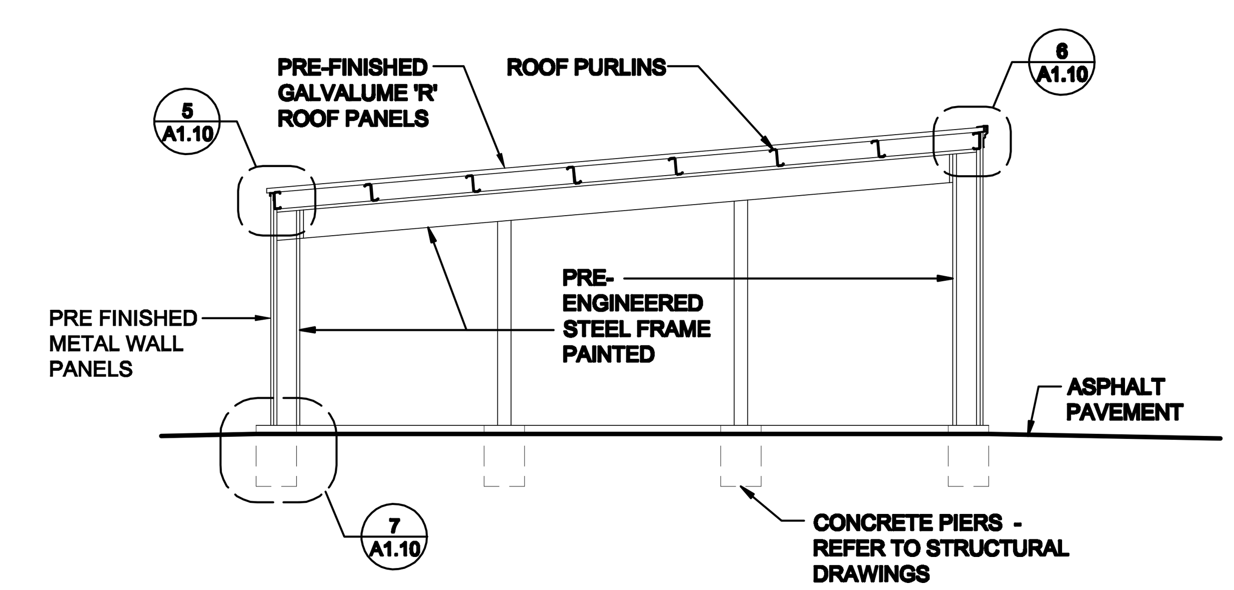

3 SECTION
SCALE: 1/8" = 1'-0"

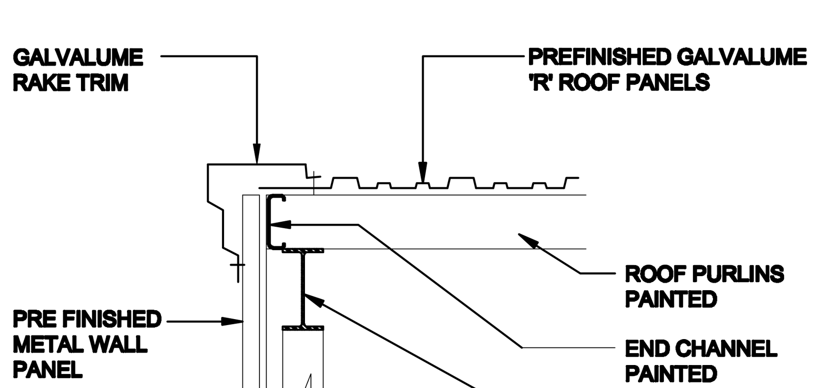

4 RAKE DETAIL
SCALE: NOT TO SCALE

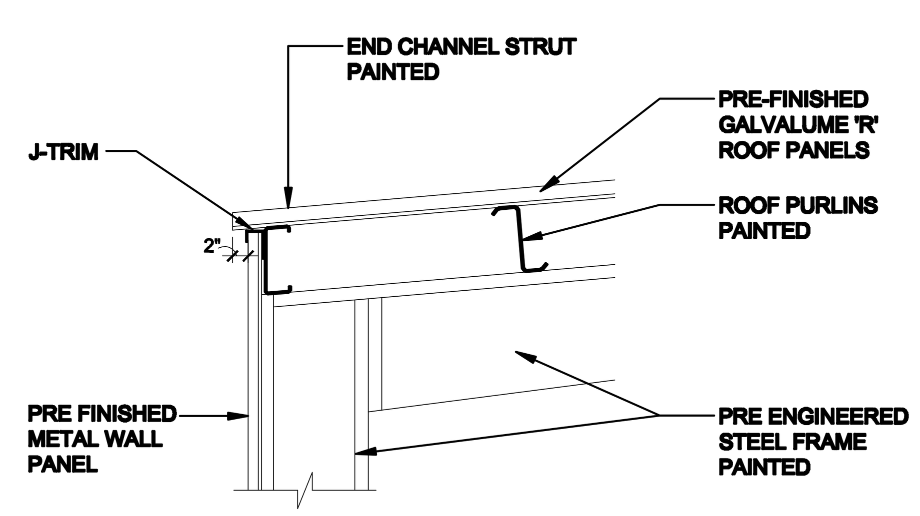

5 EAVE DETAIL - REAR
SCALE: NOT TO SCALE

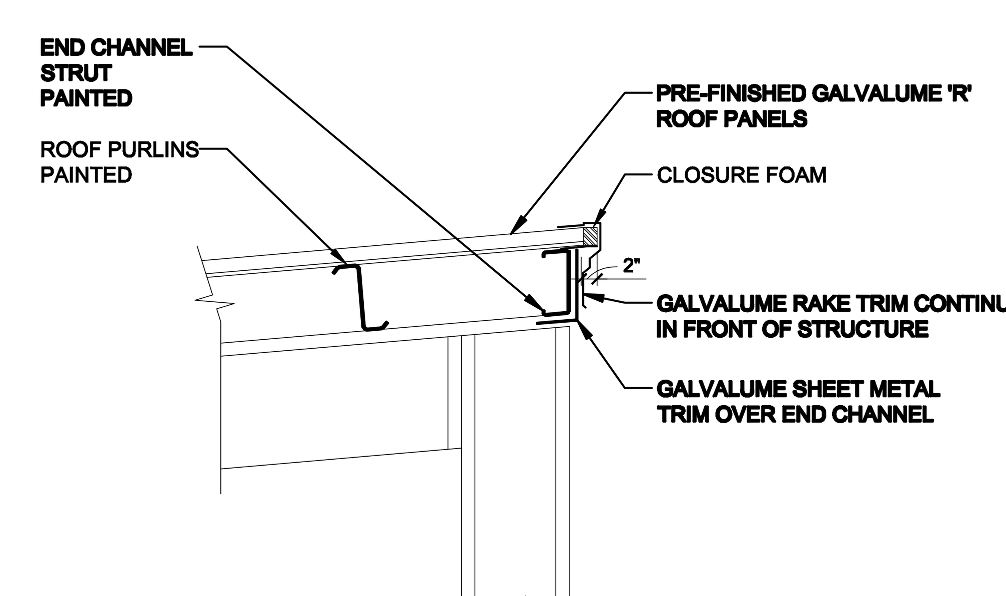

6 EAVE DETAIL - FRONT
SCALE: NOT TO SCALE

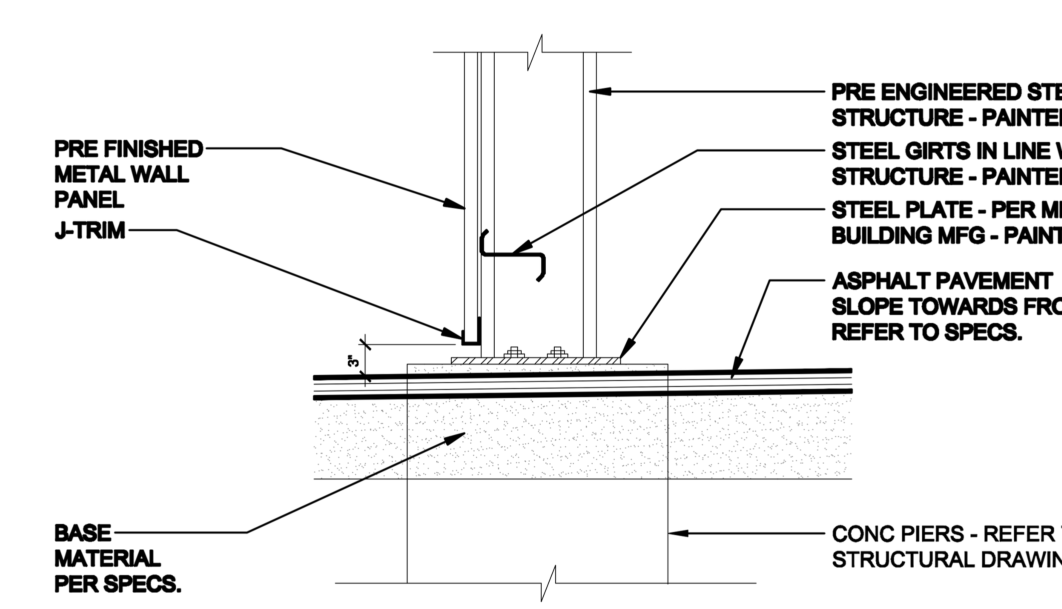

7 COLUMN BASE DETAIL
SCALE: NOT TO SCALE

EQUIPMENT SHED

NOTE: THIS DRAWING WAS CREATED FOR PRODUCTION ON 22" x 34" SHEET SIZE. DO NOT SCALE PRINTS.

CADFILE: T:\MNTFAC\D02FTWCBC\704-00-83702-77-470400557\Acad\prototypical pdfs\edcouch\Acad\Arch\884_A10_1.dwg Plotted: Fri, Aug. 07, 2009 @ 12:08 PM By: MBAZAN

Texas Department of Transportation
125 E. 11th Street
Austin, Texas 78701-2483
(512) 416-3048

Copyright © 2009 Texas Department of Transportation

THIS DOCUMENT IS RELEASED FOR THE PURPOSE OF
INFORMATION ONLY
NOT FOR REGULATORY APPROVAL, PERMITTING, OR CONSTRUCTION.

EDCOUCH MAINTENANCE FACILITY
HIDALGO COUNTY, EDCOUCH TEXAS
PHARR DISTRICT

Revisions

Drawn by: RB/EE

Project No.

Date 05-26-2009

Sheet No.

A10.1

of 28 sheets

STRUCTURAL NOTES

COORDINATION

1. It is the responsibility of the General Contractor to obtain all Contract Documents and Addenda and to submit such documents to all subcontractors and material suppliers prior to the submittal of shop drawings, fabrication of any structural members, and construction.
2. The General Contractor shall compare the Architectural, Structural Mechanical, Electrical, Plumbing, and other series drawings and report any discrepancies between each set of drawings and within each set of drawings prior to fabrication and installation of any structural members.
3. Only larger sleeve openings and framed openings in structural framing component members are indicated on the Structural Drawings. However, all sleeves, inserts and openings, including frames and/or sleeves shall be provided for passage, provision and/or incorporation of the work of the contract, including but not limited to Mechanical, Electrical and Plumbing work. This work shall include the coordination of sizes, alignment, dimensions, position, locations, elevations and grades as required to serve the intended purpose. Openings not indicated on the Structural Drawings, but required as noted above, shall be submitted to the Engineer for review.
4. Refer to Architectural, Mechanical, Electrical and Plumbing drawings for floor elevations, slopes, drains and location of depressed and elevated floor areas.
5. Compatibility of the structure and provisions for building equipment supported on or from structural components shall be verified as to size, dimensions, clearances, accessibility, weights and reaction with the equipment for which the structure has been designed prior to submission of shop drawings and data for each piece of equipment and for structural components. Differences shall be noted on the submittals.
6. Shop drawings shall be prepared for all structural items and submitted for review by the Engineer. Contract Drawings shall not be reproduced and used as shop drawings. All items deviating from the Contract Drawings or from previously submitted shop drawings shall be clouded.
7. The details designated as "Typical Details" apply generally to the Drawings in all areas where conditions are similar to those described in the details.
8. The design and provision of all temporary supports such as guys, braces, falsework, supports and anchors for safety lines, cribbing, or any other temporary elements required for the execution of the contract are not included in these drawings and shall be the responsibility of the Contractor. Temporary supports shall not result in the overstress or damage of the elements to be braced nor any elements used as brace supports.
9. The Contract Structural Drawings and Specifications represent the finished structure, and except where specifically shown, do not indicate the means or methods of construction. The Contractor shall supervise and direct the Work and shall be solely responsible for all construction means, methods, procedures, techniques and sequences.
10. The Engineer shall not have control of, and shall not be responsible for, construction means, methods, techniques, sequences or procedures, for safety precautions and programs in connection with the Work, for the acts or omissions of the Contractor, Subcontractors, or any other person performing any of the Work, or for the failure of any of these persons to carry out the Work in accordance with the Contract Documents.
11. Periodic site observation by field representatives of Texas Department of Transportation is solely for the purpose of determining if the Work is proceeding in accordance with the Structural Contract Documents. This limited site observation is not intended to be a check of the quality or quantity of the Work, but rather a periodic check in an effort to observe against defects and deficiencies in the work of the Contractor.

CODES

1. Building Code: International Building Code, 2006 Edition
2. Structural Concrete: Building Code Requirements for Reinforced Concrete, American Concrete Institute, ACI 318-05.
3. Structural Steel: Steel Construction Manual, American Institute of Steel Construction, Thirteenth Edition.
4. Light Gauge Steel: Specification for the Design of Cold Formed Steel Structural Members, American Iron and Steel Institute, latest edition.

DESIGN LOADS

1. Live Loads

a. Office (not incl. partitions)	50 psf
b. Public areas, corridors, lobbies	100 psf
c. Mechanical Rooms	150 psf
d. Storage (minimum)	125 psf
e. Roof	20 psf
f. Restrooms	50 psf
g. Truck loading	AASHTO HS20

6. Snow Load
   i. Ground Snow Load, Pg — 0 psf
7. Wind Lateral Load on Structural Frame:

   As determined in accordance with IBC-2006 and ASCE 7-05.
8. Dead Loads include the self weight of the structural elements and the following superimposed loads:

Partition at areas with less than 100 psf live load	20 psf
Ceiling and Mechanical at roof	10 psf
Ceiling and Mechanical at floors	5 psf
Roofing and rigid insulation	15 psf
Access flooring	10 psf

9. Seismic Design

   Site Class — C
10. Loading for mechanical rooms and kitchens are based on the weights of equipment and concrete pads as indicated on the contract documents. Any revisions in equipment type, size, or quantity shall be reported to the Architect immediately for verification of the structural design.

BUILDING PAD PREPARATION

1. Select fill material shall consist of non-expansive inert material comprised of clayey sand, clayey gravel, caliche or crushed limestone base material. The clayey gravel materials shall meet the gradation requirements of of Item 247, Type B, Grades 1 through 3 as specified in the 2004 TxDOT Standard Specifications Manual. Crushed limestone material shall meet the requirements of 2004 TxDOT Item 247, Type A, Greade 1 through 3. The select fill materials shall be free of organic materials and debris, and shall not contain stones larger than 2 inches in the maximum dimension.
2. Construction areas shall be stripped of existing structures and foundations, all vegetation, organics, loose topsoil, and other unsuitable surface materials. For the area of the proposed building, including 3 feet beyond, overexcavate the exposed soil subgrade such that a minimum 3 feet of compacted select fill material can be place beneath the slab building foundation.
3. The exposed soil subgrade area shall be proofrolled with a 15 ton roller or loaded dump truck to detect weak areas. Weak areas detected during proofrolling, as well as zones of fill containing organics or debris, shall be removed and replaced with select fill or soils exhibiting similar classification, moisture content, and density as the adjacent in-situ soils. Proofrolling and removal of organics shall be performed under the diret supervision of the geotechnical engineer or his representative.
4. Subsequent to proofrolling, and just prior to placement of remaining fill material, the exposed subgrade shall be evaluated for moisture and density. The subgrade soils shall have moisture contents above the optimum moisture content, and have and in-place dry density of at least 95 percent of the Standard Effort (ASTM D 698) maximum dry density of the in-situ soils. If the moisture or density does not meet the above criteria, the subgrade shall be scarified to a minimum depth of 8 inches, moisture adjusted to above the optimum moisture content, and compacted to at least 95 percent of the Standard Effort (ASTM D 698) maximum dry density.
5. Select fill shall be placed on prepared surfaces in lifts not to exceed 8 inches loose measure, with compacted thickness not to exceed 6 inches. Select fill shall be compacted to at least 95 percent of the Standard Effort (ASTM D 698) maximum dry density above the optimum moisture content.
6. Provide a 10 mil polyolefin vapor retarder. Place vapor retarder in accordance with manufacturer's recommendation on top of structural fill.
7. Building pad preparation information is based on a geotechnical report provided by Terracon Consultants, Inc. dated March 11, 2009, Terracon Project Number 88095012.

DRILLED PIERS

1. Pier design is based on an allowable loading of 2,000 psf in end bearing.
2. Bearing stratum shown on the pier details is Stratum 1 Sandy Clay.
3. Piers not specifically located on the plan shall be located on centerline of column above. Where no column occurs, locate on centerline of wall or beam.
4. Reinforcing cage shall be held securely away from earth at sides and bottom by sets of 3 spacers at a maximum spacing of 8_ft. along the length of the cage and 1'-0" from the bottom.
5. Pier reinforcing and concrete shall be placed immediately after drilling operations are complete; in no case shall a pier be drilled that cannot be poured by the end of the workday.
6. See plans for pier sizes, reinforcing and depth.
7. The contractor shall verify depths of piers before pier steel is cut. Pier steel may be delivered to the jobsite in standard lengths and cut as required. Provide 64 bar diameter laps in all vertical pier reinforcing.
8. Reinforcing steel shop drawings shall include placing drawings for templates to set dowels in piers.
9. Top of pier shall be of the specified diameter. Form top of pier if required to maintain the specified diameter. Any concrete extending beyond the specified diameter shall be removed.
10. The contractor shall make and maintain accurate records of the drilled pier depths, bearing stratum, depth of penetration into bearing stratum, diameter and location (including off center eccentricities), and shall submit this information to the Engineer.

CAST IN PLACE CONCRETE

1. Cast in place concrete shall meet the following requirements:

Class	28 Day Strength	Aggregate Type	Size	Slump	Use
A	3000 psi	C	1"	3"-5"	Slab on Grade, Drilled Piers

2. Fly ash shall not be used in architecturally exposed concrete.
3. Provide 5 percent plus or minus 1 1/2 percent of entrained air in concrete permanently exposed to the weather and elsewhere at the contractor's option.
4. Horizontal construction joints in concrete pours shall be permitted only where indicated on the drawings. All vertical construction joints shall be made in the center of spans in accordance with the typical details. Contractor shall submit proposed locations for construction joints not shown on drawings for review by the Architect and Structural Engineer. Additional construction joints may require additional reinforcing as specified by the Engineer which shall be provided by the contractor at no additional cost to the owner.
5. Embedded conduits, pipes, and sleeves shall meet the requirements of ACI 318-02, Section 6.3, including the following:
   a. Conduits and pipes embedded within a slab, wall, or beam (other than those passing through) shall not be larger in outside dimension than 1/3 the overall thickness of the slab, wall or beam in which they are embedded.
   b. Conduits, pipes and sleeves shall not be spaced closer than three diameters or widths on center.
   c. Conduits, pipes and sleeves shall be fabricated from uncoated or galvanized iron or steel not thinner than standard Schedule 40 steel pipe.
6. Concrete pours shall not exceed 5000 square feet or 100 linear feet on each side without prior approval by the Architect for each pour.

STRUCTURAL ABBREVIATIONS

ADDITIONAL	ADDN'L
ADJACENT	ADJ.
AGGREGATE	AGGR.
ALTERNATE	ALT.
ANCHOR BOLT	A.B.
AND &	
ANGLE	L
APPROVED	APPD.
APPROXIMATE	APPROX.
ARCHITECT	ARCH.
ARCHITECTURAL	ARCH'L
AT @	
AIR CONDITIONER	A/C
AIR HANDLING UNIT	AHU
BACK FACE	B.F.
BACK TO BACK	B. TO B.
BASEMENT	BSMT.
BEAM	BM.
BEARING	BRG.
BELOW FINISH FLOOR	B.F.F.
BETWEEN	BTWN.
BEVEL (ED)	BEV('D)
BLOCK	BLK.
BLOCKING	BLKG.
BLOCK-OUT	B.O.
BOTTOM	BOT.
BRACKET	BRKT.
BRICKLEDGE	BR.L.
BRIDGING	BRDG.
BUILDING	BLDG.
BUILDING LINE	B.L.
CAST-IN-PLACE	C.I.P.
CEILING	CLG.
CENTER LINE	C. LOR
CENTER OF GRAVITY	C.G.
CLEAR OR CLEARANCE	CLR.
COLUMN	COL.
COMPRESSION	C OR COMP.
CONCRETE	CONC.
CONCRETE MASONRY UNIT	CMU
CONNECTIONS	CONN(S)CONTINUOUS CONT.
CONTRACTOR	CONTR.
CONTROL JOINT	CONTR.JT.
CONSTRUCTION	CONST.
CONSTRUCTION JOINT	C.J.
CORNER	COR.
COVER PLATE	COV. PL.
DETAIL	DET.
DEAD LOAD	D.L.
DEFORMED BAR ANCHOR	D.B.A.
DIAGONAL	DIAG.
DIAMETER	DIA.
DIMENSION(S)	DIM(S)
DOVETAIL	DVTL.
DOWNSPOUT	DS.
DRAWING(S)	DWG(S).
DOUBLE	DBL.
DOWEL(S)	DWL(S)
EACH	EA.
EACH FACE	E.F.
EACH WAY	E.W.
ELECTRICAL	ELEC.
ELEVATION	EL.
ELEVATOR	ELEV.
ENGINEER	ENGR.
ENTRANCE	ENT.
EQUAL	EQ.
EQUIPMENT	EQUIP.
EXPANSION	EXP.
EXPANSION JOINT	E.J.
EXISTING	EXIST
EXTERIOR	EXT.
EXTRA STRONG	X-STR
FACE TO FACE	F. TO F.
FABRICATOR	FABR.
FAR SIDE	F.S.
FINISH(ED)	FIN('D)
FINISHED FLOOR	FIN.FL.
FIREPROOF(ING)	FP.
FLANGE	FLG.
FLOOR	FL.
FLOOR DRAIN	F.D.
FOUNDATION	FDN.
FOOT(OR)FEET	FT.
GAGE OR GAUGE	GA.
GALVANIZED	GALV.
GR.	
GRADE BEAM	GR.BM.
HEADED STUDS	H.S.
HEIGHT	HT.
HIGH POINT	H.P.
HORIZONTAL	HORIZ.
HOOK	HK.
INCHIN.	
INFORMATION	INFO.
INSIDE DIAMETER	I.D.
INSIDE FACE	I.F.
INTERIOR	INT.
INTERMEDIATE	INTERM.
JOINT	JT.
JOIST(S)	JST(S)
KIPS(1000 LBS)	K
KIP PER LINEAR FOOT	KLF
KIP PER SQUARE FOOT	KSF
LIGHTWEIGHT CONCRETE	LWT.CONC.
LIVE LOAD	L.L.
LONGITUDINAL	LONG.
LONG LEG HORIZONTAL	LLH.
LONG LEG VERTICAL	LLV.
LOW POINT	L.P.
MANUFACTURE(R)	MFR.
MASONRY	MAS.
MATERIAL	MAT.
MAXIMUM	MAX.
MECHANICAL	MECH.
MEZZANINE	MEZZ.
MIDDLE	MID.
MINIMUM	MIN.
MISCELLANEOUS	MISC.
MOMENT	M
MOMENT CONNECTION(S)	M.C.
NEAR FACE	N.F.
NOMINAL	NOM.
NON-SHRINK	N.S.
NOT IN CONTRACT	N.I.C.
NOT TO SCALE	N.T.S.
NUMBER	NO. OR #
ON CENTER	O.C.
OPENING(S)	OPNG(S)
OPPOSITE	OPP.
OPPOSITE HAND	O.H.
OUTSIDE FACE	O.F.
OUTSIDE DIAMATER	O.D.
OUTSTANDING	OSTG.
PAN P	
PARALLEL	PAR.
PERPENDICULAR	PERP.
PIECE	PC.
PLATE	PL.
POINT	PT.
POUNDS PER SQUARE FOOT	PSF
POUNDS PER SQUARE INCH	PSI
PRECAST CONCRETE	P/C
PER-ENGINEERED	PE
PREFABRICATED	PREFAB.
PRELIMINARY	PRELIM.
PROJECTION	PROJ.
RADIUS	R
REINFORCED CONCRETE PIPE	RCP
REINFORCE(ING)(ED)(MENT)	REINF.
REMAINDER	REM.
REQUIRE(ED)	REQ.
RETENTION SYSYTEM	RET.SYS.
REQUIRED	REQ'D.
RISER	RIS.
ROOF	RF.
ROOF DAIN	R.D.
ROOM	RM.
ROUND	RND.
SCHEDULE(D)	SCHED.
SECTION	SECT.
SHEAR	V
SHEET	SHT.
SIDEWALK	SW.
SIMILAR	SIM.
SPACE	SP.
SPECIFICATIONS(S)	SPEC(S)
SPECIFIED	SPEC'D
SQUARE FOOT	S.F.
STAINLESS STEEL	S.S.
STANDARD	STD.
STEEL	STL.
STIFFENER	STIFF
STRAIGHT	STR.
STIRRUPS	STIR
STRUCTURE	STRUCT.
STRUCTURAL	STRUCT'L
SUBCONTRACTOR	SUBCONTR.
SUPPORT(S)	SUPT(S)
TEMPERATURE	TEMP.
TENSION	T
TERRAZZO	TERR.
THICK	THK.
TONGUE AND GROOVE	T&G
TOP AND BOTTOM	T&B
TOP OF BEAM	T.O.B.
TOP OF FOOTING	T.O.F.
TOP OF JOIST	T.O.J.
TOP OF PIER	T.O.P.
TOP OF PIERCAP	T.O.P.C.
TOP OF RETAINING WALL	T.R.W.
TOP OF STEEL	T.O.S.
TOP OF STRUCTURAL CONCRETE	T.O.S.C.
TOP OF WALL	T.O.W.
TREAD	TR.
TYPICAL	TYP.
UNLESS NOTED OTHERWISE	U.N.O.
VERTICAL	VERT.
WATERSTOP	WS.
WATERPROOFING	WPFG.
WELDED WIRE MESH	W.W.M.
WIND BRACE	WB
WIND LOAD	W.L.
WINDOW	WDW.
WITHW/	
WITHOUT	W/O
WORK POINT	W.P.
WOOD	WD.
JOIST(S)	JST(S)

Texas Department of Transportation
125 E. 11th Street
Austin, Texas 78701-2483
(512) 416-3040
Copyright © 2005 Texas Department of Transportation

THIS DOCUMENT IS RELEASED FOR THE PURPOSE OF INFORMATION ONLY
NOT FOR REGULATORY APPROVAL, PERMITTING, OR CONSTRUCTION.

EDCOUCH MAINTENANCE FACILITY
HIDALGO COUNTY, EDCOUCH TEXAS
PHARR DISTRICT

Revisions

Drawn by: BH
Project No.
Date 05-26-2009
Sheet No.
S1.1
of X sheets

STRUCTURAL NOTES & ABBREVIATIONS

NOTE: THIS DRAWING WAS CREATED FOR PRODUCTION ON 22" x 34" SHEET SIZE. DO NOT SCALE PRINTS.

STRUCTURAL NOTES

CONCRETE REINFORCING

1. Reinforcing steel shall be deformed new billet steel bars in accordance with ASTM A615 Grade 60.
2. Detailing of reinforcing steel shall conform to the American Concrete Institute Detailing Manual.
3. All hooks and bends in reinforcing bars shall conform to ACI detailing standards unless shown otherwise.
4. In unscheduled beams, slabs, and columns detail reinforcing as follows:
    a. Lap top reinforcing bars at mid span.
    b. Lap bottom reinforcing bars at the supports.
    c. Lap vertical bars in columns only at floor lines, unless noted otherwise.
    d. Lap reinforcing bars 38 bar diameters minimum, unless noted otherwise.
    e. Provide standard hooks in top bars at cantilever and discontinuous ends of beams and slabs.
    f. Provide corner bars for all horizontal bars at the inside and outside faces of intersecting beams. Corner bars are not required if horizontal bars are hooked.
5. Welding of reinforcing steel will not be permitted.
6. Heat shall not be used in the fabrication or installation of reinforcement.
7. Reinforcing steel clear cover shall be as follows:
    a. Grade beams — 1 1/2" top, 3" bottom, 2" side (formed), 3" side (placed against earth)

PRE_ENGINEERED METAL BUILDINGS

1. All Structural Steel used for Pre–Engineered Building Components shall be designed, fabricated, and erected in conformance with the latest standards of the AISC. The design and fabrication of Light Gage Steel members shall comply with the AISI, latest edition.
2. The design for all Pre–Engineered Building members and components (including anchor bolt sizes, lengths and embedment) shall be the responsibility of the Pre–Engineered Building manufacturer. The design shall be carried out under the direction of a Professional Engineer registered in the state of Texas.
3. The design of all Pre–Engineered Building Components shall be based on the loads indicated in the "Design Loads" section of the Structural Notes. Deflections of the Pre–Engineered Building Structure under loading shall not exceed the following:

a. Rigid Frames and Columns – Drift	L/360 Lateral
b. Wall Girts and Eave Struts	L/360 Lateral
c. Rigid Frames and Roof Purlins Drop in Ceiling or No Ceiling	L/240 Vertical
d. Plaster or Gypsum Board Ceiling	L/360 Vertical

15. Bases of columns shall be designed as pinned supports.
16. All building components shall be compatible with the contract documents. Any requests for modifications shall be submitted to the Architect during the bidding process.
17. Field welded connections for light gauge members shall not be permitted without specific written approval of the Architect.
18. Lateral stability of the building frame shall be provided in the structural framing. Walls and other building components shall not be used to resist lateral loads unless noted otherwise.
19. Shop drawings shall be prepared for all structural items and submitted for review. Contract Drawings shall not be reproduced and used as shop drawings. Any items deviating from the Contract Drawings or from previously submitted shop drawings shall be so noted. Shop drawings shall be sealed and signed by a Professional Engineer registered in the State of Texas.

METAL ROOF DECK

1. Steel Roof Deck shall be 1–1/2" inch deep, type "F", 20 gauge deck. Minimum section modulus shall be 0.148 inches cubed per linear foot of deck.
2. Roof deck shall be galvanized.
3. Sheet steel for galvanized roof deck and accessories shall conform to ASTM A653–94, Structural Quality, with a minimum yield strength of 33 ksi. Galvanizing shall conform to ASTM A924–94 with a minimum coating of G90 as defined in A653–94.
4. Roof deck shall be continuous over four or more supports.
5. Place deck panels on structural supports and adjust to final position with ends lapped 2 inches over structural supports. Provide minimum end bearing of 2 inches.
6. Roof deck connections shall conform to the requirements of Factory Mutual Class 1–90 (Data Sheet 1–28 dated September 2005, and Data Sheet 1–29 dated May 2006). For connection purposes, the width of the roof corners and perimeter, including ridges, is defined as the smaller of:
    a. 0.1 times the building lesser plan dimension.
    b. 0.4 times the eave height
    c. subject to a minimum width of 4 feet.
7. Roof deck connections shall be as follows:
    d. At all supports in the field of the roof: 3/8" puddle weld at each side lap and at intermediate ribs at 12" on center.
    e. At all supports in the roof corners and perimeter: 3/8" puddle weld at 6" on center.
    f. At side laps: 2–#10 Tek self–drilling screws equally spaced at 3 equal spaces between supports, 18" o.c. maximum.
8. Self–drilling screws shall be selected by the contractor for the combinations of deck gauge and deck support member thickness. Submit proposed fasteners with complete manufacturer's information, including diaphragm shear values for Engineer's review.
9. Mechanical, electrical & plumbing systems shall not be supported by the metal roof deck.

Texas Department of Transportation

THIS DOCUMENT IS RELEASED FOR THE PURPOSE OF INFORMATION ONLY
NOT FOR REGULATORY APPROVAL, PERMITTING, OR CONSTRUCTION.

EDCOUCH MAINTENANCE FACILITY
HIDALGO COUNTY, EDCOUCH TEXAS
PHARR DISTRICT

Revisions
Drawn by: BH
Project No.
Date 05-26-2009
Sheet No. S1.2
of X sheets

STRUCTURAL NOTES

NOTE: THIS DRAWING WAS CREATED FOR PRODUCTION ON 22" x 34" SHEET SIZE. DO NOT SCALE PRINTS.

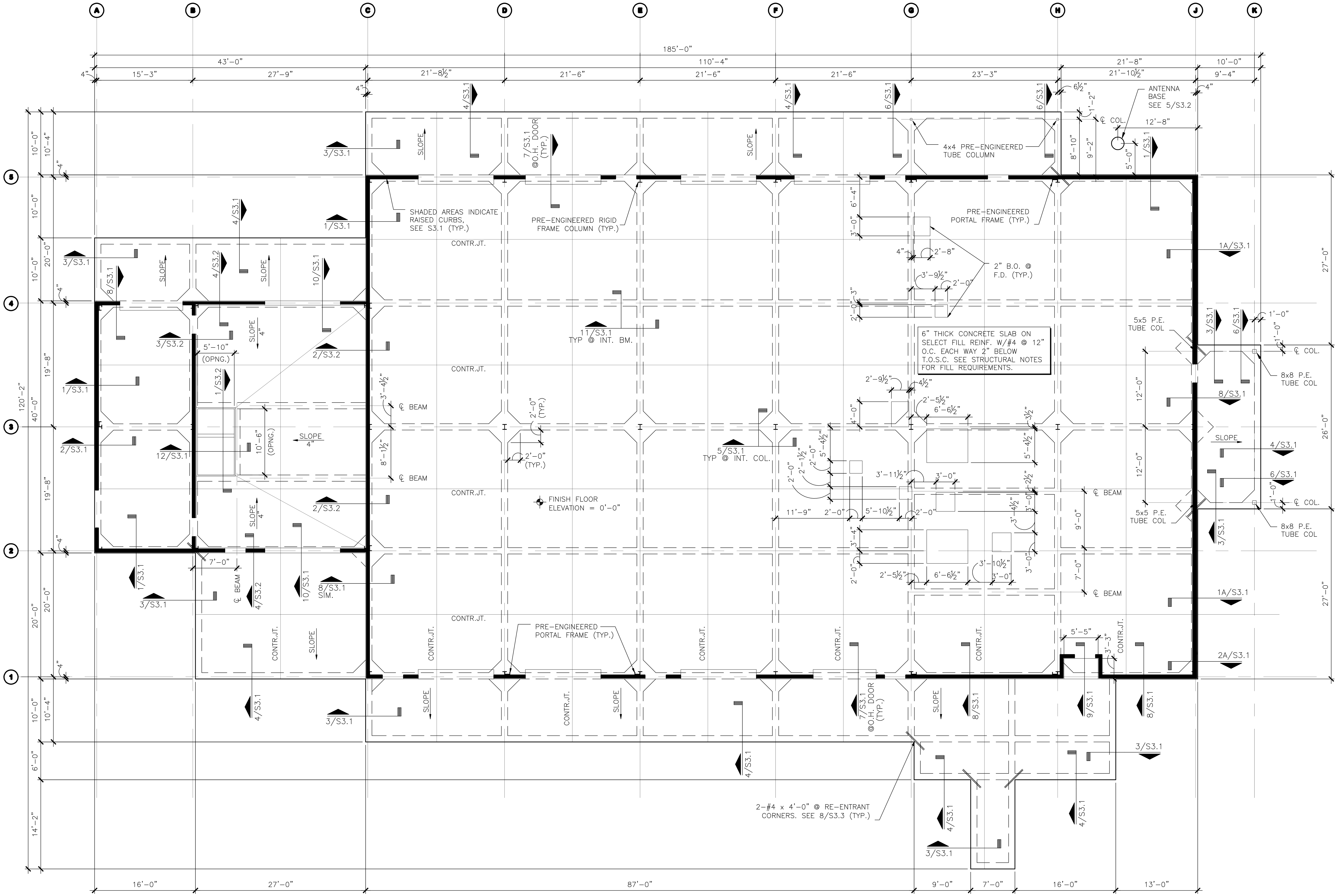

1 FOUNDATION PLAN

SCALE: 1/8" = 1'-0"

PLAN NORTH

PLAN NOTES:

1. REFERENCE T.O.C. ELEVATION OF 0'-0" FINISHED FLOOR ELEVATION.
2. VERIFY & COORDINATE SLAB PENETRATIONS W/ ARCH'L & MEP DRAWINGS.
3. COORDINATE LOCATION & DIMENSION OF SLAB RECESSES WITH ARCHITECTURAL DRAWING.
4. REFER TO SHEET S3.3 FOR TYPICAL FOUNDATION DETAILS.
5. SEE 8/S3.3 FOR TYPICAL COLUMN BLOCKOUT DETAIL. CURBS AT COLUMNS SHALL BE PLACED AFTER COLUMNS ARE ERECTED AND GROUTED. SEE DETAIL 2/S3.1.
6. CONCRETE FOUNDATION BEYOND BUILDING LINES REPRESENTS SLOPED CONCRETE APRON (SEE ARCH'L, MIN SLOPE 1/8" PER FOOT), TO BE PLACED MONOLITHICALLY WITH BUILDING SLAB. SEE DETAILS.

CADFILE: T:\MNTFMD02\FTWCSC\4704-00-537\02-77-47040537\Acad\prototypical pdfs\edcouch\Acad\Struct\54_S2_1.dwg Plotted: Fri, Aug. 07, 2009 @ 11:43 AM By: MBAZAN

Texas Department of Transportation
125 E. 11th Street
Austin, Texas 78701-2483
(512) 416-2946

Copyright © 2005 Texas Department of Transportation

THIS DOCUMENT IS RELEASED FOR THE PURPOSE OF INFORMATION ONLY
NOT FOR REGULATORY APPROVAL, PERMITTING, OR CONSTRUCTION.

EDCOUCH MAINTENANCE FACILITY
HIDALGO COUNTY, EDCOUCH TEXAS
PHARR DISTRICT

Revisions

Drawn by:
BH

Project No.

Date
05-26-2009

Sheet No.
S2.1
of X sheets

FOUNDATION PLAN

NOTE: THIS DRAWING WAS CREATED FOR PRODUCTION ON 22" x 34" SHEET SIZE. DO NOT SCALE PRINTS.

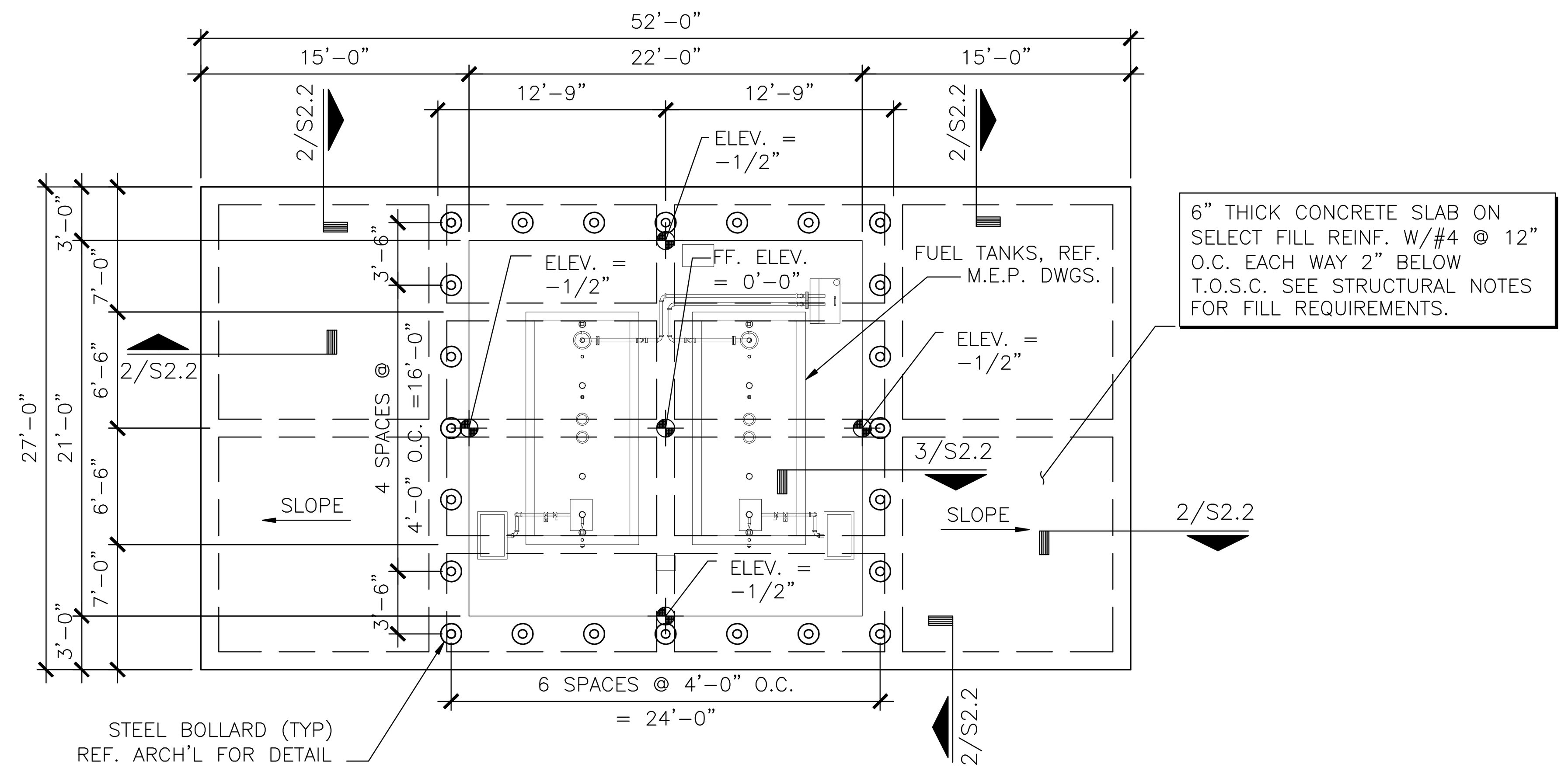

1 FOUNDATION PLAN - FUEL ISLAND

SCALE: 1/8" = 1'-0"

PLAN NOTES:

1. REFERENCE T.O.C. ELEVATION OF 0'-0" FINISHED FLOOR ELEVATION.
2. REFER TO ARCHITECTURAL FOR LOCATION OF FUEL ISLAND.
3. VERIFY & COORDINATE SLAB PENETRATIONS W/ ARCH'L & MEP DRAWINGS.
4. COORDINATE LOCATION & DIMENSION OF SLAB RECESSES WITH ARCHITECTURAL DRAWING.
5. REFER TO SHEET S3.3 FOR TYPICAL FOUNDATION DETAILS.
6. FUEL STATION CONCRETE SLAB SIZE IS SPECIFIC TO SPECIFIED TANKS. DIMENSIONS MAY VARY PER INSTALLED TANKS.
7. CONTRACTOR IS RESPONSIBLE FOR ADJUSTING SLAB DIMENSIONS TO MEET THE REQUIRED CLEARANCES BETWEEN TANKS (3'-0" MIN.) AND EDGE OF TANK TO CENTER OF BOLLARDS (5'-0" MAX.).
8. MAINTAIN A MINIMUM OF 2'-6" ON ALL SIDES FROM EDGE OF TANKS TO EDGE OF SLAB.

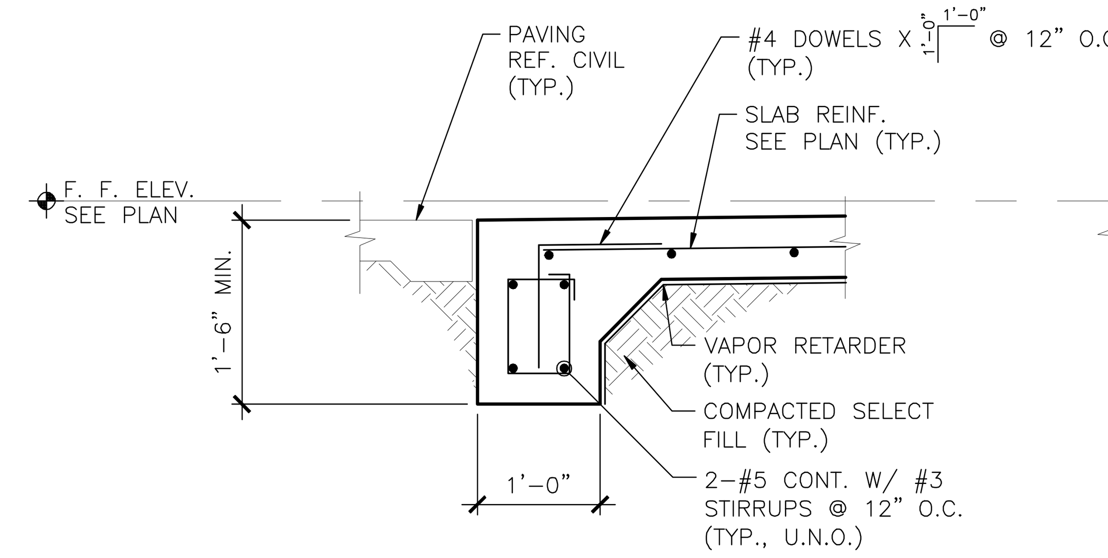

2 FOUNDATION DETAIL

SCALE: 3/4" = 1'-0"

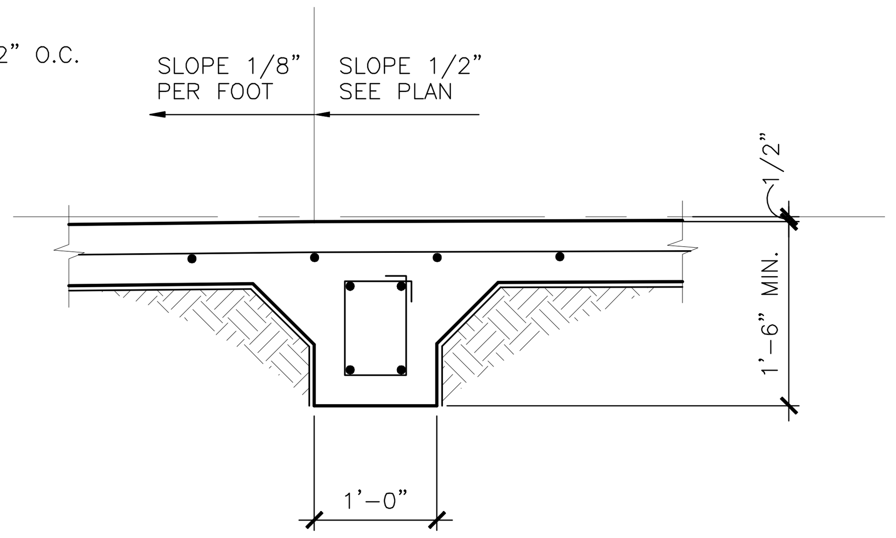

3 FOUNDATION DETAIL

SCALE: 3/4" = 1'-0"

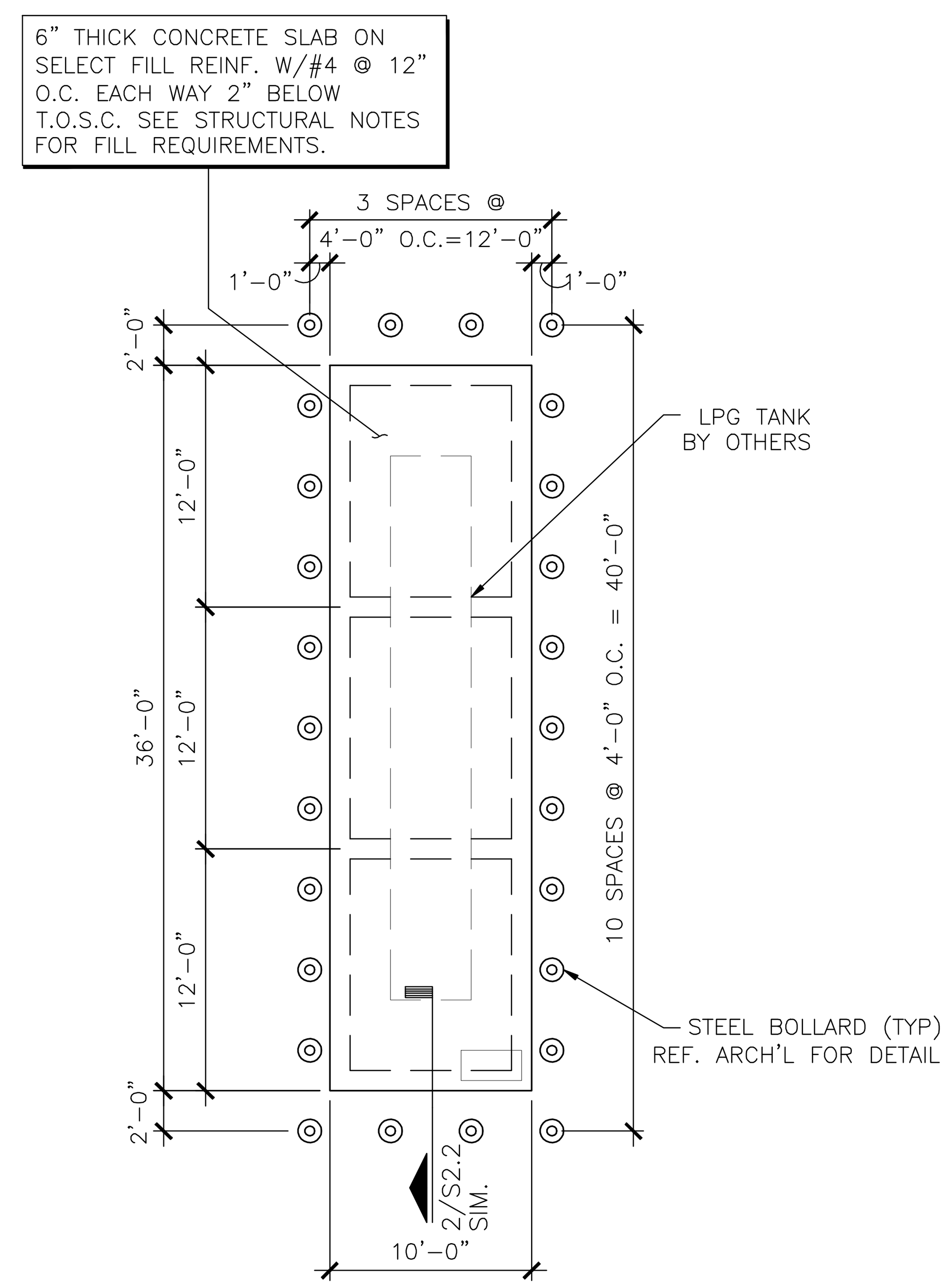

4 FOUNDATION PLAN - LPG TANK PAD

SCALE: 1/8" = 1'-0"

PLAN NOTES:

1. REFERENCE T.O.C. ELEVATION OF 0'-0" FINISHED FLOOR ELEVATION.
2. REFER TO ARCHITECTURAL FOR LOCATION OF LPG TANK.
3. VERIFY & COORDINATE SLAB PENETRATIONS W/ ARCH'L & MEP DRAWINGS.
4. COORDINATE LOCATION & DIMENSION OF SLAB RECESSES WITH ARCHITECTURAL DRAWING.
5. REFER TO SHEET S3.3 FOR TYPICAL FOUNDATION DETAILS.

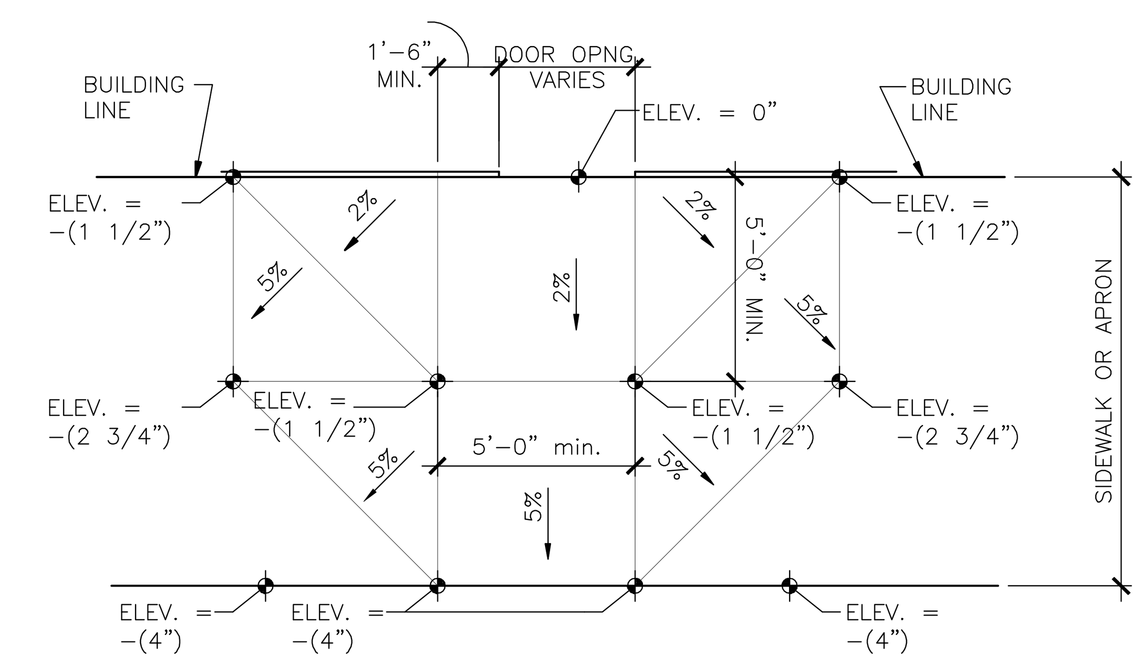

5 PLAN DETAIL @ EXTERIOR DOOR (TYPICAL.)

SCALE: 1/4" = 1'-0"

PLAN NOTES:

1. REFERENCE T.O.C. ELEVATION OF 0'-0" FINISHED FLOOR ELEVATION.
2. REFER TO FOUNDATION PLAN (S2.1) AND ARCH'L FOR EXTERIOR DOOR LOCATIONS.
3. COORDINATE LOCATION & DIMENSION OF SLAB RECESSES WITH ARCHITECTURAL DRAWING.
4. REFER TO SHEET S3.3 FOR TYPICAL FOUNDATION DETAILS.

FUEL ISLAND: FOUNDATION PLAN & DETAILS

NOTE: THIS DRAWING WAS CREATED FOR PRODUCTION ON 22" x 34" SHEET SIZE. DO NOT SCALE PRINTS.

Texas Department of Transportation
125 E. 11th Street
Austin, Texas 78701-2483
(512) 416-2840

Copyright © 2005 Texas Department of Transportation

THIS DOCUMENT IS RELEASED FOR THE PURPOSE OF INFORMATION ONLY
NOT FOR REGULATORY APPROVAL, PERMITTING, OR CONSTRUCTION.

EDCOUCH
MAINTENANCE FACILITY
HIDALGO COUNTY, EDCOUCH TEXAS
PHARR DISTRICT

Revisions

Drawn by: BH
Project No.
Date 05-26-2009
Sheet No. S2.2
of X sheets

CADFILE: T:\MNTFMD02FTWCSC\704-00-537\02-77-470400537\Acad\prototypical pdfs\edcouch\Acad\Struct\S4_S2_2.dwg Plotted: Fri, Aug. 07, 2009 @ 11:43 AM By: MBAZAN

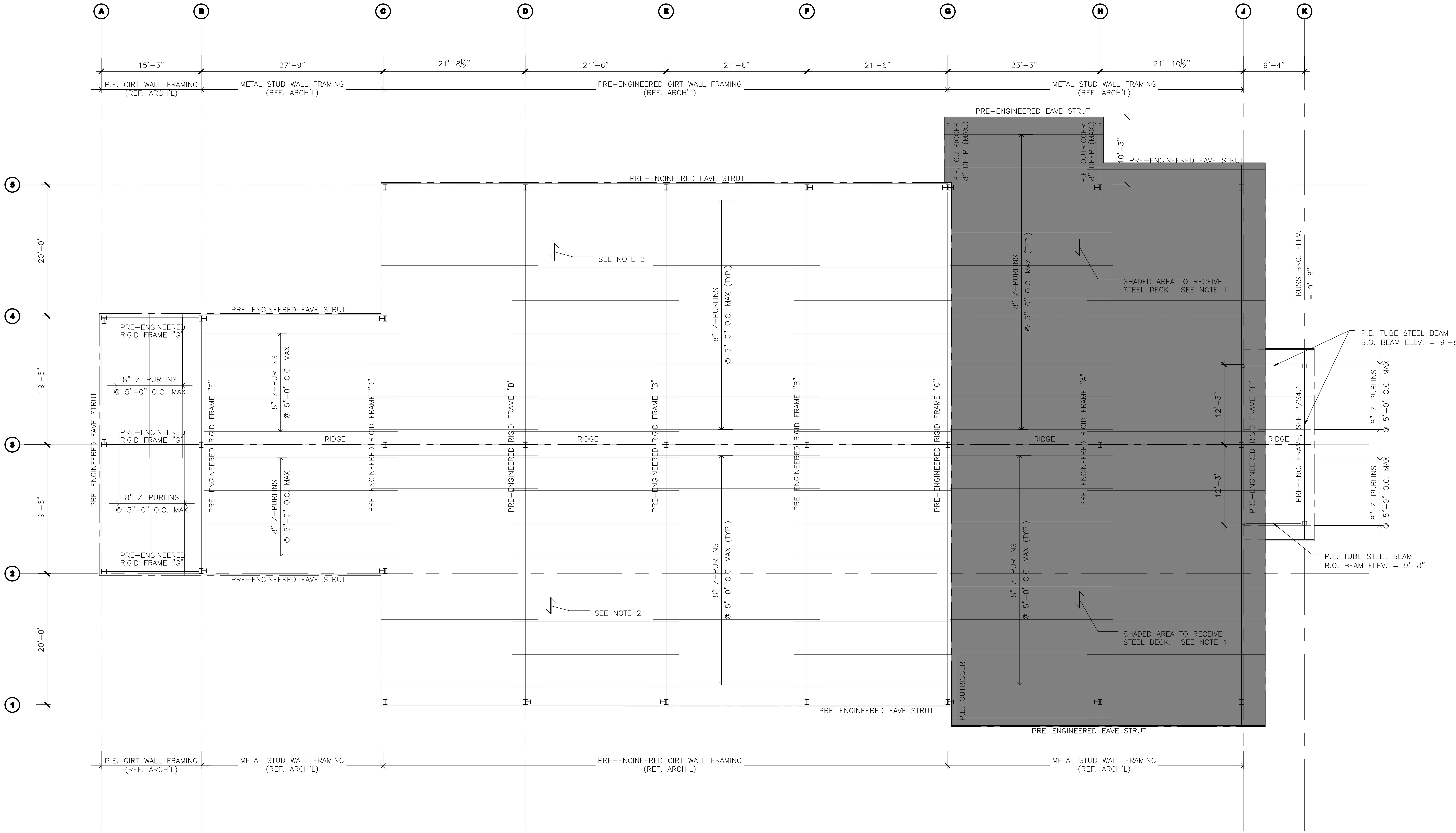

1 ROOF FRAMING PLAN

SCALE: 1/8" = 1'-0"

PLAN NORTH

PLAN NOTES:

1. ROOF DECK SHALL BE 1 1/2" 20 GAUGE TYPE "F" STEEL DECK. SEE STRUCTURAL NOTES.
2. ROOF DECK SHALL BE STANDING SEAM METAL ROOF. SEE ARCH'L FOR DETAILS.
3. REFER TO 1/S4.1 FOR PRE-ENGINEERED RIGID FRAME ELEVATIONS.
4. REFER TO 2/S4.1 FOR PRE-ENGINEERED TUBE STEEL TRUSS "A" ELEVATION.

Texas Department of Transportation
125 E. 11th Street
Austin, Texas 78701-2483
(512) 416-2940

Copyright © 2005 Texas Department of Transportation

THIS DOCUMENT IS RELEASED FOR THE PURPOSE OF INFORMATION ONLY
NOT FOR REGULATORY APPROVAL, PERMITTING, OR CONSTRUCTION.

EDCOUCH MAINTENANCE FACILITY
HIDALGO COUNTY, EDCOUCH TEXAS
PHARR DISTRICT

Revisions

Drawn by: BH
Project No.

Date 05-26-2009
Sheet No.
S2.3
of X sheets

ROOF FRAMING PLAN

NOTE: THIS DRAWING WAS CREATED FOR PRODUCTION ON 22" x 34" SHEET SIZE. DO NOT SCALE PRINTS.

CADFILE: T:\M\NTF\MD02FTWCSC\704-00-557\02-77-470400557\Acad\prototypical pdf\edcouch\Acad\Struct\684_S2_3.dwg Plotted: Fri. Aug. 07, 2009 @ 11:44 AM By: MBAZAN

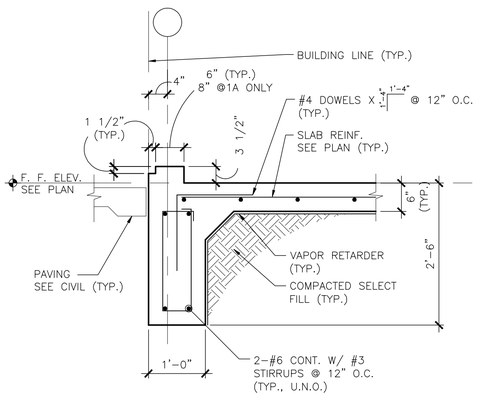

1 FOUNDATION SECTION
1A
SCALE: 3/4" = 1'-0"

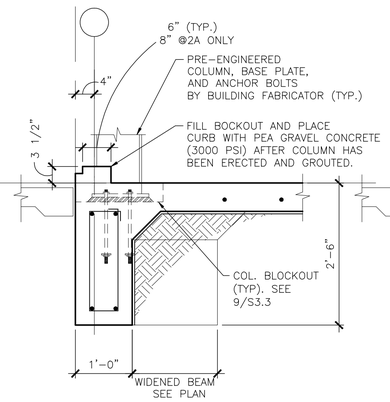

2 FOUNDATION SECTION
2A
SCALE: 3/4" = 1'-0"

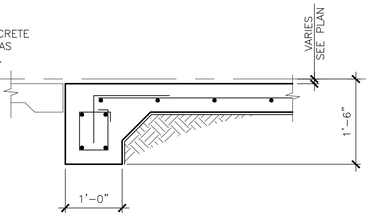

3 FOUNDATION SECTION
SCALE: 3/4" = 1'-0"

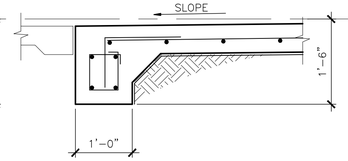

4 FOUNDATION SECTION
SCALE: 3/4" = 1'-0"

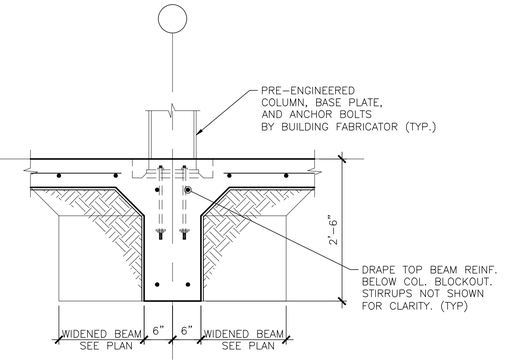

5 FOUNDATION SECTION
SCALE: 3/4" = 1'-0"

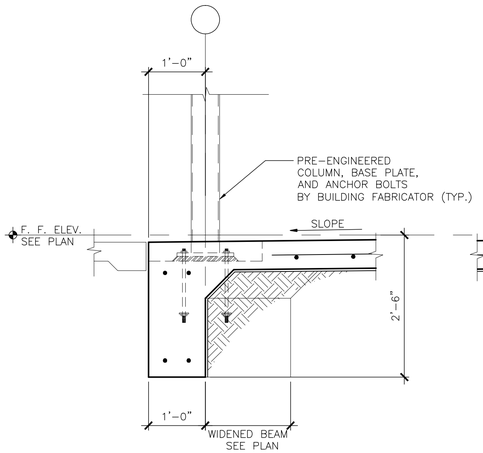

6 FOUNDATION SECTION
SCALE: 3/4" = 1'-0"

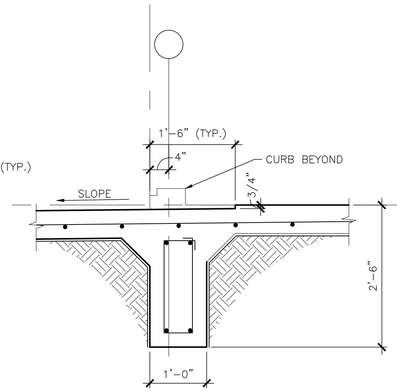

7 FOUNDATION SECTION
SCALE: 3/4" = 1'-0"

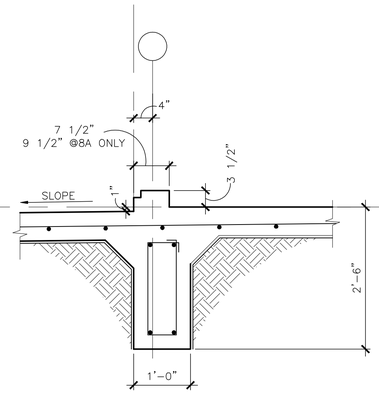

8 FOUNDATION SECTION
SCALE: 3/4" = 1'-0"

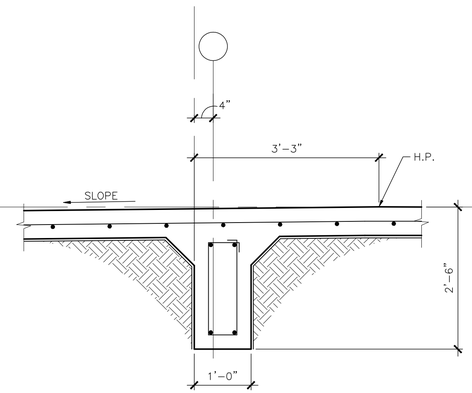

9 FOUNDATION SECTION
SCALE: 3/4" = 1'-0"

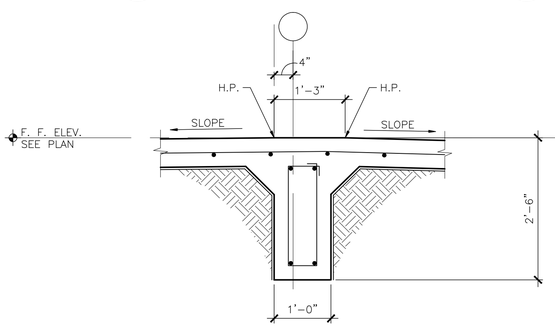

10 FOUNDATION SECTION
SCALE: 3/4" = 1'-0"

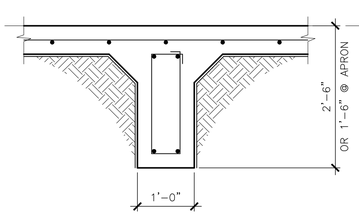

11 FOUNDATION SECTION
SCALE: 3/4" = 1'-0"

8A

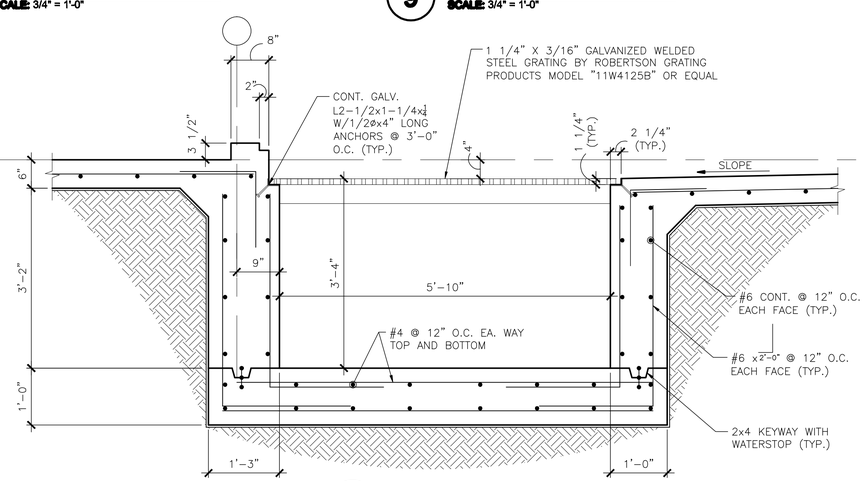

12 FOUNDATION SECTION
SCALE: 3/4" = 1'-0"

FOUNDATION DETAILS

NOTE: THIS DRAWING WAS CREATED FOR PRODUCTION ON 22" x 34" SHEET SIZE. DO NOT SCALE PRINTS.

CADFILE: T:\MAINTRA\DOZFTWO\BRC-4704-00-057\02-77-4704005577\Accdfpmt\dgn\sd pdfwindows\Accdfpmt\dgn\sd 8\mnt\894_S3_1.dwg Pltted: Fri, Aug. 07, 2009 @ 11:45 AM By: MBAZAN

Texas Department of Transportation
125 E. 11th Street
Austin, Texas 78701-2483
(512) 416-2000

Copyright © 2005 Texas Department of Transportation

THIS DOCUMENT IS RELEASED FOR THE PURPOSE OF
INFORMATION ONLY
NOT FOR REGULATORY
APPROVAL, PERMITTING,
OR CONSTRUCTION.

EDCOUCH MAINTENANCE FACILITY
HIDALGO COUNTY, EDCOUCH TEXAS
PHARR DISTRICT

Revisions

Drawn by: BH
Project No.
Date 05-26-2009
Sheet No.

S3.1
of X sheets

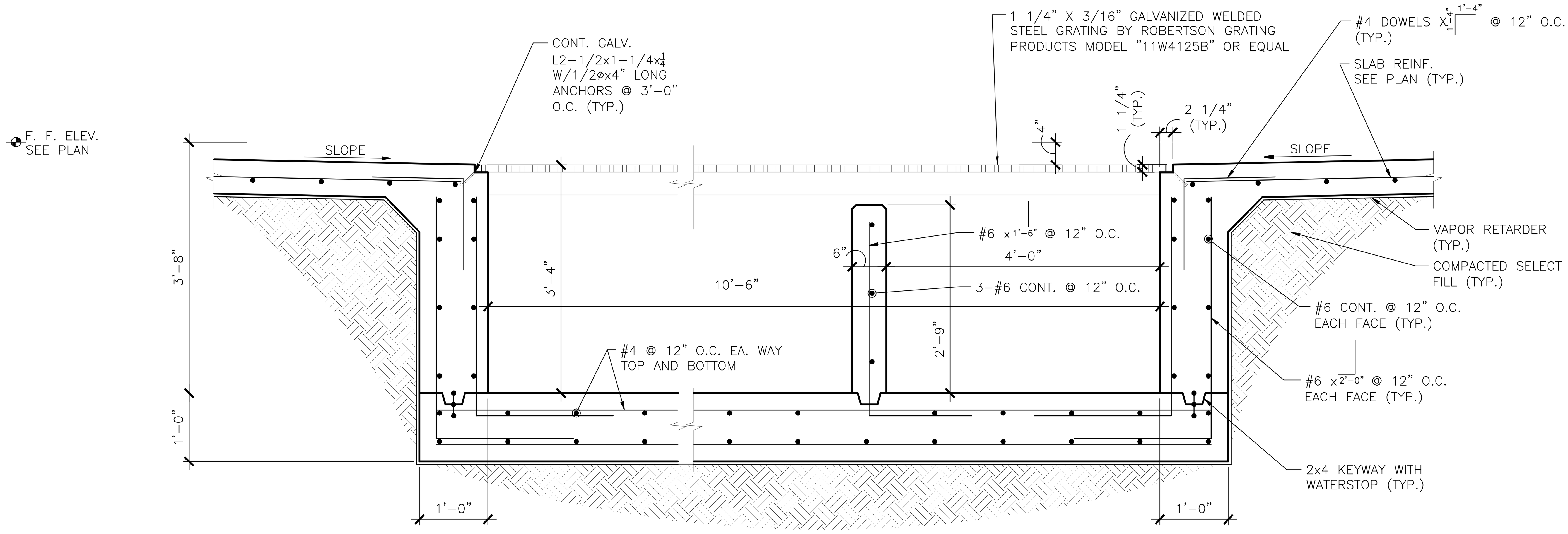

1 FOUNDATION SECTION
SCALE: 3/4" = 1'-0"

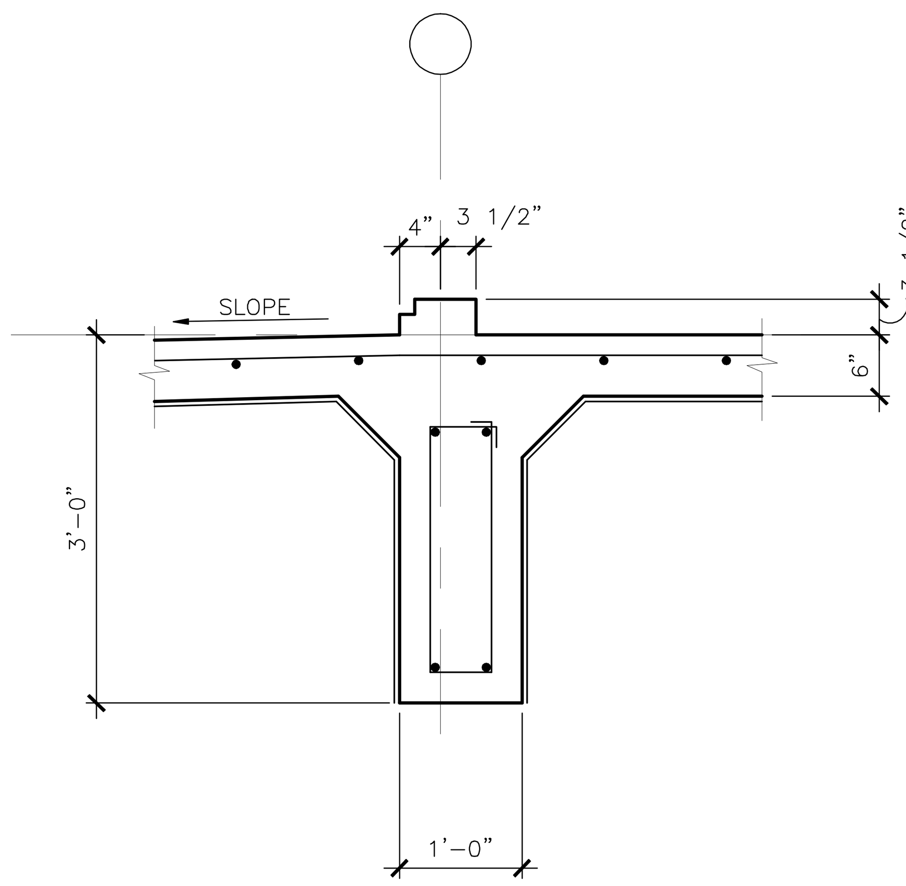

2 FOUNDATION SECTION
SCALE: 3/4" = 1'-0"

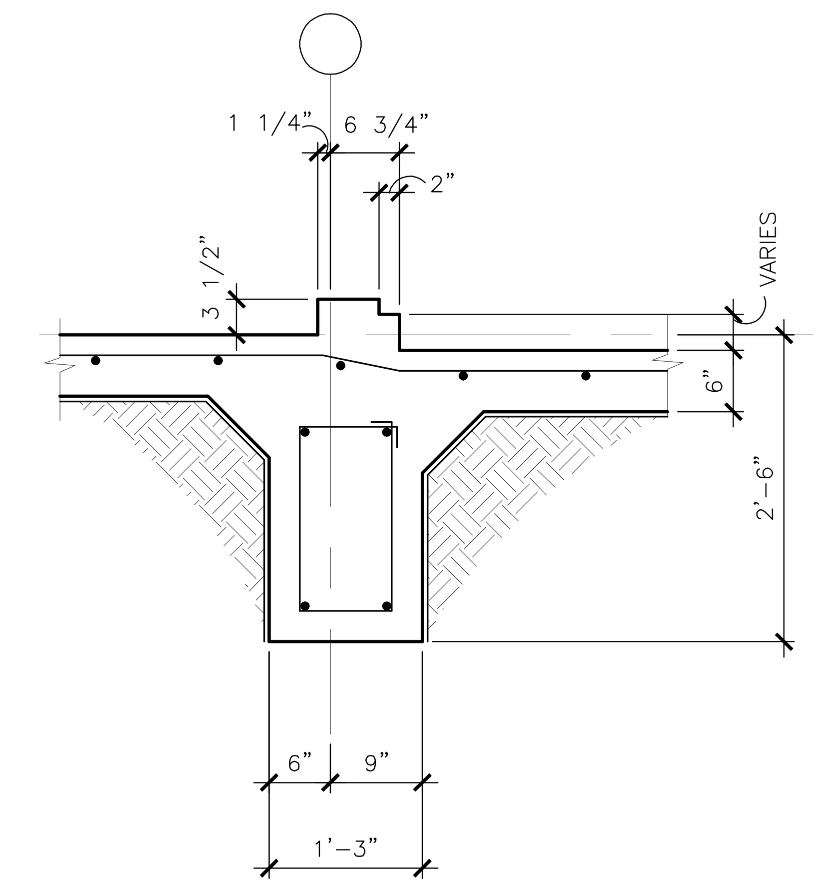

3 FOUNDATION SECTION
SCALE: 3/4" = 1'-0"

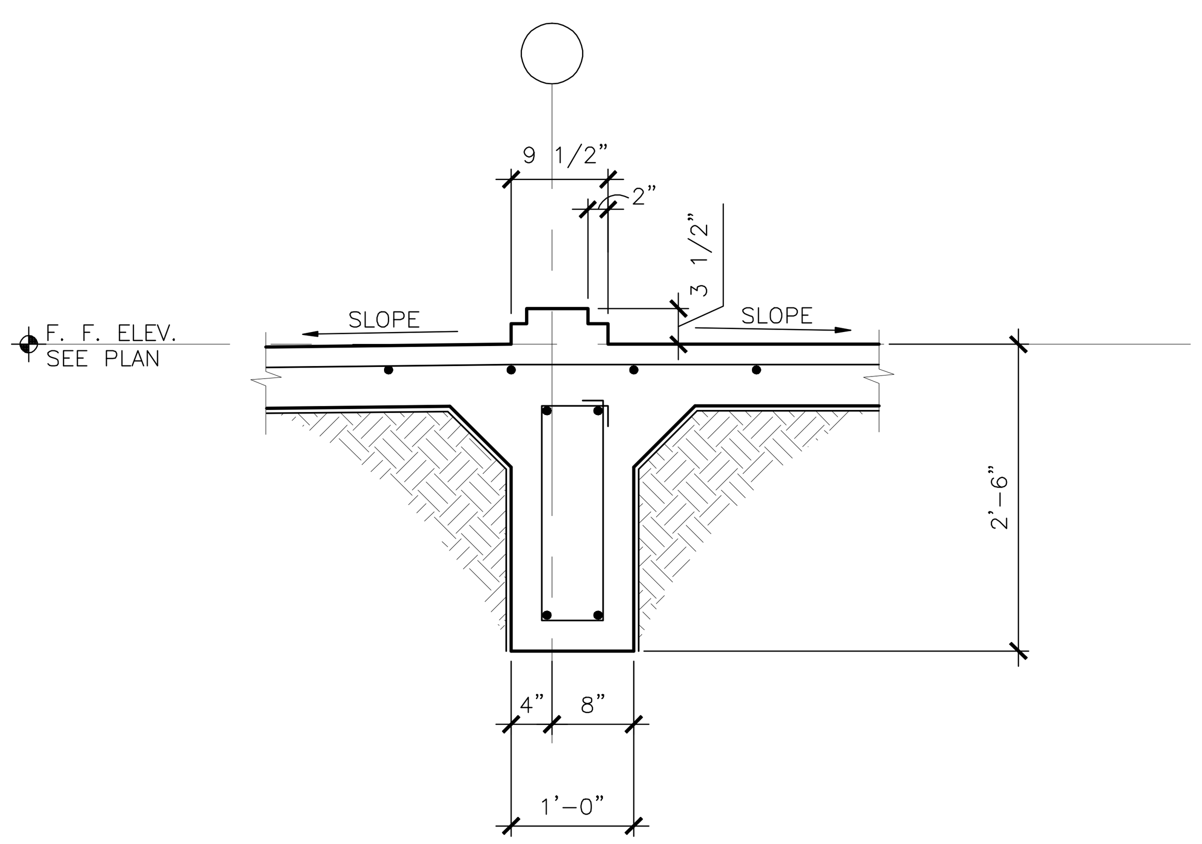

4 FOUNDATION SECTION
SCALE: 3/4" = 1'-0"

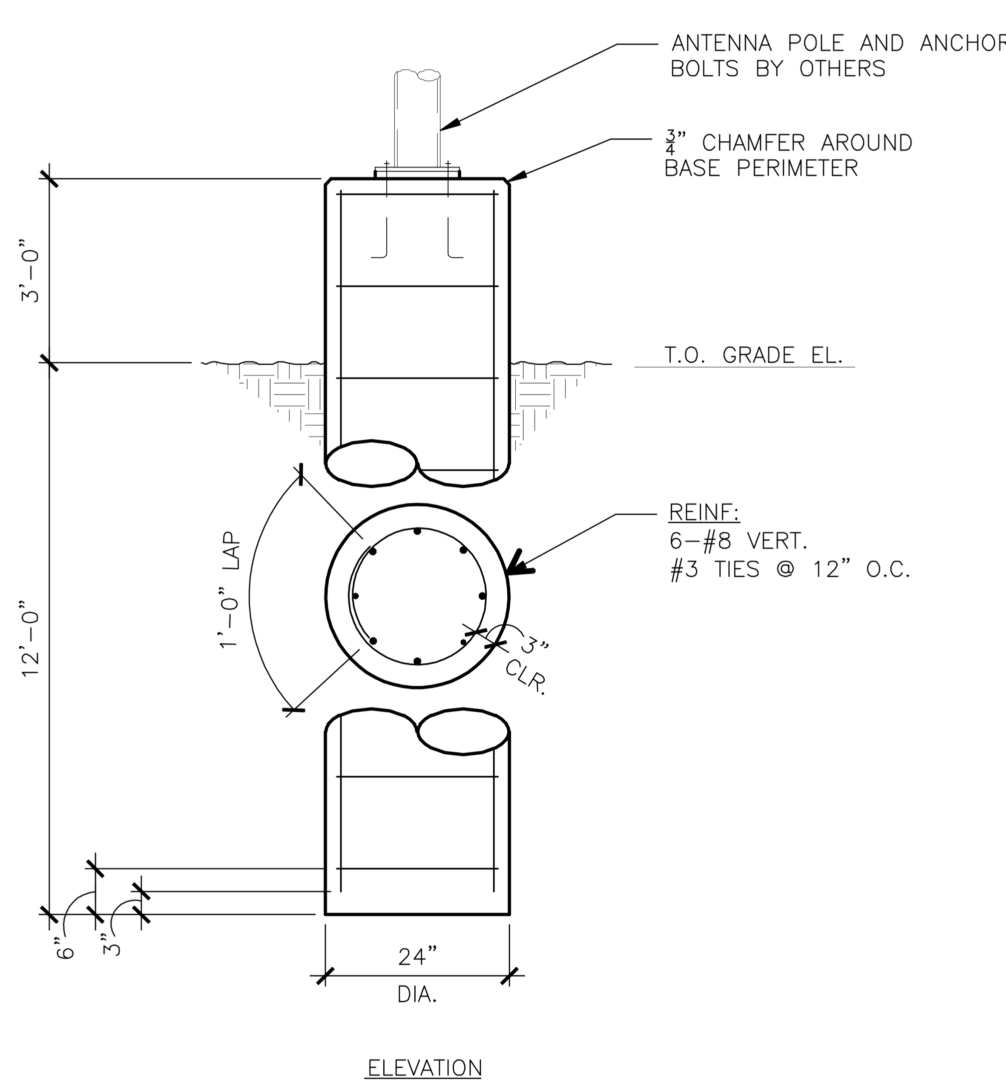

5 ANTENNA FOUNDATION SECTION
SCALE: 3/4" = 1'-0"

CADFILE: T:\MNTFAC\D22FTWCBC\704-00-857\02-77-470400857\Acad\prototypical pdfs\edcouch\Acad\Struct\504_S3_1.dwg Plotted: Fri. Aug. 07, 2009 @ 11:45 AM By: MBAZAN

Texas Department of Transportation
125 E. 11th Street
Austin, Texas 78701-2483
(512) 416-2449
Copyright © 2009 Texas Department of Transportation

THIS DOCUMENT IS RELEASED FOR THE PURPOSE OF
INFORMATION ONLY
NOT FOR REGULATORY
APPROVAL, PERMITTING,
OR CONSTRUCTION.

EDCOUCH
MAINTENANCE FACILITY
HIDALGO COUNTY, EDCOUCH TEXAS
PHARR DISTRICT

Revisions
△
△
△
△

Drawn by:
BH
Project No.

Date
05-26-2009
Sheet No.

S3.2
of X sheets

FOUNDATION DETAILS

NOTE: THIS DRAWING WAS CREATED FOR PRODUCTION ON 22" x 34" SHEET SIZE. DO NOT SCALE PRINTS.

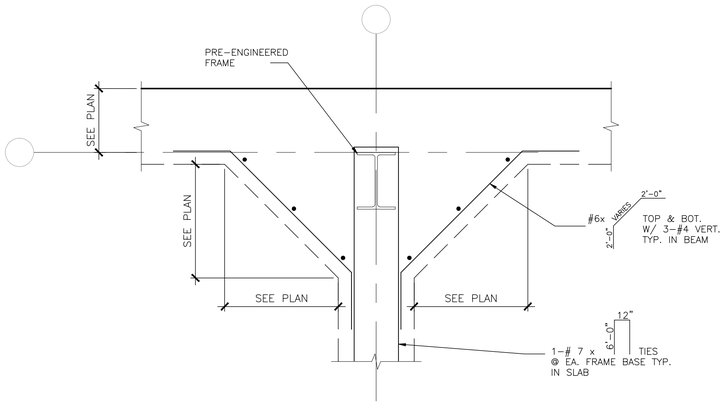

1 TYPICAL WIDENED BEAM PLAN
SCALE: N.T.S.

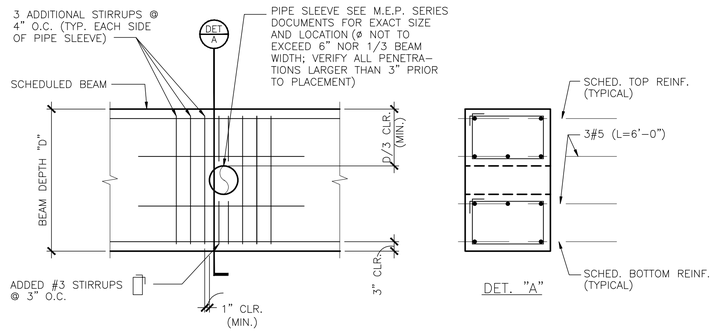

2 TYPCAL GRADE BEAM PENETRATION (SIMILAR @ VERTICAL PENETRATIONS)
SCALE: N.T.S.

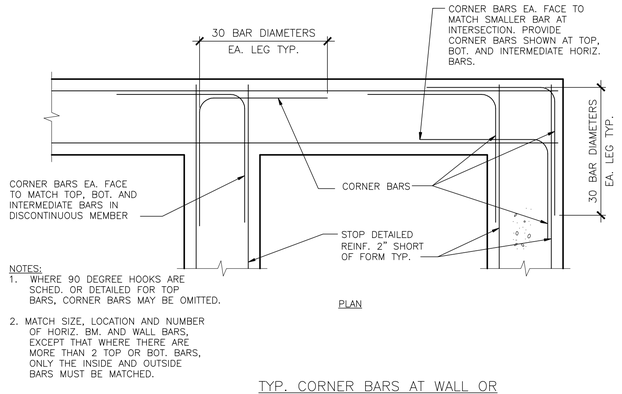

3 TYPCAL CORNER BARS AT WALL OR GRADE BEAM INTERSECTION DETAIL
SCALE: N.T.S.

TYP. CORNER BARS AT WALL OR GR. BM. INTERSECTION DET.

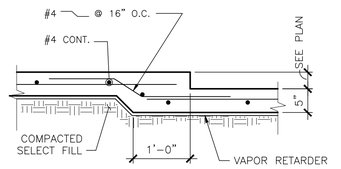

4 TYPICAL SLAB DROP DETAIL
SCALE: N.T.S.

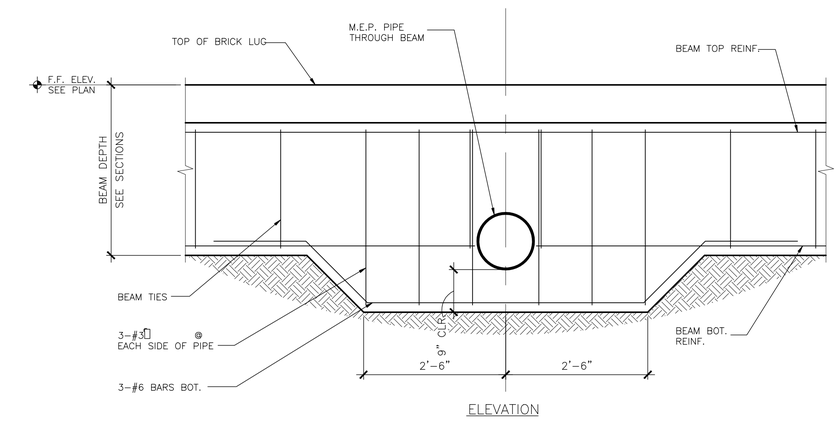

ELEVATION

5 TYPCAL BEAM REINFORCEMENT TRANSITIONS AT MECHANICAL PIPES
SCALE: N.T.S.

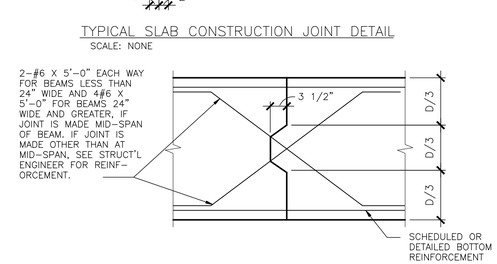

TYPICAL SLAB CONSTRUCTION JOINT DETAIL
SCALE: NONE

6 TYPCAL BEAM CONSTRUCTION JOINT ELEVATION SIDE OF BEAM
SCALE: N.T.S.

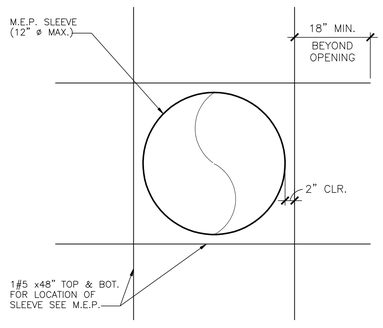

7 TYPICAL ROUND OPENING IN CONCRETE
SCALE: N.T.S.

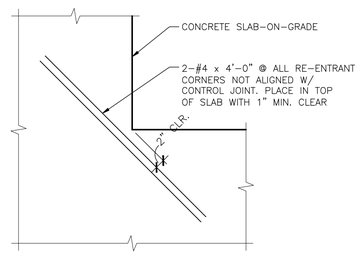

PLAN

8 TYPCAL SLAB ON GRADE RE-ENTRANT CORNER REINFORCING
SCALE: N.T.S.

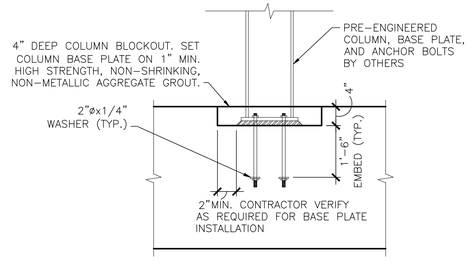

9 TYPICAL COLUMN BLOCKOUT DETAIL
SCALE: N.T.S.

TYPICAL FOUNDATION DETAILS

NOTE: THIS DRAWING WAS CREATED FOR PRODUCTION ON 22" x 34" SHEET SIZE. DO NOT SCALE PRINTS.

Texas Department of Transportation
125 E. 11th Street
Austin, Texas 78701-2483
(512) 416-3000

Copyright © 2005 Texas Department of Transportation

THIS DOCUMENT IS RELEASED FOR THE PURPOSE OF
INFORMATION ONLY
NOT FOR REGULATORY APPROVAL, PERMITTING, OR CONSTRUCTION.

EDCOUCH MAINTENANCE FACILITY
HIDALGO COUNTY, EDCOUCH TEXAS
PHARR DISTRICT

Revisions

Drawn by: BH
Project No.
Date 05-26-2009
Sheet No.
S3.3
of X sheets

CADFILE: T:\MNTR\ROD\DFTWC\SC-0704-00-857\02-77-4704005370\cad\dynrotdyn\sd pdf\edcouch\Acad\Structural\sd894_ss3_1.dwg Plotted: Fri. Aug. 07, 2009 @ 11:45 AM By: MBAZAN

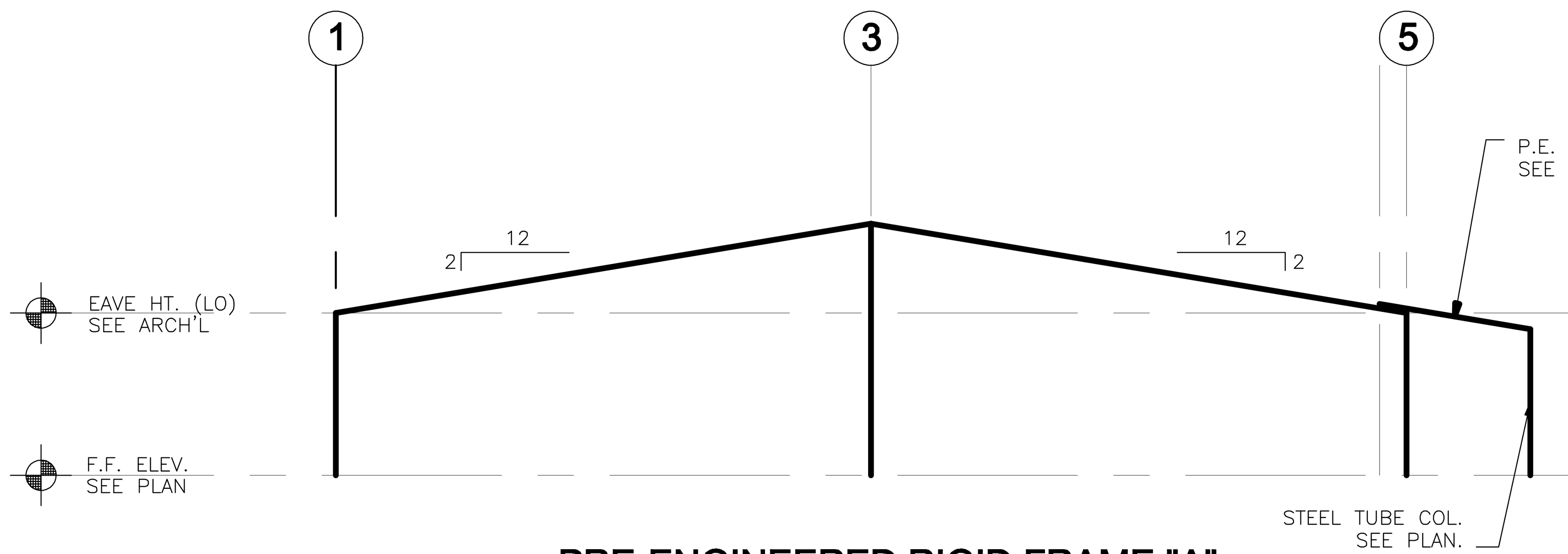

PRE-ENGINEERED RIGID FRAME "A"

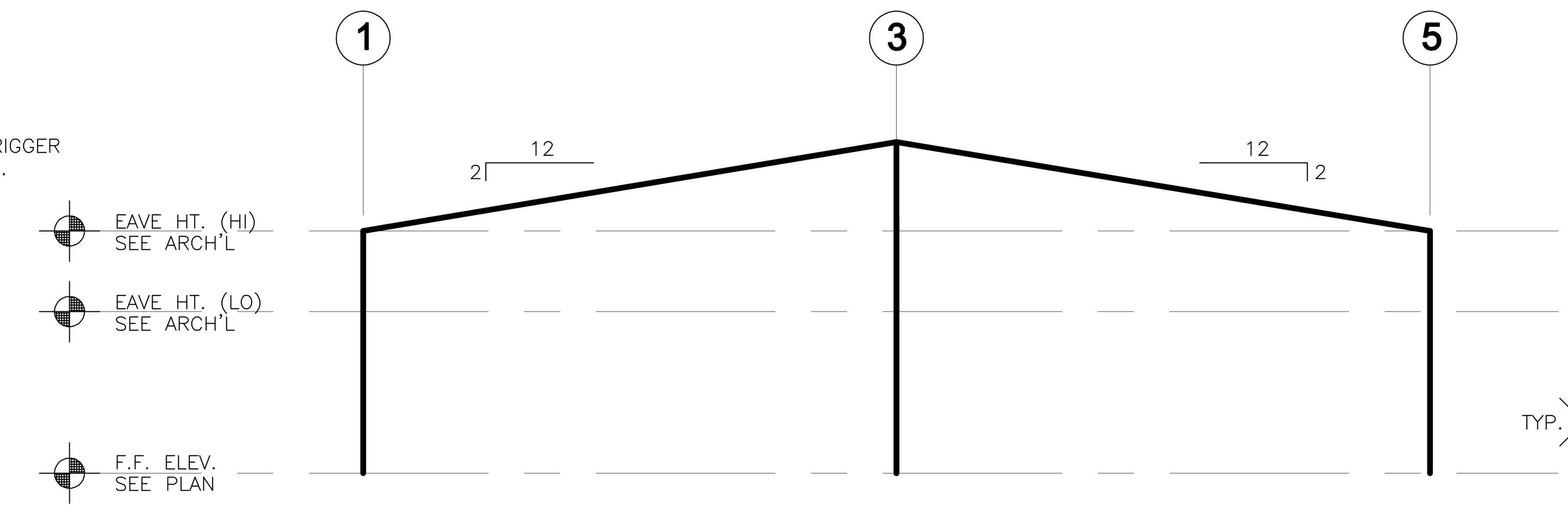

PRE-ENGINEERED RIGID FRAME "B"

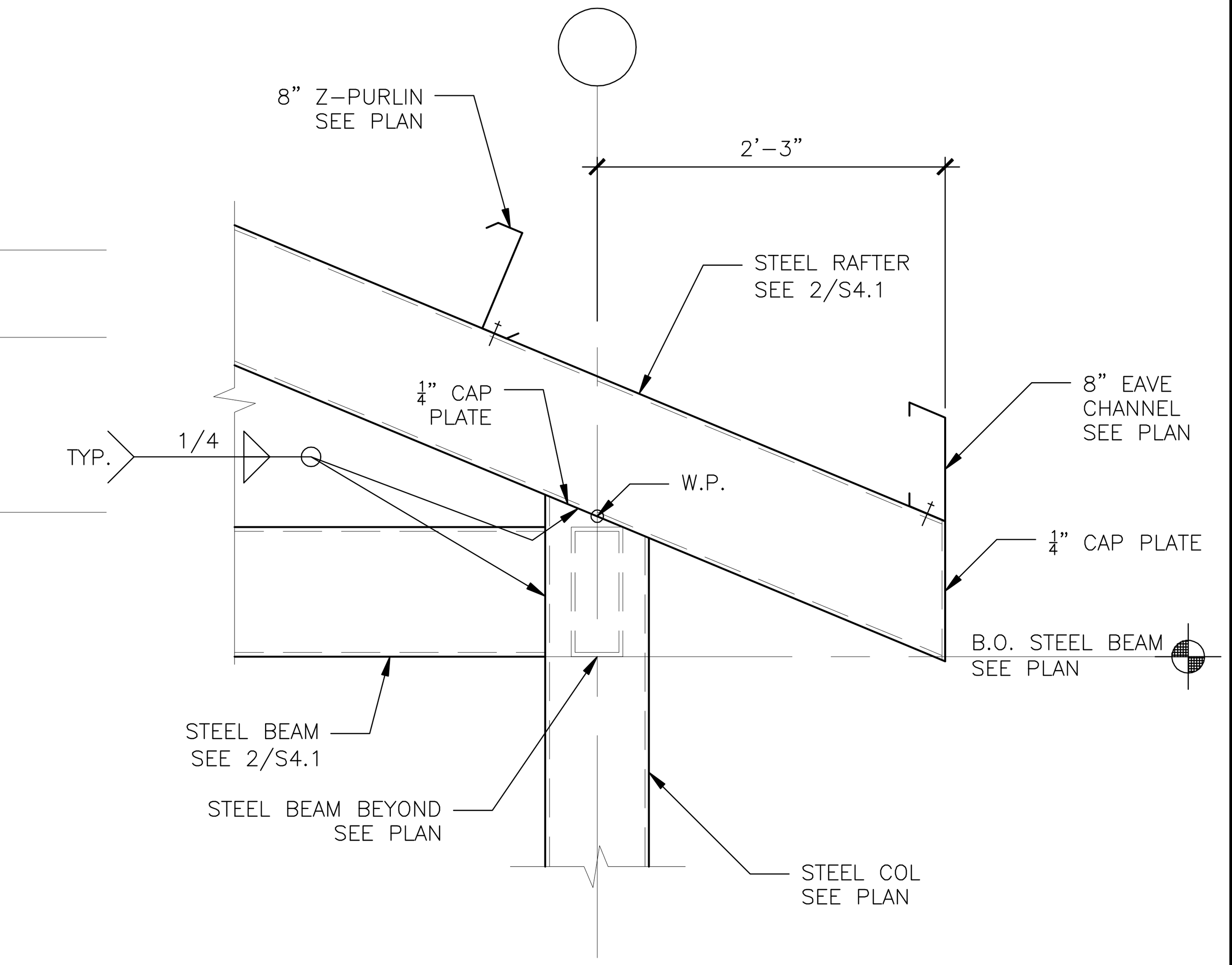

3 FRAMING DETAIL
SCALE: 1" = 1'-0"

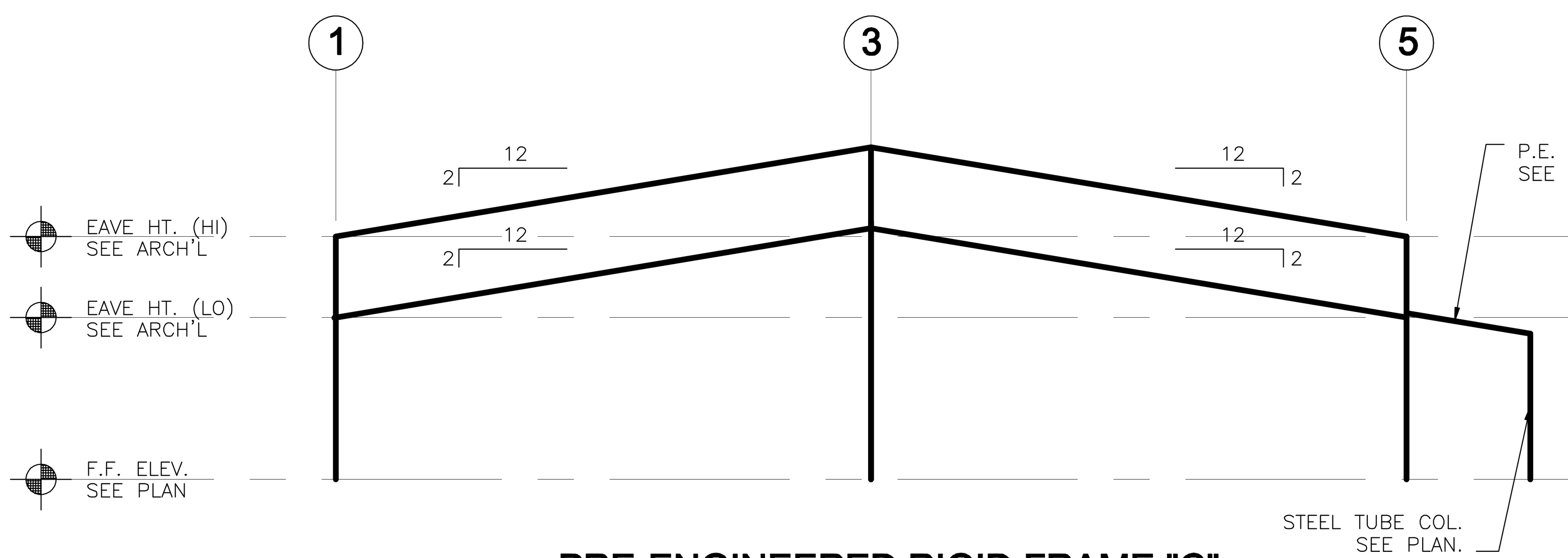

PRE-ENGINEERED RIGID FRAME "C"

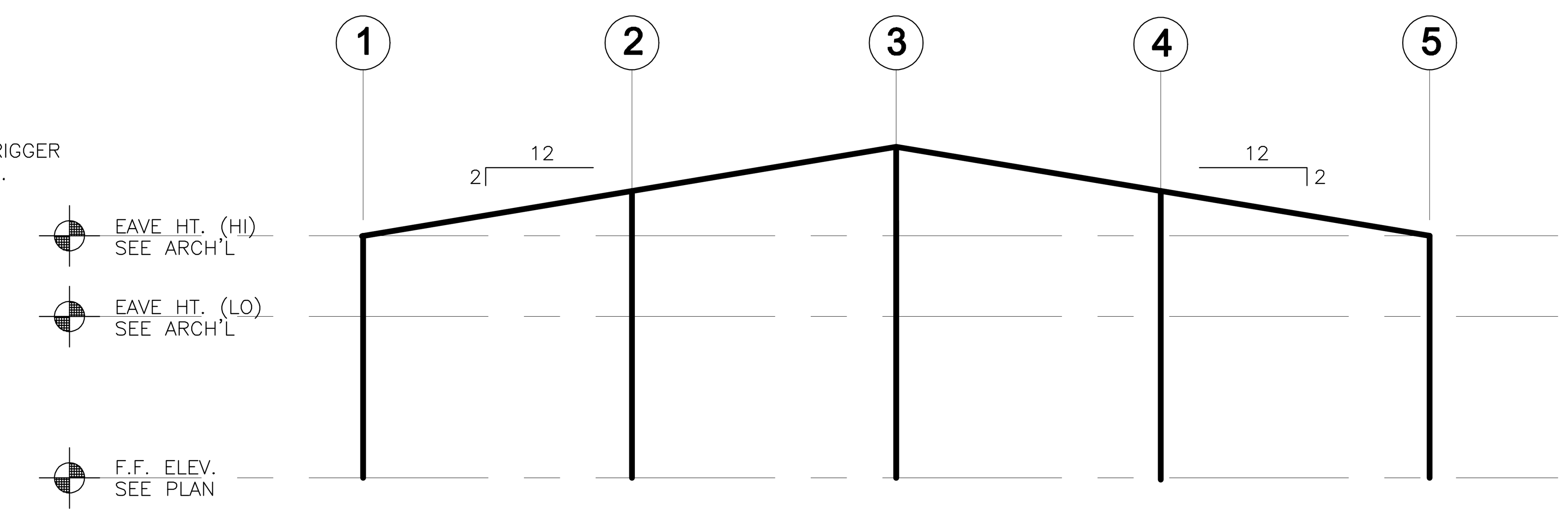

PRE-ENGINEERED RIGID FRAME "D"

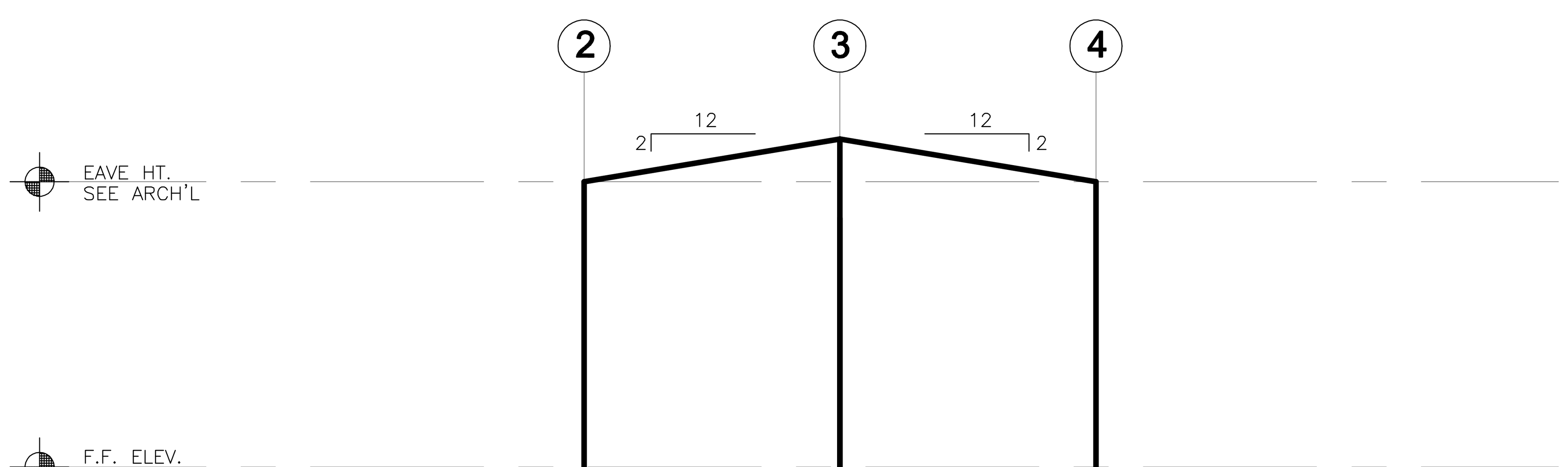

PRE-ENGINEERED RIGID FRAME "E"

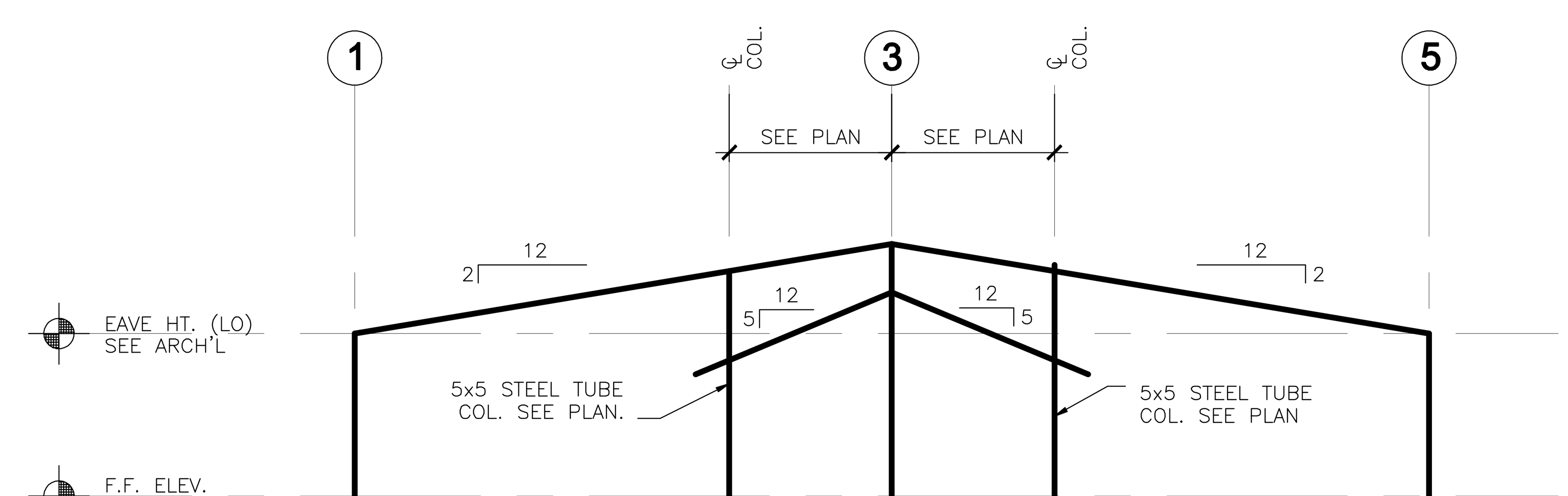

PRE-ENGINEERED RIGID FRAME "F"

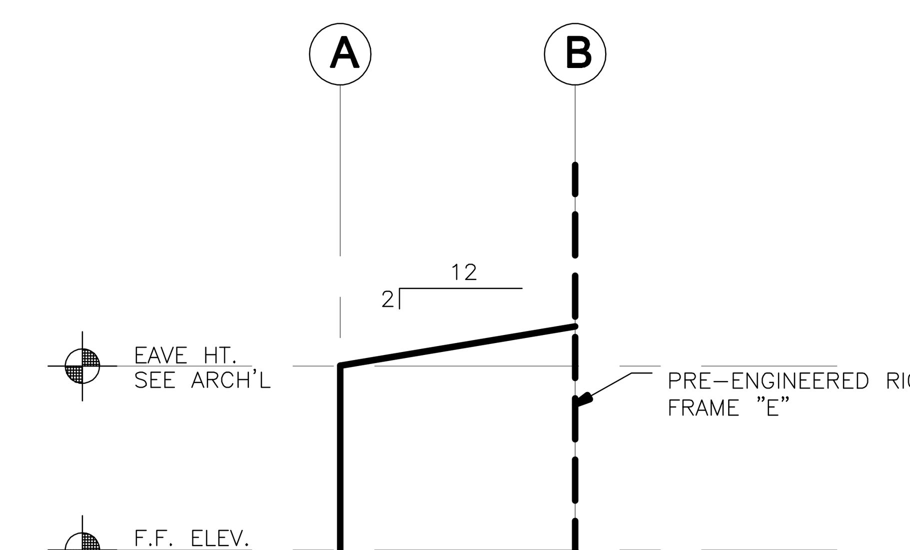

PRE-ENGINEERED RIGID FRAME "G"

1 PRE-ENGINEERED RIGID FRAME ELEVATIONS
SCALE: N.T.S.

NOTES:

1. ALL RIGID FRAME COLUMNS SHALL BE STRAIGHT (FLUSH WALL) DESIGN, WITH INSET WALL GIRTS. REFER TO ARCH'L FOR GIRT LOCATIONS.
2. FLANGE WIDTHS FOR ALL VERTICAL MEMBERS IN FRAME "F" SHALL BE A MAXIMUM OF 6 ½"
3. REFER TO ARCHITECTURAL DRAWINGS FOR EAVE HEIGHT ELEVATIONS.

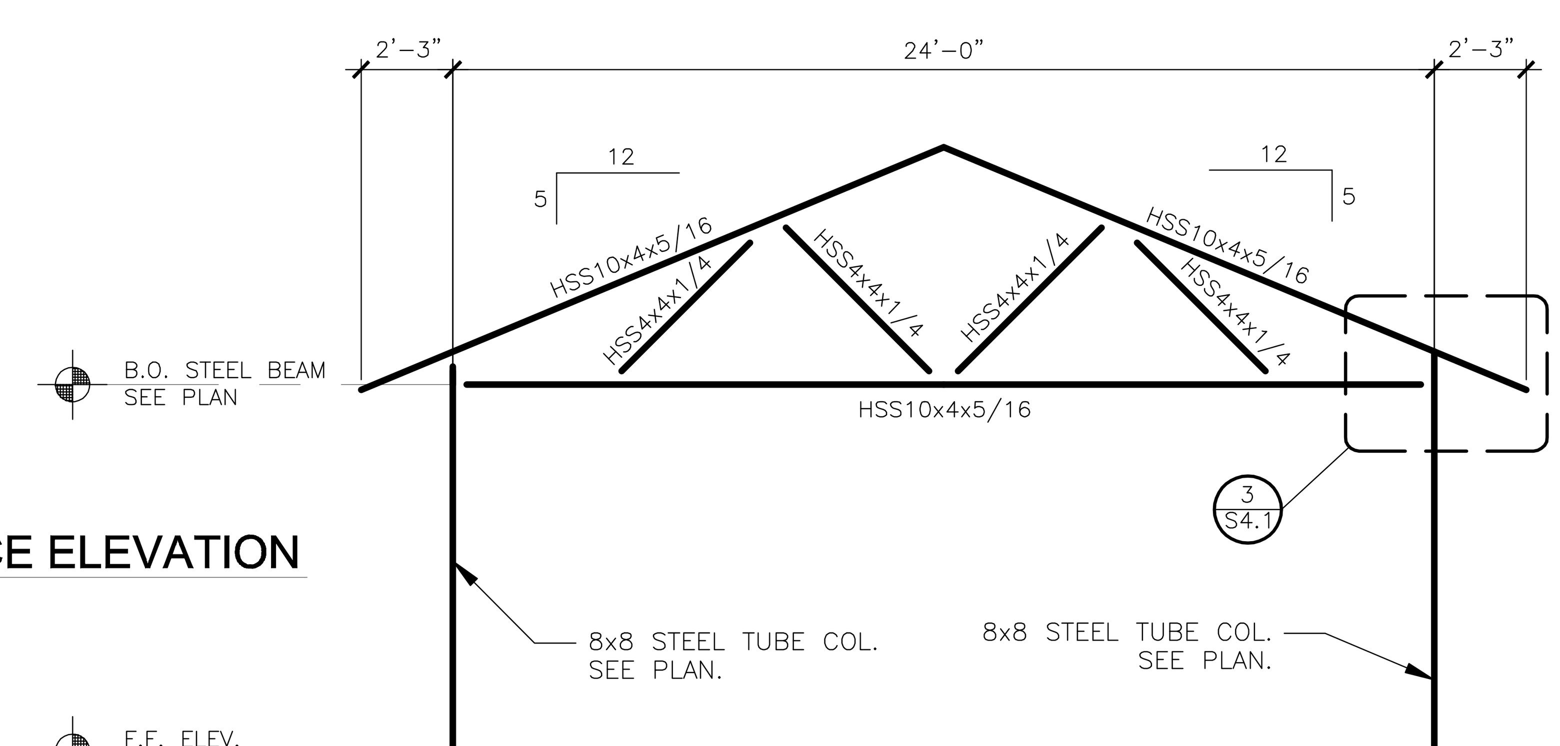

2 PRE-ENGINEERED ENTRANCE ELEVATION
SCALE: N.T.S.

NOTES:

1. REFER TO ARCHITECTURAL DRAWINGS FOR ACTUAL WEB MEMBER CONFIGURATION.
2. ALL MEMBERS SHALL BE FIELD WELDED WITH ¼" FILLET WELDS ALL CONTACT SURFACES.

PRE-ENGINEERED FRAME ELEVATIONS

NOTE: THIS DRAWING WAS CREATED FOR PRODUCTION ON 22" x 34" SHEET SIZE. DO NOT SCALE PRINTS.

Texas Department of Transportation
125 E. 11th Street
Austin, Texas 78701-2483
(512) 416-2040
Copyright © 2005 Texas Department of Transportation

THIS DOCUMENT IS RELEASED FOR THE PURPOSE OF INFORMATION ONLY
NOT FOR REGULATORY APPROVAL, PERMITTING, OR CONSTRUCTION.

EDCOUCH MAINTENANCE FACILITY
HIDALGO COUNTY, EDCOUCH TEXAS
PHARR DISTRICT

Revisions

Drawn by:
BH
Project No.

Date
05-26-2009
Sheet No.

S4.1
of X sheets

CADFILE: T:\MNTFMD\02FTWCSC\704-00-857\02-77-47040857\Acad\prototypical pdfs\edcouch\Acad\Struct\S4_S4_1.dwg Plotted: Fri, Aug. 07, 2009 @ 11:46 AM By: MBAZAN

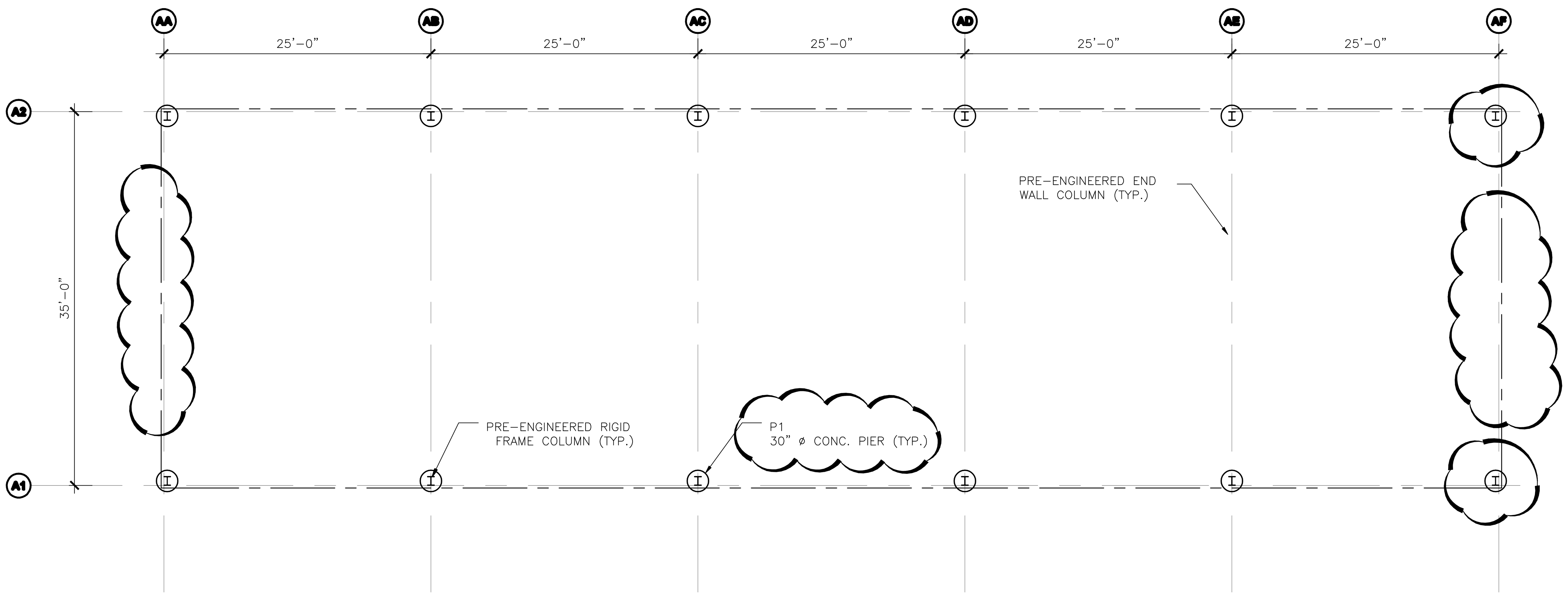

1 FOUNDATION PLAN
SCALE: 1/8" = 1'-0"

PLAN NORTH

PLAN NOTES:

1. REFERENCE T.O. PIER ELEVATION OF 0'-0".

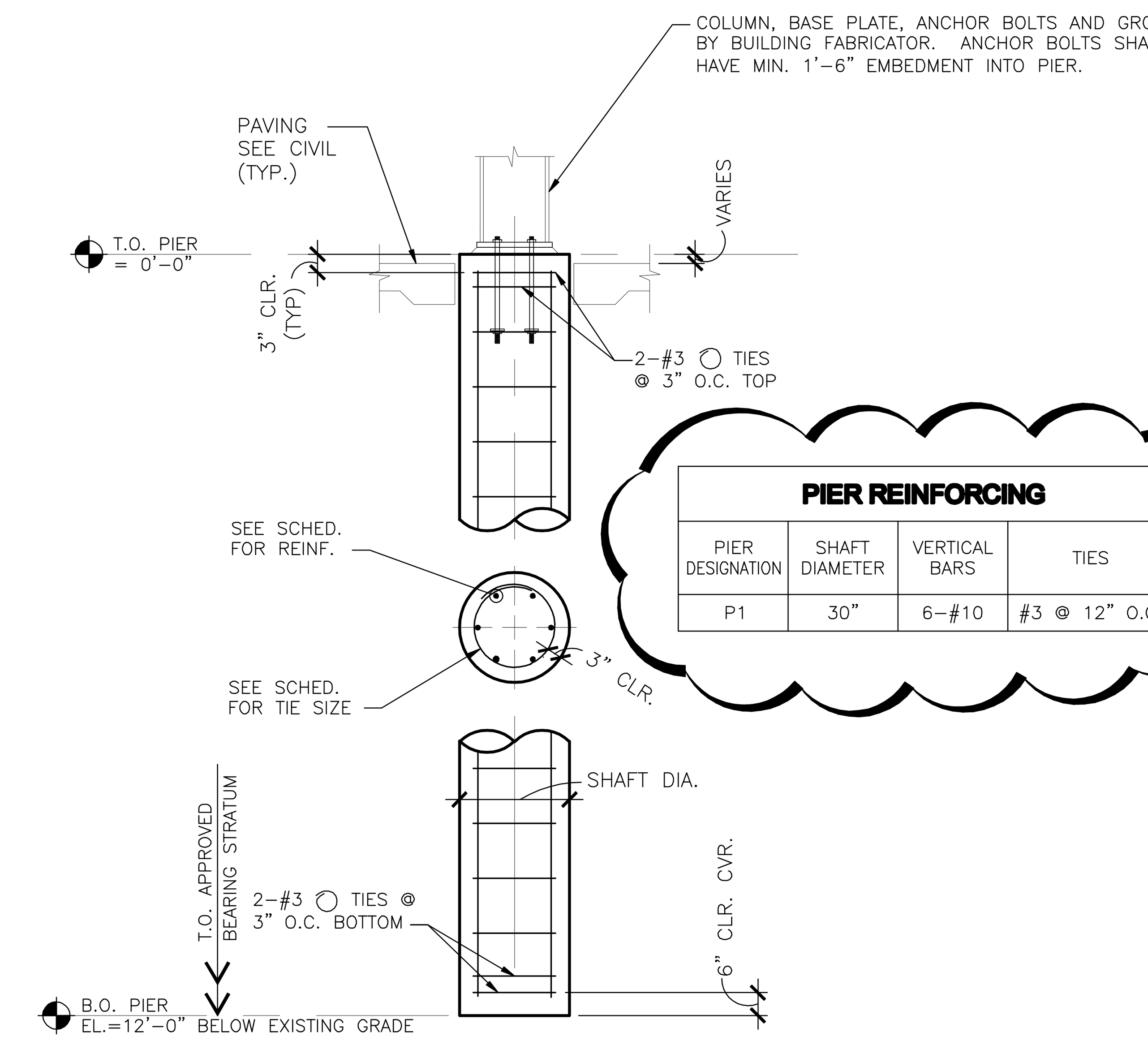

PIER REINFORCING

PIER DESIGNATION	SHAFT DIAMETER	VERTICAL BARS	TIES
P1	30"	6-#10	#3 @ 12" O.C.

3 TYPICAL PIER DETAIL
SCALE: N.T.S.

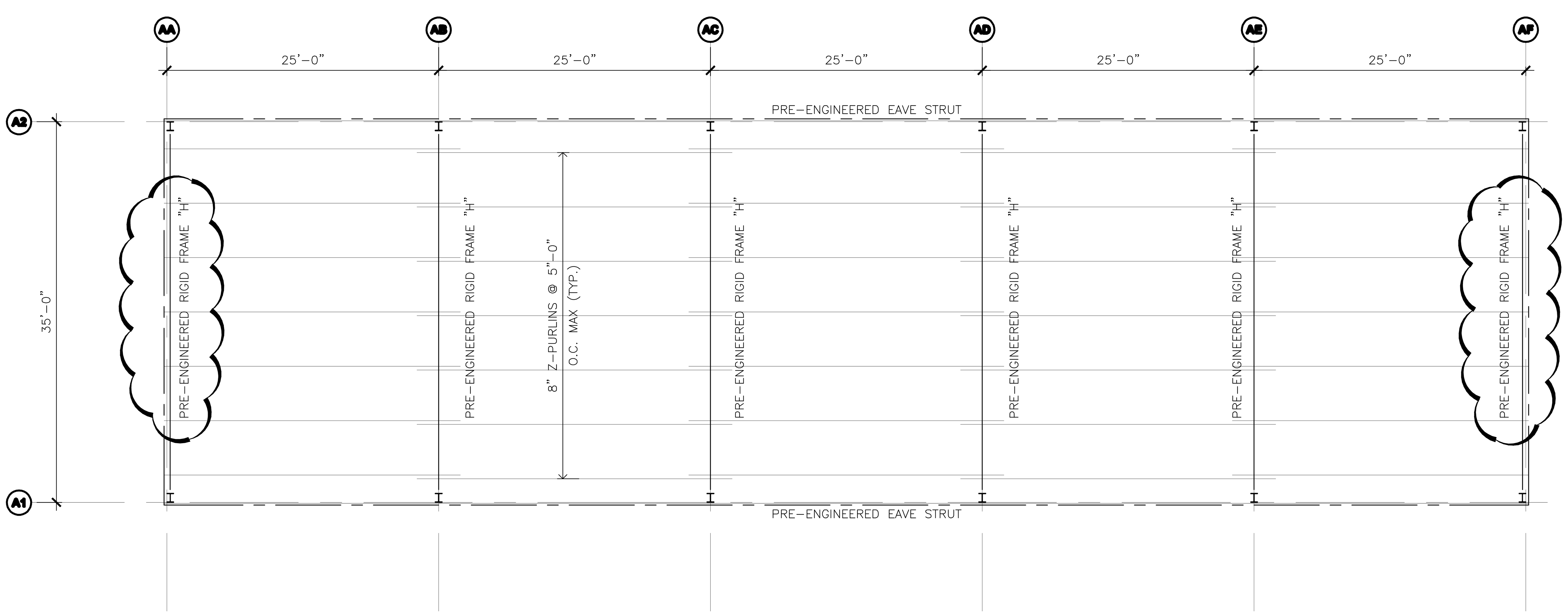

2 ROOF FRAMING PLAN
SCALE: 1/8" = 1'-0"

PLAN NORTH

PLAN NOTES:

1. ROOF DECK SHALL BE STANDING SEAM METAL ROOF. SEE ARCH'L FOR DETAILS.
2. PRE-ENGINEERED RIGID FRAMES SHALL HAVE INSET WALL GIRTS.

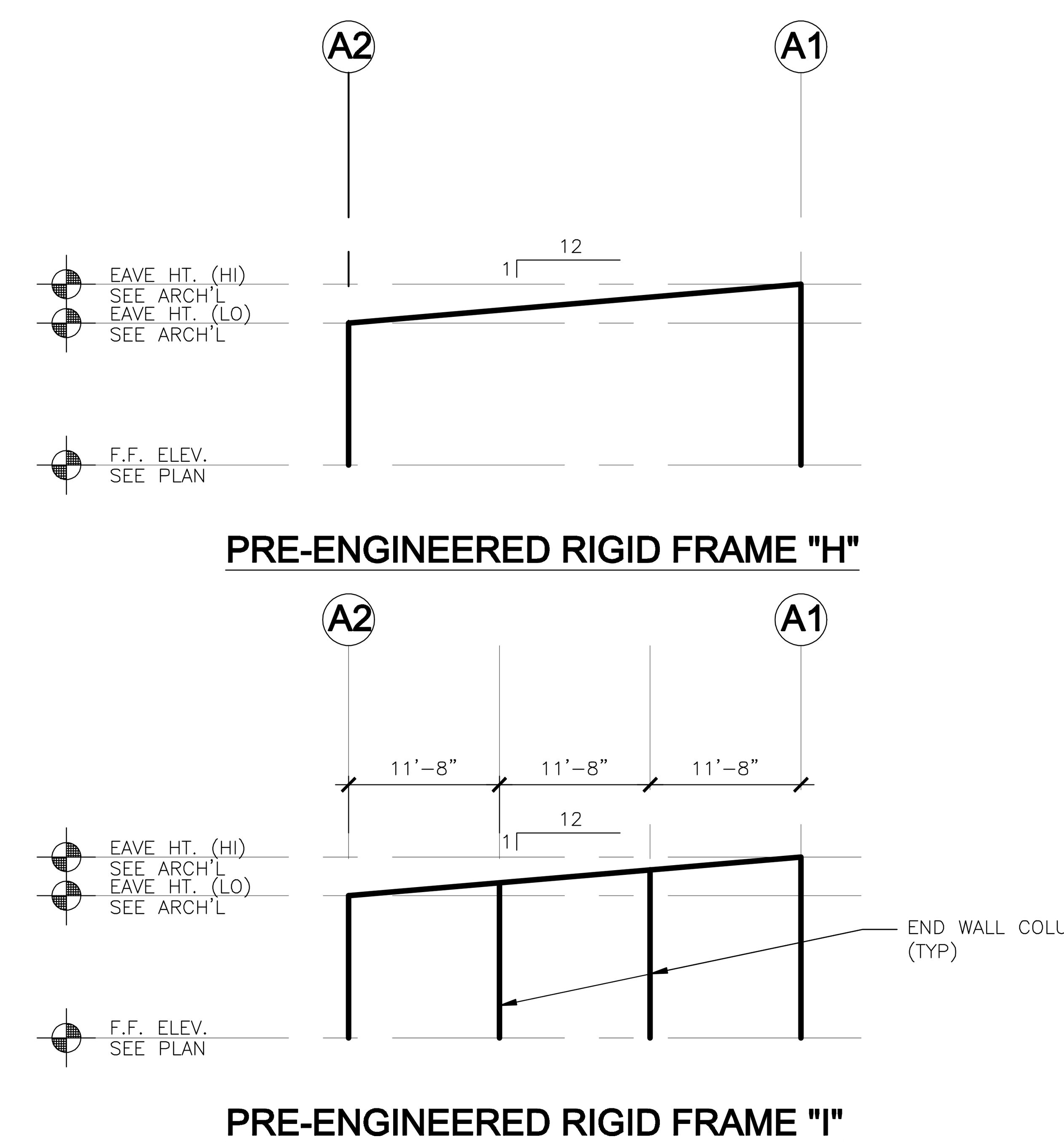

4 PRE-ENGINEERED FRAME ELEVATIONS
SCALE: N.T.S.

EQUIPMENT SHED: FOUNDATION & FRAMING PLANS, DETAILS

NOTE: THIS DRAWING WAS CREATED FOR PRODUCTION ON 22" x 34" SHEET SIZE. DO NOT SCALE PRINTS.

Texas Department of Transportation
125 E. 11th Street
Austin, Texas 78701-2483
(512) 416-2848

Copyright © 2005 Texas Department of Transportation

THIS DOCUMENT IS RELEASED FOR THE PURPOSE OF INFORMATION ONLY
NOT FOR REGULATORY APPROVAL, PERMITTING, OR CONSTRUCTION.

EDCOUCH MAINTENANCE FACILITY
HIDALGO COUNTY, EDCOUCH TEXAS
PHARR DISTRICT

Revisions

Drawn by: BH

Project No.

Date 05-26-2009

Sheet No.

S5.1

of X sheets

CADFILE: T:\MNTFMD\02FTWCSC\4704-00-037\02-77-4704000037\cad\prototypical pdfs\edcouch\Acad\Struc\664_S5_1.dwg Plotted: Fri, Aug. 07, 2009 @ 11:47 AM By: MBAZAN

MECHANICAL LEGEND

SUPPLY DIFFUSER	DUCT SIZE CHANGE
RETURN GRILLE, OR EXHAUST	RECTANGULAR ELBOW WITH TURNING VANES
VOLUME BALANCING DAMPER	XX / CFM — GRILLE TYPE — AIR FLOW
VENTILATION LOUVER	RECTANGULAR "BOOT" TAP
T THERMOSTAT S TEMP/HUMIDITY SENSOR H HUMIDISTAT	ROUND "CONICAL" FITTING WITH VOLUME DAMPER STATIONARY SPLITTER WITH TURNING VANES AND DAMPER
# / X# — DETAIL NUMBER — SHEET DESIGNATOR	VAINED, RADIUS ELBOW
RECTANGULAR DOUBLE WALL "BOOT" TAP FOR TRANSITION FROM SINGLEWALL TO DOUBLEWALL	RADIUS ELBOW W/ SQUARE THROAT

KEYED NOTES "⬡"

1. PROVIDE LOUVER LESS THAN 12" A.F.F AND ANOTHER LOUVER LESS THAN 12" FROM THE TOP OF THE WALL. COORDINATE WITH BUILDING STRUCTURE. (SEE ARCHITECTURAL AND STRUCTURAL DRAWINGS).
2. MOUNT TOP OF LOUVER 11 FEET A.F.F. COORDINATE WITH BUILDING STRUCTURE. (SEE ARCHITECTURAL AND STRUCTURAL DRAWINGS).
3. MOUNT TOP OF EXHAUST FAN 11 FEET A.F.F. COORDINATE WITH BUILDING STRUCTURE. (SEE ARCHITECTURAL AND STRUCTURAL DRAWINGS).
4. MOUNT BOTTOM OF LOUVER 18" A.F.F. COORDINATE WITH BUILDING STRUCTURE. (SEE ARCHITECTURAL AND STRUCTURAL DRAWINGS).
5. MOUNT BOTTOM OF WALL CURB FOR EXHAUST FAN AT 15 FEET A.F.F. COORDINATE WITH BUILDING STRUCTURE. (SEE ARCHITECTURAL AND STRUCTURAL DRAWINGS).
6. MOUNT BOTTOM OF PAC-FAN AT 14 FEET A.F.F. COORDINATE WITH BUILDING STRUCTURE. (SEE ARCHITECTURAL AND STRUCTURAL DRAWINGS).
7. MOUNT TOP OF LOUVER 16 FEET A.F.F. COORDINATE WITH BUILDING STRUCTURE. (SEE ARCHITECTURAL AND STRUCTURAL DRAWINGS).
8. MOUNT BOTTOM OF LOUVER 10 FEET 3 INCHES A.F.F. COORDINATE WITH BUILDING STRUCTURE. (SEE ARCHITECTURAL AND STRUCTURAL DRAWINGS).
9. INSTALL VIBRATION ISOLATION PADS. MAINTAIN CLEARANCES BETWEEN EACH UNIT AND EDGE OF PAD AS DESCRIBED IN THE GENERAL NOTES.
10. ROUTE FREON LINES AND CONTROL WIRING ABOVE CEILING ON EXTERIOR WALL INSIDE PROVIDED DOWNSPOUT BLANK. COORDINATE WITH METAL BUILDING CONTRACTOR SLOT DOWNSPOUT TO SLIP REFRIGERANT LINES INTO 6X6 DOWNSPOUT CAVITY WITH SLOT FACING THE BUILDING. PENETRATE EXTERIOR WALL WITH ADDITIIONAL DOWNSPOUT SECTION TO SERVE AS A SLEEVE CONTRACTOR SHALL FLASH AROUND SLEEVE FILL SLEEVE ANNULAR SPACE WITH SEALANT. EXPOSED SECTIONS SHALL HAVE ALUMINUM JACKET.
11. ROUTE 3/4" HARDDRAWN TYPE "K" COPPER PIPING CONDENSATE DRAIN FROM EACH INDOOR UNIT TO FLOOR DRAIN IN ROOM. TERMINATE EACH CONDENSATE DRAIN OVER FLOOR DRAIN FUNNEL, MAINTAIN SLOPE 1/8" TO 1/4" PER FOOT WITH AN ELBOW INSTALLED IN THE DOWN POSITION. PROVIDE 1" AIR GAP ABOVE FUNNEL.
12. EXTEND CONDENSATE HOSE DRAIN WITH 3/4" HARDDRAWN TYPE "K" COPPER PIPING IN-WALL FROM DUCTLESS INDOOR UNIT TO MOP SINK, MAINTAIN SLOPE 1/8" TO 1/4" PER FOOT WITH AN ELBOW INSTALLED IN THE DOWN POSITION. PROVIDE 1" AIR GAP ABOVE MOP SINK.
13. PROVIDE AND INSTALL PLEATED FILTERS AND SUPPLY AND RETURN FLEXIBLE CONNECTORS FOR EACH INDOOR UNIT PER MANUFACTURER RECOMMENDATIONS.
14. INSTALL THERMOSTAT ON WALL 48" A.F.F. COORDINATE FINAL LOCATION WITH MODULAR FURNITURE AND EQUIPMENT.
15. MOUNT INDOOR UNIT CENTERED ON WALL 7FT ABOVE FINISHED FLOOR TO THE BOTTOM OF UNIT, COORDINATE WITH TRADES TO ENSURE UNIT DOES NOT OBSTRUCT OTHER EQUIPMENT IN ROOM.
16. ALL GRILLES AND DIFFUSERS IN ALL SPACES SHALL BE COORDINATED WITH BUILDING STRUCTURE AND SUPPORTED AT ALL FOUR CORNERS. (SEE ARCHITECTURAL AND STRUCTURAL DRAWINGS).
17. PROVIDE A LISTED TYPE "L" VENT EXTEND TO 24" ABOVE ROOF. DROP DOWN BELOW STRUCTURE MAKE FINAL CONNECTION TO PRESSURE WASHER AND INCINERATOR EACH VENT SIZE SHALL MATCH MANUFACTURER'S RECOMMENDATIONS.
18. DISCHARGE EXHAUST AIR THROUGH LOUVER. SUSPEND EXHAUST FAN WITH UNISTRUT AND RUBBER IN-SHEAR VIBRATION ISOLATORS. IN-LINE EXHAUST FANS SHALL HAVE A SHORT PIECE OF INLET DUCT TURN DUCT DOWN PROVIDE ALUMINUM INSECT SCREEN ON INLET.
19. COORDINATE WITH BUILDING STRUCTURE. (SEE ARCHITECTURAL AND STRUCTURAL DRAWINGS). INSTALL ASSEMBLY TO MANUFACTURER RECOMMENDATIONS. SECURE THE MOUNTING PLATFORM TO BUILDING BEAM. DUCT FAN DISCHARGE TO LOUVER.
20. COORDINATE WITH ELECTRICAL. MECHANICAL SHALL SUPPLY ALL THERMOSTATS. ELECTRICAL SHALL PROVIDE WIRE AND CONDUIT AND INSTALL THE 120V THERMOSTATS WHICH SHALL CONTROL THE HEATERS.
21. INSTALL TOP OF HEATER 12 FT A.F.F AT AN ANGLE OF 10 DEGREES FROM VERTICAL AWAY FROM THE NEAREST WALL.
22. FIRE CAULK ALL PENETRATIONS IN FIRE WALL REFER TO ARCHITECTURAL PLANS.
23. COORDINATE ELEVATIONS WITH STRUCTURE. DUCT UP ABOVE THE CEILING GRID PENETRATE THE THE WALL FIRE CHALK PENETRATIONS.
24. DUCT EXHAUST AIR PARALLEL WITH ROOF DECK ABOVE OVERHEAD DOORS DROP DOWN AT WALL TO FLOOR 20"X10", LEAVE BOTTOM OF DUCT OPEN 18" A.F.F. PROVIDE AND INSTALL INSECT SCREEN ON INLET.
25. DUCT EXHAUST AIR PARALLEL WITH ROOF DECK ABOVE OVERHEAD DOORS DROP DOWN AT WALL BEHIND HEATER FIRE CHALK WALL PENETRATION DROP DOWN WALL INSIDE JANITORS CLOSET DUCT THRU WALL PROVIDE SHEETMETAL FRAME WITH ALUMINUN INSECT SCREEN WITH A 20"X10" INLET 18" A.F.F.
26. DUCT MAKEUP AIR PARALLEL WITH ROOF DECK ABOVE OVERHEAD DOORS DROP DOWN AT WALL TO FLOOR 34"X14", LEAVE BOTTOM OF DUCT OPEN 18" A.F.F. PROVIDE AND INSTALL INSECT SCREEN ON OUTLET.
27. PROVIDE ALUMIMUM LARGE SIGN WITH REFLECTIVE LETTERS SIGN SHALL READ "DO NOT PARK LPG FUELED VECHICLES IN THIS BAY". MOUNT 7 FT A.F.F.
28. PROVIDE ADEQUATE SPACE FOR CONDUITS ENTERING AND LEAVING PANELBOARD AE BENEATH DUCT. TRANSISTION DUCTWORK ELEVATION AS IF REQUIRED COORDINATE REQUIRED CLEARANCES WITH ELECTRICAL.

APPLIES TO ALL M-SHEETS

GENERAL NOTES

1. NOTE THAT CONSTRUCTION DRAWINGS ARE DIAGRAMMATIC BY THEIR NATURE, AND ARE NOT INTENDED TO SHOW EVERY CONNECTION IN DETAIL OR EVERY PIPE, DUCT OR CONDUIT IN ITS EXACT LOCATION. FEATURES AND COMPONENTS NOT SHOWN ARE SUBJECT TO THE REQUIREMENTS OF STANDARDS REFERENCED ELSEWHERE IN THE CONSTRUCTION DOCUMENTS. THE CONTRACTOR SHALL COORDINATE THE VARIOUS TRADES IN ORDER TO AVOID INTERFERENCE BETWEEN THE VARIOUS SEGMENTS OF THE PROJECT.
2. ALL WORK SHALL BE INSTALLED PARALLEL OR PERPENDICULAR TO THE BUILDING LINES.
3. DIFFUSERS SHALL BE CENTERED IN THE ROOM OR AREA INDICATED. DIFFUSERS SHALL ALSO BE SPACED EVENLY AS SHOWN IN THE PLAN. COORDINATE WITH THE REFLECTED CEILING PLAN FOR EXACT LOCATIONS.
4. ALL DUCTWORK DIMENSIONS INDICATED IN PLANS ARE CLEAR UNOBSTRUCTED FREE AREA DIMENSIONS.
5. INSULATE ALL SINGLE WALL RECTANGULAR AND ROUND SINGLE WALL DUCTWORK INCLUDING SUPPLY AIR, RETURN AIR, EXHAUST DUCT AND OUTSIDE AIR, WITH EXTERNAL 2" BLANKET TYPE INSULATION. INSULATION SHALL HAVE A FOIL, REINFORCED KRAFT PAPER (FRK) VAPOR BARRIER FACING, AS SPECIFIED. INSULATE THE BACKSIDE OF ALL AIR DEVICES IF NOT SUPPLIED WITH FACTORY INSULATION.
6. DUCT WORK TRANSITIONS SHALL HAVE MAXIMUM 15° CONVERGENCE, UNLESS NOTED OTHERWISE.
7. CHANGES IN DIRECTION IN ROUND DUCT WORK SHALL BE MADE USING 4-SECTION ADJUSTABLE "90's" OR 3-SECTION ADJUSTABLE "45's".
8. ALL 90° TURNS IN SUPPLY RECTANGULAR DUCT SHALL BE INSTALLED WITH TURNING VANES.
9. ALL DUCTWORK SHALL BE PROVIDED PER SMACNA 2" W.G. REQUIREMENTS. SUPPORT ALL DUCTWORK WITH UNISTRUT AND HANGERS PER SMACNA AND MANUFACTURERS RECOMMENDATIONS.
10. ALL DROPS TO SUPPLY DIFFUSERS, RETURN DUCTS, EXHAUST GRILLES, AND ALL OUTSIDE AIR SUPPLIES, SHALL HAVE VOLUME BALANCING DAMPERS INSTALLED AT MAIN DUCT TAP.
11. ALL TAP CONNECTIONS IN RECTANGULAR DUCT FOR ROUND SHEETMETAL SHALL BE INSTALLED USING CONICAL BELLMOUTH WITH 1" FLANGE AND GASKET SPIN-IN CONNECTOR WITH DAMPER INCLUDING 2" BUILD OUT, NYLON BUSHINGS, LOCKING QUADRANT AND HANDLE.
12. DUCT SEALANT SHALL BE LATEX BASED, WATER SOLUBLE. SOLVENT BASED DUCT SEALANT IS PROHIBITED.
13. ALL AREAS: INSULATED FLEXIBLE HELICAL REINFORCED DUCT IS PERMITTED AT THE DIFFUSERS, MAXIMUM LENGTH IS 4FT. ALL FLEXIBLE METAL DUCT SHALL HAVE A FLAME RETARDANT VAPOR BARRIER.
14. DUCTWORK CONNECTIONS TO ALL EQUIPMENT SHALL BE MADE WITH FLEXIBLE VIBRATION DAMPENING CONNECTIONS.
15. USE SPRING ISOLATORS ON ALL SUSPENDED MECHANICAL EQUIPMENT HEAVIER THAN ONE-HUNDRED POUNDS. SUSPEND ALL MECHANICAL EQUIPMENT LIGHTER THAN ONE-HUNDRED POUNDS WITH RUBBER-IN-SHEAR VIBRATION ISOLATORS.
16. ALL REFRIGERANT LINES SHALL SLOPE IN THE DIRECTION OF FLOW AND BE SIZED BY THE MANUFACTURES RECOMMENDATIONS AND MANUFACTURER SOFTWARE PROGRAMS TO ACCOMMODATE VERTICAL RISERS AT PARTIAL LOADS, MINIMIZING PRESSURE DROPS AND CAPACITY LOSS, AVOID TRAPPING OIL AT PART LOAD OPERATION, PREVENT CONDENSED REFRIGERANT AND OIL IN THE LINE FROM DRAINING BACK TO THE HEAD OF THE COMPRESSOR.
17. ALL REFRIGERANT LINES SHALL BE INSULATED WITH 1/2" ARMAFLEX (OR APPROVED EQUAL) CLOSED CELL FOAM PIPE INSULATION. INSULATION INSTALLED WHERE EXPOSED OUTDOORS SHALL BE FINISHED WITH 0.016 INCH THICK CORRUGATED ALUMINUM JACKETING SECURED WITH ALUMINUM BANDS. PROVIDE PRE-MOLDED ALUMINUM FITTING COVERS FOR FITTINGS, VALVES, ETC.. SEAL ALL JOINTS WITH CLEAR SILICONE SEALANT. NEATLY ROUTE THE REFRIGERANT LINES TOGETHER FOR THE ENTIRE LENGTH MAINTAIN MANUFACTURER RECOMMENDED SIZES AND SLOPES.
18. PRIMARY AND SECONDARY CONDENSATE LINES SHALL BE MINIMUM 3/4" TYPE "K" COPPER, AND INSULATED WITH 1/2" ARMAFLEX.
19. OUTSIDE AIR INTAKES SHALL BE INSTALLED AS INDICATED. MAINTAIN A DISTANCE OF AT LEAST 10 FT AWAY FROM ANY EXHAUST FAN, FLUE, COMBUSTION AIR VENT, AND/OR SANITARY SEWER VENT.
20. PROVIDE 4" SQUARE RESILIENT NEOPRENE AND CORK VIBRATION ISOLATION PADS ON ALL FOUR CORNERS OF CONDENSING UNITS. ALL CONDENSING UNITS SHALL BE INSTALLED ON AN EQUIPMENT PAD, IF SHOWN ON THE ROOF A ROOF CURB SHALL BE PROVIDED (SEE THE ARCHITECT PLANS). MAINTAIN 36" CLEARANCE BETWEEN EACH UNIT, MINIMUM 48" FROM THE BUILDING STRUCTURE, AND MINIMUM 6" TO EDGE OF PAD, ALL SIDES. CONDENSING UNITS LARGER THAN FIVE TONS SHALL HAVE AN ADDITIONAL ISOLATION PAD ON EACH SIDE LOCATED IN THE CENTER OF THE UNIT AND 72" CLEARANCE FROM ALL OTHER UNITS.
21. SLEEVE ALL WALL PENETRATIONS WITH SLEEVE 2 PIPE SIZES LARGER THAN PENETRATING PIPE. SLEEVE AND PENETRATING PIPE SHALL BE CONSTRUCTED FROM THE SAME MATERIAL. MAINTAIN INSULATION THROUGH SLEEVES. CENTER BLOCK WALLS FILLED WITH CEMENT OR MORTAR SHALL BE CORE DRILLED TO SERVE AS SLEEVE.
22. ALL EXTERIOR, SLAB AND CONDITIONED TO NON-CONDITIONED PENETRATIONS, PACK ANNULAR SPACE WITH MINERAL WOOL. SEAL EACH EXTERIOR END AND TOP END OF SLAB PENETRATION WITH SEALANT (SEE ARCHITECTURAL SPECIFICATIONS).
23. FIRE CAULK ALL PIPE PENETRATIONS WHERE ARCHITECTURAL PLANS CALL FOR FIRE RATED CONSTRUCTION WALLS. STOP INSULATION SHORT OF SLEEVE FILL ANNULAR SPACES WITH FIRE RATED CAULK.
24. FIRE CAULK ALL DUCT PENETRATIONS WHERE ARCHITECTURAL PLANS CALL FOR FIRE RATED CONSTRUCTION WALLS.
25. EQUIPMENT ACCESS PANELS SHALL REMAIN ACCESSIBLE.

Texas Department of Transportation
125 E. 11th Street
Austin, Texas 78701-2483
(512) 416-3048
Copyright © 2005 Texas Department of Transportation

THIS DOCUMENT IS RELEASED FOR THE PURPOSE OF INFORMATION ONLY
NOT FOR REGULATORY APPROVAL, PERMITTING, OR CONSTRUCTION.

EDCOUCH MAINTENANCE FACILITY
HIDALGO COUNTY, EDCOUCH TEXAS
PHARR DISTRICT

Revisions

Drawn by: CON
Project No.
Date 05-26-2009
Sheet No. M2.0
of 5M sheets

MECHANICAL GENERAL NOTES, KEYED NOTES AND SYMBOLS

NOTE: THIS DRAWING WAS CREATED FOR PRODUCTION ON 22" x 34" SHEET SIZE. DO NOT SCALE PRINTS.

CADFILE: T:\MNTFMD02FTWCBC4704-00-857\02-77-470400857\Acad\prototypical pdfs\edcouch\Acad\MEP\MECH\M2_0.dwg Plotted: Fri. Aug. 07, 2009 @ 11:34 AM By: MBAZAN

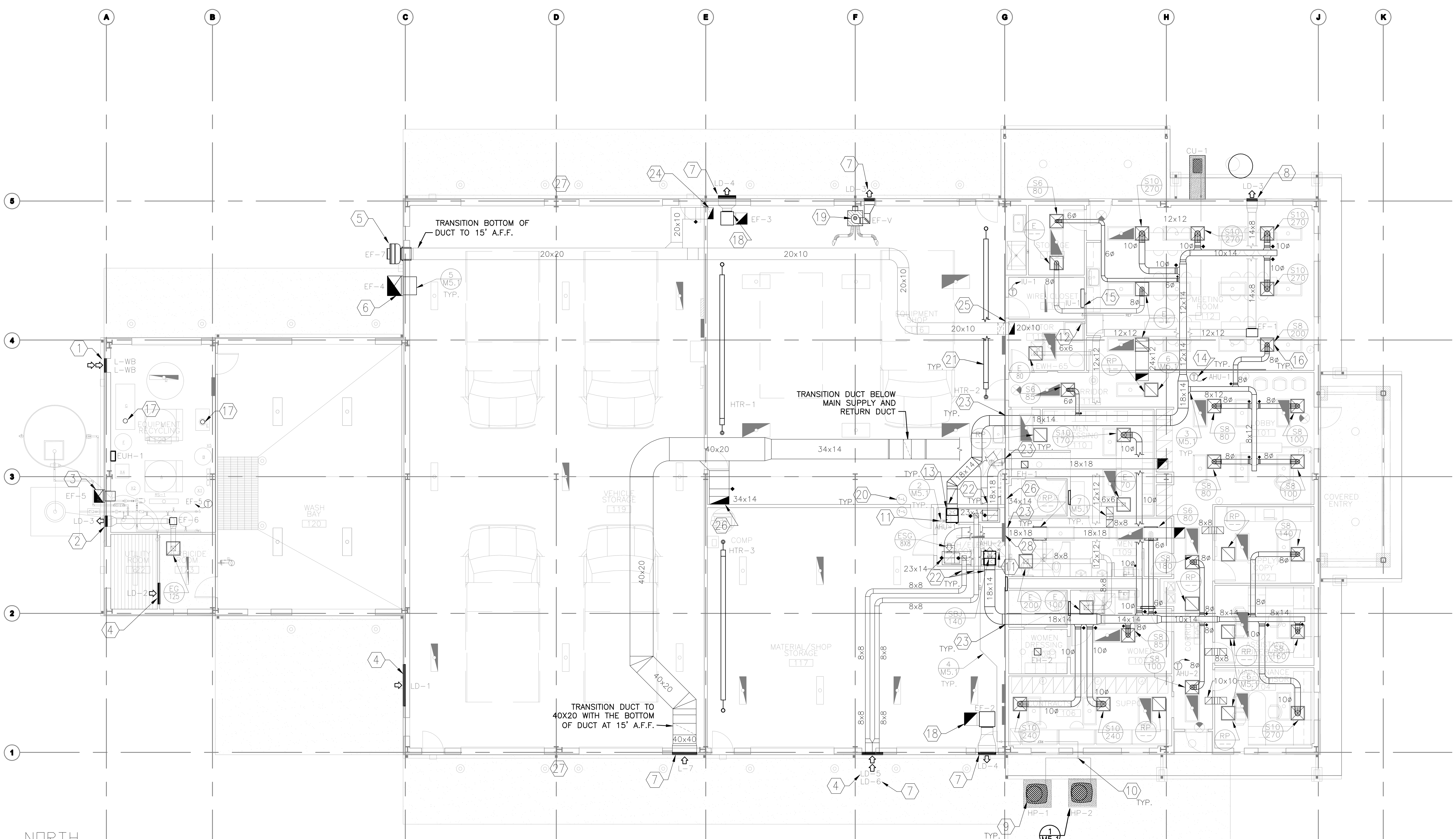

1 MECHANICAL FLOOR PLAN

SCALE: 1/8" = 1'-0"

SEE M2.0 FOR GENERAL AND KEYED NOTES

Texas Department of Transportation
125 E. 11th Street
Austin, Texas 78701-2483
(512) 416-2840
Copyright © 2005 Texas Department of Transportation

THIS DOCUMENT IS RELEASED FOR THE PURPOSE OF
INFORMATION ONLY
NOT FOR REGULATORY
APPROVAL, PERMITTING,
OR CONSTRUCTION.

EDCOUCH MAINTENANCE FACILITY
HIDALGO COUNTY, EDCOUCH TEXAS
PHARR DISTRICT

Revisions

Drawn by:
CON

Project No.

Date
05-26-2009

Sheet No.
M2.1
of 5M sheets

MECHANICAL PLAN

NOTE: THIS DRAWING WAS CREATED FOR PRODUCTION ON 22" x 34" SHEET SIZE. DO NOT SCALE PRINTS.

DX SPLIT SYSTEM SCHEDULE

EVAPORATOR MARK	SERVICE	TOTAL AIRFLOW CFM	MINIMUM VENTILATION AIRFLOW CFM	OUTSIDE AIRFLOW %	EXT/ S.P. DROP IN.	COOLING CAPACITY DATA: ENTERING AIR °F DB	ENTERING AIR °F WB	LEAVING AIR °F DB	LEAVING AIR °F WB	TOTAL MBH	SENSIBLE MBH	EVAPORATOR ELECTRICAL DATA: HP	VOLTS	PH	BLOWER MOTOR (FLA)	ELECTRICAL HEAT DATA: HEATING CAPACITY KW	STAGES	VOLTS	PH
AHU-1	UP-FLOW	1,805	280	15.5	0.8	78.57	64.90	55.0	53.88	59.05	46.59	1	208	1	9.1	10	1	208	3
AHU-2	UP-FLOW	1,805	220	12.2	0.8	77.56	64.40	55.0	54.78	51.77	44.61	1	208	1	9.1	10	1	208	3

EVAPORATOR MARK	CIRCUIT #1 / #2 SERVICE CONNECTION: MCA	MOCP	UNIT WEIGHT (LBS)	EVAPORATOR MANUFACTURER AND MODEL NUMBER	AIR COOLED CONDENSER MARK	OUTDOOR AMBIENT TEMP. °F	CONDENSER ELECTRICAL DATA: VOLTS	PH	FLA (AMPS)	SINGLE POINT SERVICE CONNECTION: MCA	MOCP	HEAT PUMP MANUFACTURER AND MODEL NUMBER	ENERGY EFFICIENCY RATING SEER / EER	UNIT WEIGHT (LBS)
AHU-1	37	45	212	LENNOX CB-X-32-MV-060-208-6-01	HP-1	98	208	3	19.4	23.9	40	LENNOX SPB-060-H4S41Y	15.5 / 11.5	331
AHU-2	37	45	212	LENNOX CB-X-32-MV-060-208-6-01	HP-2	98	208	3	19.4	23.9	40	LENNOX SPB-060-H4S41Y	15.5 / 11.5	331

REMARKS:

1. PROVIDE A THE FOLLOWING LISTED EQUIPMENT FOR EACH SPLIT SYSTEM: SIDE RETURN UNIT STAND LENNOX MODEL# 45K32. SINGLE POINT ELECTRICAL SERVICE CONNECTIONS, R410A REFRIGERANT, MULTI-POSITION/VARIABLE SPEED INDOOR BLOWER MOTOR AND HEAT PUMP UNITS WITH COPELAND SCROLL ULTRA TECH TWO-STAGE COMPRESSORS WITH PART LOAD CAPABILITIES WITH MULTI-STAGE OPERATION, CRANKSCASE HEATER, ANTI-SHORT-CYCLE KIT, DEFROST CONTROL, SMARTHINGED- LOUVERED COIL PROTECTION AND RUBBER-IN-SHEAR COMPRESSOR ISOLATORS. EACH INDOOR UNIT SHALL BE EQUIPPED WITH EVAPORATOR VARIABLE-SPEED BLOWER MOTOR CONTROLED BY A BDC3 ELECTRONIC BLOWER CONTROL WITH AT LEAST FOUR RAMPING PROFILES TO CHOOSE FROM. PROVIDE CONTROLS INCLUDING LENNOX MANUFACTURED LN COMFORTSENSE 7000 L7742U PROGRAMMABLE THERMOSTAT FOR EACH UNIT WITH COMBINATION TEMPERATURE AND EDA DEHUMIDIFICATION SYSTEM CONTROL IN COOLING MODE AND AUTOCHANGE OVER. PROVIDE PLEATED MEDIA FILTERS IN A FABRICATED FILTER RACK, FLEXIBLE CONNECTIONS AT THE INLET AND DISCHARGE OF EACH UNIT.
2. CONTRACTOR SHALL FOLLOW MANUFACTURER'S RECOMMENDATIONS FOR REFRIGERANT LINE LENGTHS AND SIZES AND SLOPE. PROVIDE A HARD DRAWN TYPE "K" COPPER CONDENSATE DRAIN LINE TO FLOOR DRAINS OR FINAL LOCATION SHOWN ON PLANS.
3. CONTRACTOR SHALL PROVIDE AND INSTALL A SMOKE DETECTION SYSTEM WITH A SENSOR FOR EACH AIR HANDLER EXCEEDING 2000 CFM SUPPLY AIR. MOUNT DUCT MOUNTED SENSOR IN THE SUPPLY DUCT AND RETURN DUCT. INTERLOCK SMOKE DETECTION SHUT OFF DEVICE WITH THE AIR HANDLER FANS.
4. THE CONTRACTOR SHALL GUARANTEE ALL INSTALLED EQUIPMENT, MATERIAL, AND WORK INCLUDED IN THIS CONTRACT AGAINST ANY DEFECTS IN MATERIAL OR WORKMANSHIP; AND SHALL SATISFACTORILY CORRECT, AT NO COST TO THE STATE, ANY SUCH DEFECT THAT MAY BECOME APPARENT WITHIN A PERIOD OF ONE YEAR AFTER COMPLETION OF THE INSTALLATION. THE WARRANTY PERIOD SHALL COMMENCE ON THE DATE OF ACCEPTANCE OF THE CONTRACT BY THE STATE. A MANUFACTURER'S 4 YEAR EXTENDED COMPRESSOR WARRANTY (BEYOND THE INITIAL ONE YEAR PERIOD) SHALL BE INCLUDED WHEN OFFERED BY THE MANUFACTURER FOR ALL SIZES OF UNITARY AND SELF-CONTAINED DIRECT EXPANSION EQUIPMENT. INSURANCE POLICIES ARE NOT ACCEPTABLE.
5. ALL COMPONENTS OF EACH HVAC SYSTEM SHALL BE PRODUCTS OF THE SAME MANUFACTURER, AND SHALL BE PERFORMANCE MATCHED WITH PUBLISHED PERFORMANCE RATINGS. HVAC SYSTEMS WITH COMPONENTS FROM DIFFERENT MANUFACTURERS, EVEN SUBSIDIARIES OF THE SAME COMPANY, WILL NOT BE ACCEPTED.

DUCTLESS SPLIT SYSTEM

INDOOR UNIT:	
MARK	WIU-1
AREA SERVED	TELEPHONE/DATA ROOM
	ELECTRICAL ROOM
TYPE	HIGH WALL MOUNT
FILTERS	WASHABLE MESH
COOLING:	
COOLING NOMINAL TONS	1.0
COOLING AIR FLOW (CFM)	400
SEER	13.0
ELECTRIC HEAT (KW)	N/A
ELECTRICAL	
VOLTAGE / PHASE / FREQUENCY	208/1/60
MINIM CIRCUIT AMPACITY (MCA)	0.4
MAX OVERCURRENT DEVICE	15
MANUFACTURER	EMI
MODEL NUMBER	WLH12
OUTDOOR UNIT:	
MARK	WCU-1
ELECTRICAL	
VOLTAGE / PHASE	208/1/60
MINIMUM CIRCUIT AMPACITY (MCA	6.4
MAX OVERCURRENT DEVICE	15
MANUFACTURER	EMI
MODEL NO.	S1C2D

NOTES:

1 INTERNAL STATIC PRESSURE INCLUDES WET COOLING COIL AND FILTERS.
2 EXTERNAL STATIC PRESSURE INCLUDES DEVICES, COOLING COIL AND DUCTWORK. COOLING CAPACITIES, SEER'S, ARE COMBINATION RATINGS WITH OUTDOOR UNITS. CAPACITIES ARE RATED AT ENTERING AIR TEMPERATURE AND AMBIENT AS LISTED SEER'S ARE RATED AT ARI CONDITIONS.
3 SCHEDULED UNITS ARE MANUFACTURED BY EMI.
4 EACH OUTDOOR UNIT SHALL BE EQUIPPED WITH, LOW AMBIENT OPERATION DOWN TO, 32 DEGREES, COPPER/COPPER COILS, ANTI-SHORT CYCLE TIMER, SERVICE VALVES, INDOOR BLOWER RELAY KIT, FILTER DRIER AND CRANKCASE HEATER.
5 PROVIDE SINGLE POINT ELECTRICAL CONNECTION FOR EACH INDOOR UNIT.
6 EACH SYSTEM SHALL BE PROVIDED WITH A WALL MOUNTED THERMOSTAT 48" A.F.F.

ELECTRIC UNIT HEATER

UNIT	MODEL#	MANUFACTURER NAME	KW	VOLTS/ PHASE/HZ	INPUT AMPS	INSTALLATION DESCRIPTION
EUH-1	GRF1500	QMARK	1.5	120/1/60	12.5	WALL MOUNT

REMARKS:

1. MOUNT TOP OF HEATERS 48" A.F.F.
2. HEATER SHALL BE EQUIPPED WITH FACTORY INSTALLED THERMOSTAT.
3. HEATER SHALL BE HEAVY-GUAGE STEEL CONSTRUCTION.
4. MOTOR SHALL BE PERMANENTLY LUBRICATED WITH IMPEDANCE PROTECTION.
5. PROVIDE AND INSTALL A SURFACE MOUNT ACCESSORY KIT.

CEILING FAN HEATER

UNIT	MODEL#	MANUFACTURER NAME	KW	VOLTS/ PHASE/HZ	INPUT AMPS	INSTALLATION DESCRIPTION
EH-1	SK2008	STELPRO	2.0	208/1/60	10	CEILING
EH-2	SK2008	STELPRO	2.0	208/1/60	10	CEILING

REMARKS:

1. PROVIDE 60-MINUTE WALL TIMER MODEL#FD60MCW70 FACTORY ACCESOSORY. HEATER SHALL COME FROM THE FACTORY WITH A WHITE EPOXY-POLYESTER POWDERCOATED FINISH.
2. MOTOR SHALL BE PERMANENTLY LUBRICATED WITH THERMAL PROTECTION.
3. PROVIDE AND INSTALL A SURFACE MOUNTED ADAPTER KIT WHERE INSTALLED IN HARD CEILING AREAS AND A RECESSED T-BAR ADAPTER WHERE INSTALLED IN SUSPENDED CEILING AREAS.

INFRA-RED RADIANT HEATER SCHEDULE

MARK	MBTU	MANUFACTURER, MODEL/SIZE	DESCRIPTION
HTR-1	75	RE-VERBER-RAY, DX2 20-75	20FT LONG, INFRA-RED NATURAL GAS FIRED TUBE HEATER DX SERIES WITH A 75,000 BTUH. INPUT RATING. THE EMITTER & COMBUSTION CHAMBER ARE ALUMINIZED STEEL 16 GAGE 4" O.D. CONSTRUCTION AND COATED WITH A HIGH TEMPERATURE CORROSION RESISTANT COATING. THE POWER SUPPLY IS 120V, 3-WIRE SYSTEM. THE BURNER SHALL BE CONTROLLED WITH A 100% SAFETY SHUT-OFF SYSTEM WITH DUAL DIFFERENTIAL PRESSURE SWITCHES AND A SILICON CARBIDE HOT SURFACE IGNITOR.
HTR-2	75	RE-VERBER-RAY, DX2 20-75	20FT LONG, INFRA-RED NATURAL GAS FIRED TUBE HEATER DX SERIES WITH A 75,000 BTUH. INPUT RATING. THE EMITTER & COMBUSTION CHAMBER ARE ALUMINIZED STEEL 16 GAGE 4" O.D. CONSTRUCTION AND COATED WITH A HIGH TEMPERATURE CORROSION RESISTANT COATING. THE POWER SUPPLY IS 120V, 3-WIRE SYSTEM. THE BURNER SHALL BE CONTROLLED WITH A 100% SAFETY SHUT-OFF SYSTEM WITH DUAL DIFFERENTIAL PRESSURE SWITCHES AND A SILICON CARBIDE HOT SURFACE IGNITOR.
HTR-3	100	RE-VERBER-RAY, DX2 20-100	20FT LONG, INFRA-RED NATURAL GAS FIRED TUBE HEATER DX SERIES WITH A 100,000 BTUH. INPUT RATING. THE EMITTER & COMBUSTION CHAMBER ARE ALUMINIZED STEEL 16 GAGE 4" O.D. CONSTRUCTION AND COATED WITH A HIGH TEMPERATURE CORROSION RESISTANT COATING. THE POWER SUPPLY IS 120V, 3-WIRE SYSTEM. THE BURNER SHALL BE CONTROLLED WITH A 100% SAFETY SHUT-OFF SYSTEM WITH DUAL DIFFERENTIAL PRESSURE SWITCHES AND A SILICON CARBIDE HOT SURFACE IGNITOR.
(T-L)	---	COLUMBUS, S2022-11	120V SINGLE STAGE ELECTRIC THERMOSTAT WITH A CONTROL TEMPERATURE RANGE FROM 40° TO 80° F. HOUSED IN A WHITE PLASTIC COVER WITH DIAL ADJUSTMENT. THERMOSTAT SHALL BE CAPABLE OF CONTROLLING UP TO 4 INFRARED TUBE HEATERS.

NOTE: SUPPLY AND INSTALL AN 8" DIRT LEG AND A POINT OF USE GAS COCK WITH A SIDE PRESSURE TAP FOR EACH HEATER. REFER TO INFRARED HEATER DETAILS.

CADFILE: T:\MNTFMD02FTWCBC4704-00-837\02-77-470400837\Acad\prototypical pdfs\edcouch\Acad\MEP\MECH\M4_1.dwg Plotted: Fri. Aug. 07, 2009 @ 11:36 AM By: MBAZAN

Texas Department of Transportation
125 E. 11th Street
Austin, Texas 78701-2483
(512) 416-3048
Copyright © 2005 Texas Department of Transportation

THIS DOCUMENT IS RELEASED FOR THE PURPOSE OF
INFORMATION ONLY
NOT FOR REGULATORY
APPROVAL, PERMITTING,
OR CONSTRUCTION.

EDCOUCH
MAINTENANCE FACILITY
HIDALGO COUNTY, EDCOUCH TEXAS
PHARR DISTRICT

Revisions

Drawn by: CON

Project No.

Date 05-26-2009

Sheet No.

M4.1

of 5M sheets

MECHANICAL SCHEDULES - 1

NOTE: THIS DRAWING WAS CREATED FOR PRODUCTION ON 22" x 34" SHEET SIZE. DO NOT SCALE PRINTS.

DIFFUSER / GRILLE SCHEDULE

MARK	MANUFACTURER, MODEL/SIZE	DESCRIPTION
S12	MANUFACTURED BY TITUS TMS-AA-12-24X24-3-26-EG-IB-D75	FULL FACE T-BAR LAY-IN STYLE SQUARE CEILING DIFFUSER. ALL ALUMINUM CONSTRUCTION WITH FACTORY WHITE FINISH, WITH REMOVABLE 3-CONE INNER ASSEMBLIES; REMOVABLE BUTTON PLUG FOR ACCESS TO DAMPER OPERATOR AFTER INSTALLATION. INTEGRAL OPPOSED BLADE DAMPER COMPLETE WITH ROUND EQUALIZING GRID AND FACTORY INSTALLED ½" THICK FOIL BACKED INSULATION.
S10	MANUFACTURED BY TITUS TMS-AA-10-24X24-3-26-EG-IB-D75	
S8	MANUFACTURED BY TITUS TMS-AA-8-24X24-3-26-EG-IB-D75	
S6	MANUFACTURED BY TITUS TMS-AA-6-24X24-3-26-EG-IB-D75	
RP	MANUFACTURED BY TITUS 50F-24X24-3-26-A	T-BAR LAY-IN STYLE 24" x 24" SQUARE 1/2" x 1/2" x 1/2" EGGCRATE CORE CEILING RETURN GRILLE. ALL ALUMINUM CONSTRUCTION WITH FACTORY WHITE FINISH.
SBJ	MANUFACTURED BY TITUS 272FS-6X6-1 WITH ALUMINUM OPPOSED-BLADE DAMPER	AEROBLADE SIDE WALL DOUBLE DEFLECTION SUPPLY GRILLE WITH 3/4" BLADE SPACING WITH THE FRONT BLADES PERPENDICULAR TO THE LONG DIMENSION. SURFACE MOUNT STYLE, ALL ALUMINUM CONSTRUCTION WITH #20 CUSTOM ENVIRO-THERM FINISH.
ESG	MANUFACTURED BY TITUS 56FS-XX/XX-1 REFER TO PLAN FOR SIZES	AEROBLADE SIDE WALL FIXED DEFLECTION EXHAUST AND RETURN GRILLE WITH 3/4" BLADE SPACING WITH THE FRONT BLADES PERPENDICULAR TO THE LONG DIMENSION. SURFACE MOUNT STYLE, ALL ALUMINUM CONSTRUCTION WITH FACTORY WHITE FINISH. TRANSISTION DUCT TO FIT GRILLE.
E	MANUFACTURED BY TITUS 50F-24X24-3-26-A	T-BAR LAY-IN STYLE 24" x 24" SQUARE 1/2" x 1/2" x 1/2" EGGCRATE CORE CEILING EXHAUST AND RETURN GRILLE. ALL ALUMINUM CONSTRUCTION WITH FACTORY WHITE FINISH. TRANSISTION DUCT TO FIT GRILLE.
EG	MANUFACTURED BY TITUS 50F-F-24X24-1-26-A	SURFACE MOUNT STYLE 24" x 24" SQUARE 1/2" x 1/2" x 1/2" EGGCRATE CORE CEILING EXHAUST GRILLE WITH FILTER FRAME. ALL ALUMINUM CONSTRUCTION WITH FACTORY WHITE FINISH. TRANSISTION DUCT TO FIT GRILLE.

NOTE: DO NOT USE INTEGRAL OPPOSED BLADE DAMPERS IN GRILLES FOR BALANCING. UNLESS NOTED OTHERWISE. SUPPORT ALL T-BAR LAY IN GRILLES AT ALL FOUR CORNERS. SUPPORT ALL FLUSH MOUNT SIDEWALL REGISTERS, GRILLES AND ACCESS DOORS ON ALL FOUR SIDES BY PROVIDING BLOCKING IN FRAMING.

EXHAUST FAN SCHEDULE

UNIT	MODEL#	MNFCTR. NAME	EXHST. FAN DESCRIPTION	DESIGN EXHAUST (CFM)	EXHAUST CFM/@ IN. W.G. ΔP	MOTOR RPM	INPUT HP (AMPS)	SONES	VOLTS/ PHASE/HZ	DRIVE	INSTALLATION DESCRIPTION	ROOF CURB (WALLFLANGE) SIZE	ROOF CURB HEIGHT IN.	DUCT/DAMPER INLET SIZE WXH (IN.)	COMMENTS
EF-1	100SQN12D	COOK	IN-LINE	450	550/0.5	1,500	1/6	N/A	120/1/60	DIRECT	SUSPENDED	N/A	N/A	12 X 12	PROVIDE SIDE DISCHARGE 14 1/8 x 8 15/16
EF-2	165SQN10D	COOK	IN-LINE	2,100	2,594/0.25	1,114	1/2	N/A	120/1/60	DIRECT	SUSPENDED	N/A	N/A	22 X 22	PROVIDE SIDE DISCHARGE 19 1/8 x 18 1/8
EF-3	150SQN17D	COOK	IN-LINE	2,800	3,242/0.25	1,725	1	N/A	120/1/60	DIRECT	SUSPENDED	N/A	N/A	20 X 20	PROVIDE SIDE DISCHARGE 15 15/16 x 16 1/8
EF-4	24SP10D	COOK	PAC-FAN	5,000	5,429/0.125	950	1/2	14.0	120/1/60	DIRECT	WALL MOUNT	N/A	N/A	N/A	WALL OPENING 31 1/4 SUPPORT WITH HANGING RODS IN AND WALL SUPPORTS
EF-5	10SP15D	COOK	PAC-FAN	250	263/0.125	1,150	1/25	3.8	120/1/60	DIRECT	WALL MOUNT	N/A	N/A	N/A	WALL OPENING 17 1/4 SUPPORT WITH HANGING RODS IN AND WALL SUPPORTS
EF-6	70SQN15D	COOK	IN-LINE	125	149/0.25	1,656	1/20	N/A	120/1/60	DIRECT	SUSPENDED	N/A	N/A	10 X 10	PROVIDE SIDE DISCHARGE 6 1/8 x 6 15/16
EF-7	ACRUD-165R11D-W	COOK	UPBLAST	2,800	2,894/0.25	1,140	3/4	16.9	120/1/60	DIRECT	WALL MOUNT	PROVIDE ALUMINUM HEAVY GAUGE INSULATED NON-VENTED THRU WALL WALL MOUNT CURB. FAN MOTOR SHALL BE EXPLOSION PROF FAN HOUSING SHALL HAVE FACTORY SPARK REISTANT COATING			
EF-V	DUAL CO-X	CAR-MON	VEHICLE	600	600/3.00	N/A	3/4	N/A	120/1/60	DIRECT	BEAM MOUNT	N/A	N/A	N/A	

REMARKS:

1. EF-1, INTERLOCK EXHAUST FAN WITH RESTROOM LIGHT SWITCHES. (SEE ELECTRICAL).
2. EF-4, EF-5 PROVIDE A PACKAGED FAN INCLUDING GALVANIZED STEEL ENCLOSURE, WHEATHER RESISTANT SHUTTER, WALL FLANGE, GALVANIZED BIRD SCREEN, AND WEATHER HOOD.
3. EF-V, VEHICLE EXHAUST PACKAGE, WITH SPRING ASSIST BALANCERS AND SLINGS, TWO 5" TYPE CLX HIGH TEMPERATURE TUBING, 30 FEET EACH, EPDM EXHAUST PIPE ADAPTERS CAR-MON SERIES CWM-9 FAN. ASSEMBLY SHALL BE SUITABLE FOR SIDE WALL MOUNTING AND SHALL BE MOUNTED PER MANUFACTURERS RECOMMENDATIONS. DUCT EXHAUST TO SCHEDULED LOUVER.
4. EF-5 PROVIDE 120V THERMOSTAT CONTROL, FAN SHALL RUN CONTINUOUSLY UNLESS FREEZING CONDITIONS OCCUR, THERMOSTAT SHALL TURN OFF FAN AT TEMPERATURES BELOW 45 DEGREES FAHRENHEIT.
5. PROVIDE SPEED CONTROLLERS ON ALL EXHAUST FANS EXCEPT EF-V AND EF-3. ALL FANS SHALL BE RUNNING WHILE PERFORMING TESTING AND AIR BALANCING MEASUREMENTS.

AIR INTAKE / RELIEF GRAVITY HOOD AND LOUVER SCHEDULE

MARK	MANUFACTURER, MODEL/SIZE	DESCRIPTION
LD-1	MANUFACTURED BY RUSKIN ELF375DXH & CBD4 SIZE: 72 in. W x 36 in. H REFER TO FLOOR PLAN FOR QUANTITIES	FLANGELESS EXTRUDED ALUMINUM STATIONARY INTAKE LOUVER AND VERTICAL MOUNT HORIZONTAL INTAKE AIRFLOW FLANGLESS COUNTERBALANCED BACKDRAFT DAMPER IN BUILDING EXTERIOR WALL. LOUVER SHALL BE CONSTRUCTED FROM 1/8" NOMINAL WALL THICKNESS WITH FACTORY APPLIED NON-STANDARD, NON-EXOTIC CUSTUM COLOR SELECTED BY ARCHITECT, WITH A FREE AREA EQUAL TO 54% WITH RATED BEGINING POINT OF WATER PENETRATION 0.01 OZ./SQ. FT AT 873 FPM. PROVIDE EXPANDED ALUMINUM BIRDSCREEN AND STAINLESS STEEL INSECT SCREEN. DAMPER BLADES SHALL START TO OPEN AT 0.02 IN. W.G. ΔP AND FULLY OPENED AT 0.05 IN. W.G. ΔP.
LD-2	MANUFACTURED BY RUSKIN ELF375DXH & CBD4 SIZE: 12 in. W x 12 in. H REFER TO FLOOR PLAN FOR QUANTITIES	FLANGELESS EXTRUDED ALUMINUM STATIONARY INTAKE LOUVER AND VERTICAL MOUNT HORIZONTAL INTAKE AIRFLOW FLANGLESS COUNTERBALANCED BACKDRAFT DAMPER IN BUILDING EXTERIOR WALL. LOUVER SHALL BE CONSTRUCTED FROM 1/8" NOMINAL WALL THICKNESS WITH FACTORY APPLIED NON-STANDARD, NON-EXOTIC CUSTUM COLOR SELECTED BY ARCHITECT, WITH A FREE AREA EQUAL TO 54% WITH RATED BEGINING POINT OF WATER PENETRATION 0.01 OZ./SQ. FT AT 873 FPM. PROVIDE EXPANDED ALUMINUM BIRDSCREEN AND STAINLESS STEEL INSECT SCREEN. DAMPER BLADES SHALL START TO OPEN AT 0.02 IN. W.G. ΔP AND FULLY OPENED AT 0.05 IN. W.G. ΔP.
LD-3	MANUFACTURED BY RUSKIN ELF375DXH & BD2/A2 SIZE: 18 in. W x 18 in. H REFER TO FLOOR PLAN FOR QUANTITIES	FLANGELESS EXTRUDED ALUMINUM STATIONARY EXHAUST LOUVER AND VERTICAL MOUNT HORIZONTAL EXHAUST AIRFLOW FLANGLESS BACKDRAFT DAMPER IN BUILDING EXTERIOR WALL. LOUVER SHALL BE CONSTRUCTED FROM 1/8" NOMINAL WALL THICKNESS WITH FACTORY APPLIED NON-STANDARD, NON-EXOTIC CUSTUM COLOR SELECTED BY ARCHITECT, WITH A FREE AREA EQUAL TO 54% WITH RATED BEGINING POINT OF WATER PENETRATION 0.01 OZ./SQ. FT AT 873 FPM. PROVIDE EXPANDED ALUMINUM BIRDSCREEN AND STAINLESS STEEL INSECT SCREEN. DAMPER BLADES SHALL START TO OPEN AT 0.10 IN. W.G. ΔP AND FULLY OPENED AT 0.15 IN. W.G. ΔP.
LD-4	MANUFACTURED BY RUSKIN ELF375DXH & BD2/A2 SIZE: 30 in. W x 30 in. H REFER TO FLOOR PLAN FOR QUANTITIES	FLANGELESS EXTRUDED ALUMINUM STATIONARY EXHAUST LOUVER AND VERTICAL MOUNT HORIZONTAL EXHAUST AIRFLOW FLANGLESS BACKDRAFT DAMPER IN BUILDING EXTERIOR WALL. LOUVER SHALL BE CONSTRUCTED FROM 1/8" NOMINAL WALL THICKNESS WITH FACTORY APPLIED NON-STANDARD, NON-EXOTIC CUSTUM COLOR SELECTED BY ARCHITECT, WITH A FREE AREA EQUAL TO 54% WITH RATED BEGINING POINT OF WATER PENETRATION 0.01 OZ./SQ. FT AT 873 FPM. PROVIDE EXPANDED ALUMINUM BIRDSCREEN AND STAINLESS STEEL INSECT SCREEN. DAMPER BLADES SHALL START TO OPEN AT 0.10 IN. W.G. ΔP AND FULLY OPENED AT 0.15 IN. W.G. ΔP.
LD-5	MANUFACTURED BY RUSKIN ELF375DXH & CBD4 SIZE: 36 in. W x 36 in. H REFER TO FLOOR PLAN FOR QUANTITIES	FLANGELESS EXTRUDED ALUMINUM STATIONARY INTAKE LOUVER AND VERTICAL MOUNT HORIZONTAL INTAKE AIRFLOW FLANGLESS COUNTERBALANCED BACKDRAFT DAMPER IN BUILDING EXTERIOR WALL. LOUVER SHALL BE CONSTRUCTED FROM 1/8" NOMINAL WALL THICKNESS WITH FACTORY APPLIED NON-STANDARD, NON-EXOTIC CUSTUM COLOR SELECTED BY ARCHITECT, WITH A FREE AREA EQUAL TO 54% WITH RATED BEGINING POINT OF WATER PENETRATION 0.01 OZ./SQ. FT AT 873 FPM. PROVIDE EXPANDED ALUMINUM BIRDSCREEN AND STAINLESS STEEL INSECT SCREEN. DAMPER BLADES SHALL START TO OPEN AT 0.02 IN. W.G. ΔP AND FULLY OPENED AT 0.05 IN. W.G. ΔP.
LD-6	MANUFACTURED BY RUSKIN ELF375DXH & CBD4 SIZE: 24 in. W x 18 in. H REFER TO FLOOR PLAN FOR QUANTITIES	FLANGELESS EXTRUDED ALUMINUM STATIONARY INTAKE LOUVER AND VERTICAL MOUNT HORIZONTAL INTAKE AIRFLOW FLANGLESS COUNTERBALANCED BACKDRAFT DAMPER IN BUILDING EXTERIOR WALL. LOUVER SHALL BE CONSTRUCTED FROM 1/8" NOMINAL WALL THICKNESS WITH FACTORY APPLIED NON-STANDARD, NON-EXOTIC CUSTUM COLOR SELECTED BY ARCHITECT, WITH A FREE AREA EQUAL TO 54% WITH RATED BEGINING POINT OF WATER PENETRATION 0.01 OZ./SQ. FT AT 873 FPM. PROVIDE EXPANDED ALUMINUM BIRDSCREEN AND STAINLESS STEEL INSECT SCREEN. DAMPER BLADES SHALL START TO OPEN AT 0.02 IN. W.G. ΔP AND FULLY OPENED AT 0.05 IN. W.G. ΔP.
LD-7	MANUFACTURED BY RUSKIN ELF375DXH & CBD4 SIZE: 42 in. W x 42 in. H REFER TO FLOOR PLAN FOR QUANTITIES	FLANGELESS EXTRUDED ALUMINUM STATIONARY INTAKE LOUVER AND VERTICAL MOUNT HORIZONTAL INTAKE AIRFLOW FLANGLESS COUNTERBALANCED BACKDRAFT DAMPER IN BUILDING EXTERIOR WALL. LOUVER SHALL BE CONSTRUCTED FROM 1/8" NOMINAL WALL THICKNESS WITH FACTORY APPLIED NON-STANDARD, NON-EXOTIC CUSTUM COLOR SELECTED BY ARCHITECT, WITH A FREE AREA EQUAL TO 54% WITH RATED BEGINING POINT OF WATER PENETRATION 0.01 OZ./SQ. FT AT 873 FPM. PROVIDE EXPANDED ALUMINUM BIRDSCREEN AND STAINLESS STEEL INSECT SCREEN. DAMPER BLADES SHALL START TO OPEN AT 0.02 IN. W.G. ΔP AND FULLY OPENED AT 0.05 IN. W.G. ΔP.
L-WB	MANUFACTURED BY RUSKIN ELF375DXH SIZE: 24 in. W x 30 in. H REFER TO FLOOR PLAN FOR QUANTITIES	FLANGELESS EXTRUDED ALUMINUM STATIONARY INTAKE LOUVER IN BUILDING EXTERIOR WALL. LOUVER SHALL BE CONSTRUCTED FROM 1/8" NOMINAL WALL THICKNESS WITH FACTORY APPLIED NON-STANDARD, NON-EXOTIC CUSTUM COLOR SELECTED BY ARCHITECT, WITH A FREE AREA EQUAL TO 54% WITH RATED BEGINING POINT OF WATER PENETRATION 0.01 OZ./SQ. FT AT 873 FPM. PROVIDE EXPANDED ALUMINUM BIRDSCREEN AND STAINLESS STEEL INSECT SCREEN.

Texas Department of Transportation
125 E. 11th Street
Austin, Texas 78701-2483
(512) 416-2000
Copyright © 2005 Texas Department of Transportation

THIS DOCUMENT IS RELEASED FOR THE PURPOSE OF
INFORMATION ONLY
NOT FOR REGULATORY
APPROVAL, PERMITTING,
OR CONSTRUCTION.

EDCOUCH
MAINTENANCE FACILITY
HIDALGO COUNTY, EDCOUCH TEXAS
PHARR DISTRICT

Revisions

Drawn by:
CON
Project No.

Date
05-26-2009
Sheet No.

M4.2
of 5M sheets

NOTE: THIS DRAWING WAS CREATED FOR PRODUCTION ON 22" x 34" SHEET SIZE. DO NOT SCALE PRINTS.

CADFILE: T:\MNTFM\D25FTW\C82\4704-02-837\02-77-4704D837\Acad\prototypical pdf\Autocad\Acad\MEP\MECHM4_1.dwg Plotted: Fri, Aug. 07, 2009 @ 11:39 AM By: MBAZAN

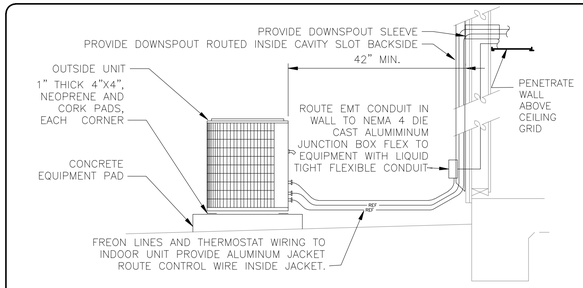

1 HEAT PUMP/CONDENSING UNIT REFRIGERANT LINES ABOVE GROUND

SCALE: NOT TO SCALE

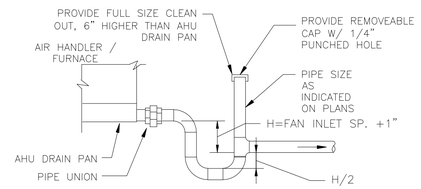

2 CONDENSATE P-TRAP (DRAW-THRU AIR HANDLER)

SCALE: NOT TO SCALE

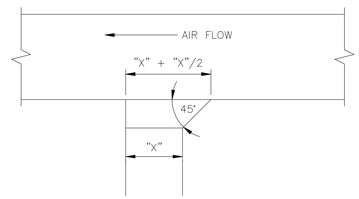

3 RECTANGULAR DUCT BOOT TAP

SCALE: NOT TO SCALE

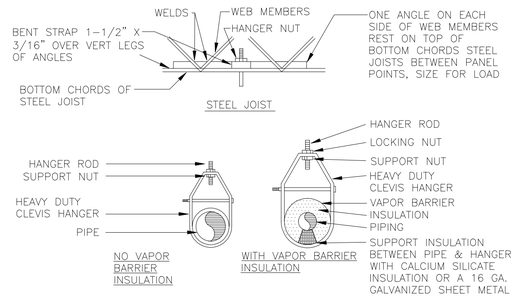

4 CLEVIS HANGERS

SCALE: NOT TO SCALE

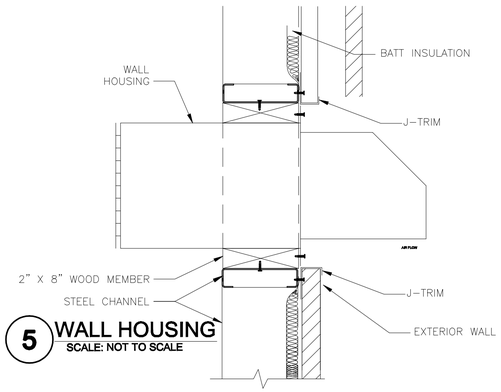

5 WALL HOUSING

SCALE: NOT TO SCALE

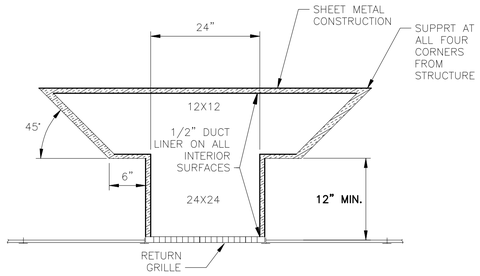

6 RETURN GRILLE SOUND BOX (SECTION CUT)

SCALE: NOT TO SCALE

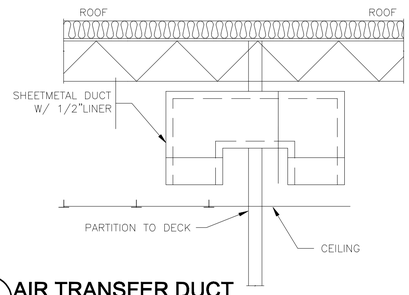

7 AIR TRANSFER DUCT

SCALE: NOT TO SCALE

Texas Department of Transportation
125 E. 11th Street
Austin, Texas 78701-2483
(512) 416-2000
Copyright © 2005 Texas Department of Transportation

THIS DOCUMENT IS RELEASED FOR THE PURPOSE OF
INFORMATION ONLY
NOT FOR REGULATORY
APPROVAL, PERMITTING,
OR CONSTRUCTION.

EDCOUCH
MAINTENANCE FACILITY
HIDALGO COUNTY, EDCOUCH TEXAS
PHARR DISTRICT

Revisions

Drawn by:
CON

Project No.

Date
05-26-2009

Sheet No.

M5.1

of 5M sheets

MECHANICAL DETAILS

NOTE: THIS DRAWING WAS CREATED FOR PRODUCTION ON 22" x 34" SHEET SIZE. DO NOT SCALE PRINTS.

CADFILE: T:\MNTFM\D20\FTWC\SC-0704-00-437\02-77-0704009371\workfiles\prototype\sheet plots\Autocount\Acad\MEP\MECH-NMS_1.dwg Plotted: Fri, Aug. 07, 2009 @ 11:39 AM By: MBAZAN

ELECTRICAL SYMBOLS LEGEND

- CEILING MOUNTED LARGE ROOM PASSIVE INFRARED MOTION SENSOR.
- CEILING MOUNTED TWO-WAY CORRIDOR PASSIVE INFRARED MOTION SENSOR.
- SP — MOUNTED ABOVE CEILING HEAVY DUTY SWITCHPACK, 20 AMPS @ 120VAC BALLAST.
- PIR — PASSIVE INRARED WALL SWITCH, 6.7 AMPS @ 120VAC BALLAST.
- PIR DL — PASSIVE INRARED WALL SWITCH WITH CONTROL FOR TWO SEPARATE LOADS. RATED AT 6.7 AMPS @ 120VAC BALLAST.
- $ — WALL SWITCH
- $3 — 3-WAY WALL SWITCH
- $4 — 4-WAY WALL SWITCH
- $M — MANUAL MOTOR STARTER
- $T — INTERMATIC EI205 ELECTRONIC IN-WALL COUNTDOWN TIMER SWITCH, 5-15-30-60 MINUTE TIME RANGES 15 AMP @ 1000VA BALLAST.
- LIGHT FIXTURE
- EXIT SIGN
- EMERGENCY LIGHTING FIXTURE
- DUPLEX RECEPTACLE
- DOUBLE DUPLEX (QUAD) RECEPTACLE
- ISOLATED GROUND (IG) DUPLEX RECEPTACLE
- R — 208/240V RECEPTACLE-RATING AS SHOWN
- DISCONNECT SWITCH
- X — FULL VOLTAGE NON-REVERSING FUSIBLE DISCONNECT SWITCH TYPE COMBINATION STARTER X= NEMA SIZE
- X — FULL VOLTAGE NON-REVERSING CONTACTOR AND STARTER X= NEMA SIZE
- LC — LIGHTING CONTACTOR
- MC — MULTIPOLE CONTACTOR
- T — FLOOR MOUNTED TRANSFORMER
- TC — TIME CLOCK
- R — RELAY
- HOA — HAND OF AUTO SELECTOR SWITCH
- DISTRIBUTION PANEL OR SWITCHBOARD
- PANELBOARD
- J — JUNCTION BOX
- 120V 1PH CONNECTION
- 208V 1PH CONNECTION
- 208V 3PH CONNECTION
- 240V 1PH CONNECTION
- 240V 3PH CONNECTION
- 277V 1PH CONNECTION
- 480V 3PH CONNECTION
- PC — PHOTO - CELL

- PP — MODULAR FURNITURE POWER POLE
- FPP — ELECTRICAL CONTRACTOR PROVIDED FREE STANDNING POWER POLE WITH TWO RECESSED RECEPTACLES AND STANDARD 2-VOICE, 2-DATA OUTLET
- VOICE ONLY
- STANDARD 2-VOICE, 2-DATA
- DATA LINE ONLY

BRANCH CIRCUIT & WIRE NOTATION

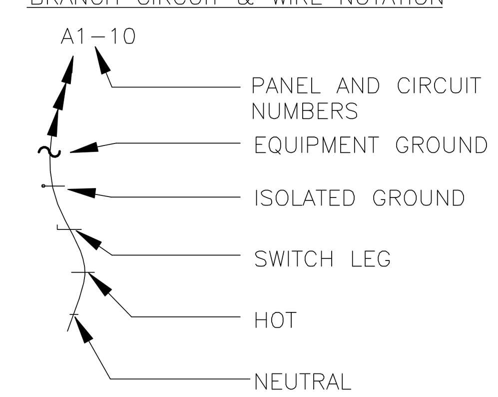

LISTED ABBREVIATIONS

BOF	BOTTOM OF FIXTURE
GFI	GROUND FAULT INTERUPT
WP	WEATHERPROOF DEVICE OR ENCLOSURE
RGS	RIGID GALVANIZED STEEL CONDUIT
PVC	POLY VINYL CLORIDE CONDUIT
EMT	ELECTRICAL METALIC TUBING CONDUIT
AFR	ABOVE FINISHED ROOF
AFF	ABOVE FINISHED FLOOR
BFG	BELOW FINSIHED GRADE
AFG	ABOVE FINISHED GRADE
SCH.	SCHEDULE

- —— UGE —— UNDERGROUND ELECTRICAL
- —— UVD —— UNDERGROUND VOICE DATA
- —— UGT —— UNDERGROUND TELEPHONE SERVICE

TVSS/1 — TRANSIENT VOLTAGE SURGE SUPPRESSOR: DITEK MODEL DTGX-120-208-3Y, 200,000 AMP RATED PER PHASE W/ FILTER, UL 1449 LISTED, 7-MODE PROTECTION, 5 nSEC RESPONSE HARDWIRED TO NEW, 3 POLE, 30 AMP CIRCUIT BREAKER IN PANEL.

TVSS/2 — TRANSIENT VOLTAGE SURGE SUPPRESSOR: DITEK MODEL DTG-120-208-3Y, 100,000 AMP RATED PER LEG WITH FILTER, UL 1449 LISTED, 7-MODE PROTECTION, MCOV 115% OF NOMINAL LINE VOLTAGE, HARDWIRED TO 3-POLE, 30 AMP. CIRCUIT BREAKER IN PANEL.

KEYED NOTES -

1. EXTERIOR LIGHTING ROUTED THROUGH PHOTO CELL WITH HAND OFF AUTO CONTROL.
2. COORDINATE LIGHT FIXTURES WITH TRADES. PROVIDE ALL NECESSARY HARDWARE TO SUSPEND LIGHT FIXTURES WITH UNISTRUT. MOUNT BOTTOM OF FIXTURES 8FT A.F.F.
3. COORDINATE LIGHT FIXTURES WITH TRADES. PROVIDE ALL NECESSARY HARDWARE TO SUSPEND LIGHT FIXTURES WITH MOUNTING HARDWARE AS REQUIRED. MOUNT BOTTOM OF FIXTURES 22FT A.F.F.
4. COORDINATE LIGHT FIXTURES WITH TRADES. PROVIDE ALL NECESSARY HARDWARE TO SUSPEND LIGHT FIXTURES WITH MOUNTING HARDWARE AS REQUIRED. MOUNT BOTTOM OF FIXTURES 15FT A.F.F.
5. UNSWITCHED NIGHT LIGHT.
6. SEE ARCHITECTURAL EXTERIOR ELEVATIONS FOR MOUNTING HEIGHT OF TYPE "M" FIXTURES.
7. PASSIVE INFRARED DUAL LEVEL WALL SWITCH. ONE SWITCH SWITCHES OUTSIDE LAMPS IN EACH FIXTURE. SECOND SWITCH SWITCHES INSIDE LAMPS IN EACH FIXTURE.
8. PASSIVE INFRARED WALL SWITCH.
9. CEILING MOUNTED PASSIVE INFRARED SWITCH PACK AND OCCUPANCY SENSORS, TOGGLE WALL SWICHES SHALL INTERRUPT POWER FROM SWITCH PACK TO LIGHT FIXTURES.
10. PROVIDE CONTINUOUS POWER TO BATTERY PACK, SWITCH LIGHT ONLY.
11. INSTALL CONDUIT ABOVE AND AROUND CASED DOOR OPENINGS. ROUTE SO THAT CONDUIT WILL NOT INTERFERE WITH FUTURE OVERHEAD DOOR AND ELECTRIC DOOR OPERATOR INSTALLATIONS.
12. ROUTE ALL CONDUITS EXPOSED WITH SURFACED MOUNTED EQUIPMENT AND DEVICES INSIDE BUILDING EQUIPMENT RECYCLING ROOM AND WASHBAY. DO NOT ROUTE CONDUIT OUTSIDE OF BUILDING. ALL CONDUITS INSIDE EQUIPMENT RECYCLE ROOM AND INSIDE WASHBAY SHALL BE RGS. SURFACE MOUNT ALL DEVICES, EQUIPMENT, AND FIXTURE BOXES ON INTERIOR WALLS. PROVIDE WEATHER PROOF TYPE BOXES, COVERS, AND NEMA 3R ENCLOSURES FOR ALL RECEPTACLES, LIGHTS, AND ELECTRICAL EQUIPMENT INSTALLED IN RECYCLING ROOM AND WASHBAY.
13. ROUTE CONDUIT TO EQUIPMENT OVERHEAD DROP DOWN TO EQUIPMENT.
14. INTERLOCK INTERMATIC ELECTRONIC IN-WALL COUNTDOWN TIMER SWITCHS WITH ROOM LIGHTS WITH ONE RELAY PER TIMER SWITCH. LIGHTS SHALL TURN ON IF ANY ONE OF THE TIMER SWITCHES IS IN THE "ON" POSITION.
15. PROVIDE A 1/2 EMT RACEWAY TO ABOVE CEILING FOR THERMOSTAT CONTROL WIRING, COORDINATE FINAL LOCATION WITH MECHANICAL CONTRACTOR.
16. STUB OUT 2 - 4" CONDUIT WITH PULL STRING TO PULL BOX FOR FUTURE IRRIGATION SYSTEM. FINAL LOCATION SHALL BE DETERMINED BY LANDSCAPE ARCHITECT.
17. 2 - 4" PVC SCHED. 40. ONE W/100 PAIR VOICE DATA CABLE. SPARE W/2 PULL WIRES STUB UP IN TELECOMMUNICATION ROOM. COORDINATE WITH TELEPHONE COMPANY. REFER TO ELECTRICAL SITE PLAN FOR CONTINUATION. PROVIDE PROTECTIVE CONNECTORS AND BUSHINGS AT END OF CONDUITS STUBBED INTO VOICE DATA ROOM.
18. PROVIDE NEWTON FIG. 3058 GROUND BUS BAR WITH 1-6AWG ISOLATED GROUND IN A 3/4" CONDUIT TO MAIN SERVICE ENTRANCE GROUNDING POINT. PROVIDE AND INSTALL DATA RACK REFER TO SPECIFICATIONS. PROVIDE AND INSTALL PUNCH BLOCKS AND WIRE MANAGEMENT SPOOLS BENEATH PUNCH BLOCKS. PUNCH BLOCKS SHALL BE COLOR CODED PER SPECIFICATION. MANUFACTURER COLORED PUNCH BLOCKS ARE ACCEPTABLE.
19. PROVIDE AND RIGID MOUNT BACKBOARD, BACKBOARD SHALL BE A FULL SHEET OF PLYWOOD, CDX CONSTRUCTION GRADE AND OR BETTER. INSTALL WITH SMOOTH SIDE EXPOSED, 8FT LENGTH IN THE HORIZONTAL POSITION, WITH TOP OF PLYWOOD 6" TO 8" BELOW THE CEILING. BACKBOARD SHALL BE CAPABLE OF SUPPORTING 200 LBS OF DEAD WEIGHT. PRIOR TO BACKBOARD INSTALLATION, CONTRACTOR SHALL PAINT ALL SURFACES WITH FIRE RETARDANT WHITE PAINT. ALL DAMAGED SURFACES AFTER INSTALLATION SHALL BE REPAINTED. EXPOSED SURFACE SHALL BE FREE OF SIGNIFICANT VOIDS, CRACKS, AND BLEMISHES.
20. SEE FUEL STATION DRAWINGS FOR NUMBER OF CONDUITS, WIRES, SIZES AND CONTINUATION
21. EMERGENCY GENERATOR ANNUNCIATOR PANEL. PROVIDE#12 THHN/THWN WIRE IN CONDUIT TO GENERATOR CONTROL PANEL. ADJUST QUANTITY AS REQUIRED FOR PANEL ACTUALLY SUPPLIED. SURFACE MOUNT ON TOP OF AUTOMATIC TRANSFER SWITCH.
22. FLUSH MOUNTED 4" X 4" J-BOX WITH BLANK COVER AND 1 " CONDUIT TO ABOVE CEILING FOR FUTURE SECURITY DEVICE. MOUNT AT 48" AFF. PROVIDE AND INSTALL MATCHING FLUSH RING PER SECURITY DEVICE REFER TO OWNER.
23. INTERLOCK EXHAUST FAN WITH THE MENS AND WOMENS LIGHT SWITCHES WITH ONE RELAY PER LIGHT SWITCH. EXHAUST FAN SHALL RUN IF ANY ONE OF THE LIGHT SWITCH IS IN THE "ON" POSITION.
24. VERIFY LOCATION OF POWER POLES (PP) WITH OWNER. REFER TO MODULAR FURNITURE WIRE STANDARD THIS SHEET INSTALL ONE STANDARD VOICE/DATA OUTLET/PER CUBICLE. VERIFY QUANTITY AND LOCATION OF FURNITURE WITH OWNER.
25. FLUSH MOUNTED J-BOX 18" A.F.F. WITH 1" CONDUIT TO ABOVE CEILING FOR FUTURE USE.
26. COORDINATE WITH MECHANICAL, MECHANICAL SHALL SUPPLY ALL THERMOSTATS, ELECTRICAL SHALL INSTALL 120V SUPPLY THERMOSTATS FOR THE RADIANT HEATERS.
27. PROVIDE PLUG FOR ICE MAKER AT 48" A.F.F.
28. CONTRACTOR SHALL INSTALL ALL RECEPTACLES, SWITCHES, AND MOTOR SWITCHES IN EQUIPMENT SHOP FLUSH MOUNTED TO PLYWOOD COORDINATE DISCIPLINES.
29. PROVIDE DUPLEX RECEPTACLE AND VOICE/DATA OUTLET ON CEILING FOR PROJECTOR CONNECTIONS. PROJECTOR AND EQUIPMENT PROVIDED BY OWNER.
30. PROVIDE DUPLEX RECEPTACLE AND VOICE/DATA OUTLET AT 72" A.F.F. FOR TELEVISION CONNECTIONS. TELEVISION AND EQUIPMENT PROVIDED BY OWNER.
31. COORIDATE WITH MECHANICAL CONTRACTOR TO AVOID INTERFENCES, DUCTWORK PASSES OVER THE TOP OF THE PANELBOARD. TRANSITION ELECTRICAL CONDUITS TO CLEAR DUCTWORK.

APPLIES TO ALL E-SHEETS

GENERAL NOTES

1. THE LOCATION OF ELECTRICAL ITEMS ON THE ELECTRICAL DRAWINGS ARE DIAGRAMMATIC AND ARE NOT INTENDED TO GIVE COMPLETE AND ACCURATE DETAILS IN REGARD TO LOCATION. EXACT LOCATION SHOULD BE DETERMINED BY ACTUAL MEASUREMENTS AT THE BUILDING, AND WILL IN ALL CASES BE SUBJECT TO THE APPROVAL OF THE ENGINEER. THE ENGINEER RESERVES THE RIGHT TO MAKE ANY REASONABLE CHANGES IN THE LOCATIONS INDICATED WITHOUT ADDITIONAL COST.
2. THE ELECTRICAL DISTRIBUTION SYSTEM SIZING IS BASED ON EQUIPMENT DATA FROM THE SPECIFIED SUPPLIER OR A TYPICAL SUPPLIER. THE CONTRACTOR IS FULLY RESPONSIBLE FOR PROVIDING THE CORRECTLY SIZED ELECTRICAL SYSTEM TO MATCH THE REQUIREMENTS OF THE NEW EQUIPMENT.
3. THE ELECTRICAL SYSTEM SHALL BE GROUNDED IN ACCORDANCE WITH ARTICLE 250 OF THE NATIONAL ELECTRICAL CODE. ALL ELECTRICAL SYSTEMS RECEPTACLES, CABINETS, JUNCTION BOXES, MOTOR FRAMES, MISCELLANEOUS EQUIPMENT, ETC. SHALL BE GROUNDED BY A GREEN-WIRE GROUND CONDUCTOR.
4. UNLESS OTHERWISE NOTED - ALL HOME RUNS SHALL BE 3 EACH #12 THHN/THWN, ¾" C.
5. THE MINIMUM CONDUIT SIZE FOR ELECTRICAL CIRCUITS SHALL BE ¾". THE MINIMUM CONDUIT SIZE FOR VOICE / DATA CIRCUITS SHALL BE 1".
6. ALL DUPLEX/QUAD OUTLETS SHALL BE MOUNTED AS INDICATED ON DRAWING, TO CENTER OF OUTLET. GROUND TERMINAL SHALL POINT DOWN. MOUNT 18" A.F.F. UNLESS OTHERWISE NOTED.
7. WHERE CALLED FOR, USE 2 OR 3 POLE BREAKERS. TYING SINGLE POLE BREAKERS TOGETHER TO CREATE A 2 OR 3 POLE BREAKER IS PROHIBITED.
8. ALL EXTERIOR ILLUMINATION FOR THE BUILDING AND ALL OF THE AREA SITE LIGHTING SHALL BE CONTROLED AS INDICATED ON RISER DIAGRAM.
9. CONTRACTOR IS RESPONSIBLE FOR COORDINATING WITH THE UTILITY COMPANY PRIOR TO BID TO ESTABLISH REQUIREMENTS FOR SERVICE AND TO IDENTIFY MATERIALS AND EQUIPMENT WHICH SHALL BE PROVIDED BY CONTRACTOR AND WHICH SHALL BE PROVIDED BY THE UTILITY COMPANY.
10. THE BIDDER SHALL VISIT THE SITE OF THE PROPOSED WORK AND SHALL FULLY INFORM HIMSELF REGARDING THE FACILITIES. NO ADDITIONAL COMPENSATION WILL BE ALLOWED FOR WORK OR MATERIALS OMITTED FROM BIDDER'S CONTRACT PROPOSAL DUE TO HIS FAILURE TO INFORM HIMSELF BY SUCH INVESTIGATION.
11. THE ELECTRICAL CONTRACTOR SHALL GUARANTEE AGAINST DEFECTS IN ANY OR ALL MATERIALS, EQUIPMENT, OR WORKMANSHIP COVERED BY THE ELECTRICAL SPECIFICATIONS, EXCEPT SUCH MATERIALS, EQUIPMENT, OR WORKMANSHIP FURNISHED BY OTHERS AND SHALL MAKE GOOD, REPAIR, OR REPLACE, AT HIS OWN EXPENSE, ANY DEFECTIVE WORK, MATERIAL OR PART WHICH MAY BECOME EVIDENT WITHIN A PERIOD OF ONE YEAR AFTER FINAL ACCEPTANCE OF THE WORK. NECESSARY SERVICE AND ADJUSTMENT DURING THE EARLY STAGES OF OPERATION AFTER OCCUPANCY SHALL BE PROVIDED BY THE CONTRACTOR WITHOUT ADDITIONAL COST TO THE OWNER.
12. ALL ELECTRICAL EQUIPMENT, CONDUIT, HANGERS, ECT. IN MECHANICAL ROOMS AND FENCED OUT AREAS CAN BE EXPOSED. HIDE ALL CONDUIT, HANGERS, EQUIPMENT FROM SIGHT OF THE GENERAL PUBLIC, NO EXCEPTIONS UNLESS PERMITTED BY ENGINEER IN WRITTING.
13. TXDOT EQUIPMENT REQUIREMENT;
    - A. WHERE APPLICABLE, ALL LAMPS USED ON THIS PROJECT SHALL BE OF THE TOXIC CHARACTERISTIC LEACHATE PROCEDURE (TCLP) LOW MERCURY TYPE.
    - B. WHERE APPLICABLE, ALL LAMPS SCHEDULED FOR REPLACEMENT, EITHER BY DEMOLITION OR MAINTENANCE, SHALL BE HELD AND DISPOSED OF IN ACCORDANCE WITH THE UNIVERSAL WASTE RULE.
14. CONTRACTOR SHALL ALLOW FOR COORDINATION MEASURES AND QUALIFIED TECHNICIAN MAN HOURS FOR LIGHT FIXTURE ALIGNMENT AND ADJUSTMENTS AS NECESSARY UNTIL THE OWNER IS SATISFIED.
15. INDEPENDENTLY SUPPORT ALL LIGHT FIXTURES MOUNTED IN CEILING GRID FROM ABOVE BUILDING STRUCTURE AT ALL FOUR CORNERS. ROUND FIXTURES SHALL BE SUPPORTED IN TWO PLACES.
16. SLEEVE ALL WALL PENETRATIONS WITH SLEEVE 2 PIPE SIZES LARGER THAN PENETRATING PIPE. SLEEVE AND PENETRATING PIPE SHALL BE CONSTRUCTED FROM THE SAME MATERIAL. MAINTAIN INSULATION THROUGH SLEEVES.
17. FIRE CAULK ALL PENETRATIONS WHERE ARCHITECTURAL PLANS CALL FOR FIRE RATED CONSTRUCTION WALLS. STOP INSULATION SHORT OF SLEEVE FILL ANNULAR SPACES WITH FIRE RATED CAULK.

ELECTRICAL GENERAL NOTES, KEYED NOTES AND SYMBOLS

NOTE: THIS DRAWING WAS CREATED FOR PRODUCTION ON 22" x 34" SHEET SIZE. DO NOT SCALE PRINTS.

Texas Department of Transportation
125 E. 11th Street
Austin, Texas 78701-2483
(512) 416-3048
Copyright © 2005 Texas Department of Transportation

THIS DOCUMENT IS RELEASED FOR THE PURPOSE OF
INFORMATION ONLY
NOT FOR REGULATORY
APPROVAL, PERMITTING,
OR CONSTRUCTION.

EDCOUCH
MAINTENANCE FACILITY
HIDALGO COUNTY, EDCOUCH TEXAS
PHARR DISTRICT

Revisions

Drawn by:
CON
Project No.

Date
05-26-2009
Sheet No.
E2.0
of 12 E sheets

CADFILE: T:\MNTFM\D02FTW\CSC\704-00-537\02-77-070400537\Acad\prototypical pdfs\edcouch\Acad\MEP\ELEC\E2_0.dwg Plotted: Fri, Aug. 07, 2009 @ 11:26 AM By: MBAZAN

NORTH

1 LIGHTING PLAN OFFICE BUILDING

SCALE: 1/8" = 1'-0"

0' 2' 4' 8' 16'

SEE E2.0 FOR GENERAL AND KEYED NOTES

LIGHTING PLAN

NOTE: THIS DRAWING WAS CREATED FOR PRODUCTION ON 22" x 34" SHEET SIZE. DO NOT SCALE PRINTS.

Texas Department of Transportation
125 E. 11th Street
Austin, Texas 78701-2483
(512) 416-3045

Copyright © 2005 Texas Department of Transportation

THIS DOCUMENT IS RELEASED FOR THE PURPOSE OF
INFORMATION ONLY
NOT FOR REGULATORY
APPROVAL, PERMITTING,
OR CONSTRUCTION.

EDCOUCH MAINTENANCE FACILITY

HIDALGO COUNTY, EDCOUCH TEXAS
PHARR DISTRICT

Revisions

Drawn by:
CON

Project No.

Date
05-26-2009

Sheet No.

E2.1

of 12 E sheets

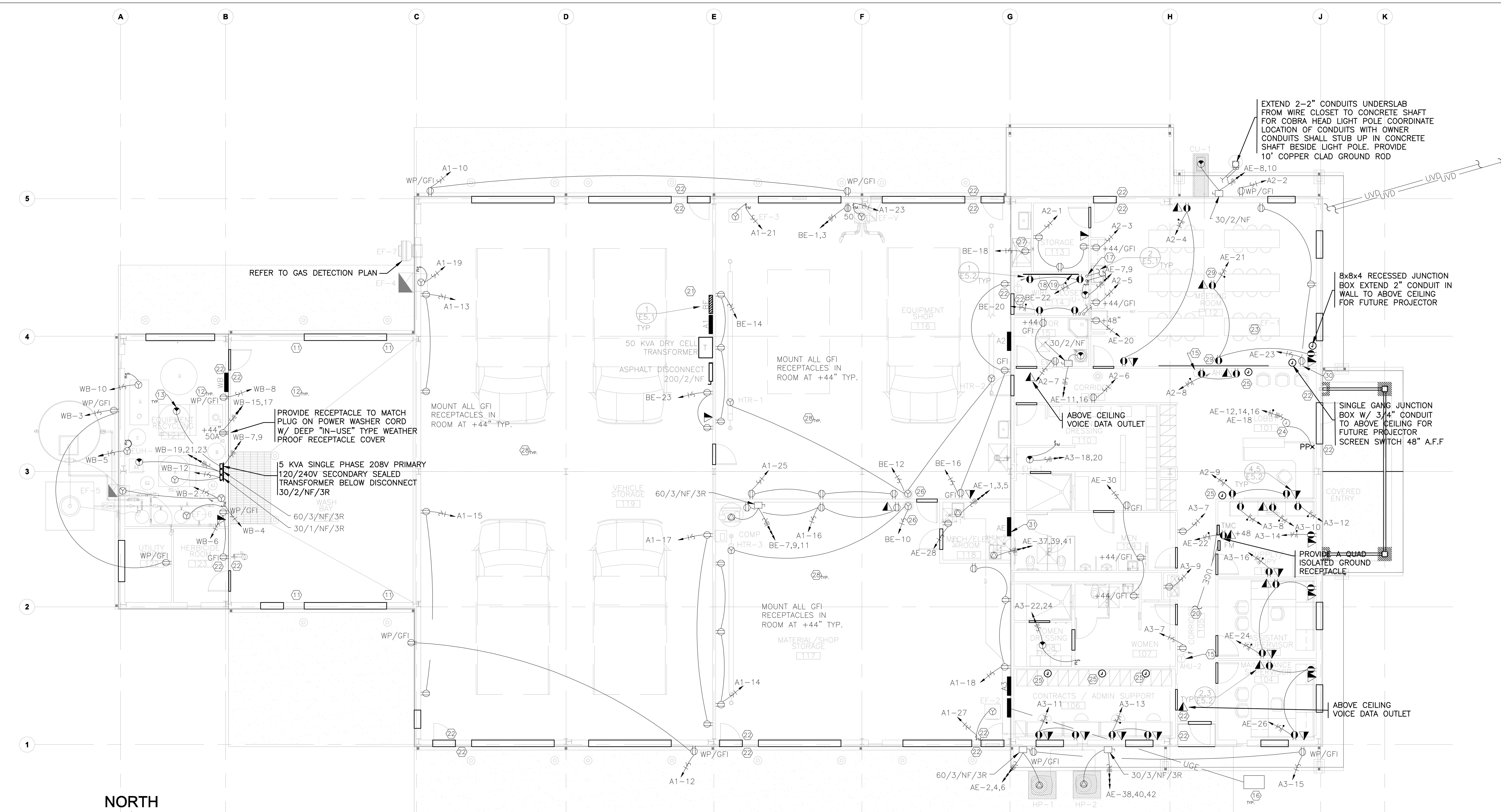

NORTH

1 POWER PLAN OFFICE BUILDING

SCALE: 1/8" = 1'-0"

0' 2' 4' 8' 16'

NOTE:
PROVIDE AN ENGRAVED, LAMINATED NAMEPLATE FOR EACH NEW OR EXISTING DISCONNECT, PANELBOARD, CIRCUIT BREAKER ENCLOSURE, TRANSFORMER, OR OTHER ELECTRICAL ENCLOSURE. STATE THE DEVICES NAME, VOLTAGE, & PHASE ON THE NAMEPLATE. IF REQUIRED, STATE THAT THE DEVICE IS FED FROM THE EMERGENCY DISTRIBUTION SYSTEM. ALSO, STATE WHERE THE DEVICE FEEDS FROM.

FOR EXAMPLE, EMERGENCY PANEL N-1H-E, NAMEPLATE WOULD READ:
EMERGENCY PANEL N-1H-E
480 VOLT, 3-PHASE
FEEDS FROM EMERGENCY PANEL ME

FOR RECEPTACLE FACE PLATES, USE SMALL PRINTED LABELS OR OTHER SIMILAR LABELING WITH IDENTIFYING INFORMATION.

MODULAR FURNITURE WIRE STANDARD

MODULAR FURNITURE POWER (4 CIRCUIT 3+D, 8 WIRES)

PHASE	SIZE	COLOR	INSULATION	FUNCTION
A	#12	RED	RED #12 AWG THWN/THHN	HOT 1
B	#12	BLACK	BLACK #12 AWG THWN/THHN	HOT 2
C	#12	BLUE	BLUE #12 AWG THWN/THHN	HOT 3
NEUT.	#10	WHITE	WHITE #10 AWG THWN/THHN	OVER-SIZED NEUTRAL
GND.	#12	GREEN	GREEN #12 AWG THWN/THHN	GROUND
A,B,OR C	#12	PINK	PINK #12 AWG THWN/THHN	HOT 4
NEUT.	#12	GREY	GREY #12 AWG THWN/THHN	NEUTRAL
GND.	#12	GREEN / YELLOW	GREEN AND YELLOW #12 AWG THWN/THHN	ISOLATED GROUND

NOTE: WIRE SIZES ARE MINIMUM. WHERE HOMERUNS EXCEED 100FT IN LENGHT #12 CONDUCTORS SHALL BECOME #10 AND #10 CONDUCTORS SHALL BECOME #8.

SEE E2.0 FOR GENERAL AND KEYED NOTES

Texas Department of Transportation
125 E. 11th Street
Austin, Texas 78701-2483
(512) 416-2040

Copyright © 2005 Texas Department of Transportation

THIS DOCUMENT IS RELEASED FOR THE PURPOSE OF INFORMATION ONLY
NOT FOR REGULATORY APPROVAL, PERMITTING, OR CONSTRUCTION.

EDCOUCH MAINTENANCE FACILITY
HIDALGO COUNTY, EDCOUCH TEXAS PHARR DISTRICT

Revisions

Drawn by: CON
Project No.
Date 05-26-2009
Sheet No.

E2.2 of 12 E sheets

POWER PLAN

NOTE: THIS DRAWING WAS CREATED FOR PRODUCTION ON 22" x 34" SHEET SIZE. DO NOT SCALE PRINTS.

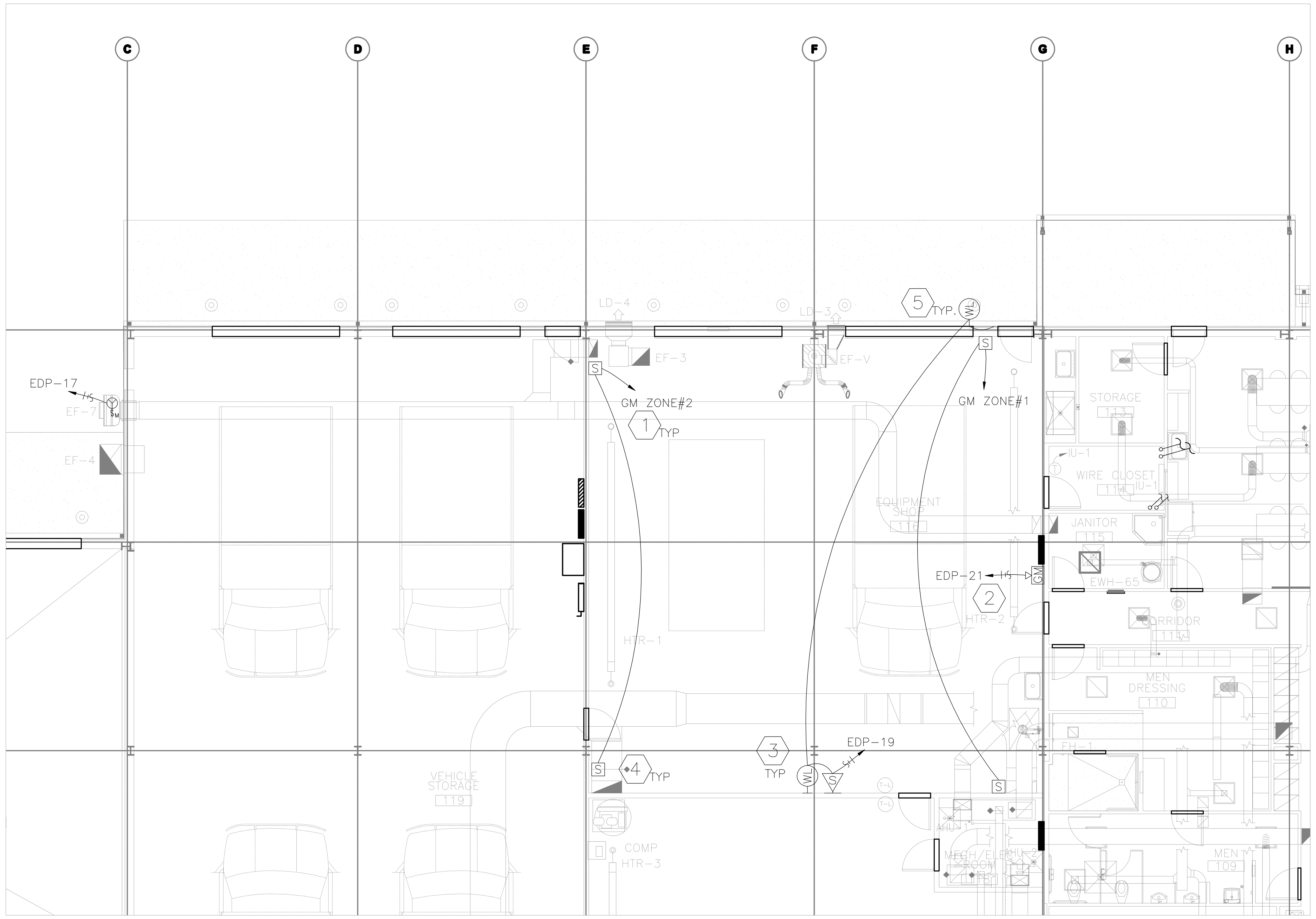

NORTH

1 GAS DETECTION PLAN KEY PLAN BLDG. #1

SCALE: 1/8" = 1'-0"

0' 2' 4' 8' 16'

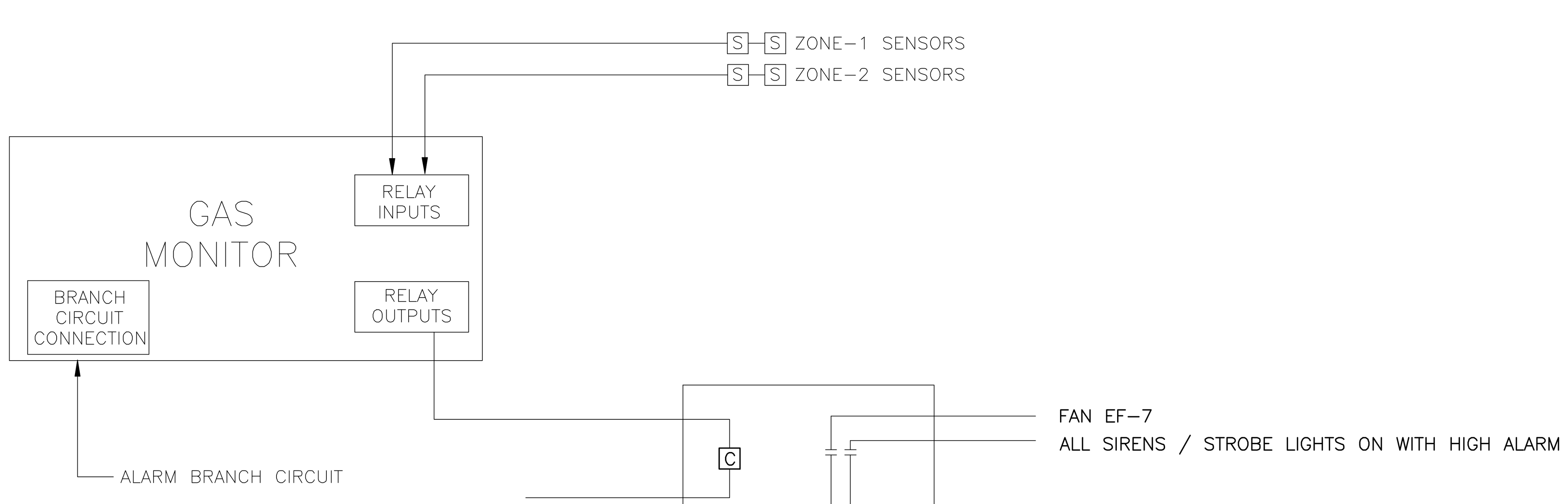

2 LPG GAS DECTECTION RISER

SCALE: NOT TO SCALE

LIQUID PETROLEUM GAS DETECTION LEGEND & SCHEDULE

MARK	ZONES	MANUFACTURER, MODEL/SIZE	DESCRIPTION
GM	1	ARMSTRONG, AMC-1AD2	MULTI-DROP DUAL ZONE GAS MONITORING SYSTEM WITH A HIGH AND A LOW ALARM 120 V, 10 AMP RELAY. SUPPLY VOLTAGE 120 VAC, 60 HZ. FEATURING LED LOW, HIGH, AND FAIL INDICATION. INTERCONNECT EXHAUST FANS AND STROBE WARNING LIGHTS (SEE ELECTRICAL). INSTALL PER MANUFACTURER'S RECOMMENDATIONS.
S	-----	ARMSTRONG, AMC-1225 COMBUSTIBLE GAS	MULTI-DROP GAS SENSOR MODULE COMPATIBLE WITH AMC-1022D. SENSORS SHALL BE DAISY CHAINED TOGETHER. LEAVE THE TERMINATING JUMPER ON THE END SENSOR UNIT. SENSOR IS SOLID STATE, 0 - 50% LEL, PVC ENCLOSURE. MOUNT ALL SENSORS 18" ABOVE FINISHED FLOOR.
WL	-----	FEDERAL SIGNAL CORPORATION, ELECTRAFLASH MODEL#141ST-120A	"ELECTRAFLASH" STROBE WARNING LIGHT FEDERAL SIGNAL GRAINGER #3T948 LENS COLOR BLUE 120 VAC 0.06 AMPS. COMPLETE WITH MOUNTING KIT, GRAINGER #5T588. MOUNT LIGHTS 10 FT ABOVE FINISHED GRADE.
S	-----	FEDERAL SIGNAL CORPORATION, MODEL A-120 ELECTRIC SIREN, 120 VAC/DC, RED	GENERAL PURPOSE ELECTRO-MECHANICAL SIREN FOR INDUSTRIAL APPLICATIONS. 120VAC 1.8 AMPS. EQUIPPED WITH AN INTERNAL FAN, METAL HOUSING, RATED AT 108dB @ 10'.

GAS DETECTION KEYED NOTES -

1. MOUNT SENSORS 18" A.F.F. DAISY CHAIN SENSORS TOGETHER.
2. MOUNT GAS MONITOR 48 A.F.F.
3. UNLESS OTHERWISE NOTED, ALL HOME RUNS SHALL BE 3 # 12 THHN, 3/4" EMT CONDUIT.
4. ALL SENSOR CONNECTIONS SHALL BE 3 # 18 SHEILD, 1/2" EMT CONDUIT.
5. MOUNT STROBE LIGHTS AND SIRENS 10FT A.F.F..

SEE E2.0 FOR GENERAL NOTES

Texas Department of Transportation
125 E. 11th Street
Austin, Texas 78701-2483
(512) 416-3048
Copyright © 2005 Texas Department of Transportation

THIS DOCUMENT IS RELEASED FOR THE PURPOSE OF INFORMATION ONLY
NOT FOR REGULATORY APPROVAL, PERMITTING, OR CONSTRUCTION.

EDCOUCH MAINTENANCE FACILITY

HIDALGO COUNTY, EDCOUCH TEXAS
PHARR DISTRICT

Revisions

Drawn by: CON
Project No.
Date 05-26-2009
Sheet No.
E2.3
of 12 E sheets

GAS DETECTION PLAN

NOTE: THIS DRAWING WAS CREATED FOR PRODUCTION ON 22" x 34" SHEET SIZE. DO NOT SCALE PRINTS.

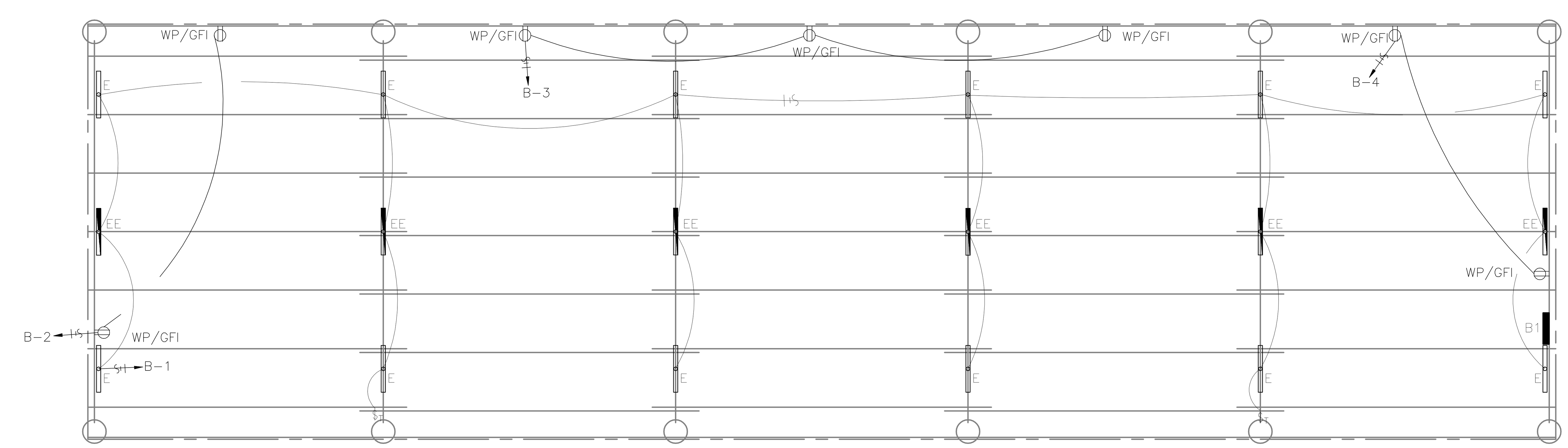

NORTH

1 LIGHTING & POWER PLAN

SCALE: 1/8" = 1'-0"

0' 2' 4' 8' 16'

SEE E2.0 FOR GENERAL AND KEYED NOTES

LIGHTING & POWER PLAN - EQUIPMENT SHED

NOTE: THIS DRAWING WAS CREATED FOR PRODUCTION ON 22" x 34" SHEET SIZE. DO NOT SCALE PRINTS.

Texas Department of Transportation
125 E. 11th Street
Austin, Texas 78701-2483
(512) 416-2048

Copyright © 2005 Texas Department of Transportation

THIS DOCUMENT IS RELEASED FOR THE PURPOSE OF INFORMATION ONLY
NOT FOR REGULATORY APPROVAL, PERMITTING, OR CONSTRUCTION.

EDCOUCH MAINTENANCE FACILITY
HIDALGO COUNTY, EDCOUCH TEXAS
PHARR DISTRICT

Revisions

Drawn by: CON

Project No.

Date 05-26-2009

Sheet No.

E2.4

of 12 E sheets

LIGHTING FIXTURE SCHEDULE

TYPE	MANUFACTURER AND MODEL NUMBER	VOLTAGE	LAMPS	NOTES	INPUT WATTS
A	LITHONIA 2SP8-G-232-A12125-120-GEB	120	2-F32T8 3500 K	2 LAMP LAYIN TROFFER	65
AE	LITHONIA 2SP8-G-232-A12125-120-GEB-EL	120	2-F32T8 3500 K	SAME AS 'A' WITH BATTERY PACK	65
BD	LITHONIA 2SP8-G-332-A12125-120-GEB	120	3-F32T8 3500 K	3 LAMP LAYIN TROFFER WITH DUAL LEVEL SWITCHING	100
BDE	LITHONIA 2SP8-G-332-A12125-120-GEB-EL	120	3-F32T8 3500 K	SAME AS 'BD' WITH BATTERY PACK	100
D	LITHONIA WP-225-ACF125-120-GEB	120	2-F25T8 3500 K	WALL MOUNTED FIXTURE MOUNT 8' A.F.F.	65
EE	LITHONIA C-232-120-GEB-WG-EL	120	2-F32T8 3500 K	CHANNEL FIXTURE WITH WIRE GUARD AND BATTERY PACK	65
F	LITHONIA LGF-2-18TRT-10-RW-FFL-120	120	2-18TRT 3500 K	WET LOCATION RECESSED DOWN LIGHT	40
G	LITHONIA N2S-17-MVOLT-GEB10IS	120	1-F17T8 3500 K	UNDER COUNTER FIXTURE	25
H	LITHONIA DMW-232-AR-120-GEB	120	2-F32T8 3500 K	WET ENCLOSED INDUSTRIAL CHANNEL FIXTURE	65
HE	LITHONIA DMW-232-AR-120-GEB-EL	120	2-F32T8 3500 K	SAME AS 'H' WITH BATTERY PACK	65
J	SPECLIGHT FWB164-4-32-S1-X20-ACL-MVOLT-GEB-WG	120	4-F32T8 3500 K	CHAIN HUNG WET LOCATION ENCLOSED FLUORESECENT HIGH BAY FIXTURE	130
K	SPECLIGHT FGB24-6-32-S1-X20U-MVOLT-GEB-WG	120	6-F32T8 3500 K	CHAIN HUNG FLUORESCENT HIGH BAY FIXTURE	200
KE	SPECLIGHT FGB24-6-32-S1-X20U-MVOLT-GEB-WG-EL	120	6-F32T8 3500 K	SAME AS 'K' WITH BATTERY PACK	200
L	SPECLIGHT FGB14-3-32-S1-X20U-MVOLT-GEB-WG	120	3-F32T8 3500 K	CHAIN HUNG FLUORESCENT FIXTURE	100
LE	SPECLIGHT FHB14-3-32-S1-X20U-MVOLT-GEB-WG	120	3-F32T8 3500 K	SAME AS 'L' WITH BATTERY PACK	100
M	LITHONIA TWH-175M-120	120	1-175W MH	WALL PACK - COLOR BY ARCHITECT	210
N	LITHONIA VGR1-42TRT-GL-120-CC-GEB	120	1-42TRT	ROUUND SURFACE MOUNT WITH BACKPLATE - WET LOCATION	70
P	LITHONIA TFM-70M-TA-TB	208	1-70W MH	MOUNT FLOOD LIGHT 5 FEET FROM CENTER LINE OF SIGN	90
SR	LITHONIA KAD-400M-R2-208-RPD09-LP1	208	1-400W MH	DARK BRONZE PAINT AND RTSP ADAPTER	455
POLE	KW INDUSTRIES RTSP40-9-12-KZ13-DM10			GALVANIZED STEEL POLE WITH POWDER COAT PAINT-DARK BRONZE	
X1	LITHONIA LHQM-S-W-1-R-120-N-H	120	LED	SINGLE FACE EXIT SIGN	3.9

ELECTRICAL LOAD ANALYSIS

LIGHTING LOAD @ 125% (VA)			54,863
AREA (SQ FT)	12,540 x3.5 =	43,890	
CONNECTED LIGHT LOAD VA		14,950	
LIGHTING VA		43,890	
RECEPTACLE LOAD (VA)			17,030
CONNECTED RECPT LOAD	24,060		
1st 10KVA @ 100%	10,000		
REMAINDER @ 50%	7,030		
GENERAL LOAD @ 100% (VA)			87,432
LARGEST MOTOR LOAD @ 125% (VA)			18,975
COOLING LOAD @ 100% (VA)			31,128
HEATING LOAD @ 100% (VA)			63,900
SPARE CAPACITY (VA) @	5 %		13,666
TOTAL SERVICE KVA			287
TOTAL SERVICE AMPS @	208	VOLTS	797

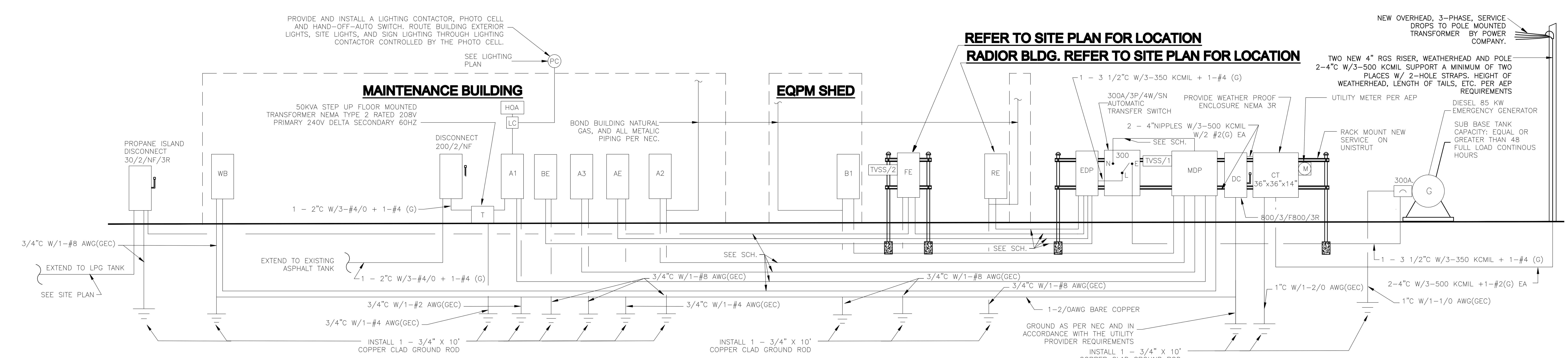

Texas Department of Transportation
125 E. 11th Street
Austin, Texas 78701-2483
(512) 416-2055
Copyright © 2005 Texas Department of Transportation

THIS DOCUMENT IS RELEASED FOR THE PURPOSE OF INFORMATION ONLY
NOT FOR REGULATORY APPROVAL, PERMITTING, OR CONSTRUCTION.

EDCOUCH MAINTENANCE FACILITY
HIDALGO COUNTY, EDCOUCH TEXAS
PHARR DISTRICT

Revisions

Drawn by: CON
Project No.
Date 05-26-2009
Sheet No.
E3.1
of 12 E sheets

ELECTRICAL RISER DIAGRAM & LIGHTING SCHEDULE

NOTE: THIS DRAWING WAS CREATED FOR PRODUCTION ON 22" x 34" SHEET SIZE. DO NOT SCALE PRINTS.

PANEL "MDP" 800 A MCB ISOLATED GROUND BAR

SERVICE 208/120V, 3ø, 4 WIRE — AIC 35,000 — NEMA 3R

CONDUIT & WIRE	CRT#	BKR / P	ITEM DESCRIPTION	AMPS	A	B	C	AMPS	ITEM DESCRIPTION	BKR / P	CRT#	CONDUIT & WIRE
1 - 3"C w/ 4-350 MCM + 2-#4(G)EA	1	300 / 3	PANEL A1	60.3	108.4			48.0	PANEL WB	100 / 3	2	1 - 1 1/4"C w/ 4-#3 + 2-#8(G)EA
	3			177.3		254.8		77.5		/	4	
	5			165.7			234.7	69.0		/	6	
1 - 2"C w/ 4-#1/0 + 2-#6(G)EA	7	100 / 3	PANEL A2	12.0	321.3			309.3	EDP (XFER SWITCH)	300 / 3	8	1 - 3"C w/ 4-350 MCM + 2-#4(G)EA
	9			16.0		306.4		290.4		/	10	
	11			11.5			270.5	259.0		/	12	
1 - 2"C w/ 4-#1/0 + 2-#6(G)EA	13	100 / 3	PANEL A3	24.5	24.5			0.0	SPARE	200 / 3	14	
	15			28.0		28.0		0.0			16	
	17			28.0			28.0	0.0			18	
1 - 2"C w/ 4-#1/0 + 2-#6(G)EA	19	100 / 3	PANEL B1	12.8	12.8			0.0	SPARE	20 / 2	20	
	21			7.5		7.5		0.0			22	
	23			0.0			0.0	0.0	SPARE	20 / 2	24	
	25	20 / 1	SPARE	0.0	0.0			0.0			26	
	27	20 / 1	SPARE	0.0		0.0		0.0	SPARE	20 / 2	28	
	29	20 / 1	SPARE	0.0			0.0	0.0			30	
	31		SPACE	0.0	0.0			0.0	SPACE		32	
	33			0.0		0.0		0.0			34	
	35			0.0			0.0	0.0			36	
	37		SPACE	0.0	0.0			0.0	SPACE		38	
	39			0.0		0.0		0.0			40	
	41			0.0			0.0	0.0			42	
* GFCI BREAKER					467.0	596.7	533.2					

**PROVIDE A CIRCUIT BREAKER CAPABLE OF BEING LOCKED IN THE OPEN POSITION

CONTRACTOR SHALL SUPPLY APPROPRIATE FRAME RATING TO ACCOMMODATE FEEDER WIRE SIZE AND BRANCH CIRCUIT WIRES FOR ALL BEAKERS ON THIS PROJECT

PANEL "A1" 300 A MCB ISOLATED GROUND BAR

SERVICE 208/120V, 3ø, 4 WIRE — AIC 22,000 — NEMA 1

CONDUIT & WIRE	CRT#	BKR / P	ITEM DESCRIPTION	AMPS	A	B	C	AMPS	ITEM DESCRIPTION	BKR / P	CRT#	CONDUIT & WIRE
1 - 3/4"C w/ 2-#12 + 1-#12(G)EA	1	20 / 2	**FUEL SITE LIGHTING**	4.3	14.2			9.9	**EAST EXT. BLDG. LIGHTS**	20 / 1	2	1 - 3/4"C w/ 2-#10 + 1-#10(G)EA
	3			4.3		13.6		9.3	**WEST EXT. BLDG. LIGHTS**	20 / 1	4	1 - 3/4"C w/ 2-#10 + 1-#10(G)EA
1 - 3/4"C w/ 2-#12 + 1-#12(G)EA	5	20 / 2	**SITE LIGHTING**	6.5			14.0	7.5	VEHICLE STORAGE LIGHTS	20 / 1	6	1 - 3/4"C w/ 2-#12 + 1-#12(G)EA
	7			6.5	12.3			5.8	MAT. STORAGE LIGHTS	20 / 1	8	1 - 3/4"C w/ 2-#12 + 1-#12(G)EA
1 - 3/4"C w/ 2-#12 + 1-#12(G)EA	9	20 / 2	**SIGN AND SITE LIGHTS **	7.4		10.4		3.0	EAST EXT. BLDG. PLUGS	20 / 1	10	1 - 3/4"C w/ 2-#12 + 1-#12(G)EA
	11			7.4			10.4	3.0	WEST EXT. BLDG. PLUGS	20 / 1	12	1 - 3/4"C w/ 2-#12 + 1-#12(G)EA
1 - 3/4"C w/ 2-#12 + 1-#12(G)EA	13	20 / 1	VEHICLE STORAGE PLUGS	3.0	7.5			4.5	MAT. STORAGE PLUGS	20 / 1	14	1 - 3/4"C w/ 2-#12 + 1-#12(G)EA
1 - 3/4"C w/ 2-#12 + 1-#12(G)EA	15	20 / 1	VEHICLE STORAGE PLUGS	3.0		7.5		4.5	MAT. STORAGE PLUGS	20 / 1	16	1 - 3/4"C w/ 2-#12 + 1-#12(G)EA
1 - 3/4"C w/ 2-#12 + 1-#12(G)EA	17	20 / 1	VEHICLE STORAGE PLUGS	3.0			7.5	4.5	MAT. STORAGE PLUGS	20 / 1	18	1 - 3/4"C w/ 2-#12 + 1-#12(G)EA
1 - 3/4"C w/ 2-#12 + 1-#12(G)EA	19	20 / 1	EF-4	9.8	21.8			12.0	REFEED EXISTING	20 / 2	20	1 - 3/4"C w/ 3-#8 + 1-#8(G)EA
1 - 3/4"C w/ 2-#6 + 1-#6(G)EA	21	30 / 1	EF-3	16.0		16.0		0.0	YARD LIGHTING		22	
1 - 3/4"C w/ 2-#10 + 1-#10(G)EA	23	25 / 1	EF-V	13.8			13.8	0.0	SPARE	20 / 1	24	
1 - 3/4"C w/ 2-#12 + 1-#12(G)EA	25	20 / 1	EQUIPMENT SHOP PLUGS	4.5	4.5			0.0	SPARE	20 / 1	26	
1 - 3/4"C w/ 2-#12 + 1-#12(G)EA	27	20 / 1	EF-2	9.8		129.8		120.0	ASPHALT TANK	225 / 2	28	1 - 2"C w/ 3-#4/0 + 1-#4(G)EA
	29	20 / 1	SPARE	0.0			120.0	120.0	TRANSFORMER	/	30	
* GFCI BREAKER					60.3	177.3	165.7					

**PROVIDE A CIRCUIT BREAKER CAPABLE OF BEING LOCKED IN THE OPEN POSITION

CONTRACTOR SHALL SUPPLY APPROPRIATE FRAME RATING TO ACCOMMODATE FEEDER WIRE SIZE AND BRANCH CIRCUIT WIRES FOR ALL BEAKERS ON THIS PROJECT

PANEL "A2" 100 A MCB ISOLATED GROUND BAR

SERVICE 208/120V, 3ø, 4 WIRE — AIC 22,000 — NEMA 1

CONDUIT & WIRE	CRT#	BKR / P	ITEM DESCRIPTION	AMPS	A	B	C	AMPS	ITEM DESCRIPTION	BKR / P	CRT#	CONDUIT & WIRE
1 - 3/4"C w/ 2-#12 + 1-#12(G)EA	1	20 / 1	OFFICE STORAGE PLUGS	4.5	6.0			1.5	EAST EXT. BLDG PLUGS	20 / 1	2	1 - 3/4"C w/ 2-#12 + 1-#12(G)EA
1 - 3/4"C w/ 2-#12 + 1-#12(G)EA	3	20 / 1	MEETING COUNTER PLUG	10.0		13.0		3.0	MEETING RM PLUGS	20 / 1	4	1 - 3/4"C w/ 2-#12 + 2-#12(G)EA
1 - 3/4"C w/ 2-#12 + 1-#12(G)EA	5	20 / 1	MEETING COUNTER PLUG	10.0			11.5	1.5	CORRIDOR RM 111 PLUG	20 / 1	6	1 - 3/4"C w/ 2-#12 + 1-#12(G)EA
1 - 3/4"C w/ 2-#12 + 1-#12(G)EA	7	20 / 1	JANITOR RM PLUG	3.0	6.0			3.0	LOBBY EAST WALL PLUGS	20 / 1	8	1 - 3/4"C w/ 2-#12 + 2-#12(G)EA
1 - 3/4"C w/ 2-#12 + 2-#12(G)EA	9	20 / 1	LOBBY WEST WALL PLUGS	3.0		3.0		0.0	SPARE	20 / 1	10	
	11	20 / 1	SPARE	0.0			0.0	0.0	SPARE	20 / 1	12	
	13	20 / 1	SPARE	0.0	0.0			0.0	SPARE	20 / 1	14	
	15	20 / 1	SPARE	0.0		0.0		0.0	SPARE	20 / 1	16	
	17	20 / 1	SPARE	0.0			0.0	0.0	SPARE	20 / 1	18	
	19	20 / 1	SPARE	0.0	0.0			0.0	SPARE	20 / 1	20	
	21	20 / 1	SPARE	0.0		0.0		0.0	SPARE	20 / 1	22	
	23	20 / 1	SPARE	0.0			0.0	0.0	SPARE	20 / 1	24	
	25	20 / 1	SPARE	0.0	0.0			0.0	SPARE	20 / 1	26	
	27	20 / 1	SPARE	0.0		0.0		0.0	SPARE	20 / 1	28	
	29	20 / 1	SPARE	0.0			0.0	0.0	SPARE	20 / 1	30	
* GFCI BREAKER					12.0	16.0	11.5					

**PROVIDE A CIRCUIT BREAKER CAPABLE OF BEING LOCKED IN THE OPEN POSITION

CONTRACTOR SHALL SUPPLY APPROPRIATE FRAME RATING TO ACCOMMODATE FEEDER WIRE SIZE AND BRANCH CIRCUIT WIRES FOR ALL BEAKERS ON THIS PROJECT

PANEL "A3" 100 A MCB ISOLATED GROUND BAR

SERVICE 208/120V, 3ø, 4 WIRE — AIC 22,000 — NEMA 1

CONDUIT & WIRE	CRT#	BKR / P	ITEM DESCRIPTION	AMPS	A	B	C	AMPS	ITEM DESCRIPTION	BKR / P	CRT#	CONDUIT & WIRE
	1	50 / 3	SPARE	0.0	0.0			0.0	SPARE	45 / 3	2	
	3			0.0		0.0		0.0			4	
	5			0.0			0.0	0.0			6	
1 - 3/4"C w/ 2-#12 + 1-#12(G)EA	7	20 / 1	CORRIDOR RM 105 PLUG	1.5	6.5			5.0	SUPPLY COPY RM PLUG	20 / 1	8	1 - 3/4"C w/ 2-#12 + 2-#12(G)EA
1 - 3/4"C w/ 2-#12 + 1-#12(G)EA	9	20 / 1	*EWC*	5.0		10.0		5.0	SUPPLY COPY RM PLUG	20 / 1	10	1 - 3/4"C w/ 2-#12 + 2-#12(G)EA
1 - 3/4"C w/ 2-#12 + 2-#12(G)EA	11	20 / 1	CONTRACT/ADM PLUGS	3.0			8.0	5.0	SUPPLY COPY RM PLUG	20 / 1	12	1 - 3/4"C w/ 2-#12 + 2-#12(G)EA
1 - 3/4"C w/ 2-#12 + 2-#12(G)EA	13	20 / 1	CONTRACT/ADM PLUGS	3.0	8.0			5.0	SUPPLY COPY RM PLUG	20 / 1	14	1 - 3/4"C w/ 2-#12 + 2-#12(G)EA
1 - 3/4"C w/ 2-#12 + 1-#12(G)EA	15	20 / 1	WEST EXT. BLDG. PLUGS	3.0		8.0		5.0	SUPPLY COPY RM PLUG	20 / 1	16	1 - 3/4"C w/ 2-#12 + 2-#12(G)EA
	17	20 / 1	SPARE	0.0			10.0	10.0	EH-1	20 / 2	18	1 - 3/4"C w/ 3-#12 + 1-#12(G)EA
	19	20 / 1	SPARE	0.0	10.0			10.0			20	
	21	20 / 1	SPARE	0.0		10.0		10.0	EH-2	20 / 2	22	1 - 3/4"C w/ 3-#12 + 1-#12(G)EA
	23	20 / 1	SPARE	0.0			10.0	10.0			24	
	25	20 / 1	SPARE	0.0	0.0			0.0	SPARE	20 / 1	26	
	27	20 / 1	SPARE	0.0		0.0		0.0	SPARE	20 / 1	28	
	29	20 / 1	SPARE	0.0			0.0	0.0	SPARE	20 / 1	30	
* GFCI BREAKER					24.5	28.0	28.0					

**PROVIDE A CIRCUIT BREAKER CAPABLE OF BEING LOCKED IN THE OPEN POSITION

CONTRACTOR SHALL SUPPLY APPROPRIATE FRAME RATING TO ACCOMMODATE FEEDER WIRE SIZE AND BRANCH CIRCUIT WIRES FOR ALL BEAKERS ON THIS PROJECT

PANEL "B1" 100 A MCB ISOLATED GROUND BAR

SERVICE 208/120V, 3ø, 4 WIRE — AIC 22,000 — NEMA 3R

CONDUIT & WIRE	CRT#	BKR / P	ITEM DESCRIPTION	AMPS	A	B	C	AMPS	ITEM DESCRIPTION	BKR / P	CRT#	CONDUIT & WIRE
1 - 3/4"C w/ 2-#12 + 1-#12(G)EA	1	20 / 1	LIGHTS	9.8	12.8			3.0	RECEPTACLES	20 / 1	2	1 - 3/4"C w/ 2-#12 + 1-#12(G)EA
1 - 3/4"C w/ 2-#12 + 1-#12(G)EA	3	20 1	RECEPTACLES	4.5		7.5		3.0	RECEPTACLES	20 / 1	4	1 - 3/4"C w/ 2-#12 + 1-#12(G)EA
	5	20 / 1	SPARE	0.0			0.0	0.0	SPARE	20 / 1	6	
	7	20 1	SPARE	0.0	0.0			0.0	SPARE	20 / 1	8	
	9	20 / 1	SPARE	0.0		0.0		0.0	SPARE	20 / 1	10	
	11	20 1	SPARE	0.0			0.0	0.0	SPARE	20 / 1	12	
					12.8	7.5	0.0					

PANEL "WB" 100 A MCB

SERVICE 208/120V, 3ø, 4 WIRE — AIC 22,000 — NEMA 3R

CONDUIT & WIRE	CRT#	BKR / P	ITEM DESCRIPTION	AMPS	A	B	C	AMPS	ITEM DESCRIPTION	BKR / P	CRT#	CONDUIT & WIRE
1 - 3/4"C w/ 2-#12 + 1-#12(G)EA	1	20 / 1	WASHBAY LIGHTS	7.0	9.0			2.0	EF-5	15 / 1	2	1 - 3/4"C w/ 2-#12 + 1-#12(G)EA
1 - 3/4"C w/ 2-#12 + 1-#12(G)EA	3	20 / 0	EXT. BLDG. PLUGS	3.0		5.0		2.0	EF-6	15 / 1	4	1 - 3/4"C w/ 2-#12 + 1-#12(G)EA
1 - 3/4"C w/ 2-#12 + 1-#12(G)EA	5	20 / 1	EUH-1	12.5			15.5	3.0	HERBICIDE & EQP RM PLUGS	20 / 1	6	1 - 3/4"C w/ 2-#12 + 1-#12(G)EA
1 - 3/4"C w/ 3-#10 + 1-#10(G)EA	7	30 / 2	RECYLCLING UNIT "C"	20.0	21.5			1.5	EQUIPMENT RM PLUG	20 / 1	8	1 - 3/4"C w/ 2-#12 + 1-#12(G)EA
	9			20.0		28.0		8.0	INCINERATOR "G"	20 / 1	10	1 - 3/4"C w/ 2-#12 + 1-#12(G)EA
	11	30 / 2	SPARE	0.0			9.0	9.0	SOLIDS SEPARATOR "A"	20 / 1	12	1 - 3/4"C w/ 2-#12 + 1-#12(G)EA
	13			0.0	0.0			0.0	SPARE	20 / 1	14	
1 - 3/4"C w/ 3-#8 + 1-#10(G)EA	15	50 / 2	5-HP PRESSURE WASHER	27.0		27.0		0.0	SPARE	20 1	16	
	17			27.0			27.0	0.0	SPARE	20 / 1	18	
1 - 3/4"C w/ 3-#8 + 1-#10(G)EA	19	35 / 3	WASHBAY	17.5	17.5			0.0	SPARE	20 / 1	20	
	21		5-HP	17.5		17.5		0.0	SPARE	20 / 1	22	
	23		AIR COMPRESSOR	17.5			17.5	0.0	SPARE	20 / 1	24	
	25	20 / 1	SPARE	0.0	0.0			0.0	SPARE	20 / 1	26	
	27	20 / 1	SPARE	0.0		0.0		0.0	SPARE	20 / 1	28	
	29	20 / 1	SPARE	0.0			0.0	0.0	SPARE	20 / 1	30	
* GFCI BREAKER					48.0	77.5	69.0					

**PROVIDE A CIRCUIT BREAKER CAPABLE OF BEING LOCKED IN THE OPEN POSITION

CONTRACTOR SHALL SUPPLY APPROPRIATE FRAME RATING TO ACCOMMODATE FEEDER WIRE SIZE AND BRANCH CIRCUIT WIRES FOR ALL BEAKERS ON THIS PROJECT

Texas Department of Transportation
125 E. 11th Street
Austin, Texas 78701-2483
(512) 416-3048

Copyright © 2008 Texas Department of Transportation

THIS DOCUMENT IS RELEASED FOR THE PURPOSE OF
INFORMATION ONLY
NOT FOR REGULATORY
APPROVAL, PERMITTING,
OR CONSTRUCTION.

EDCOUCH MAINTENANCE FACILITY

HIDALGO COUNTY, EDCOUCH TEXAS
PHARR DISTRICT

Revisions

Drawn by: CON

Project No.

Date 05-26-2009

Sheet No.

E4.1

of 12 E sheets

ELECTRICAL PANELBOARD SCHEDULES -1

NOTE: THIS DRAWING WAS CREATED FOR PRODUCTION ON 22" x 34" SHEET SIZE. DO NOT SCALE PRINTS.

CADFILE: T:\MNTFMD02FTW\CBC4704-00-837\02-77-470400837\Acad\prototypical pdfs\edcouch\Acad\MEP\ELEC\E4_1.dwg Plotted: Fri. Aug. 07, 2009 @ 11:32 AM By: MBAZAN

PANEL "EDP" 300 A MCB ISOLATED GROUND BAR

SERVICE 208/120V, 3ø, 4 WIRE AIC 35,000 NEMA 3R

CONDUIT & WIRE	CRT#	BKR / P	ITEM DESCRIPTION	AMPS	A	B	C	AMPS	ITEM DESCRIPTION	BKR / P	CRT#	CONDUIT & WIRE
1 - 2 1/2"C w/ 4-250 MCM + 2-#4(G)EA	1	250 / 3	PANEL AE	171.5	209.5			38.0	PANEL FE	50 / 3	2	1 - 1 1/2"C w/ 4-#1 + 2-#4(G)EA
	3			160.6		193.6		33.0			4	
	5			169.9			173.9	4.0			6	
1 - 1 1/4"C w/ 3-#1 + 1-#6(G)EA	7	125 / 3	PANEL BE	84.8	94.8			10.0	PANEL RE	40 / 3	8	1 - 1 1/4"C w/ 4-#3 + 2-#6(G)EA
	9			88.8		94.8		6.0			10	
	11			75.1			85.1	10.0			12	
1 - 3/4"C w/ 2-#12 + 1-#12(G)EA	13	20 / 1	GEN SET CHARGER	5.0	5.0			0.0	SPARE	20 / 1	14	
1 - 3/4"C w/ 2-#12 + 1-#12(G)EA	15	20 / 1	GEN SET HEATER	2.0		2.0		0.0	SPARE	20 / 1	16	
	17	20 / 1	SPARE	0.0			0.0	0.0	SPARE	20 / 1	18	
	19	20 / 1	SPARE	0.0	0.0			0.0	SPARE	20 / 1	20	
	21		SPACE	0.0		0.0		0.0	SPACE		22	
	23		SPACE	0.0			0.0	0.0	SPACE		24	
	25		SPACE	0.0	0.0			0.0	SPACE		26	
	27		SPACE	0.0		0.0		0.0	SPACE		28	
	29		SPACE	0.0			0.0	0.0	SPACE		30	
					309.3	290.4	259.0					

* GFCI BREAKER
**PROVIDE A CIRCUIT BREAKER CAPABLE OF BEING LOCKED IN THE OPEN POSITION
CONTRACTOR SHALL SUPPLY APPROPRIATE FRAME RATING TO ACCOMMODATE FEEDER WIRE SIZE AND BRANCH CIRCUIT WIRES FOR ALL BEAKERS ON THIS PROJECT

PANEL "RE" 40 A MCB ISOLATED GROUND BAR

SERVICE 208/120V, 3ø, 4 WIRE AIC 22,000 NEMA 3R

CONDUIT & WIRE	CRT#	BKR / P	ITEM DESCRIPTION	AMPS	A	B	C	AMPS	ITEM DESCRIPTION	BKR / P	CRT#	CONDUIT & WIRE
1 - 3/4"C w/ 2-#12 + 1-#12(G)EA	1	20 / 1	EXISTING LIGHTS	10.0	10.0			0.0	SPARE	20 / 1	2	
1 - 3/4"C w/ 2-#12 + 1-#12(G)EA	3	20 1	EXISTING PLUGS	6.0		6.0		0.0	SPARE	20 / 1	4	
1 - 3/4"C w/ 2-#12 + 1-#12(G)EA	5	20 / 1	EXISTING RADIO EQPM	10.0			10.0	0.0	SPARE	20 / 1	6	
	7	20 1	SPARE	0.0	0.0			0.0	SPARE	20 / 1	8	
	9	20 / 1	SPARE	0.0		0.0		0.0	SPARE	20 / 1	10	
	11	20 1	SPARE	0.0			0.0	0.0	SPARE	20 / 1	12	
					10.0	6.0	10.0					

* GFCI BREAKER
**PROVIDE A CIRCUIT BREAKER CAPABLE OF BEING LOCKED IN THE OPEN POSITION
CONTRACTOR SHALL SUPPLY APPROPRIATE FRAME RATING TO ACCOMMODATE FEEDER WIRE SIZE AND BRANCH CIRCUIT WIRES FOR ALL BEAKERS ON THIS PROJECT

PANEL "AE" 250 A MCB ISOLATED GROUND BAR

SERVICE 208/120V, 3ø, 4 WIRE AIC 22,000 NEMA 1

CONDUIT & WIRE	CRT#	BKR / P	ITEM DESCRIPTION	AMPS	A	B	C	AMPS	ITEM DESCRIPTION	BKR / P	CRT#	CONDUIT & WIRE
1 - 3/4"C w/ 3-#8 + 1-#10(G)EA	1	45 / 3	AHU-1	37.0	60.9			23.9	HP-1	40 / 3	2	1 - 3/4"C w/ 3-#8 + 1-#10(G)EA
	3			37.0		60.9		23.9			4	
	5			37.0			60.9	23.9			6	
1 - 3/4"C w/ 3-#12 + 1-#12(G)EA	7	15 / 2	IU-1	0.4	6.8			6.4	CU-1	15 / 2	8	1 - 3/4"C w/ 3-#12 + 1-#12(G)EA
	9			0.4		6.8		6.4			10	
1 - 3/4"C w/ 3-#10 + 1-#10(G)EA	11	30 / 2	EWH-65	21.0			24.0	3.0	MODULAR FURNITURE	20 / 1	12	2.2 MOD. FURN. WIRE STANDARD
	13			21.0	24.0			3.0	MODULAR FURNITURE	20 / 1	14	2.2 MOD. FURN. WIRE STANDARD
1 - 3/4"C w/ 2-#12 + 1-#12(G)EA	15	20 / 1	INT. MEETING RM LIGHTS	6.5		9.5		3.0	MODULAR FURNITURE	20 / 1	16	2.2 MOD. FURN. WIRE STANDARD
1 - 3/4"C w/ 2-#12 + 1-#12(G)EA	17	20 / 1	REST ROOM INT. LIGHTS	7.6			10.6	3.0	IG MODULAR FURNITURE	20 / 1	18	2.2 MOD. FURN. WIRE STANDARD
	19	20 / 1	SPARE	0.0	10.0			10.0	REFRIGERATOR	20 / 1	20	1 - 3/4"C w/ 2-#12 + 1-#12(G)EA
1 - 3/4"C w/ 2-#12 + 2-#12(G)EA	21	20 / 1	PROJECTOR PLUGS	6.0		9.0		3.0	TANK MGMT. CONSOLE	20 / 1	22	1 - 3/4"C w/ 2-#12 + 2-#12(G)EA
1 - 3/4"C w/ 2-#12 + 1-#12(G)EA	23	20 / 1	METING RM PLUGS	4.5			9.0	4.5	ASSIST SUPERVISOR PLUGS	20 / 1	24	1 - 3/4"C w/ 2-#12 + 2-#12(G)EA
1 - 3/4"C w/ 2-#12 + 1-#12(G)EA	25	15 / 1	EF-1	4.4	8.9			4.5	SUPERVISOR PLUGS	20 / 1	26	1 - 3/4"C w/ 2-#12 + 2-#12(G)EA
1 - 3/4"C w/ 2-#12 + 1-#12(G)EA	27	20 / 1	OFFICE INT. LIGHTS	12.0		13.5		1.5	MECH/ELEC RM PLUG	20 / 1	28	1 - 3/4"C w/ 2-#12 + 1-#12(G)EA
	29	20 / 1	SPARE	0.0			4.5	4.5	RESTROOM PLUGS	20 / 1	30	1 - 3/4"C w/ 2-#12 + 1-#12(G)EA
	31	30 / 1	SPARE	0.0	0.0			0.0	SPARE	20 / 1	32	
	33	30 / 2	SPARE	0.0		0.0		0.0	SPARE	20 / 1	34	
	35			0.0			0.0	0.0	SPARE	20 / 1	36	
1 - 3/4"C w/ 3-#8 + 1-#10(G)EA	37	45 / 3	AHU-2	37.0	60.9			23.9	HP-2	40 / 3	38	1 - 3/4"C w/ 3-#8 + 1-#10(G)EA
	39			37.0		60.9		23.9			40	
	41			37.0			60.9	23.9			42	
					171.5	160.6	169.9					

* GFCI BREAKER
**PROVIDE A CIRCUIT BREAKER CAPABLE OF BEING LOCKED IN THE OPEN POSITION
CONTRACTOR SHALL SUPPLY APPROPRIATE FRAME RATING TO ACCOMMODATE FEEDER WIRE SIZE AND BRANCH CIRCUIT WIRES FOR ALL BEAKERS ON THIS PROJECT

PANEL "FE" 50 A MCB ISOLATED GROUND BAR

SERVICE 208/120V, 3ø, 4 WIRE AIC 22,000 NEMA 3R

CONDUIT & WIRE	CRT#	BKR / P	ITEM DESCRIPTION	AMPS	A	B	C	AMPS	ITEM DESCRIPTION	BKR / P	CRT#	CONDUIT & WIRE
1 - 3/4"C w/ 2-#12 + 1-#12(G)EA	1	20 / 2	DIESEL PUMP	11.0	11.0			0.0	TVSS	30 / 3	2	
	3			11.0		11.0		0.0			4	
	5		SHUNT TRIP	0.0			0.0	0.0			6	
1 - 3/4"C w/ 2-#12 + 1-#12(G)EA	7	20 / 2	GASOLINE PUMP	11.0	13.0			2.0	DIESEL DISPENSER	20 / 2	8	1 - 3/4"C w/ 2-#12 + 1-#12(G)EA
	9			11.0		11.0		0.0	SWITCHED NEUTRAL		10	
	11		SHUNT TRIP	0.0			0.0	0.0	SHUNT TRIP		12	
1 - 3/4"C w/ 2-#12 + 1-#12(G)EA	13	20 / 2	LPG FUEL STATION	10.0	12.0			2.0	GASOLINE DISPENSER	20 / 1	14	1 - 3/4"C w/ 2-#12 + 1-#12(G)EA
	15		SWITCHED NEUTRAL	10.0		10.0		0.0	SWITCHED NEUTRAL		16	
	17		SHUNT TRIP	0.0			0.0	0.0	SHUNT TRIP		18	
	19	20 / 1	SPARE	0.0	2.0			2.0	FUTURE FUEL MGMT.	20 / 1	20	1 - 3/4"C w/ 2-#12 + 1-#12(G)EA
	21		SWITCHED NEUTRAL	0.0		0.0		0.0	SWITCHED NEUTRAL		22	
	23		SHUNT TRIP	0.0			0.0	0.0	SHUNT TRIP		24	
	25	20 / 1	SPARE	0.0	0.0			0.0	SPARE	20 / 1	26	
	27	20 / 1	SPARE	0.0		1.0		1.0	VSMART MODULE	20 / 1	28	1 - 3/4"C w/ 2-#12 + 3-#12(G)EA
1 - 3/4"C w/ 2-#12 + 1-#12(G)EA	29	20 / 1	EPO/ SHUNT TRIP	2.0			4.0	2.0	REMOTE ALARM	20 / 1	30	1 - 3/4"C w/ 2-#12 + 1-#12(G)EA
					38.0	33.0	4.0					

* GFCI BREAKER
**PROVIDE A CIRCUIT BREAKER CAPABLE OF BEING LOCKED IN THE OPEN POSITION
CONTRACTOR SHALL SUPPLY APPROPRIATE FRAME RATING TO ACCOMMODATE FEEDER WIRE SIZE AND BRANCH CIRCUIT WIRES FOR ALL BEAKERS ON THIS PROJECT

PANEL "BE" 125 A MCB ISOLATED GROUND BAR

SERVICE 208/120V, 3ø, 4 WIRE AIC 35,000 NEMA 1

CONDUIT & WIRE	CRT#	BKR / P	ITEM DESCRIPTION	AMPS	A	B	C	AMPS	ITEM DESCRIPTION	BKR / P	CRT#	CONDUIT & WIRE
1 - 3/4"C w/ 3-#8 + 1-#10(G)EA	1	50 / 2	50 AMP	50.0	50.0			0.0	SPARE	20 / 1	2	
	3		WELDING PLUG	50.0		50.0		0.0	SPARE	20 / 1	4	
	5	20 1	SPARE	0.0			0.0	0.0	SPARE	20 / 1	6	
1 - 3/4"C w/ 3-#8 + 1-#10(G)EA	7	50 / 3	EQUIPMENT SHOP	25.3	25.3			0.0	SPARE	20 / 1	8	
	9		7.5 HP	25.3		29.3		4.0	HTR-3	20 / 1	10	1 - 3/4"C w/ 2-#12 + 1-#12(G)EA
	11		AIR COMPRESSOR	25.3			33.3	8.0	HTR-1 & HTR-2	20 / 1	12	1 - 3/4"C w/ 2-#12 + 1-#12(G)EA
	13	20 / 1	SPARE	0.0	4.5			4.5	SHOP RECEPTACLES	20 / 1	14	1 - 3/4"C w/ 2-#12 + 1-#12(G)EA
	15	20 / 1	SPARE	0.0		4.5		4.5	SHOP RECEPTACLES	20 / 1	16	1 - 3/4"C w/ 2-#12 + 1-#12(G)EA
1 - 3/4"C w/ 2-#10 + 1-#10(G)EA	17	25 / 1	EF-7	13.8			28.8	15.0	ICE MAKER PLUG	20 / 1	18	1 - 3/4"C w/ 2-#12 + 1-#12(G)EA
1 - 3/4"C w/ 2-#12 + 1-#12(G)EA	19	20 / 1	SIRENS / WARING LIGHTS	2.0	5.0			3.0	WIRE CLOSET PLUGS	20 / 1	20	1 - 3/4"C w/ 2-#12 + 1-#12(G)EA
1 - 3/4"C w/ 2-#12 + 1-#12(G)EA	21	20 / 1	GAS DETECTION CONSOLE	2.0		5.0		3.0	WIRE CLOSET PLUGS	20 / 1	22	1 - 3/4"C w/ 2-#12 + 1-#12(G)EA
1 - 3/4"C w/ 2-#12 + 1-#12(G)EA	23	20 / 1	VECHICLE STORAGE PLUGS	3.0			13.0	10.0	EQUIPMENT SHOP LIGHTS	20 / 1	24	1 - 3/4"C w/ 2-#12 + 1-#12(G)EA
	25	20 / 1	SPARE	0.0	0.0			0.0	SPARE	20 / 1	26	
	27	20 / 1	SPARE	0.0		0.0		0.0	SPARE	20 / 1	28	
	29	20 / 1	SPARE	0.0			0.0	0.0	SPARE	20 / 1	30	
					84.8	88.8	75.1					

* GFCI BREAKER
**PROVIDE A CIRCUIT BREAKER CAPABLE OF BEING LOCKED IN THE OPEN POSITION
CONTRACTOR SHALL SUPPLY APPROPRIATE FRAME RATING TO ACCOMMODATE FEEDER WIRE SIZE AND BRANCH CIRCUIT WIRES FOR ALL BEAKERS ON THIS PROJECT

CADFILE: T:\MNTF\MOD2FTW\CBC4704-00-83702-77-47040083\Vcad\prototypical pdf\edcouch\cad\MEP\ELEC\E4_1.dwg Plotted: Fri, Aug. 07, 2009 @ 11:31 AM By: MBAZAN

Texas Department of Transportation
125 E. 11th Street
Austin, Texas 78701-2483
(512) 416-3048
Copyright © 2009 Texas Department of Transportation

THIS DOCUMENT IS RELEASED FOR THE PURPOSE OF INFORMATION ONLY
NOT FOR REGULATORY APPROVAL, PERMITTING, OR CONSTRUCTION.

EDCOUCH MAINTENANCE FACILITY
HIDALGO COUNTY, EDCOUCH TEXAS
PHARR DISTRICT

Revisions

Drawn by: CON
Project No.
Date 05-26-2009
Sheet No.
E4.2
of 12 E sheets

ELECTRICAL PANELBOARD SCHEDULES -2

NOTE: THIS DRAWING WAS CREATED FOR PRODUCTION ON 22" x 34" SHEET SIZE. DO NOT SCALE PRINTS.

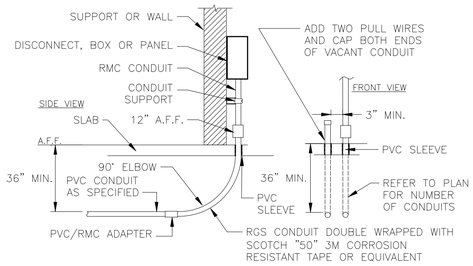

1 ELECTRICAL STUB UP TO PANEL
SCALE: NOT TO SCALE

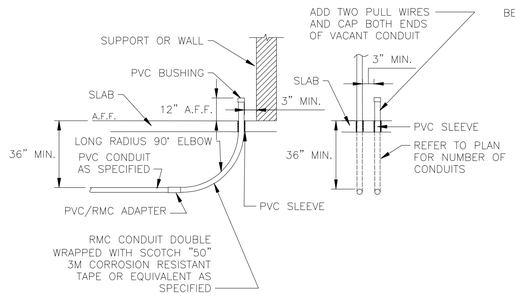

2 VOICE DATA STUB UP
SCALE: NOT TO SCALE

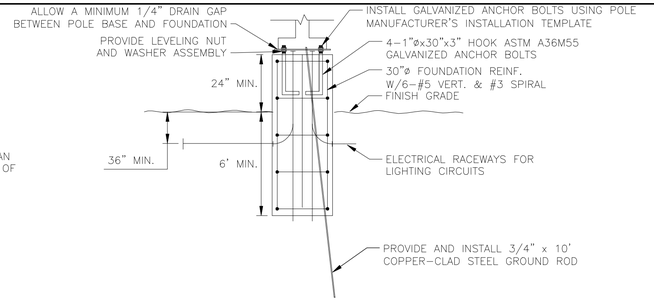

3 LIGHT POLE FOUNDATION DETAIL
SCALE: NOT TO SCALE

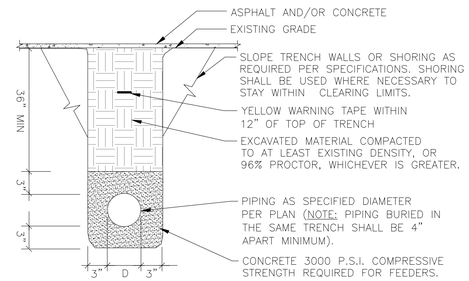

4 ELECTRICAL PAVED AREAS TYPICAL
SCALE: NOT TO SCALE

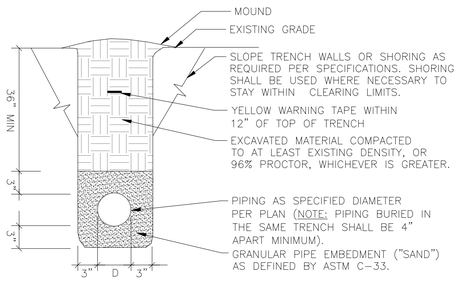

5 ELECTRICAL UNPAVED AREAS TYPICAL
SCALE: NOT TO SCALE

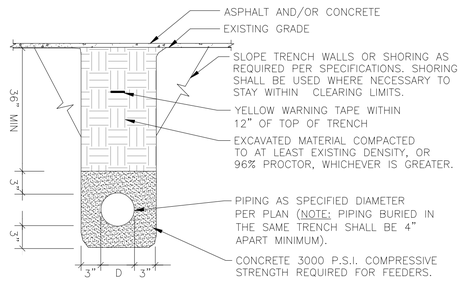

6 VOICE DATA PAVED AREAS TYPICAL
SCALE: NOT TO SCALE

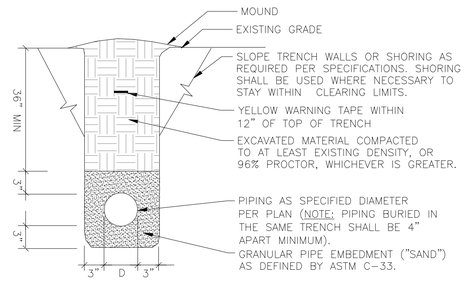

7 VOICE DATA UNPAVED AREAS TYPICAL
SCALE: NOT TO SCALE

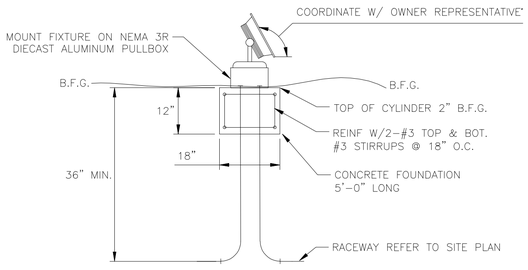

8 SIGN LIGHT ON CONCRETE PEDESTAL
SCALE: NOT TO SCALE

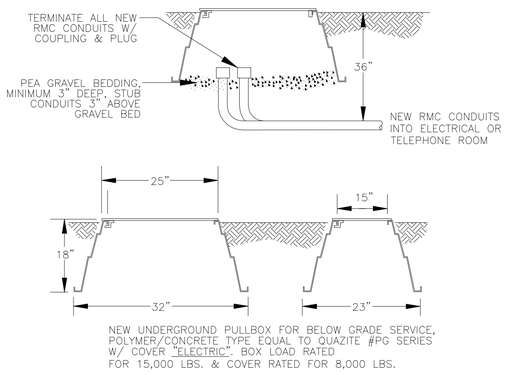

9 GROUND BOX
SCALE: NOT TO SCALE

ELECTRICAL DETAILS

NOTE: THIS DRAWING WAS CREATED FOR PRODUCTION ON 22" x 34" SHEET SIZE. DO NOT SCALE PRINTS.

Texas Department of Transportation
125 E. 11th Street
Austin, Texas 78701-2483
(512) 416-3000

Copyright © 2005 Texas Department of Transportation

THIS DOCUMENT IS RELEASED FOR THE PURPOSE OF
INFORMATION ONLY
NOT FOR REGULATORY APPROVAL, PERMITTING, OR CONSTRUCTION.

EDCOUCH MAINTENANCE FACILITY
HIDALGO COUNTY, EDCOUCH TEXAS
PHARR DISTRICT

Revisions

Drawn by: CON
Project No.
Date 05-26-2009
Sheet No.

E5.1
of 12 E sheets

CADFILE: T:\MNTFM\D0627TWC\SC-0704-00-057\02-77-4704\00837\Acad\layout\layout1.pdf#textcount\Acad\MEP\ELEC\EL_1.dwg Plotted: Fri, Aug. 07, 2009 @ 11:22 AM By: MBAZAN

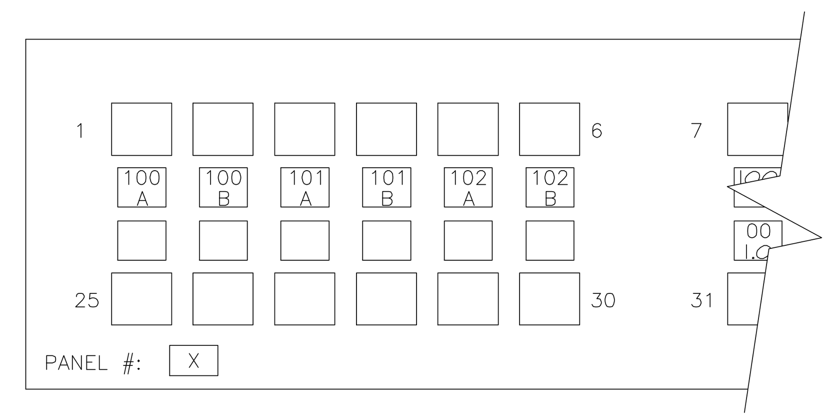

TYPICAL CATEGORY 5 PATCH PANEL LABELING

1 SCALE: NOT TO SCALE

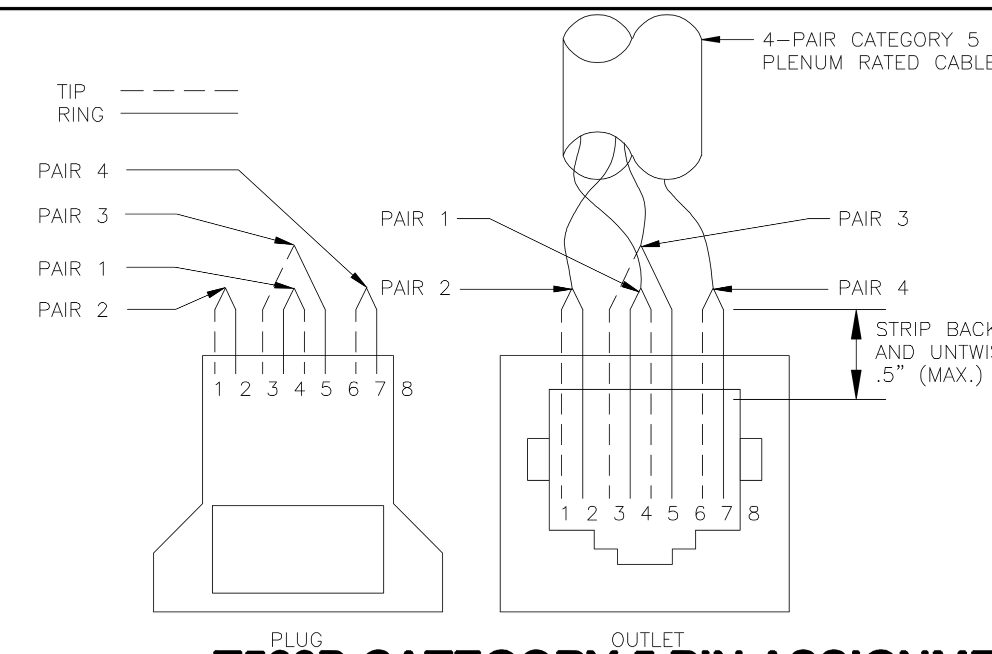

PAIR	COLOR
1	WHITE/BLUE
2	WHITE/ORANGE
3	WHITE/GREEN
4	WHITE/BROWN
5	WHITE/SLATE
6	RED/BLUE
7	RED/ORANGE
8	RED/GREEN
9	RED/BROWN
10	RED/SLATE
11	BLACK/BLUE
12	BLACK/ORANGE
13	BLACK/GREEN
14	BLACK/BROWN
15	BLACK/SLATE
16	YELLOW/BLUE
17	YELLOW/ORANGE
18	YELLOW/GREEN
19	YELLOW/BROWN
20	YELLOW/SLATE
21	VIOLET/BLUE
22	VIOLET/ORANGE
23	VIOLET/GREEN
24	VIOLET/BROWN
25	VIOLET/SLATE

NOTE:
4 PAIR STATION CABLES SHALL HAVE 8-10" OF SLACK AT OUTLET.

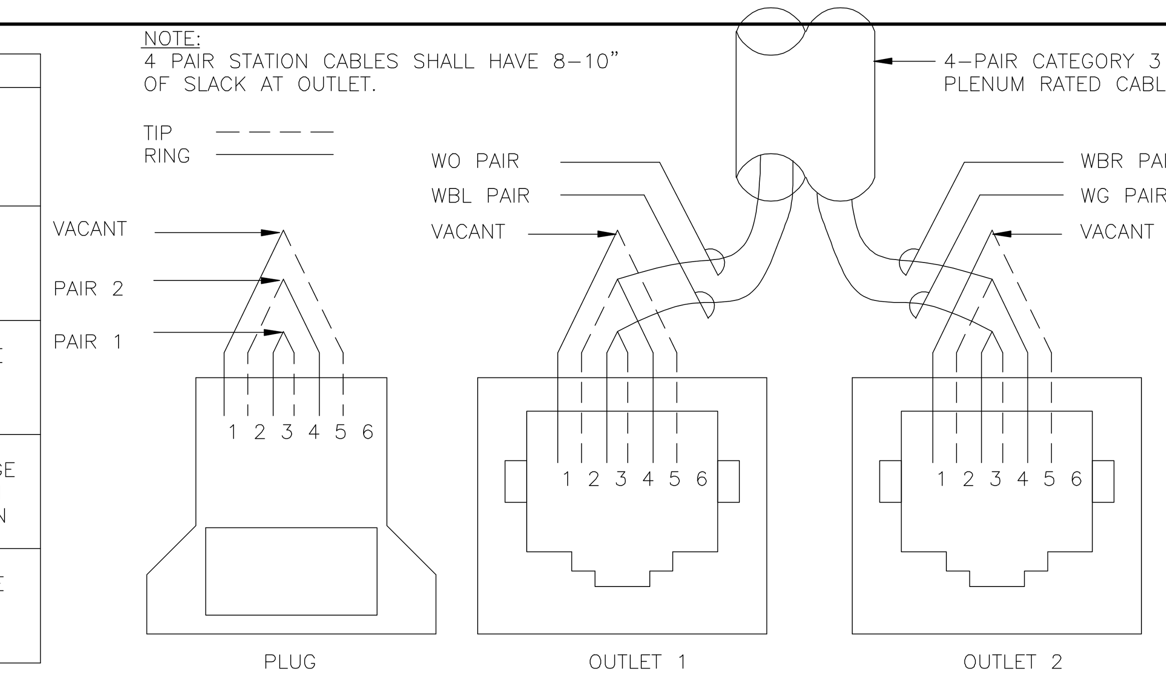

T568B CATEGORY 5 PIN ASSIGNMENT & STANDARD TELEPHONE COLOR CODES & USOC CATERGORY 3 PINN ASSIGNMENTS

2 SCALE: NOT TO SCALE

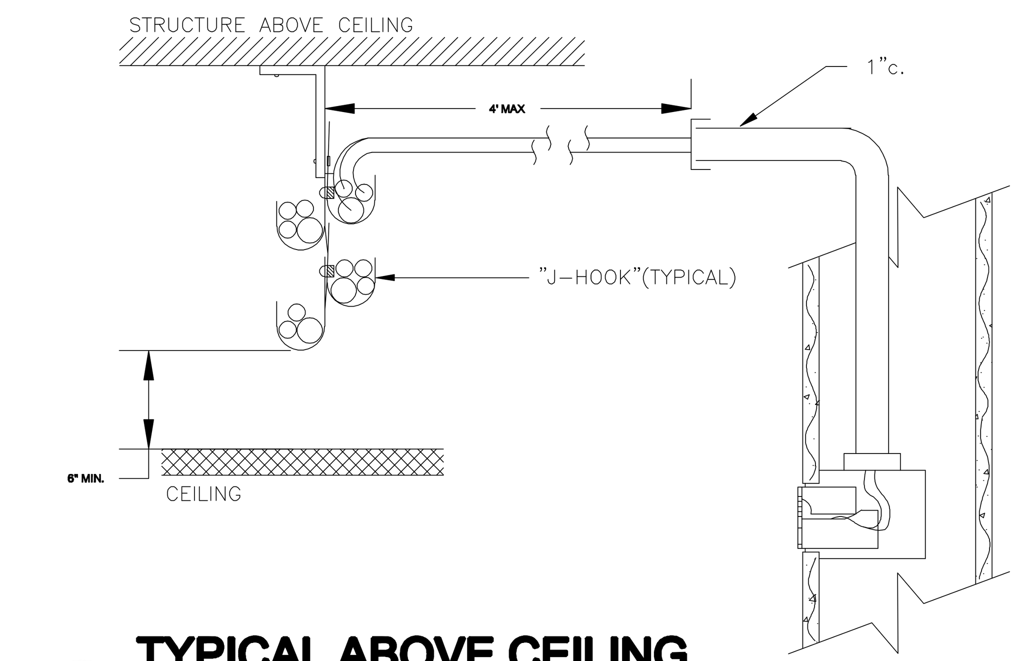

TYPICAL ABOVE CEILING CABLE ROUTING

3 SCALE: NOT TO SCALE

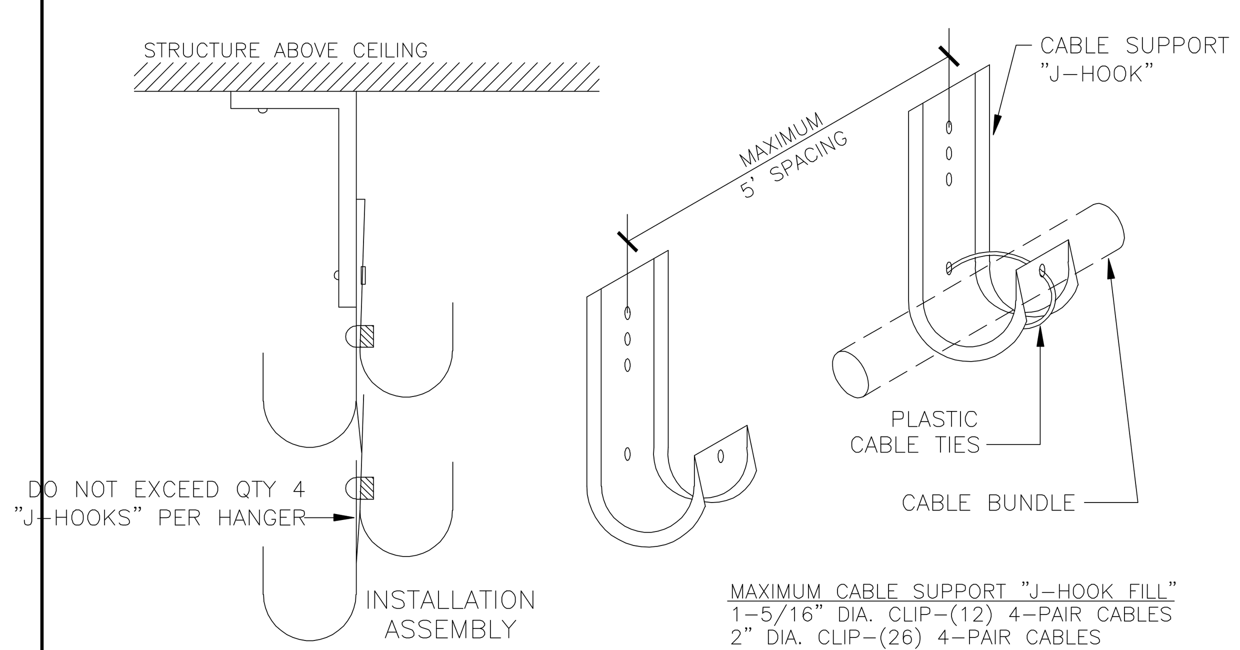

J-HOOK OPEN TOP CABLE SUPPORTS

4 SCALE: NOT TO SCALE

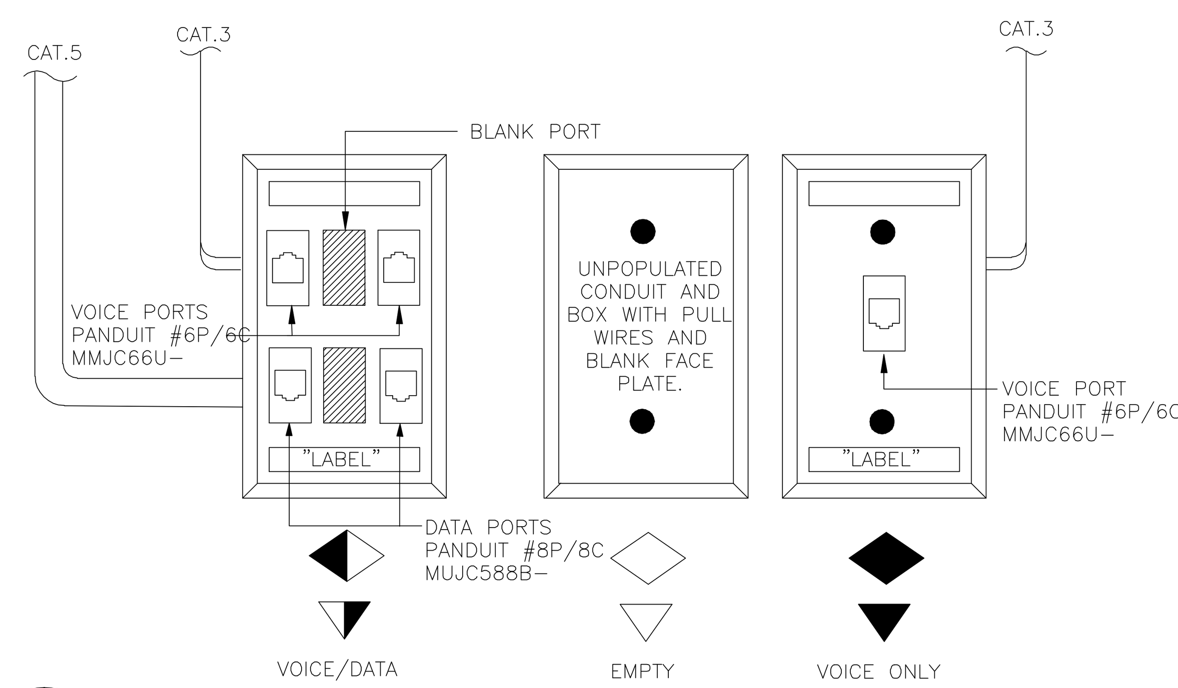

MODULAR OUTLET CONFIGURATION

5 SCALE: NOT TO SCALE

CADFILE: T:\MNTFMD\02FTWCBC\704-00-537\02-77-070400537\Acad\prototypical pdfs\edcouch\Acad\MEP\ELEC\E5_2.dwg Plotted: Fri, Aug. 07, 2009 @ 11:23 AM By: MBAZAN

Texas Department of Transportation
125 E. 11th Street
Austin, Texas 78701-2483
(512) 416-3040

Copyright © 2005 Texas Department of Transportation

THIS DOCUMENT IS RELEASED FOR THE PURPOSE OF INFORMATION ONLY
NOT FOR REGULATORY APPROVAL, PERMITTING, OR CONSTRUCTION.

EDCOUCH MAINTENANCE FACILITY

HIDALGO COUNTY, EDCOUCH TEXAS
PHARR DISTRICT

Revisions

Drawn by:
CON

Project No.

Date
05-26-2009

Sheet No.
E5.2
of 12 E sheets

VOICE/DATA DETAILS

NOTE: THIS DRAWING WAS CREATED FOR PRODUCTION ON 22" x 34" SHEET SIZE. DO NOT SCALE PRINTS.

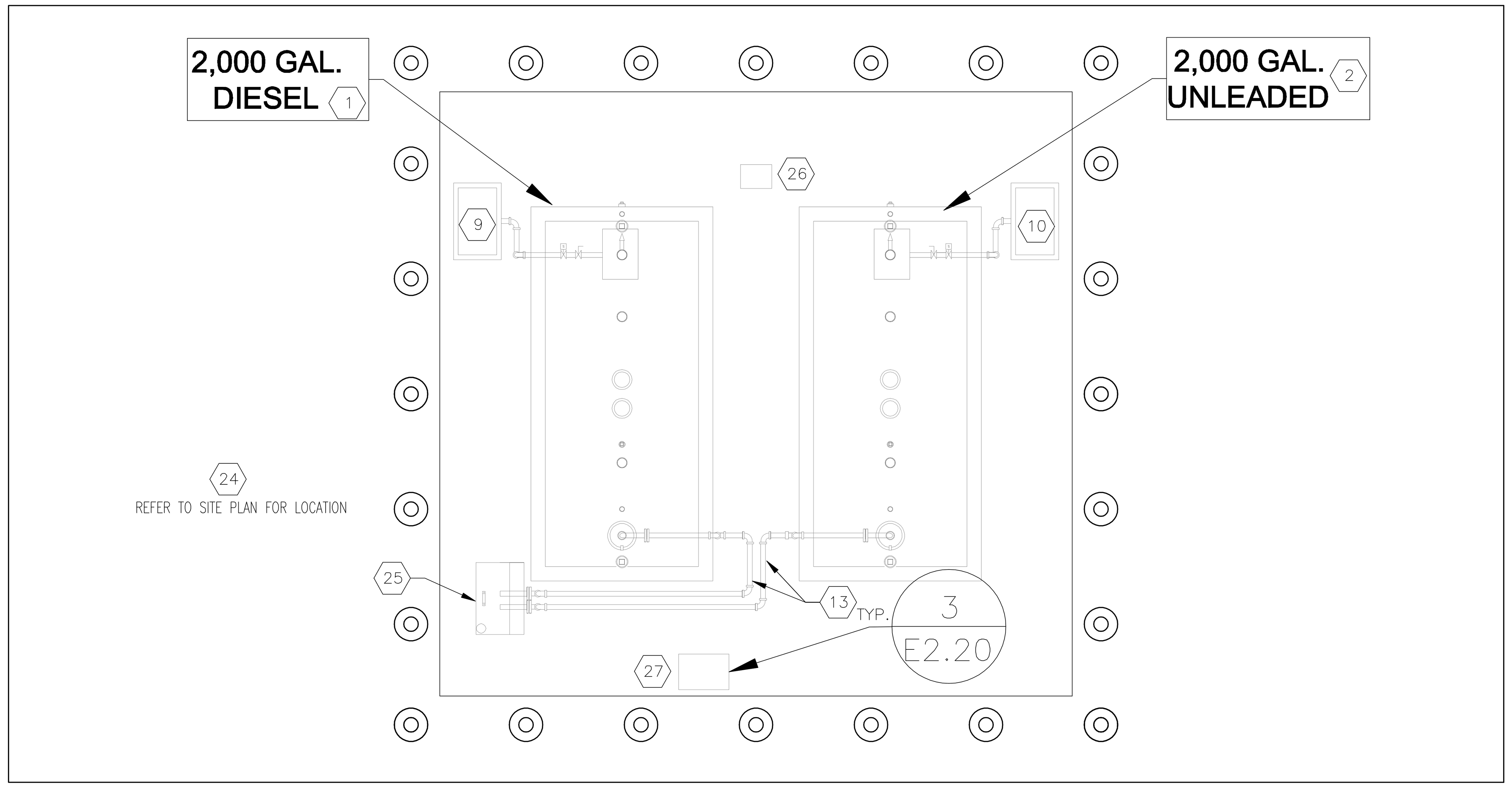

1 FUEL STATION PLAN
SCALE: 1/4" = 1'-0"

REFER TO ARCHITECTURAL DRAWINGS FOR LOCATION AND ORIENTATION

WARNING: TANKS ARE SHOWN WITH DIFFERENT SIZE TANKS IN ORDER TO SHOW ACCESSORIES WITH ONE ELEVATION ON BOTH TANKS THIS ELEVATION IS NOT TO SCALE

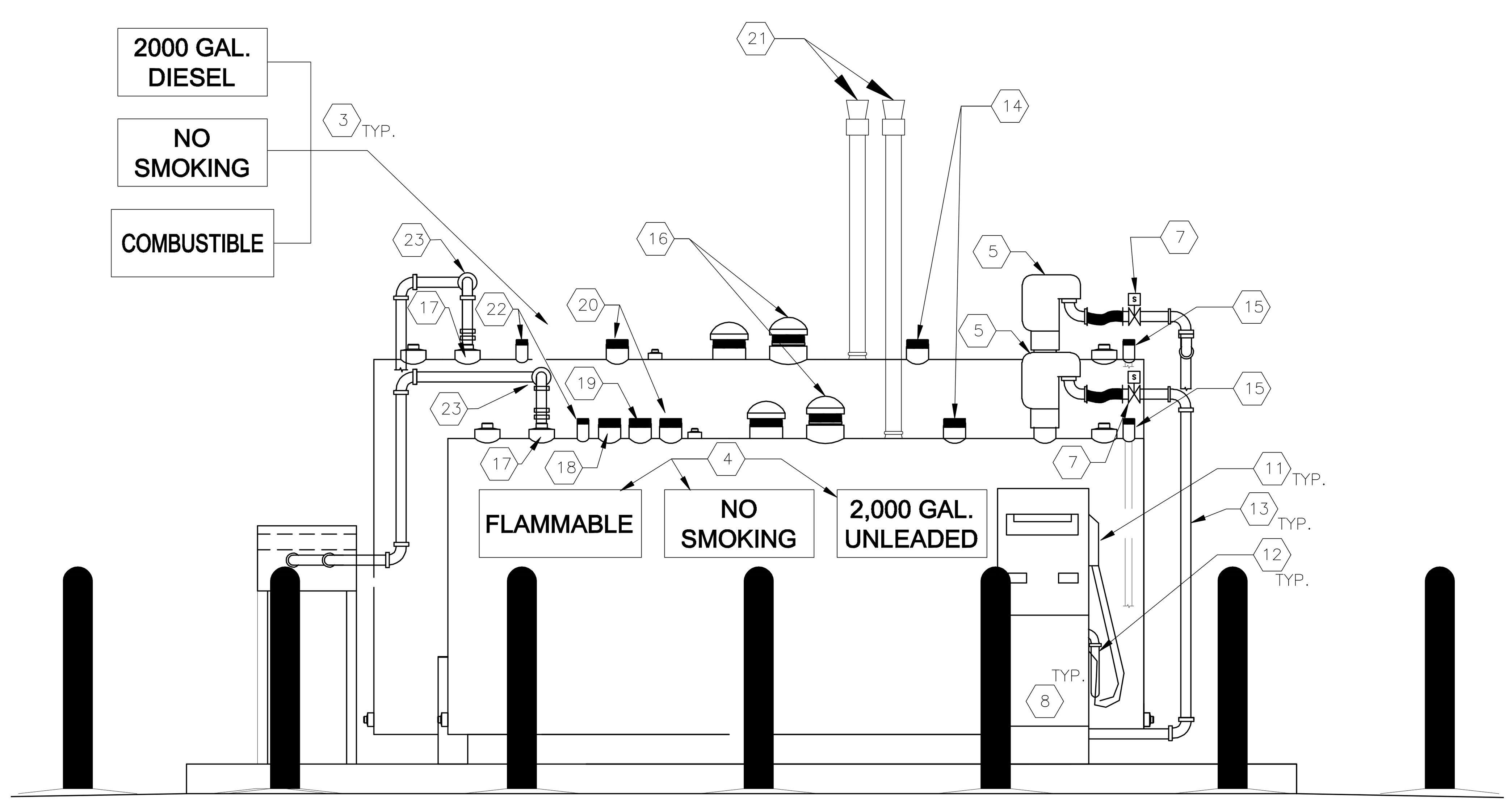

2 FUEL STATION ELEVATIONS
SCALE: NOT TO SCALE

FUEL STATION NOTES

1. CONTRACTOR SHALL BE TCEQ CERTIFIED FOR UNDERGROUND TANK INSTALLATIONS AND REMOVALS, AND CERTIFIED BY THE TANK MANAGEMENT SYSTEM MANUFACTURER. CONTRACTOR SHALL PROVIDE CERTIFICATIONS WITH SUBMITTALS. SPECIFICATION SECTION 11140 – FUEL DISPENSING SYSTEM IS PART OF THE ELECTRICAL CONTRACTORS SCOPE OF WORK.
2. NOTE THAT CONSTRUCTION DRAWINGS ARE DIAGRAMMATIC BY THEIR NATURE, AND ARE NOT INTENDED TO SHOW EVERY CONNECTION IN DETAIL OR EVERY VENT PIPE, TANK PENETRATION OR DEVICE IN ITS EXACT LOCATION. FEATURES AND COMPONENTS NOT SHOWN ARE SUBJECT TO THE REQUIREMENTS OF STANDARDS REFERENCED ELSEWHERE IN THE CONSTRUCTION DOCUMENTS. THE CONTRACTOR SHALL COORDINATE THE VARIOUS TRADES IN ORDER TO AVOID INTERFERENCE BETWEEN DEVICES IT IS THE CONTRACTORS RESPONSIBILITY TO ENSURE A COMPLETE WORKING SYSTEM WHICH SHALL COMPLY WITH NFPA 30, NFPA 30A, AND NFPA 70, AND TEXAS COMMISSION ON ENVIRONMENTAL QUALITY, (TCEQ) FOR ABOVEGROUND STORAGE TANKS. IT IS THE CONTRACTORS RESPONSIBILITY TO NOTIFY TCEQ OF INTENT TO CONSTRUCT AND OBTAIN REGISTRATION FROM TCEQ. CONTRACTOR SHALL COMPLY WITH TCEQ, EPA AND NFPA REQUIREMENTS.
3. CONTRACTOR SHALL PROVIDE FIREGUARD ROUND DOUBLE WALL WITH THERMAL INSULATION FOR FIRE PROTECTION. TANKS SHALL BE 2–HOUR FIRE RATED. THE TANK SHALL BE LISTED AND LABELED BY UL–2085. A SAMPLE COPY OF THE TANK'S LABEL AND CERTIFICATION MUST BE INCLUDED WITH THE SUBMITTALS, OR APPROVED EQUAL. RECTANGULAR TANKS ARE PROHIBITED DUE TO PONDING ISSUES.
4. CONTRACTOR SHALL FOLLOW THE MANUFACTURER'S RECOMMENDATIONS FOR INSTALLATION REQUIREMENTS. IT IS THE CONTRACTORS RESPONSIBILITY TO INSTALL AND PROVIDE A FULLY FUNCTIONAL SYSTEM INCLUDING ALL THE NECESSARY FITTINGS AND HARDWARE SENSORS, PROBES, TANK LEVEL MONITORING AND LEAK SENSING SYSTEM, RISERS, RISER CAPS AND ATTACHMENTS FOR A COMPLETE FUNCTIONING SYSTEM.
5. ALL PIPING SHALL BE BLACK PIPE MEETING ASTM A–106 STANDARDS. CONTRACTOR SHALL PAINT ALL PIPING WITH A RUST PROHIBITIVE ENAMEL. THE COLOR SHALL BE FIRE ENGINE RED.
6. CONTRACTOR SHALL SUBMIT A COPY OF THE TCEQ ABOVEGROUND FUEL STORAGE TANK CONSTRUCTION NOTIFICATION FORM SUBMITTED TO TCEQ FOR GASOLINE STORAGE TANKS LARGER THAN 1,100 GAL.

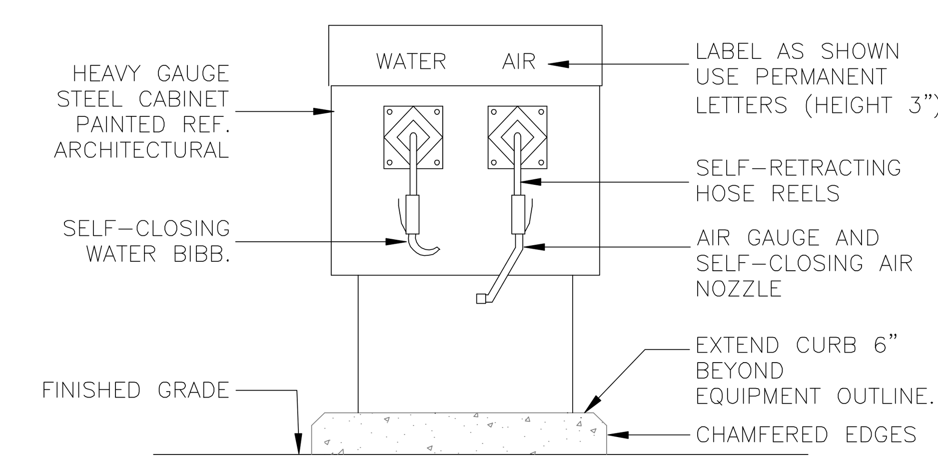

3 AIR/WATER PEDESTAL
SCALE: NOT TO SCALE

KEYED NOTE "⬡"

1. PROVIDE A 2,000 GALLON DIESEL.
2. PROVIDE A 2,000 GALLON UNLEADED GASOLINE.
3. PROVIDE SIGNAGE ON TANK VISIBLE FROM 100FT TO READ THE FOLLOWING, " DIESEL" , "NO SMOKING" , "COMBUSTIBLE", 2,000 GALLONS ON ALL FOUR SIDES.
4. PROVIDE SIGNAGE ON TANK VISIBLE FROM 100FT TO READ THE FOLLOWING, " UNLEADED" , "NO SMOKING" , "FLAMMABLE", 2,000 GALLONS ON ALL FOUR SIDES.
5. PROVIDE AND INSTALL A 208V/1ø 1 1/2 HP SUBMERSIBLE PUMP. WITH STAINLESS UL LISTED FLEXIBLE CONNECTION.
6. NOT USED.
7. PROVIDE A 2" SOLENOID VALVE, 120V WITH LINE PRESSURE RELIEF MORRISON 710 SERIES. PROVIDE POWER FROM DISPENSER.
8. PROVIDE REMOTE BASE BY BRAVO SYSTEMS B–8600 SERIES WITH SHEAR VALVE OPW#10 SERIES.
9. PROVIDE MECHANICAL REMOTE DISPENSER BY GASBOY HIGH FLOW SERIES OR EQUAL. DESIGN FOR DISPENSING DIESEL. IF EQUIPPED WITH INTERNAL SPIN ON FILTER PROVIDE BLANK FILTER.
10. PROVIDE MECHANICAL REMOTE DISPENSER BY GASBOY HIGH FLOW SERIES OR EQUAL. DESIGN FOR DISPENSING UNLEADED GASOLINE. PROVIDE IF EQUIPPED WITH INTERNAL SPIN ON FILTER PROVIDE BLANK FILTER.
11. PROVIDE 1" U.L. LISTED HOSE, 1" HOSE SWIVEL, 1" BREAKAWAY/WHIP HOSE, HIGH FLOW AUTOMATIC NOZZLES, HOSE RETRIEVER WITH CRADLE. PROVIDING A FULLY FUNCTIONAL SYSTEM ON EACH BOTH REMOTE DISPENSER.
12. PROVIDE A PARTICULATE SPIN–OFF FILTER ON EACH REMOTE DISPENSER.
13. ALL PIPING, JOINTS, UNIONS AND FITTINGS SHALL BE 2" BLACK PIPE MEETING ASTM A–106 STANDARDS. SUPPORT ALL PIPING WITH GALVANIZED STEEL CHANNEL STRUT.
14. PROVIDE TANK LEVEL RIGID MONITOR PROBE PER OPW INTEGRATED TANK MONITORING SYSTEM SCHEDULE.
15. PROVIDE 2" MONITOR TUBE PROVIDE EXTERNAL LEAK SENSOR PER OPW INTEGRATED TANK MONITORING SYSTEM SCHEDULE.
16. PROVIDE 6" PRIMARY EMERGENCY VENT.
17. PROVIDE 4" NIPPLE W/ 2" MECHANICAL SHUT OFF VALVE SET AT 95%, OPW 61FSTOP–1000M ANODIZED COMPLETE WITH OPW61FT DROP TUBE TO PROVIDE SUBMERGED FILLING.
18. PROVIDE 4" NIPPLE CAP & SEAL AND MARK FOR FUTURE STAGE 1 VAPOR RECOVERY, (UNLEADED ONLY).
19. PROVIDE 4" SPARE NIPPLE CAP & AND MARK FOR FUTURE STAGE 2 VAPOR RECOVERY, (UNLEADED ONLY).
20. PROVIDE A 2" NIPPLE WITH CAP.
21. PROVIDE 2" VENT CAP AND RISER. VENT SHALL TERMINATE AT LEAST 12' ABOVE FINISHED FLOOR AND AT LEAST 2' ABOVE NEAREST STRUCTURE.
22. PROVIDE 2" NIPPLE WITH A OPW#83–0022 FILL CAP WITH TANK MEASURING STICK.
23. PROVIDE TANK INLET SPOUT ADAPTER WITH CROSSBAR OPW #633AST–2061 AND CAM LOCK COUPLER OPW #633B–0150. PROVIDE 2" FLANGED CONNECTION AT VALVE IN THE VERTICAL PLANE. TRANSITION TO 3" PIPE AT REMOTE FILL BOX FOR 3" POPPETED KAMVALOK ADAPTORS.
24. PROVIDE AND INSTALL 4FT A.F.F. RACK MOUNTED EXTERNAL AUDIBLE / VISIBLE ALARM BY OPW. INTEGRATED TANK LEVEL MONITORING AND LEAK SENSING SYSTEM SHALL TRIGGER THE REMOTE ALARM TO SEND AN AUDIBLE/VISIBLE ALARM WHEN A TANK REACHED THE 90% STORAGE CAPACITY AND/OR UPON LEAK DETECTION. REFER TO SITE PLAN FOR LOCATION.
25. PROVIDE A REMOTE FILL ABOVE GROUND STORAGE TANK SPILL CONTAINER OPW #6–211–R–30–2–B3–LD. PROVIDE TWO POPPETED KAMVALOK ADAPTORS AND ONE SPARE CONTAINING AN INTERNAL VITON SPRING LOADED VALVE ASSEMBLY OPW#1612AN–0300. PROVIDE TWO POPPETED KAMVALOK VITON COUPLERS AND ONE SPARE OPW#1712D–1095. PROVIDE TWO DUST PLUGS AND ONE SPARE OPW#634A–0180. PROVIDE TWO LOCKABLE DUST PLUGS AND ONE SPARE OPW#634BK–0100.
26. INSTALL PROVIDED FUEL MANAGEMENT SYSTEM BY OWNER REFER TO SCHEDULE SHEET E2.21.
27. PROVIDE A AIR/WATER PEDESTAL WITH CABINET WITH AT LEAST 25' OF WATER AND AIR HOSE WITH A TIRE PRESSURE GAUGE AND WATER SHUT OFF VAVLE. EXTEND 3/4" SOFT DRAWN TYPE "K" COPPER LINE UNDERSLAB AND UNDERPARKING LOT TO EQUIPMENT SHOP COMPRESSED AIR PIPING.

Texas Department of Transportation
125 E. 11th Street
Austin, Texas 78701-2483
(512) 416-3048

Copyright © 2005 Texas Department of Transportation

THIS DOCUMENT IS RELEASED FOR THE PURPOSE OF INFORMATION ONLY
NOT FOR REGULATORY APPROVAL, PERMITTING, OR CONSTRUCTION.

EDCOUCH
MAINTENANCE FACILITY
HIDALGO COUNTY, EDCOUCH TEXAS
PHARR DISTRICT

Revisions

Drawn by: CON
Project No.
Date 05-26-2009
Sheet No.
E2.20
of 12 E sheets

FUEL STATION PLAN - SCHEDULE & ELEVATIONS

NOTE: THIS DRAWING WAS CREATED FOR PRODUCTION ON 22" x 34" SHEET SIZE. DO NOT SCALE PRINTS.

CADFILE: T:\MNT\MD\02FTWCBC\704-00-537\02-77-470400537\cad\prototypical pdf\edcouch\cad\MEP\ELEC\E2_20_E2_21.dwg Plotted: Fri, Aug. 07, 2009 @ 11:28 AM By: MBAZAN

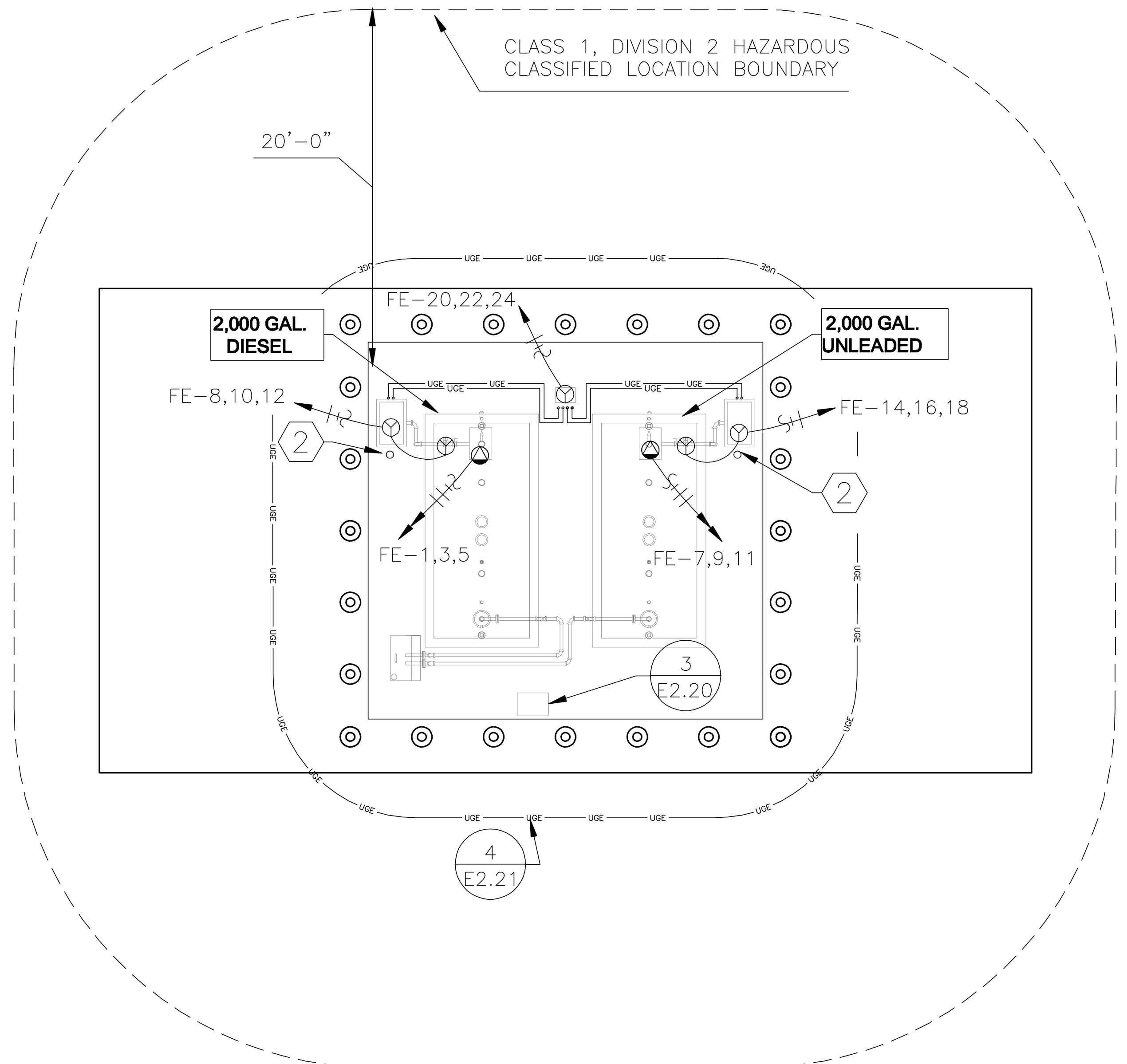

REFER TO ARCHITECTURAL DRAWINGS FOR LOCATION AND ORIENTATION

1 FUEL STATION POWER AND SPECIAL SYSTEMS
SCALE: 1/8" = 1'-0"

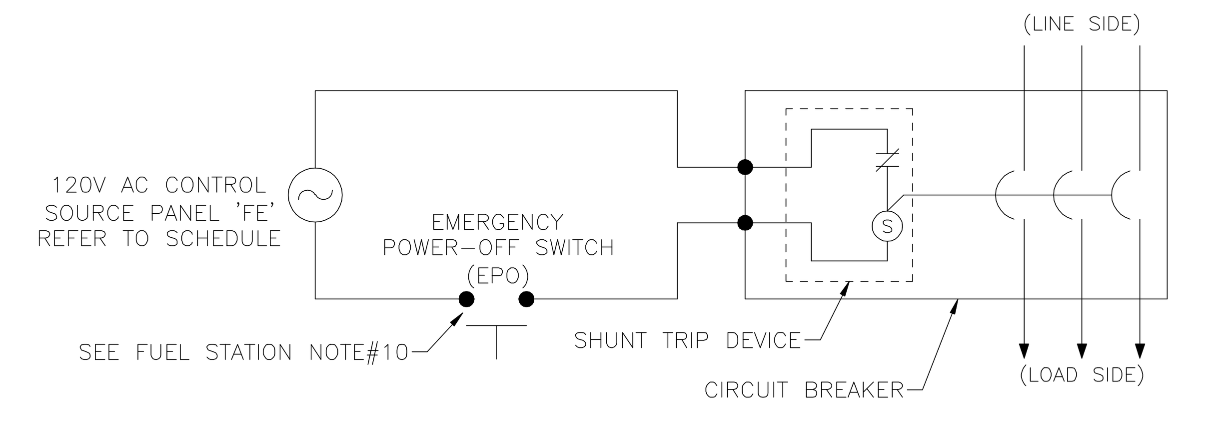

3 SHUNT TRIP WIRING DIAGRAM
SCALE: NOT TO SCALE

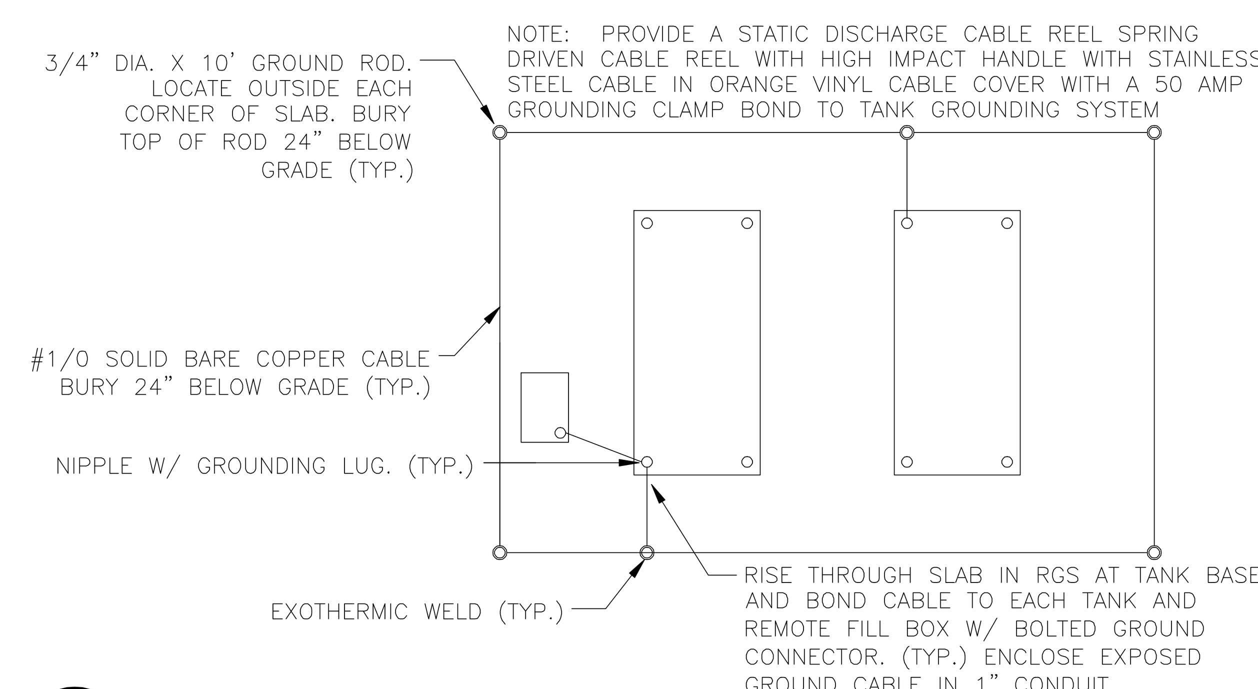

4 TANK GROUNDING SYSTEM
SCALE: NOT TO SCALE

Qty	Part Number	Description
	OPW TANK MONITORING SYSTEM SCHEDULE	
1	ISITE-INTPRT	iSite with Internal Printer
	Additional V-Smart Module components	
1	20-4344	V-Smart 12V Digital IS Module (for SiteSentinel Model Probes and all EECO or Petrovend Sensors)
	Accessories	
1	20-8312-ISITE	Output Module - used with the SiteSentinel iSite to provide external control functions in response to alarm conditions (up to 4 modules per console)
1	30-2015	External Alarm (Light/Buzzer/Silence Switch-Outdoor Rated) 110V
	SiteSentinel System Multi-Drop In-Tank Probes	
	Model 924 Magnetostrictive Probes Level 1 (-40C-+70C/-40F-+158F)	
2	30-0219	OPW Riser Cap and Collar 102mm (4" NPT thread) with grommet -Aluminum with snap in lockable lid.
2	30-B0-XX	Probe Verify Diameter/Height Tank
	Float Kits (Includes product/water float and probe cable)	
2	30-1514-02	2" (51mm) Stainless Steel Float kit (product/water) SG.82-.86
2	30-0230-S	Liquid Only Float Sensor for Containment Sump/Dispenser Pans, for Steel Tank Interstitial

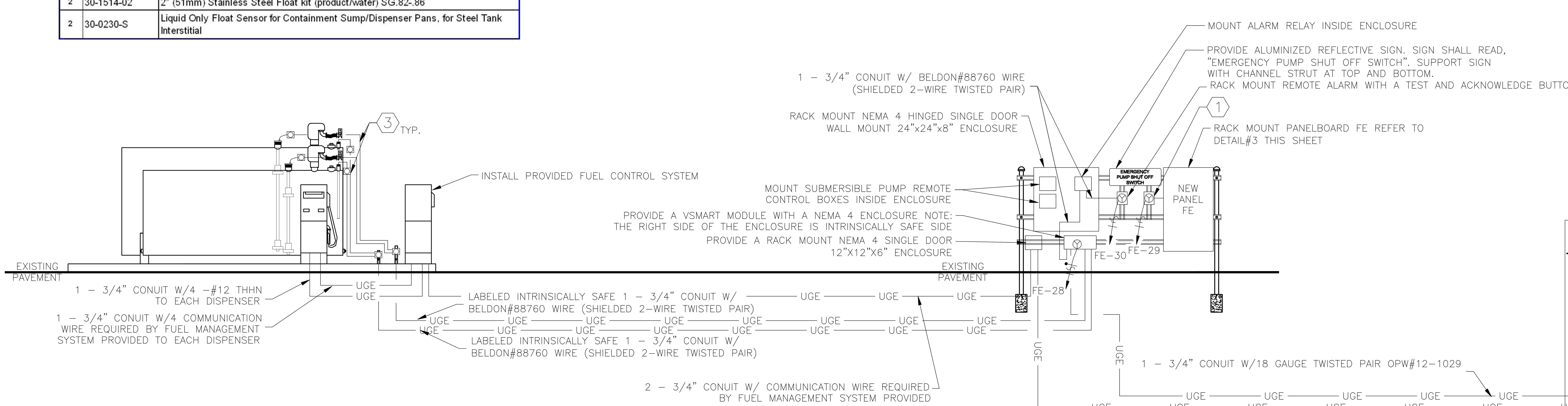

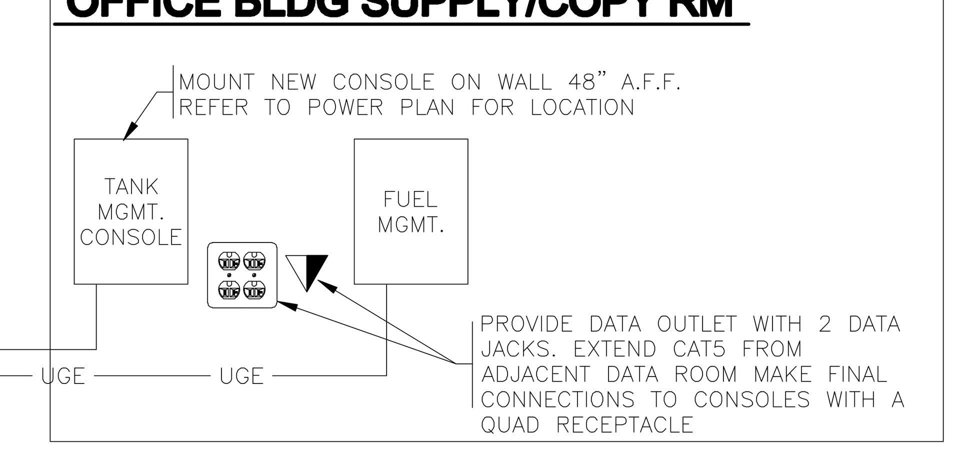

2 WIRING DIAGRAM FOR TANK MONITORING SYSTEM WITH IN-TANK AND SECONDARY CONTAINMENT LEAK DETECTION
SCALE: NOT TO SCALE

FUEL STATION NOTES

1. ALL BRANCH CIRCUIT WIRING FROM PANEL 'FE' TO THE FUEL STATION SHALL BE TYPE THHN GASOLINE & OIL RESISTANT SOLID WIRE A MINIMUM OF #12 WIRE IN 3/4"C. ALL ABOVEGROUND CONDUIT SHALL BE RIGID GALVANIZED STEEL (R.G.S.). ALL ABOVEGROUND CONDUIT BODIES AND PULL BOXES SHALL BE EXPLOSION PROOF. ALL BELOW GRADE CONDUIT SHALL BE RIGID NONMETALIC CONDUIT ENCASED IN RED CONCRETE 3" THICK MINIMUM. ALL LONG RADIUS 90° ELBOWS EMERGING FROM THE EARTH OR CONCRETE SHALL BE RIGID GALVANIZED STEEL AND DOUBLE WRAPPED WITH 3M CORROSION RESISTANT TAPE. CONTRACTOR SHALL INSTALL EXPLOSION-PROOF SEALS IN ALL CONDUITS EMERGING ABOVE GRADE COMMUNICATING WITH THE FUEL ISLAND AT BOTH ENDS UNLESS THE CONDUIT IS EMPTY OR THE CONDUIT IS THE INTRINSICALLY SAFE CONDUIT. THE FIRST FITTING ABOVE GRADE SHALL BE AN N.E.C. APPROVED EXPLOSION-PROOF SEAL.
2. THE ELECTRICAL INSTALLATION FOR THE FUEL ISLAND, INCLUDING POWER AND COMMUNICATIONS, SHALL COMPLY WITH THE NATIONAL ELECTRICAL CODE, ARTICLES 500, 501, 502, 504, AND 514 AND ALL RELATED ARTICLES THEREOF.
3. ALL CONDUITS SHALL BE INSTALLED UNDERGROUND PRIOR TO FUEL ISLAND'S CONCRETE FOUNDATION INSTALLATION.
4. PROVIDE AND INSTALL A INTEGRATED TANK MONITORING SYSTEM WITH SMART IN-TANK LEVEL PROBES AND SMART SECONDARY CONTAINMENT LEAK DETECTION PER SCHEDULE WITH AN EXTERNAL ALARM AND TEST/AKNOWLEDGE BUTTON. IF A DIFFERENT SYSTEM IS PROVIDED, IT SHALL BE THE CONTRACTOR'S RESPONSIBILITY TO PROVIDE THE CORRECT TYPE AND QUANTITY OF COMMUNICATION CABLING AND CONDUITS FOR THAT SYSTEM.
5. CONTRACTOR SHALL FOLLOW THE MANUFACTURER'S RECOMMENDATIONS FOR INSTALLATION REQUIREMENTS. IT IS THE CONTRACTORS RESPONSIBILITY TO INSTALL AND PROVIDE A FULLY FUNCTIONAL SYSTEM INCLUDING ALL THE NECESSARY FITTINGS AND HARDWARE SENSORS, PROBES, RISERS, RISER CAPS AND ATTACHMENTS FOR A COMPLETE FUNCTIONING SYSTEM. ALL CAPS AND RISERS SHALL BE THE QUICK RELEASE TYPE.
6. NO SPLICES SHALL BE MADE IN THE WIRE RUN BETWEEN A SENSOR OR PROBE JUNCTION BOX AND THE VSMART MODULE.
7. WHEN MORE THAN ONE EPO SWITCH IS REQUIRED EACH EPO SWITCH SHALL DISCONNECT SIMULTANEOUSLY FROM THE SOURCE OF SUPPLY, ALL CONDUCTORS OF THE CIRCUIT, INCLUDING THE GROUNDED CONDUCTOR PER N.E.C., ARTICLE 514-11(A) "CIRCUIT DISCONNECTS".
8. EACH EMERGENCY POWER-OFF SWITCH (EPO) SHALL BE A MOMENTARY PUSH BUTTON CLEARLY IDENTIFIED AND EASILY ACCESSIBLE AND BE INSTALLED IN A REMOTE LOCATION MORE THAN 20 FEET BUT LESS THAN 100 FEET FROM THE DISPENSER UNITS AND ALSO IN LINE OF SIGHT OF THE DISPENSER UNITS. THE EMERGENCY STOP BUTTON SHALL BE A MANUFACTURERED EMERGENCY STOP CONTROL STATION COMPLETE KIT WITH A CLEAR COVER AND EMERGENCY STOP SIGNAGE WITHIN ENCLOSURE BY POWER INTERGITY #IA-ESOC.
9. PROVIDE TWO HOURS OF TRAINING TO TXDOT SELECTED PERSONNEL FOR ALL EQUIPMENT.
10. FUEL STATION CONTRACTOR SHALL SUBMIT TO THE OWNER A COPY OF WARRANTY LETTER OR CERITIFICATION LETTER SENT TO THE TANK MONITORING SYSTEM MANUFACTURER STATING THE SYSTEM IS FUNCTIONING AND INSTALLED PROPERLY TO OBTAIN WARRANTY.
11. INTRINSICALLY SAFE INPUT WIRING SHALL BE INSTALLED PER N.E.C. ARTICLE 504. NON-TRINSICALLY SAFE WIRING ON THIS PROJECT SHALL NOT SHARE OTHER WIRES OF ANY TYPE IN RACEWAYS, CONDUIT BODIES, JUNCTION BOXES OR GUTTERS WITH INTRINISICALLY SAFE WIRING.

KEYED NOTE "⬡"

1. RACK MOUNT EPO - EMERGENCY POWER OFF SWITCH TO ACTIVATE ALL SHUNT TRIP BREAKERS IN PANEL "FE" ON PEDESTAL PER NEC 48" A.F.G. EPO SWITCH SHALL BE LOCATED WITHIN 20 TO 100FT FROM THE UNLEADED/DIESEL/FUTURE DISPENSER AND LPG DISPENSORS. COORDINATE LOCATION WITH OTHER DISPLINES. AND SITE CONDITIONS. REFERENCE ELECTRICAL SITE PLAN FOR ACTUAL LOCATION. REFERENCE DETAIL#3 / E2.21.
2. PROVIDE 2 -1" SPARE RACEWAYS STUB EACH CONDUIT INTO A SEPARATE EXPLOSION PROOF BOX NEAR FUEL DISPENSER. PROVIDE A PULL STRING. EXTEND SPARE RACEWAYS UNDERGROUND TO PANEL 'FE' STUB UP ADJACENT TO PANEL 'FE' AND CAP WITH 5 THREADS MINIMUM. LABEL AS SPARE FOR FUTURE USE.
3. ABOVEGROUND 3/4" CONDUITS WITH BELDEN WIRE PER TANK MANAGEMENT SYSTEM MANUFACTURER RECOMMENDATIONS. EXTEND FROM TANK WELLS FOR IN-TANK LEVEL PROBES AND INTERSTITIAL TANK MONITORING SENSORS TO LABELED INTRINSICALLY SAFE EXPLOSION PROOF JUNCTION BOXES. ANCHOR AND SUPPORT CONDUITS AND BOXES WITH CHANNEL STRUT. INTRINSICALLY SAFE CONDUIT SHALL BE LABELED PER NEC 504.80.

FUEL STATION PLAN - POWER & SPECIAL SYSTEMS AND SCHEDULES

NOTE: THIS DRAWING WAS CREATED FOR PRODUCTION ON 22" x 34" SHEET SIZE. DO NOT SCALE PRINTS.

Texas Department of Transportation
125 E. 11th Street
Austin, Texas 78701-2483
(512) 416-3048
Copyright © 2005 Texas Department of Transportation

THIS DOCUMENT IS RELEASED FOR THE PURPOSE OF INFORMATION ONLY
NOT FOR REGULATORY APPROVAL, PERMITTING, OR CONSTRUCTION.

EDCOUCH MAINTENANCE FACILITY
HIDALGO COUNTY, EDCOUCH TEXAS
PHARR DISTRICT

Revisions
Drawn by: CON
Project No.
Date 05-26-2009
Sheet No.
E2.21
of 12 E sheets

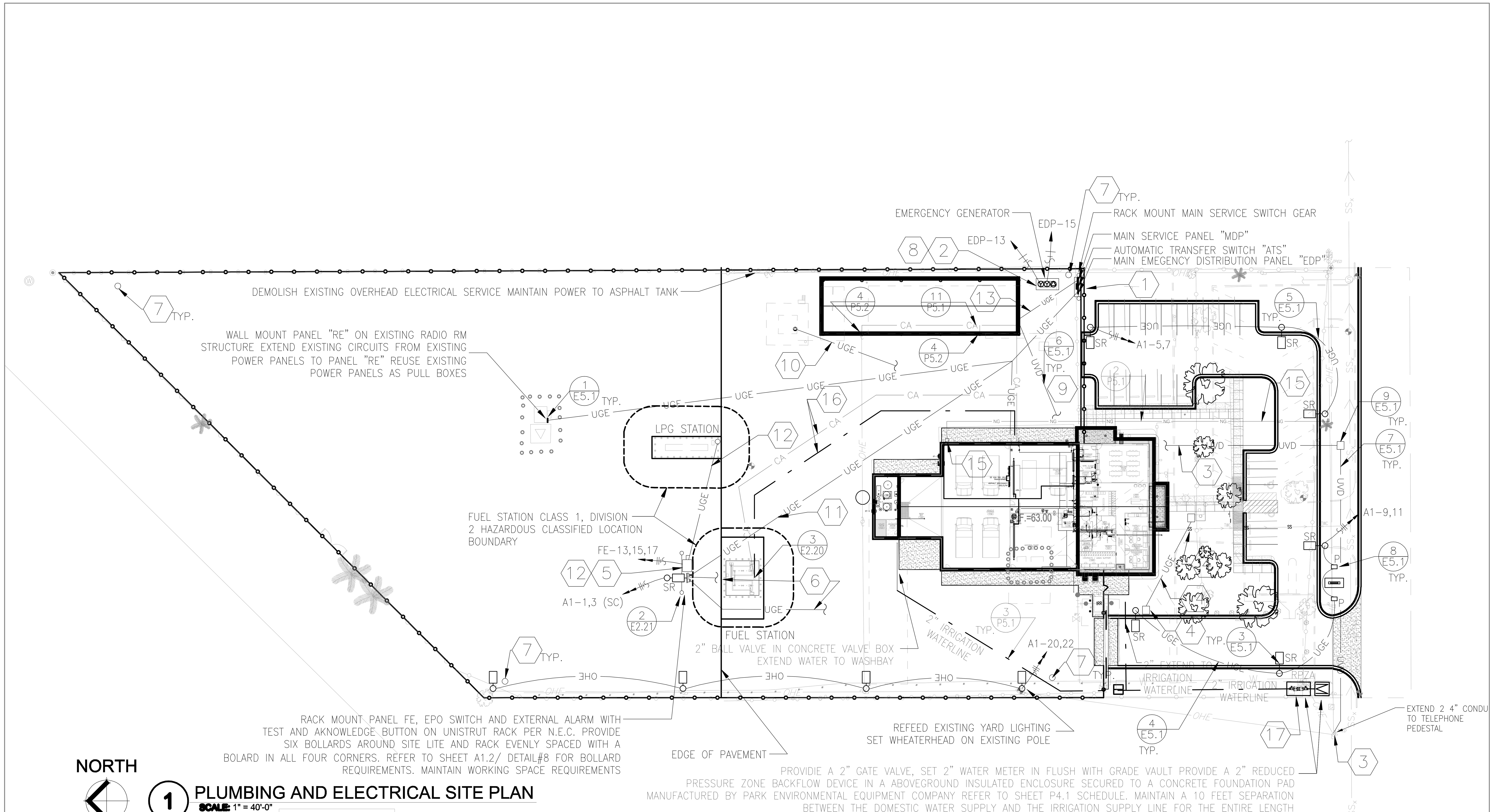

1 PLUMBING AND ELECTRICAL SITE PLAN
SCALE: 1" = 40'-0"

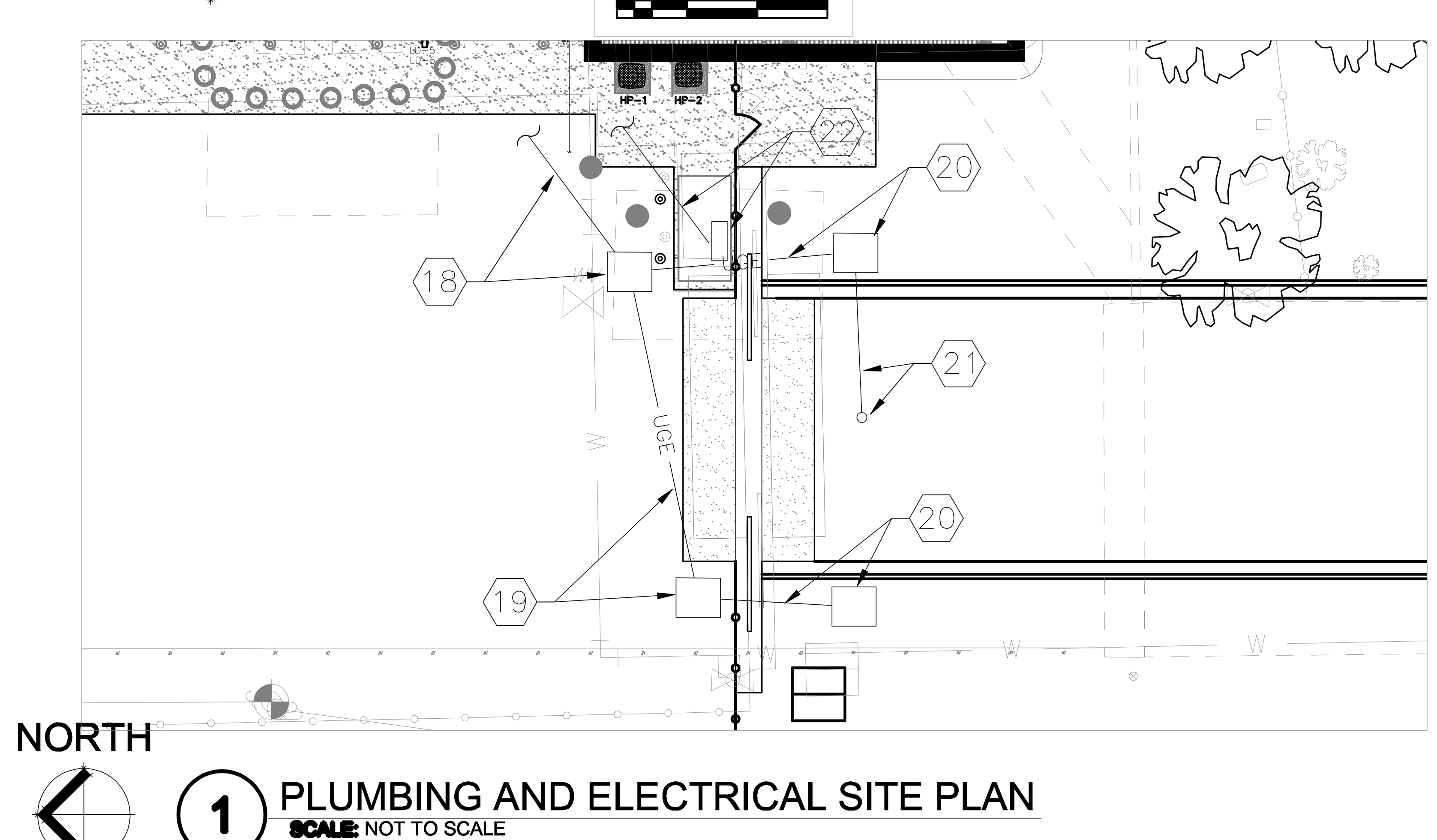

1 PLUMBING AND ELECTRICAL SITE PLAN
SCALE: NOT TO SCALE

LPG GENERAL NOTES

1. ALL BRANCH CIRCUIT WIRING FROM PANEL 'FE' TO THE LPG FUEL STATION SHALL BE TYPE THHN LPG RESISTANT SOLID WIRE A MINIMUM OF #12 WIRE IN 3/4"C., GASOLINE RESISTANT, AND INSTALLED IN RIGID GALVANIZED STEEL (R.G.S.). ALL BELOW GRADE CONDUIT SHALL BE RIGID NONMETALIC CONDUIT ENCASED IN RED CONCRETE 3" THICK . ALL LONG RADIUS 90° ELBOWS EMERGING FROM THE EARTH OR CONCRETE SHALL BE RIGID GALVANIZED STEEL AND DOUBLE WRAPPED. CONTRACTOR SHALL INSTALL EXPLOSION-PROOF SEALS IN RIGID GALVANIZED STEEL.

2. THE FIRST FITTING ABOVE THE SLAB SHALL BE AN N.E.C. APPROVED EXPLOSION-PROOF SEAL INSTALL AND PROVIDE SEALS IN ALL CONDUITS EMERGING AND LEAVING THE SLAB AT THE LPG FUEL ISLAND AND AT PANEL "FE", PER N.E.C. .

3. CONTRACTOR SHALL GROUND ABOVEGROUND LPG STORAGE TANKS PER N.E.C. SIMILAR TO E2.21/DETAIL#4.

4. WHERE EMERGENCY POWER-OFF SWITCH (EPO) IS REQUIRED TO CONTROL ADDITIONAL CIRCUIT BREAKERS, ALL SHUNT TRIP DEVICES SHALL BE CONNECTED IN PARALLEL UTILIZING THE SAME CONTROL CIRCUIT.

5. MOUNT EPO - EMERGENCY POWER OFF SWITCH TO ACTIVATE SHUNT TRIP CIRCUIT BREAKERS IN PANEL 'FE' ON PEDESTAL PER NEC 48" A.F.G. THE SWITCH SHALL BE LOCATED MORE THAN 20 BUT LESS THAN 100FT FROM LPG FUEL DISPENSOR. REFER TO E2.21/DETAIL#3 FOR FURTHER REQUIREMENTS.

6. EACH EPO SWITCH SHALL DISCONNECT SIMULTANEOUSLY FROM THE SOURCE OF SUPPLY, ALL CONDUCTORS OF THE CIRCUIT, INCLUDING THE GROUNDED CONDUCTOR PER N.E.C., ARTICLE 514-11(A) "CIRCUIT DISCONNECTS".

NOTE:

ROUTE ALL UNDERGROUND CONDUITS AND PIPES OUTSIDE OF DRIP EGDE OF TREES TO AVOID DAMAGE TO EXISTING TREES TO REMAIN

SEE E2.0 FOR GENERAL NOTES

SITE PLAN KEYED NOTES -

1. OVERHEAD SERVICE PROVIDED BY AEP. CONTRACTOR SHALL PROVIDE CT ENCLOSURE, POLE, RACK, WIRE AND WHEATERHEAD PER N.E.C-2008 AND AEP REQUIREMENTS. ADJUST LOCATION AND DIMENSIONS PER AEP. COORDINATE WITH AEP FOR POWER CONNECTIONS, THE CONTACT PERSON WITH AEP IS RUDY RUIZ AT 956-451-1704 OR JOE A MARTINEZ AT 956-361-2097. AEP WILL PROVIDE THE TRANSFORMERS AND MAKE FINAL CONNECTION TO THE WHEATHER HEAD. PROVIDE A CONCRETE PAD AROUND RACK EXTEND 3 FEET PAST RACK IN EVERY DIRECTION. MAKE PROVISIONS TO PAY ALL ASSOCIATED CONNECTION FEES TO UTILITY PROVIDER INCLUDING BUT NOT LIMITED TO TEMPORARY POWER, IMPACT FEES AND ANY AND ALL COST ASSOCIATED WITH NEW SERVICE. CONTRACTOR SHALL PAY AEP TO REMOVE ALL UNUSED OVERHEAD POWER ON SITE. EXTEND UNDERGROUND POWER TO SERVICE POLE LOCATED PER AEP.

2. PROVIDE EMERGENCY GENERATOR PAD AT LEAST 6 INCHES LARGER THAN ACTUAL GENERATOR. MAINTAIN ELECTRICAL WORKING CLEARANCE REQUIREMENTS AND GENERATOR MANUFACTURER CLEARANCE REQUIREMENTS. ORIENTATION OF GENERATOR SET SHALL BE SUCH THAT AIRFLOW IS NOT RESTRICTED. REFER TO STRUCTURAL FOR FURTHER REQUIREMENTS.

3. CONTRACTOR SHALL COORDINATE WITH AT&T; THE CONTACT PERSON IS DIANE DEANDRA 512-421-5004, OR LIND CAFLER AT 512-421-5197. AT&T WILL PROVIDE THE PEDESTAL AND 100 PAIR VOICE DATA CABLE TO THE TELECOMMUNICATION ROOM AND PROVIDE DEMARCATION IN THE TELECOMMUNICATION ROOM. CONTRACTOR SHALL PROVIDE 2-4" SCHEDULE 80 PVC CONDUITS WITH PULL WIRES, STUB UP IN TELECOMMUNICATION ROOM. VERIFY ACTUAL AND FINAL LOCATION OF TELEPHONE PEDESTAL WITH AT&T. REFER TO SHEET E2.2 FOR CONTINUATION. CONTRACTOR SHALL PAY AT&T ALL COST ASSOCIATED WITH NEW TELEPHONE SERVICE.

4. PROVIDE AND INSTALL PULLBOX FLUSH-WITH-GRADE PULLBOX SIZED PER N.E.C.

5. PROVIDE 30/2/NF/3R DISCONNECT AND MOUNTING RACK FOR FUTURE CONNECTION TO PROPANE TANK AND EPO SWITCH FOR LPG TANK. PROVIDE 1 -1" C. EMPTY CONDUIT W/ PULL STRING FROM DISCONNECT TO LPG SLAB STUB UP MARK AND CAP.

6. MULTIPLE CONDUITS ROUTED FROM PANEL FE TO FUEL STATION AND FROM PANEL FE RACK TO BUILDING. REFER TO SHEET E2.21 FOR NUMBER & SIZES OF CONDUITS AND WIRING.

7. EXTEND 4-1"C FROM WIRE CLOSET RM#114 TO EACH SECURITY BEAM. PROVIDE NEW BRANCH CIRCUITS FROM PANEL "AE" AS REQUIRED TO REFEED POWER AND RELOCATE SECURITY BEAM HARDWARE AND POLES PER OWNER COORDINATE AND VERIFY FINAL LOCATION AND ORIENTATION OF EACH SECURITY BEAM TO REESTABLISH SECURITY BEAM PERIMETER. CONTRACTOR SHALL PAY SECURITY CONTRACTOR TO DETERMINE FINAL LOCATION OF EACH SECURITY BEAM AND TO MAKE FINAL CONNECTIONS AND ADJUSTMENTS.

8. 1 - 2 1/2" C. AND 2-1" C. FOR MAIN POWER, BATTERY CHARGER POWER, CRANKCASE HEATER POWER, CONTROL AND ANNUNCIATOR WIRING TO GENERATOR. WALL MOUNT ANNUNCIATOR IN VECHICLE STORAGE ROOM NEAR PANELBOARDS.

9. 1 - 2" C. FOR FUTURE UNDERGROUND VOICE DATA STUB UP IN WIRE CLOSET.

10. 1- 2" C. FROM PANEL A1 TO EXISTING ASPHALT TANK.

11. 1- 1 1/2" C. FEEDER FROM PANEL EDP TO FE.

12. 2- 1" C. BRANCH CIRCUIT FROM PANEL FE TO LPG DISCONNECT AND EPO SWITCH.

13. 2- 2" C. FOR FEEDER FROM PANEL MDP TO PANEL B1.

14. 1- 1" C. FOR FUTURE USE.

15. CONTRACTOR SHALL COORDINATE WITH TEXAS GAS SERVICE; THE CONTACT PERSON IS OSVALDO DE LUNA 956-630-2234, 956-357-2534. TEXAS GAS SERVICE SHALL PROVIDE A NEW YARD EXTENSION AND SET A NEW GAS METER AT NEW OFFICE BUILDING. TOTAL NATURAL GAS LOAD TO SITE IS 250,000 BTUH. CONTRACTOR SHALL PAY TEXAS GAS SERVICE ALL ASSOCIATED COST TO PROVIDE NEW SERVICE AND TO SET METER.

16. EXTEND 3/4" SOFT DRAWN TYPE "K" WATER AND AIR LINE TO FUEL ISLAND AIR WATER PEDESTAL.

17. CONTRACTOR SHALL COORDINATE WITH THE CITY OF EDCOUCH THE CONTACT PERSON IS JUAN OLIVAREZ 956-272-5983 OR 956-262-5312. SET A NEW 2" IRRIGATION METER. CONTRACTOR SHALL PAY THE CITY OF EDCOUCH ALL ASSOCIATED COST TO PROVIDE NEW IRRIGATION METER.

18. 1-2"C W/ PULL STRINGS FROM WIRE CLOSET RM#114 EXTEND TO FLUSH-WITH-GRADE PULLBOX FOR GATE CONTROLS. COORDINATE EXACT LOCATIONS WITH SECURITY GATE CONTRACTOR AND OWNER. REFER TO SHEET A1.3/DETAIL#1 FOR LOCATIONS.

19. 1-2"C W/ PULL STRINGS FROM FLUSH-WITH-GRADE PULLBOX TO FLUSH-WITH-GRADE PULLBOX FOR GATE CONTROLS. COORDINATE EXACT LOCATIONS WITH SECURITY GATE CONTRACTOR AND OWNER. REFER TO SHEET A1.3/DETAIL#1 FOR LOCATIONS. PULL WIRE REQUIRED FOR GATE OPERATOR CONTROLS.

20. 1-1"C W/ PULL STRINGS FROM FLUSH-WITH-GRADE PULLBOX TO FLUSH-WITH-GRADE PULLBOX FOR GATE CONTROLS. COORDINATE EXACT LOCATIONS WITH SECURITY GATE CONTRACTOR AND OWNER. REFER TO SHEET A1.3/DETAIL#1 FOR LOCATIONS. PULL WIRE REQUIRED FOR GATE OPERATOR CONTROLS.

21. 1-1"C W/ PULL STRINGS FROM FLUSH-WITH-GRADE PULLBOX TO POLE MOUNTED CARD READER FOR GATE CONTROLS. COORDINATE EXACT LOCATIONS WITH SECURITY GATE CONTRACTOR AND OWNER. REFER TO SHEET A1.3/DETAIL#1 FOR LOCATIONS. SLOT POLE ENTER ANNULAR SPACE OF POLE UNDERGROUND. PULL WIRE REQUIRED FOR GATE OPERATOR CONTROLS.

22. PROVIDE 2-BRANCH CIRCUITS W/ 1"C AND THHN WIRE FROM PANELBOARD AE FOR EACH GATE OPERATOR. PULL CIRCUITS THRU A NEMA 4 HINGED SINGLE DOOR 20X16X6 ENCLOSURE BACKED UP TO FENCE EXTEND EACH CIRCUIT AND MAKE FINAL CONNECTION TO EACH GATE OPERATOR. COORDINATE EXACT LOCATIONS WITH SECURITY GATE CONTRACTOR AND OWNER. REFER TO SHEET A1.3/DETAIL#1.

PLUMBING AND ELECTRICAL SITE PLAN

NOTE: THIS DRAWING WAS CREATED FOR PRODUCTION ON 22" x 34" SHEET SIZE. DO NOT SCALE PRINTS.

Texas Department of Transportation
125 E. 11th Street
Austin, Texas 78701-2483
(512) 416-3848
Copyright © 2005 Texas Department of Transportation

THIS DOCUMENT IS RELEASED FOR THE PURPOSE OF INFORMATION ONLY NOT FOR REGULATORY APPROVAL, PERMITTING, OR CONSTRUCTION.

EDCOUCH MAINTENANCE FACILITY
HIDALGO COUNTY, EDCOUCH TEXAS
PHARR DISTRICT

Revisions

Drawn by: CON

Project No.

Date 05-26-2009

Sheet No.

PE1.1

of 1PE sheets

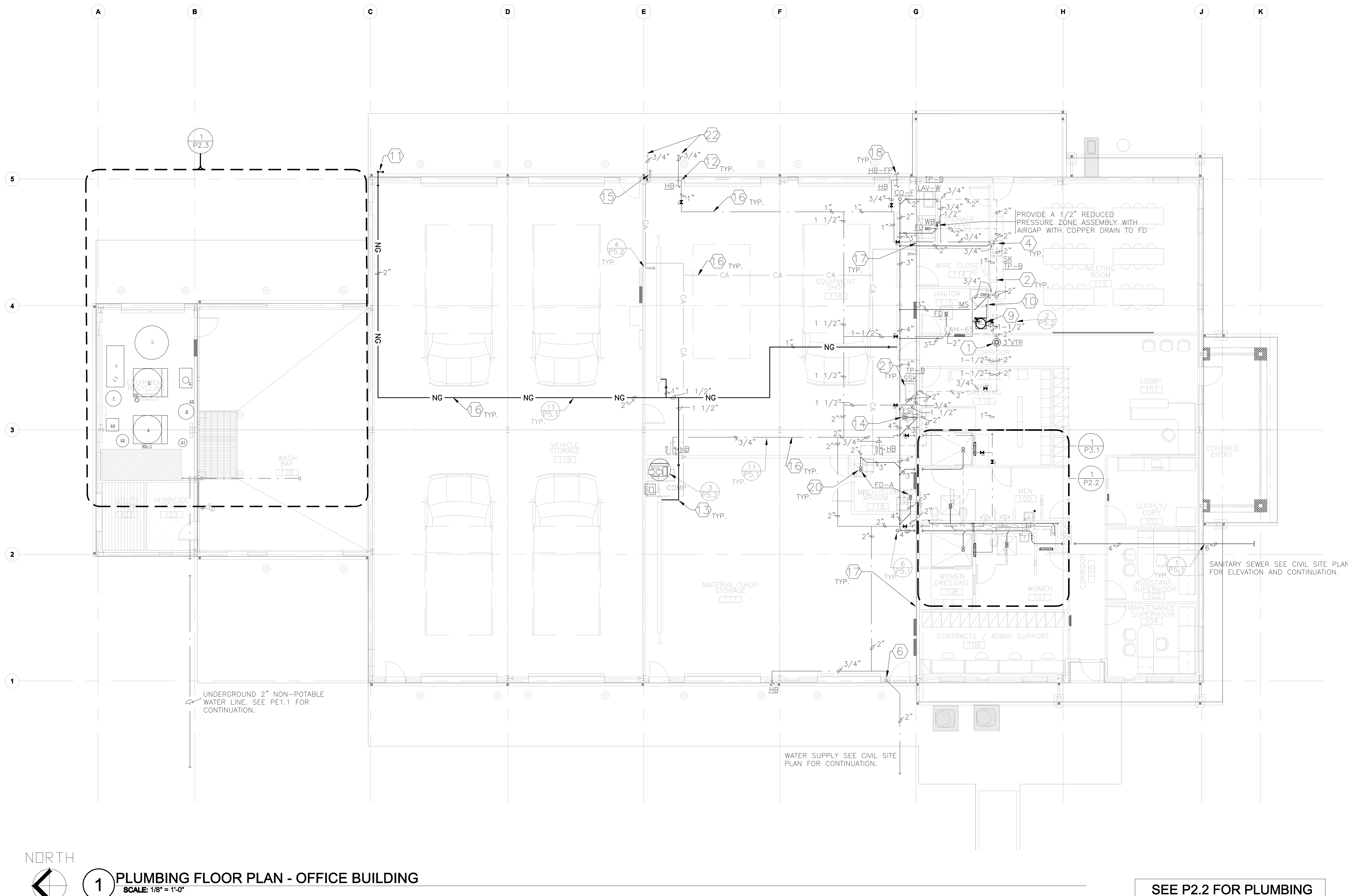

1 PLUMBING FLOOR PLAN - OFFICE BUILDING
SCALE: 1/8" = 1'-0"

SEE P2.2 FOR PLUMBING GENERAL & KEYED NOTES

SEE P3.1 FOR RISER DIAGRAMS

Texas Department of Transportation
125 E. 11th Street
Austin, Texas 78701-2483
(512) 416-2040
Copyright © 2005 Texas Department of Transportation

THIS DOCUMENT IS RELEASED FOR THE PURPOSE OF INFORMATION ONLY
NOT FOR REGULATORY APPROVAL, PERMITTING, OR CONSTRUCTION.

EDCOUCH MAINTENANCE FACILITY
HIDALGO COUNTY, EDCOUCH TEXAS
PHARR DISTRICT

Revisions

Drawn by: CON
Project No.
Date 05-26-2009
Sheet No.
P2.1
of 8 P sheets

PLUMBING PLAN - OFFICE BUILDING

NOTE: THIS DRAWING WAS CREATED FOR PRODUCTION ON 22" x 34" SHEET SIZE. DO NOT SCALE PRINTS.

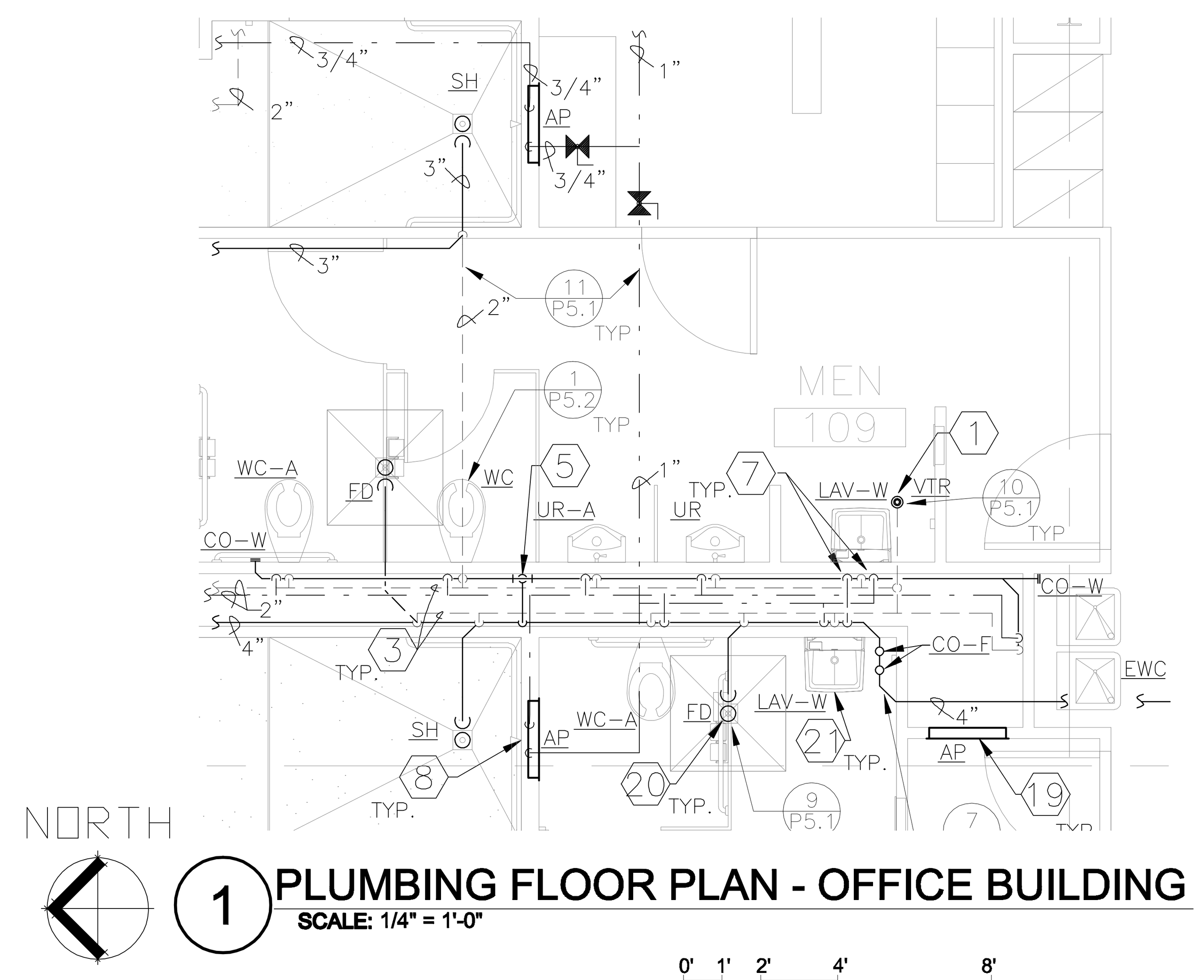

1 PLUMBING FLOOR PLAN - OFFICE BUILDING
SCALE: 1/4" = 1'-0"

0' 1' 2' 4' 8'

SYMBOL SCHEDULE

Symbol	Description
(solid line)	SANITARY WASTE PIPING
(dashed line)	SANITARY VENT PIPING
(line)	COLD WATER PIPING
(line)	HOT WATER SUPPLY
(line)	HOT WATER RETURN
RW	RECLAIMED WATER
HHR	HEATING HOT WATER RETURN
CHS	CHILLED WATER SUPPLY
CHR	CHILLED WATER RETURN
NG	NATURAL GAS PIPING
LPG	LIQUID PETROLEUM GAS
CND	CONDENSATE DRAIN LINES
REF	REFRIGERANT PIPING
CA	COMPRESSED AIR PIPING
OIL	LUBRICANT PIPING
GR	GREASE PIPING
(symbol)	HOSE BIBB
AA	WATER HAMMER ARRESTOR
(symbol)	TEMP & PRESSURE VALVE
(symbol)	BACKFLOW PREVENTER
(symbol)	CHECK VALVE
CHR	CONTROL VALVE
NG	PRESURE REDUCING VALVE
(symbol)	PIPE DROP
(symbol)	PIPE RISER
(symbol)	P-TRAP
(symbol)	VALVE IN VALVE BOX
CHR	GATE VALVE
(symbol)	BALL VALVE
VTR	VENT THRU ROOF
NG	TRENCH UNDER PAVEMENT INSTALL WITH SLEEVE

APPLIES TO ALL FUEL GAS PIPING
GENERAL NOTES

1. NOTE THAT CONSTRUCTION DRAWINGS ARE DIAGRAMMATIC BY THEIR NATURE, AND ARE NOT INTENDED TO SHOW EVERY CONNECTION IN DETAIL OR EVERY PIPE OR CONDUIT IN ITS EXACT LOCATION. FEATURES AND COMPONENTS NOT SHOWN ARE SUBJECT TO THE REQUIREMENTS OF STANDARDS REFERENCED ELSEWHERE IN THE CONSTRUCTION DOCUMENTS. THE CONTRACTOR SHALL COORDINATE THE VARIOUS TRADES IN ORDER TO AVOID INTERFERENCE BETWEEN THE VARIOUS SEGMENTS OF THE PROJECT. CONTRACTOR SHALL VERIFY ALL CRITICAL BUILDING DIMENSIONS FROM THE ARCHITECTURAL AND STRUCTURAL DRAWINGS.
2. ALL FUEL GAS PIPING SHALL BE INSTALLED PARALLEL OR PERPENDICULAR TO THE BUILDING LINES UNLESS NOTED OTHERWISE ALL CONNECTIONS SHALL BE MADE AT THE TOP OR SIDE OF FUEL GAS PIPING. CONNECTIONS TO THE BOTTOM SIDE OF GAS PIPING ARE NOT ACCEPTABLE.
3. ALL FUEL GAS PIPING UP TO 2" SHALL BE SCHEDULE 40 BLACK STEEL, THREADED WITH NPT PIPE THREADS. ALL JOINTS SHALL BE SEALED WITH TEFLON BASED PIPE DOPE MATERIAL AND TELFLON TAPE, INSOLUBLE IN THE PRESENCE OF GAS. ALL NATURAL GAS PIPING ABOVE 2" SHALL BE BLACK STEEL WITH WELDED FITTINGS. ALL WELDED JOINTS SHALL BE MADE BY A CERTIFIED PIPE WELDER AS DEFINED IN THE LATEST EDITION OF THE UNIFORM PLUMBING CODE.
4. SUPPORT ALL PIPING ON 6' CENTERS. USE UNISTRUT AND BRACES/TRAPEZES MADE OF UNISTRUT OR PER MANUFACTURER RECOMMENDATIONS.
5. PRESSURE TEST (DOWNSTREAM OF SERVICE REGULATOR) SHALL BE PERFORMED BY CONTRACTOR BEFORE INTRODUCING FUEL GAS TO THE SYSTEM AT WHICH TIME THE OWNER'S REPRESENTITIVE SHALL WITNESS THE TEST. CONTRACTOR SHALL ISOLATE ALL PRESSURE REGULATORS DURING LEAK TEST AND FIX ALL LEAKS. REFERENCE THE SPECIFICATIONS FOR ADDITIONAL REQUIREMENTS.
6. CONTRACTOR SHALL MEET THE MANUFACTURER'S RECOMMENDED INLET PRESSURE ON ALL RADIANT HEATERS TO ACHIEVE A FULLY FUNCTIONAL HEATING SYSTEM.
7. TAG ALL FUEL GAS PRESSURE REGULATORS SHOWING OPERATING PRESSURE IN INCHES OF WATER COLUMN AND LABELED NATURAL GAS.
8. CONTRACTOR SHALL INSTALL A UNION AND A FUEL GAS PLUG VALVE AT EVERY BUILDING ENTRY.
9. FUEL GAS PIPING INSTALLED BELOW GRADE SHALL BE EFFECTIVELY SUPPORTED AT ALL POINTS ON UNDISTURBED OR WELL COMPACTED SAND (SEE DETAILS).
10. ALL PROTECTIVELY COATED UNDERGROUND FUEL GAS PIPING SHALL BE INSPECTED BY OWNER'S REPRESENTATIVE FOR DAMAGE AND OR IMPERFECTIONS TO THE PIPE COATING. CONTRACTOR SHALL REPAIR NOTED AREAS AND HOLIDAYS PRIOR TO BACKFILLING TRENCH.
11. CONTRACTOR SHALL INSTALL A SLEEVE WHEN FUEL GAS PIPING PASSES UNDER PAVEMENT AND/OR CONCRETE. THE INSTALLED SLEEVE SHALL BE A MINIMUM OF TWO SIZES LARGER THAN THE SLEEVED GAS PIPING, THE SLEEVE SHALL BE SCHEDULE 80 PVC, OR C-900 PVC.
12. ALL UNDERGROUND FUEL GAS SUPPLY PIPING SHALL BE POLYMER COATED BLACK PIPE SCHEDULE 40. GAS PIPING INSTALLED UNDERGROUND IN EXTERIOR LOCATIONS SHALL BE PROTECTED FROM CORROSION BY APPROVED COATINGS MACHINE APPLIED AS SPECIFIED. FIELD WRAPPING SHALL BE INSTALLED AT JOINTS AND AREAS WHERE COATINGS HAVE BEEN DAMAGED OR INTERRUPTED.
13. ALL FUEL GAS PIPING SHALL BE PAINTED "SAFETY YELLOW".

KEYED NOTES - ⬡

1. EXTEND SANITARY VENT THROUGH ROOF LINE AT LEAST 12" MAINTAINING AT LEAST 10FT FROM ANY OPENING IN BUILDING.
2. MANIFOLD VENTS TOGETHER SLOPE AWAY FROM VENT THROUGH ROOF.
3. SANITARY VENT UP INSIDE CHASE, MANIFOLD VENTS TOGETHER SLOPE AWAY FROM VENT THROUGH ROOF.
4. SANITARY VENT UP INSIDE WALL, ROUTE ABOVE CEILING.
5. WASTE DOWN THROUGH SLAB, COORDINATE WITH STRUCTURAL TO CLEAR GRADE BEAMS.
6. BUILDING DOMESTIC WATER SUPPLY, ROUTE UNDER SLAB AND STUB UP IN EXTERIOR WALL TO ABOVE CEILING.
7. PIPE WATER DOWN INSIDE CHASE, ROUTED FROM ABOVE CEILING.
8. PIPE WATER DOWN INSIDE WALL, ROUTED FROM ABOVE CEILING.
9. PROVIDE AND INSTALL WATER HEATER DRAIN PAN WITH 1"ø TYPE "K" COPPER HARD DRAWN DRAIN FROM PAN TO MOP SINK ELBOW IN THE DOWN POSITION.
10. PROVIDE AND INSTALL WATER HEATER T&P VALVE WITH 1"ø TYPE "K" COPPER HARD DRAWN RELIEF DRAIN FROM VALVE TO MOP SINK ELBOW IN THE DOWN POSITION.
11. GAS LINE SHALL RUN UNDERGROUND UP TO THE METER AT THE BUILDING. CONTRACTOR SHALL INSTALL AND PROVIDE A TRANSITION GAS RISER, GAS PLUG COCK VALVE AND UNION. INSTALL VALVE 24" AFG AT THE TOP OF THE GAS RISER IN THE HORIZONTAL POSITION. RUN GAS LINE THROUGH EXTERIOR WALL AND INTO THE BUILDING. PROVIDE LEAK SEAL TO ENSURE A WEATHER TIGHT PENETRATION. PIPE UP AND ROUTE INSIDE BUILDING JUST BELOW BOTTOM OF THE ROOF PERLINS DROP DOWN TO EACH HEATER. PROVIDE FOUR BOLLARDS PER IN ALL FOUR CORNERS. REFER TO SHEET A1.2/ DETAIL#8 FOR BOLLARD REQUIREMENTS. MAINTAIN WORKING SPACE REQUIREMENTS.
12. PIPE DOWN EXPOSED. INSTALL ANCHORS TO SUPPORT PIPE AND HOSE BIBB TO WALL, INSTALL A 3/4" HOSE BIBB ON INSIDE WALL, 48" A.F.F.
13. PROVIDE A VERTICAL DROP AND DIRT LEG AT EACH HEATER. REFER TO HEATER DETAILS.
14. PROVIDE AND INSTALL AN ACCESSIBLE LOCKING BALL VALVE, LOCKED IN THE OPEN POSITION.
15. PROVIDE AND INSTALL AN ADDITIONAL QUICK DISCONNECT TO AIR DROP WITH AN ADDITIONAL QUICK DISCONNECT TO THE EXTERIOR OF THE BUILDING.
16. ALL PIPING IN OPEN BAYS, PIPE UP, ROUTE INSIDE BUILDING JUST BELOW BOTTOM OF ROOF DECKING.
17. FIRE CAULK ALL PENETRATIONS IN FIRE WALL. (SEE GENERAL NOTES).
18. FROST PROOF WALL HYDRANT SHALL FIT WITHIN WALL COORDINATE WITH ARCHITECTURAL DRAWINGS.
19. PROVIDE 24 x 24 ACCESS PANEL MARKED AS "AP". REFER TO ARCHITECTURAL SPECIFICATIONS.
20. PROVIDE A TRAP PRIMER TO ALL FLOOR DRAINS.
21. PROVIDE A THERMOSTATIC TEMPERING VALVE ON ALL FAUCETS. MANUFACTURED BY POWERS MODEL#LM495.
22. EXTEND 3/4" SOFT DRAWN TYPE "K" WATER AND AIR LINE TO FUEL ISLAND AIR WATER PEDESTAL.

APPLIES TO ALL P-SHEETS
GENERAL NOTES

1. NOTE THAT CONSTRUCTION DRAWINGS ARE DIAGRAMMATIC BY THEIR NATURE, AND ARE NOT INTENDED TO SHOW EVERY CONNECTION IN DETAIL OR EVERY PIPE OR CONDUIT IN ITS EXACT LOCATION. FEATURES AND COMPONENTS NOT SHOWN ARE SUBJECT TO THE REQUIREMENTS OF STANDARDS REFERENCED ELSEWHERE IN THE CONSTRUCTION DOCUMENTS. THE CONTRACTOR SHALL COORDINATE THE VARIOUS TRADES IN ORDER TO AVOID INTERFERENCE BETWEEN THE VARIOUS SEGMENTS OF THE PROJECT. CONTRACTOR SHALL VERIFY ALL CRITICAL BUILDING DIMENSIONS FROM THE ARCHITECTURAL AND STRUCTURAL DRAWINGS.
2. ALL WORK SHALL BE INSTALLED PARALLEL OR PERPENDICULAR TO THE BUILDING LINES UNLESS NOTED OTHERWISE.
3. ALL COLD AND HOT WATER PIPING ABOVE SLAB SHALL BE HARD DRAWN TYPE "K" COPPER.
4. ALL COLD AND HOT WATER PIPING UNDER SLAB SHALL BE SOFT DRAWN TYPE "K" COPPER. MINIMIZE JOINT CONNECTIONS UNDER SLAB.
5. ALL NON-POTABLE IN WASHBAY WATER PIPING SHALL BE PURPLE PVC SCHEDULE 40 PIPE OR BETTER WITH THE EXCEPTION OF THE TRUCK FILL WHICH SHALL BE CONSTRUCTED PER DETAIL, ROUTE UNDER SLAB AND STUB UP INSIDE CHASE WITH PURPLE PVC SCHEDULE 40 SLEEVE. PROVIDE AN ACCESSIBLE ISOLATION BALL VALVE. PURPLE PIPE SHALL BE PURPLE CONTINOUS IN COLOR AND LABEL RECLAIMED WATER SUPPLY PIPING AS NON-POTABLE RECLAIMED WATER DO NOT DRINK EVERY 2 FEET AND AT EVERY BRANCH CONNECTION. PIPING SHALL BE INSULATED AS DESCRIBED FOR DOMESTIC WATER PIPING PAINT INSULATION PURPLE AND PROVIDE NON-POTABLE LABELS EVERY 2 FEET ON PIPING AND INSULATION. SUPPORT PIPING WITH CLEVIS HANGERS AND FROM BLOCK WALL WITH CHANNEL STRUT EVERY 4 FEET. ALL OTHER WATER PIPING INSIDE BUILDING SHALL BE COPPER AS DESCRIBED ABOVE.
6. ALL DOMESTIC WATERLINES ON SITE FROM THE METER TO THE BUILDINGS UP TO 5 FEET OUTSIDE THE SLAB SHALL BE PVC SCHEDULE 80. TRANSITION TO COPPER AT ALL BUILDING STRUCTURES.
7. COPPER SWEAT CONNECTIONS SHALL BE USED IN THE ASSEMBLY OF COPPER PIPING. USE ONLY SILVER OR ANTIMONY SOLDER, LEAD IS PROHIBITED.
8. USE DIELECTRIC UNIONS AT ALL CONNECTIONS BETWEEN COPPER AND GALVANIZED, IRON, OR STEEL PIPING.
9. USE DIELECTRIC UNIONS ON WATER HEATER CONNECTIONS. BOND HOT WATER AND COLD WATER PIPING WITH No. 8 AMERICAN WIRE GAUGE COPPER WIRE AND COPPER PIPE CLAMPS TO MAINTAIN GROUNDING ON HOT WATER PIPING. INSTALL AND PROVIDE FLEXIBLE CORRUGATED COPPER CONNECTORS PLACE LOOP IN CONNECTOR MAXIMUM TOTAL LENGTH 24".
10. ALL WATER PIPING SHALL SLOPE A MINIMUM OF 1/8" PER FOOT (1%) TO DRAIN TO ALL FIXTURES, HOSE BIBBS AND HOT WATER HEATERS TO ALLOW FOR WINTERIZATION.
11. ALL WASTE PIPING UNDER SLAB AND UP TO 5 FEET OUTSIDE THE BUILDING SHALL BE SERVICE WEIGHT CAST IRON BELL AND SPIGOT LABELED ASTM-74.
12. ALL WASTE AND VENT PIPING ABOVESLAB SHALL BE NO-HUB CAST IRON LABELED ASTM-888.
13. ALL HORIZONTAL WASTE AND VENT PIPING SHALL SLOPE 1/4" PER FOOT (2%), TOWARD THE DIRECTION OF WASTE FLOW.
14. PROVIDE SLEEVES FOR ALL GRADE BEAM PENETRATIONS. REFER TO STRUCTURAL DRAWINGS FOR GRADE BEAM PENETRATION REQUIREMENTS.
15. ALL FLOOR DRAINS SHALL BE FITTED WITH A VACUUM BREAKER TRAP PRIMER FROM THE WATERCLOSET, WATERSAVER TRAP PRIMER ON TAIL-PIECE OFF SINK OR BY A ELECTRONIC TRAP PRIMER ON A TIME DELAY. RUN 1/2" COPPER TUBING FROM FLOOR DRAIN TO THE NEAREST AVAILABLE TRAP PRIMER DISTRIBUTION UNIT. PROVIDE TRAP PRIMERS FOR ALL FLOOR DRAINS.
16. ALL EXPOSED PIPING UNDER LAVATORIES SHALL BE INSULATED WITH SPECIFIED INSULATION.
17. INSULATION FOR COLD WATER PIPING STARTS AT THE BOTTOM OF THE SLAB PENETRATION. INSULATE ALL HOT WATER PIPING. (SEE SPECIFICATIONS).
18. ROOF CONTRACTOR SHALL INSTALL ALL ROOF PENETRATIONS IN THE APPROXIMATE LOCATIONS SHOWN IN PLANS. NOTE ALL ROOF PENETRATIONS ON THE OFFICE BUILDING SHALL BE LOCATED ON THE BACKSIDE OF RIDGE CAP. ALL ROOF PENETRATIONS SHALL BE INSTALLED PER ARCHITECTURAL DRAWINGS AND SPECIFICATIONS.
19. SUPPORT ALL ABOVE GRADE PIPING ON 6 FOOT CENTERS. USE UNISTRUT AND BRACES/TRAPEZES MADE OF UNISTRUT OR PER MANUFACTURER RECOMMENDATIONS.
20. CONTRACTOR IS RESPONSIBLE FOR COORDINATING, FILLING AND PAYING FOR ALL ASSOCIATED FEES AND PERMITS AS PART OF THIS BID PACKAGE.
21. SLEEVE ALL SLAB PENETRATIONS WITH SCHEDULE 40 PVC. SLEEVE SHALL BE 2 PIPE SIZES LARGER THAN PENETRATING PIPE. MAINTAIN INSULATION THROUGH SLEEVES.
22. SLEEVE ALL WALL PENETRATIONS WITH SLEEVE 2 PIPE SIZES LARGER THAN PENETRATING PIPE. SLEEVE AND PENETRATING PIPE SHALL BE CONSTRUCTED FROM THE SAME MATERIAL. MAINTAIN INSULATION THROUGH SLEEVES.
23. ALL EXTERIOR, SLAB AND CONDITIONED TO NON-CONDITIONED PENETRATIONS, PACK ANNULAR SPACE WITH MINERAL WOOL. SEAL EACH EXTERIOR END AND TOP END OF SLAB PENETRATION WITH SEALANT (SEE ARCHITECTURAL SPECIFICATIONS).
24. FIRE CHAULK ALL PENETRATIONS WHERE ARCHITECTURAL PLANS CALL FOR FIRE RATED CONSTRUCTION WALLS. STOP INSULATION SHORT OF SLEEVE FILL ANNULAR SPACES WITH FIRE RATED CHAULK.
25. ALL SANITARY DRAINAGE, VENT PIPING, FUEL PIPING, HOT AND COLD WATER SHALL BE PRESSURE TESTED BY THE CONTRACTOR AT WHICH TIME THE OWNER'S REPRESENTATIVE SHALL WITNESS THE PRESSURE TEST. REFERENCE THE SPECIFICATIONS FOR FURTHER REQUIREMENTS.

SEE P3.1 FOR RISER DIAGRAMS

Texas Department of Transportation
125 E. 11th Street
Austin, Texas 78701-2483
(512) 416-3048

Copyright © 2005 Texas Department of Transportation

THIS DOCUMENT IS RELEASED FOR THE PURPOSE OF INFORMATION ONLY
NOT FOR REGULATORY APPROVAL, PERMITTING, OR CONSTRUCTION.

EDCOUCH MAINTENANCE FACILITY
HIDALGO COUNTY, EDCOUCH TEXAS
PHARR DISTRICT

Revisions

Drawn by: CON
Project No.
Date 05-26-2009
Sheet No.
P2.2
of 8 P sheets

PLUMBING PLAN - OFFICE BUILDING, NOTES & SCHEDULES

NOTE: THIS DRAWING WAS CREATED FOR PRODUCTION ON 22" x 34" SHEET SIZE. DO NOT SCALE PRINTS.

CADFILE: T:\MNTFMD02FTWCBC4704-00-837\02-77-470400837\Acad\prototypical pdfs\edcouch\Acad\MEP\PLMB\P2_1_and_P2_2.dwg Plotted: Fri. Aug. 07, 2009 @ 11:37 AM By: MBAZAN

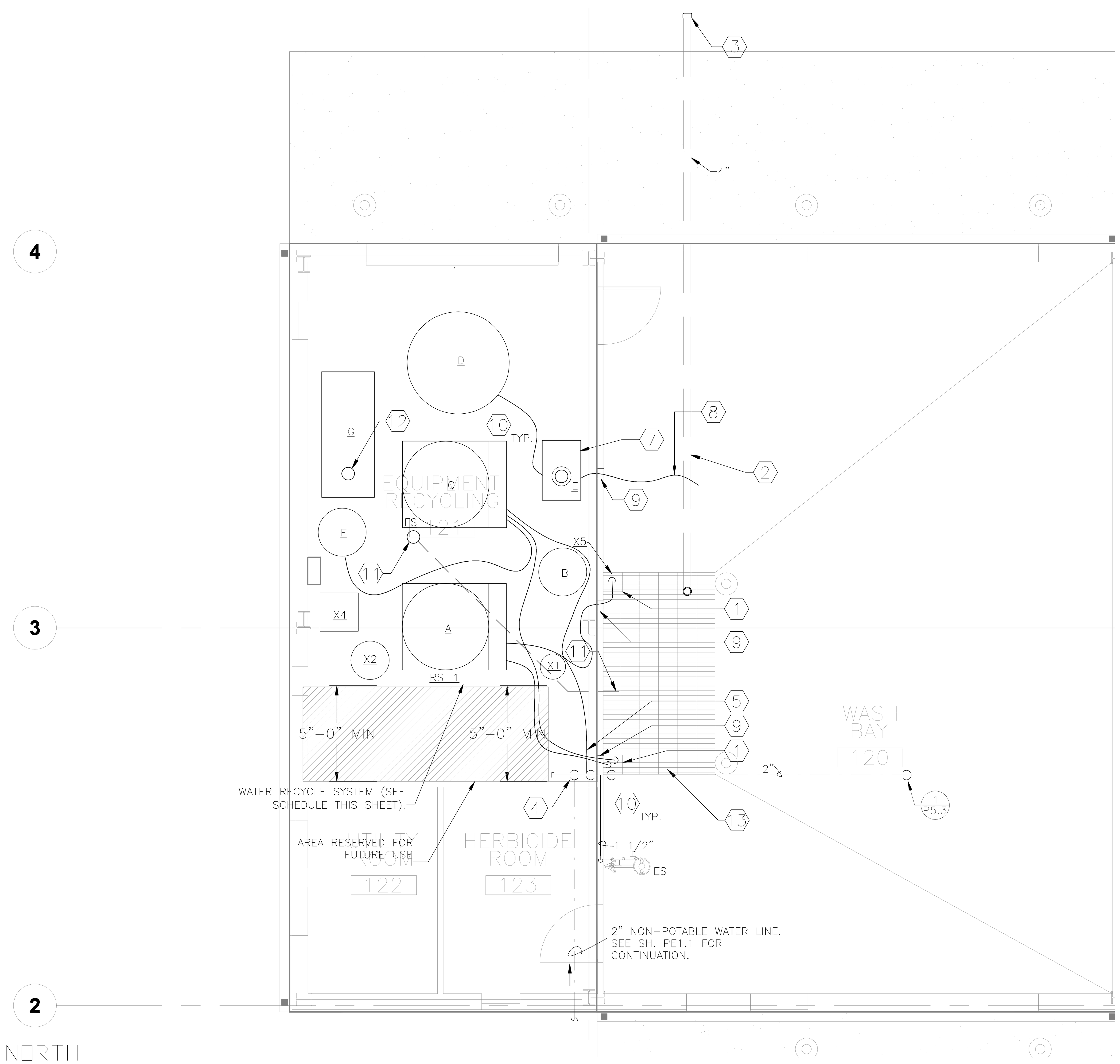

1 TRUCK WASH BAY
SCALE: 1/4" = 1'-0"

0' 1' 2' 4' 8'

WATER PURIFICATION AND RECYCLING SYSTEM

SEPARATOR SYSTEM COMPONENTS:	RS-1
A	MODEL CL-30D, SOLIDS SEPARATOR ELECTRICAL: 120V/1ϕ/60, 9 FLA, 20/1 C.B.
B	165 GALLON POLYETHYLENE STORAGE TANK
C	MODEL CLB-603A, RECYCLING UNIT ELECTRICAL: 230V/1ϕ/60, 20 FLA, 30/2 C.B.
D	1000 GALLON POLYETHYLENE STORAGE TANK
E	PRESSURE WASHER 5HP, DIESEL 280,000 BTU/HR ELECTRICAL: 208V/1ϕ/60, 31 FLA, 50 AMP GFCI PLUG
F	165 GALLON POLYETHYLENE STORAGE TANK
G	MODEL HBO-15D, WATER INCINERATOR DIESEL 200,000 BTU/HR 120V/1ϕ/60 8 AMPS/ 20/1 C.B/ 6" EXHAUST
X1	OIL RECLAIM BUCKET
X2	PRESSURE TANK
X4	5HP AIR COMPRESSOR, 120 GALLON VERTICAL RECIEVER TANK, ELECTRICAL: 208/3ϕ/60
X5	SUMP PUMP
MINIMUM SYSTEM CAPACITY (GPM)	5.0
TYPE OF WATER PURIFICATION	BIOREMEDIATION
MANUFACTURER	WATER MAZE WATER TREATMENT SYSTEMS

REMARKS:

1. THE ABOVE SCHEDULED CLOSED LOOP RECYCLE SYSTEM SHALL BE COMPLETELY SELF CONTAINED.
2. THE COMPLETE SYSTEM SHALL REQUIRE SINGLE PHASE, 208VAC AND 120 VAC POWER, TO CONTROL PANELS INSTALLED ON THE EQUIPMENT BY THE MANUFACTURER.
3. THE INSTALLED SYSTEM SHALL INCLUDE ALL PUMPS AND PIPING NECESSARY FOR TRANSFERING WATER FROM THE WASHBAY SUMP TO THE RS-1 SYSTEM, BETWEEN COMPONENTS OF THE SYSTEM, AND FOR THE SUPPLY OF RECYCLED WATER TO THE PRESSURE WASHER. FIELD PIPING SHALL BE INSTALLED USING SCHEDULE 80 PVC.
4. EACH COMPONENT SHALL INCLUDE COMPLETE CONTROLS AND WIRING FOR THE INTEGRATED OPERATION OF THE COMPLETE SYSTEM.
5. THE COMPLETE SYSTEM SHALL INCLUDE A PRESSURE WASHER. REFER TO SPECIFICATIONS FOR REQUIREMENTS.
6. SYSTEM SHALL INCLUDE THE ABILITY TO REMOVE OIL, GREASE, SUSPENDED SOLIDS AND EMULSIFIERS FROM THE WATER.
7. THE RECYCLED WATER SHALL BE FREE OF OIL TO A MAXIMUM CONCENTRATION OF 500 PPM. THE RECYCLED WATER SHALL HAVE A MAXIMUM CONCENTRATION OF SUSPENDED SOLIDS OF 100 PPM.
8. THE COMPLETE SYSTEM SHALL BE INSTALLED BY MANUFACTURER TRAINED AND CERTIFIED PERSONNEL TO MANUFACTURER'S SPECIFICATIONS AND RECOMMENDATIONS.
9. REFER TO SPECIFICATIONS FOR ADDITIONAL AND SPECIFIC REQUIREMENTS, INCLUDING TRAINING OF OWNER'S EMPLOYEES.
10. IF A SUBSTITUTION FOR THE SCHEDULED AND SPECIFIED SYSTEM IS ACCEPTED, THE CONTRACTOR SHALL BE RESPONSIBLE TO ASSURE THAT THE SYSTEM CONFIGURATION FITS WITHIN THE AVAILABLE SPACE AND THAT PIPING, CONTROL AND POWER REQUIREMENTS SPECIFIC TO THAT SYSTEM ARE ACCOMMODATED.

KEYED NOTES (FOR THIS SHEET ONLY) - ⬡

1. INSTALL BANDED CUT IN CORNER OF GRATE. INSTALL 3 EACH 3/4" PIPES AND 1 EACH 1-1/2" PIPE TO RS-1. OF THE 3 EACH 3/4" PIPES, ONE SHALL BE CONNECTED TO THE WATER SUPPLY (INDICATED BY KEYED NOTE 5), ONE SHALL BE TERMINATED IN THE SUMP FOR SUCTION WATER TO RS-1 AND ONE SHALL BE CONNECTED TO THE PRESSURE WASHER. THE 1-1/2" PIPE SHALL BE INSTALLED FROM THE RETURN/DRAIN BACK TO THE SUMP AND SHALL BE INSTALLED A MAXIMUM OF 8 INCHES A.F.F.
2. INSTALL 4" PVC DRAIN FOR FUTURE USE. SLOPE 1/4" PER FOOT AWAY FROM SUMP. PENETRATE GRADE BEAM WITH 6" PVC SLEEVE AND INSTALL DRAIN WITHIN SLEEVE. SEE STRUCTURAL FOR ADDITIONAL INFORMATION.
3. CAP PIPE 24" FROM CONCRETE APRON AND MARK WITH A SURVEY PIN.
4. STUB UP ABOVE SLAB INSIDE EQUIPMENT ROOM WITH 2" IRRIGATION LINE THRU SLEEVE. INSTALL A 2" BALL VALVE IN VERTICAL ABOVE SLAB.
5. MAKE UP WATER HOSE TO HOSE BIBB.
6. NOT USED.
7. EXTEND 10" TYPE "L" VENT FROM PRESSURE WASHER TO MINIMUM 24" ABOVE ROOF OF WASHBAY. TRANSITION AS NECESSARY FROM PRESSURE WASHER. PROVIDE WEATHERPROOF VENT CAP AND INSTALL AS RECOMMENDED BY MANUFACTURER.
8. HOSE FROM PRESSURE WASHER TO WAND (NOT SHOWN).
9. INSTALL 6" PVC SLEEVES IN WALL MINIMUM 1" A.F.F. TO BOTTOM OF SLEEVE. IF BOTTOM CELLS ARE FILLED SOLID WITH MORTAR, PENETRATIONS MAY BE CORED AS AN ALTERNATIVE CONSTRUCTION.
10. INSULATE ALL NON-POTABLE WATER PIPING TO PROTECT AGAINST FREEZING AS DESCRIBED IN THE GENERAL NOTES. LABEL ALL WATER PIPING IN WASHBAY AS NON-POTABLE ON PIPING AND ON THE INSULATION.
11. INSTALL SCHEDULED FLOORSINK WITHOUT TRAP. DRAIN DIRECTLY INTO PIT WITH 4" PVC AND A FLOWLINE OF 18" BELOW FINISHED FLOOR. SEAL PENETRATION OF PIT WALL WITH WATERSTOP AND SILICONE SEALANT.
12. EXTEND 6" TYPE "L" VENT FROM WATER EVAPORATOR TO MINIMUM 24" ABOVE ROOF OF EQUIPMENT ROOM. TRANSITION AS NECESSARY FROM EVAPORATOR. PROVIDE WATHERPROOF VENT CAP AND INSTALL AS RECOMMENDED BY MANUFACTURER.
13. COVER GRATING WITH POLYMER TYPE INSECT SCREEN, BUT DO NOT FASTEN TO GRATE. INSTALL WITH THIN BINDING ON ALL EDGES AND LOOSE CABLE TIES ON EACH CORNER.

SEE P2.2 FOR PLUMBING GENERAL NOTES

PLUMBING TRUCK WASH BAY

NOTE: THIS DRAWING WAS CREATED FOR PRODUCTION ON 22" x 34" SHEET SIZE. DO NOT SCALE PRINTS.

Texas Department of Transportation
125 E. 11th Street
Austin, Texas 78701-2483
(512) 416-3040
Copyright © 2005 Texas Department of Transportation

THIS DOCUMENT IS RELEASED FOR THE PURPOSE OF INFORMATION ONLY
NOT FOR REGULATORY APPROVAL, PERMITTING, OR CONSTRUCTION.

EDCOUCH MAINTENANCE FACILITY
HIDALGO COUNTY, EDCOUCH TEXAS
PHARR DISTRICT

Revisions

Drawn by: CON
Project No.
Date 05-26-2009
Sheet No.
P2.3
of 8P sheets

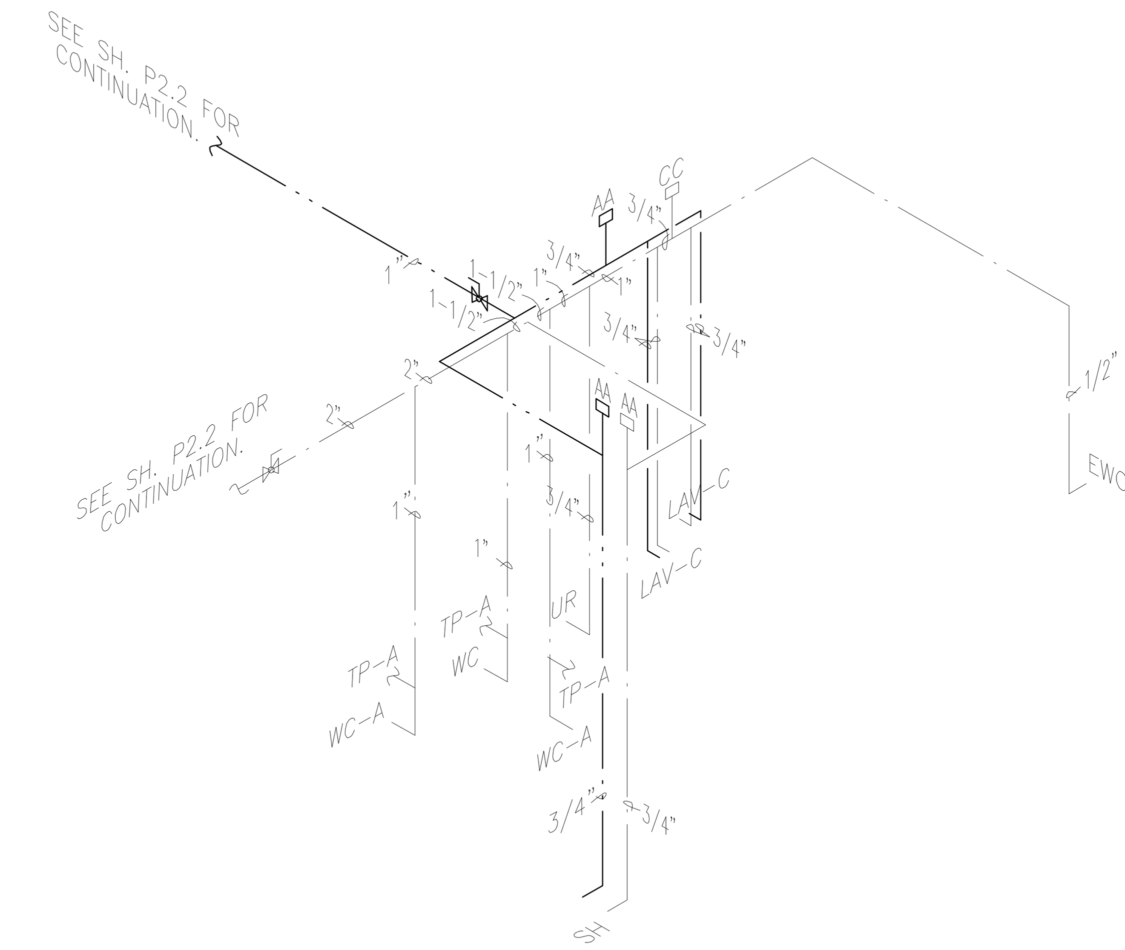

1 OFFICE BUILDING DOMESTIC WATER RISER
SCALE: NOT TO SCALE

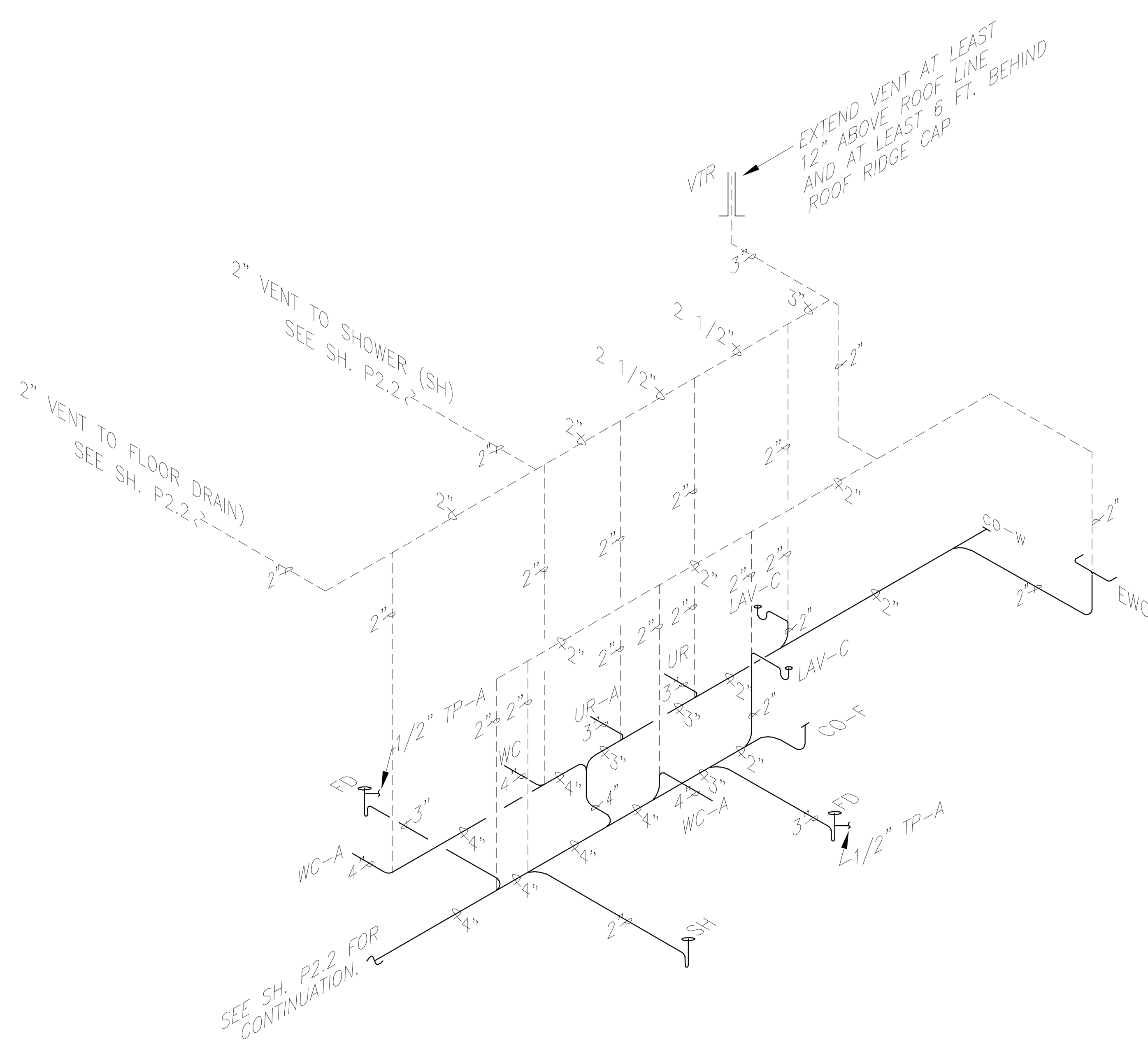

2 OFFICE BUILDING SANITARY SEWER RISER
SCALE: NOT TO SCALE

PLUMBING RISER DIAGRAMS - SANITARY SEWER & DOMESTIC WATER

NOTE: THIS DRAWING WAS CREATED FOR PRODUCTION ON 22" x 34" SHEET SIZE. DO NOT SCALE PRINTS.

CADFILE: T:\MNTFM\D02FTW\CSC4704-00-537\02-77-4704\00537\Acad\prototypical pdfs\edcouch\Acad\MEP\PLMB\P3_1_andP3_2.dwg Plotted: Fri, Aug. 07, 2009 @ 11:38 AM By: MBAZAN

Texas Department of Transportation
125 E. 11th Street
Austin, Texas 78701-2483
(512) 416-2046

Copyright © 2005 Texas Department of Transportation

THIS DOCUMENT IS RELEASED FOR THE PURPOSE OF INFORMATION ONLY
NOT FOR REGULATORY APPROVAL, PERMITTING, OR CONSTRUCTION.

EDCOUCH MAINTENANCE FACILITY
HIDALGO COUNTY, EDCOUCH TEXAS
PHARR DISTRICT

Revisions

Drawn by: CON
Project No.
Date 05-26-2009
Sheet No.
P3.1
of 8 P sheets

PLUMBING FIXTURE SCHEDULE

EQUIPMENT CONNECTIONS LISTED BELOW:					MANUFACTURER MODEL# WITH DESCRIPTION
SYMBOL	COLD	HOT	WASTE	VENT	
AA	3/4"	3/4"	N/A	N/A	WADE MODEL#5 SHOKSTOP WITH A FIXTURE UNIT CAPACITY RANGE 1–11, ALL STAINLESS STEEL CONSTRUCTION WITH WELDED NESTED BELLOWS. LOCATE ABOVE REMOVABLE TILE DROP CEILING OR ACCESSIBLE FROM ACCESS DOOR AS INDICATED ON RISER DIAGRAM.
BB	1"	1"	N/A	N/A	WADE MODEL#10 SHOKSTOP WITH A FIXTURE UNIT CAPACITY RANGE 12–32, ALL STAINLESS STEEL CONSTRUCTION WITH WELDED NESTED BELLOWS. LOCATE ABOVE REMOVABLE TILE DROP CEILING OR ACCESSIBLE FROM ACCESS DOOR AS INDICATED ON RISER DIAGRAM.
CC	1"	1"	N/A	N/A	WADE MODEL#20 SHOKSTOP WITH A FIXTURE UNIT CAPACITY RANGE 33–60, ALL STAINLESS STEEL CONSTRUCTION WITH WELDED NESTED BELLOWS. LOCATE ABOVE REMOVABLE TILE DROP CEILING OR ACCESSIBLE FROM ACCESS DOOR AS INDICATED ON RISER DIAGRAM.
RPZA	2"	N/A	N/A	N/A	WATTS MODEL#ES–U009QT 2" BRONZE BODY REDUCED PRESSURE ZONE ASSEMBLY IN A ABOVEGROUND INSULATED ENCLOSURE SECURED TO A CONCRETE FOUNDATION PAD WITH VALVE SUPPORTS AND A HINGED SINGLE DOOR MANUFACTERED BY PARK ENVIRONMENTAL EQUIPMENT COMPANY. VALVE SHALL BE EQUIPPED WITH THREADED CONNECTIONS, TWO RESILIENT SEATED QUARTER TURN BALL VALVES, BRONZE STRAINER. THE ASSEMBLY SHALL BE AWWAC511–92 AND UL CLASSIFIED.
CO–F	N/A	N/A	4"	N/A	WADE MODEL#6004TY,1,118 CAST IRON CLEANOUT W/ VANDAL PROOF NICKEL BRONZE SCORIATED TOP, BRONZE GASKET PLUG, FOR TY–SEAL INSTALLATION. WHEN INSTALLED OUTSIDE CLEANOUT SHALL BE ENCASED IN 3" THICK CONCRETE PAD 12" X 12" DIMENSION, WITH CAST IRON TOP. PROVIDE APPROPRATE TOP TO MATCH ARCHITECTURAL FLOOR FINISH SCHEDULE.
CO–W	N/A	N/A	4"	N/A	WADE MODEL#8554,E CAST IRON CLEANOUT FERRULE WITH SPIGOT OUTLET AND THREADED BRASS COUNTERSUNK BRASS PLUG INCLUDING WADE MODEL#8480R8 ROUND STAINLESS STEEL ACCESS COVER.
ES	1–1/4"	N/A	1–1/4"	N/A	BRADLEY MODEL#S19–310BF COMBINATION DRENCH SHOWER AND EYE/FACE WASH UNIT WITH FACE SPRAY RING BARRIER FREE MODEL. UNIT SHALL HAVE A 10ø" YELLOW IMPACT–RESISTANT PLASTIC SHOWER HEAD, SPRAYHEAD ASSEMBLY WITH TWIN EYE WASH HEADS WITH PROTECTIVE COVERS, 10ø" STAINLESS STEEL BOWL, CHROME PLATED FACE SPRAY RING WITH HAND AND FOOT OPERATED STAY OPEN CHROME PLATED BRASS BALL VALVES WITH PRESSURE COMPENSATING DEVICES. ALL PIPE AND FITTINGS SHALL BE GALVANIZED STEEL COATED WITH SAFETY YELLOW. PIPE DRAIN OUTLET TOWARD FLOOR DRAIN.
EWC	3/8"	N/A	1–1/2"	N/A	ELKAY MODEL#LZSTL8 WITH LKAPREZL APRON, SELF CONTAINED WALL HUNG ELECTRIC REFRIGERATED WATER COOLER TWO–LEVEL MODEL. 3.7 FULL LOAD AMPS, 325 WATTS. IREFER TO ARCHITECTURAL FOR MOUNTING HEIGHT TO MEET ADA REQUIREMENTS. PROVIDE AND INSTALL TRAP.
FD	N/A	N/A	3"	N/A	WADE MODEL#1103,TY,STD5,1–27 CAST IRON FLOOR DRAIN WITH INTEGRAL CLAMPING COLLAR, 5ø" ADJUSTABLE NICKEL BRONZE STRAINER, TRAP PRIMER AND SEDIMENT BUCKET. PROVIDE AND INSTALL TRAP.
FD–A	N/A	N/A	3"	N/A	WADE MODEL#1103,TY,STD5,1–27 CAST IRON FLOOR DRAIN WITH INTEGRAL CLAMPING COLLAR, 5ø" ADJUSTABLE NICKEL BRONZE STRAINER, TRAP PRIMER AND SEDIMENT BUCKET AND 4" DIA. FUNNEL, MODEL EF–4. PROVIDE AND INSTALL TRAP.
FD–C	N/A	N/A	4"	N/A	WADE MODEL#2374,TY,26 CAST IRON DEEP SUMP FLOOR DRAIN WITH SQUARE TOP AND LOOSE SET DUCTILE IRON GRATE. PROVIDE AND INSTALL TRAP.
FS	N/A	N/A	4"	N/A	WADE MODEL #9014–14 CAST IRON 8" ROUND FLOOR SINK WITH 6" SUMP, WHITE PORCELAIN COATED INTERIOR, PLASTIC DONE STRAINER AND NICKEL BRONZE TOP WITH HINGED GRATE. INSTALL WITH P–TRAP.
HB–FP	3/4"	N/A	N/A	N/A	WATTS MODEL#FHB–2–4, FROST–PROOF DRAINING WALL HYDRANT 3/4" INLET WITH VACUUM BREAKER. 3/4" HOSE THREAD OUTLET. SPECIFIED WALL THICKNESS IS 4 INCHES. INSTALL 24" A.F.F.
HB	3/4"	N/A	N/A	N/A	WATTS MODEL#SC8–4, 3/4" FEMALE NPT INLET CAST BRASS HOSE BIBB, WITH VACUUM BREAKER. INSTALL 24" A.F.F.
LAV–W	1/2"	1/2"	1–1/4"	N/A	AMERICAN STANDARD MODEL#0356.015, "LUCERNE" 20–1/2" X 18–1/4" WHITE VITREOUS CHINA WALL HUNG LAVATORY. CHICAGO FAUCETS #404CP LAVATORY FAUCET INCLUDES MODEL#E12 AERATOR AND MODEL#390 ADA–COMPLIANT CURVED LEVER HANDLES AND OFFSET LAVATORY STRAINER. SUPPLY AND INSTALL WITH STOPS AND BRAIDED STAINLESS STEEL RISER HOSES, "POWERS" HYDROGUARD THERMOSTATIC TEMPERING VALVE MODEL #LM495 SERIES. INSTALL ON EXTENDED–ARM, IN–WALL CARRIER BY WADE, ZURN, OR APPROVED EQUAL.
MS	3/4"	3/4"	3"	N/A	ACORN MODEL#TNC–24–BDS–CRS–OC–SH–SSC–TF2–KH36–KMH–KF–KWG–2–24" PRECAST TERRAZZO–WARE NEO–CORNER MOP SINK WITH STAINLESS STEEL WALL GAURDS, 36" HOSE AND MOP HANGER, ALL EXPOSED SURFACES SHALL BE FREE FROM PITS AND IMPERFECTIONS WITH A SEALED SURFACE. INTEGRAL DRAIN SHALL HAVE A STAINLESS STEEL STRAINER AND PROVIDE FOR AN INSIDE CAULKED CONNECTION TO A 3" PIPE WITH TRAP TO BE INSTALLED PER MANUFACTURER'S RECOMMENDATION. CHICAGO FAUCETS #897–RCF–369 ROUGH CHROME FINISH ADJUSTABLE SERVICE SINK FAUCET, PAIL HOOK WITH WALL SUPPORT, VACUUM BREAKER SPOUT, 3/4" HOSE THREAD OUTLET INTEGRAL STOP ARMS. MOUNT ON WALL 36" A.F.F.
SH	1/2"	1/2"	2"	N/A	CHICAGO FAUCETS MIXING VALVE MODEL# 2500–VOCCP, HOSE/HEAD/SLIDE BAR CHICAGO FAUCETS MODEL#151CR20035, VACUUM BREAKER/WALL SPOUT CHICAGO FAUCETS MODEL#778–9KJKCP. WHICH INCLUDES THE FOLLOWING: A TEMPSHIELD MIXING VALVE CAPABLE OF THERMOSTATIC & PRESSURE BALANCING INCLUDING INTEGRAL CHECK STOPS WITH A HAND HELD SHOWER USING A 69" METAL CLAD HOSE WITH 51" SLIDE BAR AND WALL SPOUT WITH VACUUM BREAKER. INSTALL IN ACCORDANCE TO ADA REQUIREMENTS.
SJ	N/A	N/A	N/A	N/A	OPW ENGINEERED SYSTEMS SWIVEL JOINT MODEL#3320–0201 2" BRONZE ONE–DIMENSIONAL SWIVEL JOINT, WITH BUNA–N–SEAL.
SK	1/2"	1/2"	1–1/2"	N/A	JUST MANUFACTURING, MODEL#SL–ADA–1921–A–GR, 18 GAUGE STAINLESS SINGLE BOWL SINK, DIMENSION 19" X 21" WITH CENTER DRAINS. CHICAGO FAUCETS # 201A–GN8AE3–370CPR SINK FAUCET, WITH BRAIDED STAINLESS STEEL RISER HOSES. CONTRACTOR SHALL PROVIDE AND INSTALL ADA–OFFSET SINK STAINLESS STRAINER.
SSK	3/4"	3/4"	2"	N/A	AMERICAN STANDARD MODEL#7692.008, 22" X 18" ACID RESISTING, WHITE ENAMELED CAST IRON DRILLED BACK WALL HUNG SERVICE SINK, WITH 2" CAST IRON TRAP STANDARD MODEL#7798.020, RIM GUARD MODEL#8379.018, CHICAGO FAUCETS #897–RCF–369 ROUGH CHROME FINISH ADJUSTABLE SERVICE SINK FAUCET, PAIL HOOK WITH WALL SUPPORT, VACUUM BREAKER SPOUT, 3/4" HOSE THREAD OUTLET INTEGRAL STOP ARMS.
TP–A	1/2"	N/A	N/A	N/A	SLOAN MODEL#VBF–72–A1–113 TP, VACUUM BREAKER TRAP PRIMER FOR USE WITH EXPOSED FLUSHOMETERS, ONE PIECE CHROME PLATED FLUSH CONNECTION; WATER DEFLECTOR TO CONTROL THE AMOUNT OF WATER DIVERTED FROM THE FLUSH; 3/8" ELBOW AND FLEX–BEND TUBE CONNECTION FROM VACUUM BREAKER TO WALL; DIVERTER WALL FLANGE AND FITTINGS; CHROME PLATED WALL FLANGE AND FITTING TO CONNECT 1/2" NPT PIPE; HIGH BACK PRESSURE VACUUM BREAKER; ONE–PIECE BOTTOM HEX COUPLING NUT; OR APPROVED EQUAL. INSTALL PER MANUFACTURERS RECOMMENDATIONS.
UR	3/4"	N/A	2"	N/A	AMERICAN STANDARD MODEL#6501.010 "WASHBROOK 1.0 GPF, BARRIER FREE WHITE VITREOUS CHINA SIPHON JET URINAL WITH 3/4" TOP INLET SPUD WITH SLOAN ROYAL FLUSH VALVE MODEL 186–1. MOUNT URINAL WITH TOP OF RIM AT 24" ABOVE FINISH FLOOR. INSTALL URNINAL ON IN–WALL UNIVERSAL CARRIER WADE MODEL#400 SERIES. INSTALL PER MANUFACTURERS' RECOMMENDATIONS.
UR–A (ADA)	3/4"	N/A	2"	N/A	AMERICAN STANDARD MODEL#6501.010 "WASHBROOK 1.0 GPF, BARRIER FREE WHITE VITREOUS CHINA SIPHON JET URINAL WITH 3/4" TOP INLET SPUD WITH SLOAN ROYAL FLUSH VALVE MODEL 186–1. MOUNT URINAL WITH TOP OF RIM AT 17" ABOVE FINISH FLOOR. INSTALL URNINAL ON IN–WALL UNIVERSAL CARRIER WADE MODEL#400 SERIES. INSTALL PER MANUFACTURERS' RECOMMENDATIONS.
WB	1/2"	N/A	N/A	N/A	IPS CORPORATION MODEL#82088, RECESSED ICE MAKER BOX WITH FACTORY INSTALLED VALVE 1/2" SWEAT CONNECTION.
WC	1"	N/A	4"	2"	AMERICAN STANDARD MODEL#2257.103, "AFWALL ELONGATED SIPHON JET ACTION FLUSH VALVE TOILET 1.6 GPF, WHITE VITREOUS CHINA WALL HUNG WITH RIM AT 15" A.F.F., 1–1/2" BRASS TOP SPUD. SLOAN ROYAL #111 FLUSH VALVE. REFER TO ARCHITECTURAL FOR MOUNTING HEIGHT. BENEKE #521HPSS ELONGATED WHITE OPEN FRONT SEAT WITHOUT LID. INSTALL TOILET ON NO–HUB SINGLE AND DOUBLE FIXED OFFSET VERTICAL CARRIER WADE MODEL#371SERIES. INSTALL CARRIER AND TOILET PER MANUFACTURERS' RECOMMENDATIONS.
WC–A (ADA)	1"	N/A	4"	2"	AMERICAN STANDARD MODEL#2257.103, "AFWALL ELONGATED SIPHON JET ACTION FLUSH VALVE TOILET 1.6 GPF, WHITE VITREOUS CHINA WALL HUNG WITH SEAT HEIGHT AT 17"–19" A.F.F. , 1–1/2" BRASS TOP SPUD. SLOAN ROYAL #111 FLUSH VALVE. REFER TO ARCHITECTURAL FOR MOUNTING HEIGHT. BENEKE #521HPSS ELONGATED WHITE OPEN FRONT SEAT WITHOUT LID. INSTALL TOILET ON NO–HUB SINGLE AND DOUBLE FIXED OFFSET VERTICAL CARRIER WADE MODEL#371SERIES. INSTALL CARRIER AND TOILET PER MANUFACTURERS' RECOMMENDATIONS.

PLUMBING FIXTURE SCHEDULE (continued)

EQUIPMENT CONNECTIONS LISTED BELOW:					MANUFACTURER MODEL# WITH DESCRIPTION
SYMBOL	COLD	HOT	WASTE	VENT	
TP–B	1/2"	N/A	N/A	N/A	ZURN MODEL #Z1021 WATER SAVER TRAP PRIMER, CHROME PLATED POLISHED CAST BRASS BODY WITH CLEANOUT, GROUND JOINT ELBOW WITH 1–1/2" NPT OUTLET; 1–1/2" SLIP NUTS AND WAHERS; REDUCING WASHER FOR 1–1/4" SINK TAIL PIECE HOOKUP, ESCUTCHEONS AND STAINLESS STEEL BRAIDED PRIMER HOSE WITH 1/2" FIP COMPRESSION FITTINGS; OR APPROVED EQUAL. INSTALL PER MANUFACTURERS RECOMMENDATIONS.

AIR COMPRESSOR SCHEDULE

MARK	MANUFACTURER, MODEL/SIZE	TANK SIZE (GALLONS)	TANK CONFIGURATION	MAX. HP	CAPACITY (CFM) @175 PSI	RPM	OUTLET SIZE	VOLT/HZ/PH	No. STAGES	MAX. PSI RATING	RATED FLOW SCFM	FILTRATION RATING (MICRONS)
COMP	INGERSOLL–RAND MODEL# 2545N7.5FP	80	VERTICAL	7.5	27.0	825	3/4" NPT	208/60/3	2	175	N/A	N/A
REG/GAUGE	INGERSOLL–RAND MODEL# R27241–600, WITH GAUGE	N/A	N/A	N/A	N/A	N/A	1/2" NPT	N/A	N/A	200	150	N/A
SEP	INGERSOLL–RAND MODEL# PS–060	1	N/A	N/A	N/A	N/A	3/4" NPT	N/A	N/A	N/A	60	N/A
P–FILTER	INGERSOLL–RAND MODEL# GP–123	N/A	N/A	N/A	N/A	N/A	3/4" NPT	N/A	N/A	N/A	123@100 PSI	1
A–FILTER	INGERSOLL–RAND MODEL# HE–123	N/A	N/A	N/A	N/A	N/A	3/4" NPT	N/A	N/A	N/A	123@100 PSI	0.01

REMARKS:

1. BOND COPPER COMPRESSED AIR PIPING WITH No. 8 AMERICAN WIRE GAUGE WITH COPPER PIPE CLAMPS TO NEAREST ABOVE SLAB DOMESTIC WATER PIPING.
2. AIR COMPRESSOR SHALL INCLUDE A FACTORY MOUNTED MOTOR STARTER, ADJUSTABLE PRESSURE SWITCH, CENTRIFUGAL UNLOADER AND AUTOMATIC RECIEVER TANK DRAIN.
3. AIR COMPPRESSOR PUMP SHALL BE 100% CAST IRON RATED FOR 15,000 HOURS.
4. START UP KIT SHALL BE INSTALLED AND PROVIDED GIVING THE CAPABILITY OF MAINTENANCE FOR ONE YEAR.
5. AIR COMPRESSOR SHALL HAVE A TWO YEAR PUMP WARRANTY AND FIVE YEAR RECIEVER TANK WARRANTY.
6. AUTO DRAIN RECIEVER TANK DRAIN VALVE AND AUTO DRAIN COMPRESSED AIR FILTERS SHALL DRAIN TO OIL/WATER SEPARATOR.
7. RIGID MOUNT OIL/WATER SEPARATOR ON GALVANIZED METAL CHAIR. OIL/WATER SEPARATOR DRAIN SHALL BE 18 INCHES ABOVE FINISHED FLOOR.
8. COMPRESSED AIR PIPING SHALL BE 3/4" TYPE "K" COPPER.
9. PROVIDE ONE SPARE REPLACEABLE FILTER ELEMENT WITH EACH COMPRESSED AIR FILTER.

ELECTRIC HOT WATER HEATER SCHEDULE

MARK	MANUFACTURER, MODEL/SIZE	GALLON CAPACITY	GPH RECOVERY @90° RISE	ELEMENT WATTAGE	FULL LOAD AMPERAGE	VOLT/HZ/PH	JACKET DIAMETER	TOTAL HEIGHT
EWH–65	MANUFACTURED BY AMERICAN MODEL#E62–65H–045DV INCLUDES METAL CHAIR MANUFACTURED BY WATTS, MODEL#AS–26	66	20.7	4,500	21.6	208/60/1	22"	59.25"

REMARKS:

1. WATER HEATERS SHALL BE UL 174 LISTED AND MEET OR EXCEED ASHRAE 90.1–2001.
2. ROUTE T&P RELIEF VALVE PIPING AS INDICATED IN PLANS.
3. PROVIDE AND INSTALL WATER HEATER DRAIN PAN. ROUTE DRAIN PIPING FOR DRAIN PAN AS INDICATED IN PLANS.
4. ALL DRAINS SHALL BE SHALL BE HARDDRAWN TYPE "K" COPPER.
5. PROVIDE AND INSTALL DRAIN PAN WITH DRAIN AND WATER HEATER GALVANIZED METAL CHAIR FOR EACH WATER HEATER, UNLESS NOTED OTHERWISE.
6. ALL HOT WATER HEATERS SHALL COME WITH A 6 YEAR LIMITED TANK AND PARTS WARRANTY.
7. INSTALL DIELECTRIC UNIONS AND HEAT TRAP CHECK VALVES ON HOT AND COLD WATER HOT WATER HEATER CONNECTIONS.
8. BOND HOT AND COLD WATER PIPING WITH No. 8 AMERICAN WIRE GAUGE WITH COPPER PIPE CLAMPS TO MAINTAIN GROUNDING FOR HOT WATER PIPING.
9. EACH ELECTRIC HOT WATER HEATER SHALL INCLUDE THE FOLLOWING: INTERNAL ANODE ROD, COLD WATER DIP TUBE WITH TOP WATER CONNECTIONS, AND BUILT IN ELECTRIC JUNCTION BOX READY FOR 3/4" CONDUIT CONNECTION.

Texas Department of Transportation
125 E. 11th Street
Austin, Texas 78701-2483
(512) 416-3048

Copyright © 2005 Texas Department of Transportation

THIS DOCUMENT IS RELEASED FOR THE PURPOSE OF INFORMATION ONLY
NOT FOR REGULATORY APPROVAL, PERMITTING, OR CONSTRUCTION.

EDCOUCH MAINTENANCE FACILITY
HIDALGO COUNTY, EDCOUCH TEXAS
PHARR DISTRICT

Revisions

Drawn by: CON
Project No.
Date 05-26-2009
Sheet No. P4.1 of 8P sheets

PLUMBING SCHEDULES

NOTE: THIS DRAWING WAS CREATED FOR PRODUCTION ON 22" x 34" SHEET SIZE. DO NOT SCALE PRINTS.

CADFILE: T:\MNTFMD02FTWC\BC4704-00-837\02-77-47040083?\Acad\prototypical pdfs\edcouch\Acad\MEP\PLMB\P4_1.dwg Plotted: Fri. Aug. 07, 2009 @ 11:39 AM By: MBAZAN

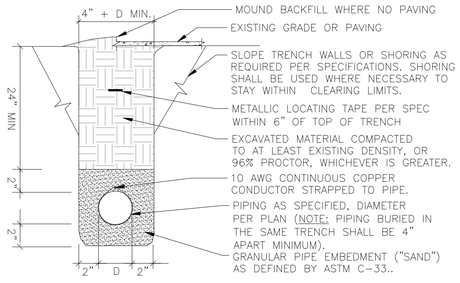

1 SEWER PIPING TRENCH
SCALE: NOT TO SCALE

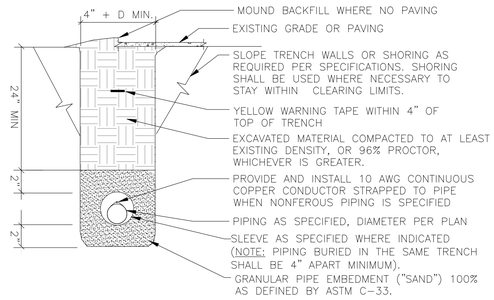

2 GAS PIPING TRENCH
SCALE: NOT TO SCALE

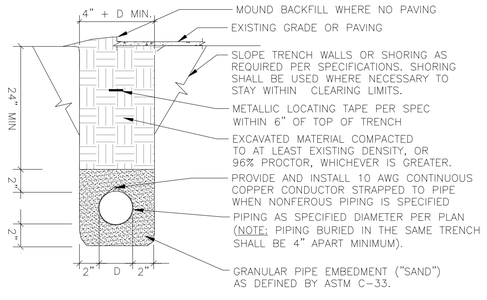

3 WATER PIPING TRENCH
SCALE: NOT TO SCALE

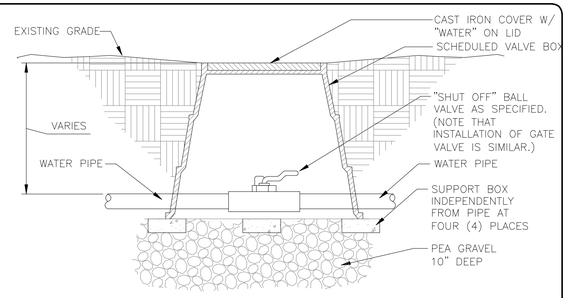

4 VALVE BOX & BALL VALVE IN SOIL
SCALE: NOT TO SCALE

5 DETAIL NOT USED
SCALE: NOT TO SCALE

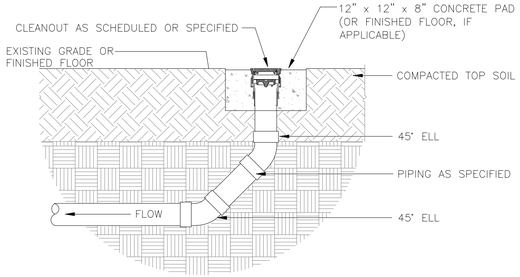

6 END OF LINE CLEAN OUT
SCALE: NOT TO SCALE

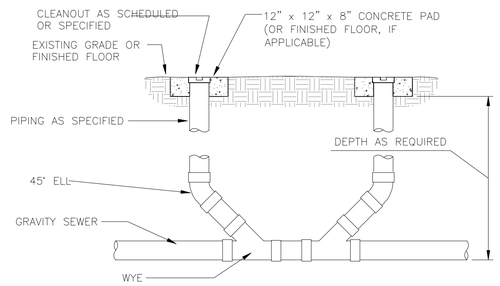

7 TWO WAY CLEAN OUT
SCALE: NOT TO SCALE

8 DETAIL NOT USED
SCALE: NOT TO SCALE

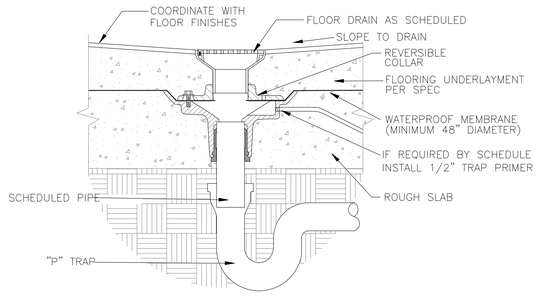

9 FLOOR DRAIN WITH TRAP PRIMER
SCALE: NOT TO SCALE

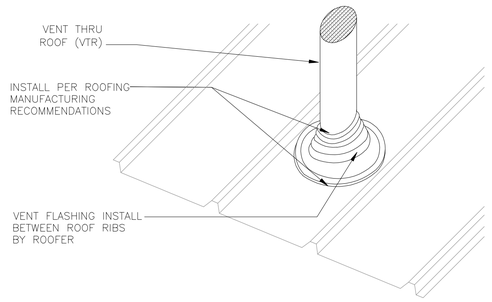

10 VENT THRU ROOF (VTR)
SCALE: NOT TO SCALE

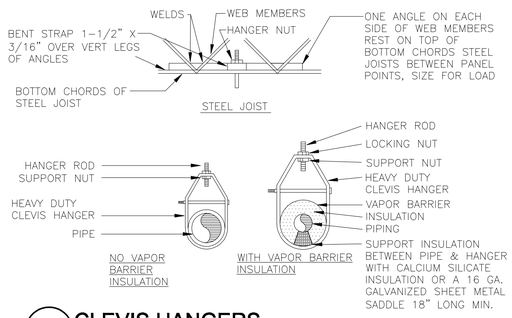

11 CLEVIS HANGERS
SCALE: NOT TO SCALE

Texas Department of Transportation
125 E. 11th Street
Austin, Texas 78701-2483
(512) 416-2000

Copyright © 2005 Texas Department of Transportation

THIS DOCUMENT IS RELEASED FOR THE PURPOSE OF
INFORMATION ONLY
NOT FOR REGULATORY APPROVAL, PERMITTING, OR CONSTRUCTION.

EDCOUCH MAINTENANCE FACILITY
HIDALGO COUNTY, EDCOUCH TEXAS
PHARR DISTRICT

Revisions

Drawn by: CON

Project No.

Date 05-26-2009

Sheet No. P5.1

of 8P sheets

PLUMBING DETAILS - 1

NOTE: THIS DRAWING WAS CREATED FOR PRODUCTION ON 22" x 34" SHEET SIZE. DO NOT SCALE PRINTS.

CADFILE: T:\NATP\RDGFTWC\SC4704-00-857\02-77-4704008537\Axref\proto\dgn\sel pdf\detroutsh\Axref\MEP-PLUMB\P5_1.dwg Plotted: Fri, Aug. 07, 2009 @ 11:39 AM By: MBAZAN

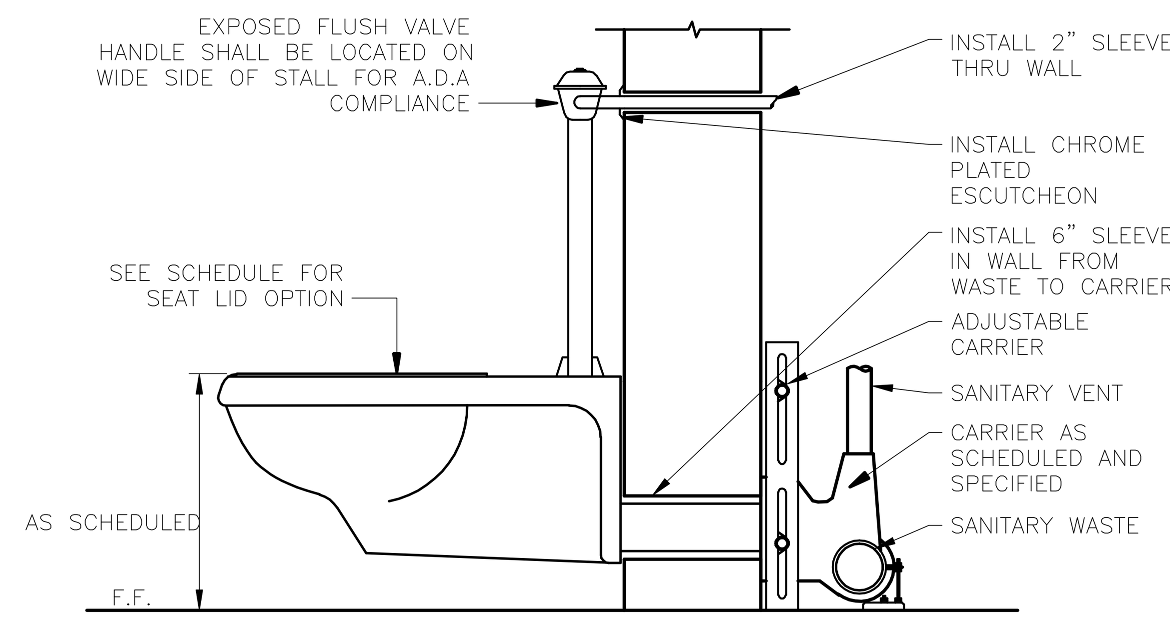

1 WALL HUNG W.C. W/ADJ CARRIER
SCALE: NOT TO SCALE

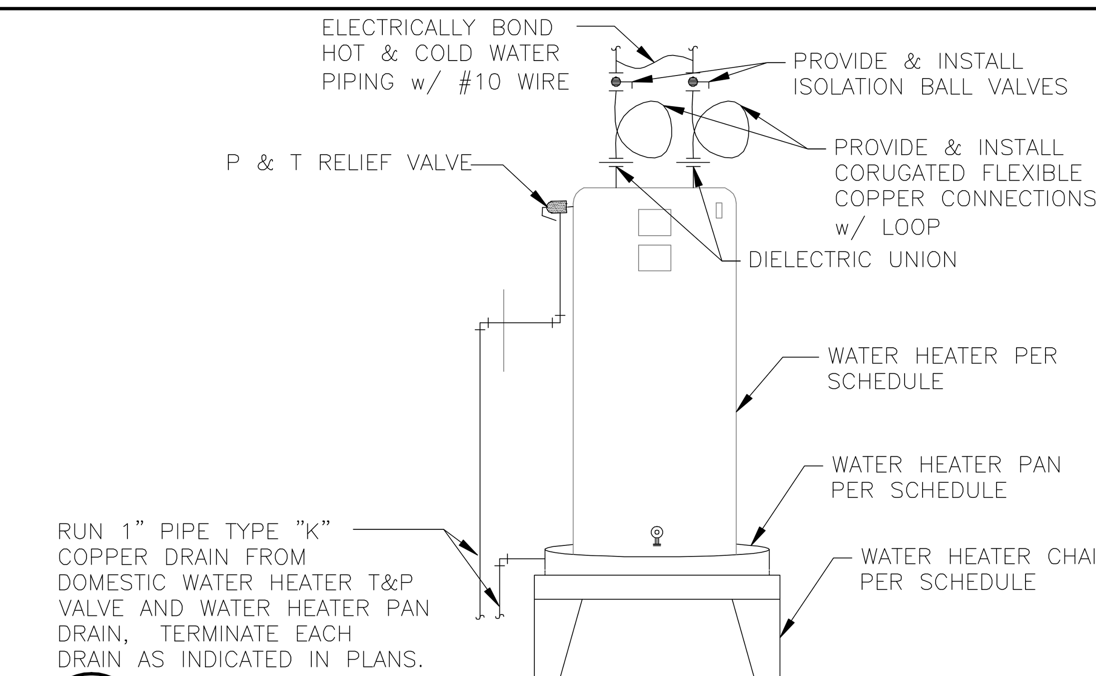

2 WATER HEATER ON CHAIR
SCALE: NOT TO SCALE

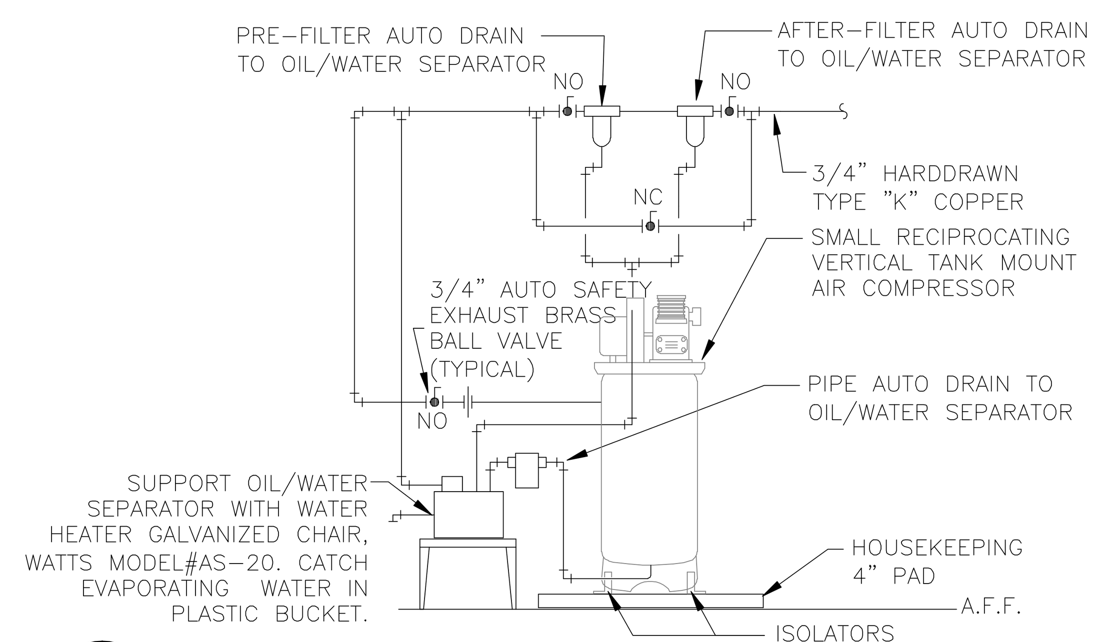

3 COMPRESSED AIR SYSTEM
SCALE: NOT TO SCALE

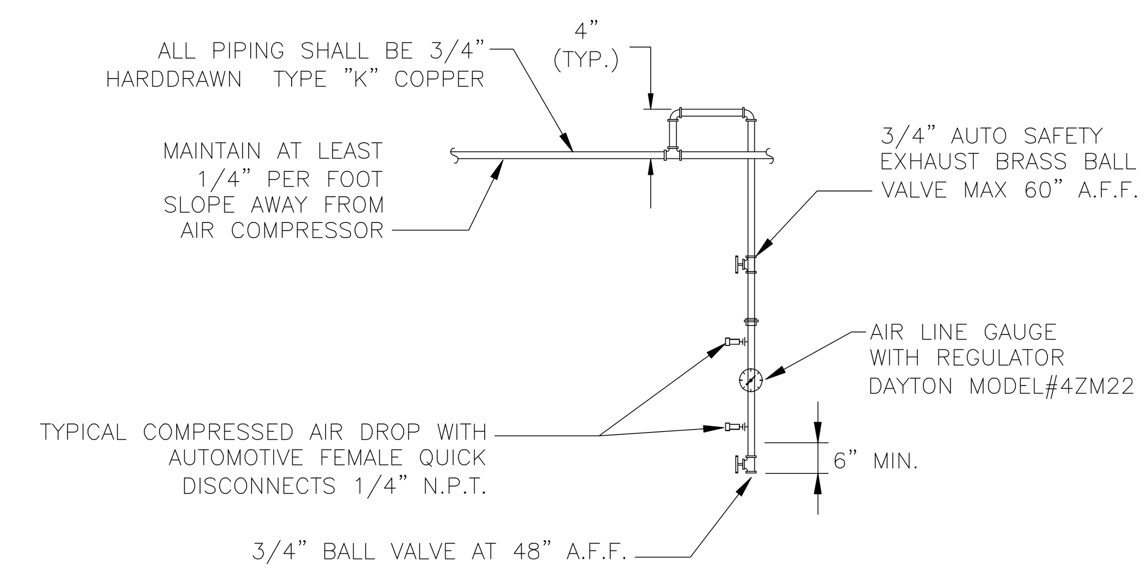

4 AIR DROP WITH QUICK DISCONNECT
SCALE: NOT TO SCALE

CADFILE: T:\MNTFM\D02FTW\CSC\704-00-537\02-77-4704008\7\Acad\prototypical pdfs\edcouch\Acad\MEP\PLMB\P5_2.dwg Plotted: Fri, Aug. 07, 2009 @ 11:30 AM By: MBAZAN

Texas Department of Transportation
125 E. 11th Street
Austin, Texas 78701-2483
(512) 416-2946
Copyright © 2005 Texas Department of Transportation

THIS DOCUMENT IS RELEASED FOR THE PURPOSE OF INFORMATION ONLY
NOT FOR REGULATORY APPROVAL, PERMITTING, OR CONSTRUCTION.

EDCOUCH MAINTENANCE FACILITY
HIDALGO COUNTY, EDCOUCH TEXAS
PHARR DISTRICT

Revisions

Drawn by: CON
Project No.
Date 05-26-2009
Sheet No.
P5.2
of 8P sheets

PLUMBING DETAILS - 2
NOTE: THIS DRAWING WAS CREATED FOR PRODUCTION ON 22" x 34" SHEET SIZE. DO NOT SCALE PRINTS.

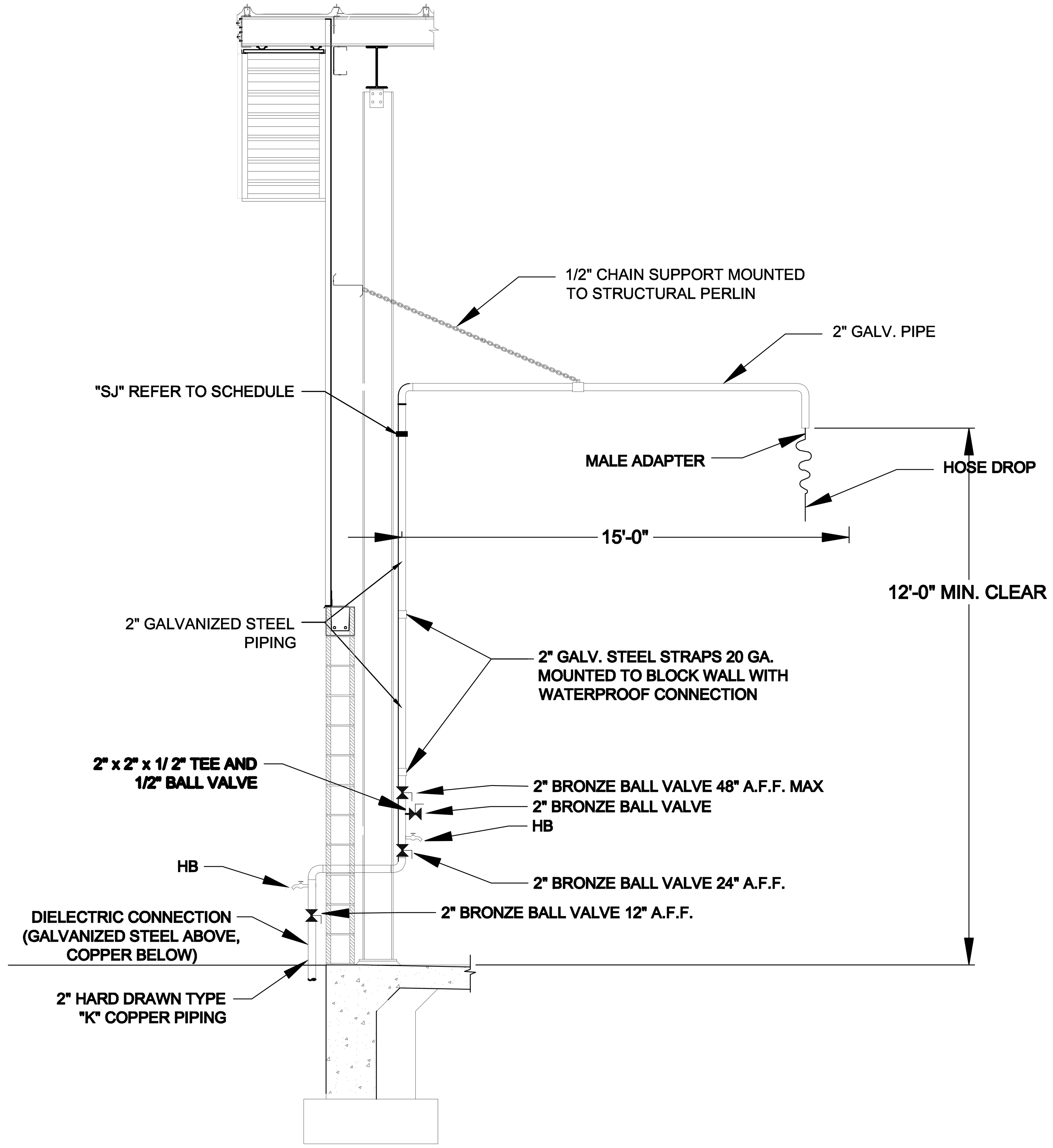

SIDE VIEW

1 TRUCK FILL STAND PIPE

SCALE: NOT TO SCALE

Texas Department of Transportation

THIS DOCUMENT IS RELEASED FOR THE PURPOSE OF INFORMATION ONLY NOT FOR REGULATORY APPROVAL, PERMITTING, OR CONSTRUCTION.

EDCOUCH MAINTENANCE FACILITY

HIDALGO COUNTY, EDCOUCH TEXAS

PHARR DISTRICT

Revisions

Drawn by:
CON

Project No.

Date
05-26-2009

Sheet No.
P5.3
of 8P sheets

PLUMBING DETAILS - 3

NOTE: THIS DRAWING WAS CREATED FOR PRODUCTION ON 22" x 34" SHEET SIZE. DO NOT SCALE PRINTS.

EDCOUCH MAINTENANCE FACILITY
PHARR DISTRICT 21
PROJECT NO: CBC-4704-00-884
DETAIL NUMBER: 21-77-470400884

SPECIFICATIONS INDEX

DIVISION 1 - GENERAL REQUIREMENTS

01001	Summary of Work
01002	Definitions and Standards
01003	Special Conditions
01004	Specification Outline
01200	Price and Payment Procedures
01300	Administrative Requirements
01320	Allowances
01321	Construction Progress Documentation
01330	Submittal Procedures
01400	Quality Control Requirements
01410	Testing Laboratory Services
01500	Temporary Facilities and Controls
01571	Temporary Erosion and Sediment Control
01600	Product Requirements
01630	Substitutions and Product Options
01700	Execution Requirements
01770	Closeout Procedures

DIVISION 2 - SITE WORK

02100	Site Clearing
02120	Selective Site Demolition
02200	Earthwork
02210	Geotechnical Data
02324	Trenching
02362	Termite Control
02446	Boring and Jacking
02512	Site Water Distribution
02516	Disinfection of Water Distribution
02538	Sanitary Sewer System
02741	Hot Mix Asphalt Paving / Striping
02751	Cement Concrete
02764	Pavement Joint Sealants
02780	Detectable Warning Pavers
02821	Chain Link Fences and Gates
02900	Grading
02925	Subgrade Preparation
02950	Parking Bumpers

DIVISION 3 - CONCRETE

03100	Concrete Forms and Accessories
03200	Concrete Reinforcement
03300	Cast-in-Place Concrete

03350 Concrete Finishing

DIVISION 4 - MASONRY

Not Used

DIVISION 5 – METALS

05312 Steel Roof Deck
05400 Cold-Formed Metal Framing
05500 Metal Fabrications

DIVISION 6 - WOOD AND PLASTIC

06114 Wood Blocking and Curbing
06200 Finish Carpentry
06410 Custom Cabinets

DIVISION 7 - THERMAL AND MOISTURE PROTECTION

07190 Water Repellents
07200 Board Insulation
07213 Batt Insulation
07260 Underslab Vapor Barrier
07270 Roof Underlayment Barrier
07413 Sheet Metal Roof / Wall and Soffit Panels
07614 Metal Roof Curbs
07840 Firestopping
07900 Joint Sealers

DIVISION 8 - DOORS AND WINDOWS

08110 Standard Steel Doors
08115 Standard Steel Frames
08212 Flush Wood Doors
08310 Access Doors and Panels
08333 Overhead Coiling Doors
08410 Aluminium Storefronts
08520 Aluminum Windows
08710 Door Hardware
08800 Glazing

DIVISION 9 - FINISHES

09111 Non-Load-Bearing Metal Framing System
09260 Gypsum Board Assemblies
09300 Tile
09510 Acoustical Ceilings
09650 Resilient Flooring
09900 Painting and Coatings
09910 Painting Fueling System

DIVISION 10 - SPECIALTIES

10170 Plastic Toilet Compartments
10200 Louvers and Vents
10350 Flagpoles
10440 Interior Signage
10500 Lockers
10523 Fire Extinguishers and Cabinets
10800 Toilet Accessories

DIVISION 11 - EQUIPMENT

11140 Fuel Dispensing System

DIVISION 12 - FURNISHINGS

12493 Horizontal Louver Blinds

DIVISION 13 - SPECIAL CONSTRUCTION

13120 Pre-Engineered Buildings

DIVISION 14 - CONVEYING SYSTEMS

Not Used

DIVISION 15 – MECHANICAL

15050 Basic Mechanical Requirements
15060 Supports and Anchors
15090 Piping Insulation
15097 Ductwork Insulation
15210 Reciprocating Air Compressors
15400 Plumbing, Piping, and Associated Materials
15490 Close Loop Water Recirculation System
15540 Fuel Fired Heaters
15761 Ductless Air Conditioning Systems
15767 Heat Pump Air Conditioning Systems
15810 Ductwork
15820 Ductwork Accessories
15830 Fans
15850 Air Outlets and Inlets
15950 Testing, Adjusting, and Balancing

DIVISION 16 – ELECTRICAL

16010 Basic Electrical Requirements
16011 Electrical Submittal and Close Out Documents
16060 Grounding and Bonding
16070 Electrical Hangers and Supports
16075 Electrical Identification
16123 Building Wire and Cable

16130 Raceway and Boxes
16140 Wiring Devices
16150 Wiring Connections
16210 Electrical Utility Service
16235 Engine Generators
16411 Enclosed Switches
16442 Panelboards
16491 Fuses
16510 Interior Luminaires
16520 Exterior Luminaires
16530 Emergency Lighting
16710 Telecommunications Cabling
16722 Gas Monitoring System

EDCOUCH MAINTENANCE FACILITY
PHARR DISTRICT

PROJECT NO: CBC-4704-00-884
DETAIL NUMBER: 21-77-470400884

LIST OF DRAWINGS

GENERAL

	COVER SHEET / INDEX
G1.1	ABBREVIATIONS AND SYMBOLS
G1.2	TEXAS ACCESSIBILITY STANDARDS

CIVIL:

C1.0	GENERAL NOTES
C1.1	GENERAL NOTES
C2.0	EXISTING CONDITIONS PLAN
C3.0	EROSION AND SEDIMENT CONTROL PLAN
C3.1	EROSION AND SEDIMENT CONTROL DETAILS
C3.2	EROSION AND SEDIMENT CONTROL DETAILS
C3.3	EROSION AND SEDIMENT CONTROL DETAILS
C3.4	EROSION AND SEDIMENT CONTROL DETAILS
C4.0	DEMOLITION PLAN
C5.0	SITE PLAN
C5.1	CIVIL DETAILS
C5.2	CIVIL DETAILS
C5.3	CIVIL DETAILS
C5.4	CIVIL DETAILS
C6.0	GRADING PLAN
C7.0	DIMENSIONAL CONTROL PLAN
C8.0	UTILITY PLAN
C8.1	UTILITY DETAILS
C8.2	UTILITY DETAILS
C8.3	UTILITY DETAILS
C8.3	UTILITY DETAILS

WATER:

W1.0	WATER SYSTEM IMPROVEMENTS – TRUCK WASH
W2.0	WATER SYSTEM DETAILS
W2.1	WATER SYSTEM DETAILS
W2.2	WATER SYSTEM DETAILS

STRUCTURAL:

S1.1	STRUCTURAL NOTES / ABBREVIATIONS
S1.2	STRUCTURAL NOTES
S2.1	FOUNDATION PLAN
S2.2	FUEL ISLAND:FOUNDATION PLAN & DETAILS
S2.3	ROOF FRAMING PLAN
S3.1	FOUNDATION DETAILS
S3.2	FOUNDATION DETAILS
S3.3	TYPICAL FOUNDATION DETAILS
S4.1	PRE-ENGINEERED FRAME ELEVATIONS

ARCHITECTURAL:

A1.0	LANDSCAPE / SPOT ELEVATION PLAN
A1.1	SITE PLAN
A1.2	SITE DETAILS
A1.3	GATE & FENCE DETAILS
A2.0	CODE COMPLIANCE SHEET
A2.1	FLOOR PLAN
A3.1	ROOF PLAN
A3.2	ROOF DETAILS

A4.1 REFLECTED CEILING PLAN
A5.1 EXT. ELEVATIONS
A6.1 ENLARGED PLANS-DRESS / RESTROOMS
A6.2 MILLWORK SECTIONS & DETAILS
A7.1 BUILDING SECTIONS
A7.2 BUILDING SECTIONS
A8.1 PARTITION TYPES
A8.2 WALL SECTIONS
A8.3 WALL SECTIONS
A8.4 WALL SECTIONS
A8.5 WALL SECTIONS
DOOR / WINDOW TYPES
A8.6 WALL SECTIONS
A8.7 WALL SECTIONS
A8.8 WALL SECTIONS
A8.9 WALL SECTIONS
A9.1 FINISH SCHEDULE / DOOR SCHEDULE
A9.2 DOOR DETAILS
A9.3 WINDOW AND DOOR DETAILS
A9.4 PLAN DETAILS
A9.5 DETAILS

MECHANICAL:

M2.0 MECHANICAL LEGEND / GENERAL NOTES / KEY NOTES
M2.1 MECHANICAL PLAN
M4.1 MECHANICAL SCHEDULES - 1
M4.2 MECHANICAL SCHEDULES - 2
M5.1 MECHANICAL DETAILS – 1

PLUMBING:

P1.1 SCHEDULES & NOTES
P2.1 PLUMBING PLAN
P2.2 PLUMBING PLAN
P2.3 PLUMBING PLAN
P3.1 PLUMBING RISER DIAGRAMS – SANITARY SEWER
P3.2 PLUMBING RISER DIAGRAMS – DOMESTIC WATER
P4.1 PLUMBING SCHEDULES
P5.1 PLUMBING DETAILS - 1
P5.2 PLUMBING DETAILS – 2
P5.3 PLUMBING DETAILS – 3

ELECTRICAL:

PE1.1 PLUMBING AND ELECTRICAL PLAN
E2.0 ELECTRICAL LEGEND / GENERAL NOTES / KEY NOTES
E2.1 LIGHTING PLAN
E2.2 POWER PLAN
E2.3 GAS DETECTION PLAN
E3.1 ELECTRICAL RISER DIAGRAM, LEGEND & LIGHTING SCHEDULE
E4.1 ELECTRICAL PANEL BOARD SCHEDULES
E5.1 ELECTRICAL DETAILS
E5.2 VOICE / DATA DETAILS

END

SECTION 01001
SUMMARY OF WORK

PART 1 - GENERAL

1.1 SECTION INCLUDES

A. Project Identification

B. Contract description

C. Work by the Texas Department of Transportation (Owner)

D. Owner supplied products

E. Contractor's use of site [and premises]

F. Owner occupancy

G. Specification Conventions

1.2 PROJECT IDENTIFICATION

TEXAS DEPARTMENT OF TRANSPORTATION
PHARR DISTRICT 21, HIDALGO COUNTY
Edcouch Maintenance Facility
SH 107, 1/4 mile East of FM 1015
Edcouch, Texas, Hidalgo County

1.3 CONTRACT DESCRIPTION

A. Work of the Project includes construction of four buildings and all related site work. Major components of site work consist of site roadways, parking lots, asphalt paving, concrete driveways, concrete curb and gutter, security fencing and gates, concrete walks, and connection of building to utility systems.

Building 1: Office Building / Shop / Vehicle Storage / Truck Wash. : Slab on grade foundation, with a pre-engineered metal building structure with roof purlins, roof insulation board and standing seam metal roof, metal studs and pre-finished metal panels exterior wall, forced air DX heating and cooling system.

The Work includes construction of a fuel station, slab on grade foundation with fuel tank and equipment. Also includes is an LPG tank furnished and installed by TxDOT. Slab on grade foundation with steel bollards for the LPG tank by general contractor

In general, the Work includes site clearing, earthwork, paving, fencing, site amenities, concrete foundation, pre-engineered metal building structural frame and roofing, masonry veneer on metal studs, pre-finished metal panels, aluminum windows and storefront, drywall interior partitions, hollow metal doors, pre-finished wood doors, ceramic tile, vinyl

composition flooring, carpet, paint, millwork, mechanical systems, plumbing systems, electrical systems, recycled water system and equipment installation as indicated in the Contract Documents

B. Perform Work of Contract under Lump Sum Total cost contract with Owner in accordance with Conditions of Contract.

1.4 WORK BY OWNER

A. Concurrent work by Owner or others: Owner reserves the right to conduct minor work with his own forces or separate contractors during the construction. Work will be coordinated with the contractor along the general demarcation line shown on the civil drawings.

1.5 OWNER SUPPLIED PRODUCTS

A. Owner will arrange for and deliver Owner-furnished items.

B. Owner will arrange and pay for delivery of Owner-furnished items according to Contractor's Construction Schedule.

C. If Owner-furnished items are damaged, defective, or missing, Owner will arrange for replacement.

D. Owner will furnish Contractor the earliest possible delivery date for Owner-furnished products. Using Owner-furnished earliest possible delivery dates, Contractor shall designate delivery dates of Owner-furnished items in Contractor's Construction Schedule.

E. Contractor shall review Shop Drawings, Product Data, and Samples and return them to Architect noting discrepancies or anticipated problems in use of product.

F. If Owner-furnished items are damaged as a result of Contractor's operations, Contractor shall repair or replace them.

1.6 CONTRACTOR'S USE OF SITE [AND PREMISES]

A. Access to Site: Contractor will have unrestricted access to site. Contractor shall have full use of premises for construction operations, including use of Project site, during construction period. Contractor's use of premises is limited only by Owner's right to perform work or to retain other contractors on portions of Project.

B. Construction Operations: Limited to areas noted on the drawings as the LIMITS OF CONSTRUCTION.

1.7 OWNER OCCUPANCY

A. The Owner will occupy the premises outside the limits of the construction site as denoted on the plans during the entire period of construction.

B. Cooperate with Owner to minimize conflict, and to facilitate Owner's operations.

1.8 SPECIFICATION CONVENTIONS

A. These specifications are written in imperative mood and streamlined form. This imperative language is directed to the Contractor, unless specifically noted otherwise. The words "shall be" are included by inference where a colon (:) is used within sentences or phrases. Except where specifically intended otherwise, the subject of all imperative statements is the Contractor. For example, 'Provide tile' means 'Contractor shall provide tile.'

1.9 CONTRACTOR

A. Permits and Fees: Apply for, obtain, and pay for permits, if applicable, fees, and utility company back charges required to perform the work. Submit copies to Owner.

B. Codes: Comply with applicable codes and regulations of authorities having jurisdiction. Submit copies of inspection reports, notices and similar communications to Owner. Primary code is the International Building Code, 2003.

C. Dimensions: Verify dimensions indicated on drawings with field dimensions before fabrication or ordering of materials. **Do not scale drawings.**

D. Existing Conditions: Notify Owner of existing conditions differing from those indicated on the drawings. Do not remove or alter structural components without prior written approval of the Architect.

E. Coordination:
1. Coordinate the work of all trades.
2. Prepare coordination drawings for areas above ceilings where close tolerances are required between building elements and mechanical and electrical work.
3. Verify location of utilities and existing conditions prior to beginning work.

F. Installation Requirements, General:
1. Inspect substrates and report unsatisfactory conditions in writing.
2. Do not proceed until unsatisfactory conditions have been corrected.
3. Take field measurements prior to fabrication where practical. Form to required shapes and sizes with true edges, lines and angles. Provide inserts and templates as needed for work of other trades.
4. Install materials in accordance with Manufacturer's instructions and approved submittals.
5. Install materials in proper relation with adjacent construction and with proper appearance.
6. Restore units damaged during installation. Replace units which cannot be restored at no additional expense to the Owner.
7. Refer to additional installation requirements and tolerances specified under individual specification sections.

G. Definitions:
1. Provide: Furnish and install, complete with all necessary accessories, ready for intended use. Pay for all related costs.

2. Reviewed: Review of items submitted. Not a limitation or release for compliance with the Contract Documents or regulatory requirements. Refer to limitations of 'Reviewed' in General and Supplementary Conditions.

H. Intent: Drawings and specifications are intended to provide the basis for proper completion of the work suitable for the intended use. Anything not expressly set forth but which is reasonable implied or necessary for proper performance of the project shall be included.

PART 2 - PRODUCTS (Not Used)

PART 3 - EXECUTION (Not Used)

END OF SECTION

SECTION 01002
DEFINITIONS AND STANDARDS

PART 1 - GENERAL

1.1 RELATED DOCUMENTS

A. Drawings and general provisions of Contract, including General and Supplementary Conditions and other Division 1 Specification Sections, apply to this Section.

1.2 SUMMARY: This section specifies administrative requirements for compliance with governing regulations, codes and standards.

A. Requirements include obtaining permits, licenses, inspections, releases and similar documentation, as well as payments, statements and similar requirements associated with regulations, codes and standards.

1.3 DEFINITIONS

A. General: Definitions contained in this Article are not necessarily complete, but are general to the extent that they are not defined more explicitly elsewhere in the Contract documents.

B. Indicated: Refers to graphic representations, notes or schedules on the Drawings, or other Paragraphs or Schedules in Specifications, and similar requirements in Contract Documents. Where terms such as "shown," "noted," "scheduled," and "specified" are used, it is to help locate the reference; not limitation on location is intended except as specifically noted.

C. Directed: Terms such as "directed," "requested," "authorized," "selected," "reviewed," "required," and "permitted" mean "directed by the Architect/Engineer," "requested by the Architect/Engineer," and similar phrases. However, no implied meaning shall be interpreted to extend the Architect/Engineer's responsibility into the Contractor's area of construction supervision.

D. Review: The term "reviewed" where used in conjunction with the Architect/Engineer's action on the Contractor's submittals, applications, and requests, is limited to the responsibilities and duties of the Architect/Engineer stated in General and Supplementary Conditions. Such review shall not release the Contractor from responsibility to fulfill Contract Document requirements, unless otherwise provided in the Contract Documents.

E. Regulation: The term "Regulations" includes laws, statutes, ordinances and lawful orders issued by authorities having jurisdiction, as well as rules, conventions and agreements within the construction industry that control performance of the Work, whether they are lawfully imposed by authorities having jurisdiction or not.

F. Furnish: The term "furnish" is used to mean "supply and deliver to the Project site, ready for unloading, unpacking, assembly, installation, and similar operations."

G. Install: The term "install" is used to describe operations at project site including the actual "unloading, unpacking, assembly, erection, placing, anchoring, applying, working to dimension, finishing, curing, protecting, cleaning and similar operations.

H. Provide: The term "provide" means "to furnish and install, complete and ready for use".

I. Installer: An "Installer" is an entity engaged by the Contractor, either as an employee, subcontractor or sub-subcontractor for performance of a particular construction activity, including installation, erection, application and similar operations. Installers are required to be experienced in the construction they are engaged to perform.
   1. The term "experienced," when used with the term "Installer" means having a minimum of 5 previous Projects similar in size and scope to this Project and familiar with the precautions required, and has complied with requirements of the authority having jurisdiction.

J. Project Site is the space available to the Contractor for performance of the Work, either exclusively or in conjunction with others performing other construction as part of the Project. The extent of the Project Site is shown on the Drawings, and may or may not be identical with the description of the land upon which the Project is to be built.

K. Testing Laboratories: A "testing laboratory" is an independent entity engaged to perform specific inspections or tests, either at the Project Site or elsewhere, and to report on, and, if required, to interpret results of those inspections or tests.

1.4 SPECIFICATION FORMAT AND CONTENT EXPLANATION: This Article is provided to help the user of these specifications understand the format, language, implied requirements, and similar conventions. None of the explanations shall be interpreted to modify the substance of Contract requirements.

A. Specification Format: These Specifications are organized into Divisions, Sections or Trade Headings based on the Construction Specifications Institute's 16 Division format and the MASTERFORMAT numbering system. This organization conforms generally to recognize construction industry practice.

B. Specification Content: This Specification has been produced employing conventions in the use of language and the intended meaning of certain terms, words, and phrases when used in particular situations or circumstances. These conventions are explained as follows:
   1. Language used in the Specifications and other Contract Documents is the abbreviated type. Implied words and meanings will be appropriately interpreted. Singular words will be interpreted as plural and plural words interpreted as singular where applicable and where the full context of the Contract Documents so indicates.
   2. Imperative Language is used generally in the Specifications. Requirements expressed imperatively are to be performed by the Contractor. At certain locations in the text, for clarity, subjective language is used to describe responsibilities that must be fulfilled indirectly by the Contractor or by others when so noted.

C. Assignment of Specialists: The Specifications requires that certain specific Construction activities shall be performed by specialists who are recognized experts in the operations

to be performed. The specialists must be engaged for those activities, and the assignments are requirements over which the Contractor has no choice or option. Nevertheless, the ultimate responsibility for fulfilling Contract requirements remains with the Contractor.

1. This requirement shall not be interpreted to conflict with enforcement of building codes and similar regulations governing the Work. It is also not intended to interfere with local trade union jurisdictional settlements and similar conventions.
2. Trades: Use of titles such as "carpentry" is not intended to imply that certain construction activities must be performed by accredited or unionized individuals of a corresponding generic name, such as "carpenter". It also does not imply that requirements specified apply exclusively to trades persons of the corresponding generic name.

1.5 DRAWING SYMBOLS

A. Graphic Symbols used on the Drawings are those recognized in the construction industry for purposes indicated. Where not otherwise noted, symbols are defined by "Architectural Graphic Standards," published by John Wiley & Sons, Inc., seventh edition.

B. Mechanical/Electrical Drawings: Graphic symbols used on mechanical and electrical Drawings are generally aligned with symbols recommended by ASHRAE. Where appropriate, they are supplemented by more specific symbols recommended by technical associations including, ASME, ASPE, IEEE and similar organizations. Refer instances of uncertainty to the Architect/Engineer for clarification before proceeding.

1.6 INDUSTRY STANDARDS

A. Applicability of Standards: Except where Contract Documents include more stringent requirements, applicable construction industry standards have the same force and effect as if bound or copied directly into Contract Documents. Such standards are made a part of the Contract Documents by reference. Individual Sections indicate which codes and standards the Contractor must keep available at the Project Site for reference.

1. Referenced standards take precedence over standards that are not referenced but recognized in the construction industry as applicable.
2. Non-referenced standards are not directly applicable to the Work, except as a general requirement of whether the Work complies with construction industry standards.
3. Non-referenced standards: Except as otherwise limited by the Contract Documents, standards not referenced by recognized in the industry as applicable will be enforced for performance of the Work. The Architect/Engineer will decide whether a code or standard is applicable, or which of several are applicable.

B. Publication Dates: Where compliance with an industry standard is required, comply with standard in effect as of date of Contract Documents.

1. Updated Standards: At the request of the Architect/Engineer, Contractor or authority having jurisdiction, submit a Change Order proposal where an applicable code or standard has been revised and reissued after the date of the Contract Documents and before performance of Work affected. The

Architect/Engineer will decide whether to issue a Change Order to proceed with the updated standard.

C. Conflicting Requirements: Where compliance with two or more standards is specified, and they establish different or conflicting requirements for minimum quantities or quality levels, the most stringent requirement will be enforced, unless the Contract Documents indicate otherwise. Refer requirements that are different, but apparently equal, and uncertainties as to which quality level is more stringent to the Architect/Engineer for a decision before proceeding.

1. Minimum Quantities or Quality Levels: In every instance the quantity or quality level shown or specified shall be the minimum to be provided or performed. The actual installation may comply exactly, within specified tolerances, with the minimum quantity or quality specified, or it may exceed that minimum within reasonable limits. In complying with these requirements, indicated numeric values are minimum or maximum values, as noted, or appropriate for the context of the requirements. Refer instances of uncertainty to the Architect/Engineer for decision **before** proceeding.

D. Copies of standards: Each entity engaged in construction on the Project is required to be familiar with industry standards applicable to that entities' Construction activity. Copies of applicable standards are not bound with the Contract Documents.

1. Where copies of standards are needed for performance of a required construction activity, the Contractor shall obtain copies directly from the publication source.
2. Although copies of standards needed for enforcement of requirements may be part of required submittals, the Architect/Engineer reserves the right to require the Contractor to submit additional copies as necessary for enforcement of requirements.

E. Abbreviations and Names: Trade association names and titles of general standards are frequently abbreviated. Where acronyms or abbreviations are used in the Specifications or other Contract Documents, they mean the recognized name of the trade association, standards generating organization, authority having jurisdiction or other entity applicable to the context of the text provision. Refer to the "Encyclopedia of Associations," published by Gale Research Co., available in most libraries.

F. Abbreviations and Names: Trade association names and titles of general standards are frequently abbreviated. The following acronyms as referenced in Contract Documents are defined to mean the associated names. Names and addresses are subject to change, and are believed to be, but are not assured to be, accurate as of date of Contract Documents:

1.	AASHTO	American Association of State Highway and Transportation Officials 444 No. Capitol St., Suite 225, Washington, DC 20001	202-624-5800
2.	ACI	American Concrete Institute, P. O. Box 19150 Detroit, MI 48219	313-532-2600
3.	ACIL	American Council of Independent Laboratories 1725 K Street, NW	202-887-5872

		Washington, DC 20006	
4.	ACPA	American Concrete Pipe Association 8320 Old Courthouse Road Vienna, VA 22180	703-821-1990
5.	AGA	American Gas Association 1515 Wilson Blvd. Arlington, VA 22209	703-841-8400
6.	AI	Asphalt Institute Asphalt Institute Building College Park, MD 20740	301-277-4258
7.	AIA	American Institute of Architects 1735 New York Ave., NW Washington, DC 20006	202-626-7300
8.	AIHA	American Industrial Hygiene Association 475 Wolf Ledges Parkway Akron, OH 44311	216-762-7294
9.	AISC	American Institute of Steel Construction 400 No. Michigan Ave., 8th Floor Chicago, IL 60611	312-670-2400
10.	AISI	American Iron and Steel Institute 1000 Sixteenth St., N.W. Washington, DC 20036	202-452-7100
11.	ALI	Associated Laboratories 641 So. Vermont Street Palatine, IL 60067	312-358-7400
12.	ANSI	American National Standards Institute 1430 Broadway New York, NY 10018	212-354-3300
13.	API	American Petroleum Institute 1220 L Street, N.W. Washington, DC 20005	202-682-8000
14.	ASC	Adhesive and Sealant Council 1500 Wilson Blvd., Suite 515 Arlington, VA 22209	703-841-1112
15.	ASME	American Society of Mechanical Engineers 345 East 47th St. New York, New York 10017	212-705-7722
16.	ASPE	American Society of Plumbing Engineers 3617 Thousand Oaks Blvd., Suite 210 Westlake, CA 91362	805-495-7120
17.	ASSE	American Society of Sanitary Engineering P. O. Box 40362 Bay Village, OH 44140	216-835-3040
18.	ASTM	ASTM 1916 Race St. Philadelphia, PA 19103	215-599-5400

19.	AWS	American Welding Society P. O. Box 351040 550 Le Jeune Road, NW Miami, FL 33135	305-443-9353
20.	AWWA	American Water Works Association 6666 W. Quincy Ave. Denver, CO 80235	303-794-7711
21.	CRSI	Concrete Reinforcing Steel Institute 933 Plum Grove Road Schaumburg, IL 60195	312-490-1700
22.	IEEE	Institute of Electrical and Electronic Engineers 345 E. 47th St. New York, NY 10017	607-723-3531
23.	ISA	Instrument Society of America P. O. Box 12277 67 Alexander Drive Research Triangle Park, NC 27709	919-549-8411
24.	LPI	Lightning Protection Institute P. O. Box 458 Harvard, IL 60033	815-943-7211
25.	MCAA	Mechanical Contractor's Association of America 5410 Grosvenor Lane, Suite 120 Bethesda, MD 20814	301-897-0770
26.	MSS	Manufacturers Standardization Society of the Valve and Fittings Industry 127 Park St., NE Vienna, VA 22180	703-281-6613
27.	NAPA	National Asphalt Pavement Association Calvert Building, Suite 620 6811 Kenilworthy Ave. Riverdale, MD 20737	301-779-4880
28.	NEC	National Electric Code (by NFPA)	
29.	NECA	National Electrical Contractors Association 7315 Wisconsin Ave. Bethesda, MD 20814	301-657-3110
30.	NEMA	National Electrical Manufacturers Association 2101 L Street, NW, Suite 300 Washington, DC 20037	202-457-8400
31.	NFPA	National Fire Protection Association Batterymarch Park Quincy, MA 02269	617-770-3000
32.	NPCA	National Paint and Coatings Association 1500 Rhode Island Ave., NW Washington, DC 20005	202-462-6272
33.	PDI	Plumbing and Draining Institute	317-251-5298

		(c/o Austin O. Roche, Jr.) 5342 Boulevard Pl. Indianapolis, IN 46208	
34.	PEI	Petroleum Equipment Institute 6514 East 69th St. Tulsa, OK 74133-1719	918-494-9696
35.	SSPC	Steel Structures Painting Council 4400 Fifth Avenue Pittsburgh, PA 15213	412-578-3327
36.	UL	Underwriters Laboratories 333 Pfingsten Rd. Northbrook, IL 60062	312-272-8800
37.	WRI	Wire Reinforcement Institute 8361 A Greensboro Drive McLean, VA 22102	703-790-9790
38.	WSC	Water Systems Council 600 S. Federal St., Suite 400 Chicago, IL 60605	312-922-6222
39.	WWPA	Woven Wire Products Association 2515 No. Nordica Ave. Chicago, IL 6063	312-637-1359

G. Federal Government Agencies: Names and titles of federal government standard or Specification producing agencies are frequently abbreviated. The following acronyms or abbreviations referenced in the Contract Documents indicate names of standard or Specification producing agencies of the federal government. Names and addresses are subject to change, but are believed to be, but are not assured to be, accurate and up-to-date as of the date of the Contract Documents.

1.	CE	Corps of Engineers (US Dept. of the Army) Chief of Engineers - Referral Washington, DC 20314	202-693-6456
2.	CFR	Code of Federal Regulations Available from the Government Printing Office North Capitol Street Between G and H Streets, NW Washington, DC 20402 (Material is usually first published in the Federal Register)	202-783-3238
3.	CPSC	Consumer Product Safety Commission 1111 Eighteenth St., NW Washington, DC 20207	202-634-7700
4.	CS	Commercial Standard US Dept. of Commerce Government Printing Office Washington, DC 20402	202-377-2000
5.	DOC	Department of Commerce 14th St and Constitution Ave., NW Washington, DC 20230	202-377-2000

6.	DOT	Department of Transportation 400 Seventh St. SW Washington, DC 20590	202-426-4000
7.	EPA	Environmental Protection Agency 401 M St., SW Washington, DC 20460	202-829-3535
8.	FS	Federal Specification (General Services Administration) Specifications Unit (WFSIS) 7th and D St., SW Washington, DC 20406	202-472-2205 202-472-2140
9.	GSA	General Services Administration F Street and 18th St., NW Washington, DC 20405	202-655-400
10.	MIL	Military Standardization Documents (US Department of Defense) Naval Publications and Forms Center 5801 Tabor Ave. Philadelphia, PA 19120	
11.	NBS	National Bureau of Standards (US Dept. of Commerce) Gaithersburg, MD 20234	301-921-1000
12.	OSHA	Occupational Safety and Health Administration (US Dept. of Labor) Government Printing Office Washington, DC 20402	202-783-3238
13.	PS	Product Standard of NBS (US Dept. of Commerce) Government Printing Office Washington, DC 20402	202-783-3238

1.7 GOVERNING REGULATIONS/AUTHORITIES: The Architect/Engineer has contacted authorities having jurisdiction where necessary to obtain information necessary for the preparation of Contract Documents; that information may or may not be of significance to the Contractor. Contact authorities having jurisdiction directly for information and decisions having a bearing on the Work.

A. Copies of Correspondence: During preparation of the Contract Documents, the Architect/Engineer has maintained a file containing correspondence with authorities having jurisdiction. This file is available at the Architect/Engineer's office for reference. If requested, the Architect/Engineer will provide copies of correspondence at cost of reproduction.

B. Copies of Regulations: Obtain copies of the following regulations and retain at the Project Site, available for reference by parties who have a reasonable need for such reference.

C. Trade Union Jurisdictions: The Contractor shall maintain, and require subcontractors to maintain complete current information on jurisdictional matters, regulations and pending actions, as applicable to construction activities. The manner in which Contract

Documents have been organized and subdivided is not intended to indicate of trade union or jurisdictional agreements.

1. Discuss new developments at Project meetings at the earliest feasible dates. Record relevant information and actions agreed upon.
2. Assign and subcontract construction activities, and employ tradesmen and laborers, in a manner that will not unduly risk jurisdictional disputes that could result in conflicts, delays, claims and losses.

1.8 SUBMITTALS

A. Permits, Licenses, and Certificates: For the Owner's records, submit copies of permits, licenses, certifications, inspection reports, releases, jurisdictional settlements, notices, receipts for fee payments, judgments, and similar documents, correspondence and records established in conjunction with compliance with standards and regulations bearing upon performance of the Work.

PART 2 - PRODUCTS (Not Used)

PART 3 - EXECUTION (Not Used)

END OF SECTION

SECTION 01003
SPECIAL CONDITIONS

PART 1 - GENERAL

1.1 SCOPE AND RELATED DOCUMENTS

A. These Special Conditions are applicable to the entirety of the work and shall be subject to the requirements of the Uniform General Conditions of the Contract, as well as the Supplementary General Conditions and other Specification Sections. This Section shall in no way define or limit the responsibilities for the work or any portion thereof to any one contracting or subcontracting entity.

B. This Section contains the following requirements:
1. General Contract Requirements
2. Time of Completion
3. Site Visitation prior to Bid
4. Wage Rates
5. Fees, Permits, Notices
6. Existing site vegetation protection plans
7. Protection of Property, Utilities and Personnel
8. Storage of Materials
9. Security
10. Cutting, Patching and Installation of Sleeves
11. Precedence of Contract Documents and Necessary Work
12. Contractor’s Representatives and Equipment
13. Asbestos or Lead Hazards
14. Construction Layout
15. Environmental Conditions
16. Warranty

C. Refer to Section 01001 Summary of Work for these project related topics:
1. Project/Work Identification
2. General Descriptions of the Scope of Work

D. Refer to Section 01500 Temporary Facilities and Controls:
1. Temporary Field Office and Storage Area
2. Temporary Facilities and Utilities

1.2 THE CONTRACT AND CONTRACTOR

A. The materials to be furnished and the labor to be performed in conjunction with the construction and completion of this project are to be performed under a SINGLE UNIT BID PRICE of the Contract.

B. The Contractor's work includes the furnishing of all materials, labor, permits, machinery, tools, and supplies and to construct the project in accordance with the Contract Documents.

1.3 TIME OF COMPLETION

A. The Contractor agrees to commence work on or before the date to be specified in a written "Notice to Proceed" to be issued by the Owner and to complete construction of all improvements, as required by the Contract Documents.

B. Contractor further agrees that should he fail to complete the work within the time limits specified herein or as subsequently adjusted as provided in the General Conditions of Agreement, he shall pay the liquidated damages for each consecutive calendar day thereafter as provided in Article VI. Supplementary General Conditions.

1.4 SITE VISITATION AND INSPECTION

A. Contractor shall visit the site prior to submitting his Bid to acquaint himself with all work to be performed under this contract.

B. The Contractor shall verify all existing items indicated on plans and/or specified, and familiarize himself with the existing work conditions, hazards, grades, existing utility services and conditions which affect his work. The submission of bids shall be deemed evidence of such visits. All proposals shall take these existing conditions into consideration, and the lack of specific information on the Drawings shall not relieve the Contractor of any responsibility.

1.5 WAGE RATES

A. Refer to wage rates furnished and incorporated into these Specifications. Wage rates shown within these schedules shall be maintained as a requirement for the duration of the Contract.

1.6 FEES, PERMITS AND NOTICES

A. Unless otherwise provided in the Contract Documents, the Contractor shall secure and pay for all permits and governmental fees, licenses and inspections necessary for the proper execution of the Work.

B. No local building permits will be required for this project for work on State property.

C. Removal of Temporary Fences: Prior to request for final payment, Contractor shall remove all temporary buildings, fencing, etc., and restore construction yard area and storage area site and any related access drives to their original condition.

D. Existing Vegetation Protection: Contractor shall coordinate protection of existing site vegetation.

1.7 PROTECTION OF PROPERTY, UTILITIES AND PERSONNEL

A. General:

1. The Contractor shall provide all equipment and labor necessary to protect all workers, building personnel and the general public from hazards associated with the contract. The Owner and the Architect shall not be held responsible for failure of the Contractor to perform the job in a safe manner.
2. The Contractor shall be responsible for initiating, maintaining, and supervising safety precautions and programs associated with the work. It shall be the duty and responsibility of the Contractor to comply with all pertinent sections of the Occupational Safety and Health Act of 1975, and all amendments thereto. Provide appropriate safety measures with regard to open shaft barricades, staging, scaffolding and similar operations this project may require.
3. Trench Safety: Contractor shall comply with Trench Safety requirements contained in the Uniform General Conditions and Supplemental General Conditions. The Contractor shall ensure that all vertical embankments are graded to the minimum recommended angle of repose for the soils encountered for that specified backfill is placed and compacted in such areas to eliminate the possibility of soil collapse.
4. Remove all fences, temporary structures, barricades, etc. Replace all vegetation damaged by construction operations, including grass, shrubs, trees, to the satisfaction of the Owner. Contractor shall coordinate protection of existing trees and vegetation.

B. Protection of Utilities:
1. The Contractor shall be solely responsible for the location and protection of any and all utility lines in the work area. The Contractor shall exercise due care to locate and to mark, uncover or otherwise protect all such lines in the construction zone and any of the Contractor's work or storage areas. Upon request, the Owner shall provide such information he has about the location and grade of water, sewer, gas and telephone and electric lines and other utilities in the work area, but such information shall not relieve the Contractor's obligation hereunder which shall be primary and non delegable.
2. The Contractor shall indemnify or reimburse such expenses or costs that may result from the unauthorized or accidental damage to all existing utility lines in the work area.
3. Unknown Utility Lines: In case utility lines are found which are not shown on the contract drawings, and if the lines need to be cut or removed, the Contractor shall be responsible for determining whether or not the lines are "active" or "abandoned".
4. Contractor shall notify “One-Call” systems for public utility information within the public R.O.W. and immediately adjacent to project property lines.

C. Safety: The Contractor shall take all reasonable precautions for the safety of, and shall provide all reasonable protection to prevent damage, injury, or loss to the following:
1. All employees on the work, and the general public, who may be affected by work on this project.

2. The Contractor shall comply with all applicable laws, ordinances, rules, regulations and lawful orders of any public authority having jurisdiction for the safety of persons or property or to protect them from damage, injury or loss. He shall erect and maintain, as required by existing conditions and progress of the work, all reasonable safeguards for safety and protection, including posting danger signs and other warnings against hazards, erecting protective fencing, overhead protection, barricades or similar pedestrian safety measures, promulgating safety regulations and notifying owners and users of utilities. All damage or loss claimed to any property referred to in this article caused in whole or in part by the Contractor, or Subcontractor, or anyone directly or indirectly employed by any of them, or by anyone for whose acts any of them may be liable, shall be the sole responsibility of the Contractor and shall be remedied by the Contractor.
3. All machinery and equipment and other physical hazards shall be guarded in accordance with the "Manual of Accident Prevention in Construction" of the Associated General Contractors of America except where incompatible with Federal, State or Municipal laws or regulations. The Contractor shall provide such machinery guards, safe walkways, ladders, bridges, gangplanks and other safety devices. The safety precautions actually taken and their adequacy shall be the sole responsibility of the Contractor, acting at his discretion as an independent Contractor.
4. Contractor shall comply with Trench Safety requirements contained in the Uniform General Conditions.
5. The Contractor shall remove all temporary barricades and protection devices upon completion of the work.

D. Protection of Work:

1. Protect all the work and all materials and equipment to be incorporated therein, whether in storage on or off the site, under the care, custody or control of the Contractor or any of his Subcontractors or Sub-Subcontractors.
2. Each Contractor shall properly and effectively protect all materials and equipment furnished by him during and after their installation. Building materials, Contractor's equipment, etc., may be stored on the premises, but the placing of same shall be within a secure area. Each Subcontractor shall protect and be responsible for any damage to his work or material, from the date of the agreement until the final payment is made, and shall make good without cost to the Owner, any damage to his work or material, from the date of the agreement until the final payment is made, and shall make good without cost to the Owner, any damage or loss that may occur during this period. The Contractor shall handle all material as directed, such that materials may be inspected by the Architect or Owner's Representative. All cement, lime and other material affected by weather shall be covered and protected to keep them free from damage while they are being transported to the site and when they are stored on the site.
3. During the execution of the Work, open ends of all piping and conduit and all openings in equipment shall be closed before leaving the Work at

any time, so as to prevent the entrance of all foreign matter. No trash is to be allowed to accumulate.

4. All heating, ventilating, plumbing and electrical equipment shall be protected during the execution of the Work.
5. All plumbing fixtures shall be protected and shall be boarded over so that they cannot be used by workmen or others. All drains shall be covered until placed in service to prevent the entrance of foreign matter.

1.8 FURNISHING AND STORAGE OF MATERIALS

A. Except as otherwise specified, the Contractor shall furnish at his own cost and risk, all tools, apparatus, hoists, derricks, and Subcontractors shall arrange with the General Contractor for the use of same. Temporary equipment shall be installed in such a manner that finish work will not be damaged by smoke, falling mortar, concrete or other causes.

B. All temporary shoring required for the installation of work shall be included in this Contract and the General Contractor must assume all responsibility for this work and make good any damage caused by improper supports or failure of shoring in any respect.

C. Storage of materials to be used in the contract is the responsibility of the Contractor. The Owner may provide an area to store materials. The security of the storage area is the responsibility of the Contractor. Contractors are encouraged to limit storage of materials to a minimum. Material storage is not allowed for pesticides and other hazardous materials that are the property of the Contractor.

1.9 SECURITY

A. The Contractor shall be totally responsible for providing security for his materials, tools and equipment, and for any work in progress. If Contractor's personnel must leave an uncompleted and unsecured work area (overnight, lunch, etc.) unattended, then they must remove all tools, equipment, materials, and thoroughly close up or secure uncompleted work.

B. Site Security: Contractor shall make arrangements for and pay the cost of providing security of exterior premises if vandalism becomes a problem.

1.10 CUTTING, PATCHING, AND INSTALLATION OF SLEEVES

A. Each Contractor and Subcontractor requiring cutting and patching in the execution of his work shall leave all chases, holes, or openings straight, true and of proper size as may be necessary for the proper installation of his own or other Contractor's or Subcontractor's work, consulting with the superintendent and Contractors or Subcontractors concerned parties regarding locations and size.

B. All work shall be done with proper tools and by careful workmen of the particular trade to which such work belongs, and shall be done without extra charge to the Owner. Each Contractor or Subcontractor will be required to

build into his own work, as directed, any and all items furnished by others. Cutting and repairing of new work in place, made necessary for negligence of another Contractor or Subcontractor or anyone employed by him, shall be paid for by the party who is at fault but each Contractor or Subcontractor shall cooperate with all other contractors or subcontractors so that all necessary preparations are made in each branch of the work, as required for all other branches, so far as possible.

C. The work of each Specifications Section includes all cutting, patching and digging for work in that trade section, unless otherwise specified, as required for proper accommodations of work of other trades. Execute such work with competent workmen skilled in trade required for restoration. Each Subcontractor shall arrange and pay for cutting and patching required for installation of his work.

D. Each Contractor shall provide sleeves for service lines covered in his Contract.

1.11 PRECEDENCE OF CONTRACT DOCUMENTS AND NECESSARY WORK

A. The drawings accompanying these specifications attempt to show all work required to complete the project in accordance with the intent and purposes of these specifications. Contractor shall verify all conditions at the building and at the site that affect his work related to the project. The Contractor shall notify the Architect of any discrepancies prior to initiating the work.

B. Figured dimensions are in all cases to be adhered to though they may differ from scale measurements. In the absence of figured dimensions or in the case of doubt as to proper measurements, or in the case of any discrepancies between dimensions and drawings, the Architect is to be consulted. All dimensions and conditions shall be verified at the site by the Contractor, who is solely responsible for resolution of dimensional discrepancies without additional cost to the contract.

C. Detailed drawings take precedence over those of smaller scale. Specifications take precedence over drawings.

D. Work specified and not shown, or drawn and not specified, is to be executed as fully as if described in both ways; any work or material which is not directly or indirectly noted in the specifications and drawings, but is necessary for the proper carrying out of the obvious intention, is to be understood as implied and to be provided for by the Contractor in his Proposal as fully as if specifically described or delineated. Any Discrepancy between drawings, or between drawings and specifications, must be reported to the Architect for correction and clarification before the work is executed.

E. The Contractor shall ensure that all his employees and subcontractors are furnished a copy of and are fully familiar with both the plans and specifications. A subcontractor's failure to read and coordinate both plans and specifications for his trade shall not relieve the General Contractor of the overall responsibility to ensure compliance with the more stringent of two differing requirements in the contract documents.

1.12 CONTRACTOR'S REPRESENTATIVES & EQUIPMENT

A. Superintendent: The Contractor shall give his personal superintendence to the Work or have a competent Superintendent, a minimum of 21 years old, maintaining the ability to communicate in both English and Spanish, and satisfactory to the Architect/Engineer and to the Owner, on the Work at all times during progress, with authority to act for him. All communications given to the Superintendent will be deemed to have been given to the Contractor. An approved Superintendent will not be removed from the Work by the Contractor without the approval of the Architect/Engineer, unless that Superintendent leaves the employ of the Contractor.

B. The Superintendent shall be present at the project site at all times that any work of this contract is underway. If the Superintendent is to be absent from the project site, the Contractor shall provide written notification to the Architect of a qualified replacement Superintendent at least 48 hours in advance. The replacement Superintendent shall be subject to the approval of the Architect and Owner. The only exception to this shall be when the Contractor, an officer of the company with a majority share of ownership, shall be permitted to act in place of the Superintendent.

C. No work shall be performed and no subcontractors shall be permitted to work at any time when the Superintendent is not present. This requirement applies to completion and correction of cited Punch list items at project closeout, until the time of Final Acceptance.

D. The Superintendent may not perform labor on the project and shall dedicate his full energies to coordination and supervision of the work. The Superintendent shall be equipped with a cellular telephone device at all times.

E. Equipment: The General Contractor shall provide and maintain two (2) telephone lines; one (1) dedicated to facsimile machine; a digital camera; and computer equipment connected to an internet service provider, during the duration of the project. The computer shall provide the capability to relay digital images and e-mail messages to TxDOT offices in Austin.

F. Special Superintendence Requirements:
   1. Contractor shall provide full time Superintendence for all after-hours and weekend work performed for this project.
   2. Contractor shall make the Superintendent available during daytime hours for Owner, A/E testing, observations, inspections, progress meetings, job conferences and other typical construction activities.
   3. Superintendence shall be required to be in attendance for receipt of all on-site deliveries required by this contract.

1.13 ASBESTOS HAZARDS

A. No materials incorporated into this project shall contain asbestos in any form. Refer to Section 01310.

B. The EPA, in its publication entitled "Managing Asbestos in Place" provides a list of materials that can contain asbestos. For informational purposes, that list of products is repeated below:

- Cement Pipes
- Cement Wallboard
- Cement Siding
- Asphalt Floor Tile
- Vinyl Floor Tile
- Vinyl Sheet Flooring
- Flooring Backing
- Construction Mastics (floor tile, carpet, ceiling tile) etc.)
- Acoustical Plaster
- Decorative Plaster
- Textured Paints / Coatings
- Ceiling Tiles and Lay-in Panels
- Spray-Applied Insulation
- Blown-in Insulation
- Fireproofing Materials
- Taping Compounds (thermal)
- Packing Materials (for wall/floor penetrations)
- High Temperature Gaskets
- Laboratory Hoods / Table Tops
- Laboratory Gloves
- Fire Blankets
- Fire Curtains
- Elevator Equipment Panels
- Elevator Brake Shoes
- HVAC Duct Insulation
- Boiler Insulation
- Breeching Insulation
- Ductwork Flexible Fabric Connections
- Cooling Towers
- Pipe Insulation (corrugated air-cell, block etc.)
- Heating and Electrical Ducts
- Electrical Panel Partitions
- Electrical Cloth
- Electrical Wiring Insulation
- Chalkboards
- Roofing Shingles
- Roofing Felt
- Base Flashing
- Thermal Paper Products
- Fire Doors
- Caulking / Putties
- Adhesives
- Wallboard
- Joint Compounds
- Vinyl Wall Coverings
- Spackling Compounds

1.14 ENVIRONMENTAL CONDITIONS

A. Construction Site Procedures: Contractor shall abide by the following procedures as is applicable to the specific project conditions:

1. Equipment Cleaning: Equipment shall be cleaned in a manner that does not create any discharge of cleaning agents, paints, oil or other pollutant to a storm sewer or waterway. Soaps and detergents shall not be discharged to the ground or off-site. When rinsing painting equipment outside, contain rinse water in a bucket or other container. Water based or latex paint rinse water may be discharged to the sanitary sewer. Oil-based paint wastes, including solvents and thinners, should not be disposed of in the sanitary sewer. They must be collected and disposed of through the Contractor's disposal company. Cement handling equipment should be not be rinsed on site.
2. Waste Disposal: Any trash or debris must be contained on-site and disposed of in a recycling bin or waste receptacle to prevent wind or rain from carrying it off-site into a storm drain or waterway. Petroleum wastes, such as waste oil and used oil filters, should be containerized for recycling or disposal by the Contractor. Non-hazardous solid wastes, such as general construction debris can be recycled or disposed of in the trash container. Never dispose of liquid wastes of any kind in dumpsters.
3. Sediment: Proper erosion and sedimentation controls must be in place to prevent sediment or silt run-off. Sediment (including cement) should never be rinsed off at the site; instead it should be cleaned up in a manner that does not allow it to reach a storm drain or waterway. Equipment tires may be rinsed before leaving the site to avoid tracking sediment into the roadway or off the site.
4. Site De-watering, Tank and Pipe Testing Discharges from de-watering, hydrostatic tank testing or pipe pressure testing must be free from sediment, chemicals, and any other pollutants. Some discharges may require governmental permits, to be paid for by the Contractor.
5. Petroleum: Spills of hydraulic fluid, oil and other petroleum products shall always be immediately cleaned up to prevent discharge of these fluids with storm water run-off.

B. Spill Disposal

1. The Contractor shall comply with all applicable provisions of local, state, and federal laws regarding the discharge of wastes into sewers and waterways. Special caution shall be exercised to prevent the discharge of wastes which contain oil, mud, cement, lime, or other materials which would degrade the water quality of the receiving watercourse. The Contractor shall construct and maintain oil interceptors, settling basins, or other effective pollution countermeasures.
2. Contaminated Material Disposal: Proper disposal of waste materials depends partly on the type of contaminant. Hazardous wastes (such as flammable petroleum products and solvents, thinners) and materials contaminated with hazardous wastes, are considered regulated wastes, and should be containerized for transport and disposal by a permitted company. Disposal also depends on the amount of contaminant.

C. Contractor Requirements and Responsibilities

1. Contractors are responsible for cleaning up and properly disposing of all spilled pollutants that are brought to the site, including oil, paint, fuels, antifreeze, solvents, etc. Keep accurate records (such as receipts, copies of analytical results, etc.) indicating proper disposal of spilled materials. Furthermore, Contractor is responsible for ensuring that all discharges from the site are in compliance with all applicable regulations.
2. In general no substance should be dumped or leaked onto the ground or allowed to run-off of a construction site that might cause pollution. Be aware that you are responsible for pollutant contaminated run-off and proper disposal of all your waste materials generated as a result of your activities.

1.15 WARRANTY

A. All work performed (including equipment and materials furnished) under this specification shall be 100% warranted for a minimum period of one (1) year from the date of Final Acceptance thereof against defective materials, design, unauthorized substitution, and improper installation. Upon receipt of notice of failure of any portion of the guaranteed systems and/or facilities during the warranty period, the affected portion or facilities shall be replaced or reworked promptly by and at the expense of the Contractor. Further, the Contractor shall properly obtain, execute, and forward any and all Manufacturer's warranties on equipment, materials, etc., furnished under the contract.

B. Comply with all Sections requiring more extended warranties.

PART 2 – NOT USED

END OF SECTION

SECTION 01004
SPECIFICATION OUTLINE

PART 1 - GENERAL

1.1 SUMMARY

A. The purpose of this section is to describe the organization and format to which the Specification has been prepared. This section is intended as an aid to the comprehension of the specification.

1.2 SPECIFICATION FORMAT

A. The Specification has been prepared in accordance with Construction Specifications Institute (CSI) Format.

B. The CSI format is subdivided into 16 major divisions. Divisions form the framework of this Specification and contain the technical requirements for the category of work within each division. Divisions that are not applicable to this specification are not used.

C. Sections within each division describe the specific requirements for different units of work based on trade or type of work. Sections within divisions are arranged in numerical order; however, section numbers may be assigned differently in separate divisions. Page numbering is subordinate to section numbering.

D. Sections are sub-divided into three distinct groupings of related information as follows:
1. Part 1 - GENERAL: Defines the administrative and procedural requirements unique to the section.
2. Part 2 - PRODUCTS: Details the quality and features of items required for the project.
3. Part 3 - EXECUTION: Details the incorporation of the products into the project.

Most sections contain all three sub-divisions; however, they are included only where needed. Paragraph designations are subordinate to sub-divisions.

E. Many sections do not stand alone and are related to other portions of the Subcontract documents. Some sections are specific extensions of, or are governed by the general requirements of Division 1. Requirements of the Subcontract Documents shall apply as a whole, regardless of any overlapping of various portions of the specification.

F. This specification has been written in the imperative mood and, in some cases, in a streamlined form. The imperative language is directed to the Contractor, unless specifically noted otherwise.

1.3 CLARIFICATIONS

A. Most sections begin with a paragraph in Part 1 entitled "Summary" or "Scope of Work". These paragraphs provide a brief description of the work specified in that Section. These descriptions are not intended to be all-inclusive, but provide a brief clarification of the particular subject matter in the specification.

B. Some technical sections contain a paragraph entitled "Related Sections" or "Related Work Specified Elsewhere". This paragraph lists some of the related work specified in

other sections of the Subcontract Documents. These listings are not intended to be all-inclusive. They are presented as a means of aiding the Subcontractor in locating other specification sections containing work that has a close relationship with the work specified in that section. The requirements of the Subcontract Documents, including all specifications, shall apply as a whole.

C. Reference standards are incorporated into the specifications by reference number, title or other designations. The provisions of these standards become a part of the specification as though included in their entirety. When there is a conflict or discrepancy between a reference standard and the specification or with another reference standard, the more stringent requirements shall apply.

D. In the event of a Discrepancy between a drawing and the specification, the specification shall govern.

E. No typographical or other error on drawings shall relieve the Sub-Contractor from his responsibility to perform the intent of this Subcontract.

PART 2 – PRODUCTS (Not Used)

PART 3 – EXECUTION (Not Used)

END OF SECTION

SECTION 01200
PRICE AND PAYMENT PROCEDURES

PART 1 - GENERAL

1.1 SECTION INCLUDES

A. Schedule of values

B. Applications for payment

C. Change procedures

1.2 SCHEDULE OF VALUES

A. Submit printed schedule:
   1. Contractor's standard form or electronic media printout will be considered.

B. Coordination: Coordinate preparation of the Schedule of Values with preparation of Contractor's Construction Schedule.
   1. Correlate line items in the Schedule of Values with other required administrative forms and schedules, including the following:
      a. Application for Payment forms with Continuation Sheets
      b. Submittals Schedule
      c. Contractor's Construction Schedule
   2. Submit the Schedule of Values to the Architect in duplicate within 15 days after date of Owner-Contractor Agreement and the agreed upon finalized schedule of values no later than seven days before the date scheduled for submittal of initial Applications for Payment.

C. Format and Content: Use the Project Manual table of contents as a guide to establish line items for the Schedule of Values. Provide at least one line item for each Specification Section. Identify separately site mobilization, bonds and insurance, and a breakdown of the General Contractors general conditions.
   1. Identification: Include the following Project identification on the Schedule of Values:
      a. Project name and location
      b. Name of Architect
      c. TxDOT project number
      d. Contractor's name and address
      e. Date of submittal
   2. Arrange the Schedule of Values in tabular form with separate columns to indicate the following for each item listed:
      a. Related Specification Section or Division
      b. Description of the Work
      c. Change Orders (numbers) that affect value
      d. Dollar value

1) Percentage of the Contract Sum to nearest one-hundredth percent, adjusted to total 100 percent

3. Provide a breakdown of the Contract Sum in enough detail to facilitate continued evaluation of Applications for Payment and progress reports. Coordinate with the Project Manual table of contents. Provide several line items for principal subcontract amounts, where appropriate.
4. Round amounts to nearest whole dollar; total shall equal the Contract Sum.
5. Provide a separate line item in the Schedule of Values for each part of the Work where Applications for Payment may include materials or equipment purchased or fabricated and stored, but not yet installed.
   a. Differentiate between items stored on-site and items stored off-site. If specified, include evidence of insurance or bonded warehousing.
6. Provide separate line items in the Schedule of Values for initial cost of materials, for each subsequent stage of completion, and for total installed value of that part of the Work.
7. Provide separate line items in the Schedule of Values for each Allowance.
8. Each item in the Schedule of Values and Applications for Payment shall be complete. Include total cost and proportionate share of general overhead and profit for each item.
   a. Temporary facilities and other major cost items that are not direct cost of actual work-in-place may be shown either as separate line items in the Schedule of Values or distributed as general overhead expense, at Contractor's option.
9. Schedule Updating: Update and resubmit the Schedule of Values before the next Applications for Payment when Change Orders or Construction Change Directives result in a change in the Contract Sum.

1.3 APPLICATIONS FOR PAYMENT

A. Submit two copies of each application to Architect for review, 4 days prior to Payment Application Time.

B. Each Application for Payment shall be consistent with previous applications and payments as certified by Architect, TxDOT Project Manager, TxDOT District Representative and paid for by Owner.
   1. Initial Application for Payment, Application for Payment at time of Substantial Completion, and final Application for Payment involve additional requirements.

C. Payment Application Times: The date for each progress payment is indicated in the Agreement between Owner and Contractor. The period of construction Work covered by each Application for Payment is the period indicated in the Agreement.

D. Payment Application Forms: Use forms provided by Owner for Applications for Payment. Use TxDOT format.

E. Application Preparation: Complete every entry on form. Notarize and execute by a person authorized to sign legal documents on behalf of Contractor. Architect and TxDOT Project Manager will return incomplete applications without action.

1. Entries shall match data on the Schedule of Values and Contractor's Construction Schedule. Use updated schedules if revisions were made.
2. Include amounts of Change Orders and Construction Change Directives issued before last day of construction period covered by application.

F. Transmittal: Submit 5 signed and notarized original copies of each Application for Payment to Architect by a method ensuring receipt within 24 hours. One copy shall include waivers of lien and similar attachments if required.
1. Transmit each copy with a transmittal form listing attachments and recording appropriate information about application.

G. Waivers of Mechanic's Lien; with each Application for Payment, submit waivers of mechanic liens for subcontractors, sub-subcontractors, and suppliers for construction period covered by the previous application.
1. Submit partial waivers on each item.
2. When an application shows completion on an item, submit final or full waivers.
3. Owner reserves the right to designate which entities involved in the Work must submit waivers.
4. Submit final Application for Payment with or preceded by final waivers form every entity involved.
5. Waiver Forms: Submit waivers on lien on forms in a manner acceptable to the Owner.

H. Initial Application for Payment: Administrative actions and submittals that must precede or coincide with submittal of first Application for Payment include the following:
1. List of subcontractors
2. Schedule of Values
3. Contractor's Construction Schedule (preliminary if not final)
4. Products list
5. Schedule of unit prices
6. Submittals Schedule (preliminary if not final)
7. List of Contractor's staff assignments
8. List of Contractor's principal consultants
9. Copies of authorizations and licenses from authorities having jurisdiction for performance of the Work
10. Initial progress report
11. Report of preconstruction conference
12. Certificates of insurance and insurance policies
13. Performance and payment bonds
14. Data needed to acquire Owner's insurance

I. Application for Payment at Substantial Completion: After issuing the Certificate of Substantial Completion, submit an Application for Payment showing 100 percent completion for portion of the Work claimed as substantially complete.
1. Include documentation supporting claim that the Work is substantially complete and a statement showing an accounting of changes to the Contract Sum.
2. This application shall reflect Certificates of Partial Substantial Completion issued previously for Owner occupancy of designated portions of the Work.

J. Final Payment Application: Submit final Application for Payment with releases and supporting documentation not previously submitted and accepted, including, but not limited, to the following:
   1. Evidence of completion of Project closeout requirements
   2. Insurance certificates for products and completed operations where required and proof that fees and similar obligations were paid
   3. Updated final statement, accounting for final changes to the Contract Sum
   4. AIA Document G706, "Contractor's Affidavit of Payment of Debts and Claims"
   5. AIA Document G706A, "Contractor's Affidavit of Release of Liens"
   6. AIA Document G707, "Consent of Surety to Final Payment"
   7. Evidence that claims have been settled
   8. Final meter readings for utilities, a measured record of stored fuel, and similar data as of date of Substantial Completion or when Owner took possession of and assumed responsibility for corresponding elements of the Work
   9. Final, liquidated damages settlement statement

K. Submit updated two construction schedules with each Application for Payment.

L. Substantiating Data: When Architect/Engineer requires substantiating information, submit data justifying dollar amounts in question. Include the following with Application for Payment:
   1. Current construction photographs
   2. Construction progress schedules, revised and current

1.4 CHANGE PROCEDURES

A. Submittals: Submit name of individual authorized to receive change documents, and be responsible for informing others in Contractor's employ or Subcontractors of changes to the Work.

B. The Architect/Engineer will advise of minor changes in the Work not involving adjustment to Contract Sum/Price or Contract Time by issuing supplemental instructions.

C. Owner-Initiated Proposal Requests: Architect will issue a detailed description of proposed changes in the Work that may require adjustment to the Contract Sum or the Contract Time. If necessary, the description will include supplemental or revised Drawings and Specifications.
   1. Proposal Requests issued by Architect are for information only. Do not consider them instructions either to stop work in progress or to execute the proposed change.
   2. Within 10 days after receipt of Proposal Request, submit a quotation estimating cost adjustments to the Contract Sum and the Contract Time necessary to execute the change.
      a. Include a list of quantities of products required or eliminated and unit costs, with total amount of purchases and credits to be made. If requested, furnish survey data to substantiate quantities.
      b. Indicate applicable delivery charges, equipment rental, and amounts of trade discounts.
      c. Include costs of labor and supervision directly attributable to the change.

d. Include an updated Contractor's Construction Schedule that indicates the effect of the change, including, but not limited to, changes in activity duration, start and finish times, and activity relationship. Use available total float before requesting an extension of the Contract Time.

D. Contractor-Initiated Proposals: If latent or unforeseen conditions require modifications to the Contract, Contractor may propose changes by submitting a request for a change to Architect.
1. Include a statement outlining reasons for the change and the effect of the change on the Work. Provide a complete description of the proposed change. Indicate the effect of the proposed change on the Contract Sum and the Contract Time.
2. Include a list of quantities of products required or eliminated and unit costs, with total amount of purchases and credits to be made. If requested, furnish survey data to substantiate quantities.
3. Indicate applicable delivery charges, equipment rental, and amounts of trade discounts.
4. Include costs of labor and supervision directly attributable to the change.
5. Include an updated Contractor's Construction Schedule that indicates the effect of the change, including, but not limited to, changes in activity duration, start and finish times, and activity relationship. Use available total float before requesting an extension of the Contract Time.

E. Proposal Request Form: Use AIA Document G709 for Proposal Requests.
1. Document each quotation for change in cost or time with sufficient data to allow evaluation of quotation.

1.5 CHANGE ORDER PROCEDURES

A. On Owner's approval of a Proposal Request, Architect will issue a Change Order for signatures of Owner and Contractor on Owners appropriate form.
1. Execution of Change Orders: Architect/Engineer will issue Change Orders for signatures of parties as provided in Conditions of the Contract.

B. Correlation Of Contractor Submittals:
1. Promptly revise Schedule of Values and Application for Payment forms to record each authorized Change Order as separate line item and adjust Contract Sum/Price.
2. Promptly revise progress schedules to reflect change in Contract Time, revise sub-schedules to adjust times for other items of work affected by the change, and resubmit.
3. Promptly enter changes in Project Record Documents.

1.6 CONSTRUCTION CHANGE DIRECTIVE

A. Construction Change Directive: Architect may issue a Construction Change Directive. Construction Change Directive instructs Contractor to proceed with a change in the Work, for subsequent inclusion in a Change Order.

1. Construction Change Directive contains a complete description of change in the Work. It also designates method to be followed to determine change in the Contract Sum or the Contract Time.

B. Documentation: Maintain detailed records on a time and material basis of work required by the Construction Change Directive.
   1. After completion of change, submit an itemized account and supporting data necessary to substantiate cost and time adjustments to the Contract.

C. The Architect/Engineer will advise of minor changes in the Work not involving adjustment to Contract Sum/Price or Contract Time by issuing supplemental instructions.

PART 2 - PRODUCTS (Not Used)

PART 3 - EXECUTION (Not Used)

END OF SECTION

SECTION 01300
ADMINISTRATIVE REQUIREMENTS

PART 1 - GENERAL

1.1 RELATED SECTIONS

A. 01321 Construction Progress Documents

1.2 SECTION INCLUDES

A. Coordination and project conditions

B. Construction Layout

C. Field engineering

D. Preconstruction meeting

E. Monthly Progress meetings

F. Pre-installation meetings

G. Coordination meetings

1.3 COORDINATION AND PROJECT CONDITIONS

A. Coordinate scheduling, submittals, and Work of various sections of Project Manual to ensure efficient and orderly sequence of installation of interdependent construction elements, with provisions for accommodating items installed later.

B. Administrative Procedures: Coordinate scheduling and timing of required administrative procedures with other construction activities and activities of other contractors to avoid conflicts and to ensure orderly progress of the Work. Such administrative activities include, but are not limited to, the following:

1. Provide project superintendent and other supervisory personnel required for proper performance of the work.
2. Submit list of subcontractors names, phone numbers and trade work.
3. Participate in a pre-construction meeting at a time and place determined by the Owner for the purpose of identifying responsibilities of the Owner’s and Architect’s personnel and explanation of administrative procedures.
4. Schedule and conduct monthly meetings, distribute meeting Minutes.
5. Schedule and conduct other meetings as necessary, distribute meeting Minutes.
6. Owner to schedule and conduct other meetings as necessary, the Owner will distribute meeting Minutes.
7. Preparation of Contractor's Construction Schedule.
8. Preparation of the Schedule of Values.
9. Installation and removal of temporary facilities and controls.

10. Preparation of the Submittal Review Schedule.
11. Delivery and processing of submittals.
12. Progress meetings.
13. Preinstallation conferences.
14. Project closeout activities.
15. Startup and adjustment of systems.
16. Project closeout activities.
17. Submit bar chart progress schedule, updated monthly.
18. Prepare submittal schedule coordinated with progress schedule.
19. Submit schedule of values, divided so as to facilitate payments to subcontractors, on forms acceptable to the Owner. Schedule, when approved, will be used as the basis for the Contractor's Application for payment.
20. Submit schedule of required tests.
21. Perform all field engineering, layout, and surveying required for layout of project.
22. Submit and post a list of emergency telephone numbers and addresses for individuals to be contacted in case of emergency.
23. Record drawings and specifications to be maintained and annotated by contractor as work progresses to record actual construction, and be turned over to the Architect at substantial completion. See Section 01700 for detailed requirements.
24. Submit payment request procedures.
25. Perform quality control during installation.
26. Clean and protect the work.

C. Conservation: Coordinate construction activities to ensure that operations are carried out with consideration given to conservation of energy, water, and materials.

D. Verify utility requirements and characteristics of operating equipment are compatible with building utilities. Coordinate work of various sections having interdependent responsibilities for installing, connecting to, and placing in service, operating equipment.

E. Coordinate space requirements, supports, and installation of mechanical and electrical Work indicated diagrammatically on Drawings. Follow routing shown for pipes, ducts, and conduit, as closely as practicable; place runs parallel with lines of building. Utilize spaces efficiently to maximize accessibility for other installations, for maintenance, and for repairs.

F. In finished areas except as otherwise indicated, conceal pipes, ducts, and wiring within construction. Coordinate locations of fixtures and outlets with finish elements.

G. Coordinate completion and clean-up of Work of separate sections in preparation for Substantial Completion and for portions of Work designated for Owner's partial occupancy.

H. After Owner occupies the premises any access to complete remaining Work or correct defective Work must be coordinated with the Owner's representative in order to minimize disruption of Owner's activities.

1.4 CONSTRUCTION LAYOUT

A. The General Contractor shall include in his bid the cost for providing all construction staking by a Registered Public Surveyor (Surveyor) licensed by Texas Board of Professional Land Surveyors who can demonstrate experience and competence to perform the work described. The grades, spot elevations, dimensions radii, flow line elevations, existing bench marks, excavation and site grading will be indicated on the plans. In the event that discrepancies are noted in the plans by the Contractor and/or the Surveyor, the Architect and/or Engineer of Record shall be notified and the discrepancies shall be resolved prior to proceeding with the Work. The Surveyor shall supervise the layout work and establish at least three (3) separate permanent bench marks, to which easy access may be had during the progress of the work, to determine and verify lines and grades.

B. Under the supervision of the Surveyor, the layout of the work shall be made from the surveyor-established base lines, utility alignments, curb faces, key trees, bench marks and all other control lines as indicated on the plans; and the Contractor shall be responsible for all measurements in connection therewith as specified and as indicated on the plans.

C. Contractor shall be responsible for having the Surveyor verify that elevations of form work. The Surveyor shall return a second time to verify site grading, sidewalk elevations, rough grading next to buildings, concrete curb elevations, base material elevations prior to paving. All surveying work shall comply with the elevations, lines and grades shown on the plans and provide a written report and large size (22” x 34”) drawings indicating findings to the Architect and/or Engineer of Record for consideration and response prior to placing concrete, placing asphalt or install landscaping. Contractor shall not proceed further without Surveyor’s Report / Drawings and the contractor shall be responsible for making the required corrections prior to continuing the Work. No extra charge or compensations will be allowed due to differences between actual dimensions and the measurements indicated on the drawings.

D. Employ Land Surveyor registered and acceptable to the Owner.

E. Locate and protect survey control and reference points. Promptly notify Architect/Engineer of discrepancies discovered.

F. Control datum for survey is that established by Owner provided survey.

G. Verify set-backs and easements; confirm drawing dimensions and elevations.

H. Provide field engineering services. Establish elevations, lines, and levels, utilizing recognized engineering survey practices.

I. Submit copy of site drawing signed by Land Surveyor certifying elevations and locations of the Work are in conformance with Contract Documents.

J. Maintain complete and accurate log of control and survey work as Work progresses.

K. Protect survey control points prior to starting site work; preserve permanent reference points during construction.

L. Promptly report to Architect/Engineer loss or destruction of reference point or relocation required because of changes in grades or other reasons.

M. Replace dislocated survey control points based on original survey control. Make no changes without prior written notice to Architect/Engineer.

1.5 PRECONSTRUCTION MEETING

A. The Owner's Representative will schedule a pre-construction conference and organizational meeting at the Project Site or other convenient location after execution of the Agreement and prior to commencement of construction activities. The Owner's Representative will conduct the meeting to review responsibilities and personnel assignments.

B. Attendees shall include: The Owner, Architect/Engineer and their consultants, the Contractor and its superintendent, major subcontractors, manufacturers, suppliers and other concerned parties shall each be represented at the conference by persons familiar with and authorized to conclude matters relating to the Work.

C. The Agenda shall: Discuss items of significance that could affect progress including such topics as:

1. Tentative construction schedule
2. Critical Work sequencing
3. Designation of responsible personnel
4. List of Subcontractors, trade work, names and phone numbers
5. Procedures for processing field decisions and Change Orders
6. Procedures for processing Applications for Payment
7. Distribution of Contract Documents
8. Submittal of Shop Drawings, Product Data and Samples
9. Preparation of record documents
10. Use of the premises
11. Office, Work and storage areas
12. Equipment deliveries and priorities
13. Safety procedures
14. First Aid
15. Security
16. Housekeeping
17. Working hours

D. The Owner's Representative will record Minutes and distribute copies within five days after meeting to participants, with copies to contractor and those affected by decisions made.

1. General Contractor will distribute Minutes to others.

1.6 PROGRESS MEETINGS

A. Schedule and administer meetings throughout progress of the Work at maximum bi-weekly intervals.
   1. Coordinate dates of meetings with Architect and TxDOT Inspector.
   2. Prepare Contractor's Application for Payment (CAP) on TxDOT form. Architect shall provide forms required for payment submittal.

B. Make arrangements for meetings, prepare agenda with copies for participants, preside at meetings.

C. Attendance Required: Job superintendent, major subcontractors and suppliers, Owner, Architect/Engineer, as appropriate to agenda topics for each meeting.

D. Agenda:
   1. Review of Minutes of previous meetings
   2. Review of Work progress
   3. Field observations, problems, and decisions
   4. Identification of problems impeding planned progress
   5. Review of submittals schedule and status of submittals
   6. Review of off-site fabrication and delivery schedules
   7. Maintenance of progress schedule
   8. Corrective measures to regain projected schedules
   9. Planned progress during succeeding work period
   10. Coordination of projected progress
   11. Maintenance of quality and work standards
   12. Effect of proposed changes on progress schedule and coordination
   13. Other business relating to Work

E. Record Minutes and distribute copies within three days after meeting to participants, with copies to Architect/Engineer, Owner, and those affected by decisions made.

1.7 PRE-INSTALLATION MEETINGS

A. When required in individual specification sections, convene pre-installation meetings at Project site prior to commencing work of specific section.

B. Require attendance of parties directly affecting, or affected by, Work of specific section.

C. Notify Architect/Engineer and Owner 14 days in advance of meeting date.

D. Prepare agenda and preside at meeting:
   1. Review conditions of installation, preparation and installation procedures.
   2. Review coordination with related work.
      a. Contract documents
      b. Options
      c. Related Change Orders
      d. Purchases

e. Deliveries
f. Shop Drawings, Product Data and Quality Control Samples
g. Possible Conflicts
h. Compatibility Problems
i. Time Schedules
j. Weather Limitations
k. Manufacturer's Recommendations
l. Compatibility of Materials
m. Acceptability of Substrates
n. Temporary Facilities
o. Space and Access Limitations
p. Governing Regulations
q. Safety
r. Inspection and Testing Requirements
s. Recording Requirements
t. Protection

E. Record Minutes and distribute copies within three days after meeting to participants, with copies to Architect/Engineer, Owner, and those affected by decisions made.
1. Do not proceed if the conference cannot be successfully concluded.
2. Initiate whatever actions are necessary to resolve impediments to performance of Work and reconvene the conference at the earliest feasible date.

1.8 COORDINATION MEETINGS

A. Conduct project coordination meetings at regularly scheduled times convenient for all parties involved. Project Coordination meetings are in addition to specific meetings held for other purposes, such as regular progress meetings and specific pre-installation conferences.

B. Request representation at each meeting by every party currently involved in coordination or planning for the construction activities involved.

C. Record meeting decisions or action and distribute copies to everyone in attendance and to others affected by those decisions or actions resulting from each meeting.

PART 2 - PRODUCTS (Not Used)

PART 3 - EXECUTION (Not Used)

END OF SECTION

SECTION 01320
ALLOWANCES

PART 1 - GENERAL

1.1 SECTION INCLUDES

A. This section includes administrative and procedural requirements governing allowances.

Item 1. Allowances **<u>are not</u>** unit prices. Allowances are cost items that shall be added to the General Contractor's final project costs and included in the Total Lump Sum Bid amount for this project. As certain unforeseen conditions occur during construction, the owner has the right to use or not use these allowances. Each allowance item shall appear on the Schedule of Value and the general contractor may be directed by the owner to draw on certain items to complete unforeseen tasks during construction.

Item 2. The allowance amount does not belong to the general contractor and at the end of the project the allowance balance shall be deducted from the contract amount by issuing a deduct change order.

B. Types of allowances include the following:

Item 1. Lump Sum allowances based on section 3.3 Schedule of Allowances.

1.2 SUBMITTALS

A. Provide submittals of each item from the Allowances when directed by the owner.

B. Provide submittal before commencing work on allowances. Owner will review the submittals prior to accepting the work for an allowance.

PART 2 - PRODUCTS (Not Used)

PART 3 - EXECUTION

3.1 EXAMINATION

A. Examine products covered by an allowance promptly on delivery for damage or defects. Return damaged or defective products to Manufacturer for replacement.

3.2 PREPARATION

A. Coordinate materials and their installation for each allowance with related materials and installations to ensure that each allowance item is completely integrated and interfaced with related work.

3.3 SCHEDULE OF ALLOWANCES: The following allowance items are in addition to any of the items required, implied, or indicated by the final plans and specifications to be provided. Installation of an allowance item shall be in accordance with the plans and specifications. **The cost for the allowance items is to be included in the Total Lump Sum Bid amount for this project**. The use and location of an allowance item will be as directed by the Owner. The price for an allowance item will be used to determine both "add" and "deduct" pricing during the Contract Time. Owner will be credited for unused allowance items at the completion of the project using the price per item as the basis of credit.

Item 1. The General Contractor will provide an allowance of **2** installations of free-standing (floor to ceiling), "dedicated circuit" power poles complete and operable. Each installation shall include but not be limited to: 20 amp branch circuit breaker, run of up to 150 feet of conduit, ceiling J-Box, run of up to 20 feet of flex conduit, and (3) #10 AWG copper conductors. Wire AWG sizes specified are minimum and shall be increased in size in accordance with NEC requirements when applicable at no additional cost. The power poles shall be Wire mold Model No. 25DTP-4 or approved equal. This allowance is for additional work only.

Item 2. The General Contractor will provide an allowance of **2** installations of electrical circuits and connections of modular furniture power poles and/or base power feeds. Each installation shall include but not be limited to: 4 - 20 amp branch circuit breakers, up to 150 feet of conduit, up to 4 ceiling / wall J-Box(s), up to 20 feet of flex conduit per J-Box, and (6) #10 and (2) # 12 AWG copper conductors color coded as specified. For base power feed installation in wall raceway and wall box shall be included. Wire AWG sizes specified are minimum and shall be increased in size in accordance with the requirements of the Note following the table titled "Texas Department of Transportation Wire Standard". Surface mounted raceway may be used in lieu of in wall raceway and wall box for base power feed only in locations approved by the Owner at no additional cost. This allowance is for additional work only.

Item 3. The General Contractor will provide an allowance of **2** installations of modular furniture voice/data outlets. Installation of a voice/data outlet shall include all items specified, ancillary to, and necessary for complete and operable voice and data network circuits. Each installation shall include but not be limited to up to 325 feet of each cable required per outlet installation. This allowance is for additional work only.

Item 4. The General Contractor will provide an allowance of **2** installations of wall mounted voice/data outlets. Installation of a voice/data outlet shall include all items specified, ancillary to, and necessary for complete and operable voice and data network circuits. Each installation shall include but not be limited to up to 325 feet of each

cable required per outlet installation. In wall raceway installation shall include back box, ¾" conduit, pull cord, insulated bushing and any items necessary for a complete raceway installation. This allowance is for additional work only.

Item 5. The General Contractor will provide an allowance of **3** installations of an interior solid core doors hollow metal frames, and complete hardware sets. Installation of an interior solid core door, hollow metal frame, and complete hardware set shall include all items specified, ancillary to, and necessary for a complete, finished, and operable interior door. Installation of an interior solid core door shall include, but not be limited to, solid core door, hollow metal frame, butts, lockset, silencers, door stop, door closer, and finishes. This allowance is for additional work only.

Item 6. The General Contractor will provide an allowance of **$1,500** for door hardware in addition to the hardware specified on section 08710. This allowance is for additional work only.

Item 7. The General Contractor will provide an allowance of **500** Square feet of ceiling height metal stud drywall partition installations, 3 5/8, 25 gauge metal stud at 16" o.c. Installation of a ceiling height metal stud drywall partition shall include all items specified, ancillary to, and necessary for complete installation to include, but not be limited to, taped, floated, textured, painted, base, and ceiling and flooring adjustments. This allowance is for additional work only.

Item 8. The General Contractor will provide an allowance of **3** single pole light switch installations. Installation of single pole light switch shall include all items specified, ancillary to, and necessary for complete installation to include, but not be limited to, single pole switch, box(s), conduit, fittings, wire, connections, and face plate. This allowance is for additional work only.

Item 9. The General Contractor will provide an allowance of **3** single circuit wall receptacle installations. Installation of single circuit wall receptacle shall include all items specified, ancillary to, and necessary for complete installation to include, but not be limited to, receptacle, box(s), conduit, fittings, wire, connections, circuit breaker, and face plate.

Item 10. The General Contractor will provide an allowance of **3** single wall receptacle installations. Installation of single wall receptacle shall include all items specified, ancillary to, and necessary for complete installation to include, but not be limited to, receptacle, box(s), conduit, fittings, wire, connections, face plate, and one circuit breaker per 8 receptacles. This allowance is for additional work only.

Item 11. The General Contractor will provide an allowance of **2** fluorescent 2 x 4 lay in light fixture installations. Installation of fluorescent light fixture shall include all items specified, ancillary to, and necessary for complete installation to include, but not be limited to, fluorescent light fixture, box(s), flex conduit, fittings, wire, and connections. This allowance is for additional work only.

Item 12. The General Contractor will provide an allowance of **3** electrical boxes and 30 l.f. of empty ¾" conduit. This allowance is for additional work only.

Item 13. The General Contractor will provide an allowance of **50** l.f. of security fencing installation. Installation of security fencing shall include all items specified, ancillary to, and necessary for a complete installation. This allowance is for additional work only.

Item 14. The General Contractor will provide an allowance of 3**00** s.f. of Vinyl Composition Tile (VCT) and 40 l.f. of rubber base installation. Installation of VCT and rubber base shall include all items specified, ancillary to, and necessary for a complete installation. This allowance is for additional work only.

Item 15. The General Contractor will provide an allowance of **600** Square Yards of Asphalt Paving and Flexible Base. Installation of Asphalt Pavement and Flexible Base material shall include all items specified, ancillary to, and necessary for a complete installation. This allowance is for additional work only.

Item 16. The General Contractor will provide an allowance for furnishing and installing **60** lineal feet of 12" x 20" insulated fiberglass ducts. This allowance is for additional work only.

Item 17. The General Contractor will provide an allowance for furnishing and installing **100** lineal feet of flex duct. This allowance is for additional work only.

Item 18. The General Contractor will provide an allowance for furnishing and installing **300** cubic feet of structural concrete (3000psi) with 0ne (1) ton of reinforcing steel (#4s rebar). This allowance is for additional work only.

Item 19. The General Contractor will provide an allowance of **$3,000** for plumbing work. This allowance is for additional work only.

Item 20. The General Contractor will provide an allowance of **$4,000** for painting work. This allowance is for additional work only.

Item 21. **$25,000** Landscape Allowance for irrigation system, plants and sod around building.

END OF SECTION

SECTION 01321
CONSTRUCTION PROGRESS DOCUMENTATION

PART 1 - GENERAL

1.1 RELATED DOCUMENTS

A. Drawings and general provisions of the Contract, including General and Supplementary Conditions and other Division 1 Specification Sections, apply to this Section.

1.2 SUMMARY

A. This Section includes administrative and procedural requirements for documenting the progress of construction during performance of the Work, including the following:
   1. Contractor's Construction Schedule
   2. Submittals Schedule
   3. Daily construction reports
   4. Field condition reports
   5. Special reports

B. Related Sections include the following:
   1. Division 1 Section "Payment Procedures" for submitting the Schedule of Values
   2. Division 1 Section "Project Management and Coordination" for submitting and distributing meeting and conference minutes
   3. Division 1 Section "Submittal Procedures" for submitting schedules and reports
   4. Division 1 Section "Quality Requirements" for submitting a schedule of tests and inspections

1.3 SUBMITTALS

A. Submittals Schedule: Submit four copies of schedule and electronic file in MS Office Project. Arrange the following information in a tabular format:
   1. Scheduled date for first submittal
   2. Specification Section number and title
   3. Submittal category (action or informational)
   4. Name of subcontractor
   5. Description of the Work covered
   6. Scheduled date for Architect's final release or approval

B. Contractor's Construction Schedule: Submit four opaque copies of initial schedule, large enough to show entire schedule for entire construction period.

C. CPM Reports: Concurrent with CPM schedule, submit four copies of each of the following computer-generated reports. Format for each activity in reports shall contain activity number, activity description, cost and resource loading, original duration, remaining duration, early start date, early finish date, late start date, late finish date, and total float in calendar days.
   1. Activity Report: List of all activities sorted by activity number and then early start date, or actual start date if known.

2. Logic Report: List of preceding and succeeding activities for all activities, sorted in ascending order by activity number and then early start date, or actual start date if known.
3. Total Float Report: List of all activities sorted in ascending order of total float.
4. Earnings Report: Compilation of Contractor's total earnings from the Notice to Proceed until most recent Application for Payment.

D. Daily Construction Reports: Submit two copies at monthly intervals, when requested.

E. Field Condition Reports: Submit two copies at time of discovery of differing conditions.

F. Special Reports: Submit two copies at time of unusual event.

1.4 COORDINATION

A. Coordinate preparation and processing of schedules and reports with performance of construction activities and with scheduling and reporting of separate contractors.

B. Coordinate Contractor's Construction Schedule with the Schedule of Values, list of subcontracts, Submittals Schedule, progress reports, payment requests, and other required schedules and reports.
1. Secure time commitments for performing critical elements of the Work from parties involved.
2. Coordinate each construction activity in the network with other activities and schedule them in proper sequence.

PART 2 - PRODUCTS

2.1 SUBMITTALS SCHEDULE

A. Preparation: Submit a schedule of submittals, arranged in chronological order by dates required by construction schedule. Include time required for review, resubmittal, ordering, manufacturing, fabrication, and delivery when establishing dates.
1. Coordinate Submittals Schedule with list of subcontracts, the Schedule of Values, and Contractor's Construction Schedule.
2. If a Preliminary Construction Schedule is not required, delete subparagraph below or revise to require initial submittal within 14 days of date established for commencement of the Work.
3. Delete subparagraph below if not allowed.
4. Revise subparagraph below if schedule must be continuously updated to reflect current status and changes in timing for submittals.
5. Final Submittal: Submit concurrently with the first complete submittal of Contractor's Construction Schedule.

2.2 CONTRACTOR'S CONSTRUCTION SCHEDULE, GENERAL

A. Procedures: Comply with procedures contained in AGC's "Construction Planning & Scheduling."

B. Time Frame: Extend schedule from date established for the Notice to Proceed to date of Substantial Completion.
   1. Contract completion date shall not be changed by submission of a schedule that shows an early completion date, unless specifically authorized by Change Order.

C. Activities: Treat each separate area as a separate numbered activity for each principal element of the Work. Comply with the following:
   1. Activity Duration: Define activities so no activity is longer than 20 days, unless specifically allowed by Architect.
   2. Procurement Activities: Include procurement process activities for the following long lead items and major items, requiring a cycle of more than 60 days, as separate activities in schedule. Procurement cycle activities include, but are not limited to, submittals, approvals, purchasing, fabrication, and delivery.
   3. Submittal Review Time: Include review and resubmittal times indicated in Division 1 Section "Submittal Procedures" in schedule. Coordinate submittal review times in Contractor's Construction Schedule with Submittals Schedule.
   4. Startup and Testing Time: Include not less than seven days for startup and testing.
   5. Substantial Completion: Indicate completion in advance of date established for Substantial Completion, and allow time for Architect's and TxDOT Project Manager administrative procedures necessary for certification of Substantial Completion.

D. Constraints: Include constraints and work restrictions indicated in the Contract Documents and as follows in schedule, and show how the sequence of the Work is affected.
   1. Phasing: Arrange list of activities on schedule by phase.
   2. Products Ordered in Advance: Include a separate activity for each product. Include delivery date indicated in Division 1 Section "Summary." Delivery dates indicated stipulate the earliest possible delivery date.
   3. Owner-Furnished Products: Include a separate activity for each product. Include delivery date indicated in Division 1 Section "Summary." Delivery dates indicated stipulate the earliest possible delivery date.
   4. Work Restrictions: Show the effect of the following items on the schedule:
      a. Seasonal variations
      b. Environmental control
   5. Work Stages: Indicate important stages of construction for each major portion of the Work, including, but not limited to, the following:
      a. Submittals
      b. Mockups
      c. Fabrication
      d. Sample testing
      e. Deliveries
      f. Installation
      g. Tests and inspections
      h. Adjusting
      i. Curing
      j. Startup and placement into final use and operation
   6. Area Separations: Identify each major area of construction for each major portion of the Work. Indicate where each construction activity within a major area must be sequenced or integrated with other construction activities to provide for the following:

a. Structural completion
b. Permanent space enclosure
c. Completion of mechanical installation
d. Completion of electrical installation
e. Substantial Completion

E. Milestones: Include milestones indicated in the Contract Documents in schedule, including, but not limited to, the Notice to Proceed, Substantial Completion, and Final Completion.
First paragraph below establishes progress measured in dollar volume of the Work.

F. Cost Correlation: At the head of schedule, provide a cost correlation line, indicating planned and actual costs. On the line, show dollar volume of the Work performed as of dates used for preparation of payment requests.
1. Refer to Division 1 Section "Payment Procedures" for cost reporting and payment procedures.
2. Retain three subparagraphs below for CPM schedule.
3. Contractor shall assign cost to construction activities on the CPM schedule. Costs shall not be assigned to submittal activities unless specified otherwise but may, with Architect's approval, be assigned to fabrication and delivery activities. Costs shall be under required principal subcontracts for testing and commissioning activities, operation and maintenance manuals, punch list activities, Project Record Documents, and demonstration and training (if applicable), in the amount of 5 percent of the Contract Sum.
4. Each activity cost shall reflect an accurate value subject to approval by Architect.
5. Total cost assigned to activities shall equal the total Contract Sum.

G. Contract Modifications: For each proposed contract modification and concurrent with its submission, prepare a time-impact analysis using fragnets to demonstrate the effect of the proposed change on the overall project schedule.

2.3 CONTRACTOR'S CONSTRUCTION SCHEDULE (CPM SCHEDULE)

A. General: Prepare network diagrams using AON (activity-on-node) format.

B. Projects using CPM schedules should begin with a preliminary network diagram of type described below or a preliminary bar-chart schedule.

C. Preliminary Network Diagram: Submit diagram within 14 days of date established for the Notice to Proceed. Outline significant construction activities for the first 60 days of construction. Include skeleton diagram for the remainder of the Work and a cash requirement prediction based on indicated activities.

D. Revise paragraph and subparagraphs below to suit Project.

E. CPM Schedule: Prepare Contractor's Construction Schedule using a computerized, time-scaled CPM network analysis diagram for the Work.
1. Develop network diagram in sufficient time to submit CPM schedule so it can be accepted for use no later than 14 days after date established for the Notice to Proceed.

a. Failure to include any work item required for performance of this Contract shall not excuse Contractor from completing all work within applicable completion dates, regardless of Architect's approval of the schedule.

2. Establish procedures for monitoring and updating CPM schedule and for reporting progress. Coordinate procedures with progress meeting and payment request dates.
3. Use "one workday" as the unit of time. Include list of nonworking days and holidays incorporated into the schedule.

F. CPM Schedule Preparation: Prepare a list of all activities required to complete the Work. Using the preliminary network diagram, prepare a skeleton network to identify probable critical paths.

1. Activities: Indicate the estimated time duration, sequence requirements, and relationship of each activity in relation to other activities. Include estimated time frames for the following activities:
   a. Preparation and processing of submittals
   b. Mobilization and demobilization
   c. Purchase of materials
   d. Delivery
   e. Fabrication
   f. Installation
   g. Testing
2. Critical Path Activities: Identify critical path activities, including those for interim completion dates. Scheduled start and completion dates shall be consistent with Contract milestone dates.
3. Processing: Process data to produce output data on a computer-drawn, time-scaled network. Revise data, reorganize activity sequences, and reproduce as often as necessary to produce the CPM schedule within the limitations of the Contract Time.
4. Format: Mark the critical path. Locate the critical path near center of network; locate paths with most float near the edges.
   a. Subnetworks on separate sheets are permissible for activities clearly off the critical path.

G. Initial Issue of Schedule: Prepare initial network diagram from a list of straight "early start-total float" sort. Identify critical activities. Prepare tabulated reports showing the following:

1. Contractor or subcontractor and the Work or activity
2. Description of activity
3. Principal events of activity
4. Immediate preceding and succeeding activities
5. Early and late start dates
6. Early and late finish dates
7. Activity duration in workdays
8. Total float or slack time
9. Average size of workforce
10. Dollar value of activity (coordinated with the Schedule of Values)

H. Schedule Updating: Concurrent with making revisions to schedule, prepare tabulated reports showing the following:

1. Identification of activities that have changed
2. Changes in early and late start dates
3. Changes in early and late finish dates
4. Changes in activity durations in workdays
5. Changes in the critical path
6. Changes in total float or slack time
7. Changes in the Contract Time

2.4 REPORTS

A. Daily Construction Reports: Prepare a daily construction report recording the following information concerning events at Project site:
   1. List of subcontractors at Project site
   2. Approximate count of personnel at Project site
   3. Material deliveries
   4. High and low temperatures and general weather conditions
   5. Accidents
   6. Meetings and significant decisions
   7. Unusual events (refer to special reports)
   8. Stoppages, delays, shortages, and losses
   9. Emergency procedures
   10. Orders and requests of authorities having jurisdiction
   11. Change Orders received and implemented
   12. Construction Change Directives are used by AIA Document A201
       EJCDC Document 1910-8 uses Work Change Directives
   13. Construction Change Directives received and implemented
   14. Services connected and disconnected
   15. Equipment or system tests and startups
   16. Substantial Completions authorized

B. Field Condition Reports: Immediately on discovery of a difference between field conditions and the Contract Documents, prepare and submit a detailed report. Submit with a request for interpretation on CSI Form 13.2A. Include a detailed description of the differing conditions, together with recommendations for changing the Contract Documents.

2.5 SPECIAL REPORTS

A. General: Submit special reports directly to Owner within one day(s) of an occurrence. Distribute copies of report to parties affected by the occurrence.

B. Retain paragraph below if Owner is unusually sensitive about public relations.

C. Reporting Unusual Events: When an event of an unusual and significant nature occurs at Project site, whether or not related directly to the Work, prepare and submit a special report. List chain of events, persons participating, response by Contractor's personnel, evaluation of results or effects, and similar pertinent information. Advise Owner in advance when these events are known or predictable.

PART 3 - EXECUTION

3.1 CONTRACTOR'S CONSTRUCTION SCHEDULE

A. Contractor's Construction Schedule Updating: At monthly intervals, update schedule to reflect actual construction progress and activities. Issue schedule one week before each regularly scheduled progress meeting.
   1. Revise schedule immediately after each meeting or other activity where revisions have been recognized or made. Issue updated schedule concurrently with the report of each such meeting.
   2. Include a report with updated schedule that indicates every change, including, but not limited to, changes in logic, durations, actual starts and finishes, and activity durations.
   3. As the Work progresses, indicate Actual Completion percentage for each activity.

B. Distribution: Distribute copies of approved schedule to Architect, Owner, separate contractors, testing and inspecting agencies, and other parties identified by Contractor with a need-to-know schedule responsibility.
   1. Post copies in Project meeting rooms and temporary field offices.
   2. When revisions are made, distribute updated schedules to the same parties and post in the same locations. Delete parties from distribution when they have completed their assigned portion of the Work and are no longer involved in performance of construction activities.

C. Distribution: Provide electronic copy to Architect in MS Office Project format.

END OF SECTION

SECTION 01330
SUBMITTAL PROCEDURES

PART 1 - GENERAL

1.1 SECTION INCLUDES

A. Submittal procedures

B. Construction progress schedules

C. Proposed products list

D. Subcontractor List

E. Product data

F. Shop drawings

G. Samples

H. Design data

I. Test reports

J. Certificates

K. Manufacturer's instructions

L. Manufacturer's field reports

M. Erection drawings

N. Construction photographs

O. Project Warranty And Maintenance Manual

1.2 SUBMITTAL PROCEDURES

A. General: Electronic copies of CAD Drawings of the Contract Drawings will not be provided by Architect for Contractor's use in preparing submittals.

B. Coordination: Coordinate preparation and processing of submittals with performance of construction activities.

1. Coordinate each submittal with fabrication, purchasing, testing, delivery, other submittals, and related activities that require sequential activity.

2. Coordinate transmittal of different types of submittals for related parts of the Work so processing will not be delayed because of need to review submittals concurrently for coordination.
    a. Architect reserves the right to withhold action on a submittal requiring coordination with other submittals until related submittals are received.

C. Processing Time: Allow enough time for submittal review, including time for resubmittals, as follows. Time for review shall commence on Architect's receipt of submittal. No extension of the Contract Time will be authorized because of failure to transmit submittals enough in advance of the Work to permit processing, including resubmittals.
1. Initial Review: Allow 21 days for initial review of each submittal. Allow additional time if coordination with subsequent submittals is required. Architect will advise Contractor when a submittal being processed must be delayed for coordination.
2. Intermediate Review: If intermediate submittal is necessary, process it in same manner as initial submittal.
3. Resubmittal Review: Allow 15 days for review of each resubmittal.
4. Concurrent Consultant Review: Where the Contract Documents indicate that submittals may be transmitted simultaneously to Architect and to Architect's consultants, allow 21 days for review of each submittal. Submittal will be returned to Architect before being returned to Contractor.
5. Schedule submissions at least 40 days before reviewed submittals will be needed, in accordance with the above review times noted above (the above allows for one resubmittal review and distribution) and approved submittal schedule.

D. Insert list of submittals below allowing concurrent review or delete and identify submittals in Sections where they are specified. Structural, mechanical, plumbing, and electrical components are examples of the Work that often require simultaneous transmittal to Architect and consultants.

E. Apply Contractor's stamp, signed or initialed certifying that review, approval, verification of products required, field dimensions, adjacent construction Work, and coordination of information is in accordance with requirements of the Work and Contract Documents.
1. Coordinate each submittal with requirements of work of Contract Documents.
2. Contractor’s responsibility for errors and omissions in submittals is not relieved by Architect’s review of submittals.
3. Contractor’s responsibility for deviations in submittals from requirements of Contract Documents is not relieved by Architect’s review of submittals, unless Architect gives written acceptance of specific deviations.
4. Notify Architect, in writing at time of submission, of deviations in submittals from requirements of Contract Documents.

F. Identification: Place a permanent label or title block on each submittal for identification.
1. Indicate name of firm or entity that prepared each submittal on label or title block.
2. Provide a space approximately 6 by 8 inches on label or beside title block to record Contractor's review and approval markings and action taken by Architect.

3. Include the following information on label for processing and recording action taken:
    a. Project name
    b. Date
    c. Name and address of Architect
    d. Name and address of Contractor
    e. Name and address of Subcontractor
    f. Name and address of Supplier
    g. Name of Manufacturer
    h. Submittal number or other unique identifier, including revision identifier.
        1) Submittal number shall use Specification Section number followed by a decimal point and then a sequential number (e.g., 06100.01). Resubmittals shall include an alphabetic suffix after another decimal point (e.g., 06100.01.A).
    i. Number and title of appropriate Specification Section
    j. Drawing number and detail references, as appropriate
    k. Location(s) where product is to be installed, as appropriate
    l. Other necessary identification

G. Deviations: Highlight, encircle, or otherwise specifically identify deviations from the Contract Documents on submittals.

H. Additional Copies: Unless additional copies are required for final submittal, and unless Architect observes noncompliance with provisions in the Contract Documents, initial submittal may serve as final submittal.
1. Submit one copy of submittal to concurrent reviewer in addition to specified number of copies to Architect.
2. Additional copies submitted for maintenance manuals will not be marked with action taken and will be returned.

I. Transmittal: Package each submittal individually and appropriately for transmittal and handling. Transmit each submittal using a transmittal form. Architect will return submittals, without review, received from sources other than Contractor.
1. Transmittal Form: Use form acceptable to the Owner and Architect. Provide locations on form for the following information:
    a. Project name
    b. Date
    c. Destination (To)
    d. Source (from)
    e. Names of Subcontractor, Manufacturer, and Supplier
    f. Category and type of submittal
    g. Submittal purpose and description
    h. Specification Section number and title
    i. Drawing number and detail references
    j. Transmittal number, numbered consecutively
    k. Submittal and transmittal distribution record
    l. Remarks
    m. Signature of Transmitter

2. On an attached separate sheet, prepared on Contractor's letterhead, record relevant information, requests for data, revisions other than those requested by Architect on previous submittals, and deviations from requirements in the Contract Documents, including minor variations and limitations. Include same label information as related submittal.

J. Resubmittals: Make resubmittals in same form and number of copies as initial submittal.
1. When revised for resubmission, identify changes made since previous submission.
2. Mark revised submittals with original number and sequential alphabetic suffix. Note date and content of previous submittal.
3. Note date and content of revision in label or title block and clearly indicate extent of revision.

K. Allow space on submittals for Contractor and Architect/Engineer review stamps.

L. Resubmit submittals until they are marked ‘REVIEWED’.

M. Distribution: Furnish copies of final submittals to Manufacturers, Subcontractors, Suppliers, Fabricators, Installers, authorities having jurisdiction, and others as necessary for performance of construction activities. Show distribution on transmittal forms.
1. Distribute copies of reviewed submittals as appropriate. Instruct parties to promptly report inability to comply with requirements.

N. Use for Construction: Use only final submittals with mark indicating ‘REVIEWED’.
1. Begin no work which requires submittals until return of submittals with Architect’s stamp and initials or signature indicating review.

O. Submittals not requested will not be recognized or processed.

1.3 CONSTRUCTION PROGRESS SCHEDULES

A. Submit preliminary outline Schedules within 15 days after date of Owner-Contractor Agreement for coordination with Owner's requirements. After review, submit detailed schedules within 7 days modified to accommodate revisions recommended by Architect/Engineer and Owner.

B. Related Section 01321 – Construction Progress Documentation: Submit revised Progress Schedules with each Application for Payment.

C. Distribute copies of reviewed schedules to Project site file, Subcontractors, Suppliers, and other concerned parties.

D. Instruct recipients to promptly report, in writing, problems anticipated by projections indicated in schedules.

E. Submit computer generated horizontal bar chart or other approved form with separate line for each section of Work, identifying first work day of each week.

F. Show complete sequence of construction by activity, identifying Work of separate stages and other logically grouped activities. Indicate early and late start, early and late finish, float dates, and duration.

G. Indicate estimated percentage of completion for each item of Work at each submission.

H. Submit separate schedule of submittal dates for shop drawings, product data, and samples, including Owner furnished products and products identified under Allowances, and dates reviewed submittals will be required from Architect/Engineer. Indicate decision dates for selection of finishes.

I. Indicate delivery dates for Owner furnished products and products identified under Allowances.

J. Revisions To Schedules:
   1. Indicate progress of each activity to date of submittal, and projected completion date of each activity.
   2. Identify activities modified since previous submittal, major changes in scope, and other identifiable changes.
   3. Prepare narrative report to define problem areas, anticipated delays, and impact on Schedule. Report corrective action taken, or proposed, and its effect including effect of changes on schedules of separate Contractors.

1.4 PROPOSED PRODUCTS LIST

A. Within 15 days after date of Owner-Contractor Agreement, submit list of major products proposed for use, with name of Manufacturer, trade name, and model number of each product.

B. For products specified only by reference standards, give Manufacturer, trade name, model or catalog designation, and reference standards.

1.5 SUBCONTRACTOR LIST

A. Prepare a written summary identifying individuals or firms proposed for each portion of the Work, including those who are to furnish products or equipment fabricated to a special design. Include the following information in tabular form:
   1. Name, address, and telephone number of entity perform subcontract or supplying products
   2. Number and title of related Specification Sections(s) cover by Subcontractor
   3. Drawing number and detail references, as appropriate, covered by subcontract

B. Submit three copies of Subcontractor list, unless otherwise indicated. Architect will return two copies.
   1. Mark up and retain one returned copy as a Project Record Document.

1.6 PRODUCT DATA

A. General: Prepare and submit Action Submittals required by individual Specification Sections.

B. Product Data: Submit to Architect/Engineer for review for limited purpose of checking for conformance with information given and design concept expressed in Contract Documents.

C. Submit number three Contractor copies, plus two copies Architect/Engineer will retain.

D. Mark each copy to identify applicable products, models, options, and other data. Supplement Manufacturers' standard data to provide information specific to this Project.

E. Indicate product utility and electrical characteristics, utility connection requirements, and location of utility outlets for service for functional equipment and appliances.

F. After review, produce copies and distribute in accordance with SUBMITTAL PROCEDURES article and for record documents described in Section 01700.

1.7 SHOP DRAWINGS

A. Prior to submitting shop drawings, Contractor shall furnish Architect with complete Shop Drawing Submittal Log. No Submittals will be reviewed until a complete Submittal Log has been submitted to Architect.
   1. Contractor shall submit all required shop drawings and product data to the Architect with reasonable promptness and in an orderly sequence so as to cause no delay in the work.
   2. Prepare and submit, with construction schedule, a separate schedule listing dates for submission and lead dates for reviewed shop drawings, product data and samples for each item.
   3. No extension of time shall be allowed because of failure to properly coordinate and sequence submittals.

B. Shop Drawings: Submit to Architect/Engineer for review for limited purpose of checking for conformance with information given and design concept expressed in Contract Documents.

C. Shop Drawings: Prepare Project-specific information, drawn accurately to scale. Do not base Shop Drawings on reproductions of the Contract Documents or standard printed data.
   1. Preparation: Fully illustrate requirements in the Contract Documents. Include the following information, as applicable:
      a. Dimensions
      b. Identification of products
      c. Fabrication and installation drawings
      d. Roughing-in and setting diagrams
      e. Wiring diagrams showing field-installed wiring, including power, signal, and control wiring

f. Shopwork manufacturing instructions
g. Templates and patterns
h. Schedules
i. Design calculations
j. Compliance with specified standards
k. Notation of coordination requirements
l. Notation of dimensions established by field measurement
m. Relationship to adjoining construction clearly indicated
n. Seal and signature of professional engineer if specified
o. Wiring Diagrams: Differentiate between Manufacturer-installed and field-installed wiring

2. Sheet Size: Except for templates, patterns, and similar full-size drawings, submit Shop Drawings on sheets at least 8-1/2 by 11 inches but no larger than 22 by 24 inches.
3. Number of Copies: Submit five opaque copies of each submittal, unless copies are required for operation and maintenance manuals. Architect will retain two copies; remainder will be returned. Mark up and retain one returned copy as a Project Record Drawing

D. Indicate special utility and electrical characteristics, utility connection requirements, and location of utility outlets for service for functional equipment and appliances.

E. All work must ultimately comply with the contract documents unless Architect/Engineer gives specific written acceptance of specific deviations.

F. After review, produce copies and distribute in accordance with SUBMITTAL PROCEDURES article and for record documents described in Section 01700.

1.8 SAMPLES

A. Samples: Submit to Architect/Engineer for review for limited purpose of checking for conformance with information given and design concept expressed in Contract Documents.

B. Samples For Initial Selection as Specified in Product Sections:
1. Submit to Architect/Engineer for aesthetic, color, or finish selection.
2. Submit samples of finishes from full range of Manufacturers' standard colors, textures, and patterns for Architect/Engineer selection.

C. Submit samples to illustrate functional and aesthetic characteristics of Products, with integral parts and attachment devices. Coordinate sample submittals for interfacing work.

D. Include identification on each sample, with full Project information.

E. Submit number of samples specified in individual specification sections; Architect/Engineer will retain two samples.
1. Architect will retain two Sample sets; remainder will be returned. Mark up and retain one returned Sample set as a Project Record Sample.
2. Retain one sample on construction site for field comparison as needed.

F. Samples will not be used for testing purposes unless specifically stated in specification section.

G. After review, produce duplicates and distribute in accordance with SUBMITTAL PROCEDURES article and for record documents purposes described in Section 01700.

1.9 DESIGN DATA

A. Submit for Architect/Engineer's knowledge as contract administrator or for Owner.

B. Submit for information for limited purpose of assessing conformance with information given and design concept expressed in Contract Documents.

1.10 TEST REPORTS

A. Submit for Architect/Engineer's knowledge as contract administrator or for Owner.

B. Submit test reports for information for limited purpose of assessing conformance with information given and design concept expressed in Contract Documents.

1.11 CERTIFICATES

A. When specified in individual specification sections, submit certification by Manufacturer, installation/application Subcontractor, or Contractor to Architect/Engineer, in quantities specified for Product Data.

B. Indicate material or product conforms to or exceeds specified requirements. Submit supporting reference data, affidavits, and certifications as appropriate.

C. Certificates may be recent or previous test results on material or Product, but must be acceptable to Architect/Engineer.

1.12 MANUFACTURER'S INSTRUCTIONS

A. When specified in individual specification sections, submit printed instructions for delivery, storage, assembly, installation, start-up, adjusting, and finishing, to Architect/Engineer for delivery to Owner in quantities specified for Product Data.

B. Indicate special procedures, perimeter conditions requiring special attention, and special environmental criteria required for application or installation.

1.13 MANUFACTURER'S FIELD REPORTS

A. Submit reports for Architect/Engineer's benefit as contract administrator or for Owner.

B. Submit report within 10 days of observation to Architect/Engineer for information.

C. Submit for information for limited purpose of assessing conformance with information given and design concept expressed in Contract Documents.

1.14 ERECTION DRAWINGS

A. Submit drawings for Architect/Engineer's benefit as contract administrator or for Owner.

B. Submit for information for limited purpose of assessing conformance with information given and design concept expressed in Contract Documents.

C. Data indicating inappropriate or unacceptable Work may be subject to action by Architect/Engineer or Owner.

1.15 CONSTRUCTION PHOTOGRAPHS

A. Provide photographs of site and construction throughout progress of Work produced by photographer, acceptable to Architect/Engineer.

B. Each month submit photographs with Application for Payment.

C. Photographs: One print prints; color, glossy; 4 x 6 inch size; mounted on soft card stock, with left edge binding margin for three hole punch.

D. Take two site photographs from differing directions and six interior photographs indicating relative progress of the Work, 3 days maximum prior to submitting.

E. Identify each print on front. Identify name of Project, contract number orientation of view, date and time of view.

F. Deliver negatives or electronic data to Owner with project record documents. Catalog and index negatives in chronological sequence; include typed table of contents.

1.16 PROJECT WARRANTY AND MAINTENANCE MANUAL:

A. Prior to final payment, the Contractor shall furnish two complete sets, in tabbed standard size ring binders, of equipment data, maintenance information, operations instructions, and warranties for equipment and systems provided under this contract. See Section 01700 for detailed requirements.

B. Provide warranties as specified. Warranties shall not limit length of time for remedy of damages Owner may have by legal statute. Contractor, Supplier, or Installer responsible for performance of warranty shall sign warranties.

C. Material Safety Data Sheets (MSDSs): Submit information directly to Owner; do not submit to Architect, except as required in "Action Submittals" Article.
   1. Architect will not review submittals that include MSDSs and will return the entire submittal for resubmittal.

PART 2 - PRODUCTS (Not Used)

PART 3 - EXECUTION

3.1 CONTRACTOR'S REVIEW

A. Review each submittal and check for coordination with other Work of the Contract and for compliance with the Contract Documents. Note corrections and field dimensions. Mark with approval stamp before submitting to Architect.

B. Approval Stamp: Stamp each submittal with a uniform, approval stamp. Include Project name and location, submittal number, Specification Section title and number, name of reviewer, date of Contractor's approval, and statement certifying that submittal has been reviewed, checked, and approved for compliance with the Contract Documents.

PART 4 - ARCHITECT'S/ACTION

4.1 General: Architect will not review submittals that do not bear Contractor's approval stamp and will return them without action.

A. Action Submittals: Architect will review each submittal, make marks to indicate corrections or modifications required, and return it. Architect will stamp each submittal with an action stamp and will mark stamp appropriately to indicate action taken.

B. Informational Submittals: Architect will review each submittal and will not return it, or will return it if it does not comply with requirements. Architect will forward each submittal to appropriate party.

C. Partial submittals are not acceptable, will be considered nonresponsive, and will be returned without review.

D. Submittals not required by the Contract Documents may not be reviewed and may be discarded.

END OF SECTION

SECTION 01400
QUALITY CONTROL REQUIREMENTS

PART 1 - GENERAL

1.1 SECTION INCLUDES

A. Quality control and control of installation

B. Tolerances

C. References

D. Mock-up requirements

E. Testing and inspection services

F. Manufacturers' field services

G. Examination

H. Preparation

1.2 QUALITY CONTROL AND CONTROL OF INSTALLATION

A. Monitor quality control over Suppliers, Manufacturers, products, services, site conditions, and workmanship, to produce Work of specified quality.

B. Comply fully with Manufacturers' instructions, including each step in sequence and secure Manufacturer's certification as certified installer, when applicable.

C. When Manufacturers' instructions conflict with Contract Documents, request clarification from Architect/Engineer before proceeding.

D. Minimum Quantity or Quality Levels: The quantity or quality level shown or specified shall be the minimum provided or performed. The actual installation may comply exactly with the minimum quantity or quality specified, or it may exceed the minimum within reasonable limits. To comply with these requirements, indicated numeric values are minimum or maximum, as appropriate, for the context of requirements. Refer uncertainties to Architect for a decision before proceeding.

E. Comply with specified standards as minimum quality for the Work except where more stringent tolerances, codes, or specified requirements indicate higher standards or more precise workmanship.

F. Perform Work by persons qualified to produce required and specified quality. The Contractor shall comply with applicable local, state, and federal codes and regulations.
   1. Installer Qualifications: A firm or individual experienced in installing, erecting, or assembling work similar in material, design, and extent to that indicated for

this Project, whose work has resulted in construction with a record of successful in-service performance.

2. Manufacturer Qualifications: A firm experienced in manufacturing products or systems similar to those indicated for this Project and with a record of successful in-service performance, as well as sufficient production capacity to produce required units.
3. Fabricator Qualifications: A firm experienced in producing products similar to those indicated for this Project and with a record of successful in-service performance, as well as sufficient production capacity to produce required units.
4. Professional Engineer Qualifications: A professional engineer who is legally qualified to practice in jurisdiction where Project is located and who is experienced in providing engineering services of the kind indicated. Engineering services are defined as those performed for installations of the system, assembly, or product that are similar to those indicated for this Project in material, design, and extent.
5. Testing Agency Qualifications: An NRTL, an NVLAP, or an independent agency with the experience and capability to conduct testing and inspecting indicated, as documented according to ASTM E 548; and with additional qualifications specified in individual Sections; and where required by authorities having jurisdiction, that is acceptable to authorities.
6. NRTL: A nationally recognized testing laboratory according to 29 CFR 1910.7.
7. NVLAP: A testing agency accredited according to NIST's National Voluntary Laboratory Accreditation Program.
8. Factory-Authorized Service Representative Qualifications: An authorized representative of Manufacturer who is trained and approved by Manufacturer to inspect installation of Manufacturer's products that are similar in material, design, and extent to those indicated for this Project.

G. Verify field measurements are as indicated on Shop Drawings or as instructed by Manufacturer.

H. Secure products in place with positive anchorage devices designed and sized to withstand stresses, vibration, physical distortion, or disfigurement.

I. Associated Services: Cooperate with agencies performing required tests, inspections, and similar quality-control services, and provide reasonable auxiliary services as requested. Notify agency sufficiently in advance of operations to permit assignment of personnel. Provide the following:
   1. Access to the Work
   2. Incidental labor and facilities necessary to facilitate tests and inspections
   3. Adequate quantities of representative samples of materials that require testing and inspecting. Assist agency in obtaining samples
   4. Facilities for storage and field curing of test samples
   5. Delivery of samples to testing agencies
   6. Preliminary design mix proposed for use for material mixes that require control by testing agency
   7. Security and protection for samples and for testing and inspecting equipment at Project site

J. Coordination: Coordinate sequence of activities to accommodate required quality-assurance and -control services with a minimum of delay and to avoid necessity of removing and replacing construction to accommodate testing and inspecting.
   1. Schedule times for tests, inspections, obtaining samples, and similar activities.

1.3 TOLERANCES

A. Monitor fabrication and installation tolerance control of products to produce acceptable Work. Do not permit tolerances to accumulate.

B. Comply with Manufacturers' tolerances. When Manufacturers' tolerances conflict with Contract Documents, request clarification from Architect/Engineer before proceeding.

C. Adjust products to appropriate dimensions; position before securing products in place.

1.4 REFERENCES

A. For products or workmanship specified by association, trade, or other consensus standards, comply with requirements of standard, except when more rigid requirements are specified or are required by applicable codes.

B. Conform to reference standard by date of issue current on date for receiving bids, except where specific date is established by code.

C. Obtain copies of standards where required by product specification sections.

D. When specified reference standards conflict with Contract Documents, request clarification from Architect/Engineer before proceeding.

E. Neither contractual relationships, duties, nor responsibilities of parties in Contract nor those of Architect/Engineer shall be altered from Contract Documents by mention or inference otherwise in reference documents.

1.5 MOCK-UP REQUIREMENTS

A. Mockups: Before installing portions of the Work requiring mockups, build mockups for each form of construction and finish required to comply with the following requirements, using materials indicated for the completed Work:
   1. Build mockups in location and of size indicated or, if not indicated, as directed by Architect.
   2. Notify Architect 14 days in advance of dates and times when mockups will be constructed.
   3. Demonstrate the proposed range of aesthetic effects and workmanship.
   4. Obtain Architect's approval of mockups before starting work, fabrication, or construction.
   5. Allow seven days for initial review and each re-review of each mockup.

B. Assemble and erect specified items with specified attachment and anchorage devices, flashings, seals, and finishes.

C. Maintain mockups during construction in an undisturbed condition as a standard for judging the completed Work.

D. Where mock-up has been accepted by Architect/Engineer and is specified in product specification sections to be removed; remove mock-up and clear area when directed to do so by Architect/Engineer.

E. Demolish and remove mockups when directed, unless otherwise indicated.

1.6 TESTING AND INSPECTION SERVICES

A. Refer to Specifications Section 01410 – Testing Laboratory Services.

B. Employ and pay for services of an independent testing agency or laboratory acceptable to Owner to perform specified testing.
   1. Prior to start of Work, submit testing laboratory name, address, and telephone number, and names of full time specialist and responsible officer.
   2. Submit copy of report of laboratory facilities inspection made by Materials Reference Laboratory of National Bureau of Standards during most recent inspection, with memorandum of remedies of deficiencies reported by inspection.

C. The independent firm will perform tests, inspections and other services specified in individual specification sections and as required by Architect/Engineer and / or Owner.
   1. Laboratory: Authorized to operate at Project location.
   2. Laboratory Staff: Maintain full time registered Engineer on staff to review services.
   3. Testing Equipment: Calibrated at reasonable intervals with devices of an accuracy traceable to National Bureau of Standards or accepted values of natural physical constants.

D. Testing, inspections and source quality control may occur on or off project site. Perform off-site testing as required by Architect/Engineer or Owner.

E. The work will be observed by the Architect/Engineer (Owner's Representative) or the Owners field observer and performed to his satisfaction in accordance with the Contract Plans and Specifications. The Owner's representative and Architect/Engineer will decide all questions which may arise as to the quality of acceptability of materials furnished and work performed; the manner of performance and rate of progress of the work; the interpretations of the contract plans and specifications; and the acceptable fulfillment of the contract on the part of the Contractor. The Owner's decisions will be final, and he will have executive authority to enforce and make effective such decisions and orders if the Contractor fails to carry out the work promptly.

F. Reports will be submitted by independent firm to Architect/Engineer, TxDOT Project Manager (2 copies) and Contractor, indicating observations and results of tests and indicating compliance or non-compliance with Contract Documents.

G. Cooperate with independent firm; furnish samples of materials, design mix, equipment, tools, storage, safe access, and assistance by incidental labor as requested.

1. Notify Architect/Engineer and independent firm 48 hours prior to expected time for operations requiring services.
2. Make arrangements with independent firm and pay for additional samples and tests required for Contractor's use.

H. Testing and employment of testing agency or laboratory shall not relieve Contractor of obligation to perform Work in accordance with requirements of Contract Documents.

I. Re-testing or re-inspection required because of non-conformance to specified requirements shall be performed by same independent firm on instructions by Architect/Engineer. Payment for re-testing or re-inspection will be charged to Contractor by deducting testing charges from Contract Sum/Price.

J. Agency Responsibilities:
1. Test samples of mixes submitted by Contractor.
2. Provide qualified personnel at site. Cooperate with Architect/Engineer and Contractor in performance of services.
3. Perform specified sampling and testing of products in accordance with specified standards.
4. Ascertain compliance of materials and mixes with requirements of Contract Documents.
5. Promptly notify Architect/Engineer and Contractor of observed irregularities or non-conformance of Work or products.
6. Perform additional tests required by Architect/Engineer.
7. Attend preconstruction meetings and progress meetings.

K. Agency Reports: After each test, promptly submit two copies of report to Architect/Engineer and to Contractor. When requested by Architect/Engineer, provide interpretation of test results.

L. Limits On Testing Authority:
1. Agency or laboratory may not release, revoke, alter, or enlarge on requirements of Contract Documents.
2. Agency or laboratory may not approve or accept any portion of the Work.
3. Agency or laboratory may not assume duties of Contractor.
4. Agency or laboratory has no authority to stop the Work.

M. Any materials and/or workmanship which are rejected by the Engineer by reason of failure to conform to the requirements of the plans or specifications shall be removed and replaced at Contractor's expense, including testing expense to correct faulty work.

N. Inspections and testing required by law, ordinances, rules and regulations or other public authorities are the responsibility of the Contractor. It is the sole responsibility of the Contractor to call for testing and any work not tested will be automatically rejected

O. Contained in the various specification sections are requirements for certification of products, testing, adjusting, and balancing of equipment and other tests and standards. Testing is required for, but not limited to, the following items of work:

1. Soils-compaction control and hydrocarbon concentrations
2. Cast-in-place concrete
3. Concrete reinforcement
4. Asphalt pavement
5. Cement-Sand Backfill material
6. Crushed limestone base materials
7. Water and sludge
8. Other items in the Scope of Work

1.7 CONTRACTOR'S RESPONSIBILITIES

A. Cooperate with laboratory personnel; provide access to the work area.

B. Provide to laboratory, preliminary representative samples of materials to be tested in required quantities.

C. Furnish labor and equipment:
1. To provide access to the work to be tested.
2. To obtain and handle samples at the site.
3. To facilitate inspections and tests.
4. For laboratory's exclusive use for storage and curing of test samples

1.8 MANUFACTURERS' FIELD SERVICES

A. When specified in individual specification sections, require material or product Suppliers or Manufacturers to provide qualified staff personnel to observe site conditions, conditions of surfaces and installation, quality of workmanship, start-up of equipment, test, adjust and balance of equipment and as applicable, and to initiate instructions when necessary.

B. The Contractor shall provide to the Owner the names of individuals and Manufacturer's representative report of observations and site decisions or instructions given to Applicators or Installers that are supplemental or contrary to Manufacturer's written instructions.

C. Report observations and site decisions or instructions given to Applicators or Installers that are supplemental or contrary to Manufacturers' written instructions.

D. Refer to Section 01330 - SUBMITTAL PROCEDURES, MANUFACTURERS' FIELD REPORTS article.

PART 2 - PRODUCTS (Not Used)

PART 3 - EXECUTION

3.1 EXAMINATION

A. Verify existing site conditions and substrate surfaces are acceptable for subsequent Work. Beginning new Work means acceptance of existing conditions.

B. Verify existing substrate is capable of structural support or attachment of new Work being applied or attached.

C. Examine and verify specific conditions described in individual specification sections.

D. Verify utility services are available, of correct characteristics, and in correct locations.

3.2 PREPARATION

A. Clean substrate surfaces prior to applying next material or substance.

B. Seal cracks or openings of substrate prior to applying next material or substance.

C. Apply Manufacturer required or recommended substrate primer, sealer, or conditioner prior to applying new material or substance in contact or bond.

3.3 TEST AND INSPECTION LOG

A. Prepare a record of tests and inspections. Include the following:
1. Date test or inspection was conducted
2. Description of the Work tested or inspected
3. Date test or inspection results were transmitted to Architect
4. Identification of testing agency or special inspector conducting test or inspection

B. Maintain log at Project site. Post changes and modifications as they occur. Provide access to test and inspection log for Architect's reference during normal working hours.

3.4 REPAIR AND PROTECTION

A. General: On completion of testing, inspecting, sample taking, and similar services, repair damaged construction and restore substrates and finishes.
1. Provide materials and comply with installation requirements specified in other Specification Sections. Restore patched areas and extend restoration into adjoining areas with durable seams that are as invisible as possible.
2. Comply with the Contract Document requirements for Division 1 Section "Cutting and Patching."

B. Protect construction exposed by or for quality-control service activities.

C. Repair and protection are Contractor's responsibility, regardless of the assignment of responsibility for quality-control services.

END OF SECTION

SECTION 01410
TESTING LABORATORY SERVICES

PART 1 - GENERAL

1.1 RELATED DOCUMENTS: Provision established within the General and Supplementary General Conditions of the Contract, Division 1 – General Requirements, and the Drawings are collectively applicable to this Section.

1.2 WORK INCLUDES

A. The testing laboratory shall make all inspections and perform all tests in accordance with the building code, local authorities, state regulations, **TxDOT Test Standards**, and the ASTM specifications and the Contract Documents.

B. Materials and workmanship not meeting the required standards are to be removed and replaced. Replacement and subsequent testing shall be at the expense of the Contractor.

C. Testing, inspection and certifications specified in other sections of these Specifications shall be paid by the Contractor.

D. Inspection by the laboratory shall not relieve the Contractor or Fabricator of his responsibility to furnish materials and workmanship in accordance with the Contract Documents.

1.3 SELECTION AND PAYMENT

A. The General Contractor shall employ and pay for services of an independent testing laboratory, to perform inspection and testing services specified in this section and noted in other specifications sections. The selected independent testing laboratory shall furnish unit or hourly costs for performing work as described in this section. The Owner reserves the right to determine which tests and the quantity of each herein described or elected.

1.4 REFERENCED STANDARDS

A. The latest adopted edition of all standards referenced in the Section shall apply, unless noted otherwise. In case of conflict between these Contract Documents and a referenced standard, the Contract Documents shall govern. In case of conflict between these Contract Documents and the Building Code, the more stringent shall govern.

1.5 QUALITY ASSURANCE

A. Testing Laboratory shall meet the requirements of ASTM E329 and ASTM E543.

B. Testing Laboratory shall be insured against errors and omissions by a professional liability insurance policy having a limit of liability not less than $500,000.

C. Testing Laboratory shall be under the direction of a Registered Engineer licensed in the State of Texas, having at least five years experience in inspection and testing of construction materials.

D. Laboratory staff monitoring concrete work shall be ACI certified inspectors.

E. Laboratory staff performing structural steel inspection shall be currently certified AWS Certified Welding Inspectors (CWI), in accordance with the provisions of AWS QCI, "Standard and Guide for Qualification and Certification of Welding Inspectors". The inspector may be supported by assistant inspectors who may perform specific inspection functions under the supervision of the inspector. Assistant inspectors shall be currently certified AWS Certified Associate Welding Inspectors (CAWI). The work of the assistant inspectors shall be regularly monitored by the inspector, generally on a daily basis.

F. Testing Equipment: Calibrated at reasonable intervals with devices of accuracy traceable to either National Bureau of Standards or accepted values of natural physical constants.

1.6 LABORATORY RESPONSIBILITIES

A. Attend pre-construction meetings and progress meetings when requested, to coordinate work with the Contractor and address quality control issues.

B. Test samples of design mixes submitted by Contractor.

C. Provide qualified personnel at site. Cooperate with Architect/Engineer and Contractor in performance of services.

D. Perform specified inspecting, sampling, and testing of Products in accordance with specified standards.

E. Ascertain compliance of materials and mixes with requirements of Contract Documents.

F. Promptly notify Architect/Engineer and Contractor of observed irregularities or non-conformance of Work or Materials.

G. Perform all inspections and tests in accordance with building code requirements for "Special Inspection" whether or not such inspections are specified in the Contract Documents.

1.7 LABORATORY REPORTS

A. After each inspection and test, promptly submit copies of laboratory reports to Architect, Engineer, Owner and to Contractor.

B. Include:
1. Date issued
2. Project title and number
3. Name of inspector
4. Date and time of sampling or inspection
5. Identification of product and specifications section
6. Location in the Project
7. Type of inspection or test
8. Date of test
9. Results of tests
10. Conformance with Contract Documents

1.8 LIMITS ON TESTING LABORATORY AUTHORITY

A. Laboratory may not release, revoke, alter, or enlarge the requirements of the Contract Documents.

B. Laboratory may not approve or accept any portion of the Work, except where such approval is specifically called for in these specifications.

C. Laboratory may not assume any duties of Contractor.

D. Laboratory has no authority to stop the Work.

1.9 CONTRACTOR RESPONSIBILITIES

A. See technical sections of these specifications for specific requirements.

B. Advise laboratory sufficiently in advance of construction operations to allow laboratory to complete any required checks or tests and to assign personnel for field inspection and testing as specified.

C. Provide facilities for safe storage and proper curing of concrete test samples on project site for the first 24 hours and also for subsequent field curing as required by ASTM specifications C31.

D. Provide incidental labor and equipment as required to assist laboratory personnel in obtaining and handling samples at the site and in accessing work for inspection.

E. Furnish concrete mix designs, in accordance with ACI 301, Section 3.9, made by an independent testing laboratory or qualified concrete supplier. Where mix designs are required, the laboratory shall be selected and paid by the Contractor.

F. Provide current welder certifications for each welder to be employed.

G. Furnish fabrication and erection inspection of all welds in accordance with the AWS D1.1, Chapter 6.

H. Pre-qualification of all welding procedures to be used in executing the work.

PART 2 - PRODUCTS (Not Used)

PART 3 - EXECUTION

3.1 FILLING AND BACKFILLING

A. The Contractor shall make available to the laboratory, adequate samples of each fill and backfill material from the proposed sources of supply not less than 10 days prior to the start of the work.

B. Laboratory shall analyze samples as required to provide a soil description and to determine compliance with quality requirements. Perform the following tests:
   1. Test for liquid limit in accordance with ASTM D423.
   2. Test for plastic limit of soils and plasticity index of soils in accordance with ASTM D424.
   3. Tests for moisture density relations of soil in accordance with ASTM D698 or D1557, as applicable.

C. Furnish a report for each individual test and state whether sample conforms to specified requirements or reasons for nonconformance.

D. Inspect under slab drainage material and placement for compliance with specified gradation, quality and compaction.

E. Make in-place compaction test for moisture content, moisture-density relationship, and density of fill material after compaction to determine that backfill materials have been compacted to the specified density. Number of tests shall be as follows:
   1. One test for each 5,000 square feet of area of each lift placed under floor slab. Stagger test locations in each lift from those in the previous lift. Perform a minimum of three tests for each lift.
   2. One test for each 100 linear feet, or portion thereof, of each lift placed against foundation walls, with locations staggered from those in the previous lift.
   3. One test of each lift placed below any isolated footing, and every 100 linear feet under continuous footings, with locations taken on a different side from that in the lift below.

3.2 CONCRETE REINFORCING STEEL AND EMBEDDED METAL ASSEMBLIES

A. Inspect all concrete reinforcing steel prior to placing of concrete for compliance with the Contract Documents and approved shop drawings. All instances of noncompliance shall be immediately brought to the attention of the Contractor for correction. If uncorrected by the Contractor, they shall be listed in the report.

B. Observe and report on the following:
   1. Number and size of bars
   2. Bending and lengths of bars
   3. Splicing
   4. Clearance to forms including chair heights
   5. Clearance between bars or spacing
   6. Rust, form oil, and other contaminations
   7. Grade of Steel
   8. Securing, tying and chairing of bars
   9. Excessive congestion of reinforcing steel
   10. Installation of anchor bolts and placement of concrete around anchor bolts
   11. Fabrication and installation of embedded metal assemblies, including visual inspection of all welds
   12. Visually inspect studs and deformed bar anchors on embedded assemblies for compliance with Contract Documents.

C. Provide a qualified, experienced inspector to inspect reinforcing steel. Inspector shall have a minimum of three years experience inspecting reinforcing steel in project of similar size.

3.3 CONCRETE INSPECTION AND TESTING

A. Secure composite samples of concrete at the jobsite in accordance with ASTM C172.

B. Mold and cure three specimens from each sample in accordance with ASTM C31. The test cylinders shall be stored in the field 24 hours and then carefully transported to the laboratory and cured in accordance with ASTM C31.

C. Test specimens in accordance with ASTM C39. Two specimens shall be tested at 28 days for acceptance and one shall be tested at 7 days for information.

D. Make one strength test (three cylinders or beams) for each 75 cubic yards or fraction thereof, of each mix design placed in one day.

E. Make one slump test for each set of cylinders following the procedural requirements of ASTM C143 and ASTM C172. Make additional slump tests whenever the consistency of the concrete appears to vary. Do not permit placement of concrete having measured slump outside the limits given on the drawings, except when approved by the Architect. Slump tests corresponding to samples from which strength tests are made shall be reported with the strength test results. Other slump tests need not be reported.

F. Determine total air content of air entrained normal-weight concrete sample for each strength test in accordance with ASTM C231.

G. Determine temperature of concrete sample for each strength test.

H. Monitor the addition of water at the jobsite and the length of time the concrete is allowed to remain in the truck before placement. Report any significant deviation from the approved mix design to the Architect, the Contractor, and the concrete supplier.

I. Observe the placing of all concrete, except non structural slabs-on-grade and site work. Observe and report on placing method, consolidation, cold joints, and length of drop and displacement of reinforcing. Report deficiencies to the Contractor immediately for corrective action. Inspections may be reduced to a periodic basis when all procedures have been deemed satisfactory by the laboratory.

J. The testing laboratory shall certify each delivery ticket indicating class of concrete delivered (or placed), amount of water added and the time at which the cement and aggregate was dispensed into the truck, and the time at which concrete was discharged from the truck.

K. Evaluation and Acceptance:
   1. If the measured slump or air content of air entrained concrete falls outside the specified limits, a check test shall be made immediately on another portion of the same sample. In the event of a second failure, the concrete shall be considered to have failed to meet the requirements of the specifications and shall be rejected.

2. The strength level of the concrete will be considered satisfactory if the averages of all sets of three consecutive strength test results are equal to or exceed the specified strength and no individual test result (average of two cylinders) is below the specified strength by more than 500 psi.
3. Completed concrete work will be accepted when the requirements of "Specifications for Structural Concrete for Building," ACI 301, Chapter 18 have been met.

L. Comply with ACI 311, "Guide For Concrete Inspection" and "ACI Manual of Concrete Inspection" (SP-2).

M. Inspect the application of curing compound and monitor all curing conditions to assure compliance with Specification requirements. Report curing deficiencies to the Contractor immediately and submit a report to the Architect.

3.4 MASONRY

A. Compressive Test for Mortar:
1. Secure composite samples of mortar at the jobsite in accordance with ASTM C780.
2. Mold and cure three cube specimens in accordance with ASTM C109 and C780. Supervise the curing and protection provided by the Contractor for test specimens in the field and the transportation from the field to the laboratory. The specimens shall be stored in the field 24 hours and then be moved to the laboratory and cured in accordance with ASTM C780.
3. Test specimens in accordance with ASTM C780. Two specimens shall be tested at 28 days for acceptance and one shall be tested at 7 days for information.
4. Make one strength test (three cubes) for each 2,000 square feet of wall area.

3.5 STRUCTURAL STEEL

A. Inspect all structural steel during fabrication and during the after erection for conformance with Contract Documents and shop drawings, as requested by the Owner.

B. Shop Inspection:
1. Examination of steel for straightness and alignment
2. Examination of all fabricated pieces for compliance with Contract Documents and shop drawings
3. Visual examination of all shop welding
4. Ultrasonic testing of all full penetration welds
5. Examination of galvanizing
6. Examination of installation of shop welded shear studs
7. Examination of shop painting

C. Field Inspection:
1. Proper erection of all pieces
2. Proper installation of all bolts, including the checking of calibration of impact wrenches used with high strength bolts
3. Plumbness of structure and proper bracing
4. Field Painting
5. Visual examination of all field welding

6. Ultrasonic testing of all penetration welds
7. Installation of field welded shear studs

D. Qualification of Welders: Fabricator and erector shall provide the testing laboratory with names of welders to be employed in the work, together with certification that welders have passed qualification tests within the last year using procedures specified in the AWS D1.1. The Owner shall verify all welders' qualifications.

E. Inspection of shop and field welding shall be "verification inspection", in accordance with Section 6 of AWS D1.1 on an "as needed" basis, and as follows:
1. Visually inspect the welding of all shop fabricated members and note the location of all cover plates, connectors, bearing stiffeners, splices, and fillet welds for proper return around ends and check for seams, folds, and delaminations.
2. Ultrasonically test all penetration welds in accordance with ASTM E164.
3. Inspect surfaces to be welded. Surface preparations, fit-up and cleanliness of surface shall be noted.
4. The welding inspector shall be present during alignment and fit-up of members being welded, and shall check for correct surface preparation of root openings, sound weld metal and proper penetration in the root pass. Where weld has not penetrated completely, the inspector shall order the joint to be chipped down to sound metal, or gouged out and rewelded. Root passes shall be thoroughly inspected for cracks. All cracks shall be gouged out and rewelded to two inches beyond each end of crack.
5. The inspector shall check that all welds have been marked with the welders' symbol. The inspector shall make the welds requiring repairs and shall make a reinspection. The inspector shall maintain a written record of all welds. Work completed and inspected shall receive an identification mark by the inspector.
6. The testing laboratory shall advise the Owner and the Architect of any shop and/or field conditions which, in his opinion, may require further tests and examination by means other than those specified. Such further tests and examinations shall be performed as authorized by the Owner and the Architect.
7. The Owner reserves the right to use ultrasonic or radiographic inspection to verify the adequacy of all welds. Testing procedures and acceptance criteria shall be as specified in AWS D1.1.

F. Inspection of bolted construction shall be in accordance with AISC "Specification for Structural Steel Buildings" and as follows:
1. All bolts shall be visually inspected to endure that the plies have been brought into snug contact.
2. High strength bolting shall be inspected in accordance with Section 9 of the AISC "Specifications for Structural Joints Using ASTM A325 or A490 Bolts."
3. For all high strength bolts, unless specifically noted on the Drawings to require only "snug-tight" installation, the inspector shall observe the required jobsite testing and calibration, and shall confirm that the procedure to be used provides the required tension.

3.6 METAL ROOF DECK

A. Field inspection shall consist of the following:
1. Checking types, gauges, and finishes for conformance with the Contract Documents and shop drawings

2. Examination for proper erection of all metal deck, including fastenings at supports and sidelaps, reinforcing of holes, and miscellaneous deck supports
3. Certification of all welders
4. Visual inspection of at least 25% of all welds

END OF SECTION

SECTION 01420
REFERENCES

PART 1 - GENERAL

1.1 RELATED DOCUMENTS

A. Drawings and general provisions of the Contract, including General and Supplementary Conditions and other Division 1 Specification Sections, apply to this Section.

1.2 DEFINITIONS

A. General: Basic Contract definitions are included in the Conditions of the Contract.

B. "Reviewed": When used to convey Architect's action on Contractor's submittals, applications, and requests, "Reviewed" is limited to Architect's duties and responsibilities as stated in the Conditions of the Contract.

C. "Directed": A command or instruction by Architect. Other terms including "requested," "authorized," "selected," "required," and "permitted" have the same meaning as "directed."

D. "Indicated": Requirements expressed by graphic representations or in written form on Drawings, in Specifications, and in other Contract Documents. Other terms including "shown," "noted," "scheduled," and "specified" have the same meaning as "indicated."

E. "Regulations": Laws, ordinances, statutes, and lawful orders issued by authorities having jurisdiction, and rules, conventions, and agreements within the construction industry that control performance of the Work.

F. "Furnish": Supply and deliver to Project site, ready for unloading, unpacking, assembly, installation, and similar operations.

G. "Install": Operations at Project site including unloading, temporarily storing, unpacking, assembling, erecting, placing, anchoring, applying, working to dimension, finishing, curing, protecting, cleaning, and similar operations.

H. "Provide": Furnish and install, complete and ready for the intended use.

I. "Project Site": Space available for performing construction activities. The extent of Project site is shown on Drawings and may or may not be identical with the description of the land on which Project is to be built.

1.3 INDUSTRY STANDARDS

A. Applicability of Standards: Unless the Contract Documents include more stringent requirements, applicable construction industry standards have the same force and effect as if bound or copied directly into the Contract Documents to the extent referenced. Such standards are made a part of the Contract Documents by reference.

B. Publication Dates: Comply with standards in effect as of date of the Contract Documents, unless otherwise indicated.

1.4 ABBREVIATIONS AND ACRONYMS

A. Industry Organizations: Where abbreviations and acronyms are used in Specifications or other Contract Documents, they shall mean the recognized name of the entities indicated in Gale Research's "Encyclopedia of Associations" or in Columbia Books' "National Trade & Professional Associations of the U.S."

B. Code Agencies: Where abbreviations and acronyms are used in Specifications or other Contract Documents, they shall mean the recognized name of the entities in the following list. Names, telephone numbers, and Web-site addresses are subject to change and are believed to be accurate and up-to-date as of the date of the Contract Documents.

ICBO	International Conference of Building Officials (See ICC)	
ICBO ES	ICBO Evaluation Service, Inc. (See ICC-ES)	
ICC	International Code Council (Formerly: CABO - Council of American Building Officials) www.iccsafe.org	(703) 931-4533
ICC-ES	ICC Evaluation Service, Inc. www.icc-es.org	(800) 423-6587 (562) 699-0543

C. Federal Government Agencies: Where abbreviations and acronyms are used in Specifications or other Contract Documents, they shall mean the recognized name of the entities in the following list. Names, telephone numbers, and Web-site addresses are subject to change and are believed to be accurate and up-to-date as of the date of the Contract Documents.

CPSC	Consumer Product Safety Commission www.cpsc.gov	(800) 638-2772 (301) 504-6816
DOC	Department of Commerce www.commerce.gov	(202) 482-2000
DOE	Department of Energy www.eren.doe.gov	(202) 586-9220
EPA	Environmental Protection Agency www.epa.gov	(202) 272-0167
FCC	Federal Communications Commission www.fcc.gov	(888) 225-5322
GSA	General Services Administration	(800) 488-3111

	www.gsa.gov	(202) 501-1888
NCHRP	National Cooperative Highway Research Program (See TRB)	
NIST	National Institute of Standards and Technology www.nist.gov	(301) 975-6478
OSHA	Occupational Safety & Health Administration www.osha.gov	(800) 321-6742 (202) 693-1999
RUS	Rural Utilities Service (See USDA)	(202) 720-9540
TRB	Transportation Research Board www.nas.edu/trb	(202) 334-2934

PART 2 - PRODUCTS (Not Used)

PART 3 - EXECUTION (Not Used)

END OF SECTION

SECTION 01500
TEMPORARY FACILITIES AND CONTROLS

PART 1 - GENERAL

1.1 SECTION INCLUDES

A. Temporary Utilities:
   1. Temporary electricity
   2. Temporary lighting for construction purposes
   3. Temporary heating
   4. Temporary cooling
   5. Temporary ventilation
   6. Telephone service
   7. Facsimile service
   8. Temporary water service
   9. Temporary sanitary facilities

B. Construction Facilities:
   1. Field offices and sheds
   2. Vehicular access
   3. Parking
   4. Progress cleaning and waste removal
   5. Project identification
   6. Traffic regulation

C. Temporary Controls:
   1. Barriers
   2. Enclosures and fencing
   3. Security
   4. Water control
   5. Dust control
   6. Erosion and sediment control
   7. Noise control
   8. Pest control
   9. Pollution control
   10. Rodent control

D. Removal of utilities, facilities, and controls.

1.2 USE CHARGES

A. General: Cost or use charges for temporary facilities shall be included in the Contract Sum. Allow other entities to use temporary services and facilities without cost, including, but not limited to, Architect, testing agencies, and authorities having jurisdiction.

B. Sewer Service: Pay sewer service use charges for sewer usage by all entities for construction operations.

C. Water Service: Pay water service use charges for water used by all entities for construction operations.

D. Electric Power Service: Pay electric power service use charges for electricity used by all entities for construction operations.

1.3 SUBMITTALS

A. Site Plan: Show temporary facilities, utility hookups, staging areas, and parking areas for construction personnel.

1.4 TEMPORARY ELECTRICITY

A. Provide and pay for power service required from utility source as needed for construction operation.
   1. Exercise measures to conserve energy.
   2. Provide and install temporary overhead power from Utility Company.
   3. Set temporary meter and switchgear at start of construction.
   4. Specified switchgear shall not be used to construct building until building is in “dry-in" stage.

B. Provide power outlets, with branch wiring and distribution boxes located as required for construction operations. Provide flexible power cords as required for portable construction tools and equipment.

C. Permanent convenience receptacles may not be utilized during construction.

1.5 TEMPORARY LIGHTING FOR CONSTRUCTION PURPOSES

A. Provide and maintain lighting for construction operations. Provide temporary lighting with local switching that provides adequate illumination for construction operations, observations, inspections, and traffic conditions.

B. Provide and maintain lighting to exterior staging and storage areas after dark for security purposes. Install and operate temporary lighting that fulfills security and protection requirements without operating entire system.

C. Provide branch wiring from power source to distribution boxes with lighting conductors, pigtails, and lamps for specified lighting levels.

D. Maintain lighting and provide routine repairs.

E. Permanent building lighting may be utilized during construction.

1.6 TEMPORARY HEATING

A. Provide and pay for heating devices and heat as needed to maintain specified conditions for construction operations

B. Prior to operation of permanent equipment for temporary heating purposes, verify installation is approved for operation, equipment is lubricated and filters are in place. Provide and pay for operation, maintenance, and regular replacement of filters and worn or consumed parts. Owner must authorize use of permanent system for temporary purposes.

C. Maintain minimum ambient temperature of 50 degrees F in areas where construction is in progress, unless indicated otherwise in product sections.

1.7 TEMPORARY COOLING

A. Provide and pay for cooling devices and cooling as needed to maintain specified conditions for construction operations.

B. Enclose building prior to activating temporary cooling in accordance with Enclosures article in this section.

C. Prior to operation of permanent equipment for temporary cooling purposes, verify installation is approved for operation, equipment is lubricated and filters are in place. Provide and pay for operation, maintenance, and regular replacement of filters and worn or consumed parts. Owner must authorize use of permanent system for temporary purposes.

D. Maintain maximum ambient temperature of 80 degrees F in areas where construction is in progress, unless indicated otherwise in specifications.

1.8 TEMPORARY VENTILATION

A. Ventilate enclosed areas to achieve curing of materials, to dissipate humidity, and to prevent accumulation of dust, fumes, vapors, or gases. Owner must authorize use of permanent system for temporary purposes.

1.9 TELEPHONE SERVICE

A. Provide, maintain, and pay for telephone service to field office at time of project mobilization.

B. Contractor shall provide, maintain, and pay for telephone service for field operations at time of project mobilization. No calls shall be made using Owner's equipment. In the event of a telephone charge to an Owner’s telephone, the Contractor shall be responsible for reimbursing the Owner for long distance charges. Reimbursement shall be made prior to the Owner releasing monies on payment draws.

C. Electronic Communication Service: Provide temporary electronic communication service, including electronic mail, in common-use facilities.

1.10 FACSIMILE SERVICE

A. Provide, maintain and pay for facsimile service and dedicated telephone line to field office at time of project mobilization.

1.11 TEMPORARY WATER SERVICE

A. Provide and pay for suitable quality water service as needed to maintain specified conditions for construction operations.
   1. Exercise measures to conserve energy.

B. Extend branch piping with outlets located so water is available by hoses with threaded connections. Provide temporary pipe insulation to prevent freezing.

1.12 TEMPORARY SANITARY FACILITIES

A. Provide and maintain required facilities and enclosures. Existing facility use is not permitted. Provide facilities at time of project mobilization.

B. Provide temporary toilets, wash facilities, and drinking water for use of construction personnel. Comply with authorities having jurisdiction for type, number, location, operation, and maintenance of fixtures and facilities.

C. At end of construction, return existing facilities used for construction operations to same or better condition as original condition.

1.13 FIELD OFFICES AND SHEDS

A. Office: Weather tight, with lighting, electrical outlets, heating, cooling and ventilating equipment, and equipped with sturdy furniture and drawing display table.

B. Provide space for Project meetings, with table and chairs to accommodate 10 persons.

C. Locate offices and sheds minimum distance of 30 feet from existing and new structures. In the event the Contractor furnishes a field office, the office shall be located as directed by the Owner, within the limits of construction. No use of Owners equipment will be permitted.

D. Construction: Portable or mobile buildings, or buildings constructed with floors raised above ground, securely fixed to foundations with steps and landings at entrance doors.
   1. Construction: Structurally sound, secure, weather tight enclosures for office and storage spaces. Maintain during progress of Work; remove when no longer needed.
   2. Temperature Transmission Resistance of Floors, Walls, and Ceilings: Compatible with occupancy and storage requirements.
   3. Exterior Materials: Weather resistant, finished color acceptable to Owner.

4. Fire Extinguishers: Appropriate type fire extinguisher at each office and each storage area.

E. Storage Areas And Sheds: Size to storage requirements for products of individual Sections, allowing for access and orderly provision for maintenance and for inspection of products to requirements of Section 01600.
   1. Store combustible materials apart from building.

F. Preparation: Fill and grade sites for temporary structures sloped for drainage away from buildings.

G. Installation:
   1. Install office spaces ready for occupancy.
   2. Employee Residential Occupancy: Not allowed on Owner's property.

H. Removal: At completion of Work remove buildings, foundations, utility services, and debris. Restore areas.

1.14 VEHICULAR ACCESS

A. Construct temporary all-weather access roads from public thoroughfares to serve construction area, of width and load bearing capacity to accommodate unimpeded traffic for construction purposes.

B. Construct temporary culverts to span low areas and allow unimpeded drainage.

C. Extend and relocate vehicular access as Work progress requires, provide detours as necessary for unimpeded traffic flow.

D. Location approved by Owner.

E. Provide unimpeded access for emergency vehicles. Maintain 20 feet wide driveways with turning space between and around combustible materials.

F. Provide and maintain access to fire hydrants and control valves free of obstructions.

G. Provide means of removing mud from vehicle wheels before entering streets.

H. Do not use existing on-site roads for construction traffic.

1.15 PARKING

A. Provide temporary surface parking areas to accommodate construction personnel.

B. Locate as approved by Owner.

C. Use of existing on-site streets and driveways used for construction traffic is not permitted. Tracked vehicles not allowed on paved areas.

D. Use of existing parking facilities used by construction personnel is not permitted.

E. Do not allow heavy vehicles or construction equipment in parking areas.

F. Do not allow vehicle parking on existing pavement.

G. Permanent Pavements And Parking Facilities:
   1. Prior to Substantial Completion, bases for permanent roads and parking areas may be used for construction traffic.
   2. Avoid traffic loading beyond paving design capacity. Tracked vehicles not allowed.

H. Maintenance:
   1. Maintain traffic and parking areas in sound condition free of excavated material, construction equipment, products, mud, snow, and ice.
   2. Maintain existing paved areas used for construction; promptly repair breaks, potholes, low areas, standing water, and other deficiencies, to maintain paving and drainage in original, or specified, condition.

I. Mud from Site Vehicles: Provide means of removing mud from vehicle wheels before entering streets.

1.16 PROGRESS CLEANING AND WASTE REMOVAL

A. Maintain areas free of waste materials, debris, and rubbish. Maintain site in clean and orderly condition.

B. Remove debris and rubbish from pipe chases, plenums, attics, crawl spaces, and other closed or remote spaces, prior to enclosing spaces.

C. Broom and vacuum clean interior areas prior to start of surface finishing, and continue cleaning to eliminate dust.

D. Waste Disposal Facilities: Provide waste-collection containers in sizes adequate to handle waste from construction operations. Comply with requirements of authorities having jurisdiction. Collect and remove waste materials, debris, and rubbish from site weekly and dispose off-site.
   1. Remove waste upon owner representative’s request.

1.17 PROJECT IDENTIFICATION

A. Project Identification Sign:
   1. One painted sign, 32 sq ft area, bottom 6 feet above ground
   2. Content: Name of Prime Contractor and major Subcontractors
   3. Graphic Design, Colors, Style of Lettering: Reviewed by Owner
   4. No other signs are allowed without Owner permission except those required by law

B. Design sign and structure to withstand building code wind velocity.

C. Sign Painter: Experienced as professional sign painter.

D. Finishes, Painting: Adequate to withstand weathering, fading, and chipping for duration of construction.

E. Show content, layout, lettering, and color.

F. Sign Materials:
1. Structure and Framing: New wood, structurally adequate
2. Sign Surfaces: Exterior grade plywood
3. Rough Hardware: Galvanized
4. Paint and Primers: Exterior quality

G. Installation:
1. Erect at designated location.
2. Erect supports and framing on secure foundation, rigidly braced and framed to resist wind loadings.
3. Install sign surface plumb and level, with butt joints. Anchor securely.
4. Paint exposed surfaces of sign, supports, and framing.

H. Maintenance: Maintain signs and supports clean, repair deterioration and damage.

I. Removal: Remove signs, framing, supports, and foundations at completion of Project and restore area.

1.18 TRAFFIC REGULATION

A. Signs, Signals, And Devices:
1. Post Mounted and Wall Mounted Traffic Control and Informational Signs
2. Traffic Cones and Drums, Flares and Lights: As approved by authority having jurisdiction
3. Flag person Equipment: As required by authority having jurisdiction

B. Flag Persons: Provide trained and equipped flag persons to regulate traffic when construction operations or traffic encroach on public traffic lanes.

C. Flares and Lights: Use flares and lights during hours of low visibility to delineate traffic lanes and to guide traffic.

D. Haul Routes:
1. Consult with authority having jurisdiction, establish public thoroughfares to be used for haul routes and site access.
2. Confine construction traffic to designated haul routes.

E. Traffic Signs:
1. Provide signs at approaches to site and on site, at crossroads, detours, parking areas, and elsewhere as needed to direct construction and affected public traffic.
2. Relocate as Work progresses, to maintain effective traffic control.

F. Removal:
1. Remove equipment and devices when no longer required.
2. Repair damage caused by installation.
3. Remove post settings.

1.19 BARRIERS

A. Provide barriers to prevent unauthorized entry to construction areas, to allow for Owner's use of site, and to protect existing facilities and adjacent properties from damage from construction operations.

B. Provide barricades required by authorities having jurisdiction for public rights-of-way.

C. Provide protection for plants designated to remain. Replace damaged plants.

D. Protect non-owned vehicular traffic, stored materials, site, and structures from damage.

1.20 ENCLOSURES AND FENCING

A. Construction: Commercial grade chain link fence.

B. Provide 6 feet high fence around construction site; equip with vehicular gates with locks.

1.21 SECURITY

A. Security Program:
1. Protect Work from theft, vandalism, and unauthorized entry.
2. Initiate program in coordination with Owner's existing security system at project mobilization.
3. Maintain program throughout construction period until Owner occupancy.

B. Entry Control:
1. Restrict entrance of persons and vehicles into Project site.

C. Personnel Identification:
1. Provide identification badge to each person authorized to enter premises.
2. Maintain list of accredited persons, submit copy to Owner on request.
3. Require return of badges at expiration of their employment on the Work.

D. Security Enclosure and Lockup: Install substantial temporary enclosure around partially completed areas of construction. Provide lockable entrances to prevent unauthorized entrance, vandalism, theft, and similar violations of security.

E. Temporary Fire Protection: Install and maintain temporary fire-protection facilities of types needed to protect against reasonably predictable and controllable fire losses. Comply with NFPA 241.
1. Prohibit smoking in construction areas.

2. Supervise welding operations, combustion-type temporary heating units, and similar sources of fire ignition according to requirements of authorities having jurisdiction.
3. Develop and supervise an overall fire-prevention and -protection program for personnel at Project site. Review needs with local fire department and establish procedures to be followed. Instruct personnel in methods and procedures. Post warnings and information.

F. Restrictions:
1. Do no work on days indicated in Owner-Contractor Agreement.

1.22 WATER CONTROL

A. Grade site to drain. Maintain excavations free of water. Provide, operate, and maintain pumping equipment.

B. Protect site from puddling or running water. Provide water barriers as required to protect site from soil erosion.

1.23 DUST CONTROL

A. Execute Work by methods to minimize raising dust from construction operations.

B. Provide positive means to prevent air-borne dust from dispersing into atmosphere.

1.24 EROSION AND SEDIMENT CONTROL

A. Plan and execute construction by methods to control surface drainage from cuts and fills, from borrow and waste disposal areas. Prevent erosion and sedimentation.

B. Minimize surface area of bare soil exposed at one time.

C. Provide temporary measures including berms, dikes, and drains, and other devices to prevent water flow.

D. Construct fill and waste areas by selective placement to avoid erosive surface silts or clays.

E. Periodically inspect earthwork to detect evidence of erosion and sedimentation; promptly apply corrective measures.

1.25 PEST CONTROL

A. Provide methods, means, and facilities to prevent pests and insects from damaging the Work.

1.26 POLLUTION CONTROL

A. Provide methods, means, and facilities to prevent contamination of soil, water, and atmosphere from discharge of noxious, toxic substances, and pollutants produced by construction operations.

B. Comply with pollution and environmental control requirements of authorities having jurisdiction.

1.27 RODENT CONTROL

A. Provide methods, means, and facilities to prevent rodents from accessing or invading premises.

1.28 REMOVAL OF UTILITIES, FACILITIES, AND CONTROLS

A. Remove temporary utilities, equipment, facilities, materials, prior to Substantial Completion inspection.

B. Remove underground installations, Grade site as indicated on Drawings.

C. Clean and repair damage caused by installation or use of temporary work.

PART 2 - PRODUCTS (Not Used)

PART 3 - EXECUTION

3.1 OPERATION, TERMINATION, AND REMOVAL

A. Supervision: Enforce strict discipline in use of temporary facilities. To minimize waste and abuse, limit availability of temporary facilities to essential and intended uses.

B. Maintenance: Maintain facilities in good operating condition until removal.
1. Maintain operation of temporary enclosures, heating, cooling, humidity control, ventilation, and similar facilities on a 24-hour basis where required to achieve indicated results and to avoid possibility of damage.

C. Temporary Facility Changeover: Do not change over from using temporary security and protection facilities to permanent facilities until Substantial Completion.

D. Termination and Removal: Remove each temporary facility when need for its service has ended, when it has been replaced by authorized use of a permanent facility, or no later than Substantial Completion. Complete or, if necessary, restore permanent construction that may have been delayed because of interference with temporary facility. Repair damaged Work, clean exposed surfaces, and replace construction that cannot be satisfactorily repaired.

1. Materials and facilities that constitute temporary facilities are property of Contractor.
2. Remove temporary paving not intended for or acceptable for integration into permanent paving. Where area is intended for landscape development, remove soil and aggregate fill that do not comply with requirements for fill or subsoil. Remove materials contaminated with road oil, asphalt and other petrochemical compounds, and other substances that might impair growth of plant materials or lawns. Repair or replace street paving, curbs, and sidewalks at temporary entrances, as required by authorities having jurisdiction.
3. At Substantial Completion, clean and renovate permanent facilities used during construction period. Comply with final cleaning requirements specified in Division 1 Section "Closeout Procedures."

END OF SECTION

SECTION 01571
TEMPORARY EROSION & SEDIMENT CONTROL

PART 1-GENERAL

1.1 SCOPE OF STANDARD

A. This standard provides general guidance concerning site storm water management.

B. The Owner recognizes that project conditions and requirements vary, thus precluding the absolute adherence to the items identified herein in all cases. However, unless there is adequate written justification, it is expected that these guidelines will govern the design and specifications for the Owner's projects.

1.2 RELATED STANDARDS (NOT USED)

1.3 REFERENCES

A. In order to minimize the discharge of pollutants to stormwater, permanent and temporary structural controls located at the Owner's sites shall be implemented in accordance with the Texas Commission on Environmental Quality (TCEQ), local water purveyor and the local drainage and environmental criteria.

B. TxDOT Standard Specification Item 506 – Temporary Erosion, Sedimentation, and Environmental Controls.

1.4 QUALITY CONTROL

Implementation of site controls shall be performed by a qualified contractor, experienced in the proper installation according to manufacturers' specifications, recognized Best Management Practices (BMP's), and the Texas Pollutant Discharge Elimination System (TPDES) regulations.

1.5 GENERAL REQUIREMENTS

A. Erosion/sedimentation controls

1. A detailed sequence of development showing which phases of construction will be done at which time and what specific controls are required during each phase of the development. The Contractor shall install erosion/sedimentation controls prior to any site preparation work (clearing, grubbing, or excavation).

2. Sequence of construction (typical):

   a. Install traffic control devices and signs.
   b. Install temporary erosion/sedimentation controls and tree protection as required.
   c. Install stabilized construction entrance/exit.

d. Construct all utilities services and fire protection and connect to the storm sewer, wastewater systems and site utilities for services.
e. Install gas service tap line and meter
f. Begin construction of building
g. Begin construction of pavement, drives etc.
h. Finish rough grading
i. Construct landscaping and irrigation
j. Re-establish all disturbed areas in accordance with notes and establish permanent erosion control

3. The contractor shall inspect the controls at least every 14 days and after every significant (0.5 inches or greater) rainfall event to insure they have not been substantially disturbed and that they are functioning properly.

4. Any sediment buildup occurring after a significant rain shall be removed and placed in the designated spoil disposal site.

5. Structural practices should be used to divert flows from exposed soils, store flow or otherwise limit runoff and the discharge of pollutants from exposed areas of the site to the degree attainable. Such practices may include silt fences, storm drain inlet protection, entrance site stabilization, gabions or others.

6. Location of temporary spoils areas, including size, time of use, and ultimate re-vegetation schedules must be indicated. Where construction is to occur in a channel which drains greater than five acres, a note shall be included on the plans specifying that "the contractor shall remove all spoil material from the channel of any creek or drainage way at the end of each work day".

7. Re-vegetation plans will be included for all disturbed areas on the site which include a clear definition of criteria to be utilized in determining when acceptable revegetation has taken place (minimum requirements are 95 percent coverage with no bare areas exceeding 16 square feet with a 1-1/2 inch stand of grass).

8. Plans will include the identity and phone number of the designated representative(s) of the contractor who will be responsible for the maintenance of erosion and sedimentation control being used on the project and who can authorize appropriate changes to the plan, if it is discovered to be inadequate.

PART 2 - PRODUCTS

A. TEMPORARY EROSION CONTROL

In all cases, the development of plans and specifications will give first consideration to erosion controls, as it is much easier to maintain soil cover than to trap sediment. The goal of the planned erosion control will be to divert runoff away from unstable areas or to provide a stable surface that will resist the effects of rain and runoff. All projects should utilize one or more of the following practices unless engineer ascertains that there is no chance of runoff entering the project from areas adjoining the site. The preferred erosion controls to be used at the New Facilities Building project include:

1. Interceptor swale - use as perimeter control, less than 5 acres only
2. Diversion dike – use to route runoff away from project site, less than 10 acres only
3. Pipe slope drain – transport runoff down steep, erodible slopes, less than 5 acres only
4. Outlet stabilization – prevent erosion at outlet of channel or conduit
5. Level spreader – outlet device for dikes and diversions
6. Subsurface drain – use to prevent soils from becoming saturated and prevent seeps
7. Tree protection – for erosion control and aesthetics
8. Temporary vegetation – RECOMMENDED - use for temporary stabilization of disturbed areas; for slopes steeper than 3:1 use in conjunction with matting
9. Blankets/matting – use in channels and on steep slopes
10. Mulch – use to stabilize newly seeded areas
11. Sod – use for immediate stabilization of channels, around inlets
12. Dust Control – use in areas subject to air movement of dust

B. TEMPORARY SEDIMENT CONTROL

Activities at most sites will result in soil disturbance. Erosion will occur in the disturbed areas and best management practices must be planned to contain and sediment transported by runoff. The preferred erosion controls to be used at the New Facilities Building project include:

1. Construction exit – use at all designated access points
2. Silt fence (interior) – useful in areas of minor sheet flow, use 100 ft. or more of fence for each ¼ acre
3. Silt fence (exterior) – use along down slope borders of site, use 100 ft. or more of fence for each ¼ acre
4. Triangular filter dikes – use for areas within site requiring frequent access (movable)
5. Hay bale dike – use in areas of minor sheet flow, use 100 ft. or more for each ¼ acre – Note: replace every 3 months
6. Rock berm – use for drainage swales and ditches within and below site, less than 5 acres
7. High service rock berm – use around sensitive features and in high flow areas within and below site, less than 5 acres
8. Brush berm – use in small areas of sheet flow, less than 2 acres
9. Sand bag berm – use for construction in streambeds, contributing drainage area 5 – 10 acres
10. Buffer (vegetative) strips – use on floodplains, next to wetlands, along stream banks, and on steep slopes
11. Inlet protection – prevent sediment from entering storm inlet, less than 1 acre
12. Sediment trap – use where flows are concentrated in a swale of channel, 1 - 5 acres
13. Sediment basin – use for larger disturbed areas, 5 – 100 acres

PART 3 - EXECUTION

Preferred construction details of selected best management practices follow:

EROSION CONTROLS

INTERCEPTOR SWALE

Interceptor swales are used to shorten the length of exposed slope by intercepting runoff and can also serve as perimeter swales preventing off-site runoff from entering the disturbed area or prevent sediment-laden runoff from leaving the construction site or disturbed area. They may have a v-shape or be trapezoidal with a flat bottom and side slopes of 3:1 or flatter. The outflow from a swale should be directed to a stabilized outlet or sediment-trapping device. The swales should remain in place until the disturbed area is permanently stabilized. A schematic of an interceptor swale is shown below.

Materials:

1. Stone stabilization should be used when grades exceed 2% or velocities exceed 6 feet per second and should consist of a layer of crushed stone three inches thick, riprap or high velocity erosion control mats.
2. Stabilization should extend across the bottom of the swale and up both sides of the channel to minimum height of three inches above the design water surface elevation based on a 2-year, 24-hour storm.

Installation:

1. An interceptor swale should be installed across exposed slopes during construction and should intercept no more than 5 acres of runoff.
2. All earth removed and not needed in construction should be disposed of in an approved spoils site so that it will not interfere with the functioning of the swale or contribute to siltation in other areas of the site.
3. Trees, brush, stumps, obstructions and other material should be removed and disposed of to avoid interference with proper functioning of the swale.
4. Should have a maximum depth of 1.5 feet with side slopes of 3:1 or flatter. Swale should have positive drainage for its entire length to an outlet.
5. When the slope exceeds 2 percent, or velocities exceed 6 feet per second (regardless of slope), stabilization is required. Stabilization should be crushed stone placed in a layer of at least 3 inches thick or may be high velocity erosion control matting. Check dams are also recommended to reduce velocities in the swales possibly reducing the amount of stabilization necessary.
6. Minimum compaction for the swale should be 90% standard proctor density.

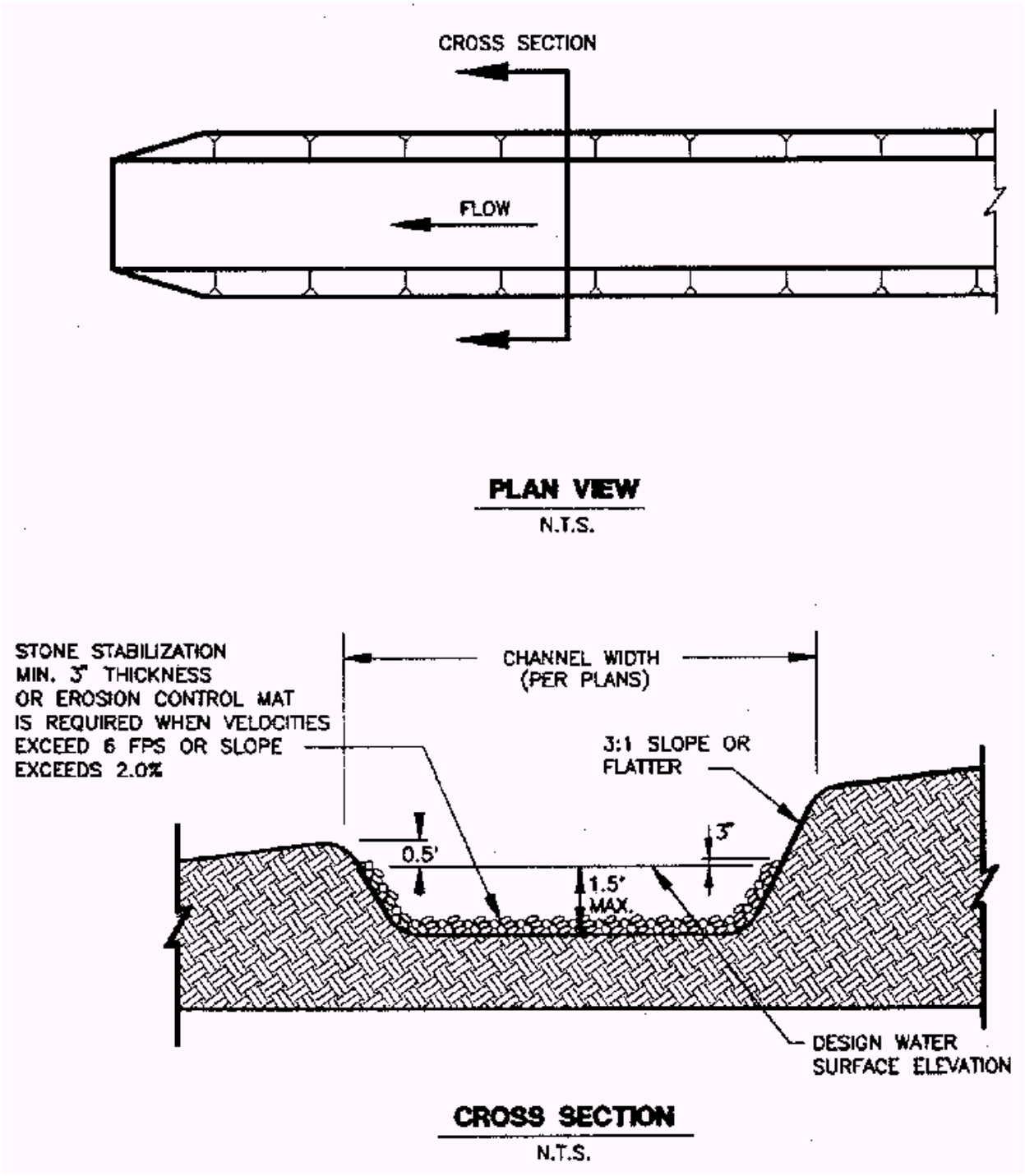

SCHEMATIC DIAGRAM OF AN INTERCEPTOR SWALE

INSPECTION AND MAINTENANCE GUIDELINES

1. Swales should be inspected weekly and after each rain event to locate and repair any damage to the channel or clear debris or other obstructions so as not to diminish flow capacity.
2. Damage from storms or normal construction activities such as tire ruts or disturbance of swale stabilization should be repaired as soon as practical.

DIVERSION DIKES

A temporary diversion dike is a barrier created by the placement of an earthen embankment to reroute the flow of runoff to an erosion control device or away from an open, easily erodible area. A diversion dike intercepts runoff from small upland areas and diverts it away from exposed slopes to a stabilized outlet, such as a rock berm, sandbag berm, or stone outlet structure. These controls can be used on the perimeter of the site to prevent runoff from entering the construction area. Dikes are generally used for the duration of construction to intercept and reroute runoff from disturbed areas to prevent excessive erosion until permanent drainage features are installed and/or slopes are stabilized. A schematic of a diversion dike is shown below.

Materials:

1. Stone stabilization (required for velocities in excess of 6 fps) should consist of riprap placed in a layer at least 3 inches thick and should extend a minimum height of 3 inches above the design water surface up the existing slope and the upstream face of the dike.
2. Geotextile fabric should be a non-woven polypropylene fabric designed specifically for use as a soil filtration media with an approximate weight of 6 oz./yd 2, a Mullen burst rating of 140 psi, and having an equivalent opening size (EOS) greater than a #50 sieve.

Installation:

1. Diversion dikes should be installed prior to and maintained for the duration of construction and should intercept no more than 10 acres of runoff.
2. Dikes should have a minimum top width of 2 feet and a minimum height of compacted fill of 18 inches measured from the top of the existing ground at the upslope toe to top of the dike and having side slopes of 3:1 or flatter.
3. The soil for the dike should be placed in lifts of 8 inches or less and be compacted to 95 % standard proctor density.
4. The channel, which is formed by the dike, must have positive drainage for its entire length to an outlet.
5. When the slope exceeds 2 percent, or velocities exceed 6 feet per second (regardless of slope), stabilization is required. Situations in which velocities do not exceed 6 feet per second, vegetation may be used to *control erosion.*

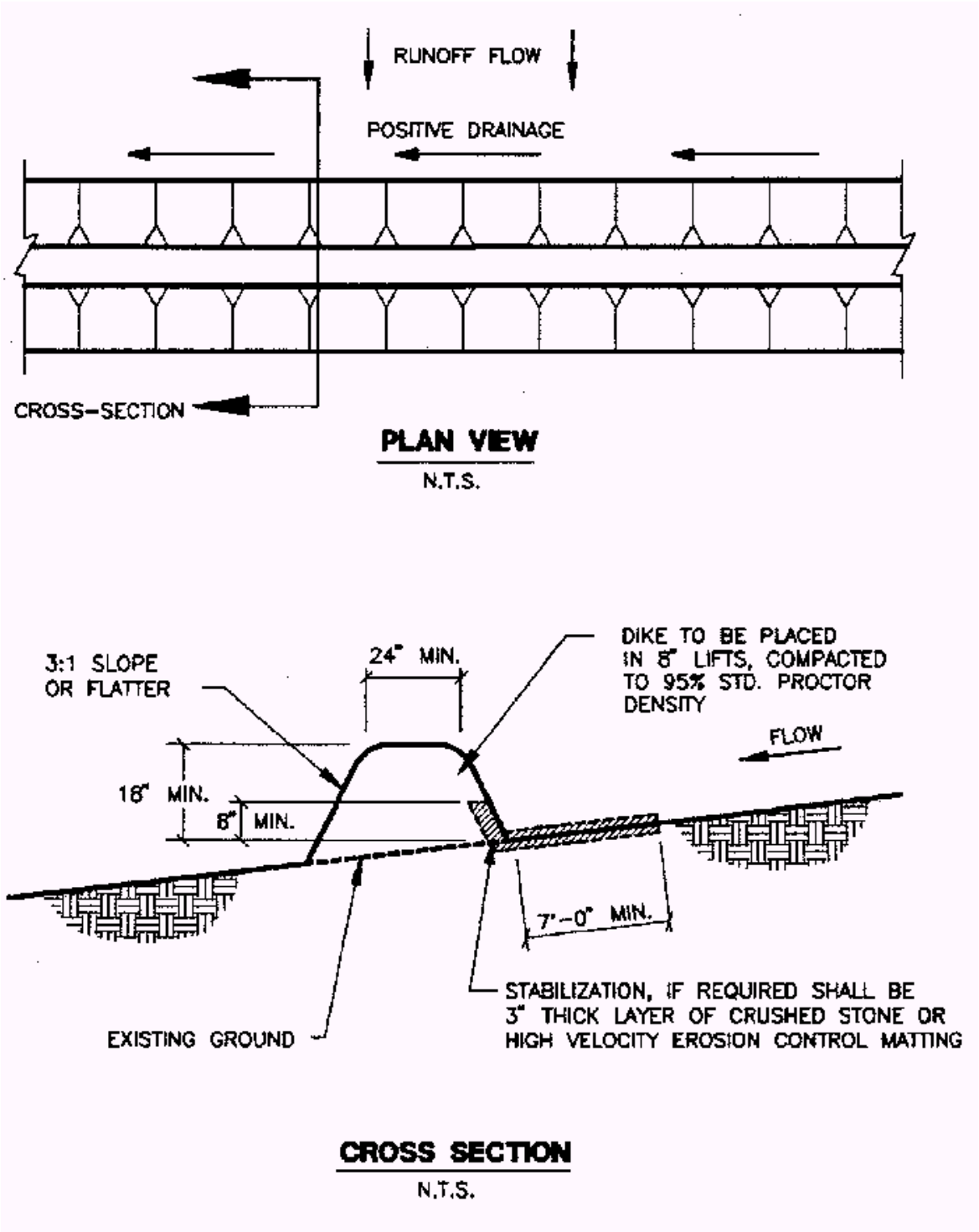

Schematic of a Diversion Dike (NCTCOG, 1993b)

INSPECTION AND MAINTENANCE GUIDELINES:

1. Swales should be inspected weekly and after each rain event to determine if silt is building up behind the dike or if erosion is occurring on the face of the dike. Locate and repair any damage to the channel or clear debris or other obstructions so as not to diminish flow capacity.
2. Silt should be removed in a timely manner.
3. If erosion is occurring on the face of the dike, the slopes of the face should either be stabilized through mulch or seeding or the slopes of the face should be reduced.
4. Damage from storms or normal construction activities such as tire ruts or disturbance of swale stabilization should be repaired as soon as practical.

SEDIMENTATION CONTROLS

TEMPORARY CONSTRUCTION ENTRANCE/EXIT

The purpose of a temporary construction entrance is to provide a stable entrance/exit condition from the construction site and keep mud and sediment off public roads. A stabilized construction entrance is a stabilized pad of crushed stone located at any point traffic will be entering or leaving the construction site from a public right-of-way, street, alley, sidewalk or parking area. The purpose of a stabilized construction entrance is to reduce or eliminate the tracking or flowing of sediment onto public rights-of-way. This practice should be used at all points of construction ingress and egress. Excessive amounts of mud can also present a safety hazard to roadway users. To minimize the amount of sediment loss to nearby roads, access to the construction site should be limited to as few points as possible and vegetation around the perimeter should be protected were access is not necessary. A rock stabilized construction entrance should

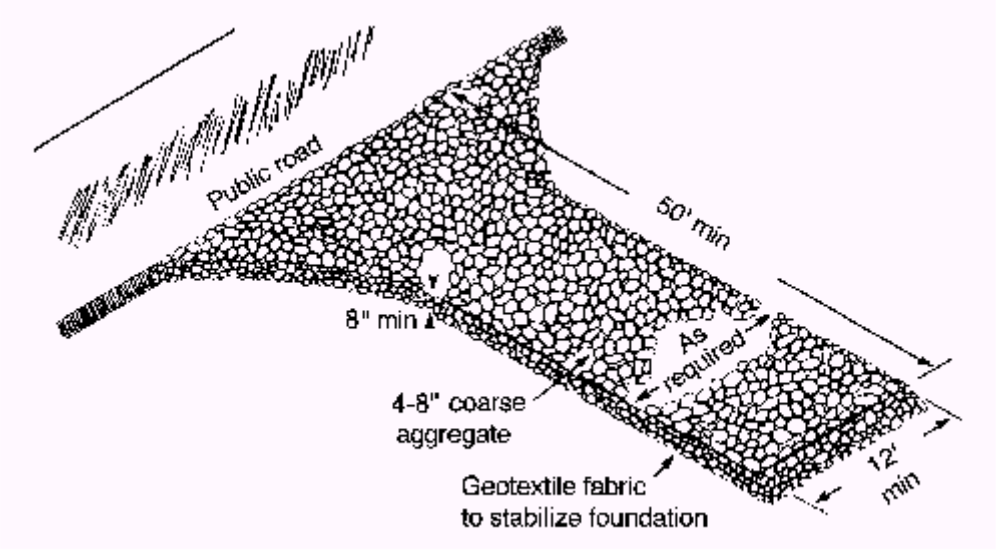

be used at all designated access points.

Schematic of Temporary Construction Entrance/Exit (after NC, 1993)

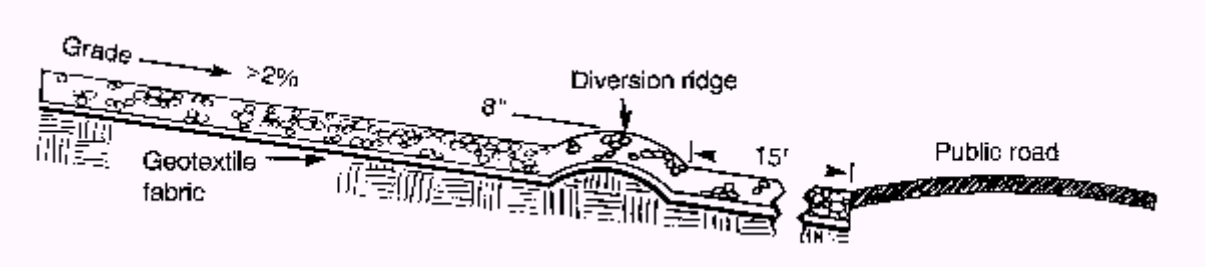

Cross-section of a Construction Entrance/Exit (NC, 1993)

Materials:

1. The aggregate should consist of 4 to 8 inch washed stone over a stable foundation as specified in the plan.
2. The aggregate should be placed with a minimum thickness of 8 inches.
3. The geotextile fabric should be designed specifically for use as a soil filtration media with an approximate weight of 6 oz/yd 2, a mullen burst rating of 140 lb/in 2, and an equivalent opening size greater than a number 50 sieve.
4. If a washing facility is required, a level area with a minimum of 4 inch washed stone or commercial rack should be included in the plans. Divert wastewater to a sediment trap or basin.

Installation:

1. Avoid curves on public roads and steep slopes. Remove vegetation and other objectionable material from the foundation area. Grade crown foundation for positive drainage.
2. The minimum width of the entrance/exit should be 12 feet or the full width of exit roadway, whichever is greater.
3. The construction entrance should be at least 50 feet long.
4. If the slope toward the road exceeds 2%, construct a ridge, 6 to 8 inches high with 3:1 (H:V) side slopes, across the foundation approximately 15 feet from the entrance to divert runoff away from the public road.
5. Place geotextile fabric and grade foundation to improve stability, especially where wet conditions are anticipated.
6. Place stone to dimensions and grade shown on plans. Leave surface smooth and slope for drainage.
7. Divert all surface runoff and drainage from the stone pad to a sediment trap or basin.
8. Install pipe under pad as needed to maintain proper public road drainage.

Common trouble points:

1. Inadequate runoff control – sediment washes onto public road.
2. Stone to small or geotextile fabric absent, results in muddy condition as stone is pressed into soil.
3. Pad too short for heavy construction traffic – extend pad beyond the minimum 50 foot length as necessary.

4. Pad not flared sufficiently at road surface, results in mud being tracked on to road and possible damage to road edge.
5. Unstable foundation – use geotextile fabric under pad and/or improve foundation drainage.

Inspection and Maintenance Guidelines:

1. The entrance should be maintained in a condition, which will prevent tracking or flowing of sediment onto public rights-of-way. This may require periodic top dressing with additional stone as conditions demand and repair and/or cleanout of any measures used to trap sediment.
2. All sediment spilled, dropped, washed or tracked on to public rights-of-way should be removed immediately by contractor.
3. When necessary, wheels should be cleaned to remove sediment prior to entrance onto public right-of-way.
4. When washing is required, it should be done on an area stabilized with crushed stone that drains into an approved sediment trap or sediment basin.
5. All sediment should be prevented from entering any storm drain, ditch or water course by using approved methods.

SILT FENCE

A silt fence is a barrier consisting of geotextile fabric supported by metal posts to prevent soil and sediment loss from a site. When properly used, silt fences can be highly effective at controlling sediment from disturbed areas. They cause runoff to pond, allowing heavier solids to settle out. If not properly installed, silt fences are not likely to be effective. A schematic illustration of a silt fence is shown below.

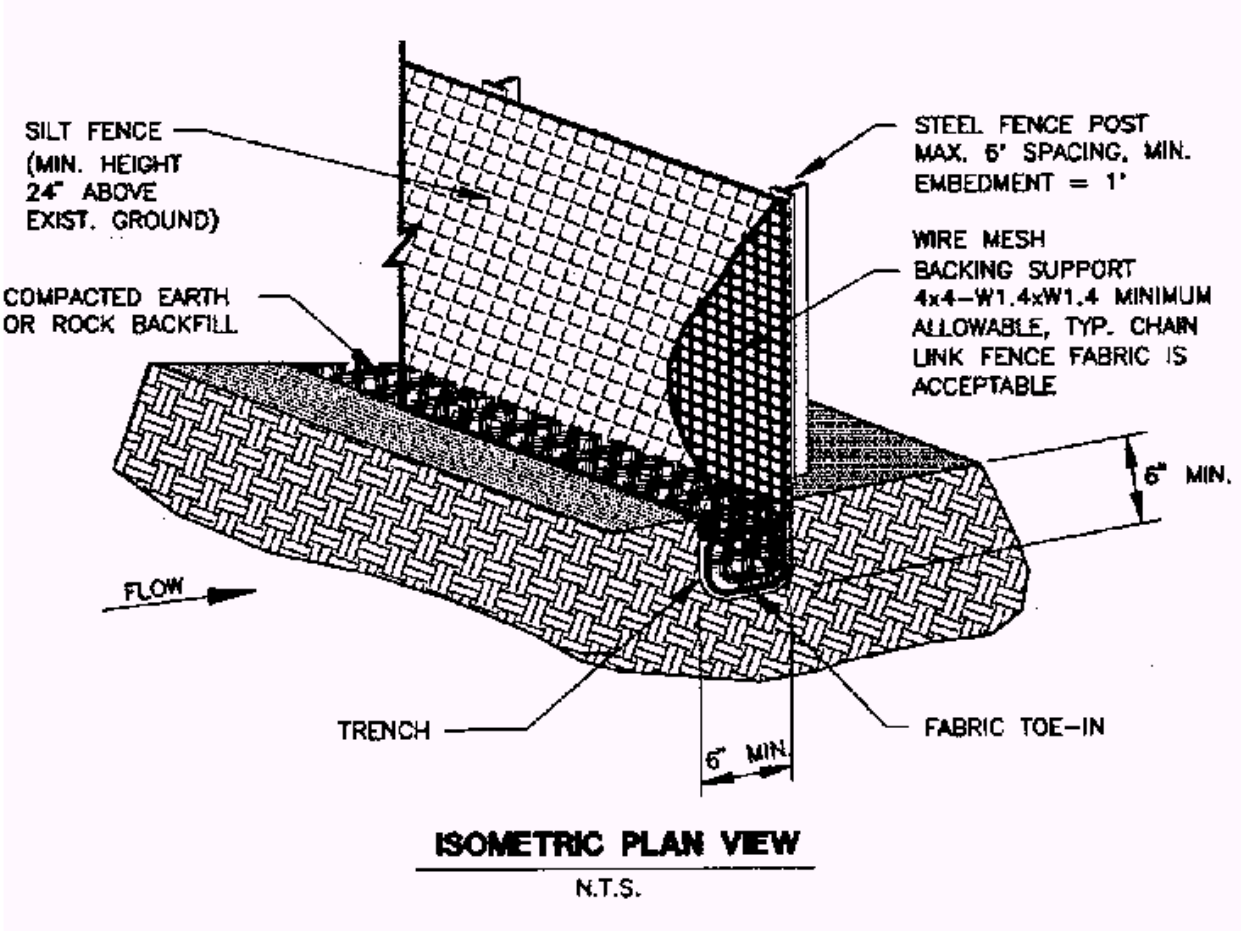

Schematic of a Silt Fence Installation (NCTCOG, 1993b)

The purpose of a silt fence is to intercept and detain water-borne sediment from unprotected areas of a limited extent. Silt fence is used during the period of construction near the perimeter of a disturbed area to intercept sediment while allowing water to percolate through. This fence should remain in place until the disturbed area is permanently stabilized. Silt fence should not be used where there is a concentration of water in a channel or drainage way. If concentrated flow occurs after installation, corrective action must be taken such as placing a rock berm in the areas of concentrated flow.

Silt fencing within the site may be temporarily moved during the day to allow construction activity provided it is replaced and properly anchored to the ground at the end of the day. Silt fences on the perimeter of the site or around drainage ways should not be moved at any time.

Materials:

1. Silt fence material should be polypropylene, polyethylene or polyamide woven or nonwoven fabric. The fabric width should be 36 inches, with a minimum unit

weight of 4.5 oz/yd, mullen burst strength exceeding 190 lb/in 2 , ultraviolet stability exceeding 70%, and minimum apparent opening size of U.S. Sieve No. 30.

2. Fence posts should be made of hot rolled steel, at least 4 feet long with Tee or Y-bar cross section, surface painted or galvanized, minimum nominal weight 1.25 lb/ft 2, and Brindell hardness exceeding 140.
3. Woven wire backing to support the fabric should be galvanized 2" x 4" welded wire, 12 gauge minimum.

Installation:

1. Steel posts, which support the silt fence, should be installed on a slight angle toward the anticipated runoff source. Post must be embedded a minimum of 1 foot deep and spaced not more than 8 feet on center. Where water concentrates, the maximum spacing should be 6 feet.
2. Lay out fencing down-slope of disturbed area, following the contour as closely as possible. The fence should be sited so that the maximum drainage area is ¼ acre/100 feet of fence.
3. The toe of the silt fence should be trenched in with a spade or mechanical trencher, so that the down-slope face of the trench is flat and perpendicular to the line of flow. Where fence cannot be trenched in (e.g., pavement or rock outcrop), weigh down fabric flap with 3 inches of pea gravel on uphill side to prevent flow from seeping under fence.
4. The trench must be a minimum of 6 inches deep and 6 inches wide to allow for the silt fence fabric to be laid in the ground and backfilled with compacted material.
5. Silt fence should be securely fastened to each steel support post or to woven wire, which is in turn attached to the steel fence post. There should be a 3-foot overlap, securely fastened where ends of fabric meet.
6. Silt fence should be removed when the site is completely stabilized so as not to block or impede storm flow or drainage.

Common Trouble Points:

1. Fence not installed along the contour causing water to concentrate and flow over the fence.
2. Fabric not seated securely to ground (runoff passing under fence)
3. Fence not installed perpendicular to flow line (runoff escaping around sides)
4. Fence treating too large an area, or excessive channel flow (runoff overtops or collapses fence)

Inspection and Maintenance Guidelines:

1. Inspect all fencing weekly, and after any rainfall.
2. Remove sediment when buildup reaches 6 inches, or install a second line of fencing parallel to the old fence.
3. Replace any torn fabric or install a second line of fencing parallel to the torn section.

4. Replace or repair any sections crushed or collapsed in the course of construction activity. If a section of fence is obstructing vehicular access, consider relocating it to a spot where it will provide equal protection, but will not obstruct vehicles. A triangular filter dike may be preferable to a silt fence at common vehicle access points.

TRIANGULAR SEDIMENT FILTER DIKES

The purpose of a triangular sediment filter dike, see diagram, is to intercept and detain water-borne sediment from unprotected areas of limited extent. The triangular sediment filter dike is used where there is no concentration of water in a channel or other drainage way above the barrier and the contributing drainage area is less than one acre. If the uphill slope above the dike exceeds 10%, the length of the slope above the dike should be less than 50 feet. If concentrated flow occurs after installation, corrective action should be taken such as placing rock berm in the areas of concentrated flow.
This measure is effective on paved areas where installation of silt fence is not possible or where vehicle access must be maintained. The advantage of these controls is the ease with which they can be moved to allow vehicle traffic, then reinstalled to maintain sediment control.

Materials:

1. Silt fence material should be polypropylene, polyethylene or polyamide woven or nonwoven fabric. The fabric width should be 36 inches, with a minimum unit weight of 4.5 oz/yd, mullen burst strength exceeding 190 lb/in 2 , ultraviolet stability exceeding 70%, and minimum apparent opening size of U.S. Sieve No. 30.
2. The dike structure should be 6 gauge 6” x 6” wire mesh folded into triangular form being eighteen (18) inches on each side.

Installation:

1. As shown in the diagram, the frame should be constructed of 6” x 6”, 6 gauge welded wire mesh, 18 inches per side, and wrapped with geotextile fabric the same composition as that used for silt fences.
2. Filter material should lap over ends six (6) inches to cover dike to dike junction; each junction should be secured by shoat rings.
3. Position dike parallel to the contours, with the end of each section closely abutting the adjacent sections.
4. There are several options for fastening the filter dike to the ground as shown in the diagram. The fabric skirt may be toed-in with 6 inches of compacted material, or 12 inches of the fabric skirt should extend uphill and be secured with a minimum of 3 inches of open graded rock, or with staples or nails. If these two options are not feasible the dike structure may be trenched in 4 inches.
5. Triangular sediment filter dikes should be installed across exposed slopes during construction with ends of the dike tied into existing grades to prevent failure and should intercept no more than one acre of runoff.
6. When moved to allow vehicular access, the dikes should be reinstalled as soon as possible, but always at the end of the workday.

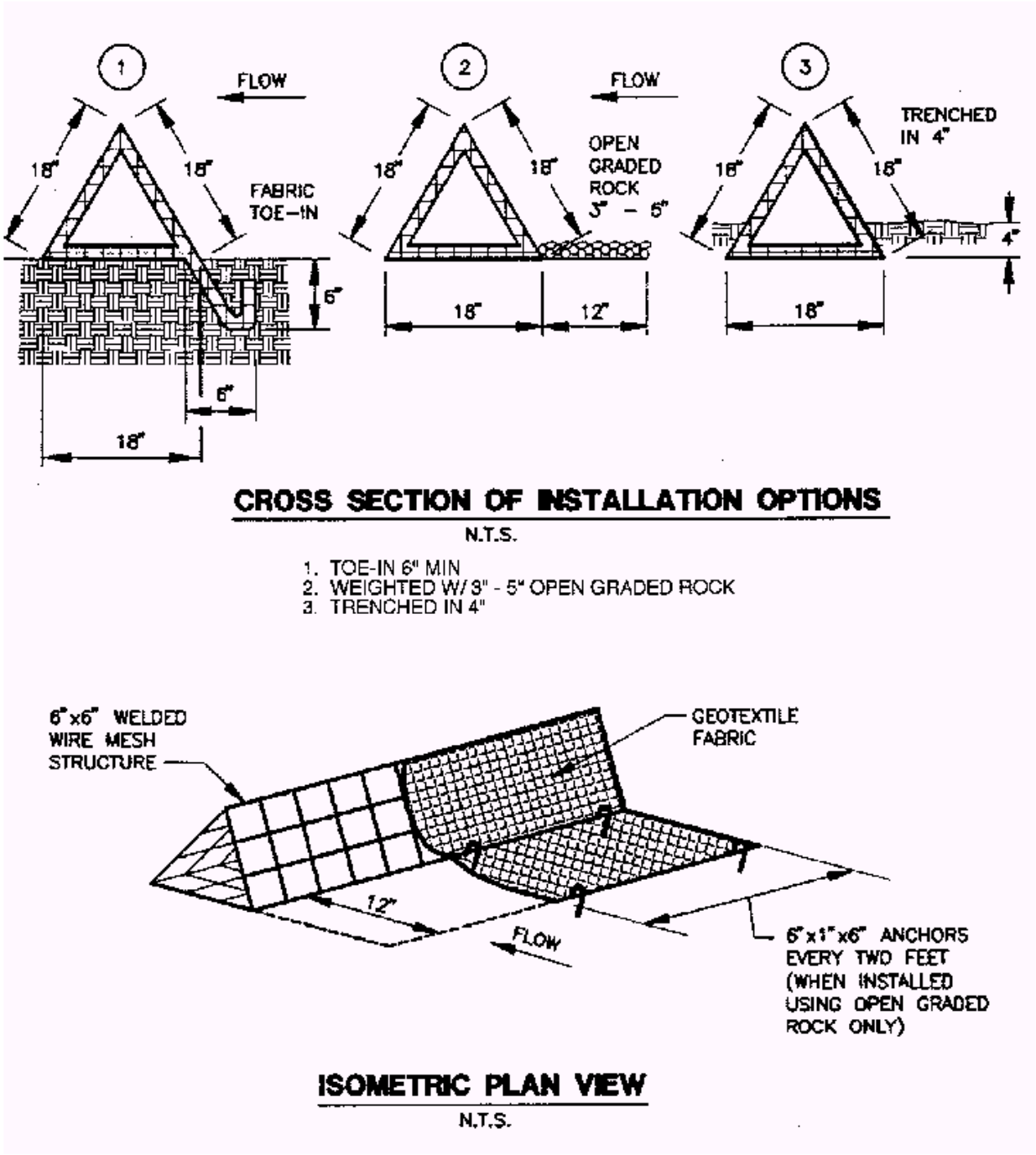

Schematic of a Triangular Filter Dike (NCTCOG, 1993)

END OF SECTION

SECTION 01600
PRODUCT REQUIREMENTS

PART 1 - GENERAL

1.1 RELATED DOCUMENTS

A. Drawings and general provisions of the Contract, including General and Supplementary Conditions and other Division 1 Specification Sections, apply to this Section.

1.2 SUMMARY

A. This Section includes administrative and procedural requirements for selection of products for use in Project; product delivery, storage, and handling; manufacturers' standard warranties on products; special warranties; product substitutions; and comparable products.

B. Related Sections include the following:
   1. Division 1 Section "References" for applicable industry standards for products specified
   2. Division 1 Section "Closeout Procedures" for submitting warranties for Contract closeout
   3. Divisions 2 through 16 Sections for specific requirements for warranties on products and installations specified to be warranted

1.3 DEFINITIONS

A. Products: Items purchased for incorporating into the Work, whether purchased for Project or taken from previously purchased stock. The term "product" includes the terms "material," "equipment," "system," and terms of similar intent.
   1. Named Products: Items identified by manufacturer's product name, including make or model number or other designation shown or listed in manufacturer's published product literature that is current as of date of the Contract Documents.
   2. New Products: Items that have not previously been incorporated into another project or facility, except that products consisting of recycled-content materials are allowed, unless explicitly stated otherwise. Products salvaged or recycled from other projects are not considered new products.
   3. Comparable Product: Product that is demonstrated and approved through submittal process, or where indicated as a product substitution, to have the indicated qualities related to type, function, dimension, in-service performance, physical properties, appearance, and other characteristics that equal or exceed those of specified product.

B. Substitutions: Changes in products, materials, equipment, and methods of construction from those required by the Contract Documents and proposed by Contractor.

C. Basis-of-Design Product Specification: Where a specific manufacturer's product is named and accompanied by the words "basis of design," including make or model number or other designation, to establish the significant qualities related to type, function, di-

mension, in-service performance, physical properties, appearance, and other characteristics for purposes of evaluating comparable products of other named manufacturers.

1.4 SUBMITTALS

A. Substitution Requests: Submit three copies of each request for consideration. Identify product or fabrication or installation method to be replaced. Include Specification Section number and title and Drawing numbers and titles.
   1. Substitution Request Form: Use form provided by Owner, reference Section 01630 Substitutions and Product Options.
   2. Documentation: Show compliance with requirements for substitutions and the following, as applicable:
      a. Statement indicating why specified material or product cannot be provided
      b. Coordination information, including a list of changes or modifications needed to other parts of the Work and to construction performed by Owner and separate Contractors, that will be necessary to accommodate proposed substitution
      c. Detailed comparison of significant qualities of proposed substitution with those of the Work specified. Significant qualities may include attributes such as performance, weight, size, durability, visual effect, and specific features and requirements indicated
      d. Product Data, including drawings and descriptions of products and fabrication and installation procedures
      e. Samples, where applicable or requested
      f. List of similar installations for completed projects with project names and addresses and names and addresses of architects and owners
      g. Material test reports from a qualified testing agency indicating and interpreting test results for compliance with requirements indicated
      h. Research/evaluation reports evidencing compliance with building code in effect for Project, from a model code organization acceptable to authorities having jurisdiction
      i. Detailed comparison of Contractor's Construction Schedule using proposed substitution with products specified for the Work, including effect on the overall Contract Time. If specified product or method of construction cannot be provided within the Contract Time, include letter from manufacturer, on manufacturer's letterhead, stating lack of availability or delays in delivery
      j. Cost information, including a proposal of change, if any, in the Contract Sum
      k. Contractor's certification that proposed substitution complies with requirements in the Contract Documents and is appropriate for applications indicated
      l. Contractor's waiver of rights to additional payment or time that may subsequently become necessary because of failure of proposed substitution to produce indicated results
   3. Architect's Action: If necessary, Architect will request additional information or documentation for evaluation within 7 days of receipt of a request for substitution. Architect will notify Contractor of acceptance or rejection of proposed substitution within 15 days of receipt of request, or 7 days of receipt of additional information or documentation, whichever is later.

a. Form of Acceptance: Change Order.
b. Use product specified if Architect cannot make a decision on use of a proposed substitution within time allocated.

B. Comparable Product Requests: Submit three copies of each request for consideration. Identify product or fabrication or installation method to be replaced. Include Specification Section number and title and Drawing numbers and titles.
1. Architect's Action: If necessary, Architect will request additional information or documentation for evaluation within one week of receipt of a comparable product request. Architect will notify Contractor of approval or rejection of proposed comparable product request within 15 days of receipt of request, or 7 days of receipt of additional information or documentation, whichever is later.
a. Form of Approval: As specified in Division 1 Section "Submittal Procedures."
b. Use product specified if Architect cannot make a decision on use of a comparable product request within time allocated.

C. Basis-of-Design Product Specification Submittal: Comply with requirements in Division 1 Section "Submittal Procedures." Show compliance with requirements.

1.5 QUALITY ASSURANCE

A. Compatibility of Options: If Contractor is given option of selecting between two or more products for use on Project, product selected shall be compatible with products previously selected, even if previously selected products were also options.

1.6 PRODUCT DELIVERY, STORAGE, AND HANDLING

A. Deliver, store, and handle products using means and methods that will prevent damage, deterioration, and loss, including theft. Comply with manufacturer's written instructions.

B. Delivery and Handling:
1. Schedule delivery to minimize long-term storage at Project site and to prevent overcrowding of construction spaces.
2. Coordinate delivery with installation time to ensure minimum holding time for items that are flammable, hazardous, easily damaged, or sensitive to deterioration, theft, and other losses.
3. Deliver products to Project site in an undamaged condition in manufacturer's original sealed container or other packaging system, complete with labels and instructions for handling, storing, unpacking, protecting, and installing.
4. Inspect products on delivery to ensure compliance with the Contract Documents and to ensure that products are undamaged and properly protected.

C. Storage:
1. Store products to allow for inspection and measurement of quantity or counting of units.
2. Store materials in a manner that will not endanger Project structure.
3. Store products that are subject to damage by the elements, under cover in a weathertight enclosure above ground, with ventilation adequate to prevent condensation.
4. Store cementitious products and materials on elevated platforms.

5. Store foam plastic from exposure to sunlight, except to extent necessary for period of installation and concealment.
6. Comply with product manufacturer's written instructions for temperature, humidity, ventilation, and weather-protection requirements for storage.
7. Protect stored products from damage and liquids from freezing.
8. Provide a secure location and enclosure at Project site for storage of materials and equipment by Owner's construction forces. Coordinate location with Owner.

1.7 PRODUCT WARRANTIES

A. Warranties specified in other Sections shall be in addition to, and run concurrent with, other warranties required by the Contract Documents. Manufacturer's disclaimers and limitations on product warranties do not relieve Contractor of obligations under requirements of the Contract Documents.
   1. Manufacturer's Warranty: Preprinted written warranty published by individual manufacturer for a particular product and specifically endorsed by manufacturer to Owner.
   2. Special Warranty: Written warranty required by or incorporated into the Contract Documents, either to extend time limit provided by manufacturer's warranty or to provide more rights for Owner.

B. Special Warranties: Prepare a written document that contains appropriate terms and identification, ready for execution. Submit a draft for approval before final execution.
   1. Manufacturer's Standard Form: Modified to include Project-specific information and properly executed.
   2. Refer to Divisions 2 through 16 Sections for specific content requirements and particular requirements for submitting special warranties.

C. Submittal Time: Comply with requirements in Division 1 Section "Closeout Procedures."

PART 2 - PRODUCTS

2.1 PRODUCT SELECTION PROCEDURES

A. General Product Requirements: Provide products that comply with the Contract Documents, that are undamaged and, unless otherwise indicated, that are new at time of installation.
   1. Provide products complete with accessories, trim, finish, fasteners, and other items needed for a complete installation and indicated use and effect.
   2. Standard Products: If available, and unless custom products or nonstandard options are specified, provide standard products of types that have been produced and used successfully in similar situations on other projects.
   3. Owner reserves the right to limit selection to products with warranties not in conflict with requirements of the Contract Documents.
   4. Where products are accompanied by the term "as selected," Architect will make selection.
   5. Where products are accompanied by the term "match sample," sample to be matched is Architect's.

6. Descriptive, performance, and reference standard requirements in the Specifications establish "salient characteristics" of products.
7. Or Equal: Where products are specified by name and accompanied by the term "or equal" or "or approved equal" or "or approved," comply with provisions in Part 2 "Comparable Products" Article to obtain approval for use of an unnamed product.

B. Product Selection Procedures:
1. Products: Where Specifications include a list of names of both products and manufacturers, provide one of the products listed that complies with requirements.
2. Manufacturers: Where Specifications include a list of manufacturers' names, provide a product by one of the manufacturers listed that complies with requirements.
3. Available Products: Where Specifications include a list of names of both products and manufacturers, provide one of the products listed, or an unnamed product, that complies with requirements. Comply with provisions in Part 2 "Comparable Products" Article for consideration of an unnamed product.
4. Available Manufacturers: Where Specifications include a list of manufacturers, provide a product by one of the manufacturers listed, or an unnamed manufacturer, that complies with requirements. Comply with provisions in Part 2 "Comparable Products" Article for consideration of an unnamed product.
5. Product Options: Where Specifications indicate that sizes, profiles, and dimensional requirements on Drawings are based on a specific product or system, provide the specified product or system. Comply with provisions in Part 2 "Product Substitutions" Article for consideration of an unnamed product or system.
6. Basis-of-Design Product: Where Specifications name a product and include a list of manufacturers, provide the specified product or a comparable product by one of the other named manufacturers. Drawings and Specifications indicate sizes, profiles, dimensions, and other characteristics that are based on the product named. Comply with provisions in Part 2 "Comparable Products" Article for consideration of an unnamed product by the other named manufacturers.
7. Visual Matching Specifications: Where Specifications include the phrase “as selected from manufacturer’s colors, patterns, textures” or a similar phrase, select a product (and manufacturer) that complies with other specified requirements.
    a. Standard Range: Where specifications include the phrase “standard range of colors, patterns, textures” or similar phrase, Architect will select color pattern, or texture from manufacturer’s product line that does not include premium items.
    b. Full Range: Where Specifications include the phrase “full range of colors, patterns, textures” or similar phrase, Architect will select color, pattern or texture form manufacturer’s product line that include both standard and premium items.

2.2 PRODUCT SUBSTITUTIONS

A. Reference Section 01630 – Substitutions and Product Options.

2.3 COMPARABLE PRODUCTS

A. Conditions: Architect will consider Contractor's request for comparable product when the following conditions are satisfied. If the following conditions are not satisfied, Architect will return requests without action, except to record noncompliance with these requirements:

1. Evidence that the proposed product does not require extensive revisions to the Contract Documents, that it is consistent with the Contract Documents and will produce the indicated results, and that it is compatible with other portions of the Work
2. Detailed comparison of significant qualities of proposed product with those named in the Specifications. Significant qualities include attributes such as performance, weight, size, durability, visual effect, and specific features and requirements indicated
3. Evidence that proposed product provides specified warranty
4. List of similar installations for completed projects with project names and addresses and names and addresses of architects and owners, if requested
5. Samples, if requested

PART 3 - EXECUTION (Not Used)

END OF SECTION

SECTION 01630
SUBSTITUTIONS AND PRODUCT OPTIONS

PART 1 - GENERAL

1.1 PRODUCT LIST

A. Within 30 days after date of Contract, submit to Architect 5 copies of complete list of products and materials which are proposed for installation.

B. Prepare list on basis of each Specification section.

C. For products specified under reference standards, include with listing of each product:
   1. Name and address of Manufacturer
   2. Trade name
   3. Model or catalog designation
   4. Manufacturer's data, including performance and test data, reference standards

1.2 CONTRACTOR'S OPTIONS

A. For products specified only by reference standards, select any product meeting standards, by any Manufacturer.

B. For products specified by naming several products or Manufacturers, select any product and Manufacturer named.

C. For products specified by naming only one product and Manufacturer, there is no option, unless a substitution is approved as specified below.

1.3 SUBSTITUTIONS

A. During Bidding, Architect will consider written requests from prime Bidders for substitutions, received at least 7 days prior to Bid Date; requests received after that time will not be considered. Approval of proposed substitutions will be set forth in an Addendum or letter of approval. Requests for substitutions shall include data listed below.

B. Within 30 days after date of Contract, Architect will consider formal requests from Contractor for substitutions of products in place of those specified. No request for substitutions will be considered after this date.

C. Submit 2 copies of request for substitution. Include in substitution:
   1. Data substantiating compliance of proposed substitution with Contract documents.
   2. For products:
      a. Product identification, including Manufacturer’s name and address
      b. Manufacturer’s literature, including product description, performance and test data and reference standards
      c. Samples, if applicable

d. Name and address of similar projects on which product was used and date of installation

3. For construction methods:
   a. Detailed written descriptions of proposed method
   b. Complete drawings illustrating methods or revisions
4. Itemized comparison of proposed substitution with product or method specified.
5. Data relating to changes in construction schedule.

D. In making request for substitution, Bidder/Contractor represents:
1. He has personally investigated proposed product or method and determined that it is equal or superior in all respects to that specified.
2. He will provide same guarantee for substitution as for product or method specified.
3. He will coordinate installation of accepted substitution into work, making such changes as may be required for work to be complete in all respects.
4. He waives all claims for additional costs related to substitution which subsequently becomes apparent.

E. Substitutions will not be considered if:
1. They are indicated or implied on show drawings or product data submittals without formal request as submitted in accordance with Article 1.03 of this Section.
2. Acceptance will require substantial revision of Contract Documents.

PART 2 - PRODUCTS

2.1 PRODUCT SUBSTITUTIONS

A. Timing: Architect will consider requests for substitution if received within 30 days after the Notice to Proceed. Requests received after that time may be considered or rejected at discretion of Architect.

B. Conditions: Architect will consider Contractor's request for substitution when the following conditions are satisfied. If the following conditions are not satisfied, Architect will return requests without action, except to record noncompliance with these requirements:
1. Requested substitution offers Owner a substantial advantage in cost, time, energy conservation, or other considerations, after deducting additional responsibilities Owner must assume. Owner's additional responsibilities may include compensation to Architect for redesign and evaluation services, increased cost of other construction by Owner, and similar considerations.
2. Requested substitution does not require extensive revisions to the Contract Documents.
3. Requested substitution is consistent with the Contract Documents and will produce indicated results.
4. Substitution request is fully documented and properly submitted.
5. Requested substitution will not adversely affect Contractor's Construction Schedule.

6. Requested substitution has received necessary approvals of authorities having jurisdiction.
7. Requested substitution is compatible with other portions of the Work.
8. Requested substitution has been coordinated with other portions of the Work.
9. Requested substitution provides specified warranty.

SUBSTITUTION REQUEST

PROJECT: _____ APW PROJECT NO.: _____

TO: Roel Bazan
MNT Division
150 E. Riverside Dr.
Austin, TX 78704

FROM (CONTRACTOR/BIDDER):
_____
_____

CONTRACTOR (BIDDER) HEREBY REQUESTS ACCEPTANCE OF THE FOLLOWING PRODUCT OR SYSTEMS AS A SUBSTITUTION IN ACCORD WITH PROVISIONS OF DIVISION ONE OF THE SPECIFICATIONS:

1. SPECIFIED PRODUCT OR SYSTEM:
   Substitution request for (Generic Description): _____

   Specification Section No.: _____ Article(s) _____ Paragraph (s) _____

2. SUPPORTING DATA:
   Product data for proposed substitution is attached (description of product, reference standards, performance and test data).

   Sample is attached Sample will be sent if requested

3. QUALITY COMPARISON:

	SPECIFIED PRODUCT	SUBSTITUTION
Name brand:	_____	_____
Catalog No.	_____	_____
Manufacturer:	_____	_____
Vendor:	_____	_____
Significant Variations:	_____	_____
	_____	_____

Maintenance Service Available: _____ Yes _____ No

Spare Part Source: _____

4. PREVIOUS INSTALLATIONS:
   Identification of similar projects on which proposed substitution was used:

   Project: _____ Architect: _____

   Address: _____ Owner: _____
   _____ Date Installed: _____
   _____

5. REASON FOR NOT GIVING PRIORITY TO SPECIFIED ITEMS:

   _____

   _____

6. EFFECT OF SUBSTITUTION:
   Proposed substitution affects other parts of Work: _____ No _____Yes (If yes, explain)

_____

_____

Substitution changes Contract Time: _____ No _____ Yes Add/Deduct _____days.

Substitution requires dimensional revision or redesign of structure or M & E Work:

_____ No _____ Yes (If yes, attach compete data)

Saving or credit to Owner, if any, for accepting substitution: $_____.

Extra cost to Owner, if any, for accepting substitution: $_____.

7. CONTRACTOR'S (BIDDER'S) STATEMENT OF CONFORMANCE OF PROPOSED SUBSTITUTION TO CONTRACT REQUIREMENT:

I/we have investigated the proposed substitution.

I/we:

___ believe that it is equal or superior in all respects to specified product, except as stated above.
___ will provide the same warranty as specified for specified product.
___ have included complete cost data and implications of the substitution.
___ will pay redesign and special inspection costs caused by the use of this product.
___ will pay additional costs to other contractors caused by the substitution.
___ will coordinate the incorporation of the proposed substitution in the Work.
____ will modify other parts of the work as may be needed, to make all parts of the work complete and functioning.
___ waive future claims for added cost to Contract caused by the substitution.

Contractor (Bidder): _____ Date: _____

By: _____.

Answer all questions and complete all blanks - use "N/A" if not applicable.

ARCHITECT REVIEW AND ACTION

___ Resubmit substitution request:

___ Provide more information in following categories.

_____

___ Sign Contractor's (Bidder's) Statement of Conformance.

___ Substitution accepted.

___ Substitution is accepted with the following comments.

_____

_____

___ Substitution not accepted.

___ Substitution Request received too late.

_____ _____
Roel Bazan, R.A. Date
TxDOT

END OF SECTION

SECTION 01700
EXECUTION REQUIREMENTS

PART 1 - GENERAL

1.1 SECTION INCLUDES

A. Installation

B. Owner-Installed Products

C. Progress Cleaning

D. Final cleaning

E. Starting of systems

F. Demonstration and instructions

G. Testing, adjusting and balancing

H. Protecting installed construction

I. Operation and maintenance data

J. Manual for materials and finishes

K. Manual for equipment and systems

L. Spare parts and maintenance products

M. Product warranties and product bonds

1.2 INSTALLATION

A. General: Locate the Work and components of the Work accurately, in correct alignment and elevation, as indicated.
   1. Make vertical work plumb and make horizontal work level.
   2. Where space is limited, install components to maximize space available for maintenance and ease of removal for replacement.
   3. Conceal pipes, ducts, and wiring in finished areas, unless otherwise indicated.
   4. Maintain minimum headroom clearance of 8 feet in spaces without a suspended ceiling.

B. Comply with Manufacturer's written instructions and recommendations for installing products in applications indicated.

C. Install products at the time and under conditions that will ensure the best possible results. Maintain conditions required for product performance until Substantial Completion.

D. Conduct construction operations so no part of the Work is subjected to damaging operations or loading in excess of that expected during normal conditions of occupancy.

E. Tools and Equipment: Do not use tools or equipment that produce harmful noise levels.

F. Templates: Obtain and distribute to the parties involved templates for work specified to be factory prepared and field installed. Check Shop Drawings of other work to confirm that adequate provisions are made for locating and installing products to comply with indicated requirements.

G. Anchors and Fasteners: Provide anchors and fasteners as required to anchor each component securely in place, accurately located and aligned with other portions of the Work.
   1. Mounting Heights: Where mounting heights are not indicated, mount components at heights directed by Architect.
   2. Allow for building movement, including thermal expansion and contraction.
   3. Coordinate installation of anchorages. Furnish setting drawings, templates, and directions for installing anchorages, including sleeves, concrete inserts, anchor bolts, and items with integral anchors, that are to be embedded in concrete or masonry. Deliver such items to Project site in time for installation.

H. Joints: Make joints of uniform width. Where joint locations in exposed work are not indicated, arrange joints for the best visual effect. Fit exposed connections together to form hairline joints.

I. Hazardous Materials: Use products, cleaners, and installation materials that are not considered hazardous.

1.3 OWNER-INSTALLED PRODUCTS

A. Site Access: Provide access to Project site for Owner's construction forces.

B. Coordination: Coordinate construction and operations of the Work with work performed by Owner's construction forces.
   1. Construction Schedule: Inform Owner of Contractor's preferred construction schedule for Owner's portion of the Work. Adjust construction schedule based on a mutually agreeable timetable. Notify Owner if changes to schedule are required due to differences in actual construction progress.
   2. Preinstallation Conferences: Include Owner's construction forces at preinstallation conferences covering portions of the Work that are to receive Owner's work. Attend preinstallation conferences conducted by Owner's construction forces if portions of the Work depend on Owner's construction.

1.4 PROGRESS CLEANING

A. General: Clean Project site and work areas daily, including common areas. Coordinate progress cleaning for joint-use areas where more than one installer has worked. Enforce requirements strictly. Dispose of materials lawfully.

1. Comply with requirements in NFPA 241 for removal of combustible waste materials and debris.
2. Do not hold materials more than 7 days during normal weather or 3 days if the temperature is expected to rise above 80 deg F.
3. Containerize hazardous and unsanitary waste materials separately from other waste. Mark containers appropriately and dispose of legally, according to regulations.

B. Site: Maintain Project site free of waste materials and debris.

C. Work Areas: Clean areas where work is in progress to the level of cleanliness necessary for proper execution of the Work.
1. Remove liquid spills promptly.
2. Where dust would impair proper execution of the Work, broom-clean or vacuum the entire work area, as appropriate.

D. Installed Work: Keep installed work clean. Clean installed surfaces according to written instructions of Manufacturer or fabricator of product installed, using only cleaning materials specifically recommended. If specific cleaning materials are not recommended, use cleaning materials that are not hazardous to health or property and that will not damage exposed surfaces.

E. Concealed Spaces: Remove debris from concealed spaces before enclosing the space.

F. Exposed Surfaces in Finished Areas: Clean exposed surfaces and protect as necessary to ensure freedom from damage and deterioration at time of Substantial Completion.

G. Waste Disposal: Burying or burning waste materials on-site will not be permitted. Washing waste materials down sewers or into waterways will not be permitted.

H. During handling and installation, clean and protect construction in progress and adjoining materials already in place. Apply protective covering where required to ensure protection from damage or deterioration at Substantial Completion.

I. Clean and provide maintenance on completed construction as frequently as necessary through the remainder of the construction period. Adjust and lubricate operable components to ensure operability without damaging effects.

J. Limiting Exposures: Supervise construction operations to assure that no part of the construction, completed or in progress, is subject to harmful, dangerous, damaging, or otherwise deleterious exposure during the construction period.

1.5 FINAL CLEANING

A. Execute final cleaning prior to final project assessment.

B. General: Provide final cleaning. Conduct cleaning and waste-removal operations to comply with local laws and ordinances and Federal and local environmental and antipollution regulations.

C. Cleaning: Employ experienced workers or professional cleaners for final cleaning. Clean each surface or unit to condition expected in an average commercial building cleaning and maintenance program. Comply with Manufacturer's written instructions.

1. Complete the following cleaning operations before requesting inspection for certification of Final Completion for entire Project or for a portion of Project:
    a. Clean Project site, yard, and grounds, in areas disturbed by construction activities, including landscape development areas, of rubbish, waste material, litter, and other foreign substances.
    b. Sweep paved areas broom clean. Remove petrochemical spills, stains, and other foreign deposits.
    c. Rake grounds that are neither planted nor paved to a smooth, even-textured surface.
    d. Remove tools, construction equipment, machinery, and surplus material from Project site.
    e. Remove snow and ice to provide safe access to building.
    f. Clean exposed exterior and interior hard-surfaced finishes to a dirt-free condition, free of stains, films, and similar foreign substances. Avoid disturbing natural weathering of exterior surfaces. Restore reflective surfaces to their original condition.
    g. Remove debris and surface dust from limited access spaces, including roofs, plenums, shafts, trenches, equipment vaults, manholes, attics, and similar spaces.
    h. Sweep concrete floors broom clean in unoccupied spaces.
    i. Vacuum carpet and similar soft surfaces, removing debris and excess nap; shampoo if visible soil or stains remain.
    j. Clean transparent materials, including mirrors and glass in doors and windows. Remove glazing compounds and other noticeable, vision-obscuring materials. Replace chipped or broken glass and other damaged transparent materials. Polish mirrors and glass, taking care not to scratch surfaces.
    k. Remove labels that are not permanent.
    l. Touch up and otherwise repair and restore marred, exposed finishes and surfaces. Replace finishes and surfaces that cannot be satisfactorily repaired or restored or that already show evidence of repair or restoration.
        1) Do not paint over "UL" and similar labels, including mechanical and electrical nameplates.
    m. Wipe surfaces of mechanical and electrical equipment and similar equipment. Remove excess lubrication, paint and mortar droppings, and other foreign substances.
    n. Replace parts subject to unusual operating conditions.
    o. Clean plumbing fixtures to a sanitary condition, free of stains, including stains resulting from water exposure.
    p. Replace disposable air filters and clean permanent air filters. Clean exposed surfaces of diffusers, registers, and grills.
    q. Clean ducts, blowers, and coils if units were operated without filters during construction.

r. Clean light fixtures, lamps, globes, and reflectors to function with full efficiency. Replace burned-out bulbs, and those noticeably dimmed by hours of use, and defective and noisy starters in fluorescent and mercury vapor fixtures to comply with requirements for new fixtures.

s. Leave Project clean and ready for occupancy.

D. Comply with safety standards for cleaning. Do not burn waste materials. Do not bury debris or excess materials on Owner's property. Do not discharge volatile, harmful, or dangerous materials into drainage systems. Remove waste materials from Project site and dispose of lawfully.

1.6 STARTING OF SYSTEMS

A. Coordinate schedule for start-up of various equipment and systems.

B. Notify Architect/Engineer and Owner 14 days prior to start-up of each item.

C. Verify each piece of equipment or system has been checked for proper lubrication, drive rotation, belt tension, control sequence, and for conditions which may cause damage.

D. Verify tests, meter readings, and specified electrical characteristics agree with those required by equipment or system Manufacturer.

E. Verify wiring and support components for equipment are complete and tested.

F. Execute start-up under supervision of applicable Manufacturer's representative and Contractors' personnel in accordance with Manufacturers' instructions.

G. Submit a written report in accordance with Section 01300 that equipment or system has been properly installed and is functioning correctly.

1.7 DEMONSTRATION AND INSTRUCTIONS

A. Demonstrate operation and maintenance of products to Owner's personnel two weeks prior to date of Substantial Completion.

B. Demonstrate Project equipment and instructed by qualified representative who is knowledgeable about the Project.

C. For equipment or systems requiring seasonal operation, perform demonstration for other season within six months.

D. Utilize operation and maintenance manuals as basis for instruction. Review contents of manual with Owner's personnel in detail to explain all aspects of operation and maintenance.

E. Demonstrate start-up, operation, control, adjustment, trouble-shooting, servicing, maintenance, and shutdown of each item of equipment at agreed time, at equipment location.

F. Prepare and insert additional data in operations and maintenance manuals when need for additional data becomes apparent during instruction.

G. Required instruction time for each item of equipment and system is specified in individual sections.

1.8 TESTING, ADJUSTING AND BALANCING

A. Refer to Mechanical and Electrical Specifications for specific requirements.
   1. Reports will be submitted by independent firm to Architect/Engineer indicating observations and results of tests and indicating compliance or non-compliance with requirements of Contract Documents.

B. Adjust Door Hardware for proper operation and ADA compliance.

C. Refer to Division 1 through Division 16 for specific requirements.

1.9 PROTECTING INSTALLED CONSTRUCTION

A. Comply with Manufacturer's written instructions for temperature and relative humidity.

B. Protect installed Work and provide special protection where specified in individual specification sections.

C. Provide temporary and removable protection for installed products. Control activity in immediate work area to prevent damage.

D. Provide protective coverings at walls, projections, jambs, sills, and soffits of openings.

E. Protect finished floors, stairs, and other surfaces from traffic, dirt, wear, damage, or movement of heavy objects, by protecting with durable sheet materials.

F. Prohibit traffic or storage upon waterproofed or roofed surfaces. When traffic or activity is necessary, obtain recommendations for protection from waterproofing or roofing material Manufacturer.

G. Prohibit traffic from landscaped areas.

1.10 PROJECT RECORD DOCUMENTS

A. Maintain on site one set of the following record documents; record actual revisions to the Work:
   1. Drawings
   2. Specifications
   3. Addenda
   4. Change Orders and other modifications to the Contract
   5. Reviewed Shop Drawings, Product Data, and Samples
   6. Manufacturer's instruction for assembly, installation, and adjusting
   7. Manufacturer's certificates

8. Reviewed submittals

B. Ensure entries are complete and accurate, enabling future reference by Owner.

C. Store record documents separate from documents used for construction.

D. Label and file Record Documents in accordance with Section number listings in Table of Contents of this Project Specifications Manual. Label each document "PROJECT RECORD" in neat, large, printed letters.

E. Record information concurrent with construction progress, not less than weekly.

F. Specifications: Legibly mark and record at each product section description of actual products installed, including the following: Provide felt tip marking pens, maintaining separate colors for each major system, for recording information.
1. Manufacturer's name and product model and number
2. Product substitutions or alternates utilized
3. Changes made by Addenda and modifications

G. Record Drawings and Shop Drawings: Legibly mark each item to record actual construction including:
1. Measured depths of foundations in relation to finish floor datum
2. Measured horizontal and vertical locations of underground utilities and appurtenances, referenced to permanent surface improvements
3. Measured locations of internal utilities and appurtenances concealed in construction, referenced to visible and accessible features of the Work
4. Field changes of dimension and detail
5. Details not on original Contract drawings
6. Changes made by Addenda and modifications
7. Details not on original Contract Drawings
8. References to related shop drawings and Modifications

H. Submit documents to Architect/Engineer with claim for final Application for Payment.
1. At Contract closeout, deliver to Owner:
   a. Two copies of:
      1) Record drawings
      2) Record specifications manual

I. Transmit with cover letter in duplicate, listing:
1. Date
2. Project title and number
3. Contractor's name, address, and telephone number
4. Number and title of each Record Document
5. Signature of Contractor or authorized representative

1.11 OPERATION AND MAINTENANCE DATA

A. Submit documents to Architect/Engineer with claim for final Application for Payment.
1. At Contract closeout, deliver to Owner:

a. Two copies of:
   1) Operations and maintenance manuals for all mechanical equipment
   2) All warranties
   3) Reviewed submittals bound together in 3-ring notebooks

B. Submit data bound in 8-1/2 x 11 inch text pages, three D side ring binders with durable plastic covers.

C. Prepare binder cover with printed title "OPERATION AND MAINTENANCE INSTRUCTIONS", title of project, and subject matter of binder when multiple binders are required.

D. Internally subdivide binder contents with permanent page dividers, logically organized as described below; with tab titling clearly printed under reinforced laminated plastic tabs.

E. Drawings: Provide with reinforced punched binder tab. Bind in with text; fold larger drawings to size of text pages.

F. Contents: Prepare Table of Contents for each volume, with each product or system description identified, typed on white paper, in three parts as follows:
   1. Part 1: Directory, listing names, addresses, and telephone numbers of Architect/Engineer, Contractor, Subcontractors, and major equipment Suppliers.
   2. Part 2: Operation and maintenance instructions, arranged by system and subdivided by specification section. For each category, identify names, addresses, and telephone numbers of Subcontractors and Suppliers. Identify the following:
      a. Significant design criteria
      b. List of equipment
      c. Parts list for each component
      d. Operating instructions
      e. Maintenance instructions for equipment and systems
      f. Maintenance instructions for special finishes, including recommended cleaning methods and materials, and special precautions identifying detrimental agents
   3. Part 3: Project documents and certificates, including the following:
      a. Shop drawings and product data
      b. Air and water balance reports
      c. Certificates
      d. Originals of warranties and bonds

1.12 MANUAL FOR MATERIALS AND FINISHES

A. Submit two copies of preliminary draft or proposed formats and outlines of contents before start of Work. Architect/Engineer will review draft and return one copy with comments.

B. For equipment, or component parts of equipment put into service during construction and operated by Owner, submit documents within ten days after acceptance.

C. Submit one copy of completed volumes 15 days prior to final inspection. Draft copy be reviewed and returned, with Architect/Engineer comments. Revise content of document sets as required prior to final submission.

D. Submit two sets of revised final volumes in final form within 10 days after final inspection.

E. Building Products, Applied Materials, and Finishes: Include product data, with catalog number, size, composition, and color and texture designations. Include information for re-ordering custom manufactured products.

F. Instructions for Care and Maintenance: Include Manufacturer's recommendations for cleaning agents and methods, precautions against detrimental agents and methods, and recommended schedule for cleaning and maintenance.

G. Moisture Protection and Weather Exposed Products: Include product data listing applicable reference standards, chemical composition, and details of installation. Include recommendations for inspections, maintenance, and repair.

H. Additional Requirements: As specified in individual product specification sections.

I. Include listing in Table of Contents for design data, with tabbed fly sheet and space for insertion of data.

1.13 MANUAL FOR EQUIPMENT AND SYSTEMS

A. Submit two copies of preliminary draft or proposed formats and outlines of contents before start of Work. Architect/Engineer will review draft and return one copy with comments.

B. For equipment, or component parts of equipment put into service during construction and operated by Owner, submit documents within ten days after acceptance.

C. Submit one copy of completed volumes 15 days prior to final inspection. Draft copy be reviewed and returned after final inspection, with Architect/Engineer comments. Revise content of document sets as required prior to final submission.

D. Submit two sets of revised final volumes in final form within 10 days after final inspection.

E. Each Item of Equipment and Each System: Include description of unit or system, and component parts. Identify function, normal operating characteristics, and limiting conditions. Include performance curves, with engineering data and tests, and complete nomenclature and model number of replaceable parts.

F. Panelboard Circuit Directories: Provide electrical service characteristics, controls, and communications; typed.

G. Include color coded wiring diagrams as installed.

H. Operating Procedures: Include start-up, break-in, and routine normal operating instructions and sequences. Include regulation, control, stopping, shut-down, and emergency instructions. Include summer, winter, and special operating instructions.

I. Maintenance Requirements: Include routine procedures and guide for preventative maintenance and trouble shooting; disassembly, repair, and reassembly instructions; and alignment, adjusting, balancing, and checking instructions.

J. Include servicing and lubrication schedule, and list of lubricants required.

K. Include Manufacturer's printed operation and maintenance instructions.

L. Include sequence of operation by controls Manufacturer.

M. Include original Manufacturer's parts list, illustrations, assembly drawings, and diagrams required for maintenance.

N. Include control diagrams by controls Manufacturer as installed.

O. Include Contractor's coordination drawings, with color coded piping diagrams as installed.

P. Include charts of valve tag numbers, with location and function of each valve, keyed to flow and control diagrams.

Q. Include list of original Manufacturer's spare parts, current prices, and recommended quantities to be maintained in storage.

R. Include test and balancing reports as specified in Section 01400.

S. Additional Requirements: As specified in individual product specification sections.

T. Include listing in Table of Contents for design data, with tabbed dividers and space for insertion of data.

1.14 SPARE PARTS AND MAINTENANCE PRODUCTS

A. Furnish spare parts, maintenance, and extra products in quantities specified in individual specification sections.

B. Deliver to Project site and place in location as directed by Owner; obtain receipt prior to final payment.

1.15 PRODUCT WARRANTIES AND PRODUCT BONDS

A. Obtain warranties and bonds executed in duplicate by responsible Subcontractors, Suppliers, and Manufacturers, within ten days after completion of applicable item of work.

B. Execute and assemble transferable warranty documents and bonds from Subcontractors, Suppliers, and Manufacturers.

C. Verify documents are in proper form, contain full information, and are notarized.

D. Co-execute submittals when required.

E. Include Table of Contents and assemble in three D side ring binder with durable plastic cover.

F. Submit prior to final Application for Payment.

G. Time Of Submittals:
   1. For equipment or component parts of equipment put into service during construction with Owner's permission, submit documents within ten days after acceptance.
   2. Make other submittals within ten days after Date of Substantial Completion, prior to final Application for Payment.
   3. For items of Work for which acceptance is delayed beyond Date of Substantial Completion, submit within ten days after acceptance, listing date of acceptance as beginning of warranty or bond period.

PART 2 - PRODUCTS

2.1 CLEANING AGENTS

A. Use cleaning materials and agents recommended by Manufacturer or fabricator of the surface to be cleaned. Do not use cleaning agents that are potentially hazardous to health or property or that might damage finished surfaces.

PART 3 - EXECUTION (Not Used)

END OF SECTION

SECTION 01710
PROJECT CLOSEOUT

PART 1 - GENERAL

1.1 SECTION INCLUDES

A. Closeout procedures

B. Final cleaning

C. Starting of systems

D. Demonstration and instructions

E. Testing, adjusting and balancing

F. Protecting installed construction

1.2 SUBSTANTIAL COMPLETION: Substantial Completion is defined as essentially 99.9% complete with only cosmetic touch-ups left to be done.

A. Documents required for Substantial Completion:
1. Project record documents
2. Operation and maintenance data
3. Manual for materials and finishes
4. Manual for equipment and systems
5. Spare parts and maintenance products
6. Product warranties and product bonds
7. Maintenance service

B. Submit written certification that Contract Documents have been reviewed, Work has been inspected, and that Work is complete in accordance with Contract Documents and ready for Architect/Engineer's review.

C. Provide submittals to Architect/Engineer required by authorities having jurisdiction.

1.3 FINAL CLEANING

A. Execute final cleaning prior at Substantial Completion.

B. Clean interior and exterior glass, surfaces exposed to view; remove temporary labels, stains and foreign substances, polish transparent and glossy surfaces, vacuum carpeted and soft surfaces.

C. Clean equipment and fixtures to sanitary condition with cleaning materials appropriate to surface and material being cleaned.

D. Replace filters of operating equipment.

E. Clean debris from roofs, gutters, downspouts, and drainage systems.

F. Clean site; sweep paved areas, rake clean landscaped surfaces.

G. Remove waste and surplus materials, rubbish, and construction facilities from site.

1.4 STARTING OF SYSTEMS

A. Coordinate schedule for start-up of various equipment and systems.

B. Notify Architect/Engineer seven days prior to start-up of each item.

C. Verify each piece of equipment or system has been checked for proper lubrication, drive rotation, belt tension, control sequence, and for conditions which may cause damage.

D. Verify tests, meter readings, and specified electrical characteristics agree with those required by equipment or system Manufacturer.

E. Verify wiring and support components for equipment are complete and tested.

F. Execute start-up under supervision of applicable Manufacturer's representative and Contractors' personnel in accordance with Manufacturers' instructions.

G. When specified in individual specification Sections, require Manufacturer to provide authorized representative to be present at site to inspect, check, and approve equipment or system installation prior to start-up, and to supervise placing equipment or system in operation.

H. Submit a written report in accordance with Section 01330 that equipment or system has been properly installed and is functioning correctly.

1.5 DEMONSTRATION AND INSTRUCTIONS

A. Demonstrate operation and maintenance of products using a video recording device for future reference to Owner's personnel two weeks prior to date of Substantial Completion.

B. Demonstrate Project equipment and instruct in classroom environment using a video recording device for future reference located at the site and instructed by qualified Manufacturer's representative who is knowledgeable about the Project.

C. For equipment or systems requiring seasonal operation, perform demonstration for other season within six months.

D. Utilize operation and maintenance manuals as basis for instruction. Review contents of manual with Owner's personnel in detail to explain all aspects of operation and maintenance.

E. Demonstrate start-up, operation, control, adjustment, trouble-shooting, servicing, maintenance, and shutdown of each item of equipment at agreed time at equipment designated location.

F. Prepare and insert additional data in operations and maintenance manuals when need for additional data becomes apparent during instruction.

G. Required instruction time for each item of equipment and system is specified in individual sections.

1.6 TESTING, ADJUSTING AND BALANCING

A. Independent firm will perform services specified in Division 15 and other Sections.

B. Reports will be submitted by independent firm to Architect/Engineer indicating observations and results of tests and indicating compliance or non-compliance with requirements of Contract Documents.

1.7 PROTECTING INSTALLED CONSTRUCTION

A. Protect installed Work and provide special protection where specified in individual specification sections.

B. Provide temporary and removable protection for installed products. Control activity in immediate work area to prevent damage.

C. Provide protective coverings at walls, projections, jambs, sills, and soffits of openings.

D. Protect finished floors, stairs, and other surfaces from traffic, dirt, wear, damage, or movement of heavy objects, by protecting with durable sheet materials.

E. Prohibit traffic or storage upon waterproofed or roofed surfaces. When traffic or activity is necessary, obtain recommendations for protection from waterproofing or roofing material Manufacturer.

F. Prohibit traffic from landscaped areas.

1.8 PROJECT RECORD DOCUMENTS

A. Maintain on site one set of the following record documents; record actual revisions to the Work:
   1. Drawings
   2. Specifications
   3. Addenda
   4. Change Orders and other modifications to the Contract
   5. Reviewed Shop Drawings, Product Data, and Samples
   6. Manufacturer's instruction for assembly, installation, and adjusting

B. Ensure entries are complete and accurate, enabling future reference by Owner.

C. Store record documents separate from documents used for construction.

D. Record information concurrent with construction progress, not less than weekly.

E. Specifications: Legibly mark and record at each product section description of actual products installed, including the following:
   1. Manufacturer's name and product model and number
   2. Product substitutions or alternates utilized
   3. Changes made by Addenda and modifications

F. Record Drawings: Legibly mark each item to record actual construction including:
   1. Measured depths of foundations in relation to finish main floor datum
   2. Measured horizontal and vertical locations of underground utilities and appurtenances, referenced to permanent surface improvements
   3. Measured locations of internal utilities and appurtenances concealed in construction, referenced to visible and accessible features of the Work
   4. Field changes of dimension and detail
   5. Details not on original Contract drawings

G. Submit documents to Architect/Engineer.

1.9 OPERATION AND MAINTENANCE DATA

A. Submit **three copies** of data bound in 8-1/2 x 11 inch (A4) text pages, three D side ring capacity expansion binders with durable plastic covers at Substantial Completion.

B. Prepare binder cover with printed title "OPERATION AND MAINTENANCE INSTRUCTIONS", title of project, and subject matter of binder when multiple binders are required.

C. Internally subdivide binder contents with permanent page dividers, logically organized as described below; with tab titling clearly printed under reinforced laminated plastic tabs.

D. Drawings: Provide with reinforced punched binder tab. Bind in with text; fold larger drawings to size of text pages.

E. Contents: Prepare Table of Contents for each volume, with each product or system description identified, typed on white paper, in three parts as follows:
   1. Part 1: Directory, listing names, addresses, and telephone numbers of Architect/Engineer, Contractor, Subcontractors, and major equipment Suppliers.
   2. Part 2: Operation and maintenance instructions, arranged by system and subdivided by specification section. For each category, identify names, addresses, and telephone numbers of Subcontractors and Suppliers. Identify the following:
      a. Significant design criteria
      b. List of equipment
      c. Parts list for each component
      d. Operating instructions
      e. Maintenance instructions for equipment and systems
      f. Maintenance instructions for special finishes, including recommended cleaning methods and materials, and special precautions identifying detrimental agents
   3. Part 3: Project documents and certificates, including the following:
      a. Shop drawings and product data

b. Air and water balance reports
c. Certificates
d. Originals of warranties and bonds

1.10 MANUAL FOR MATERIALS AND FINISHES

A. Submit two copies of preliminary draft or proposed formats and outlines of contents before start of Work. Architect/Engineer will review draft and return one copy with comments.

B. Building Products, Applied Materials, and Finishes: Include product data, with catalog number, size, composition, and color and texture designations. Include information for re-ordering custom manufactured products.

C. Instructions for Care and Maintenance: Include Manufacturer's recommendations for cleaning agents and methods, precautions against detrimental agents and methods, and recommended schedule for cleaning and maintenance.

D. Moisture Protection and Weather Exposed Products: Include product data listing applicable reference standards, chemical composition, and details of installation. Include recommendations for inspections, maintenance, and repair.

E. Additional Requirements: As specified in individual product specification sections.

F. Include listing in Table of Contents for design data, with tabbed fly sheet and space for insertion of data.

1.11 MANUAL FOR EQUIPMENT AND SYSTEMS

A. Submit two copies of preliminary draft or proposed formats and outlines of contents before start of Work. Architect/Engineer will review draft and return one copy with comments.

B. For equipment, or component parts of equipment put into service during construction and operated by Owner, submit documents within ten days after acceptance of equipment by Owner.

C. Each Item of Equipment and Each System: Include description of unit or system, and component parts. Identify function, normal operating characteristics, and limiting conditions. Include performance curves, with engineering data and tests, and complete nomenclature and model number of replaceable parts.

D. Operating Procedures: Include start-up, break-in, and routine normal operating instructions and sequences. Include regulation, control, stopping, shut-down, and emergency instructions. Include summer, winter, and special operating instructions.

E. Additional Requirements: As specified in individual product specification sections.

F. Include listing in Table of Contents for design data, with tabbed dividers and space for insertion of data.

1.12 SPARE PARTS AND MAINTENANCE PRODUCTS

A. Furnish spare parts, maintenance, and extra products in quantities specified in individual specification sections.

B. Deliver to Owner at Substantial Completion.

1.13 PRODUCT WARRANTIES AND PRODUCT BONDS

A. Obtain warranties and bonds executed in duplicate by responsible Subcontractors, Suppliers, and Manufacturers, at Substantial Completion.

B. Execute and assemble transferable warranty documents and bonds from Subcontractors, Suppliers, and Manufacturers.

C. Verify documents are in proper form, contain full information, and are notarized.

D. Co-execute submittals when required.

E. Include Table of Contents and assemble in three D side ring binder with durable plastic cover. Three copies required.

F. Submit at Substantial Completion.

G. Time of Submittals:
   1. For equipment or component parts of equipment put into service during construction with Owner's permission, submit documents within ten days after Owner acceptance.
   2. Other submittals at Substantial Completion.

1.14 MAINTENANCE SERVICE

A. Furnish service and maintenance of components indicated in specification sections for one year from date of Substantial Completion.

B. Examine system components at frequency consistent with reliable operation. Clean, adjust, and lubricate as required.

C. Include systematic examination, adjustment, and lubrication of components. Repair or replace parts whenever required. Use parts produced by Manufacturer of original component.

D. Do not assign or transfer maintenance service to agent or Subcontractor without prior written consent of Owner and Engineer.

PART 2 - PRODUCTS (Not Used)

PART 3 - EXECUTION (Not Used)

END OF SECTION

SECTION 02100
SITE CLEARING

PART 1 - GENERAL

1.1 RELATED DOCUMENTS

A. Drawings and general provisions of the Contract, including General and Supplementary Conditions and Division 1 Specification Sections, apply to this Section.

1.2 SUMMARY ITEM 100. Property Site Clearing and Preparing Right Of Way

A. The Contractor shall not begin any clearing operations before the resident Engineer has established and defined the trees and areas of vegetation that shall not be removed or disturbed by construction activities.

Prior to preparing Right of Way, those existing trees, shrubs or other landscape features designated by the Engineer for preservation and pruning as directed by the Engineer shall be protected to the satisfaction of the Engineer. This protection work shall be considered subsidiary to this Item.

B. This Section includes the following:
1. Protecting existing trees and vegetation to remain
2. Removing trees and other vegetation
3. Clearing and grubbing
4. Topsoil stripping

C. C. Related Sections include the following:
1. Division 1 Section "Construction Facilities and Temporary Controls" for temporary utilities, temporary construction and support facilities, temporary security and protection facilities, and environmental protection measures during site operations
2. Division 2 Section "Earthwork" for soil materials, excavating, backfilling, and site grading

1.3 DEFINITIONS

A. Topsoil: Natural or cultivated surface-soil layer containing organic matter and sand, silt, and clay particles; friable, pervious, and black or a darker shade of brown, gray, or red than underlying subsoil; reasonably free of subsoil, clay lumps, gravel, and other objects more than 2 inches (50 mm) in diameter; and free of weeds, roots, and other deleterious materials.

1.4 MATERIALS OWNERSHIP

A. Except for materials indicated to be stockpiled or to remain Owner's property, cleared materials shall become Contractor's property and shall be removed from the site.

1.5 SUBMITTALS (None Required)

1.6 PROJECT CONDITIONS

A. Traffic: Minimize interference with adjoining roads, streets, walks, and other adjacent occupied or used facilities during site-clearing operations.

B. Do not close or obstruct streets, walks, or other adjacent occupied or used facilities without permission from Owner and authorities having jurisdiction.
   1. Provide alternate routes around closed or obstructed traffic ways if required by authorities having jurisdiction.

B. Improvements on Adjoining Property: Authority for performing indicated removal and alteration work on property adjoining Owner's property will be obtained by Owner before award of Contract.

C. Notify utility locator service for area where Project is located before site clearing.

PART 2 - PRODUCTS

Acceptable fencing material for tree protection shall be "Fence It Plus", 46"h x 150', new orange color, as manufactured by
Weathashade
3000 W. Orange Ave.
Apopka, Florida, 32703
(407) 889-3692
or approved equal. All trees to be preserved are not necessarily shown on the plans.

PART 3 - EXECUTION

3.1 PREPARATION

A. Protect and maintain benchmarks and survey control points from disturbance during construction.

B. Provide erosion-control measures to prevent soil erosion and discharge of soil-bearing water runoff or airborne dust to adjacent properties and walkways.

C. Locate and clearly flag trees and vegetation to remain or to be relocated.

D. Protect existing site improvements to remain from damage during construction.
   1. Restore damaged improvements to their original condition, as acceptable to Owner.

3.2 TREE PROTECTION

A. Erect and maintain a temporary fence around drip line of individual trees or around perimeter drip line of groups of trees to remain. Remove fence when construction is complete.

B. Do not store construction materials, debris, or excavated material within drip line of remaining trees.
   1. Do not permit vehicles, equipment, or foot traffic within drip line of remaining trees.

C. Do not excavate within drip line of trees, unless otherwise indicated.

D. Repair or replace trees and vegetation indicated to remain that are damaged by construction operations, in a manner approved by Architect.
   1. Employ a qualified arborist, licensed in jurisdiction where Project is located, to submit details of proposed repairs and to repair damage to trees and shrubs.
   2. Replace trees that cannot be repaired and restored to full-growth status, as determined by the qualified arborist.

E. Protect existing trees in the following manner:
   1. Install protective measures to protect tree trunk and root zones as shown in the plans.
      a. Install a protective fence around the perimeter of the drip line.
      b. Strap boards around tree trunks.
      c. Cover ground area below canopies with 3 to 4 inches of coarse, shredded or chipped mulch.
   2. Do not allow vehicles, equipment, stockpiled materials, trash containers, portable toilets, temporary structures, or storage under tree canopies.
   3. Do not operate or clean machinery, tools, or equipment under tree canopies.
   4. Do not discard any paints, solvents, fuels, chemicals, or other contaminated substances that might cause injury to the root systems.
   5. Do not dig or trench below tree canopies.

3.3 CLEARING AND GRUBBING

A. Remove obstructions, trees, shrubs, grass, and other vegetation to permit installation of new construction. Removal includes digging out stumps and obstructions and grubbing roots.

B. Do not remove trees, shrubs, and other vegetation indicated to remain or to be relocated.
   1. Cut minor roots and branches of trees indicated to remain in a clean and careful manner where such roots and branches obstruct installation of new construction.
   2. Completely remove stumps, roots, obstructions, and debris extending to a depth of 18 inches (450 mm) below exposed subgrade.
   3. Use only hand methods for grubbing within drip line of remaining trees.

C. Fill depressions caused by clearing and grubbing operations with satisfactory soil material, unless further excavation or earthwork is indicated.
   1. Place fill material in horizontal layers not exceeding 8-inch (200-mm) loose depth, and compact each layer to a density equal to adjacent original ground.

3.4 TOPSOIL STRIPPING

A. Remove sod and grass before stripping topsoil.

B. Strip topsoil to whatever depths are encountered in a manner to prevent intermingling with underlying subsoil or other waste materials.
   1. Strip surface soil of unsuitable topsoil, including trash, debris, weeds, roots, and other waste materials.

C. Stockpile topsoil materials away from edge of excavations without intermixing with subsoil. Grade and shape stockpiles to drain surface water. Cover to prevent windblown dust.
   1. Limit height of topsoil stockpiles to 72 inches (1800 mm).
   2. Do not stockpile topsoil within drip line of remaining trees.
   3. Stockpile surplus topsoil and allow for re-spreading deeper topsoil.
   4. Topsoil will be re-spread on site at direction of Engineer.

3.5 DISPOSAL

A. Disposal: Remove surplus soil material, unsuitable topsoil, obstructions, demolished materials, and waste materials, including trash and debris, and legally dispose of them off Owner's property.

END OF SECTION

SECTION 02120
SELECTIVE SITE DEMOLITION

PART 1 - GENERAL

1.1 SUMMARY

A. Provide all material, equipment and labor necessary to demolish and remove from the site those items noted on the drawings

1.2 REFERENCES

1. TxDOT Standard Specification Item 104 – Removing Concrete
2. TxDOT Standard Specification Item 505 – Removing Stabilized Base & Asphalt Pavement
3. TxDOT Standard Specification Item 305 – Salvaging, Hauling, & Stockpiling Reclaimable Asphalt Pavement

1.3 INDUSTRY STANDARDS

A. Related Work includes but is not limited to the following:

1. OSHA Regulations.

1.4 DESIGN REQUIREMENTS

A. Existing utilities are to remain in place and operational until all utility relocations as shown on the plans have been constructed, inspected and approved by the Owner.

B. Abandoned existing utilities which may be shown on the plans do not have to be removed from the site unless they conflict with new improvements. If the existing utilities are to remain in place pressure grout those utilities remaining and located under new improvements in accordance with, as a minimum, City of San Antonio Standards and Specifications.

1.5 BURNING

A. The use of burning at the site for the disposal of materials, or as a method of demolition, will not be permitted.

B. The accumulation of combustible debris in large quantities in one location will not be permitted. Remove combustible material from the site on a daily basis.

C. Do not allow combustible materials to accumulate which could result in an accidental fire.

1.6 EXPLOSIVES

A. The use of explosives in any form for any purpose on this site is prohibited.

1.7 HAZARDOUS CONDITIONS

A. Exercise care to avoid leaving hazardous conditions on the site at the end of a work day. If unavoidable, erect appropriate barricades, signs and take other necessary precautions to protect the public and passersby from these hazardous areas.

B. Large accumulations of rubble which may shift shall be avoided.

C. Remove rubble on a daily basis.

1.8 CODES AND ORDINANCES

A. Comply with all codes regarding demolition activities and disposal of materials. This shall include local, state and federal regulations as each jurisdiction is applicable.

PART 2 – PRODUCTS (NOT USED)

PART 3 - EXECUTION

3.1 SURFACE FEATURES

A. The Contractor is to install all erosion and sedimentation control features per the plans prior to any demolition activities.

B. All existing surface features shown or not shown on the plans that exist and are in conflict with proposed new improvements shall be demolished prior to any other demolition activities. Demolition shall be coordinated with the Owner.

3.2 UTILITIES

A. Site Preparation for coordination and protection requirements of existing utilities that are to remain active during construction.

B. Notify Utility Owners' Representative to turn off affected utility services that are to be abandoned no less than 48 hours prior to starting demolition.

C. Only the underground utility appurtenances (i.e. manholes, water meters, boxes, etc.) present at the surface shall be removed unless utility pipes and/or conduit are uncovered during excavation for buildings and other site improvements.

D. Utility connections at the utility appurtenances shall be disconnected and capped and plugged with a minimum of six inches (6") of concrete completely around the utility connection.

E. Wherever existing piping insulation is disturbed or removed, or new insulation is added, provide “asbestos free” self-adhesive on the outside of the final jacketing.

1. Signs shall have minimum ¾" high white lettering on blue background, equal to W.H. Brady Co., catalog #90293.

3.3 DUST CONTROL

A. Sprinkle debris, and use temporary enclosures as necessary to limit dust to the lowest practicable level.

B. Do not use water to an extent that may cause flooding, contaminated runoff, or icing.

3.4 DISPOSAL

A. All materials noted to be removed and disposed of becomes the property of the Contractor. All material shall be disposed of off-site in a legal manner. The Contractor shall include in his work the careful transporting of debris so that no mud, dirt, gravel, lumber, nails, concrete or any other material is allowed to fall on public property or any other property other than the destination to which the removed materials are legally being transported. In the event some materials fall on public property or other property the Contractor shall be responsible for damage caused and clean-up costs.

3.5 BACKFILLING

A. Backfill to existing ground level, foundation level of new construction, finish grades as shown on the drawings of subgrade elevation of new improvements.

B. Backfill material and compaction shall conform to Section 31 23 00.

C. Demolition debris as a backfill material shall not be used.

3.6 SALVAGE

A. Equipment and materials, including piping within the limits of demolition, unless otherwise specified, will become the property of the Contractor.

END OF SECTION

SECTION 02200
EARTHWORK

PART 1 - GENERAL

1.1 SCOPE: Provide complete earthwork including general excavation and excavation for structure; footing excavation; rough grading; fill and backfill and finish grading.

1.2 SAMPLES: Submit samples of materials as required below. Samples of earth materials shall be delivered to job site in sufficient quantity necessary for testing laboratory to adequately investigate soil.

1.3 BASIS FOR BIDS: Materials at site are expected to be in accordance with materials indicated on logs and test holes included. Bids shall be based on excavating and filling with materials encountered at site except where special fill or backfill materials are specified herein or indicated on Drawings. No allowance or extra payments will be made by reason of variation in types of soil encountered or variations in their moisture contents. Additional fill material required shall be furnished and included as a part of the work. Removal of excess or objectionable materials shall be included as a part of the work.

1.4 COORDINATION: Coordinate excavation work with other trades for proper scheduling of work.

PART 2 - PRODUCTS

2.1 STOCKPILING: Material cut from building areas which is suitable for backfilling may be stored on site to be distributed later. Fill material required to be hauled in may be stockpiled at site until used, provided it is properly handled to prevent contamination with undesirable materials. Location of stockpiles shall be subject to approval of Architect. Stockpile topsoil separate from excavated sub-soil.

2.2 SURPLUS MATERIALS: Excavated materials not to be used in fills and backfills on this project shall be removed from site immediately. Materials containing rubbish, debris or rocks shall be removed.

2.3 MATERIALS

A. General Fill: Suitable existing excavated on-site dark brown clay soil free from vegetable matter, debris and other deleterious matter, unless otherwise noted

B. Select Fill: Beneath building shall consist of an inactive inert material having a maximum plasticity index (PI) of 4-15. Submit samples for approval, complete with lab analysis of fill if requested by Architect.

C. Top Soil: Clean natural top soil free of vegetation, debris and other deleterious matter. Upper 6" of topsoil stripped may be used.

D. Backfill: Suitable existing excavated on site soil free from deleterious matter, unless noted otherwise.

E. Backfill: (Walls and retaining walls): Granular, free draining, cohesionless soil. Submit samples and lab analysis for approval.

F. Sub-Soil Drainage Pipe Backfill: Washed pea gravel, well graded, 1/4" to 1/2" size, free of clay lumps, shale, or other materials which might disintegrate. Submit samples for approval.

G. Gravel Cushion under Walks and Concrete Paving Area: Select crushed gravel ranging from 1/4` to 1" in size shall be thoroughly wetted and compacted before concrete is placed.

PART 3 - EXECUTION

3.1 ROUGH GRADING: Excavation and rough grading shall be made to lines and grades shown. Planting and Lawn areas shall be over cut to allow a layer of topsoil not less that 6" thick. Excavations shall be maintained to drain and shall be kept free of excess water. Ponding of water on site will not be permitted. Remove objectionable and excess materials from site when excavated.

3.2 STRUCTURAL EXCAVATION

A. Locate and mark all existing underground utilities and services before beginning structural excavation.

B. Provide excavation for structures and footings, as required for construction, bracing and removal of forms. Bottom of excavating shall be reasonable level. Maintain excavations in as near their natural moisture condition as possible.

3.3 SUB-SOIL DRAINAGE EXCAVATION: Excavate or trench as required for sub-soil drainage pipes. Trenches shall be sized and sloped as detailed.

3.4 EXCAVATION BENEATH SLABS: Beneath slabs on grades, excavate and remove light brown and black clay and silty clay soil.

3.5 FILLING (OUTSIDE STRUCTURE): Roughen and loosen filled areas before placing of fill material. Spread suitable fill material in uniform layers over area not to exceed 6" thick compaction. Wet and work materials as required for proper compaction and thoroughly mix. Compaction shall be by tamping rollers or by utilizing excavation equipment to spread and compact fill to a uniform density equal to natural density of material before excavating. Areas adjacent to building, or where compacting equipment cannot work, shall be compacted with approved tampers. Compact filled areas to lines and grades shown, with allowances for a final layer of topsoil at least 6" thick in lawn areas.

END OF SECTION

SECTION 02210
GEOTECHNICAL DATA

PART 1 - GENERAL

1.1 INVESTIGATION

A. Soil and Subsurface Investigations were conducted at the Site, the results of which are to be found in the report.. This Section 02210 Geotechnical Data is included for reference only.

B. Plan of Borings and Log of Borings are attached.

C. A copy of the full report is available at the Architect's office for review.

D. Bidders are urged to review the report, examine soils investigation data, and to make their own investigation of the site before bidding.

PART 2 - PRODUCTS (Not Used)

PART 3 - EXECUTION (Not Used)

END OF SECTION

GEOTECHNICAL ENGINEERING REPORT

TXDOT MAINTENANCE BUILDING
SANTA ROSA AVENUE (SH 107)
EDCOUCH, TEXAS

TERRACON PROJECT NO. 88095012
March 11, 2009

Prepared for:

JASTER-QUINTANILLA SAN ANTONIO, LLP
SAN ANTONIO, TEXAS

Prepared by:

Terracon Consultants Inc.
Pharr, Texas

March 11, 2009

Terracon

Consulting Engineers & Scientists

Terracon Consultants, Inc.
1506 Mid-Cities Drive
Pharr, Texas 78577
Phone 956.283.8254
Fax 956.283.8279
www.terracon.com

Mr. Erlath W. Zuehl III, P.E.
Jaster-Quintanilla San Antonio, LLP
125 West Sunset, Suite 100
San Antonio, Texas 78209

Re: Geotechnical Engineering Report
TxDOT Maintenance Building
Santa Rosa Avenue (SH 107)
Edcouch, Texas
Terracon Project No. 88095012

Dear Mr. Zuehl:

Enclosed is our Geotechnical Engineering Report for the proposed Maintenance Building in Edcouch, Texas. We trust that this report is responsive to your project needs. Please contact us if you have any questions or if we can be of further assistance.

We appreciate the opportunity to work with you on this project and look forward to providing additional geotechnical engineering and construction materials testing services in the future.

Sincerely,
Terracon Consultants, Inc.
(Firm Registration: TX F3272)

Maria O. Scurry, P.E.
Project Manager
Geotechnical Engineering Division

Alfonso A. Soto, P.E.
Principal

Copies Submitted: (3) Jaster-Quintanilla San Antonio, LLP; Mr. Erlath Zuehl III, P.E.

TABLE OF CONTENTS

INTRODUCTION **1**

PROJECT DESCRIPTION **1**

SITE EXPLORATION PROCEDURES **1**
- **Field Exploration** **1**
- **Laboratory Testing** **2**
- **Sample Disposal** **2**

SITE CONDITIONS **2**

SUBSURFACE CONDITIONS **3**
- **Area Geology** **3**
- **Soil Conditions** **3**
- **Groundwater Conditions** **4**

ENGINEERING RECOMMENDATIONS **5**
- **Geotechnical Considerations** **5**
- **Foundation System** **5**
- **Site preparation** **6**
- **Slab Foundation** **6**
- **Slab Foundation Construction** **8**
- **Spread Footings** **8**
- **Spread Footing Foundation Construction** **9**
  - Foundation Construction Monitoring 9
- **Pavement Construction** **9**
- **Earthwork** **13**
  - Use of Concrete, Concrete Block, and Brick Demolition Debris for Engineered Fill 14
  - Wet Weather Considerations 15
- **Drainage** **15**
- **Existing Trees** **15**

GENERAL COMMENTS **17**

APPENDIX

Vicinity Map

Boring Location Plan

Logs of Borings

United Soil Classification System

General Notes

ASFE

INTRODUCTION

This Geotechnical Engineering Report presents the results of our geotechnical study for the proposed Maintenance Building in Edcouch, Texas. Mr. Erlath Zuehl III, with Jaster-Quintanilla San Antonio, LLP (JQSA), authorized our services on February 19, 2009 by signing Terracon Proposal No. G8808161, dated December 10, 2008.

The purpose of this report is to describe the subsurface conditions observed at the borings drilled for this study, analyze and evaluate the test data, and provide recommendations with respect to:

- Site, subgrade, and fill preparation;
- Foundation depth and allowable bearing pressures; and
- Pavements.

PROJECT DESCRIPTION

Based on the site plan provided by Mr. Erlath Zuehl III, with JQSA, we understand that the project will consist of the construction of a new building on a 5-acre lot located on the north side of E. Santa Rosa Avenue (SH 107), just east of Valencia Street, in Edcouch, Texas. The new single-story building will measure about 7,000 square feet (sf) in plan area. The existing structures will be demolished. Associated pavements consisting of parking areas and access ways are also planned at the site. A new fuel island is also planned.

We anticipate maximum column loads to be less than 50 kips and a maximum floor slab pressure less than 500 psf. We understand that a slab on grade is the preferred foundation system for the new building.

SITE EXPLORATION PROCEDURES

Field Exploration

The subsurface conditions were evaluated by drilling seven borings at the project site. Four borings (B-1 through B-4) were drilled to depths of 25 feet each in the vicinity of the proposed building and fuel island areas. The remaining three borings (P-1 through P-3) were drilled to depths of about 10 feet each with the proposed pavement areas.

The four-inch nominal diameter borings were drilled using conventional truck-mounted drilling equipment at the approximate locations shown on the Boring Location Plan (A-2) of

the Appendix. The borings were located by measuring from existing site features shown on the drawing provided to us without the use of surveying equipment. Boring depths were measured from the existing ground surface at the time of our field activities. The boring elevations were not recorded. The Logs of Borings, presenting the subsurface soil descriptions, type of sampling used, and additional field data, is shown on Pages A-3 through A-9 of the Appendix.

Soil samples were recovered by means of Shelby tubes and the Standard Penetration Test (SPT) in general accordance with the appropriate ASTM standards. The SPT consists of measuring the number of blows (N-value) required for a 140-pound hammer free falling 30 inches to drive a standard split-spoon sampler 12 inches into the subsurface material after being seated 6 inches. The sampling depths, penetration distances, and the N-values are reported on the boring logs. Samples were removed from samplers in the field, visually classified, and appropriately sealed in sample containers to preserve their in-situ moisture contents.

Laboratory Testing

Samples obtained during the field program were visually classified in the laboratory by a geotechnical engineer. A testing program was conducted on selected samples, as directed by the geotechnical engineer, to aid in classification and evaluation of engineering properties required for analyses. Soil classification and laboratory tests were performed in general accordance with the appropriate ASTM standards. Results of the laboratory tests are presented on the Logs of Borings, located in the Appendix, and are discussed in the following section.

Sample Disposal

All samples were returned to our laboratory in Pharr, Texas. Samples not tested in the laboratory will be stored for a period of 30 days subsequent to submittal of this report and will be discarded after this period, unless we are notified otherwise.

SITE CONDITIONS

The site is located on a 5-acre lot located on the north side of E. Santa Rosa Avenue (SH 107), just east of Valencia Street, in Edcouch, Texas. The site currently consists of two offices and a warehouse composing the existing TxDOT facility and associated pavements. Asphalt paving exists at the property. Vegetation generally consists of some trees at the front of the property.

SUBSURFACE CONDITIONS

Area Geology

The site is located on the Lissie Formation of the Pleistocene Period of the Quaternary Age. The soils are mostly composed of clay, silt, sand, gravel and caliche. The soils are gray to brown to pale yellow in color. The gravel is mainly siliceous and locally cemented by and interbedded with sandy caliche. The caliche is massive to nodular. The surface is characterized by many undrained circular to irregular depressions, by relic clay dunes, and by stabilized northwest-trending longitudinal dunes.

Soil Conditions

Our generalization of the subsurface stratigraphy within the project limits, as interpreted from the data obtained during our field exploration activities and laboratory testing program, is as follows:

Stratum	Range in Depth, feet*	Stratum Description and Classification
	0 – ½	1½ to 2 inches Hot Mix Asphaltic Concrete, 3 to 4 inches base material
I	½ – 18	SANDY CLAY (CL); dark brown to light tan and gray; medium stiff to very stiff. With “Fill” features to 2 feet.
II	13 – 22	CLAYEY SAND (SC); light reddish-tan; loose to medium dense. Encountered only in borings B-1 through B-4.
III	22 – 25	SILTY CLAY (CL); brown and reddish-brown; medium dense to very dense. Encountered only in borings B-1 through B-4.

The strata thicknesses and depths to interfaces are approximate. Our measurements are referenced from the ground surface at the time of our drilling activities. Subsurface conditions may vary away from the boring locations.

Hot Mix Asphaltic Concrete (HMAC) followed by base material were encountered in all borings as indicated in the boring logs found in the Appendix.

The Stratum I Sandy Clay (CL) soils have measured plasticity indices of 13 to 31 percent. These soils are anticipated to undergo low to high volumetric change due to moisture variation. In-situ moisture contents ranged from 14 to 24 percent, which is about 2 percent to 10 percent above their respective plastic limits. These Sandy Clay (CL) soils generally

exhibit a medium stiff to hard relative consistency based on pocket penetrometer readings of 0.5 to 4.5 tons per square foot (tsf) and compressive strengths of 1.0 to 4.1 tsf.

The Stratum II Clayey Sand (SC) soils are not expected to undergo significant volumetric changes as a result of fluctuations in moisture content due to their granular nature as indicated by 21 to 37 percent of the soils passing the No. 200 sieve. In-situ moisture contents ranged from 19 to 25 percent. These Clayey Sand (SC) soils generally exhibit a loose to medium dense relative density based on Standard Penetration Tests (SPT) N-values of 9 to 14 blows per foot of penetration.

The Stratum III Silty Clay (CL) soils have measured plasticity indices of 11 to 17 percent. These soils are anticipated to undergo low volumetric change due to moisture variation. In-situ moisture contents range from 19 to 20, which is about 5 to 7 percent above their respective plastic limits. These Silty Clay (CL) soils generally exhibit a stiff to very stiff relative consistency based on SPT N-values of 16 to 21 blows per foot.

Groundwater Conditions

The borings were advanced using dry drilling techniques to their termination depths in an effort to evaluate groundwater levels at the time of our investigation. Subsurface water was encountered during the drilling operations. After 24 hours, the bore holes had caved and subsequent subsurface water levels were not able to be obtained. The depths to which subsurface water and cave-in were encountered are presented in the table below. The borings were backfilled with soil cuttings after the drilling and subsurface water monitoring operations were completed. Subsurface water was not encountered in the shallow pavement borings.

***Depth of Subsurface Water, feet**

Boring No.	Initial, ft	Cave-In, ft
B-1	17	13½
B-2	18	14
B-3	18	16
B-4	18	16½

* The subsurface water and sloughing depths are based on measurements referenced from the ground surface at the time of our drilling activities and after the completion of our drilling operations. Subsurface water levels and cave-in depths have been rounded to the nearest half-foot.

It should be noted that short-term field observations generally do not permit an accurate evaluation of the subsurface water levels in this general area. Subsurface water levels are influenced by seasonal and climatic conditions, which generally result in fluctuations in the elevation of the subsurface water level over time. Therefore, the foundation contractor

should check the subsurface water conditions just prior to foundation excavation activities. Specific information concerning subsurface water is noted on each boring log presented in Appendix A of this report.

ENGINEERING RECOMMENDATIONS

The following recommendations are based upon the data obtained in our field and laboratory programs, project information provided to us and on our experience with similar subsurface and site conditions.

Geotechnical Considerations

Grade changes for the proposed site were not provided to us at the time of this report. However, based on the existing topography, we anticipate that grade will be raised no less than 1 foot in the building area for drainage purposes.

The site appears suitable for the proposed construction. However, fill features were encountered in some borings drilled at the site. It is our opinion that the existing fill material is not suitable for supporting the proposed building, and will require complete removal, which can be achieved by overexcavating about 2 feet within the proposed building area.

Moderately expansive soils are present at the site. This report provides recommendations to help mitigate the effects of soil shrinkage and expansion. However, even if these procedures are followed, some movement and at least minor cracking in the structures should be anticipated. The severity of cracking and other cosmetic damage such as uneven floor slabs will probably increase if any modification of the site results in excessive wetting or drying of the expansive soils. Eliminating the risk of movement and cosmetic distress may not be feasible, but it may be possible to further reduce the risk of movement if significantly more expensive measures are used during construction. Some of these options are discussed in this report such as in the **Earthwork** section of this report. We would be pleased to discuss other construction alternatives that could further reduce the potential for movement with you upon request.

Recommendations regarding foundations and other issues related to the geotechnical aspects of the project are presented in the following sections.

Foundation Systems

Based upon the subsurface conditions observed, it is our opinion that a monolithic slab and grade beam foundation system would be appropriate to support the proposed structure, provided the subgrade soils are prepared as outlined in this report. Spread footings may also be utilized to support for areas of concentrated loads. Recommendations for a slab

foundation system and spread footings, along with other geotechnical considerations for this project, are included in the following subsections.

Site Preparation

Site preparation for the proposed project should include removing existing structures, vegetation, loose topsoil and other unsuitable materials encountered on-site. Additional excavation as required for site improvement and described herein should be performed. The depressions or excavations created should be cleaned of loose material and backfilled as outlined in the following paragraphs. The building pad should be constructed as discussed herein and in the **Earthwork** section of this report.

Slab Foundation

A slab foundation system may be utilized to support the proposed structure provided the subgrade for the building area is prepared in accordance with the recommendations contained herein. Atterberg Limit tests indicate that the soils present at the site generally exhibit low to high expansion potential. Using Texas Department of Transportation (TxDOT) Method TEX-124-E, we estimate that the soils exhibit a Potential Vertical Rise (PVR) of about 1½ inches in their present condition. Foundation movements on the order of 1 inch or less may be considered to be within acceptable structural tolerances. Preparing the site as described in the **Earthwork** section of this report and limiting applied load to the bearing capacities provided assist in maintaining 1 inch or less of settlement.

Provided that at least 2 feet of existing soil with fill features are removed from the building area and that select fill is used to complete the building pad to about 1 foot above existing grade, the foundation design parameters provided below may be used. The building area is defined as the area that includes the building footprint and extends at least 3 feet horizontally beyond the building perimeter including any adjacent sidewalks and patios. This option should result in a minimum of 3 feet of select fill beneath the building slab.

The foundation design parameters presented below are based on the criteria published by the Prestressed Concrete Institute (PCI), the Building Research Advisory Board (BRAB) and the Post-Tensioning Institute (PTI). These are essentially empirical design methods and the recommended design parameters are based on our understanding of the proposed project, our interpretation of the information and data collected as a part of this study, our area experience, and the criteria published in the PCI, BRAB, and PTI design manuals. The slab-on-grade foundation may be designed using the following parameters provided the subgrade is prepared as discussed in the **Earthwork** section of the report:

1. Select Fill Pad: At least 3 feet of moisture conditioned and compacted select fill overlying 6 inches of moisture conditioned and compacted subgrade

2. Estimated PVR: about 1 inch

3. Climatic Rating: 15

4. Design Plasticity Index: 25

5. Soil Support Index: 0.90

6. Minimum perimeter grade beam embedment depth: 24 inches below final exterior grade

7. Allowable Bearing Capacity for soils that are properly prepared as discussed herein:
   Dead Load Plus Sustained Live Load: 2,000 psf
   Total Net Load: 3,000 psf

Based upon the above recommendations, the grade beams of the slab-on-grade foundation may bear within the native soils or properly compacted select fill, provided that the building pad and subgrade soils are prepared as outlined in the **Earthwork** section of the report. The grade beams may be thickened and widened where necessary to support column loads.

We recommend that the foundation grade beams be not less than 24 inches below final exterior grade. If the grade beams are to extend below this depth, Terracon should be contacted so that the allowable bearing capacities presented above can be revised. This recommendation is for proper development of bearing capacity for the continuous beam sections of the foundation system, and to reduce the potential for water to migrate beneath the foundation. This recommendation is not based on structural considerations. Grade beam depths should be properly evaluated and designed by the structural engineer. The grade beams or slab portions may be thickened and widened to serve as spread footings at concentrated load areas.

The slab-on-grade foundation system should be designed to tolerate the anticipated soil movement and provide satisfactory support to the proposed building. The foundations should have adequate exterior and interior grade beams to provide sufficient rigidity to the foundation system such that the slab deflections that result are considered tolerable to the supported building.

Post construction settlements for the described slab-on-grade foundation system should be about 1 inch or less, provided that the subgrade soils are prepared as outlined herein and that the select fill is properly placed and compacted in accordance with the recommendations contained in this report. Settlement response of the foundation system is

expected to be influenced more by the quality of construction and fill placement than by soil-structure interaction.

Slab Foundation Construction

Excavations for the slab-on-grade foundation should be performed with equipment capable of providing a relatively clean bearing area. The bottom 6 inches of the foundation excavations should be performed using a smooth-toothed excavation bucket or hand labor. The excavations should be neatly excavated and properly formed. Debris in the bottom of the excavations should be removed prior to steel placement. If neat excavation is not possible, the foundation should be overexcavated and formed. All loose materials should be removed from the overexcavated areas and filled with lean concrete or flowable fill (ACI-229R).

Water should not be allowed to infiltrate foundation excavations. To reduce the potential for groundwater seepage into the excavations and to minimize disturbance to the bearing area, we recommend that steel and concrete be placed as soon as possible after the excavations are completed and properly cleaned. The bearing surface of the grade beams should be evaluated immediately prior to placing concrete.

Spread Footings

Spread footings may also be used at areas of concentrated loads. The individual footings should bear no shallower than 3 feet below final site grade. The footings should be designed for a total load net bearing pressure of 3,000 psf or a dead load net bearing pressure of 2,000 psf, whichever results in a larger bearing surface.

The spread footings can provide some uplift resistance for those structures subjected to wind or other induced structural loading. The uplift resistance of a spread footing may be computed using the effective weight of the soil above the spread footing along with the weight of the spread footing and structure. A soil unit weight of 100 pcf may be assumed for the on-site soils placed above the footing, provided the fill is properly compacted.

These design soil criteria are for single, isolated spread footings. Footings on different levels should be placed such that a downward 1(V):2(H) projection from the leading edge of the upper footing passes below the adjacent, deeper foundation unit. All footings should be located such that their edge-to-edge spacing is at least 25 percent of the width of the largest footing involved. If a closer footing spacing is necessary, we should be contacted to evaluate if the single footing capacity is still valid or if a reduction in the single footing capacity is necessary due to the close foundation spacing. The final footing layout should be reviewed by the Geotechnical Engineer.

Settlements should be about 1 inch or less for properly designed and installed spread footing foundations. Settlement of spread footings will be more sensitive to installation techniques than to soil-structure interaction.

Spread Footing Foundation Construction

Spread footing foundations should be neatly excavated. Excavation should be accomplished with a smooth-mouthed bucket. If a toothed bucket is used, excavation with this bucket should be stopped 6 inches above the final bearing surface and the excavation completed with a smooth-mouthed bucket or by hand labor. If neat excavation is not possible then the foundation should be overexcavated and formed. All loose materials should be removed from the overexcavated areas and filled with lean concrete or compacted cement stabilized sand (two sacks cement to one cubic yard of sand) or flowable fill (ACI 229R).

Steel should be placed and the foundation poured the same day of excavation. If not, a seal slab consisting of lean concrete should be poured to protect the exposed foundation soils. The bearing surface should be excavated with a slight slope to create an internal sump for runoff water collection and removal. If surface runoff water in excess of 2 inches accumulates at the bottom of the excavation, it should be pumped out prior to concrete placement. Under no circumstances should water be allowed to adversely affect the quality of the bearing surface.

If the spread footing is buried, backfill above the foundation may be the excavated on-site soils or select fill soils. Backfill soils should be compacted to at least 95 percent of the maximum dry density as determined by the standard moisture/density test (ASTM D 698) at moisture contents above the optimum moisture content. The backfill should be placed in thin, loose lifts not to exceed 8 inches, with compacted thickness not to exceed 6 inches.

Foundation Construction Monitoring

The performance of the foundation system for the proposed structure will be highly dependent upon the quality of construction. Thus, we recommend that the subgrade and fill compaction and foundation installation be monitored full time by an experienced Terracon soil technician under the direction of our geotechnical engineer. During foundation installation, the bottom of the foundation excavation should be monitored to evaluate the subgrade.

Pavement Construction

We anticipate that the pavement subgrade will generally consist of on-site soils and/or select fill, depending on the final grading plan. The pavement subgrade areas should be prepared as discussed in the **Earthwork** section. Chemical (cement) treatment is recommended to increase the supporting value of the subgrade soils.

Once the subgrade is properly prepared both flexible pavement (consisting of asphalt and base material) and reinforced concrete pavement systems may be considered for this project. Detailed traffic loads and frequencies were not available at the time of preparation of this report. However, it is anticipated that traffic will consist primarily of passenger vehicles in the parking areas and passenger vehicles combined with garbage trucks and occasional large multi-axle delivery trucks in driveways.

Listed below are pavement component thicknesses, which may be used as a guide for pavement systems at the site. It should be noted that these systems were derived based on general characterization of the subgrade. No specific testing (such as CBR tests, resilient modulus tests, etc.) was performed for this project to evaluate the support characteristics of the subgrade. Design and construction of Portland Cement Concrete (PCC) pavements should be performed in accordance with ACI 330 "Guide for Design and Construction of PCC Parking Lots".

	FLEXIBLE PAVEMENT SYSTEM Material Thickness, inches			
	With Modified Subgrade		**Without Modified Subgrade**	
Component	**Parking Areas**	**Drive Ways**	**Parking Areas**	**Drive Ways**
HMAC, Type C surface or Type D	2.0	2.5	2.5	3.0
Granular Base Course	8.0	9.0	10.0	11.0
Modified Subgrade	6.0	6.0	---	---
Moisture Conditioned Subgrade	YES	YES	8.0	8.0

	RIGID PAVEMENT SYSTEM Material Thickness, inches			
	With Modified Subgrade		**Without Modified Subgrade**	
Component	**Parking Areas**	**Drive Ways**	**Parking Areas**	**Drive Ways**
Reinforced Concrete	5.0	6.0	5.5	6.5
Modified Subgrade	8.0	8.0	---	---
Moisture Conditioned Subgrade	YES	YES	8.0	8.0

We recommend that waste dumpster areas be constructed of 7 inches of reinforced concrete. The concrete pad areas should be designed so that the vehicle wheels of the

collection truck are supported on the concrete while the dumpster is being lifted. Dumpster areas that are not designed in this manner often experience localized failures due to large wheel loading imposed during waste collection.

Reinforcing Steel: #3 bars spaced at 12 inches or #4 bars spaced at 18 inches on centers in both directions.

Control Joint Spacing: Maximum of 12 feet. If sawcut, control joints should be cut within 6 to 12 hours of concrete placement.

Expansion Joint Spacing: ACI recommendations indicate that regularly spaced expansion joints may be deleted from concrete pavements. Therefore, the installation of expansion joints is optional and should be evaluated by the design team.

Dowels at Expansion Joints: ¾ inch bars, 18 inches in length, with one end treated to slip, spaced at 12 inches on centers at each joint.

Presented below are our recommended material requirements for the various pavement sections.

Hot Mix Asphaltic Concrete Surface Course - The asphaltic concrete surface course should be plant mixed, hot laid Type D (Fine Graded Surface Course) meeting the specifications requirements in TxDOT Item 340. Specific criteria for the job specifications should include compaction to within an air void range of 5 to 9 percent calculated using the maximum theoretical gravity mix measured by TxDOT Tex-227-F. The asphalt cement content by percent of total mixture weight should fall within a tolerance of ± 0.5 percent asphalt cement from the job mix design.

Reinforced Concrete Pavement - The materials and properties of reinforced concrete shall meet applicable requirements in the ACI Manual of Concrete Practice. The Portland cement concrete mix should have a minimum 28 day compressive strength of 3,500 pounds per square inch (psi).

Base Material - Base material should be composed of crushed limestone or crushed concrete meeting the requirements of TxDOT Item 247, Type A or D, Grades 1 to 3. The base should be compacted to a minimum of 95 percent of the maximum dry density as determined by the Modified Effort (ASTM D 1557) within 2 percent of optimum moisture.

As an alternate to the Type A base, a gravel base material composed of crushed or uncrushed gravel meeting all of the requirements of 2004 TxDOT Item 247, Type B or C, Grade 1 or 2 including triaxial strength may be used. The gravel base material should be

compacted to at least 95 percent of the maximum dry density as determined by the modified moisture-density relationship (ASTM D 1557) at moisture contents within 2 percent of optimum moisture optimum moisture content. If it is necessary to use additives to the material to meet these criteria, the amount of additive should be limited so as not to create a rigid base layer that has a tendency to dry, shrink, and crack.

Modified Subgrade - The on-site surficial soils may be treated in accordance with the TxDOT 2004 Standard Specifications Item 260. The pulverization, mixing and curing of the treated subgrade is of particular importance in these sandy soils. The appropriate amount of modifier should be determined for subgrade soils by conducting laboratory tests just prior to construction. For estimation and planning purposes we estimate that about 4 percent modifier for on-site surficial soils can be used. The modified subgrade should be compacted to a minimum of 95 percent of the Standard Effort (ASTM D 698) maximum dry density at a moisture content above the optimum moisture content. The subgrade is not suitable for heavy construction traffic prior to paving.

Re-Use of Existing Asphaltic Concrete and Base Material in Proposed Pavement Areas

All borings were drilled within existing paved areas. We anticipate that the reuse of the existing asphaltic concrete and base material in proposed pavement areas may be desired. The existing asphaltic concrete/base material may be considered for reuse as a subbase in new pavement sections provided the subbase is properly processed as stated below.

To incorporate the existing asphalt into the subbase, the asphalt should be properly pulverized to reduce the maximum particle size to 2 inches or less, with the resulting mix of asphalt and base exhibiting a uniform gradation. (The gradation should be reviewed by Terracon for proper grain size distribution.) The asphalt should be thoroughly mixed with the underlying base for a minimum depth of 3 to 4 inches (deeper in areas where the asphalt is thicker) such that a uniform blend of asphalt particles and base material results). Care should be exercised to prevent mixture of the underlying clay subgrade with the base during the mixing operations. When removing the existing asphalt/base mixture for reuse, extreme care should be taken to avoid mixing of the asphalt/base with the underlying clay subgrade. Such mixing will likely render the material unsuitable for reuse as subbase.

The subbase should be compacted to at least 95 percent of the ASTM D 698 maximum dry density to within 2 percent of the optimum moisture content. If the existing asphalt is pulverized and incorporated into the subbase, field density tests with a nuclear-density gauge will be difficult (due to variations in the asphalt/base mix and the fact that nuclear density gauges interpret hydrocarbons in the asphalt as containing moisture) and a specialized program of checking for proper compaction in the field will likely be required.

If the existing asphaltic concrete is planned to be utilized as part of the subbase, we recommend that the Contractor's proposed pulverizing and mixing operations be reviewed

by Terracon to check that they parallel the recommendations in this report. It would be highly beneficial to perform pulverization and mixing of a test section prior to actual construction to verify that the Contractor's proposed methods will meet the intentions indicated herein.

It is important that proper perimeter drainage be provided so that infiltration of surface water from unpaved areas surrounding the pavement is reduced, or if this is not possible, curbs should extend through the base and into the subgrade for a depth of at least 4 inches. A sealant compatible to both asphalt and concrete should be provided at concrete-asphalt interfaces. We should note that post-construction subgrade movements and some cracking of the asphaltic pavements is not uncommon for subgrade conditions such as those observed at this site. Although chemical treatment will help to reduce such movement/cracking, it cannot be economically eliminated.

Related civil design factors such as subgrade drainage, shoulder support, cross-sectional configurations, surface elevations and environmental factors which will significantly affect the service life must be included in the preparation of the construction drawings and specifications. Normal periodic maintenance will be required.

Earthwork

We recognize the uncertainty of knowing what will be encountered during site excavation as a result of the existing structures, or previous underground construction. Any debris, foundations or utilities that are present within recommended cut or fill zones must be removed. If these elements are below any cut/fill, they may remain in place provided they do not interfere with the building foundation system. However, if the utility is a sewer line, we recommend that it be filled with a cementitious grout material as part of the abandonment.

Construction areas should be stripped of existing structures and foundations, all vegetation, organics, loose topsoil, and other unsuitable surface materials. The exposed soil subgrade area should be proofrolled with a 15-ton roller or loaded dump truck to detect weak areas. Weak areas detected during proofrolling, as well as zones of fill containing organics or debris, should be removed and replaced with select fill or soils exhibiting similar classification, moisture content, and density as the adjacent in-situ soils. Proofrolling and removal of organics should be performed under the direct supervision of the geotechnical engineer or his representative.

Subsequent to proofrolling, and just prior to placement of remaining fill material, the exposed subgrade within these areas should be evaluated for moisture and density. The subgrade soils should have moisture contents above the optimum moisture content, and have an in-place dry density of at least 95 percent of the Standard Effort (ASTM D 698) maximum dry density of the in-situ soils. If the moisture or density does not meet the above criteria, the subgrade should be scarified to a minimum depth of 8 inches, moisture adjusted to above

the optimum moisture content, and compacted to at least 95 percent of the Standard Effort (ASTM D 698) maximum dry density.

We understand that some grade adjustments may be required at the site. Grade adjustments for the site should be accomplished with select fill, at least 6 inches, composed of clean, sandy clay with a plasticity index ranging between 7 and 20 percent. The top 6 inches of the construction areas (above the existing grades) can be constructed using a select fill consisting of non-expansive inert material comprised of clayey sand, clayey gravel, caliche or crushed limestone base material. The clayey gravel materials should meet the gradation requirements of Item 247, Type B, Grades 1 through 3 as specified in the 2004 TxDOT Standard Specifications Manual. Crushed limestone material should meet the requirements of 2004 TxDOT Item 247, Type A, Grades 1 through 3. The select fill materials should be free of organic material and debris, and should not contain stones larger than 2 inches in the maximum dimension.

Select fill should be placed on prepared surfaces in lifts not to exceed 8 inches loose measure, with compacted thickness not to exceed 6 inches. Select fill should be compacted to at least 95 percent of the Standard Effort (ASTM D 698) maximum dry density above the optimum moisture content.

Prior to any filling operations, samples of the proposed borrow materials should be obtained for laboratory moisture-density testing. The tests will provide a basis for evaluation of fill compaction by in-place density testing. A qualified soil technician should perform sufficient in-place density tests during the filling operations to evaluate that proper levels of compaction, including dry unit weight and moisture content, are being attained.

Use of Concrete, Concrete Block, and Brick Demolition Debris for Engineered Fill

The existing structures will be demolished to make room for the proposed structures. The demolition process will result in Portland cement concrete, concrete block, and brick rubble. Keeping these materials reasonably well-segregated during the demolition process will assist in reusing these materials on site.

The Portland cement concrete rubble and concrete block can be used for engineered fill in both structural and non-structural areas. These materials must be processed to create a well-graded material with a top size of 2-inches. The brick can be used in non-structural areas provided it is also processed to create a well-graded material with a top size of 2-inches.

Wet Weather Considerations

Construction following wet weather periods will likely encounter difficulties due to the wet or soft surface soils becoming a general hindrance to equipment due to rutting and pumping of the soil surface. If the subgrade cannot be adequately compacted to minimum densities as described above, one of the following measures will be required: 1) removal and replacement with select fill, 2) chemical treatment of the soil to dry and increase the stability of the subgrade, or 3) drying by natural means if the schedule allows. In our experience with similar soils in this area, it is our opinion that chemical treatment is the most efficient and effective method to increase the supporting value of wet and weak subgrade. Terracon should be contacted for additional recommendations if chemical treatment of the soils is needed.

Drainage

It is important that positive drainage be established during construction such that water will not pond around the building sites during or following the construction period. Water permitted to pond next to the buildings can result in greater soil movements than those discussed in this report. These greater movements can result in unacceptable differential floor slab movements, cracked slabs and walls, and roof leaks. Estimated movements described in this report are based on effective drainage for the life of the structure and cannot be relied upon if effective drainage is not maintained.

Exposed ground should be sloped at a minimum 5 percent away from the building for at least 10 feet beyond the perimeter of the building. After building construction and landscaping, we recommend verifying final grades to document that effective drainage has been achieved. Grades around the structures should also be periodically inspected and adjusted as necessary, as part of the structure's maintenance program.

Where paving or flatwork abuts the structure, care should be taken that the joint is properly sealed and maintained. Roof drains should discharge on pavement or be extended away from the structure, and ideally should discharge to storm sewers by closed pipe.

The building subgrade should be sealed against water intrusion along trenches and conduits created for utility access under the building. The upper portion of utility excavations should also be backfilled with properly compacted clayey soils to minimize infiltration of surface water. A clay "plug" should be provided in the trench on the exterior of the building to prevent water from gaining access along the trench to the subgrade beneath the structure.

Existing Trees

Medium sized trees are located at the site. These trees may be within the construction limits of the planned structure. There are concerns regarding the location of existing trees or any recently cleared trees in the immediate vicinity of any planned facilities. Based on the

present layout of the planned facilities and the location of the existing trees in the area, it is our opinion there is a moderate potential for structural distress to the planned structures in the future, due to the trees and tree root systems, if the trees and root systems are not removed or corrective measures are not taken.

Structural distress can be caused by existing trees and vegetation if the root systems extend under the planned buildings. The potential distress to the structures can be caused in several ways which may include one or more of the following:

- Settlement beneath the foundations due to decay of the tree roots should the trees die or be cut down.
- Uplift forces on the grade beams due to growth of the tree roots pushing up on the foundation system. Concrete sidewalks are very susceptible to this type of distress.
- Volume reduction or shrinkage of the subsurface soils due to loss of moisture content from the tree root systems adjacent to and beneath the buildings which may cause settlement.

Solutions to this situation may include the following:

- Remove (cut down) the trees, grub the roots as completely as possible and replace the area of soil and roots with select fill;
- Strengthening the grade beams by increasing the size, and/or placing additional reinforcement in the grade beams and slab in the area of the trees;
- Underpinning the foundations by supporting the grade beams bearing below the root system;
- Cutting the roots extending under the buildings to prevent moisture loss and installing a root barrier to retard future growth of roots under the buildings. Grub the cut roots as completely as possible. Depending on the size and density of the existing root system left in place, this may cause future settlement due to the eventual decay of the roots. However, this may take 5 to 10 years; or
- Leave the trees in place but construct a “cut off wall” or “root barrier” between the buildings and trees. The cut off wall should be at least 12 inches in width and a minimum of 5 feet deep. However, the actual depth should be based on the type of root system the tree has, i.e., shallow or deep root, etc. A landscape consultant should be retained to assess this situation. If the tree

has a shallow root system, the 5 foot cut off wall depth should be adequate. The cut off wall may need to extend deeper than 5 feet if the roots are deep. In addition, a controlled watering program will need to be developed so the tree root systems maintain a good water balance, thus the root systems will not want to extract moisture from beneath the buildings.

GENERAL COMMENTS

Terracon should be retained to review the final design plans and specifications so comments can be made regarding interpretation and implementation of our geotechnical recommendations in the design and specifications. Terracon also should be retained to provide testing and observation during excavation, grading, foundation and construction phases of the project.

The analysis and recommendations presented in this report are based upon the data obtained from the borings performed at the indicated locations and from other information discussed in this report. This report does not reflect variations that may occur between borings, across the site, or due to the modifying effects of weather. The nature and extent of such variations may not become evident until during or after construction. If variations appear, we should be immediately notified so that further evaluation and supplemental recommendations can be provided.

The scope of services for this project does not include either specifically or by implication any environmental or biological (e.g., mold, fungi, bacteria) assessment of the site or identification or prevention of pollutants, hazardous materials or conditions. If the owner is concerned about the potential for such contamination or pollution, other studies should be undertaken.

This report has been prepared for the exclusive use of our client for specific application to the project discussed and has been prepared in accordance with generally accepted geotechnical engineering practices. No warranties, either express or implied, are intended or made. Site safety, excavation support, and dewatering requirements are the responsibility of others. In the event that changes in the nature, design, or location of the project as outlined in this report are planned, the conclusions and recommendations contained in this report shall not be considered valid unless Terracon reviews the changes and either verifies or modifies the conclusions of this report in writing.

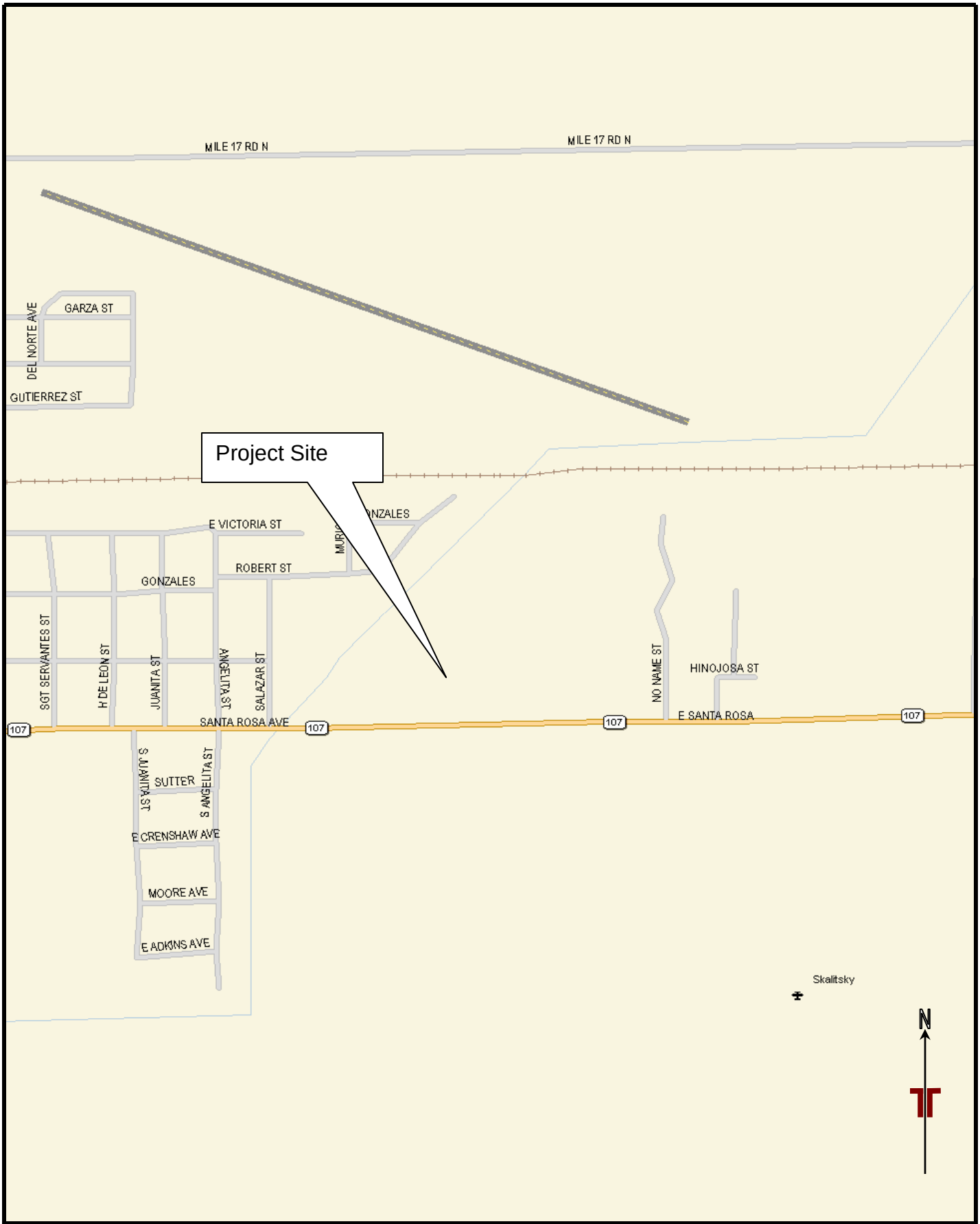

Project Mngr: M.O.S.	**Project No.:** 88095012	Terracon Consulting Engineers & Scientists 1506 Mid-Cities Drive Pharr, Texas 78577 Phone: 956.283.8254 Fax: 956.283.8279	Vicinity Map	FIG No.
Drawn By: EP (88)	**Scale:** Not to Scale		TxDot Maintenance Building Santa Rosa Avenue (SH 107) Edcouch, Texas For: Jaster-Quintanilla San Antonio, LLP	A-1
Checked By: M.O.S.	**File No.:** Photosheet 1			
Approved By: M.O.S.	**Date:** 03/10/09			

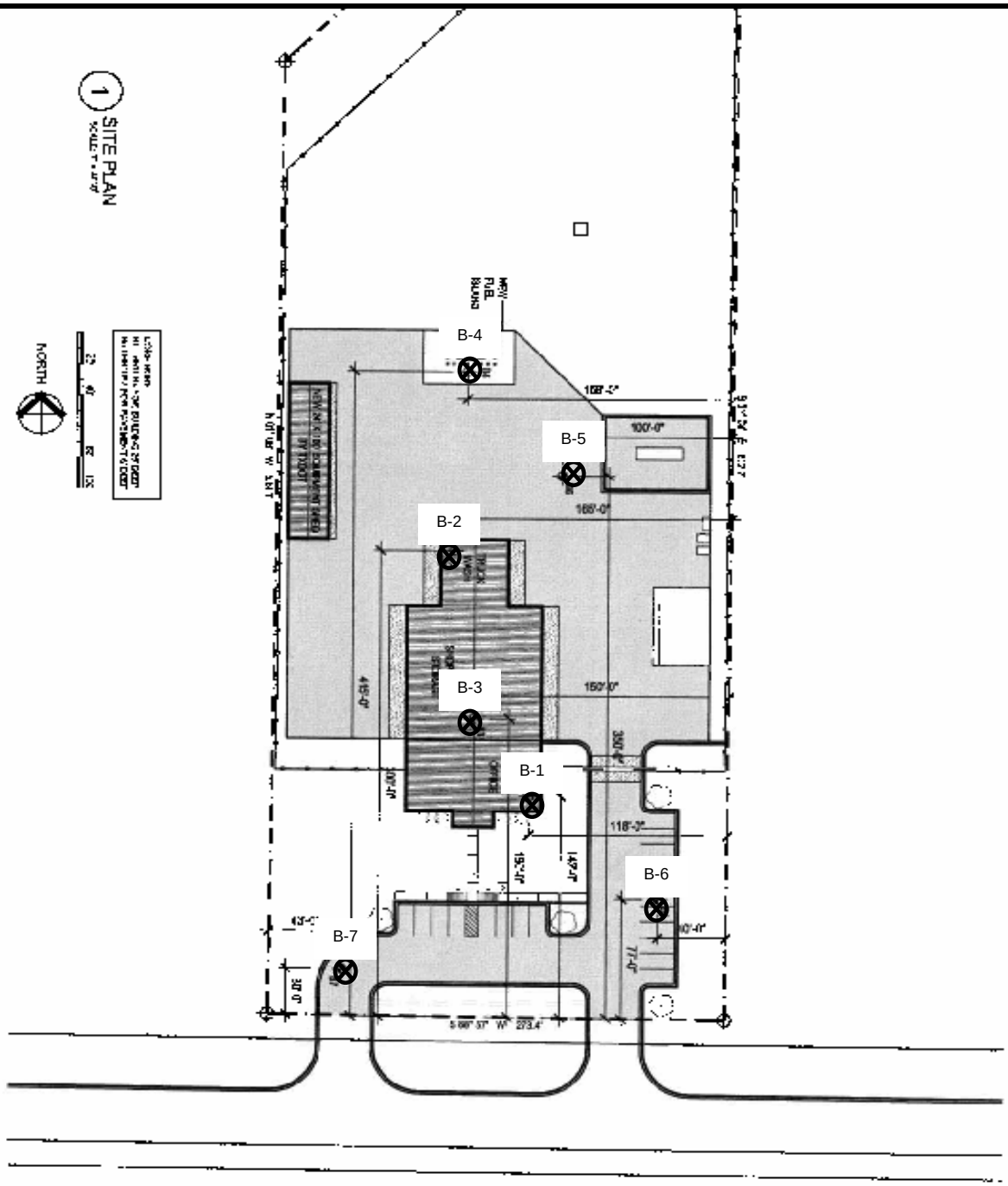

- Approximate Boring Locations

Project Mngr: M.O.S.	**Project No.:** 88095012	Terracon Consulting Engineers & Scientists 1506 Mid-Cities Drive Pharr, Texas 78577 Phone: 956.283.8254 Fax: 956.283.8279	Boring Location
Drawn By: EP (88)	**Scale:** Not to Scale		TxDot Maintenance Building Santa Rosa Avenue (SH 107) Edcouch, Texas For: Jaster-Quintanilla San Antonio, LLP
Checked By: M.O.S.	**File No.:** Photosheet 1		
Approved By: M.O.S.	**Date:** 03/10/09		

FIG No.

A-2

LOG OF BORING NO. B-1

CLIENT: **Jaster-Quintanilla San Antonio, LLP San Antonio, Texas**	PROJECT: **TxDot Maintenance Building**
BORING LOCATION: **Southeast Corner of Proposed Building**	SITE: **Santa Rosa Avenue (SH 107), Edcouch, Texas**

Graphic Log	DESCRIPTION	DEPTH, FEET	SAMPLES: USCS SYMBOL	SAMPLES: TYPE	SAMPLES: SPT OR TXDOT CPT BLOWS/FOOT	SAMPLES: CALIBRATED HAND PENETROM., TSF	SAMPLES: RECOVERY, % / RQD, %	TESTS: MOISTURE CONTENT, %	TESTS: DRY DENSITY, PCF	TESTS: LIQUID LIMIT, %	TESTS: PLASTICITY INDEX	TESTS: MINUS #200 SIEVE, %	TESTS: COMPRESSIVE STRENGTH, TSF	TESTS: FAILURE STRAIN, %
	AUGER													
	0.5 1½ to 2 inches HMAC, 3 to 4 inches base material													
	STRATUM I **SANDY CLAY** Medium stiff to very stiff; dark brown - grades to light tan and gray below 2 feet		CL	ST		2.0		17		27	14			
			CL	ST		0.5		19	112					
		5	CL	ST		2.5		18	113				3.0	6.5
			CL	ST		2.5		22		41	26			
			CL	ST		3.5		22	106				2.3	9.2
		10												
			CL	ST		0.5		15		43	30			
		15												
	17.0 ▽ **STRATUM II** **CLAYEY SAND** Loose; light reddish-tan		SC	SPT	9			23				28		
	22.0	20												
	STRATUM II **SILTY CLAY** Very stiff; light reddish-tan		CL	SPT	21			20						
	25.0 Boring Terminated at 25 Feet	25												

STRATIFICATION LINES REPRESENT APPROXIMATE BOUNDARIES BETWEEN SOIL AND ROCK TYPES. IN SITU, THE TRANSITION BETWEEN STRATA MAY BE MORE GRADUAL.

REMARKS: Dry augered from 0 to 25 feet. Subsurface water level was observed at 17 feet during drilling activities. After about 24 hours the holed caved in at 13½ feet. The boring was backfilled with cuttings after completion of the subsurface water level readings.

WATER LEVEL OBSERVATIONS, FEET			
WL	▽ 17	WD	▼
WL	▼		▼
WL	**Cave in at 13½ feet**		

Terracon

DATE DRILLED	Page 1 of 1
2/24/2009	**FIGURE**
PROJECT NUMBER	**A-3**
88095012	

LOG OF BORING NO. B-2

CLIENT: **Jaster-Quintanilla San Antonio, LLP**
San Antonio, Texas

PROJECT: **TxDot Maintenance Building**

BORING LOCATION: **North End of Proposed Building**

SITE: **Santa Rosa Avenue (SH 107), Edcouch, Texas**

Graphic Log	DESCRIPTION	DEPTH, FEET	SAMPLES: USCS SYMBOL	SAMPLES: TYPE	SAMPLES: SPT OR TXDOT CPT BLOWS/FOOT	SAMPLES: CALIBRATED HAND PENETROM., TSF	SAMPLES: RECOVERY, % / RQD, %	TESTS: MOISTURE CONTENT, %	TESTS: DRY DENSITY, PCF	TESTS: LIQUID LIMIT, %	TESTS: PLASTICITY INDEX	TESTS: MINUS #200 SIEVE, %	TESTS: COMPRESSIVE STRENGTH, TSF	TESTS: FAILURE STRAIN, %
	AUGER													
	0.5 1½ to 2 inches HMAC, 3 to 4 inches base material		CL	ST		2.0		18		27	13			
	STRATUM I **SANDY CLAY** Stiff to hard; dark brown - grades to light tan and gray below 2 feet		CL	ST		1.5		21	104				1.0	9.4
		5	CL	ST		3.5		18		44	29			
			CL	ST		3.0		18	108				3.2	9.5
			CL	ST		4.5		17	111				2.6	3.4
		10												
	- grades to medium stiff at 13 feet		CL	ST		1.0		22		32	20			
	18.0 ▽	15												
	STRATUM II **CLAYEY SAND** Loose; light reddish-tan		SC	SPT	9			23				23		
	22.0	20												
	STRATUM III **SILTY CLAY** Stiff; light reddish-tan		CL	SPT	12			19		29	17			
	25.0 Boring Terminated at 25 Feet	25												

STRATIFICATION LINES REPRESENT APPROXIMATE BOUNDARIES BETWEEN SOIL AND ROCK TYPES. IN SITU, THE TRANSITION BETWEEN STRATA MAY BE MORE GRADUAL.

REMARKS: Dry augered from 0 to 25 feet. Subsurface water level was observed at 18 feet during drilling activities. After about 24 hours the holed caved in at 14 feet. The boring was backfilled with cuttings after completion of the subsurface water level readings.

WATER LEVEL OBSERVATIONS, FEET			
WL	▽ 18	WD	▼
WL	▼		▼
WL	Cave in at 14 feet		

Terracon

DATE DRILLED 2/24/2009

PROJECT NUMBER 88095012

FIGURE A-4

LOG OF BORING NO. B-3

CLIENT: **Jaster-Quintanilla San Antonio, LLP**
San Antonio, Texas

PROJECT: **TxDot Maintenance Building**

BORING LOCATION: **Center Area of Building**

SITE: **Santa Rosa Avenue (SH 107), Edcouch, Texas**

Graphic Log	DESCRIPTION	DEPTH, FEET	SAMPLES: USCS SYMBOL	SAMPLES: TYPE	SAMPLES: SPT OR TXDOT CPT BLOWS/FOOT	SAMPLES: CALIBRATED HAND PENETROM., TSF	SAMPLES: RECOVERY, % / RQD, %	TESTS: MOISTURE CONTENT, %	TESTS: DRY DENSITY, PCF	TESTS: LIQUID LIMIT, %	TESTS: PLASTICITY INDEX	TESTS: MINUS #200 SIEVE, %	TESTS: COMPRESSIVE STRENGTH, TSF	TESTS: FAILURE STRAIN, %
	AUGER													
	0.5 1½ to 2 inches HMAC, 3 to 4 inches base material													
	STRATUM I **SANDY CLAY** Medium stiff to very stiff; dark brown; with Fill features to 2 feet - grades to light reddish-tan below 2 feet		CL	ST		4.0		12						
			CL	ST		0.5		23		32	19			
		5	CL	ST		3.5		16	113				2.5	8.9
			CL	ST		2.5		21		49	31			
			CL	ST		4.0		19	111				2.4	5.5
		10												
			CL	ST		2.0		18	113				1.2	9.4
		15												
	18.0 ▽ **STRATUM II** **CLAYEY SAND** Loose; light reddish-tan		SC	SPT	9			25				37		
	22.0 **STRATUM II** **SILTY CLAY** Very stiff; light reddish-tan	20												
	25.0 Boring Terminated at 25 Feet		CL	SPT	16			19		26	11			
		25												

STRATIFICATION LINES REPRESENT APPROXIMATE BOUNDARIES BETWEEN SOIL AND ROCK TYPES. IN SITU, THE TRANSITION BETWEEN STRATA MAY BE MORE GRADUAL.

REMARKS: Dry augered from 0 to 25 feet. Subsurface water level was observed at 16 feet during drilling activities. After about 24 hours the holed caved in at 16 feet. The boring was backfilled with cuttings after completion of the subsurface water level readings.

WATER LEVEL OBSERVATIONS, FEET			
WL	▽ 18	WD	▼
WL	▼		▼
WL	Cave in at 16 feet		

Terracon

DATE DRILLED 2/24/2009

PROJECT NUMBER 88095012

FIGURE A-5

LOG OF BORING NO. B-4

CLIENT: **Jaster-Quintanilla San Antonio, LLP**
San Antonio, Texas

PROJECT: **TxDot Maintenance Building**

BORING LOCATION: **Proposed Fuel Island Area**

SITE: **Santa Rosa Avenue (SH 107), Edcouch, Texas**

Graphic Log	DESCRIPTION	DEPTH, FEET	SAMPLES: USCS SYMBOL	SAMPLES: TYPE	SAMPLES: SPT OR TXDOT CPT BLOWS/FOOT	SAMPLES: CALIBRATED HAND PENETROM., TSF	SAMPLES: RECOVERY, % / RQD, %	TESTS: MOISTURE CONTENT, %	TESTS: DRY DENSITY, PCF	TESTS: LIQUID LIMIT, %	TESTS: PLASTICITY INDEX	TESTS: MINUS #200 SIEVE, %	TESTS: COMPRESSIVE STRENGTH, TSF	TESTS: FAILURE STRAIN, %
	AUGER													
	0.5 1½ to 2 inches HMAC, 3 to 4 inches base material													
	STRATUM I **SANDY CLAY** Medium stiff to hard; dark brown; with Fill features to 2 feet - grades to light reddish-tan below 4 feet		CL	ST		3.5		14						
			CL	ST		1.0		20		35	21			
		5	CL	ST		1.5		20	167				1.1	10.3
			CL	ST		4.5		14	115	38	25		3.0	9.4
			CL	ST		4.5		18	113				4.1	6.9
		10												
	13.0 **STRATUM II** **CLAYEY SAND** Loose to medium dense; light reddish-tan ▽		SC	ST		0.5		18		30	17	32		
		15												
			SC	SPT	14			19				21		
	22.0 **STRATUM III** **SILTY CLAY** Very stiff; light reddish-tan	20												
	25.0 Boring Terminated at 25 Feet		CL	SPT	16			19						
		25												

STRATIFICATION LINES REPRESENT APPROXIMATE BOUNDARIES BETWEEN SOIL AND ROCK TYPES. IN SITU, THE TRANSITION BETWEEN STRATA MAY BE MORE GRADUAL.

REMARKS: Dry augered from 0 to 25 feet. Subsurface water level was observed at 18 feet during drilling activities. After about 24 hours the holed caved in at 16½ feet. The boring was backfilled with cuttings after completion of the subsurface water level readings.

WATER LEVEL OBSERVATIONS, FEET			
WL	▽ 18	WD	▼
WL	▼		▼
WL	Cave in at 16½ feet		

Terracon

DATE DRILLED 2/24/2009

PROJECT NUMBER 88095012

FIGURE A-6

LOG OF BORING NO. B-5

CLIENT: **Jaster-Quintanilla San Antonio, LLP San Antonio, Texas**	PROJECT: **TxDot Maintenance Building**
BORING LOCATION: **Southeast Parking Lot**	SITE: **Santa Rosa Avenue (SH 107), Edcouch, Texas**

Graphic Log	DESCRIPTION	DEPTH, FEET	SAMPLES: USCS SYMBOL	SAMPLES: TYPE	SAMPLES: SPT OR TXDOT CPT BLOWS/FOOT	SAMPLES: CALIBRATED HAND PENETROM., TSF	SAMPLES: RECOVERY, % / RQD, %	TESTS: MOISTURE CONTENT, %	TESTS: DRY DENSITY, PCF	TESTS: LIQUID LIMIT, %	TESTS: PLASTICITY INDEX	TESTS: MINUS #200 SIEVE, %	TESTS: COMPRESSIVE STRENGTH, TSF	TESTS: FAILURE STRAIN, %
	AUGER													
	0.5 1½ to 2 inches HMAC, 3 to 4 inches base material													
	STRATUM I		CL	ST		2.5		12						
	SANDY CLAY		CL	ST		2.0		22		33	19			
	Stiff to hard; dark brown; with Fill features to 2 feet	5	CL	ST		4.5		17						
	- grades to light reddish-tan below 2 feet		CL	ST		3.0		19		45	31			
	10.0	10	CL	ST		4.5		22						
	Boring Terminated at 10 Feet													

STRATIFICATION LINES REPRESENT APPROXIMATE BOUNDARIES BETWEEN SOIL AND ROCK TYPES. IN SITU, THE TRANSITION BETWEEN STRATA MAY BE MORE GRADUAL.

REMARKS: Dry augered from 0 to 10 feet. Subsurface water was not encountered during drilling activities. The boring was backfilled with cuttings after completion drilling activities.

WATER LEVEL OBSERVATIONS, FEET		
WL	▽	▼
WL	▼	▼
WL		

Terracon

DATE DRILLED 2/24/2009

PROJECT NUMBER 88095012

FIGURE A-7

LOG OF BORING NO. B-6

CLIENT: **Jaster-Quintanilla San Antonio, LLP San Antonio, Texas**	PROJECT: **TxDot Maintenance Building**
BORING LOCATION: **Pavement - Northeast of Proposed Building**	SITE: **Santa Rosa Avenue (SH 107), Edcouch, Texas**

Graphic Log	DESCRIPTION	DEPTH, FEET	SAMPLES					TESTS							
			USCS SYMBOL	TYPE	SPT OR TXDOT CPT BLOWS/FOOT	CALIBRATED HAND PENETROM., TSF	RECOVERY, % / RQD, %	MOISTURE CONTENT, %	DRY DENSITY, PCF	LIQUID LIMIT, %	PLASTICITY INDEX	MINUS #200 SIEVE, %	COMPRESSIVE STRENGTH, TSF	FAILURE STRAIN, %
	AUGER													
	0.5 1½ to 2 inches HMAC, 3 to 4 inches base material **STRATUM I** **SANDY CLAY** Stiff to very stiff; dark brown; with Fill features to 2 feet - grades to light tan below 2 feet		CL	ST		3.5		15		28	15			
			CL	ST		1.0		24						
		5	CL	ST		1.5		20		38	23			
			CL	ST		3.5		20						
	10.0		CL	ST		2.5		19						
	Boring Terminated at 10 Feet	10												

STRATIFICATION LINES REPRESENT APPROXIMATE BOUNDARIES BETWEEN SOIL AND ROCK TYPES. IN SITU, THE TRANSITION BETWEEN STRATA MAY BE MORE GRADUAL.

REMARKS: Dry augered from 0 to 10 feet. Subsurface water was not encountered during drilling activities. The boring was backfilled with cuttings after completion drilling activities.

WATER LEVEL OBSERVATIONS, FEET		
WL	▽	▼
WL	▼	▼
WL		

Terracon

DATE DRILLED 2/24/2009

PROJECT NUMBER 88095012

FIGURE A-8

LOG OF BORING NO. B-7

CLIENT: **Jaster-Quintanilla San Antonio, LLP San Antonio, Texas**	PROJECT: **TxDot Maintenance Building**
BORING LOCATION: **Driveway - West Entrance**	SITE: **Santa Rosa Avenue (SH 107), Edcouch, Texas**

Graphic Log	DESCRIPTION	DEPTH, FEET	SAMPLES: USCS SYMBOL	SAMPLES: TYPE	SAMPLES: SPT OR TXDOT CPT BLOWS/FOOT	SAMPLES: CALIBRATED HAND PENETROM., TSF	SAMPLES: RECOVERY, % / RQD, %	TESTS: MOISTURE CONTENT, %	TESTS: DRY DENSITY, PCF	TESTS: LIQUID LIMIT, %	TESTS: PLASTICITY INDEX	TESTS: MINUS #200 SIEVE, %	TESTS: COMPRESSIVE STRENGTH, TSF	TESTS: FAILURE STRAIN, %
	AUGER													
	0.5 1½ to 2 inches HMAC, 3 to 4 inches base material **STRATUM I** **SANDY CLAY** Very stiff to stiff; dark brown; with Fill features to 2 feet - grades to light tan below 2 feet		CL	ST		3.5		17		32	19			
			CL	ST		2.5		18						
		5	CL	ST		3.5		16		40	27			
			CL	ST		1.5		19						
	10.0		CL	ST		2.0		18						
	Boring Terminated at 10 Feet	10												

STRATIFICATION LINES REPRESENT APPROXIMATE BOUNDARIES BETWEEN SOIL AND ROCK TYPES. IN SITU, THE TRANSITION BETWEEN STRATA MAY BE MORE GRADUAL.

REMARKS: Dry augered from 0 to 10 feet. Subsurface water was not encountered during drilling activities. The boring was backfilled with cuttings after completion drilling activities.

WATER LEVEL OBSERVATIONS, FEET		
WL	▽	▼
WL	▼	▼
WL		

Terracon

DATE DRILLED 2/24/2009

PROJECT NUMBER 88095012

FIGURE A-9

UNIFIED SOIL CLASSIFICATION SYSTEM

Criteria for Assigning Group Symbols and Group Names Using Laboratory Tests[A]					Soil Classification	
					Group Symbol	Group Name[B]
Coarse Grained Soils	Gravels	Clean Gravels	$Cu \geq 4$ and $1 \leq Cc \leq 3$[E]		GW	Well-graded gravel[F]
More than 50% retained	More than 50% of coarse fraction retained on No. 4 sieve	Less than 5% fines[C]	$Cu < 4$ and/or $1 > Cc > 3$[E]		GP	Poorly graded gravel[F]
on No. 200 sieve		Gravels with Fines More than 12% fines[C]	Fines classify as ML or MH		GM	Silty gravel[F,G,H]
			Fines classify as CL or CH		GC	Clayey gravel[F,G,H]
	Sands	Clean Sands	$Cu \geq 6$ and $1 \leq Cc \leq 3$[E]		SW	Well-graded sand[I]
	50% or more of coarse fraction passes No. 4 sieve	Less than 5% fines[D]	$Cu < 6$ and/or $1 > Cc > 3$[E]		SP	Poorly graded sand[I]
		Sands with Fines More than 12% fines[D]	Fines classify as ML or MH		SM	Silty sand[G,H,I]
			Fines Classify as CL or CH		SC	Clayey sand[G,H,I]
Fine-Grained Soils	Silts and Clays	inorganic	PI > 7 and plots on or above "A" line[J]		CL	Lean clay[K,L,M]
50% or more passes the No. 200 sieve	Liquid limit less than 50		PI < 4 or plots below "A" line[J]		ML	Silt[K,L,M]
		organic	Liquid limit - oven dried	< 0.75	OL	Organic clay[K,L,M,N]
			Liquid limit - not dried			Organic silt[K,L,M,O]
	Silts and Clays	inorganic	PI plots on or above "A" line		CH	Fat clay[K,L,M]
	Liquid limit 50 or more		PI plots below "A" line		MH	Elastic Silt[K,L,M]
		organic	Liquid limit - oven dried	< 0.75	OH	Organic clay[K,L,M,P]
			Liquid limit - not dried			Organic silt[K,L,M,Q]
Highly organic soils	Primarily organic matter, dark in color, and organic odor				PT	Peat

[A] Based on the material passing the 3-in. (75-mm) sieve

[B] If field sample contained cobbles or boulders, or both, add "with cobbles or boulders, or both" to group name.

[C] Gravels with 5 to 12% fines require dual symbols: GW-GM well-graded gravel with silt, GW-GC well-graded gravel with clay, GP-GM poorly graded gravel with silt, GP-GC poorly graded gravel with clay.

[D] Sands with 5 to 12% fines require dual symbols: SW-SM well-graded sand with silt, SW-SC well-graded sand with clay, SP-SM poorly graded sand with silt, SP-SC poorly graded sand with clay

[E] $Cu = D_{60}/D_{10}$ $\quad Cc = \dfrac{(D_{30})^2}{D_{10} \times D_{60}}$

[F] If soil contains ≥ 15% sand, add "with sand" to group name.

[G] If fines classify as CL-ML, use dual symbol GC-GM, or SC-SM.

[H] If fines are organic, add "with organic fines" to group name.

[I] If soil contains ≥ 15% gravel, add "with gravel" to group name.

[J] If Atterberg limits plot in shaded area, soil is a CL-ML, silty clay.

[K] If soil contains 15 to 29% plus No. 200, add "with sand" or "with gravel," whichever is predominant.

[L] If soil contains ≥ 30% plus No. 200 predominantly sand, add "sandy" to group name.

[M] If soil contains ≥ 30% plus No. 200, predominantly gravel, add "gravelly" to group name.

[N] PI ≥ 4 and plots on or above "A" line.

[O] PI < 4 or plots below "A" line.

[P] PI plots on or above "A" line.

[Q] PI plots below "A" line.

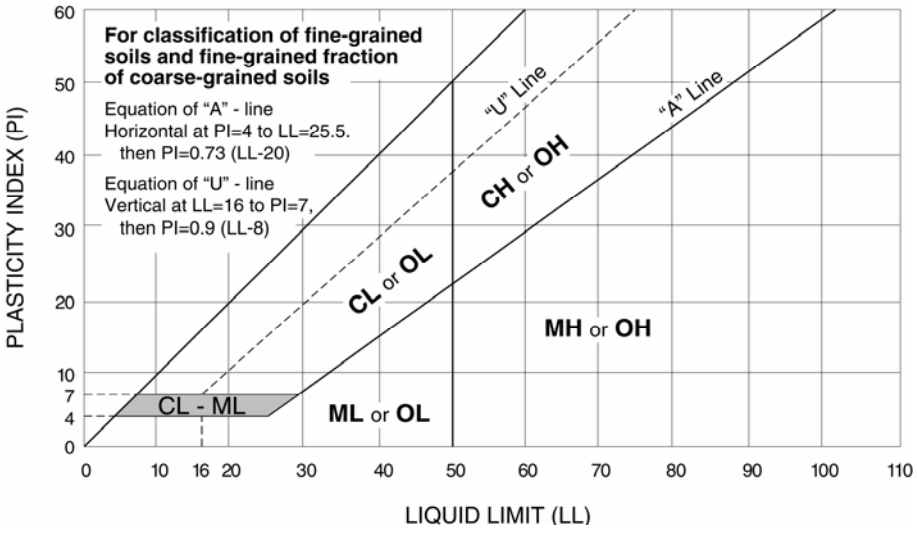

Terracon

GENERAL NOTES

DRILLING & SAMPLING SYMBOLS:

SS:	Split Spoon - 1-3/8" I.D., 2" O.D., unless otherwise noted	HS:	Hollow Stem Auger
ST:	Thin-Walled Tube - 2" O.D., unless otherwise noted	PA:	Power Auger
RS:	Ring Sampler - 2.42" I.D., 3" O.D., unless otherwise noted	HA:	Hand Auger
DB:	Diamond Bit Coring - 4", N, B	RB:	Rock Bit
BS:	Bulk Sample or Auger Sample	WB:	Wash Boring or Mud Rotary

The number of blows required to advance a standard 2-inch O.D. split-spoon sampler (SS) the last 12 inches of the total 18-inch penetration with a 140-pound hammer falling 30 inches is considered the "Standard Penetration" or "N-value".

WATER LEVEL MEASUREMENT SYMBOLS:

WL:	Water Level	WS:	While Sampling	N/E:	Not Encountered
WCI:	Wet Cave in	WD:	While Drilling		
DCI:	Dry Cave in	BCR:	Before Casing Removal		
AB:	After Boring	ACR:	After Casing Removal		

Water levels indicated on the boring logs are the levels measured in the borings at the times indicated. Groundwater levels at other times and other locations across the site could vary. In pervious soils, the indicated levels may reflect the location of groundwater. In low permeability soils, the accurate determination of groundwater levels may not be possible with only short-term observations.

DESCRIPTIVE SOIL CLASSIFICATION: Soil classification is based on the Unified Classification System. Coarse Grained Soils have more than 50% of their dry weight retained on a #200 sieve; their principal descriptors are: boulders, cobbles, gravel or sand. Fine Grained Soils have less than 50% of their dry weight retained on a #200 sieve; they are principally described as clays if they are plastic, and silts if they are slightly plastic or non-plastic. Major constituents may be added as modifiers and minor constituents may be added according to the relative proportions based on grain size. In addition to gradation, coarse-grained soils are defined on the basis of their in-place relative density and fine-grained soils on the basis of their consistency.

CONSISTENCY OF FINE-GRAINED SOILS

Unconfined Compressive Strength, Qu, psf	Standard Penetration or N-value (SS) Blows/Ft.	Consistency
< 500	0 - 1	Very Soft
500 – 1,000	2 - 4	Soft
1,000 – 2,000	4 - 8	Medium Stiff
2,000 – 4,000	8 - 15	Stiff
4,000 – 8,000	15 - 30	Very Stiff
8,000+	> 30	Hard

RELATIVE DENSITY OF COARSE-GRAINED SOILS

Standard Penetration or N-value (SS) Blows/Ft.	Relative Density
0 – 3	Very Loose
4 – 9	Loose
10 – 29	Medium Dense
30 – 49	Dense
> 50	Very Dense

RELATIVE PROPORTIONS OF SAND AND GRAVEL

Descriptive Term(s) of other constituents	Percent of Dry Weight
Trace	< 15
With	15 – 29
Modifier	> 30

GRAIN SIZE TERMINOLOGY

Major Component of Sample	Particle Size
Boulders	Over 12 in. (300mm)
Cobbles	12 in. to 3 in. (300mm to 75 mm)
Gravel	3 in. to #4 sieve (75mm to 4.75 mm)
Sand	#4 to #200 sieve (4.75mm to 0.075mm)
Silt or Clay	Passing #200 Sieve (0.075mm)

RELATIVE PROPORTIONS OF FINES

Descriptive Term(s) of other constituents	Percent of Dry Weight
Trace	< 5
With	5 – 12
Modifiers	> 12

PLASTICITY DESCRIPTION

Term	Plasticity Index
Non-plastic	0
Low	1-10
Medium	11-30
High	> 30

Terracon

Important Information About Your

Geotechnical Engineering Report

Subsurface problems are a principal cause of construction delays, cost overruns, claims, and disputes.

The following information is provided to help you manage your risks.

Geotechnical Services Are Performed for Specific Purposes, Persons, and Projects

Geotechnical engineers structure their services to meet the specific needs of their clients. A geotechnical engineering study conducted for a civil engineer may not fulfill the needs of a construction contractor or even another civil engineer. Because each geotechnical engineering study is unique, each geotechnical engineering report is unique, prepared *solely* for the client. No one except you should rely on your geotechnical engineering report without first conferring with the geotechnical engineer who prepared it. *And no one — not even you* — should apply the report for any purpose or project except the one originally contemplated.

Read the Full Report

Serious problems have occurred because those relying on a geotechnical engineering report did not read it all. Do not rely on an executive summary. Do not read selected elements only.

A Geotechnical Engineering Report Is Based on A Unique Set of Project-Specific Factors

Geotechnical engineers consider a number of unique, project-specific factors when establishing the scope of a study. Typical factors include: the client's goals, objectives, and risk management preferences; the general nature of the structure involved, its size, and configuration; the location of the structure on the site; and other planned or existing site improvements, such as access roads, parking lots, and underground utilities. Unless the geotechnical engineer who conducted the study specifically indicates otherwise, do not rely on a geotechnical engineering report that was:

- not prepared for you,
- not prepared for your project,
- not prepared for the specific site explored, or
- completed before important project changes were made.

Typical changes that can erode the reliability of an existing geotechnical engineering report include those that affect:

- the function of the proposed structure, as when it's changed from a parking garage to an office building, or from a light industrial plant to a refrigerated warehouse,
- elevation, configuration, location, orientation, or weight of the proposed structure,
- composition of the design team, or
- project ownership.

As a general rule, *always* inform your geotechnical engineer of project changes—even minor ones—and request an assessment of their impact. *Geotechnical engineers cannot accept responsibility or liability for problems that occur because their reports do not consider developments of which they were not informed.*

Subsurface Conditions Can Change

A geotechnical engineering report is based on conditions that existed at the time the study was performed. *Do not rely on a geotechnical engineering report* whose adequacy may have been affected by: the passage of time; by man-made events, such as construction on or adjacent to the site; or by natural events, such as floods, earthquakes, or groundwater fluctuations. *Always* contact the geotechnical engineer before applying the report to determine if it is still reliable. A minor amount of additional testing or analysis could prevent major problems.

Most Geotechnical Findings Are Professional Opinions

Site exploration identifies subsurface conditions only at those points where subsurface tests are conducted or samples are taken. Geotechnical engineers review field and laboratory data and then apply their professional judgment to render an opinion about subsurface conditions throughout the site. Actual subsurface conditions may differ—sometimes significantly—from those indicated in your report. Retaining the geotechnical engineer who developed your report to provide construction observation is the most effective method of managing the risks associated with unanticipated conditions.

A Report's Recommendations Are *Not* Final

Do not overrely on the construction recommendations included in your report. *Those recommendations are not final,* because geotechnical engineers develop them principally from judgment and opinion. Geotechnical engineers can finalize their recommendations only by observing actual

subsurface conditions revealed during construction. *The geotechnical engineer who developed your report cannot assume responsibility or liability for the report's recommendations if that engineer does not perform construction observation.*

A Geotechnical Engineering Report Is Subject to Misinterpretation

Other design team members' misinterpretation of geotechnical engineering reports has resulted in costly problems. Lower that risk by having your geotechnical engineer confer with appropriate members of the design team after submitting the report. Also retain your geotechnical engineer to review pertinent elements of the design team's plans and specifications. Contractors can also misinterpret a geotechnical engineering report. Reduce that risk by having your geotechnical engineer participate in prebid and preconstruction conferences, and by providing construction observation.

Do Not Redraw the Engineer's Logs

Geotechnical engineers prepare final boring and testing logs based upon their interpretation of field logs and laboratory data. To prevent errors or omissions, the logs included in a geotechnical engineering report should *never* be redrawn for inclusion in architectural or other design drawings. Only photographic or electronic reproduction is acceptable, *but recognize that separating logs from the report can elevate risk.*

Give Contractors a Complete Report and Guidance

Some owners and design professionals mistakenly believe they can make contractors liable for unanticipated subsurface conditions by limiting what they provide for bid preparation. To help prevent costly problems, give contractors the complete geotechnical engineering report, *but* preface it with a clearly written letter of transmittal. In that letter, advise contractors that the report was not prepared for purposes of bid development and that the report's accuracy is limited; encourage them to confer with the geotechnical engineer who prepared the report (a modest fee may be required) and/or to conduct additional study to obtain the specific types of information they need or prefer. A prebid conference can also be valuable. *Be sure contractors have sufficient time* to perform additional study. Only then might you be in a position to give contractors the best information available to you, while requiring them to at least share some of the financial responsibilities stemming from unanticipated conditions.

Read Responsibility Provisions Closely

Some clients, design professionals, and contractors do not recognize that geotechnical engineering is far less exact than other engineering disciplines. This lack of understanding has created unrealistic expectations that have led to disappointments, claims, and disputes. To help reduce the risk of such outcomes, geotechnical engineers commonly include a variety of explanatory provisions in their reports. Sometimes labeled "limitations" many of these provisions indicate where geotechnical engineers' responsibilities begin and end, to help others recognize their own responsibilities and risks. *Read these provisions closely.* Ask questions. Your geotechnical engineer should respond fully and frankly.

Geoenvironmental Concerns Are Not Covered

The equipment, techniques, and personnel used to perform a *geoenvironmental* study differ significantly from those used to perform a *geotechnical* study. For that reason, a geotechnical engineering report does not usually relate any geoenvironmental findings, conclusions, or recommendations; e.g., about the likelihood of encountering underground storage tanks or regulated contaminants. *Unanticipated environmental problems have led to numerous project failures.* If you have not yet obtained your own geoenvironmental information, ask your geotechnical consultant for risk management guidance. *Do not rely on an environmental report prepared for someone else.*

Obtain Professional Assistance To Deal with Mold

Diverse strategies can be applied during building design, construction, operation, and maintenance to prevent significant amounts of mold from growing on indoor surfaces. To be effective, all such strategies should be devised for the *express purpose* of mold prevention, integrated into a comprehensive plan, and executed with diligent oversight by a professional mold prevention consultant. Because just a small amount of water or moisture can lead to the development of severe mold infestations, a number of mold prevention strategies focus on keeping building surfaces dry. While groundwater, water infiltration, and similar issues may have been addressed as part of the geotechnical engineering study whose findings are conveyed in this report, the geotechnical engineer in charge of this project is not a mold prevention consultant; ***none of the services performed in connection with the geotechnical engineer's study were designed or conducted for the purpose of mold prevention. Proper implementation of the recommendations conveyed in this report will not of itself be sufficient to prevent mold from growing in or on the structure involved.***

Rely, on Your ASFE-Member Geotechncial Engineer for Additional Assistance

Membership in ASFE/The Best People on Earth exposes geotechnical engineers to a wide array of risk management techniques that can be of genuine benefit for everyone involved with a construction project. Confer with you ASFE-member geotechnical engineer for more information.

ASFE
THE BEST PEOPLE ON EARTH

8811 Colesville Road/Suite G106, Silver Spring, MD 20910
Telephone: 301/565-2733 Facsimile: 301/589-2017
e-mail: info@asfe.org www.asfe.org

Copyright 2004 by ASFE, Inc. Duplication, reproduction, or copying of this document, in whole or in part, by any means whatsoever, is strictly prohibited, except with ASFE's specific written permission. Excerpting, quoting, or otherwise extracting wording from this document is permitted only with the express written permission of ASFE, and only for purposes of scholarly research or book review. Only members of ASFE may use this document as a complement to or as an element of a geotechnical engineering report. Any other firm, individual, or other entity that so uses this document without being an ASFE member could be committing negligent or intentional (fraudulent) misrepresentation.

IIGER08041.0MRP

SECTION 02324
TRENCHING

PART 1 - GENERAL

1.1 SUMMARY

A. Section Includes:
1. Excavating trenches for utilities from 5 feet outside buildings to the utility service
2. Compacted fill from top of utility bedding to finished grade elevations
3. Backfilling and compaction

B. Related Sections:

1. Section 02512 - Site Water Distribution: Water piping and bedding from buildings to utility service
2. Section 02538 - Sanitary Sewer System: Sanitary sewer piping and bedding from buildings to utility service

1.2 DEFINITIONS

A. Utility: Any buried pipe, duct, conduit, or cable.

1.3 SUBMITTALS

A. Excavation Protection Plan (Trench Safety): Describe sheeting, shoring, and bracing materials and installation required to protect excavations and adjacent structures and property; include structural calculations to support plan.

1.4 QUALITY ASSURANCE

A. Perform Work in accordance with Texas Commission on Environmental Quality (TCEQ), Chapter 290, Public Water System Rules and/or Chapter 317, Wastewater System Rules.

1.5 QUALIFICATIONS

A. Prepare Excavation Protection Plan (Trench Safety) under the direct supervision of a Professional Engineer experienced in design of this Work and licensed in the State of Texas.

1.6 FIELD MEASUREMENTS

A. Verify field measurements prior to any required fabrications.

1.7 COORDINATION

A. Verify Work associated with lower elevation utilities is complete before placing higher elevation utilities.

B. Coordinate any work in TxDOT Right Of Way with the local TxDOT Area Maintenance Supervisor.

PART 2 - PRODUCTS (Not Used)

PART 3 - EXECUTION

3.1 LINES AND GRADES

A. Lay pipes to lines and grades indicated on Drawings.
   1. Engineer reserves right to make changes in lines, grades, and depths of utilities when changes are required for Project conditions.

B. Use laser-beam instrument with qualified operator to establish lines and grades.

****** [OR] ******

C. Maintain grade alignment of pipe using string line parallel with grade line and vertically above centerline of pipe.
   1. Establish string line on level batter boards at intervals of not more than 25 feet .
   2. Install batter boards spanning trench, rigidly anchored to posts driven into ground on both sides of trench.
   3. Set three adjacent batter boards before laying pipe to verify grades and line.
   4. Determine elevation and position of string line from elevation and position of offset points or stakes located along pipe route.
   5. Do not locate pipe using sidelines for line or grade.

3.2 PREPARATION

A. Call Local Utility Line Information (One Call) service not less than three working days before performing Work.
   1. Request underground utilities to be located and marked within and surrounding construction areas.

B. Identify required lines, levels, contours, and datum locations.

C. Protect plant life and other features remaining as portion of final landscaping.

D. Protect bench marks and paving from excavating equipment and vehicular traffic.

E. Maintain and protect above and below grade utilities indicated to remain.

F. Establish temporary traffic control when trenching is performed in public right-of-way. Relocate controls as required during progress of Work.

3.3 TRENCHING

A. Excavate subsoil required for utilities to utility service.

B. Remove lumped subsoil, boulders, rock, roots and other deleterious material.

C. Do not advance open trench more than 100 feet ahead of installed pipe.

D. Cut trenches to width indicated on Drawings. Remove water or materials that interfere with Work.

E. Excavate bottom of trenches indicated on Drawings.

F. Excavate trenches to depth indicated on Drawings.

G. Remove excess subsoil not intended for reuse, from site.

3.4 SHEETING AND SHORING

A. Sheet, shore, and brace excavations to prevent danger to persons, structures and adjacent properties and to prevent caving, erosion, and loss of surrounding subsoil.

B. Support trenches more than 4 feet deep excavated through unstable, loose, or soft material. Provide sheeting, shoring, bracing, or other protection to maintain stability of excavation in accordance with the Excavation Protection Plan (Trench Safety).

C. Design sheeting and shoring to be removed at completion of excavation work.

D. Repair damage caused by failure of the sheeting, shoring, or bracing and for settlement of filled excavations or adjacent soil.

E. Repair damage to new and existing Work from settlement, water or earth pressure or other causes resulting from inadequate sheeting, shoring, or bracing.

3.5 BACKFILLING

A. Backfill trenches to contours and elevations with clean select fill materials..

B. Place fill material in continuous layers and compact in 8 inch lifts by mechanically tamping. Achieve a minimum of 90% density by means of Ordinary Compaction.

C. Employ placement method that does not disturb or damage utilities in trench.

D. Maintain optimum moisture content of fill materials to attain required compaction density.

E. Do not leave more than 25 feet of trench open at end of working day.

F. Protect open trench to prevent danger to the public and workers on the site.

3.6 PROTECTION OF FINISHED WORK

A. Reshape and re-compact backfilled trenches subjected to settlement and vehicular traffic during construction.

END OF SECTION

SECTION 02362
TERMITE CONTROL

PART 1 - GENERAL

1.1 RELATED DOCUMENTS

A. Drawings and general provisions of the Contract, including General and Supplementary Conditions and Division 1 Specification Sections, apply to this Section.

1.2 SUMMARY

A. This Section includes the following for termite control:
   1. **Non-Chemical System** designed to stop subterranean termites from entering a building by blocking any entrances through the foundation.

1.3 DEFINITIONS

A. EPA: Environmental Protection Agency.

B. PCO: Pest control operator.

1.4 SUBMITTALS

A. Product Data: Manufacturer's descriptive literature, specifications, and installation instructions.

B. Qualification Data: For Installer of termite control products.

C. Warranties: Special warranties specified in this Section.

1.5 QUALITY ASSURANCE

A. Applicator Qualifications: Accredited Installers who have undergone extensive training in both the System as well as understanding the habits of termites in jurisdiction where Project is located and who is experienced and has completed termite control treatment similar to that indicated for this Project and whose work has a record of successful in-service performance.

B. Regulatory Requirements: Formulate and apply termiticides, and label with a Federal registration number, to comply with EPA regulations and authorities having jurisdiction.

1.6 PROJECT CONDITIONS

A. Environmental Limitations: To ensure penetration, do not treat soil that is water saturated or frozen. Do not treat soil while precipitation is occurring. Comply with EPA-Registered Label requirements and requirements of authorities having jurisdiction.

1.7 COORDINATION

A. Coordinate treatment application with excavating, filling, and grading and concreting operations.

1.8 WARRANTY

A. General Warranty: Special warranty specified in this Article shall not deprive Owner of other rights Owner may have under other provisions of the Contract Documents and shall be in addition to, and run concurrent with, other warranties made by Contractor under requirements of the Contract Documents.

B. Special Warranty: Written warranty, signed by Applicator and Contractor certifying that termite control work, consisting will prevent infestation of subterranean termites. If subterranean termite activity or damage is discovered during warranty period, re-treat soil and repair or replace damage caused by termite infestation.

C. Warranty Period: Five years from date of Substantial Completion.

PART 2 - PRODUCTS

2.1 MATERIALS

A. Marine grade stainless steel mesh of a grade not lower than 316 (AISI 31600) made from 0.18 mm diameter wire with mesh openings of 0.66 x 0.45 mm and supplied in widths of 1200 mm and lengths of 30 meters. (47.25 inch x 100 feet).

B. Clamps 301 Stainless Steel.

C. Bonding cement: a specialized bonding cement which bonds the mesh to either concrete, masonry or other termite resistant substrates.

D. Epoxy Resins: Specialized epoxy resins used for bonding of mesh to concrete, masonry, steel and galvanized or zinc alum coated steel substrates.

E. Available Manufacturers: Subject to compliance with requirements, Manufacturers offering products that may be incorporated into the Work include, but are not limited to, the following:
   1. TERMI MESH USA, INC.
   2. Substitutions: Section 01600 - Product Requirements
   3. Others only as approved equivalent by Architect

PART 3 - EXECUTION

3.1 EXAMINATION

A. Examine substrates, areas, and conditions, with Applicator present, for compliance with Manufacturer's requirements, interfaces with earthwork, slab and foundation work, landscaping, and other conditions affecting performance of termite control.
   1. Proceed with application only after unsatisfactory conditions have been corrected.

3.2 PREPARATION

A. General: Comply with the most stringent requirements of authorities having jurisdiction and with Manufacturer's written instructions for preparing substrate. Remove all extraneous sources of wood cellulose and other edible materials such as wood debris, tree stumps and roots, stakes, formwork, and construction waste wood from soil and around foundations.

B. Soil Treatment Preparation: Remove foreign matter and impermeable soil materials that could decrease treatment effectiveness on areas to be treated. Loosen, rake, and level soil to be treated, except previously compacted areas under slabs and footings.

C. Fit filling hose connected to water source at the site with a backflow preventer, complying with requirements of authorities having jurisdiction.

3.3 APPLICATION, GENERAL

A. The System shall be installed in accordance with the Manufacturer's published installation instructions. The system shall only be installed by Installers trained and accredited by Manufacturer.

B. The Manufacturers published instructions shall be strictly adhered to and a copy of the instructions shall be available at all time on the job site during installation.

3.4 TYPICAL INSTALLATION

A. The System will be installed under the slab on ground, in cavity walls, on the outside perimeter of cavity walls, as a cold joint installation between existing structure and over concrete masonry units and new slabs. The mesh is joined by a 10 to 15 mm physical lap joint. This joint will be strengthened by using a hot-glue gun ever 20 inches o.c. along the join.

B. Sealing penetrations through concrete slabs: mesh and clamps system.

END OF SECTION

SECTION 02446
BORING AND JACKING CONDUITS

PART 1 - GENERAL

1.1 SUMMARY

A. Section Includes:
   1. Excavation for approach trenches and pits
   2. Casing pipe
   3. Carrier pipe

B. Related Sections:
   1. Section 02324 - Trenching
   2. Section 02512 - Site Water Distribution

1.2 UNIT PRICE - MEASUREMENT AND PAYMENT

A. Jacked Pipe:
   1. Basis of Measurement: By linear foot measured on invert of jacked pipe from face to face of jacked pipe
   2. Basis of Payment: Includes excavation, jacked pipe, carrier pipe, accessories, tests, and backfill

1.3 REFERENCES

A. ASTM International:
   1. ASTM A53/A53M - Standard Specification for Pipe, Steel, Black and Hot-Dipped, Zinc-Coated, Welded and Seamless

B. American Welding Society:
   1. AWS D1.1 - Structural Welding Code - Steel

C. National Utility Contractors Association:
   1. NUCA - Pipe Jacking & Microtunneling Design Guide
   2. NUCA - Trenchless Excavation Construction Equipment & Methods Manual

1.4 DESIGN REQUIREMENTS

A. Design casing pipe joints of leakproof construction. Design for earth and or other pressures present plus highway H20 loading.
   1. Highway Crossings: Design tunnel for earth and or other pressure loads present, plus AASHTO H20 live loading.

B. Design bracing, backstops, and use jacks of sufficient rating for continuous jacking without stoppage, except for adding pipe sections and as conditions permit, to minimize tendency of ground material to "freeze" around casing pipe.

1.5 SUBMITTALS

A. Section 01330 - Submittal Procedures: Requirements for submittals.

B. Shop Drawings: Prepare scaled shop Drawings to supplement Contract Drawings.
   1. Include details of casing, jacking head, sheeting, and other falsework for trenches and pits, and field sketches, and other details, to complete the Work.
   2. Show cross section or sections from field survey, showing installation in relation to actual profile of ground.

C. Design Data: Submit casing pipe design calculations and Manufacturer's data.

D. Submit history of previous work completed of equivalent nature and scope. Include qualification and experience of key personnel.

E. Installation Plan: Submit description of proposed construction plan, dewatering plan, and plan to establish and maintain vertical and horizontal alignment.

F. Traffic Control Plan in accordance with *Texas Manual on Uniform Traffic Control Devices.*

G. Submit emergency response procedures to handle situations when conduit is compromised and jeopardizes integrity of installation or safety.

1.6 CLOSEOUT SUBMITTALS

A. Project Record Documents: Record actual locations of casing and carrier pipe invert elevations.

B. Identify and describe unexpected variations to subsoil conditions or discovery of uncharted utilities.

1.7 QUALITY ASSURANCE

A. Perform work in accordance with Item 476 TxDOT Standard Specifications for *Construction and Maintenance of Highways, Streets, and Bridges, 2004.*

1.8 QUALIFICATIONS

A. Installer: Company specializing in performing work of this section with minimum 5 years experience.
   1. Work Experience: Include projects of similar magnitude and conditions.
   2. Furnish list of references upon request.

1.9 PRECONSTRUCTION MEETING

A. Section 01300 - Administrative Requirements: Preconstruction meeting.

B. Convene minimum one week prior to commencing work of this section.

1.10 DELIVERY, STORAGE, AND HANDLING

A. Provide temporary end caps and closures on piping and fittings. Maintain in place until installation.

B. Protect piping from entry of foreign materials and water by temporary covers, completing sections of work, and isolating parts of completed system.

C. Accept system components on site in Manufacturer's original containers or configuration. Inspect for damage.

D. Use wooden shipping braces between layers of stacked pipe. Stack piping lengths no more than 3 layers high.

E. Store field joint materials indoors in dry area in original shipping containers. Maintain storage temperature of 60 to 85 degrees F.

F. Support casing and carrier pipes with nylon slings during handling.

1.11 ENVIRONMENTAL REQUIREMENTS

A. Conduct operations so as not to interfere with, interrupt, damage, destroy, or endanger integrity of surface or subsurface structures or utilities, and landscape in immediate or adjacent areas.

1.12 FIELD MEASUREMENTS

A. Verify invert elevations of existing work prior to excavation and installation of casing pipe.

1.13 COORDINATION

A. Section 01300 - Administrative Requirements: Requirements for coordination.

B. Coordinate work with Owner and utilities within construction area.

PART 2 - PRODUCTS

2.1 CASING AND JACKING PIPE MATERIALS

A. Steel Casing Pipe: ASTM A53/A53M, 42,000 psi minimum yield strength, minimum wall thickness of 0.375 inch, full circumference welded joints in accordance with AWS D1.1 to withstand excavation forces.

2.2 CARRIER PIPE MATERIALS

A. Site Water Distribution System Piping: As specified in Section 02512.

2.3 COVER MATERIALS

A. Soil Backfill for Trench Approaches and Pits to Finish Grade: Subsoil with no rocks over 3 inches in diameter, frozen earth or foreign matter.

2.4 ACCESSORIES

A. Supports and Insulators:
   1. Steel and Plastic: 14 gage stainless steel band, 5/16 inch stainless steel flange bolts, heavy duty PVC liner, polyethylene or phenolic skids
   2. Plastic: Polyethylene casing insulator band and skids with stainless steel bolts

B. End Seals for encasement pipe: Neoprene rubber with stainless steel clamps.

PART 3 - EXECUTION

3.1 EXAMINATION

A. Section 01300 - Administrative Requirements: Verification of existing conditions before starting work.

B. Verify connection size and locations are in accordance with Drawings.

3.2 PREPARATION

A. Identify required lines, levels, contours, and datum locations.

B. Locate, identify, and protect utilities indicated to remain from damage.

C. Protect plant life and other features remaining as portion of final landscaping.

D. Protect bench marks, survey control points, existing structures, fences, sidewalks, paving and curbs from excavating equipment and vehicular traffic.

E. Establish temporary traffic control and detours when trenching is performed in public right-of-way in accordance with the *Texas Manual on Uniform Traffic Control Devices*.

F. Establish elevations of casing with not less than 3 ft of cover.

3.3 DEWATERING

A. Intercept and divert surface drainage precipitation and groundwater away from excavation through use of dikes, curb walls, ditches, pipes, sumps or other means.

B. Develop substantially dry subgrade for prosecution of subsequent operations.

C. Comply with TCEQ requirements for dewatering to any watercourse, prevention of stream degradation, and erosion and sediment control.

3.4 PITS OR APPROACH TRENCHES

A. Excavate approach trenches or pits in accordance with installation plan and as site conditions require.

3.5 CASING PIPE INSTALLATION

A. Boring:
   1. Push pipe into ground with boring auger rotating within pipe to remove spoil. Do not advance cutting head ahead of casing pipe except for distance necessary to permit cutting teeth to cut clearance for pipe. Arrange machine bore and cutting head to be removable from within pipe. Arrange face of cutting head to provide barrier to free flow of soft material.
   2. When unstable soil is encountered during boring retract cutting head into casing to permit balance between pushing pressure and ratio of pipe advancement to quantity of soil.
   3. When voids develop greater than outside diameter of pipe by approximately one inch, grout to fill voids.
   4. When boring is obstructed, relocate, jack, or tunnel as directed by Engineer.

B. Jacking:
   1. Construct adequate thrust wall normal to proposed line of thrust.
   2. Impart thrust load to pipe through suitable thrust ring sufficiently rigid to ensure uniform distribution of thrust load on full pipe circumference.

C. Drilling and Jacking:
   1. Use oil field type rock roller bit or plate bit made up of individual roller cutter units solidly welded to pipe which is turned and pushed for its entire length by drilling machine to give bit necessary cutting action.
   2. Inject high density slurry (oil field drilling mud) to head as cutter lubricant. Inject slurry at rear of cutter units to prevent jetting action ahead of pipe.

3.6 PRESSURE GROUTING

A. Pressure grout annular space between casing pipe and surrounding earth.

3.7 CARRIER PIPE INSTALLATION

A. Clean, inspect, and handle pipe in accordance with Section 02512.

B. Place carrier pipe in accordance with Section 02512. Exercise care to prevent damage to pipe joints when carrier pipe is placed in casing.

C. Support pipeline within casing so no external loads are transmitted to carrier pipe. Attach supports to barrel of carrier pipe; do not rest carrier pipe on bells.

D. Grout ends of casing to seal.

3.8 TOLERANCES

A. Do not over cut excavation by more than 1 inch greater than outside diameter of casing pipe.

END OF SECTION

SECTION 02512
SITE WATER DISTRIBUTION

PART 1 – GENERAL

1.1 SUMMARY

A. Section Includes:
   1. Pipe and fittings for site water line.
   2. Valves.

B. Related Sections:
   1. Section 312333 – Trenching and Backfilling.
   2. Section 025160 - Disinfection of Water Distribution: Disinfection of site service utility water piping.
   3. Section 013300 – Submittal Procedures

1.2 LUMP SUM - MEASUREMENT AND PAYMENT

A. Pipe and Fittings:
   1. Provide schedule and cost.

B. Valves and Meter Assemblies:
   1. Provide schedule and cost.

1.3 REFERENCES

A. American Society of Testing Materials
   1. ASTM A 48, Class 30B, Valve box, casing and cover

B. American Water Works Association:
   1. AWWA C-900, SDR-18 (150 psi) Water Pipe
   2. AWWA C-110 Ductile Iron Fittings.
   3. AWWA C-153 Compressed Ductile Iron Fittings
   4. AWWA C- 509 Iron-Body Gate Valves
   5. AWWA C-800 Bronze (Brass) Ball Valves

1.4 SUBMITTALS

A. Section 013300 - Submittal Procedures: Requirements for submittals.

B. Product Data: Submit data on pipe materials, pipe fittings, valves and accessories.

1.5 CLOSEOUT SUBMITTALS

A. Project Record Documents: Record actual locations of piping, valves and connections.

B. Identify and describe unexpected variations to subsoil conditions or discovery of uncharted utilities.

1.6 QUALITY ASSURANCE

A. Perform Work in accordance with Texas Commission on Environmental Quality (TCEQ), Chapter 290, Public Water Rules and Regulations.

B. Valves: Manufacturer's name and pressure rating marked on valve body.

1.7 DELIVERY, STORAGE, AND HANDLING

A. Deliver and store valves in shipping containers with labeling in place.

PART 2 - PRODUCTS

2.1 WATER PIPING

A. Water lines less than 2 inches
   1. Shall be Type K copper
   2. Rated working pressure of 150psi

B. Water lines 2 inches but less than 4 inches
   1. Shall be Type K copper or
   2. Gasketed PVC Schedule 40 or 80 (Glued joints are not acceptable)
      a. Pipe: ASTM D1785
      b. Fittings: ASTM D2466

C. Water lines 4 inches and greater:
   1. Shall be AWWA C-900, SDR-18 or SDR-14
      a. Fittings: AWWA C-110 or AWWA C-153
   2. Shall be Ductile Iron, puch-on or mechanical joint pipe (AWWA C-151) when line is placed in fill material (not in-situ excavation)

2.2 GATE VALVES

A. Four (4) inches and Larger: AWWA C509, Iron body, bronze trim, non-rising stem with square nut, single wedge, resilient seat, mechanical joint ends, extension box and valve key.

2.3 BALL VALVES

A. Less than four (4) inches: AWWA C800, Brass body, teflon coated brass ball, rubber seats and stem seals, compression inlet end, compression outlet, extension box and valve key.

2.4 VALVE BOXES

A. All valves will be placed in a valve box
   1. Gate Valves

a. Cast iron valve boxes for buried valves, 2 section adjustable screw type, suitable for depth of cover, with base, top section and cast iron lid.
b. At least 5 inches in diameter, 3/16 inch thick, with suitable cast iron bases and covers.
c. Coat valve boxes and covers by dipping in hot bituminous varnish.

B. Ball Valves
1. Precast concrete valve or meter boxes for buried valves, suitable for depth of cover, with cast iron lid.

C. Locking type covers
1. Identify covers with casting mark “WATER”
2. Contractor shall provide owner with appropriate valve keys.

D. Valves will be placed on pea gravel.

2.5 UNDERGROUND PIPE MARKERS

A. Trace Wire
1. All non-metallic pipe shall be loosely wrapped with magnetic detectable conductor
a. Red-insulated No. 10 standard copper wire for tracing purposes (2 turns per 5 feet). The tracer wire shall be brought to the surface at all manholes and cleanout risers with 2 turns per foot of pipe length around the cleanout risers.

PART 3 - EXECUTION

3.1 EXAMINATION

A. Section 013000 - Administrative Requirements: Verification of existing conditions before starting work.

3.2 PREPARATION

A. Cut pipe ends square, ream pipe and tube ends to full pipe diameter, remove burrs.

B. Remove scale and dirt on inside and outside before assembly.

3.3 INSTALLATION - PIPE

A. All tees, bends, etc. will have restrained joints or be blocked.

B. Install access fittings to permit disinfection of water system performed under Section 025160.

C. Install trace wire on all plastic pipe.

D. Provide a building shut-off valve and valve box on all water services to buildings.

3.4 INSTALLATION - VALVES AND HYDRANTS

A. Set valves on pea gravel.

B. Center and plumb valve box over valve. Set box cover flush with finished grade and provide a concrete collar as shown in Drawings.

3.5 TRENCH SAFETY SYSTEMS

A. If required, contractor shall be responsible for providing Trench Safety Systems in accordance with current State and OSHA regulations.

3.6 FIELD QUALITY CONTROL

A. Perform pressure test on domestic site water distribution system in accordance with AWWA C-605.

END OF SECTION

SECTION 02516
DISINFECTION OF WATER DISTRIBUTION

PART 1 – GENERAL

1.1 SUMMARY

A. Section includes disinfection of potable water distribution [and transmission] system; and testing and reporting results.

B. Related Sections:

1. Section 025120 - Site Water Distribution Product and Execution requirements for installation, testing, of site domestic water distribution piping.

1.2 REFERENCES

A. American Water Works Association:
1. AWWA B300 - Hypochlorites.
2. AWWA B302 - Ammonium Sulfate.
3. AWWA B303 - Sodium Chlorite.
4. AWWA C651 - Disinfecting Water Mains.

1.3 SUBMITTALS

A. Section 013300 - Submittal Procedures: Requirements for submittals.

B. Product Data: Submit procedures, proposed chemicals, and treatment levels for review.

C. Test Reports: Indicate results comparative to specified requirements.

D. Certificate: Certify cleanliness of water distribution system meets or exceeds TCEQ Chapter 290 requirements.

1.4 CLOSEOUT SUBMITTALS

A. Disinfection Report:
1. Type and form of disinfectant used.
2. Date and time of disinfectant injection start and time of completion.
3. Test locations.
4. Name of person collecting samples.
5. Initial and 24 hour disinfectant residuals in treated water in ppm for each outlet tested.
6. Date and time of flushing start and completion.
7. Disinfectant residual after flushing in ppm for each outlet tested.

B. Bacteriological Report:
1. Date issued, project name, and testing laboratory name, address, and telephone number.

2. Time and date of water sample collection.
3. Name of person collecting samples.
4. Test locations.
5. Initial and 24 hour disinfectant residuals in ppm for each outlet tested.
6. Coliform bacteria test results for each outlet tested.
7. Certify water conforms, or fails to conform, to bacterial standards of TCEQ.

1.5 QUALITY ASSURANCE

A. Perform Work in accordance with AWWA C651.

1.6 QUALIFICATIONS

A. Testing Firm: Company specializing in testing potable water systems, approved by State of Texas.

B. Submit bacteriologist's signature and authority associated with testing.

PART 2 - PRODUCTS

2.1 DISINFECTION CHEMICALS

A. Chemicals: AWWA B300, Hypochlorite, AWWA B302, Ammonium Sulfate, and AWWA B303, Sodium Chlorite.

PART 3 - EXECUTION

3.1 EXAMINATION

A. Section 013000 - Administrative Requirements: Verification of existing conditions before starting work.

B. Verify piping system has been cleaned, inspected, and pressure tested.

C. Perform scheduling and disinfecting activity with start-up, water pressure testing, adjusting and balancing, demonstration procedures, including coordination with related systems.

3.2 INSTALLATION

A. Provide and attach required equipment to perform the Work of this section.

B. Perform disinfection of water distribution system and installation of system and pressure testing. Refer to Section 025120.

C. Inject treatment disinfectant into piping system.

D. Maintain disinfectant in system for 24 hours.

E. Flush, circulate, and clean until required cleanliness is achieved; use domestic water.

F. Replace permanent system devices removed for disinfection.

3.3 FIELD QUALITY CONTROL

A. Disinfection, Flushing, and Sampling:
   1. Disinfect pipeline installation in accordance with AWWA C651. Use of liquid chlorine is not permitted
   2. Upon completion of retention period required for disinfection, flush pipeline until chlorine concentration in water leaving pipeline is no higher than that generally prevailing in existing system or is acceptable for domestic use.
   3. Legally dispose of chlorinated water. When chlorinated discharge may cause damage to environment, apply neutralizing chemical to chlorinated water to neutralize chlorine residual remaining in water.
   4. After final flushing and before pipeline is connected to existing system, or placed in service, employ an approved independent testing laboratory to sample, test and certify water quality suitable for human consumption.

END OF SECTION

SECTION 02538
SANITARY SEWER SYSTEM

PART 1 - GENERAL

1.1 SUMMARY

A. Section Includes:
   1. Sanitary sewage pipe.
   2. Manholes.
   3. Bedding and cover materials.

B. Related Sections:
   1. Section 312333 – Trenching and Backfilling

1.2 REFERENCES

A. ASTM International:
   1. ASTM A48, Manhole Rings and covers (32” diameter covers) Gray Cast or ASTM A536, Ductile Iron.
   2. ASTM D1785 - Standard Specification for Poly (Vinyl Chloride) (PVC) Plastic Pipe, Schedules 40, 80, and 120.
   3. ASTM D2466 - Standard Specification for Poly(Vinyl Chloride) (PVC) Plastic Pipe Fittings, Schedule 40.
   4. ASTM D2564 - Standard Specification for Solvent Cements for Poly (Vinyl Chloride) (PVC) Plastic Piping Systems.
   5. ASTM D2855 - Standard Practice for Making Solvent-Cemented Joints with Poly (Vinyl Chloride) (PVC) Pipe and Fittings.
   6. ASTM D3034 - Standard Specification for Type PSM Poly (Vinyl Chloride) (PVC) Sewer Pipe and Fittings.
   7. ASTM F477 - Standard Specification for Elastomeric Seals (Gaskets) for Joining Plastic Pipe.

1.3 DEFINITIONS

A. Bedding: Fill placed under, beside and directly over pipe, prior to subsequent backfill operations.

1.4 SUBMITTALS

A. Section 013300 - Submittal Procedures: Requirements for submittals.

B. Product Data: Submit data indicating pipe material used, pipe accessories, and manhole frames and covers.

1.5 CLOSEOUT SUBMITTALS

A. Section 017000 - Execution Requirements: Requirements for submittals.

B. Project Record Documents: Record location of pipe runs, connections, manholes, and invert elevations.

1.6 QUALITY ASSURANCE

A. Perform Work in accordance with Texas Commission on Environmental Quality (TCEQ), Chapter 217, Wastewater systems.

1.7 PRE-INSTALLATION MEETINGS

A. Section 013000 - Administrative Requirements: Pre-installation meeting.

1.8 FIELD MEASUREMENTS

A. Verify field measurements and elevations as indicated on Drawings.

1.9 COORDINATION

A. Section 013000 - Administrative Requirements: Coordination and project conditions.

B. Coordinate the Work with termination of sanitary sewer connection outside buildings, and connection to municipal sewer utility service.

PART 2 - PRODUCTS

2.1 SANITARY SEWAGE PIPE

A. Plastic Pipe: ASTM D3034, Type PSM, Poly (Vinyl Chloride) (PVC) material
1. Gasketed PVC SDR 26
2. Bell and spigot style rubber ring sealed gasket joint.
3. Fittings: PVC SDR 26
4. Joints: ASTM F477, elastomeric gaskets.

2.2 MANHOLES

A. Manhole Lid and Frame Manufacturers:
1. East Jordan Iron Works (formerly Western Iron Works), San Angelo, Texas.

B. Manhole Lid and Frame:
1. Construction: Cast iron ring and ductile iron cover.
2. Lid Design: Marked "SEWER"

C. Shaft Construction and Concentric Cone Top Section:
1. Shaft – 24" ASTM C76 Class III sewer pipe of standard precast riser
2. Top Section – Standard precast riser

D. Base Pad: Cast-In-Place concrete (Class A, 3000 psi), leveled top surface to receive concrete shaft sections, sleeved to receive sanitary sewer pipe sections.

2.3 CLEANOUTS

A. Cleanouts shall be provided at the ends of services, at bends each way, and inline at a spacing not to exceed 50 feet.

B. Cleanouts in paved surfaces shall have a cast iron boot and lid, a concrete collar, and will match the paved surface elevation. Cleanouts in non-paved surfaces will have a concrete collar and may match the finished surface.

2.4 BEDDING AND COVER MATERIALS

A. Bedding:
1. Trenched in silts, sands, clays, or a combination thereof – Provide either washed sand or washed pea gravel.
2. Trenched in rock – Provide a course aggregate bedding of clean gravel, crushed gravel or crushed limestone. Provide a size gradation for the materials specified.

B. Soil Backfill from Above Bedding to Finish Grade: Select compacted (Subsoil with no rocks over 2 inches in diameter, frozen earth or foreign matter.)

PART 3 - EXECUTION

3.1 EXAMINATION

A. Section 013000 - Administrative Requirements: Verification of existing conditions before starting work.

B. Verify trench cut is ready to receive work and excavations, dimensions, and elevations are as indicated on drawings.

3.2 PREPARATION

A. Correct over excavation with fine aggregate or sand.

B. Remove large stones or other hard matter which could damage pipe or impede consistent backfilling or compaction.

3.3 BEDDING

A. Excavate pipe trench in accordance with Section 312333.

B. Place bedding material at trench bottom, level materials in continuous layer not exceeding 6 inches.

C. Maintain optimum moisture content of bedding material to attain required compaction density.

3.4 INSTALLATION - PIPE

A. Lay pipe to slope gradients noted on drawings; with maximum variation from indicated slope of 0.1 %.

B. Install bedding at sides and over top of pipe to minimum compacted thickness of 12 inches.

C. Refer to Section 312333 for backfilling and compacting requirements. Do not displace or damage pipe when compacting.

D. Install site sanitary sewage system piping to 5 feet of building. Provide a cleanout 5 feet from building on all laterals.

E. Sanitary sewer system will be installed according to TCEQ TAC 30 Ch 217 in its entirety. Water and wastewater separation distances and crossings will be in compliance with TCEQ rules.

3.5 INSTALLATION - MANHOLES

A. Excavate for manholes.

B. Form bottom of excavation clean and smooth to correct elevation.

C. Form and place cast-in-place concrete base pad, with provision for sanitary sewer pipe end sections.

D. Establish elevations and pipe inverts for inlets and outlets as indicated on Drawings.

E. Mount lid and frame level in grout, secured to top cone section to elevation indicated. Manholes should be raised to match paved surfaces and should be a minimum of 3 inches above non-paved surfaces.

3.6 FIELD QUALITY CONTROL

A. Perform test on site sanitary sewage system in accordance with TCEQ rules.

3.7 PROTECTION OF FINISHED WORK

A. Section 017000 - Execution Requirements: Requirements for protecting finished Work.

B. Protect pipe and aggregate cover from damage or displacement until backfilling operation is in progress.

END OF SECTION

SECTION 02741
HOT-MIX ASPHALT PAVING / STRIPING

PART 1 - GENERAL

1.1 RELATED DOCUMENTS

A. Drawings and general provisions of the Contract, including General and Supplementary Conditions and Division 1 Specification Sections, apply to this Section.

1.2 SUMMARY

A. This Section includes the following:
   1. Hot-mix asphalt paving
   2. Pavement-marking paint

B. Related Sections include the following:
   1. Division 2 Section "Earthwork" for aggregate sub-base and base courses and for aggregate pavement shoulders
   2. Division 2 Section "Pavement Joint Sealants" for joint sealants and fillers at paving terminations

1.3 DEFINITIONS

A. Hot-Mix Asphalt Paving Terminology: Refer to ASTM D 8 for definitions of terms.

B. TxDOT: Texas Department of Transportation.

1.4 SYSTEM DESCRIPTION

A. Provide hot-mix asphalt paving according to materials, workmanship, and other applicable requirements of standard specifications of TxDOT.
   1. Standard Specification: See 340, Hot Mix Asphaltic Concrete Pavement, and any related items, of the Standard Specifications for Construction and Maintenance of Highways, Streets, and Bridges (2004).
   2. Measurement and payment provisions and safety program submittals included in standard specifications do not apply to this Section.

1.5 SUBMITTALS

A. Product Data: For each type of product indicated. Include technical data and tested physical and performance properties.

B. Job-Mix Designs: Certification, by authorities having jurisdiction, of approval of each job mix proposed for the Work.

C. Job-Mix Designs: For each job mix proposed for the Work.

D. Material Test Reports: For each paving material.

E. Material Certificates: For each paving material, signed by Manufacturers.

1.6 QUALITY ASSURANCE

A. Manufacturer Qualifications: A qualified Manufacturer.
   1. Manufacturer shall be a paving-mix Manufacturer registered with and approved by authorities having jurisdiction or TxDOT.

B. Testing Agency Qualifications: Qualified according to ASTM D 3666 for testing indicated, as documented according to ASTM E 548.

C. Regulatory Requirements: Comply with TxDOT specifications previously referenced for asphalt paving work.

D. Asphalt-Paving Publication: Comply with AI MS-22, "Construction of Hot Mix Asphalt Pavements," unless more stringent requirements are indicated.

1.7 DELIVERY, STORAGE, AND HANDLING

A. Deliver pavement-marking materials to Project site in original packages with seals unbroken and bearing Manufacturer's labels containing brand name and type of material, date of manufacture, and directions for storage.

B. Store pavement-marking materials in a clean, dry, protected location within temperature range required by Manufacturer. Protect stored materials from direct sunlight.

1.8 PROJECT CONDITIONS

A. Environmental Limitations: Do not apply asphalt materials if subgrade is wet or excessively damp or if the following conditions are not met:
   1. Prime and Tack Coats: Minimum surface temperature of 60 deg F (15.5 deg C)
   2. Asphalt Base Course: Minimum surface temperature of 40 deg F (4 deg C) and rising at time of placement
   3. Asphalt Surface Course: Minimum surface temperature of 60 deg F (15.5 deg C) at time of placement

B. Pavement-Marking Paint: Proceed with pavement marking only on clean, dry surfaces and at a minimum ambient or surface temperature of 40 deg F (4 deg C) for oil-based materials, 50 deg F (10 deg C) for water-based materials, and not exceeding 95 deg F (35 deg C).

PART 2 - PRODUCTS

2.1 AGGREGATES

A. Must comply with previously referenced TxDOT specifications.

2.2 ASPHALT MATERIALS

A. Must comply with previously referenced TxDOT specifications.

2.3 AUXILIARY MATERIALS

A. Must comply with previously referenced TxDOT specifications.

2.4 MIXES

A. Must comply with previously referenced TxDOT specifications.

PART 3 - EXECUTION

3.1 EXAMINATION

A. Must comply with previously referenced TxDOT specifications.

3.2 SURFACE PREPARATION

A. Must comply with previously referenced TxDOT specifications.

3.3 HOT-MIX ASPHALT PLACING

A. Must comply with previously referenced TxDOT specifications.

3.4 JOINTS

A. Must comply with previously referenced TxDOT specifications.

3.5 COMPACTION

A. Must comply with previously referenced TxDOT specifications.

3.6 INSTALLATION TOLERANCES

A. Must comply with previously referenced TxDOT specifications.

3.7 PAVEMENT MARKING

A. Do not apply pavement-marking paint until layout, colors, and placement have been verified with Architect.

B. Allow paving to age for 30 days before starting pavement marking.

C. Sweep and clean surface to eliminate loose material and dust.

D. Apply paint with mechanical equipment to produce pavement markings, of dimensions indicated, with uniform, straight edges. Apply at Manufacturer's recommended rates to provide a minimum wet film thickness of 15 mils (0.4 mm).

3.8 FIELD QUALITY CONTROL

A. Testing Agency: Contractor will engage and pay a qualified independent testing and inspecting agency to perform field tests and inspections and to prepare test reports.

1. Testing agency will conduct and interpret tests and state in each report whether tested Work complies with or deviates from specified requirements.

B. Additional testing and inspecting, at Contractor's expense, will be performed to determine compliance of replaced or additional work with specified requirements.

C. Thickness: In-place compacted thickness of hot-mix asphalt courses will be determined according to the previously referenced TxDOT Specifications.

D. Surface Smoothness: Finished surface of each hot-mix asphalt course will be tested for compliance with smoothness tolerances.

E. In-Place Density: Testing agency will take samples of uncompacted paving mixtures and compacted pavement according to previously referenced TxDOT specifications.

F. Remove and replace or install additional hot-mix asphalt where test results or measurements indicate that it does not comply with specified requirements.

END OF SECTION

SECTION 02751
CEMENT CONCRETE

PART 1 - GENERAL

1.1 RELATED DOCUMENTS

A. Drawings and general provisions of the Contract, including General and Supplementary Conditions and Division 1 Specification Sections, apply to this Section.

1.2 SUMMARY

A. This Section includes exterior cement concrete for the following:
   1. Curbs and gutters
   2. Sidewalks
   3. Retaining walls

B. Related Sections include the following:
   1. Division 2 Section "Earthwork" for subgrade preparation, grading, and sub-base course
   2. Division 2 Section "Pavement Joint Sealants" for joint sealants within concrete pavement and at isolation joints of concrete pavement with adjacent construction
   3. Division 3 Section "Cast-in-Place Concrete" for general building applications of concrete

1.3 DEFINITIONS

A. Cementitious Materials: Portland cement alone or in combination with one or more of blended hydraulic cement, expansive hydraulic cement, fly ash and other pozzolans, ground granulated blast-furnace slag, and silica fume.

1.4 SUBMITTALS

A. Design Mixes: For each concrete mix. Include alternate mix designs when characteristics of materials, project conditions, weather, test results, or other circumstances warrant adjustments.

B. Material Test Reports: From a qualified testing agency indicating and interpreting test results for compliance of the following with requirements indicated, based on comprehensive testing of current materials:
   1. Cementitious materials and aggregates
   2. Steel reinforcement and reinforcement accessories
   3. Admixtures
   4. Curing compounds
   5. Bonding agent or adhesive
   6. Joint fillers

1.5 QUALITY ASSURANCE

A. Installer Qualifications: An experienced Installer who has completed work similar in material, design, and extent to that indicated for this Project and whose work has resulted in construction with a record of successful in-service performance.

B. Manufacturer Qualifications: Manufacturer of ready-mixed concrete products complying with ASTM C 94 requirements for production facilities and equipment.
   1. Manufacturer must be certified according to the National Ready Mix Concrete Association's Plant Certification Program.

C. Testing Agency Qualifications: An independent testing agency, acceptable to authorities having jurisdiction, qualified according to ASTM C 1077 and ASTM E 329 to conduct the testing indicated, as documented according to ASTM E 548.

D. Source Limitations: Obtain each type or class of cementitious material of the same brand from the same Manufacturer's plant and each aggregate from one source.

E. ACI Publications: Comply with ACI 301, "Specification for Structural Concrete," unless modified by the requirements of the Contract Documents.

F. Concrete Testing Service: Owner will engage a qualified independent testing agency to perform material evaluation tests and to design concrete mixes.

1.6 PROJECT CONDITIONS

A. Traffic Control: Maintain access for vehicular and pedestrian traffic as required for other construction activities.

PART 2 - PRODUCTS

2.1 FORMS

A. Form Materials: Plywood, metal, metal-framed plywood, or other approved panel-type materials to provide full-depth, continuous, straight, smooth exposed surfaces.
   1. Use flexible or curved forms for curves of a radius 100 feet (30.5 m) or less.

B. Form-Release Agent: Commercially formulated form-release agent that will not bond with, stain, or adversely affect concrete surfaces and will not impair subsequent treatments of concrete surfaces.

2.2 STEEL REINFORCEMENT

A. Reinforcement Bars: ASTM A 615/A 615M, Grade 60 (Grade 420), deformed

B. Steel Bar Mats: ASTM A 184/A 184M; with ASTM A 615/A 615M, Grade 60 (Grade 420), deformed bars; assembled with clips

C. Plain Steel Wire: ASTM A 82, as drawn

D. Epoxy-Coated Wire: ASTM A 884/A 884M, Class A coated, plain steel

E. Joint Dowel Bars: Plain steel bars, ASTM A 615/A 615M, Grade 60 (Grade 420). Cut bars true to length with ends square and free of burrs.

F. Bar Supports: Bolsters, chairs, spacers, and other devices for spacing, supporting, and fastening reinforcement bars, welded wire fabric, and dowels in place. Manufacture bar supports according to CRSI's "Manual of Standard Practice" from steel wire, plastic, or pre-cast concrete or fiber-reinforced concrete of greater compressive strength than concrete, and as follows:
1. Equip wire bar supports with sand plates or horizontal runners where base material will not support chair legs.

G. Epoxy Repair Coating: Liquid two-part epoxy repair coating, compatible with epoxy coating on reinforcement.

2.3 CONCRETE MATERIALS

A. General: Use the same brand and type of cementitious material from the same Manufacturer throughout the Project.

B. Portland cement: ASTM C 150, Type I or II.
1. Fly Ash: ASTM C 618, Class F or C

C. Aggregate: ASTM C 33, uniformly graded, from a single source, with coarse aggregate as follows:Class: 4M.
1. Maximum Aggregate Size: 1 inch (25 mm) nominal
2. Do not use fine or coarse aggregates containing substances that cause spalling.

D. Water: ASTM C 94.

2.4 ADMIXTURES

A. General: Admixtures certified by Manufacturer to contain not more than 0.1 percent water-soluble chloride ions by mass of cement and to be compatible with other admixtures.

B. Air-Entraining Admixture: ASTM C 260.

2.5 CURING MATERIALS

A. Absorptive Cover: AASHTO M 182, Class 2, burlap cloth made from jute or kenaf, weighing approximately 9 oz./sq. yd. (305 g/sq. m) dry.

B. Moisture-Retaining Cover: ASTM C 171, polyethylene film or white burlap-polyethylene sheet.

C. Water: Potable.

D. Evaporation Retarder: Waterborne, monomolecular film forming, manufactured for application to fresh concrete.

E. Clear Solvent-Borne Liquid-Membrane-Forming Curing Compound: ASTM C 309, Type 1, Class B.

F. Available Products: Subject to compliance with requirements, products that may be incorporated into the Work include, but are not limited to, the following:

1. Evaporation Retarder:
   a. Cimfilm; Axim Concrete Technologies
   b. Finishing Aid Concentrate; Burke Group, LLC (The)
   c. Spray-Film; ChemMasters
   d. Aquafilm; Conspec Marketing & Manufacturing Co., Inc.
   e. Sure Film; Dayton Superior Corporation
   f. Eucobar; Euclid Chemical Co.
   g. Vapor Aid; Kaufman Products, Inc.
   h. Lambco Skin; Lambert Corporation
   i. E-Con; L&M Construction Chemicals, Inc.
   j. Confilm; Master Builders, Inc.
   k. Waterhold; Metalcrete Industries
   l. Rich Film; Richmond Screw Anchor Co.
   m. SikaFilm; Sika Corporation
   n. Finishing Aid; Symons Corporation
   o. Certi-Vex EnvioAssist; Vexcon Chemicals, Inc.

2. Clear Solvent-Borne Liquid-Membrane-Forming Curing Compound:
   a. AH Curing Compound #2 DR; Anti-Hydro International, Inc.
   b. Res-X Cure All Resin; Burke Group, LLC (The)
   c. RX Cure; Conspec Marketing & Manufacturing Co., Inc.
   d. Day-Chem Rez Cure; Dayton Superior Corporation
   e. Kurez DR; Euclid Chemical Co.
   f. Nitocure S; Fosroc
   g. #64 Resin Cure; Lambert Corporation
   h. L&M Cure DR; L&M Construction Chemicals, Inc.
   i. 3100-Clear; W. R. Meadows, Inc.
   j. Seal N Kure FDR; Metalcrete Industries
   k. Rich Cure; Richmond Screw Anchor Co.
   l. Resi-Chem C309; Symons Corporation
   m. Horncure 30; Tamms Industries Co., Div. of LaPorte Construction Chemicals North America, Inc.
   n. Uni Res 150; Unitex
   o. Certi-Vex RC; Vexcon Chemicals, Inc.

2.6 RELATED MATERIALS

A. Expansion- and Isolation-Joint-Filler Strips: ASTM D 1751, asphalt-saturated cellulosic fiber.

B. Expansion- and Isolation-Joint-Filler Strips: ASTM D 1752, cork or self-expanding cork.

C. Expansion- and Isolation-Joint-Filler Strips: ASTM D 1751, asphalt-saturated cellulosic fiber, or ASTM D 1752, cork or self-expanding cork.

D. Bonding Agent: ASTM C 1059, Type II, non-redispersible, acrylic emulsion or styrene butadiene.

E. Epoxy Bonding Adhesive: ASTM C 881, two-component epoxy resin, capable of humid curing and bonding to damp surfaces, of class and grade to suit requirements, and as follows:
1. Type II, non-load bearing, for bonding freshly mixed concrete to hardened concrete
2. Types I and II, non-load bearing, for bonding hardened or freshly mixed concrete to hardened concrete
3. Types IV and V, load bearing, for bonding hardened or freshly mixed concrete to hardened concrete

F. Available Products: Subject to compliance with requirements.

2.7 CONCRETE MIXES

A. Prepare design mixes, proportioned according to ACI 211.1 and ACI 301, for each type and strength of normal-weight concrete determined by either laboratory trial mixes or field experience.

B. Owner will hire a qualified independent testing agency for preparing and reporting proposed mix designs for the trial batch method.

C. Proportion mixes to provide concrete with the following properties:
1. Compressive Strength (28 Days): 3500 psi (24.1 MPa)
2. Maximum Water-Cementitious Materials Ratio: 0.50
3. Slump Limit: 4 inches (100 mm)

D. Cementitious Materials: Limit percentage, by weight, of cementitious materials other than Portland cement in concrete as follows:
1. Fly Ash: 20 percent
2. Combined Fly Ash and Pozzolan: 20 percent

E. Add air-entraining admixture at Manufacturer's prescribed rate to result in concrete at point of placement having an air content of 2.5 to 4.5 percent.

F. Add air-entraining admixture at Manufacturer's prescribed rate to result in concrete at point of placement having an air content as follows within a tolerance of plus or minus 1.5 percent:
1. Air Content: 5.5 percent for 1-1/2-inch (38-mm) maximum aggregate
2. Air Content: 6.0 percent for 1-inch (25-mm) maximum aggregate
3. Air Content: 6.0 percent for 3/4-inch (19-mm) maximum aggregate

2.8 CONCRETE MIXING

A. Ready-Mixed Concrete: Comply with requirements and with ASTM C 94.

PART 3 - EXECUTION

3.1 PREPARATION

A. Proof-roll prepared sub-base surface to check for unstable areas and verify need for additional compaction. Proceed with pavement only after nonconforming conditions have been corrected and subgrade is ready to receive pavement.

B. Remove loose material from compacted sub-base surface immediately before placing concrete.

3.2 EDGE FORMS AND SCREED CONSTRUCTION

A. Set, brace, and secure edge forms, bulkheads, and intermediate screed guides for pavement to required lines, grades, and elevations. Install forms to allow continuous progress of work and so forms can remain in place at least 24 hours after concrete placement.

B. Clean forms after each use and coat with form release agent to ensure separation from concrete without damage.

3.3 STEEL REINFORCEMENT

A. General: Comply with CRSI's "Manual of Standard Practice" for fabricating reinforcement and with recommendations in CRSI's "Placing Reinforcing Bars" for placing and supporting reinforcement.
   1. Apply epoxy repair coating to uncoated or damaged surfaces of epoxy-coated reinforcement.

B. Clean reinforcement of loose rust and mill scale, earth, ice, or other bond-reducing materials.

C. Arrange, space, and securely tie bars and bar supports to hold reinforcement in position during concrete placement. Maintain minimum cover to reinforcement.

D. Install fabricated bar mats in lengths as long as practicable. Handle units to keep them flat and free of distortions. Straighten bends, kinks, and other irregularities, or replace units as required before placement. Set mats for a minimum 2-inch (50-mm) overlap to adjacent mats.

3.4 JOINTS

A. General: Construct construction, isolation, and contraction joints and tool edgings true to line with faces perpendicular to surface plane of concrete. Construct transverse joints at right angles to centerline, unless otherwise indicated.
   1. When joining existing pavement, place transverse joints to align with previously placed joints, unless otherwise indicated.

B. Construction Joints: Set construction joints at side and end terminations of pavement and at locations where pavement operations are stopped for more than one-half hour, unless pavement terminates at isolation joints.

1. Provide preformed galvanized steel or plastic keyway-section forms or bulkhead forms with keys, unless otherwise indicated. Embed keys at least 1-1/2 inches (38 mm) into concrete.
2. Continue reinforcement across construction joints, unless otherwise indicated. Do not continue reinforcement through sides of pavement strips, unless otherwise indicated.
3. Provide tie bars at sides of pavement strips where indicated.
4. Use a bonding agent at locations where fresh concrete is placed against hardened or partially hardened concrete surfaces.
5. Use epoxy bonding adhesive at locations where fresh concrete is placed against hardened or partially hardened concrete surfaces.

C. Isolation Joints: Form isolation joints of preformed joint-filler strips abutting concrete curbs, catch basins, manholes, inlets, structures, walks, other fixed objects, and where indicated.
1. Locate expansion joints at intervals of 50 feet (15.25 m), unless otherwise indicated.
2. Extend joint fillers full width and depth of joint.
3. Terminate joint filler less than 1/2 inch (12 mm) or more than 1 inch (25 mm) below finished surface if joint sealant is indicated, or as suggested by Manufacturer.
4. Place top of joint filler flush with finished concrete surface if joint sealant is not indicated.
5. Furnish joint fillers in one-piece lengths. Where more than one length is required, lace or clip joint-filler sections together.
6. Protect top edge of joint filler during concrete placement with metal, plastic, or other temporary preformed cap. Remove protective cap after concrete has been placed on both sides of joint.

D. Install dowel bars and support assemblies at joints where indicated. Lubricate or asphalt-coat one-half of dowel length to prevent concrete bonding to one side of joint.

E. Contraction Joints: Form weakened-plane contraction joints, sectioning concrete into areas as indicated. Construct contraction joints for a depth equal to at least one-fourth of the concrete thickness, as follows:
1. Grooved Joints: Form contraction joints after initial floating by grooving and finishing each edge of joint with groover tool to the following radius. Repeat grooving of contraction joints after applying surface finishes. Eliminate groover marks on concrete surfaces.
   a. Radius: 1/4 inch (6 mm)
2. Sawed Joints: Form contraction joints with power saws equipped with shatter-proof abrasive or diamond-rimmed blades. Cut 1/8-inch- (3-mm-) wide joints into concrete when cutting action will not tear, abrade, or otherwise damage surface and before developing random contraction cracks.

F. Edging: Tool edges of pavement, gutters, curbs, and joints in concrete after initial floating with an edging tool to the following radius. Repeat tooling of edges after applying surface finishes. Eliminate tool marks on concrete surfaces.
1. Radius: 1/4 inch (6 mm)

3.5 CONCRETE PLACEMENT

A. Inspection: Before placing concrete, inspect and complete formwork installation, reinforcement steel, and items to be embedded or cast in. Notify other trades to permit installation of their work.

B. Remove snow, ice, or frost from sub-base surface and reinforcement before placing concrete. Do not place concrete on frozen surfaces.

C. Moisten sub-base to provide a uniform dampened condition at the time concrete is placed. Do not place concrete around manholes or other structures until they are at the required finish elevation and alignment.

D. Comply with requirements and with recommendations in ACI 304R for measuring, mixing, transporting, and placing concrete.

E. Do not add water to concrete during delivery, at Project site, or during placement.

F. Deposit and spread concrete in a continuous operation between transverse joints. Do not push or drag concrete into place or use vibrators to move concrete into place.

G. Consolidate concrete by mechanical vibrating equipment supplemented by hand-spading, rodding, or tamping. Use equipment and procedures to consolidate concrete according to recommendations in ACI 309R.
   1. Consolidate concrete along face of forms and adjacent to transverse joints with an internal vibrator. Keep vibrator away from joint assemblies, reinforcement, or side forms. Use only square-faced shovels for hand-spreading and consolidation. Consolidate with care to prevent dislocating reinforcement, dowels, and joint devices.

H. Place concrete in two operations; strike off initial pour for entire width of placement and to the required depth below finish surface. Lay welded wire fabric or fabricated bar mats immediately in final position. Place top layer of concrete, strike off, and screed.
   1. Remove and replace portions of bottom layer of concrete that have been placed more than 15 minutes without being covered by top layer, or use bonding agent if approved by Architect.

I. Screed pavement surfaces with a straightedge and strike off. Commence initial floating using bull floats or darbies to form an open textured and uniform surface plane before excess moisture or bleed water appears on the surface. Do not further disturb concrete surfaces before beginning finishing operations or spreading dry-shake surface treatments.

J. Curbs and Gutters: When automatic machine placement is used for curb and gutter placement, submit revised mix design and laboratory test results that meet or exceed requirements. Produce curbs and gutters to required cross section, lines, grades, finish, and jointing as specified for formed concrete. If results are not approved, remove and replace with formed concrete.

K. Slip-Form Pavers: When automatic machine placement is used for pavement, submit revised mix design and laboratory test results that meet or exceed requirements. Produce

pavement to required thickness, lines, grades, finish, and jointing as required for formed pavement.

1. Compact sub-base and prepare subgrade of sufficient width to prevent displacement of paver machine during operations.

L. When adjoining pavement lanes are placed in separate pours, do not operate equipment on concrete until pavement has attained 85 percent of its 28-day compressive strength.

M. Cold-Weather Placement: Comply with ACI 306.1 and as follows. Protect concrete work from physical damage or reduced strength that could be caused by frost, freezing actions, or low temperatures.

1. When air temperature has fallen to or is expected to fall below 40 deg F (4.4 deg C), uniformly heat water and aggregates before mixing to obtain a concrete mixture temperature of not less than 50 deg F (10 deg C) and not more than 80 deg F (27 deg C) at point of placement.
2. Do not use frozen materials or materials containing ice or snow.
3. Do not use calcium chloride, salt, or other materials containing antifreeze agents or chemical accelerators, unless otherwise specified and approved in mix designs.

N. Hot-Weather Placement: Place concrete according to recommendations in ACI 305R and as follows when hot-weather conditions exist:

1. Cool ingredients before mixing to maintain concrete temperature at time of placement below 90 deg F (32 deg C). Chilled mixing water or chopped ice may be used to control temperature, provided water equivalent of ice is calculated to total amount of mixing water. Using liquid nitrogen to cool concrete is Contractor's option.
2. Cover reinforcement steel with water-soaked burlap so steel temperature will not exceed ambient air temperature immediately before embedding in concrete.
3. Fog-spray forms, reinforcement steel, and subgrade just before placing concrete. Keep subgrade moisture uniform without standing water, soft spots, or dry areas.

3.6 CONCRETE FINISHING

A. General: Wetting of concrete surfaces during screeding, initial floating, or finishing operations is prohibited.

B. Float Finish: Begin the second floating operation when bleed-water sheen has disappeared and the concrete surface has stiffened sufficiently to permit operations. Float surface with power-driven floats, or by hand floating if area is small or inaccessible to power units. Finish surfaces to true planes. Cut down high spots, and fill low spots. Re-float surface immediately to uniform granular texture.

1. Medium-to-Coarse-Textured Broom Finish: Provide a coarse finish by striating float-finished concrete surface 1/16 to 1/8 inch (1.6 to 3 mm) deep with a stiff-bristled broom, perpendicular to line of traffic.

3.7 SPECIAL FINISHES

A. Refer to Architectural Plans for Special Finishes.

3.8 CONCRETE PROTECTION AND CURING

A. General: Protect freshly placed concrete from premature drying and excessive cold or hot temperatures. Comply with ACI 306.1 for cold-weather protection and follow recommendations in ACI 305R for hot-weather protection during curing.

B. Evaporation Retarder: Apply evaporation retarder to concrete surfaces if hot, dry, or windy conditions cause moisture loss approaching 0.2 lb/sq. ft. x h (1 kg/sq. m x h) before and during finishing operations. Apply according to Manufacturer's written instructions after placing, screeding, and bull floating or darbying concrete, but before float finishing.

C. Begin curing after finishing concrete, but not before free water has disappeared from concrete surface.

D. Curing Methods: Cure concrete by moisture curing, moisture-retaining-cover curing, curing compound, or a combination of these as follows:
   1. Moisture Curing: Keep surfaces continuously moist for not less than seven days with the following materials:
      a. Water
      b. Continuous water-fog spray
      c. Absorptive cover, water saturated, and kept continuously wet. Cover concrete surfaces and edges with 12-inch (300-mm) lap over adjacent absorptive covers.
   2. Moisture-Retaining-Cover Curing: Cover concrete surfaces with moisture-retaining cover for curing concrete, placed in widest practicable width, with sides and ends lapped at least 12 inches (300 mm), and sealed by waterproof tape or adhesive. Immediately repair any holes or tears during curing period using cover material and waterproof tape.
   3. Curing Compound: Apply uniformly in continuous operation by power spray or roller according to Manufacturer's written instructions. Recoat areas subjected to heavy rainfall within three hours after initial application. Maintain continuity of coating and repair damage during curing period.

3.9 FIELD QUALITY CONTROL

A. Testing Agency: Contractor will engage a qualified independent testing and inspection agency to sample materials, perform tests, and submit test reports during concrete placement according to requirements specified in this Article.

B. Testing Services: Testing shall be performed according to the following requirements:
   1. Sampling Fresh Concrete: Representative samples of fresh concrete shall be obtained according to ASTM C 172, except modified for slump to comply with ASTM C 94.
   2. Slump: ASTM C 143; one test at point of placement for each compressive-strength test, but not less than one test for each day's pour of each type of concrete. Additional tests will be required when concrete consistency changes.
   3. Air Content: ASTM C 231, pressure method; one test for each compressive-strength test, but not less than one test for each day's pour of each type of air-entrained concrete.

4. Concrete Temperature: ASTM C 1064; one test hourly when air temperature is 40 deg F (4.4 deg C) and below and when 80 deg F (27 deg C) and above, and one test for each set of compressive-strength specimens.
5. Compression Test Specimens: ASTM C 31/C 31M; one set of four standard cylinders for each compressive-strength test, unless otherwise indicated. Cylinders shall be molded and stored for laboratory-cured test specimens unless field-cured test specimens are required.
6. Compressive-Strength Tests: ASTM C 39; one set for each day's pour of each concrete class exceeding 5 cu. yd. (4 cu. m), but less than 25 cu. yd. (19 cu. m), plus one set for each additional 50 cu. yd. (38 cu. m). One specimen shall be tested at 7 days and two specimens at 28 days; one specimen shall be retained in reserve for later testing if required.
7. When frequency of testing will provide fewer than five compressive-strength tests for a given class of concrete, testing shall be conducted from at least five randomly selected batches or from each batch if fewer than five are used.
8. When total quantity of a given class of concrete is less than 50 cu. yd. (38 cu. m), Architect may waive compressive-strength testing if adequate evidence of satisfactory strength is provided.
9. When strength of field-cured cylinders is less than 85 percent of companion laboratory-cured cylinders, current operations shall be evaluated and corrective procedures shall be provided for protecting and curing in-place concrete.
10. Strength level of concrete will be considered satisfactory if averages of sets of three consecutive compressive-strength test results equal or exceed specified compressive strength and no individual compressive-strength test result falls below specified compressive strength by more than 500 psi (3.4 MPa).

C. Test results shall be reported in writing to Architect, Concrete Manufacturer, and Contractor within 24 hours of testing. Reports of compressive-strength tests shall contain Project identification name and number, date of concrete placement, name of concrete testing agency, concrete type and class, location of concrete batch in pavement, design compressive strength at 28 days, concrete mix proportions and materials, compressive breaking strength, and type of break for both 7- and 28-day tests.

D. Nondestructive Testing: Impact hammer, sonoscope, or other nondestructive device may be permitted by Architect but will not be used as the sole basis for approval or rejection.

E. Additional Tests: Testing agency shall make additional tests of the concrete when test results indicate slump, air entrainment, concrete strengths, or other requirements have not been met, as directed by Architect. Testing agency may conduct tests to determine adequacy of concrete by cored cylinders complying with ASTM C 42, or by other methods as directed.

3.10 REPAIRS AND PROTECTION

A. Remove and replace concrete that is broken, damaged, or defective, or does not meet requirements in this Section.

B. Drill test cores where directed by Architect when necessary to determine magnitude of cracks or defective areas. Fill drilled core holes in satisfactory areas with Portland cement concrete bonded to with epoxy adhesive.

END OF SECTION

SECTION 02764
PAVEMENT JOINT SEALANTS

PART 1 - GENERAL

1.1 RELATED DOCUMENTS

A. Drawings and general provisions of the Contract, including General and Supplementary Conditions and Division 1 Specification Sections, apply to this Section.

1.2 SUMMARY

A. This Section includes the following:
   1. Expansion and contraction joints within Portland cement concrete pavement
   2. Joints between Portland cement concrete and asphalt pavement

B. Related Sections include the following:
   1. Division 2 Section "Hot-Mix Asphalt Paving" for constructing joints between concrete and asphalt pavement
   2. Division 2 Section “Cement Concrete “for constructing joints in concrete paving
   3. Division 7 Section "Joint Sealants" for sealing non-traffic and traffic joints in locations not specified in this Section

1.3 SUBMITTALS

A. Product Data: For each joint-sealant product indicated.

B. Product Certificates: For each type of joint sealant and accessory, signed by product Manufacturer.

C. Compatibility and Adhesion Test Reports: From sealant Manufacturer, indicating the following:
   1. Materials forming joint substrates and joint-sealant backings have been tested for compatibility and adhesion with joint sealants.
   2. Interpretation of test results and written recommendations for primers and substrate preparation needed for adhesion.

D. Product Test Reports: Based on evaluation of comprehensive tests performed by a qualified testing agency, for sealants.

1.4 QUALITY ASSURANCE

A. Installer Qualifications: An experienced Installer who has specialized in installing joint sealants similar in material, design, and extent to those indicated for this Project and whose work has resulted in joint-sealant installations with a record of successful in-service performance.

B. Source Limitations: Obtain each type of joint sealant through one source from a single Manufacturer.

1.5 DELIVERY, STORAGE, AND HANDLING

A. Deliver materials to Project site in original unopened containers or bundles with labels indicating Manufacturer, product name and designation, color, expiration date, pot life, curing time, and mixing instructions for multi-component materials.

B. Store and handle materials to comply with Manufacturer's written instructions to prevent their deterioration or damage due to moisture, high or low temperatures, contaminants, or other causes.

1.6 PROJECT CONDITIONS

A. Environmental Limitations: Do not proceed with installation of joint sealants under the following conditions:
   1. When ambient and substrate temperature conditions are outside limits permitted by joint sealant Manufacturer
   2. When ambient and substrate temperature conditions are outside limits permitted by joint sealant Manufacturer or are below 40 deg F (4.4 deg C)
   3. When joint substrates are wet

B. Joint-Width Conditions: Do not proceed with installation of joint sealants where joint widths are less than that allowed by joint sealant Manufacturer for application indicated.

C. Joint-Substrate Conditions: Do not proceed with installation of joint sealants until contaminants capable of interfering with their adhesion are removed from joint substrates.

PART 2 - PRODUCTS

2.1 MATERIALS, GENERAL

A. Compatibility: Provide joint sealants, backing materials, and other related materials that are compatible with one another and with joint substrates under conditions of service and application, as demonstrated by joint sealant Manufacturer based on testing and field experience.

B. Colors of Exposed Joint Sealants: Match Architect's samples.

C. Colors of Exposed Joint Sealants: As indicated by referencing Manufacturer's designations.

D. Colors of Exposed Joint Sealants: As selected by Architect from Manufacturer's full range for this characteristic.

2.2 COLD-APPLIED JOINT SEALANTS

A. Type NS Silicone Sealant for Concrete: Single-component, low-modulus, neutral-curing, non-sag silicone sealant complying with ASTM D 5893 for Type NS.

B. Type SL Silicone Sealant for Concrete and Asphalt: Single-component, low-modulus, neutral-curing, self-leveling silicone sealant complying with ASTM D 5893 for Type SL.

C. Multi-component Low-Modulus Sealant for Concrete and Asphalt: Proprietary formulation consisting of reactive petropolymer and activator components producing a pourable, self-leveling sealant.

D. Available Products: Subject to compliance with requirements, cold-applied joint sealants that may be incorporated into the Work include, but are not limited to, the following:
   1. Type NS Silicone Sealant for Concrete:
      a. Roadsaver Silicone-SL; Crafco Inc.
      b. 888; Dow Corning
   2. Type SL Silicone Sealant for Concrete and Asphalt:
      a. 890-SL; Dow Corning
   3. Multi-component Low-Modulus Sealant for Concrete and Asphalt:
      a. SOF-SEAL; W.R. Meadows, Inc.

2.3 HOT-APPLIED JOINT SEALANTS

A. Elastomeric Sealant for Concrete: Single-component formulation complying with ASTM D 3406.

B. Sealant for Concrete and Asphalt: Single-component formulation complying with ASTM D 3405.

C. Available Products: Subject to compliance with requirements, hot-applied joint sealants that may be incorporated into the Work include, but are not limited to, the following:
   1. Elastomeric Sealant for Concrete:
      a. Superseal 444/777; Crafco, Inc.
      b. POLY-JET 3406; W.R. Meadows, Inc.
   2. Sealant for Concrete and Asphalt:
      a. ROADSAVER 221; Crafco Inc.
      b. Product #9005; Koch Materials Company
      c. Product #9030; Koch Materials Company
      d. SEALTIGHT HI-SPEC; W.R. Meadows, Inc.

2.4 JOINT-SEALANT BACKER MATERIALS

A. General: Provide joint-sealant backer materials that are non-staining; are compatible with joint substrates, sealants, primers, and other joint fillers; and are approved for applications indicated by joint sealant Manufacturer based on field experience and laboratory testing.

B. Round Backer Rod for Cold- and Hot-Applied Sealants: ASTM D 5249, Type 1, of diameter and density required to control sealant depths and prevent bottom-side adhesion of sealant.

C. Backer Strips for Cold- and Hot-Applied Sealants: ASTM D 5249; Type 2; of thickness and width required to control sealant depths, prevent bottom-side adhesion of sealant, and fill remainder of joint opening under sealant.

2.5 PRIMERS

A. Primers: Product recommended by joint sealant Manufacturer where required for adhesion of sealant to joint substrates indicated, as determined from preconstruction joint-sealant-substrate tests and field tests.

PART 3 - EXECUTION

3.1 EXAMINATION

A. Examine joints indicated to receive joint sealants, with Installer present, for compliance with requirements for joint configuration, installation tolerances, and other conditions affecting joint-sealant performance.

B. Proceed with installation only after unsatisfactory conditions have been corrected.

3.2 PREPARATION

A. Surface Cleaning of Joints: Clean out joints immediately before installing joint sealants to comply with joint sealant Manufacturer's written instructions.

B. Joint Priming: Prime joint substrates where indicated or where recommended in writing by joint sealant Manufacturer, based on preconstruction joint-sealant-substrate tests or prior experience. Apply primer to comply with joint sealant Manufacturer's written instructions. Confine primers to areas of joint-sealant bond; do not allow spillage or migration onto adjoining surfaces.

3.3 INSTALLATION OF JOINT SEALANTS

A. General: Comply with joint sealant Manufacturer's written installation instructions applicable to products and applications indicated, unless more stringent requirements apply.

B. Sealant Installation Standard: Comply with recommendations of ASTM C 1193 for use of joint sealants as applicable to materials, applications, and conditions indicated.

C. Install backer materials of type indicated to support sealants during application and at position required to produce cross-sectional shapes and depths of installed sealants relative to joint widths that allow optimum sealant movement capability.
   1. Do not leave gaps between ends of backer materials.
   2. Do not stretch, twist, puncture, or tear backer materials.
   3. Remove absorbent backer materials that have become wet before sealant application and replace them with dry materials.

D. Install sealants by proven techniques to comply with the following and at the same time backings are installed:
   1. Place sealants so they directly contact and fully wet joint substrates.
   2. Completely fill recesses provided for each joint configuration.
   3. Produce uniform, cross-sectional shapes and depths relative to joint widths that allow optimum sealant movement capability.

E. Tooling of Non-sag Sealants: Immediately after sealant application and before skinning or curing begins, tool sealants according to requirements specified below to form smooth, uniform beads of configuration indicated; to eliminate air pockets; and to ensure contact and adhesion of sealant with sides of joint.
   1. Remove excess sealants from surfaces adjacent to joint.
   2. Use tooling agents that are approved in writing by joint sealant Manufacturer and that do not discolor sealants or adjacent surfaces.

F. Provide joint configuration to comply with joint sealant Manufacturer's written instructions, unless otherwise indicated.

G. Provide recessed joint configuration for silicone sealants of recess depth and at locations indicated.

3.4 CLEANING

A. Clean off excess sealants or sealant smears adjacent to joints as the Work progresses by methods and with cleaning materials approved by Manufacturers of joint sealants and of products in which joints occur.

3.5 PROTECTION

A. Protect joint sealants during and after curing period from contact with contaminating substances and from damage resulting from construction operations or other causes so sealants are without deterioration or damage at time of Substantial Completion. If, despite such protection, damage or deterioration occurs, cut out and remove damaged or deteriorated joint sealants immediately so installations with repaired areas are indistinguishable from the original work.

END OF SECTION

SECTION 02780
DETECTABLE WARNING PAVERS

PART 1 - GENERAL

1.1 SUMMARY

A. Section Includes:
   1. Concrete pavers units
   2. Detectable warning pavers
   3. Sand bed and sand joint

B. Related Sections:
   1. Section 02923 - Landscape Grading: Preparation of subsoil for pavers.

1.2 REFERENCES

A. ASTM International:
   1. ASTM C33 - Standard Specification for Concrete Aggregates
   2. ASTM C144 - Standard Specification for Aggregate for Masonry Mortar
   3. ASTM C936 - Standard Specification for Solid Concrete Interlocking Paving Units

1.3 SYSTEM DESCRIPTION

A. Paving and Setting Bed: To accommodate pedestrian traffic.

1.4 SUBMITTALS

A. Section 01330 - Submittal Procedures: Requirements for submittals.

B. Shop Drawings: Indicate on shop drawings, layout of pavers, dimensions of paved areas, control joints, expansion joints, elevations, and affected adjacent construction.

C. Product Data: Submit characteristics of pavers unit, detectable warning pavers, dimensions, and special shapes.

D. Samples: Submit two samples of each Concrete pavers' size, illustrating style, size, color range and surface texture of units being provided.

E. Manufacturer's Installation Instructions: Submit substrate requirements and installation methods.

1.5 QUALIFICATIONS

A. Manufacturer: Company specializing in manufacturing Products specified in this section with minimum three years documented experience.

B. Installer: Company specializing in performing work of this section with minimum two years documented experience or approved by Manufacturer.

1.6 MOCKUP

A. Section 01400 - Quality Requirements: Requirements for mockup.

B. Construct mockup, 24 sq ft, including setting bed, pavers, joint sealers, control joint, expansion joint, and accessories to pattern indicated.

C. Locate where directed by Architect/Engineer.

D. Incorporate accepted mockup as part of Work.

1.7 EXTRA MATERIALS

A. Section 01700 - Execution Requirements: Spare parts and maintenance products.

B. Supply 10 of each pavers' size.

PART 2 - PRODUCTS

2.1 MANUFACTURERS

A. Manufacturers:
1. Belden Brick Model ADA Pavers
2. Pavestone Model Detectable Warning Pavers
3. ADA Solutions Inc. Model Cast-in-Place Composite Pavers Tiles
4. Substitutions: Section 01600 - Product Requirements

2.2 MATERIALS

A. Detectable Warning Pavers: Cast concrete with truncated domes Conforming to the following:
1. Type: ASTM C936, Hydraulically pressed concrete of 8,000 psi minimum, 28 day compressive strength
2. Air Entrained: 5 to 7 percent
3. Moisture Content: 7 percent
4. Moisture Absorption: 5 percent
5. Nominal Size: 3 7/8" x 7 13/16" x 2 3/8" inch
6. Style:
7. Color: Selected from Manufacturer's standard range
8. Shape: Rectangular

B. Sand for Setting Bed and Joint Filler: ASTM C144, clean washed river or bank sand.

C. Cast-In-Place Composite Pavers Tiles: In accordance with ADA Regulations for Detectable Warning on Curb Ramps. Raised truncated domes, Color and pattern as selected by Architect. The materials shall conform to the following specifications: Manufacturer ADA Solutions, Inc. Cast-In-Place Composite Pavers Tiles
   1. A homogenous glass and carbon reinforced composite which is colorfast and UV stable. The color of the tile is colored throughout and does not contain any type of paint coating to achieve the color.
   2. Strength: 20,000psi
   3. Slip resistance: exceeds 0.80 wet or dry

PART 3 - EXECUTION

3.1 EXAMINATION

A. Section 01300 - Administrative Requirements: Verification of existing conditions before starting work.

B. Verify that substrate is level or to correct gradient, smooth, capable of supporting pavers and imposed loads, and ready to receive Work of this section.

C. Verify gradients and elevations of substrate are correct.

3.2 PREPARATION

A. Treat soil with herbicide to retard plant growth.

3.3 INSTALLATION

A. Cast-In-Place Composite Pavers Tiles:
   1. Tile pavers units are to be used on new curb ramp locations. The panels can be pre-filled with concrete and set in place or pressed into place in the freshly poured concrete.

B. Detectable Warning Pavers:
   1. Excavate unsuitable, unstable or unconsolidated subgrade material and compact the area which is to receive the pave stones. Backfill, place and level the excavated area with a 4 inch minimum of a compacted structural base material.
   2. Spread sand evenly over prepared substrate surface to a maximum thickness of 1 ½ inches.
   3. Dampen and roller compact sand to level and even surface.
   4. Screed and scarify top 1/2 inch of sand.
   5. Place pavers units in parquet pattern, from straight reference edge. Place half units at edge and interruptions. Maintain tight and evenly spaced joints.
      a. Joint Width: 1/8 inches
   6. Sprinkle sand over surface and sweep into joints. Moisten joints and recover with additional sand until firm joints are achieved..
   7. Tamp pave stones with a plate compactor, uniformly level, true to grade and free of movement.

8. Spread sand to 1/8” thickness over entire paving area.
9. Make one more pass with plate compactor to fill joints with sand. Remove excess sand.

END OF SECTION

SECTION 02821
CHAIN LINK FENCES AND GATES

PART 1 - GENERAL

1.1 SUMMARY

A. Section Includes:
1. Fence framework, fabric, and accessories
2. Excavation for post bases
3. Concrete foundation for posts
4. Manual gates and related hardware
5. Privacy slats

B. Related Sections:
1. Division 2 – Site Work
2. Division 3 – Concrete

1.2 REFERENCES

A. ASTM International:
1. ASTM A121 - Standard Specification for Zinc-Coated (Galvanized) Steel Barbed Wire
2. ASTM A123/A123M - Standard Specification for Zinc (Hot-Dip Galvanized) Coatings on Iron and Steel Products
3. ASTM A153/A153M - Standard Specification for Zinc Coating (Hot-Dip) on Iron and Steel Hardware
4. ASTM A392 - Standard Specification for Zinc-Coated Steel Chain-Link Fence Fabric
5. ASTM C94 - Standard Specification for Ready-Mixed Concrete
6. ASTM F567 - Standard Practice for Installation of Chain-Link Fence
7. ASTM F900 - Standard Specification for Industrial and Commercial Swing Gates
8. ASTM F1083 - Standard Specification for Pipe, Steel, Hot-Dipped Zinc-Coated (Galvanized) Welded, for Fence Structures
9. ASTM F1184 - Standard Specification for Industrial and Commercial Horizontal Slide Gates

B. Chain Link Fence Manufacturers Institute:
1. CLFMI - Product Manual

1.3 PERFORMANCE REQUIREMENTS

A. Structural Performance: Provide chain-link fences and gates capable of withstanding the effects of gravity loads and the following loads and stresses within limits and under conditions indicated:
1. Minimum Post Size and Maximum Spacing for Wind Velocity Pressure: Determine based on mesh size and pattern specified, and on the following minimum design wind pressures and according to CLFMI WLG 2445:

a. Consult a structural engineer experienced in design wind loads applicable to Project. Verify compliance with codes. See Evaluations.
b. Wind Speed: 120 mph
c. Fence Height: Six Feet
d. Line Post Spacing: At intervals not exceeding 10 feet
e. Line Post Group: IA, ASTM F 1043, Schedule 40 steel pipe
f. Wind Exposure Category: C

B. Lightning Protection System: Maximum grounding-resistance value of 25 ohms under normal dry conditions.

1.4 SYSTEM DESCRIPTION

A. Fence Height: Six (6) feet nominal.

1.5 SUBMITTALS

A. Section 01330 - Submittal Procedures: Requirements for submittals.

B. Shop Drawings: Show locations of fences, gates, posts, rails, tension wires, details of extended posts, extension arms, gate swing, or other operation, hardware, and accessories. Indicate materials, dimensions, sizes, weights, and finishes of components. Include plans, gate elevations, sections, details of post anchorage, attachment, bracing, and other required installation and operational clearances.
1. For installed products indicated to comply with design loads, include structural analysis data.

C. Samples for Verification: For each type of chain-link fence and gate indicated.

D. Qualification Data: For Installer.

E. Product Data: Submit data on gates, fabric, posts, accessories, fittings and hardware.

F. Samples: Submit two samples of gates, fence fabric, illustrating construction and finish.

G. Manufacturer's Installation Instructions: Submit installation requirements, post foundation anchor bolt templates, and maintenance manual.

1.6 CLOSEOUT SUBMITTALS

A. Section 01700 - Execution Requirements: Closeout procedures.

B. Project Record Documents: Accurately record actual locations of property perimeter posts relative to property lines and easements.

C. Operation and Maintenance Data: Procedures for submittals.

1.7 QUALITY ASSURANCE

A. Supply material in accordance with CLFMI - Product Manual.

B. Perform installation in accordance with ASTM F567.

C. Maintain one copy copies of each document on site.

D. Field Measurements: Verify layout information for chain-link fences and gates shown on Drawings in relation to property survey and existing structures. Verify dimensions by field measurements.

1.8 QUALIFICATIONS

A. Manufacturer: Company specializing in manufacturing Products specified in this section with minimum three years documented experience.

B. Installer: Installer Qualifications: An experienced Installer who has completed chain-link fences and gates similar in material, design, and extent to those indicated for this Project and whose work has resulted in construction with a record of successful in-service performance. Company specializing in performing work of this section with minimum three years documented experience and approved by Manufacturer.

1.9 DELIVERY, STORAGE AND HANDLING

A. Section 01600 - Product Requirements: Requirements for transporting, handling, storing, and protecting products.

B. Deliver fence fabric and accessories in packed cartons or firmly tied rolls.

C. Identify each package with Manufacturer’s name.

D. Store fence fabric and accessories in secure and dry place.

PART 2 - PRODUCTS

2.1 MANUFACTURERS

A. Manufacturers:
1. Master Halco
2. Merchants Metal
3. Substitutions: Section 01600 - Product Requirements

2.2 MATERIALS

A. Framing (Steel): ASTM F1083 Schedule 40 galvanized steel pipe, welded construction, minimum yield strength of 25 ksi; coating conforming to ASTM F1043 Type A on pipe exterior and interior.

B. Fabric Wire (Steel): ASTM A392 zinc coated wire fabric. Weight of Metallic (Zinc) Coating: ASTM A 392, Type II, Class 1, 1.2 oz./sq. ft. with zinc coating applied after weaving.

C. Barbed Wire: ASTM A121 galvanized steel; 12 gage thick wire, 3 strands, 4 points at 3" inch oc.

D. Concrete: ASTM C94; Normal Portland Cement, 3,000 psi strength at 28 days, 3 inch slump; nominal sized coarse aggregate.

2.3 COMPONENTS

A. Line Posts: 2.38 inch diameter.

B. Corner and Terminal Posts: 3.5 inch.

C. Gate Posts: 4.5 inch diameter.

D. Top and Brace Rail: 1.66 inch diameter, plain end, sleeve coupled.

E. Gate Frame: 1.66 inch diameter for welded and fittings and truss rod fabrication.

F. Fabric: 2 inch diamond mesh interwoven wire, 9 gage thick, barbed and barded, top salvage twisted tight, bottom selvage twisted tight.

G. Tension Wire: 6 gage thick steel, single strand.

H. Tension Band: thick steel.

I. Tension Strap: thick steel.

J. Tie Wire: According to ASTM F 626. Aluminum alloy steel wire.

2.4 ACCESSORIES

A. Caps: Cast steel galvanized; sized to post diameter, set screw retainer.
   1. Line post caps with loop to receive tension wire or top rail.

B. Fittings: Sleeves, bands, clips, rail ends, tension bars, fasteners and fittings; galvanized steel.
   1. Tension Bars: Steel, length not less than 2 inches shorter than full height of chain-link fabric. Provide one bar for each gate and end post, and two for each corner and pull post, unless fabric is integrally woven into post.
   2. Truss Rod Assemblies: Steel, hot-dip galvanized after threading rod and turnbuckle or other means of adjustment.
   3. Standard Round Wire Ties: For attaching chain-link fabric to posts, rails, and frames, complying with the following:
      a. Hot-Dip Galvanized Steel: 0.148-inch- diameter wire; galvanized coating thickness matching coating thickness of chain-link fence fabric.

C. Extension Arms: Galvanized pressed steel, to accommodate 3 strands of barbed wire, single arm, sloped to 45 degrees. Barbed Wire Arms: Pressed steel or cast iron, with clips, slots, or other means for attaching strands of barbed wire, integral with post cap; for each post, unless otherwise indicated, and as follows:
1. Line posts with arms that accommodate top rail or tension wire.
2. Extended posts are indicated at fence corner posts, unless Corner arms are indicated and approved.
3. Type I, single slanted arm.

D. Gate Hardware: Center gate stop and drop rod, Mechanical keepers; three 180 degree gate hinges for each leaf and hardware for padlock keyed to match hardware specified in Section 08710. Hardware: Latches permitting operation from both sides of gate, hinges, center gate stops and keepers for each gate leaf more than 5 feet wide. Fabricate latches with integral eye openings for padlocking; padlock accessible from both sides of gate.

E. Barbed Wire: Zinc-Coated Steel Barbed Wire: Comply with ASTM A 121, Chain-Link Fence grade for the following three-strand barbed wire:
1. Standard Size and Construction: 0.099-inch- diameter line wire with 0.080-inch-diameter, 2-point round barbs spaced not more than 4 inches o.c.

F. Fence Grounding:
1. Conductors: Bare, solid wire for No. 6 AWG and smaller; stranded wire for No. 4 AWG and larger.
   a. Material above Finished Grade: Copper
   b. Material on or below Finished Grade: Copper
   c. Bonding Jumpers: Braided copper tape, 1 inch wide, woven of No. 30 AWG bare copper wire, terminated with copper ferrules
2. Connectors and Grounding Rods: Comply with UL 467.
   a. Connectors for Below-Grade Use: Exothermic welded type
   b. Grounding Rods: Copper-clad steel
      1) Size: 5/8 by 96 inches

2.5 GATES

A. General:
1. Gate Types, Opening Widths and Directions of Operation: As indicated on Drawings
2. Factory assemble gates
3. Design gates for operation by one person

B. Swing Gates:
1. Fabricate gates to permit 180 degree swing.
2. Gates Construction: ASTM F900 with welded corners. Use of corner fittings is not permitted.

C. Sliding Gates:
1. Framing and Posts: ASTM F1184, Classification: Type II Cantilever Slide, Class 1 with external roller assemblies.

2. Rollers for overhead and cantilever sliding gates: Bearing type. Furnish non-sealed bearings with grease fitting for periodic maintenance.
3. Secure rollers to post or frame without welding.

D. Cantilever Sliding Gates:

1. Fabricate gate leaf frames and tracks as required to meet performance requirements of ASTM F1184 and specified performance requirements.
2. Frame Members: galvanized steel tubing with outside dimensions and weight according to ASTM F 1184, welded assembly forming rigid, one piece unit.
3. Install fabric securely stretched and held in center of tubing.
4. Brace cantilever overhang frames with 3/8 inch brace rods. For gate leaf sizes greater than 23 feet, fabricate with additional lateral support rail welded adjacent to top and bottom horizontal rails.
5. Provide minimum overhang for each leaf opening size as per Manufacturers requirements:

Opening	Overhang
Up to 10’-0” (3.0 m)	6’-6” (2.0 m)
10’-0” -14’-0” (3.0 m - 4.3 m)	7’-6” (2.3 m)
14’-1” -22’-0” (4.4 m - 6.7 m)	10’-0” (3.0 m)
22’-1” - 30’-0” (6.8 - 9.1 m)	12’-0” (3.7 m)

6. Track and Rail: Combined, integral track and rail, galvanized steel with outside dimensions and weight according to ASTM F 1184.
7. Roller Track Assembly: As required per ASTM F 1184 for Type II, Class 1 gates. Two swivel type, zinc, die cast trucks having four, sealed lubricant ball bearing wheels minimum 2 inches diameter by 9/16 inches width designed for same reaction load as rail. Provide two side-rolling wheels for each gate leaf to maintain alignment of truck in track.
8. Fasten trucks to post brackets by minimum 7/8 inch (22 mm) diameter, 1/2 inch (13 mm) shank ball bolts.
9. Provide galvanized steel guide wheel assemblies consisting of two rubber wheels of minimum 4 inch (100 mm) diameter with oil-impregnated bearings for each supporting post.
10. Attach guide wheel assembly to post so bottom horizontal member rolls between wheels and permitting adjustment to maintain plumb gate frames and proper alignment.

2.6 FINISHES

A. Components and Fabric: Galvanized to ASTM A123/A123M; ASTM A153/A153M for components; ASTM A392 for fabric; 2.0 oz/sq ft coating.

B. Hardware: Galvanized to ASTM A153/A153M, 2.0 oz/sq ft coating.

C. Accessories: Same finish as framing.

PART 3 - EXECUTION

3.1 GENERAL INSTALLATION

A. Demolition: On the state's property and at the new fence, the Contractor shall clear an unobstructive area of 4' of the State's property line. The Contractor shall coordinate fence installation with the State and Owners representative.

B. Clearing and Grading: The Contractor shall do all clearing of brush, rocks and debris which may be necessary for the installation of fencing.

C. Stake Corners: The State will stake out the locations for corner posts and terminal posts in this installation. The fencing panels between corner and terminal posts shall generally follow the finished ground elevations. The Contractor shall grade off irregularities necessary to limit the variation of grade under the bottom of the fence to a distance no greater than 6" or less than 2".

D. The finished fence shall be plumb, taut, true to line and complete in every detail. All work shall be done by experienced workmen.

E. Excavated material from footings shall be spread neatly and uniformly to leave the area adjacent to the fence as slightly as possible.

3.2 INSTALLATION

A. Install framework, fabric, accessories and gates in accordance with ASTM F567.

B. Set intermediate, terminal, and gate posts plumb, in concrete footings with top of footing 1 ½" inches above finish grade. Slope top of concrete for water runoff.

C. Line Post Footing Depth Below Finish Grade: ASTM F567. Drill holes in firm, undisturbed or compacted soil. Holes shall have diameter 4 times greater than outside dimension of post, and depths approximately 6" deeper than post bottom. Excavate deeper as required for adequate support in soft and loose soils, and for posts with heavy lateral loads. Set post bottom 24" below surface when in firm, undisturbed soil. Place concrete around posts in a continuous pour. Trowel finish around post and slope to direct water away from posts.

D. Corner and Terminal Post Footing Depth Below Finish Grade: ASTM F567. Drill holes in firm, undisturbed or compacted soil. Holes shall have diameter 4 times greater than outside dimension of post, and depths approximately 6" deeper than post bottom. Excavate deeper as required for adequate support in soft and loose soils, and for posts with heavy lateral loads. Set post bottom 42" below surface when in firm, undisturbed soil. Place concrete around posts in a continuous pour. Trowel finish around post and slope to direct water away from posts.

E. Pull Post Spacing: Pull post shall be located not more than 500 feet apart and at each change in direction exceeding 20 degrees. Runs of fence over 500 feet but less than 1000 feet shall have a pull post centered in the run.

F. Gate Post Footing Depth Below Finish Grade: ASTM F567. Drill holes in firm, undisturbed or compacted soil. Holes shall have diameter 8 times greater than outside dimension of post, and depths approximately 6" deeper than post bottom. Excavate deeper as required for adequate support in soft and loose soils, and for posts with heavy lateral loads. Set post bottom 48" below surface when in firm, undisturbed soil. Place concrete around posts in a continuous pour. Trowel finish around post and slope to direct water away from posts.

G. Brace each gate and corner post to adjacent line post with horizontal center brace rail and diagonal truss rods. Maintaining plumb position and alignment of fencing. Install braces at end and gate posts and at both sides of corner and pull posts.

1. Locate horizontal braces at midheight of fabric 6 feet or higher, on fences with top rail and at 2/3 fabric height on fences without top rail. Install so posts are plumb when diagonal rod is under proper tension.

H. Top Rail: Maintaining plumb position and alignment of fencing. Run rail continuously through line post caps, bending to radius for curved runs and terminating into rail end attached to posts or post caps fabricated to receive rail at terminal posts. Provide expansion couplings as recommended in writing by fencing Manufacturer. Install top rail through line post tops and splice with 6 inch long rail sleeves.

I. Install center and bottom brace rail on corner gate leaves.

J. Place fabric on outside of posts and rails.

K. Do not stretch fabric until concrete foundation has cured 28 days.

L. Stretch fabric between terminal posts or at intervals of 100 feet maximum, whichever is less.

M. Position bottom of fabric 1 ½" inches above finished grade.

N. Fasten fabric to top rail, line posts, braces, and bottom tension wire with tie wire at maximum 15 inches on centers.

O. Attach fabric to end, corner, and gate posts with tension bars and tension bar clips.

P. Tension Wire: Maintaining plumb position and alignment of fencing. Pull wire taut, without sags. Fasten fabric to tension wire with 0.120-inch- diameter hog rings of same material and finish as fabric wire, spaced a maximum of 24 inches o.c. Install tension wire in locations indicated before stretching fabric.

1. Bottom Tension Wire: Install tension wire within 6 inches of bottom of fabric and tie to each post with not less than same diameter and type of wire.

Q. Install support arms sloped outward and attach barbed wire; tension and secure.

R. Support gates from gate posts. Do not attach hinged side of gate from building wall.

S. Install gate with fabric and barbed wire overhang to match fence. Install three hinges on each gate leaf, latch, catches, foot bolts and sockets, torsion spring retainer, retainer and locking clamp.

T. Provide concrete center drop to footing depth and drop rod retainers at center of double gate openings.

U. Connect to existing fence at new terminal post.

V. Install posts with 4 inches maximum clear opening from end posts to buildings, fences and other structures.

W. Center and align posts. Place concrete around posts, and vibrate for consolidation. Verify vertical and top alignment of posts and make necessary corrections.

X. Extend concrete footings 1 inches above grade, and trowel, forming crown to shed water.

Y. Allow footings to cure minimum 7 days before installing fabric and other materials attached to posts.

Z. Fasteners: Install nuts for tension bands and carriage bolts on the side of the fence opposite the fabric side. Peen ends of bolts or score threads to prevent removal of nuts.

AA. Barbed Wire: Install barbed wire uniformly spaced, angled toward security side of fence. Pull wire taut and install securely to extension arms and secure to end post or terminal arms.

3.3 GATE INSTALLATION

A. Install gates according to Manufacturer's written instructions, level, plumb, and secure for full opening without interference. Attach fabric as for fencing. Attach hardware using tamper-resistant or concealed means. Install ground-set items in concrete for anchorage. Adjust hardware for smooth operation and lubricate where necessary.

3.4 GROUNDING AND BONDING

A. Fence Grounding: Install at maximum intervals of 1500 feet except as follows:
   1. Fences within 100 Feet of Buildings, Structures, Walkways, and Roadways: Ground at maximum intervals of 750 feet.
      a. Gates and Other Fence Openings: Ground fence on each side of opening.
         1) Bond metal gates to gate posts.
         2) Bond across openings, with and without gates, except openings indicated as intentional fence discontinuities. Use No. 2 AWG wire and bury it at least 18 inches below finished grade.

B. Protection at Crossings of Overhead Electrical Power Lines: Ground fence at location of crossing and at a maximum distance of 150 feet on each side of crossing.

C. Fences Enclosing Electrical Power Distribution Equipment: Ground as required by IEEE C2, unless otherwise indicated.

D. Grounding Method: At each grounding location, drive a grounding rod vertically until the top is 6 inches below finished grade. Connect rod to fence with No. 6 AWG conductor. Connect conductor to each fence component at the grounding location, including the following:
1. Each Barbed Wire Strand. Make grounding connections to barbed wire with wire-to-wire connectors designed for this purpose.

E. Bonding Method for Gates: Connect bonding jumper between gate post and gate frame.

F. Connections: Make connections so possibility of galvanic action or electrolysis is minimized. Select connectors, connection hardware, conductors, and connection methods so metals in direct contact will be galvanically compatible.
1. Use electroplated or hot-tin-coated materials to ensure high conductivity and to make contact points closer in order of galvanic series.
2. Make connections with clean, bare metal at points of contact.
3. Coat and seal connections having dissimilar metals with inert material to prevent future penetration of moisture to contact surfaces.

G. Bonding to Lightning Protection System: If fence terminates at lightning-protected building or structure, ground the fence and bond the fence grounding conductor to lightning protection down conductor or lightning protection grounding conductor complying with NFPA 780.

3.5 ADJUSTING

A. Gate: Adjust gate to operate smoothly, easily, and quietly, free of binding, warp, excessive deflection, distortion, nonalignment, misplacement, disruption, or malfunction, throughout entire operational range. Confirm that latches and locks engage accurately and securely without forcing or binding.

B. Lubricate hardware and other moving parts.

3.6 ERECTION TOLERANCES

A. Section 01400 - Quality Requirements: Tolerances.

B. Maximum Variation From Plumb: ¼ inch.

C. Maximum Offset From Indicated Position: 1 inch.

D. Minimum distance from property line: 12 inches.

END OF SECTION

SECTION 02900
GRADING

PART 1 - GENERAL

1.1 RELATED DOCUMENTS

A. The Terms and Conditions of the Contract, including Supplementary and Special Conditions of the Contract, and the Drawings apply to this Section.

1.2 SUMMARY

A. Section Includes:

1. Provide all material, labor, equipment and services required for grading as shown on the drawings and described herein.

2. Protection of utilities and property.

PART 2 - PRODUCTS

2.1 MATERIALS

A. General fill shall be material removed during excavation, free from debris, rocks larger than 2", roots and other deleterious materials (for use under open landscaped areas only).

B. Sand shall be river sand, clean and washed, conforming to ASTM C33, free from excess salt, alkali, vegetable matter and clay.

C. Select Fill (for areas other than building) shall be obtained from an approved source and shall meet the specifications and requirements of the geotechnical report.

D. Select Fill (for building areas) shall meet the requirements per the Structural Drawings and Section 03300 (if applicable).

E. Topsoil shall meet the requirements of the Landscape Plans.

PART 3 - EXECUTION

3.1 GRADING

A. The site shall be prepared and shaped in conformity with the lines and grades as shown on the plans.

END OF SECTION

SECTION 02925
SUBGRADE PREPARATION

PART 1 - GENERAL

1.1 RELATED DOCUMENTS

A. The Terms and Conditions of the Contract, including Supplementary and Special Conditions of the Contract, and the Drawings apply to this Section.

1.2 SUMMARY

A. Section includes furnishing all labor, materials, and equipment necessary for completing all subgrade preparation operations for pavement, drainage facilities and other improvements shown on the drawings associated with this project.

1.3 RELATED WORK

A. Related work of other Sections includes:

1. Section 02200 – Earthwork
2. Section 02324 – Trenching
3. TxDOT Specification: Item 132 – Embankment

1.4 REFERENCES

A. ASTM: American Society for Testing and Materials, 1916 Race Street, Philadelphia, Pennsylvania 19103, U.S.A.

1. ASTM D698-00ae1 - Standard Test Methods for Laboratory Compaction Characteristics of Soil Using Standard Effort (12,400 ft-lbf/ft^3 (600 kN-m/m^3)).

2. ASTM D1557-02e1 - Standard Test Methods for Laboratory Compaction Characteristics of Soil Using Modified Effort (56,000 ft-lbf/ft^3 (2,700 kN-m/m^3)).

3. ASTM D2922-05 - Standard Test Methods for Density of Soil and Soil-Aggregate in Place by Nuclear Methods (Shallow Depth).

4. ASTM D4318-05 - Standard Test Methods for Liquid Limit, Plastic Limit and Plasticity Index of Soils.

B. TxDOT: Texas Department of Transportation.

1. TxDOT Item 100 - Standard Specifications for Construction of Highways, Streets and Bridges, 2004 Edition.

2. TxDOT Item 260 - Standard Specifications for Construction of Highways, Streets and Bridges, 2004 Edition.

1.5 DEFINITIONS

A. Prepare Ground Surface: Ground surface after completion of site clearing, scalping of sod, stripping of topsoil, excavation to grade, and scarification and compaction of subgrade.

B. Subgrade: Layer of existing soil after completion of clearing, grubbing, scalping to topsoil prior to placement of fill, structural fill, roadway structure or base for floor slab.

C. Proof Rolling: Testing of subgrade by compactive effort to identify areas that will not support the future loading without excessive settlement.

1.6 SUBMITTALS

A. Provide certifications and laboratory analysis results for all fill materials proposed for use on the project, indicating conformity to the specifications and source of materials.

B. Perform, document and report the following quality control tests at the designated frequency in accordance with Section 01330.

1. Submit two (2) copies of test reports of the moisture-density and compaction results for review.

2. Comply with Submittal requirements outlined in Sections 01330.

PART 2 - PRODUCTS (NOT USED)

PART 3 - EXECUTION

3.1 SUBGRADE PREPARATION UNDER BUILT-UP AREAS

A. The Subgrade shall be prepared and shaped in conformity with the lines and grades as shown on the plans and contained in the Geotechnical Report.

B. Fill as required to obtain proper subgrade elevation in lifts not to exceed 6" in thickness.

1. Built-Up Areas: In built-up areas, including: building slab areas, sidewalks, ramps, retaining wall, pavement areas, channel areas, or other such structural concrete items, fill with compacted select fill in carefully placed and

compacted lifts not to exceed 6" before compaction. Compact all select fill material in lifts not to exceed 6" to a minimum of 95% as specified below.

C. In cut areas, all unstable or otherwise objectionable material including roots, shall be removed from the subgrade and replaced with specified material.

D. Except under the building, in cut areas: scarify, re-work, and compact the top 6" of the exposed subgrade to at least 95% of the maximum density in accordance with Test Method TEX-113-E prior to placement of select fill.

E. Testing is required to meet the Geotechnical Report requirements.

F. Failures in tested areas shall be re-tested until passed and the cost of all re-testing shall be borne by the Contractor.

3.2 SUBGRADE PREPARATION IN PAVED AREAS

A. Subgrade Preparation:
1. Comply with the requirements of TxDOT Items 264 and 247 for subgrade preparation under flexible base. Provide "Density Control" method of compaction (for all subgrade work).
2. Scarify, rework, and compact 8” of the exposed subgrade (to a depth as shown on the drawings) to at least 95% of the standard moisture density to ASTM D698-00ae1 prior to placement of flexible base material.

3.3 QUALITY CONTROL TESTING

A. Provide certifications and laboratory analysis results for all fill materials proposed for use on the project, indicating conformity to the specifications and source of materials.

B. Engage a testing laboratory for control testing during subgrade preparation operations to perform, document and report the following quality control tests at the designated frequency.

1. Perform field density tests in accordance with ASTM D698-00ae1.

2. Field density tests may also be performed by the nuclear method in accordance with ASTM D2922-05, provided that calibration curves are periodically checked and adjusted to correlate to tests performed using ASTM D698. When field in-place density tests are performed using nuclear methods, make calibration checks of both density and moisture gages at beginning of work.

3. Perform at least one field in-place density test for each 5,000 square feet.

END OF SECTION

SECTION 02950
PARKING BUMPERS

PART 1 - GENERAL

1.1 RELATED DOCUMENTS

A. The Terms and Conditions of the Contract, including Supplementary and Special Conditions of the Contract, and the Drawings apply to this Section.

1.2 SUMMARY

A. Furnish all labor, materials and equipment for providing all of the following complete and in place:

1. Parking bumpers
2. Adhesive
3. Steel bars for installation

1.3 RELATED WORK

A. Related work of other Sections includes:

1. Section 03300- Cast-In-Place Concrete

1.4 REFERENCES

A. TxDOT: Texas Department of Transportation.

1. TxDOT DMS-6100 – Epoxies and Adhesives.

1.5 SUBMITTALS

A. General: Refer to Section 01330 - Submittal Procedures and Section 01600 – Product Requirements, for submittal requirements and procedures.

B. Shop Drawings: Submit Shop Drawings of bumpers, including plan layout and installation details, for approval.

C. Product Data: Submit manufacturers' product data of precast bumpers and epoxy adhesives for approval.

1.6 QUALITY ASSURANCE

A. Precast parking bumpers shall be manufactured for the intended purpose by a company or firm specializing in the manufacture of precast concrete parking appurtenances.

PART 2 - PRODUCTS

2.1 MATERIALS

A. Parking Bumpers:

1. Provide precast concrete parking bumpers conforming to the dimensions shown on the plans.

2. Bumpers shall be manufactured of air entrained concrete; 2,500 psi minimum compressive strength; approximately 4" high x 8" wide x 72" long, with a vertical hole in each end for anchorage as indicated on the plans.

3. Provide (2) #3 reinforcing bars running the length of the wheel stop. Anchor in place with two No. 4 bars, 16" long on asphalt paving. On concrete paving, use expansion bolts in place of drive pins No. 4 bars.

B. Adhesive: Adhesive for anchoring parking bumpers to pavement shall be an epoxy adhesive manufactured for the purpose, meeting the requirements of TXDOT DMS-6100, Type III.

C. Steel Bars for Installation: Epoxy coated rebar, No. 4 size, conforming to applicable requirements of Section 033000 – Cast-In-Place Concrete.

PART 3 - EXECUTION

3.1 INSTALLATION

A. Precast concrete parking bumpers shall be anchored in position on at-grade asphalt pavements, as indicated, with two No. 4 epoxy coated dowels and an appropriate epoxy adhesive as specified above.

B. Precast concrete bumpers shall be secured in position on at-grade concrete pavements, as indicated with an expansion bolts, and set parking bumper in a bed of epoxy grout.

END OF SECTION

SECTION 03100
CONCRETE FORMS AND ACCESSORIES

PART 1 - GENERAL

1.1 SUMMARY

A. Section Includes:
1. Formwork for cast-in place concrete
2. Shoring, bracing, and anchorage
3. Form accessories
4. Form stripping

B. Related Sections:
1. Section 03200 - Concrete Reinforcement
2. Section 03300 - Cast-in-Place Concrete
3. Section 05500 - Metal Fabrications: Product requirements for metal fabrications for placement by this Section

1.2 REFERENCES

A. American Concrete Institute:
1. ACI 117 - Standard Specifications for Tolerances for Concrete Construction and Materials
2. ACI 301 - Specifications for Structural Concrete
3. ACI 318 - Building Code Requirements for Structural Concrete
4. ACI 347 - Guide to Formwork for Concrete

B. ASTM International:
1. ASTM D1751 - Standard Specification for Preformed Expansion Joint Filler for Concrete Paving and Structural Construction (Nonextruding and Resilient Bituminous Types)

1.3 DESIGN REQUIREMENTS

A. Design, engineer and construct formwork, shoring and bracing to conform to design and code requirements to achieve concrete shape, line and dimension.

1.4 SUBMITTALS

A. Section 01330 - Submittal Procedures: Requirements for submittals.

B. Shop Drawings:
1. Submit formwork and shoring shop drawings.
2. Indicate the following:
   a. Pertinent dimensions, openings, methods of construction, types of connections, materials, joint arrangement and details, ties and shores, location of framing, studding and bracing, and temporary supports.

b. Means of leakage prevention for concrete exposed to view in finished construction.
c. Sequence and timing of erection and stripping assumed compressive strength at time of stripping, height of lift and height of drop during placement.
d. Vertical, horizontal and special loads in accordance with ACI 347, Section 2.2 and camber diagrams, when applicable.
e. Notes to formwork erector showing size and location of conduits and piping embedded in concrete in accordance with ACI 318, Section 6.3.

C. Product Data: Submit data on void form materials and installation requirements.
1. Submit Manufacturer's product data and installation instruction for proprietary materials used in exposed concrete work including form liners, release agents, form systems, ties and accessories.

D. Design Data: Indicate design data for formwork.

1.5 QUALITY ASSURANCE

A. Perform Work in accordance with ACI 347, ACI 301, ACI 117, and ACI SP-4.

B. For wood products furnished for work of this Section, comply with AF&PA.

C. Maintain one copy of each document on site.

1.6 COORDINATION

A. Section 01300 - Administrative Requirements: Coordination and project conditions.

B. Coordinate this Section with other sections of work, requiring attachment of components to formwork.

PART 2 - PRODUCTS

2.1 WOOD FORM MATERIALS

A. Form Materials: At discretion of Contractor.

B. Forms for Unexposed Concrete:
1. Construct formwork of plywood, lumber, metal, or other acceptable material. Lumber shall be dressed on at least two edges and one side for tight fit.

C. Forms for Exposed Concrete:
1. Construct formwork with plywood, metal, or other panel type materials designed to provide continuous straight and smooth as-cast surfaces with minimum number of joints. Joints shall be made tight and shall be backed so that edges of adjoining formwork remain flush. Joints shall be vertical or horizontal, unless noted otherwise.

2. Wood forms shall be constructed of 3/4 inch, APA B-B Plyform, Class 1, Exterior conforming to PS-1. Panels shall be mill oiled and all edges shall be sealed.

2.2 FORMWORK ACCESSORIES

A. Form Ties: Removable or Snap-off type, galvanized metal, cone type, with waterproofing washer, 1 inch back break dimension, free of defects capable of leaving holes larger than 1 inch in concrete surface.

B. Spreaders: Standard, non-corrosive metal form clamp assembly, of type acting as spreaders and leaving no metal within 1 inch of concrete face. Wire ties, wood spreaders or through bolts are not permitted.

C. Form Release Agent: Colorless material that will not stain concrete, or absorb moisture, or impair natural bonding or color characteristics of coating intended for use on concrete.

D. Corners: Chamfer, ¾ x ¾ inch size; maximum possible lengths.

E. Vapor Retarder: See Section 07260.

F. Bituminous Joint Filler: ASTM D1751.

G. Nails, Spikes, Lag Bolts, Through Bolts, Anchorages: Size, strength and character to maintain formwork in place while placing concrete.

H. Sleeves and Blockouts: Formed with galvanized metal, galvanized pipe, polyvinyl chloride pipe, or fiber tubes.

PART 3 - EXECUTION

3.1 EXAMINATION

A. Section 01300 - Administrative Requirements: Coordination and project conditions.

B. Verify lines, levels, and centers before proceeding with formwork. Verify dimensions agree with Drawings.

3.2 INSTALLATION

A. The design, construction, and safety of all form work shall be the responsibility of the general Contractor. All forms, shores, back shores, falsework, bracing, and other temporary supports shall be engineered to support all loads imposed including the wet weight of concrete, construction equipment, live loads, lateral loads due to wind and wet unbalanced concrete. The Contractor shall also be responsible for determining when temporary supports, shores, backshoring, and other bracing shall be safely removed

B. Earth Forms:

1. Earth forms are not acceptable at exposed concrete surfaces.
2. Trench earth forms neatly, accurately, and at least 2 inches wider than footing widths indicated on Drawings.
3. Trim sides and bottom of earth forms.
4. Construct wood edge strips at top of each side of trench to secure reinforcing and prevent trench from sloughing.
5. Form sides of footings where earth sloughs.
6. Tamp earth forms firm and clean forms of debris and loose material before depositing concrete.

C. Formwork - General:
1. Construct forms to correct shape and dimensions, mortar-tight, braced, and of sufficient strength to maintain shape and position under imposed loads from construction operations.
2. Carefully verify horizontal and vertical positions of forms. Correct misaligned or misplaced forms before placing concrete.

D. Erect formwork, shoring, and bracing to achieve design requirements, in accordance with requirements of ACI 301.

E. Arrange and assemble formwork to permit dismantling and stripping. Do not damage concrete during stripping. Permit removal of remaining principal shores.

F. Install chamfer strips on external corners.

G. Reuse of Forms:
1. Clean and repair surfaces of forms to be reused. Damaged forming material shall not be replaced and shall not be used in construction.
2. Apply form release agent to concrete contact surfaces prior to each reuse of the forms.

3.3 APPLICATION - FORM RELEASE AGENT

A. Apply form release agent on formwork in accordance with Manufacturer's recommendations.

B. Apply prior to placement of reinforcing steel, anchoring devices, and embedded items.

C. Do not apply form release agent where concrete surfaces are indicated to receive special finishes or applied coverings that are affected by agent. Soak inside surfaces of untreated forms with clean water. Keep surfaces coated prior to placement of concrete.

D. Reuse and Coating of Forms: Thoroughly clean forms and reapply form coating before each reuse. For exposed work, do not reuse forms with damaged faces or edges. Apply form coating to forms in accordance with Manufacturer’s specifications. Apply form coatings before placing reinforcing steel.

3.4 INSTALLATION - INSERTS, EMBEDDED PARTS, AND OPENINGS

A. Install formed openings for items to be embedded in or passing through concrete work.

B. Locate and set in place items required to be cast directly into concrete.

C. Coordinate with Work of other sections in forming and placing openings, slots, reglets, recesses, sleeves, bolts, anchors, other inserts, and components of other Work.

D. Install accessories straight, level, and plumb. Ensure items are not disturbed during concrete placement.

E. Provide temporary ports or openings in formwork where required to facilitate cleaning and inspection. Locate openings at bottom of forms to allow flushing water to drain.

F. Close temporary openings with tight fitting panels, flush with inside face of forms, and neatly fitted so joints will not be apparent in exposed concrete surfaces.

G. Form Ties:
1. Use sufficient strength and sufficient quantity to prevent spreading of forms.
2. Place ties at least 1 inch away from finished surface of concrete.
3. Leave inner rods in concrete when forms are stripped.
4. Space form ties equidistant, symmetrical and aligned vertically and horizontally unless otherwise shown on Drawings.

H. Arrangement: Arrange formwork to allow proper erection sequence and to permit form removal without damage to concrete.

I. Embedded Items:
1. Make provisions for pipes, sleeves, anchors, inserts, reglets, anchor slots, nailers, water stops, and other features.
2. Do not embed wood or uncoated aluminum in concrete.
3. Obtain installation and setting information for embedded items furnished under other Specification sections.
4. Securely anchor embedded items in correct location and alignment prior to placing concrete.
5. Verify conduits and pipes, including those made of coated aluminum, meet requirements of ACI 318, Section 6.3.

J. Openings for Items Passing Through Concrete:
1. Frame openings in concrete where indicated on Drawings. Establish exact locations, sizes, and other conditions required for openings and attachment of work specified under other sections.
2. Coordinate work to avoid cutting and patching of concrete after placement.
3. Perform cutting and repairing of concrete required as result of failure to provide required openings.

K. Screeds:

1. Set screeds and establish levels for tops of concrete slabs and levels for finish on slabs.
2. Slope slabs to drain where required or as shown on Drawings.
3. Before depositing concrete, remove debris from space to be occupied by concrete and thoroughly wet forms. Remove freestanding water.

3.5 FORM CLEANING

A. Clean forms as erection proceeds, to remove foreign matter within forms.

B. Clean formed cavities of debris prior to placing concrete.

C. Flush with water or use compressed air to remove remaining foreign matter. Ensure that water and debris drain to exterior through clean-out ports.

3.6 FORM REMOVAL

A. Do not remove forms or bracing until concrete has gained sufficient strength to carry its own weight and imposed loads and removal has been approved by Architect/Engineer.

B. Loosen forms carefully. Do not wedge pry bars, hammers, or tools against finish concrete surfaces scheduled for exposure to view.

C. Store removed forms in manner that surfaces to be in contact with fresh concrete will not be damaged. Discard damaged forms.

D. Leave forms in place for minimum number of days as specified in ACI 347.

3.7 ERECTION TOLERANCES

A. Construct formwork to maintain tolerances required by ACI 301.

B. Tolerances: Construct formwork to produce completed concrete surfaces within construction tolerances specified in ACI 117.
   1. Level alignment:
      a. Elevation of slabs-on-grade – less than ¾ inch
      b. Elevation of top surfaces of formed slabs before removal of shores – less than ¾ inch
      c. Elevation of formed surfaces before removal of shores – less than ¾ inch
      d. Lintels, sills, parapets, horizontal grooves, and other lines exposed to view - 1/2 inch

3.8 FIELD QUALITY CONTROL

A. Section 01400 - Quality Requirements and 01700 - Execution Requirements: Field inspecting, testing, adjusting, and balancing.

B. Inspect erected formwork, shoring, and bracing to ensure that work is in accordance with formwork design, and that supports, fastenings, wedges, ties, and items are secure.

C. Notify Architect/Engineer after placement of reinforcing steel in forms, but prior to placing concrete.

D. Schedule concrete placement to permit formwork inspection before placing concrete.

END OF SECTION

SECTION 03200
CONCRETE REINFORCEMENT

PART 1 - GENERAL

1.1 SUMMARY

A. Section includes:
   1. Reinforcing bars
   2. Welded wire fabric
   3. Reinforcement accessories

B. Related Sections:
   1. Section 03100 - Concrete Forms and Accessories
   2. Section 03300 - Cast-in-Place Concrete

1.2 REFERENCES

A. American Concrete Institute:
   1. ACI 301 - Specifications for Structural Concrete
   2. ACI 318 - Building Code Requirements for Structural Concrete
   3. ACI SP-66 - ACI Detailing Manual

B. ASTM International:
   1. ASTM A184/A184M - Standard Specification for Fabricated Deformed Steel Bar Mats for Concrete Reinforcement
   2. ASTM A497 - Standard Specification for Steel Welded Wire Fabric, Deformed, for Concrete Reinforcement
   3. ASTM A615/A615M - Standard Specification for Deformed and Plain Billet-Steel Bars for Concrete Reinforcement
   4. ASTM A706/A706M - Standard Specification for Low-Alloy Steel Deformed and Plain Bars for Concrete Reinforcement. Reinforcing bars to be welded

C. American Welding Society:
   1. AWS D1.4 - Structural Welding Code - Reinforcing Steel

D. Concrete Reinforcing Steel Institute:
   1. CRSI 63 - Manual of Standard Practice
   2. CRSI 65 - Placing Reinforcing Bars

1.3 SUBMITTALS

A. Section 01330 - Submittal Procedures: Submittal procedures.

B. Shop Drawings: Indicate bar sizes, spacings, locations, and quantities of reinforcing steel and welded wire fabric, bending and cutting schedules, and supporting and spacing devices.

C. Certificates: Submit AWS qualification certificate for welders employed on the Work.

D. Manufacturer's Certificate: Certify Products meet or exceed specified requirements.

E. Submit certified copies of mill test report of reinforcement materials analysis.

1.4 QUALITY ASSURANCE

A. Perform Work in accordance with CRSI - Manual of Standard Practice.

B. Maintain one copy of each document on site.

1.5 QUALIFICATIONS

A. Welders: AWS qualified within previous 12 months.

1.6 DELIVERY, STORAGE, AND HANDLING

A. Section 01600 - Product Requirements: Product storage and handling requirements.

B. Accept metal fabrications on site in labeled shipments. Inspect for damage.

C. Protect metal fabrications from damage by exposure to weather.

1.7 COORDINATION

A. Section 01300 - Administrative Requirements: Coordination and project conditions.

B. Coordinate with placement of formwork, formed openings and other Work.

PART 2 - PRODUCTS

2.1 REINFORCEMENT

A. Reinforcing Steel: ASTM A615, 60 ksi yield grade; deformed billet steel bars, galvanized in accordance with ASTM A767/A767M, Class II epoxy coated in accordance with ASTM A775/A775M finish.

B. Reinforcing Steel Plain Bar and Rod Mats: ASTM A704/A704M, ASTM A615/A615M, Grade 60; steel bars or rods, unfinished.

C. Stirrups Steel: ASTM A82, galvanized in accordance with ASTM A641/A641M finish.

D. Welded Steel Wire Fabric: ASTM A497 Deformed Type; in flat sheets; plain finish.

2.2 ACCESSORY MATERIALS

A. Tie Wire: Minimum 16 gage annealed type.

B. Chairs, Bolsters, Bar Supports, and Spacers: Sized and shaped for strength and support of reinforcement during concrete placement conditions including load bearing pad on bottom to prevent vapor retarder puncture.

C. Special Chairs, Bolsters, Bar Supports, Spacers Adjacent to Weather Exposed Concrete Surfaces: Plastic-coated steel or Stainless steel type; size and shape to meet Project conditions.

2.3 FABRICATION

A. Fabricate concrete reinforcement in accordance with CRSI Manual of Practice.

B. Weld reinforcement in accordance with AWS D1.4

C. Reinforcement: Clean surfaces, weld and re-protect welded joint in accordance with CRSI.

D. Locate reinforcement splices, at point of minimum stress.

2.4 FABRICATION OF EMBEDDED METAL ASSEMBLIES

A. Fabricate metal assemblies in the shop. Holes shall be made by drilling or punching. Holes shall not be made by or enlarged by burning. Welding shall be in accordance with AWS D1.1.

B. Welding of deformed bar anchors and headed stud anchors shall be done by full fusion process equal to that of TRW Nelson Stud Welding Division. A minimum of two headed studs shall be tested at the start of each production period for proper quality control. The studs shall be capable of being bent 45 degrees without failure.

C. Welding of reinforcement shall be done in accordance with AWS D1.4, using the recommended preheat temperature and electrode for the type of reinforcement being welded. Bars larger than no. 9 shall not be welded. Welding shall be subject to the observance and testing of the Testing Laboratory.

D. Metal assemblies shall be hot dip galvanized. Repair galvanizing after welding with a Cold Galvanizing compound installed in accordance with the Manufacturer's instructions.

PART 3 - EXECUTION

3.1 PLACEMENT

A. Place, support and secure reinforcement against displacement. Do not deviate from required position.

B. Do not displace or damage vapor retarder.

C. Accommodate placement of formed openings.

D. Maintain concrete cover around reinforcement as follows: as noted on Structural Drawings.

E. Conform to applicable code for concrete cover over reinforcement.

F. Before placing concrete, clean reinforcement to remove soil, loose rust, mill scale, ice, or other materials which reduce bond with concrete.

G. Accurately position reinforcement and secure reinforcement against displacement by construction or concrete placement operations.

H. Place reinforcement to obtain minimum concrete cover specified. Tie bars and bar supports together with tie wire to hold reinforcement in position. Set tie wires so that the twisted ends are directed away from exposed concrete surfaces.

I. Installation tolerances:
   1. Top and Bottom bars in slabs, girders, beams and joists
      a. Members 8” deep or less +/-3/8”
      b. Members more than 8" deep: "1/2"
   2. Concrete Cover to Formed or Finished Surfaces: "3/8" for members 8" deep or less; 1/2" for members over 8" deep, except that tolerance for cover shall not exceed 1/3 of the specified cover.

J. Concrete Cover: Refer to the Structural Notes on Drawings.

K. Welded Wire Fabric: Lap adjoining pieces at least one full mesh and lace splices with tie wire.

L. Splices: Refer to the Structural Notes on Drawings. Provide standard reinforcement splices by lapping and tying ends. Comply with ACI 318 for minimum lap of spliced bars where not specified on the documents.

M. Welding of Reinforcing Steel: Comply with the requirements of AWS D1.4 for field welding. Only steel conforming to ASTM A706 may be welded.

N. Field Welding of Embedded Metal Assemblies: All paint and galvanizing shall be removed in areas to receive field welds. All areas where paint or galvanizing has been removed shall be field repaired with the specified paint or cold galvanizing compound, respectively.

O. Bond and ground reinforcement in accordance with requirements of Section 16060.

3.2 FIELD QUALITY CONTROL

A. Section 01400 - Quality Requirements: Testing and Inspection Services and 01700 - Execution Requirements: Testing and adjusting etc.

END OF SECTION

SECTION 03300
CAST-IN-PLACE CONCRETE

PART 1 - GENERAL

1.1 SUMMARY

A. Section includes cast-in-place concrete for the following:
1. Foundation walls
2. Slabs on grade
3. Control, expansion and contraction joint devices
4. Equipment pads
5. Light pole base
6. Flagpole base
7. Manholes

B. Related Sections:
1. Section 03100 - Concrete Forms and Accessories: Formwork and accessories
2. Section 03200 - Concrete Reinforcement
3. Section 07900 - Joint Sealers

1.2 REFERENCES

A. American Concrete Institute:
1. ACI 301 - Specifications for Structural Concrete
2. ACI 304 – Guide for Measuring, Mixing, Transporting and Placing Concrete
3. ACI 305 - Hot Weather Concreting
4. ACI 305 - Hot Weather Concreting
5. ACI 306 - Cold Weather Concreting
6. ACI 308 - Standard Practice for Curing Concrete
7. ACI 309 - Recommended Practice for Consolidation of Concrete
8. ACI 306.1 - Standard Specification for Cold Weather Concreting
9. ACI 318 - Building Code Requirements for Structural Concrete

B. ASTM International:
1. ASTM C33 - Standard Specification for Concrete Aggregates
2. ASTM C94 - Standard Specification for Ready-Mixed Concrete
3. ASTM C150 - Standard Specification for Portland Cement
4. ASTM C260 - Standard Specification for Air-Entraining Admixtures for Concrete
5. ASTM C330 - Standard Specification for Lightweight Aggregates for Structural Concrete
6. ASTM C494 - Standard Specification for Chemical Admixtures for Concrete
7. ASTM C595 - Standard Specification for Blended Hydraulic Cements
8. ASTM C618 - Standard Specification for Coal Fly Ash and Raw or Calcined Natural Pozzolan for Use as a Mineral Admixture in Portland Cement Concrete
9. ASTM C1017 - Standard Specification for Chemical Admixtures for Use in Producing Flowing Concrete

10. ASTM D1752 - Standard Specification for Preformed Sponge Rubber and Cork Expansion Joint Fillers for Concrete Paving and Structural Construction
11. ASTM E1643 - Standard Practice for Installation of Water Vapor Retarders Used in Contact with Earth or Granular Fill under Concrete Slabs
12. ASTM E1745 - Standard Specification for Plastic Water Vapor Retarders Used in Contact with Soil or Granular Fill under Concrete Slabs

1.3 SUBMITTALS

A. Section 01330 - Submittal Procedures: Submittal procedures.

B. Product Data: Submit data on joint devices, attachment accessories, and admixtures.

C. Design Data:
1. Submit concrete mix design for each concrete strength. Submit separate mix designs when admixtures are required for the following:
   a. Hot and cold weather concrete work
   b. Air entrained concrete work
2. Identify mix ingredients and proportions, including admixtures.
3. Submit proposed mix designs prepared in accordance with ACI 301, Chapter 3.9. Each proposed mix design shall be accompanied by a complete standard deviation analysis based on at least 30 consecutive strength tests, or by three laboratory trial mixtures with confirmation tests.

D. Construction Joints: Submit a diagram of proposed construction joints other than those indicated on the Drawings.

E. Fly ash: Submit certification attesting to carbon content and compliance with ASTM C618.

F. Manufacturer's Installation Instructions: Submit installation procedures and interface required with adjacent Work.

1.4 CLOSEOUT SUBMITTALS

A. Section 01700 - Execution Requirements: Closeout procedures.

B. Project Record Documents: Accurately record actual locations of embedded utilities and components concealed from view in finished construction.

1.5 QUALITY ASSURANCE

A. Perform Work in accordance with ACI 301.

B. Comply with governing codes and regulations. Provide products of acceptable Manufacturers that have been in satisfactory use in similar service for three years. Use experienced Installers. Deliver, handle, and store materials in accordance with Manufacturer's instructions.

C. Testing: Employ an independent testing agency acceptable to Owner to design concrete mixes and to perform material evaluation tests. Provide 7 and 28 day cylinder tests. Comply with ASTM C 143, C 173, C 31 and C 39.

D. Maintain one copy of each document on site.

E. Acquire cement and aggregate from one source for Work.

F. Conform to ACI 305 when concreting during hot weather.

G. Conform to ACI 306.1 when concreting during cold weather.

H. Testing: Independent Testing Laboratory
   1. Contractors responsibilities to testing laboratory:
      a. Furnish labor and materials as required to assist testing agency in obtaining, making and handling samples at the jobsite.
      b. Advise the testing agency sufficiently in advance of operations to allow testing agency adequate time for the assignment of testing personnel.
      c. Furnish and maintain adequate facilities for the proper curing of concrete test specimens on the project site in accordance with ASTM C31.

I. Evaluation and Acceptance:
   1. The strength level of the concrete will be considered satisfactory if the averages of all sets of three consecutive strength test results equal or exceed the specified strength and no individual test result (average of two cylinders) is below the specified strength by more than 500 psi.
   2. When the strength level of the concrete for any portion of the structure, as indicated by cylinder tests, falls below the specified requirements, the Contractor shall provide improved curing conditions and/or adjustments to the mix design as required to obtain the required strength. If the average strength of the laboratory control cylinders falls so low as to be deemed unacceptable, the Contractor shall follow the core test procedure set forth in ACI 301, Chapter 17. Locations of core tests shall be approved by the Architect. Core sampling and testing shall be at Contractors expense.
      a. If the results of the core tests indicate that the strength of the structure is inadequate, any replacement, load testing, or strengthening as may be ordered by the Architect / Engineer shall be provided by the Contractor without cost to the Owner.

1.6 CONCRETE MIX DESIGNS

A. Selection of Proportions: Proportions of ingredients for concrete mixes shall be determined by an Independent testing laboratory or qualified concrete supplier in accordance with the requirements of ACI 301, chapter 3. If testing laboratory provides concrete mix designs, it shall be selected by the Contractor, approved by the Architect, and paid by the Contractor.

B. Required average strength above specified strength: Determination of required average strength above specified strength shall be based on the standard deviation record of the

production facility in accordance with ACI 301. Calculation of standard deviation of compressive strength results shall be made in accordance with ACI 214. If a suitable record of strength tests is not available, proportions shall be selected on the basis of laboratory trial batches to produce an average strength greater than the specified strength f'c by the amount defined in ACI 301, Table 3.9.2.2.

C. All concrete mix designs shall include the following information:
1. Proportions of cement, fine and coarse aggregates, and water
2. Maximum water/cement ratio, design strength, maximum slump, and air content
3. Type cement and aggregates
4. Type and quantities of all admixtures
5. Any special requirements for pumping
6. Any special characteristics of the mix which require precautions in the mixing, placing, or finishing techniques to achieve the finished product specified

1.7 COORDINATION

A. Section 01300 - Administrative Requirements: Coordination and project conditions.

B. Coordinate placement of joint devices with erection of concrete formwork and placement of form accessories.

PART 2 - PRODUCTS

2.1 CONCRETE MATERIALS

A. Cement: ASTM C150, Type I - Normal Portland type; ASTM C595.

B. Fine and Coarse Aggregates: ASTM C33.

C. Lightweight Aggregate: ASTM C330.

D. Fly ash conforming to ASTM C618 may be used in non-architecturally exposed concrete. Carbon content shall not exceed (3) three percent by volume.

E. Water: Clean and not detrimental to concrete.

2.2 ADMIXTURES

A. Do not use admixtures which have not been incorporated and tested in accepted mixes.
a. Calcium chloride admixtures are not permitted.
b. Thiocyanates and admixtures containing more than 0.05 percent chloride ions shall not be used in the concrete mix.

B. Air Entrainment: ASTM C260.

C. Set Controlling Admixtures: ASTM C494
1. Type A - Water Reducing

2. Type D - Water Reducing and Retarding
3. Type E - Water Reducing and Accelerating
4. Type F - Water Reducing, High Range Admixtures
5. Type G - Water Reducing, High Range and Retarding Admixtures

D. Fly Ash: ASTM C618 Class F.

2.3 ACCESSORIES

A. Bonding Agent: Polyvinyl Acetate or Two component modified epoxy resin.

B. Vapor Retarder: See Section 07260.

C. Curing Materials: Liquid Membrane-Forming Curing Compound: ASTM C 309, Type 1, Class A. or Water-Based Acrylic Membrane Curing Compound: ASTM C 309, Type 1, Class B. Material providing water retention not exceeding loss of 0.055 gm/cm2 in 72 hours when used at a coverage of 200 square feet per gallon and tested in accordance with ASTM C156.

1. Curing compound shall conform to the requirements of ASTM C309. Curing compound used on exposed concrete shall be non-discoloring and shall not darken or yellow with age.
2. Dissipating curing compound shall be liquid membrane forming compound complying with ASTM C309, which provides an initial cure for concrete, then begins to chemically break down and wear off the surface within 6 to 8 weeks. Acceptable products are: AKurez DR@ by the Euclid Chemical Company or approved equal.

D. Non-Shrink Grout: ASTM C1107, Grade B; premixed compound consisting of non-metallic aggregate, cement, water reducing and plasticizing agents; capable of developing minimum compressive strength of 2,400 psi in 48 hours and 7,000 psi in 28 days.

E. Epoxy Adhesive: Conforming to ASTM C881. "Euco Epoxy 452 or 620," by the Euclid Chemical Company, "Sikadur 32, Hi-Mod," by the Sika Corporation, or approved equal. The compound shall be a two component, 100 percent solids compound suitable for use on dry or damp surfaces.

F. Waterstops: Rubber or PVC water stops. At all construction joints below grade. Dumbbell type with center bulb.

G. Evaporation retarder for hot weather curing monomolecular film-forming compound shall be a spray applied liquid film "Confilm" by Master Builders, or approved equal.

H. Reglets: Galvanized sheet steel reglets, minimum 26 gage (.018 inch).

I. Non-slip Aggregate Finish: Fused aluminum oxide granules or crushed emery.

J. Underlayment Compound: Free-flowing, self-leveling cement-based compound.

2.4 CONCRETE MIX

A. Mix and deliver concrete in accordance with ASTM C94, Option C.

B. Provide concrete to the following criteria:

Unit	Measurement
Compressive Strength (28 day)	3,000 psi

1. Beams, Walls, Foundations, and Footings: 3000 psi
2. Slabs on Grade: 3000 psi
3. Paving Base: 3500 psi
4. Exterior Site Concrete and Pads Exposed to Weather: 3500 psi

C. Admixtures: Include admixture types and quantities indicated in concrete mix designs approved through submittal process.
1. Use accelerating admixtures in cold weather only when approved by Engineer / Architect. Use of admixtures will not relax cold weather placement requirements.
2. Calcium chloride is not permitted.
3. Use set retarding admixtures during hot weather only when approved by Engineer / Architect.
4. Add air entraining agent to normal weight concrete mix for work exposed to exterior.

PART 3 - EXECUTION

3.1 EXAMINATION

A. Section 01300 - Administrative Requirements: Coordination and project conditions.

B. Verify requirements for concrete cover over reinforcement.

C. Verify anchors, seats, plates, reinforcement and other items to be cast into concrete are accurately placed, positioned securely, and will not interfere with placing concrete.

3.2 PLACING CONCRETE

A. Concrete shall not be mixed for placing until the mix designs and corresponding strength tests for each class of concrete have been accepted by the Architect for use on the project.

B. Mix concrete in accordance with ASTM C94.

C. Place concrete in accordance with ACI 301 and ACI 304.

D. Notify Architect/Engineer minimum 48 hours prior to commencement of operations.

E. Ensure reinforcement, inserts, embedded parts, formed expansion and contraction joints, are not disturbed during concrete placement.

F. Install vapor retarder under interior slabs on grade in accordance with ASTM E1643. Lap joints minimum 6 inches and seal watertight by taping edges and ends.

G. Repair vapor barrier damaged during placement of concrete reinforcing. Repair with vapor barrier material; lap over damaged areas minimum 6 inches and seal watertight.

H. Anchor bolts: Install anchor bolts as shown on the approved shop drawings. Use templates to set anchor bolts and secure into position before placing concrete. Do not stab anchor bolts into concrete. Anchor bolts shall be placed within the following tolerances measured after concrete placement:

1. Spacing within a bolt group: 1/8"
2. Location of bolt group (center): 1/2"
3. Rotation of bolt group: 5 degrees
4. Angle off vertical: 5 degrees
5. Bolt projection: 3/8"

I. Pump priming grout shall be discarded and not used in the structure.

J. Do not permit concrete to drop freely any distance greater than 10'-0" for concrete containing a high range water reducing admixture (superplasticizer) or 5'-0" for other concrete. Provide chute or tremie to place concrete where longer drops are necessary. Do not place concrete into excavations with standing water. If place of deposit cannot be pumped dry, pour concrete through a tremie with its outlet near the bottom of the place of deposit.

K. Vibration: As soon as concrete is deposited vibrate concrete with mechanical vibrators. Do not over vibrate or use vibrators to transport concrete within forms. Insert and withdraw vibrators at regular intervals from 18" to 30" apart. At each insertion the duration shall not be sufficient to cause segregation, generally from 5 to 15 seconds duration. A spare vibrator shall be kept on the jobsite during all concrete placing operations.

L. Prepare previously placed concrete by cleaning with steel brush and applying water or bonding agent. Apply bonding agent in accordance with Manufacturer's instructions.

M. Construction Joints: Except as otherwise specifically indicated on the drawings, each concrete member shall be considered as a single unit, and all concrete for the same shall be placed continuously in order that such unit will be monolithic in construction. Should construction joints prove to be absolutely unavoidable, the joints shall be located at or near midspan of the beams, joists, or slabs. Additional construction joints must be submitted for review by the Architect.

N. Separate slabs on grade from vertical surfaces with joint filler.

O. Place joint filler in floor slab. Set top to required elevations. Secure to resist movement by wet concrete.

P. Apply sealants in joint devices in accordance with Section 07900.

Q. Maintain records of concrete placement. Record date, location, quantity, air temperature, and test samples taken.

R. Place concrete continuously between predetermined expansion, control, and construction joints.

S. Do not interrupt successive placement; do not permit cold joints to occur.

T. Control Joints: Provide sawn or tooled joints or removable insert strips; depth equal to 1/4 slab thickness. Spacing as required and approved.

U. Saw cut joints within 12 hours after placing. Use 3/16 inch thick blade, cut into 1/4 depth of slab thickness.

V. Screed slabs on grade level, maintaining surface flatness of maximum 1/8 inch in 10 ft.

W. Chamfer exposed edges/corners to provide straight lines.

X. Construction Joints: Use keyways, continue reinforcement through joint.

Y. Expansion Joints: For exterior works locate 30' o.c. at approved locations. Provide smooth dowels across joint which permit 1" horizontal movement and no vertical shear movement.

Z. Isolation Joints: Provide between slabs and vertical elements such as columns and structural walls.

AA. Mixing time: Unless otherwise approved by the laboratory inspector, discharge shall be completed within 90 minutes after the introduction of water to the cement.

3.3 CONCRETE FINISHING

A. Finish concrete floor surfaces to requirements of Section 03350.

B. Provide formed concrete surfaces to be left exposed with smooth rubbed finish as Scheduled in this section.

1. Wall Finishes: As cast and patched for concealed work; rubbed smooth, filled and cement paste coated for exposed work.

C. Wood float surfaces receiving ceramic tile with full bed setting system.

D. Steel trowel surfaces receiving carpeting, resilient flooring, seamless flooring, thin set quarry tile, or thin set ceramic tile.

E. Steel trowel surfaces which are indicated to be exposed.

F. In areas with floor drains, maintain floor elevation at walls; pitch surfaces uniformly to drains at 1/8 inch per foot nominal and as indicated on drawings.

3.4 CURING AND PROTECTION

A. Immediately after placement, protect concrete from premature drying, excessively hot or cold temperatures, and mechanical injury.

B. Maintain concrete with minimal moisture loss at relatively constant temperature for period necessary for hydration of cement and hardening of concrete.

C. Cure floor surfaces in accordance with ACI 301.

D. Spraying: Spray water over floor slab areas and maintain wet for 7 days.

E. Cure and protect work. Report defective work in writing.

3.5 FIELD QUALITY CONTROL

A. Section 01400 - Quality Requirements: Testing and Inspection Services and 01700 - Execution Requirements: Testing, adjusting, and balancing.

B. Field inspection and testing will be performed in accordance with ACI 301 and under provisions of Section 01400.

C. Provide free access to Work and cooperate with appointed firm.

D. Submit proposed mix design of each class of concrete to Architect / Engineer and inspection and testing firm for review prior to commencement of Work. Do not change mix design with review and approval by Architect / Engineer.

E. Tests of cement and aggregates may be performed to ensure conformance with specified requirements.

F. Three concrete test cylinders will be taken for every 75 or less cu yds of each class of concrete placed.

G. One additional test cylinder will be taken during cold weather concreting, cured on job site under same conditions as concrete it represents.

H. One slump test will be taken for each set of test cylinders taken.

I. One air content test will be made for each set of test cylinders taken.

J. Maintain records of concrete placement. Record date, location, quantity, air temperature and test samples taken.

3.6 QUALITY CONTROL TESTING DURING CONSTRUCTION

A. General: The Contractor will employ a testing agency to perform tests and to submit test reports. Reference Section 01410 Testing Laboratory Services.

B. Sampling and testing for quality control during concrete placement may include the following, as directed by Architect.
   1. Sampling Fresh Concrete: ASTM C 172, except modified for slump to comply with ASTM C94.
   2. Slump: ASTM C 143: one test at point of discharge for each day's pour of each type of concrete; additional tests when concrete consistency seems to have changed.
   3. Air Content: ASTM C 173, volumetric method for lightweight or normal weight concrete; ASTM C 231, pressure method for normal weight concrete, one for each day's pour of each type of air-entrained concrete.
   4. Concrete Temperature: ASTM C 1064; one test hourly when air temperature is 40 deg. F (4 deg. C) and below, when 80 deg. F (27 deg. C) and above, and one test for each set of compressive-strength specimens.
   5. Compression Test Specimen: ASTM C 31; one set of four standard cylinders for each compressive-strength test, unless otherwise directed. Mold and store cylinders for laboratory0cured test specimens except when field-cured test specimens are required.
   6. Compressive-Strength Tests: ASTM C 39; one set for each day's pour exceeding 5 cubic yard plus additional sets for each 50 cubic yard more than the first 25 cubic yard of each concrete class placed in any one day; one specimen tested at 7 days, two specimens tested at 28 days, and one specimen retained in reserve for later testing if required.
      a. When frequency of testing will provide fewer than five strength tests for a given class of concrete, conduct testing from at least five randomly selected batches or from each batch if fewer than five are used.
      b. When total quantity of a given class of concrete is less than 50 cubic yards, Architect may waive strength testing if adequate evidence of satisfactory strength is provided.
      c. When strength of field-cured cylinders is less than 85% of companion laboratory-cured cylinders, evaluate current operations and provide corrective procedures for protecting and curing the in-place concrete.
      d. Strength level of concrete will be considered satisfactory if averages of sets of three consecutive strength test results equal or exceed specified compressive strength and no individual strength test result falls below specified compressive strength by more than 500 psi.

C. Test results will be reported in writing to Architect, Structural Engineer, ready-mix producer, and Contractor within 24 hours after tests. Reports of compressive strength tests shall contain the Project identification name and number, date of concrete placement, name of concrete testing service, concrete type and class, location of concrete batch in structure, design compressive strength at 28 days, concrete mix proportions and materials, compressive breaking strength, and type for break for both 7-day tests and 28-day tests.

D. Non-destructive Testing: Impact hammer, sonoscope, or other non-destructive device may be permitted but shall not be used as the sole basis for acceptance or rejection.

E. Additional Tests: The testing agency will make additional tests of in-place concrete when test results indicate specified concrete strengths and other characteristics have not

been attained in the structure, as directed by Architect. Testing agency may conduct tests to determine adequacy of concrete by cored cylinders complying with ASTM C 42, or by other method as directed.

3.7 PATCHING

A. Allow Architect/Engineer to inspect concrete surfaces immediately upon removal of forms.

B. Excessive honeycomb or embedded debris in concrete is not acceptable. Notify Architect/Engineer upon discovery.

C. Patch imperfections as directed by Architect / Engineer in accordance with ACI 301.

3.8 DEFECTIVE CONCRETE

A. Defective Concrete: Concrete not conforming to required lines, details, dimensions, tolerances or specified requirements.

B. Repair or replacement of defective concrete will be determined by Architect/Engineer.

C. Do not patch, fill, touch-up, repair, or replace exposed concrete except upon express direction of Architect / Engineer for each individual area.

3.9 CONCRETE SURFACE REPAIRS

A. General: Provide exposed-to-view concrete formed surfaces of such quality as to require a minimum of pointing. Exercise care in the forming, mixing and placing of concrete to assure reasonably uniform surfaces free of blemishes and defects. Repair unsightly voids or honeycombing using approved methods. Fins and other projections shall be neatly dressed off. Form offsets greater than the specified tolerances shall be ground down.

B. Patching Defective Areas: Repair and patch defective areas with cement mortar immediately after removing forms, when acceptable to Architect / Engineer.

C. Mix dry-pack mortar, consisting of one part Portland cement to 2-1/2 parts fine aggregate passing a No. 16 mesh sieve, using only enough water as required for handling and placing.

D. Cut out honeycombs, rock pockets, voids over 1/4 inch in any dimension, and holes left by tie rods and bolts down to solid concrete but in no case to a depth less than 1 inch. Make edges of cuts perpendicular to the concrete surface. Thoroughly clean, dampen with water, and brush-coat the area to be patched with bonding agent. Place patching mortar before bonding agent has dried.

E. For surfaces exposed to view, blend white Portland cement and standard Portland cement so that, when dry, patching mortar will match surrounding color. Provide test areas at inconspicuous locations to verify mixture and color match before proceeding

with patching. Compact mortar in place and strike-off slightly higher than surrounding surface.

F. Repairing Formed Surfaces: Remove and replace concrete having defective surfaces if defects cannot be repaired to satisfaction of Architect / Engineer. Surface defects include color and texture irregularities, cracks, spalls, air bubbles, honeycomb, rock pockets, fins and other projections on the surface, and stains and other discolorations that cannot be removed by cleaning. Flush out form tie holes and fill with dry-pack mortar or pre-cast cement cone plugs secured in place with bonding agent.

G. Repair concealed formed surfaces, where possible, containing defects that affect the concrete's durability. If defects cannot be repaired, remove and replace the concrete.

H. Repairing Unformed Surfaces: Test unformed surfaces, such as monolithic slabs, for smoothness and verify surface tolerances specified for each surface and finish. Correct low and high areas as specified. Test unformed surfaces sloped to drain for trueness of slope and smoothness by using a template having the required slope.

I. Repair finished unformed surfaces containing defects that affect the concrete's durability. Surface defects include crazing and cracks in excess of 0.01 inch wide or that penetrate to the reinforcement or completely through non-reinforced sections regardless of width, spalling, popouts, honeycombs, rock pockets, and other objectionable conditions.

J. Correct high areas in unformed surfaces by grinding after concrete has cured at least 14 days.

K. Correct low areas in unformed surfaces during or immediately after completing surface finishing operations by cutting out low areas and replacing with patching mortar. Finish repaired areas to blend into adjacent concrete. Proprietary underlayment compounds may be used when acceptable to Architect.

L. Repair defective areas, except random cracks and single holes not exceeding 1 inch in diameter, by cutting out and replacing with fresh concrete. Remove defective areas with clean, square cuts and expose reinforcing steel with at least 3/4-inch clearance all around. Dampen concrete surfaces in contact with patching concrete and apply bonding agent. Mix patching concrete of same materials to provide concrete of same type or class as original concrete. Place, compact, and finish to blend with adjacent finished concrete. Cure in same manner as adjacent concrete.

M. Repair isolated random cracks and single holes 1 inch or less in diameter by dry-pack method. Groove top of cracks and cut out holes to sound concrete and clean of dust, dirt, and loose particles. Dampen cleaned concrete surfaces and apply bonding compound. Place dry-pack before bonding agent has dried. Compact dry-pack mixture in place and finish to match adjacent concrete. Keep patched area continuously moist for at least 72 hours.

N. Perform structural repairs with prior approval of Architect / Engineer for method and procedure, using specified epoxy adhesive and mortar.

O. Repair methods not specified above may be used, subject to acceptance of Architect / Engineer.

3.10 CLEANUP

A. Imperfect or damaged work or any material damaged or determined to be defective before final completion and acceptance of the entire job, shall be satisfactorily replaced at the Contractor's expense, and in conformity with all of the requirements of the Drawings and Specifications. Removal and replacement of concrete work shall be done in such manner as not to impair the appearance or strength of the structure in any way.

B. Cleaning: Upon completion of the work all forms, equipment, protective coverings and any rubbish resulting there from shall be removed from the site. After sweeping floors, wash floors with clean water. Finished concrete surfaces shall be left in a clean condition, satisfactory to the Owner.

END OF SECTION

SECTION 03350
CONCRETE FINISHING

PART 1 - GENERAL

1.1 SUMMARY

A. Section Includes:
   1. Finishing concrete floors
   2. Floor surface treatment

B. Related Sections:
   1. Section 03300 - Cast-in-Place Concrete
   2. Section 07900 - Joint Sealers

1.2 REFERENCES

A. American Concrete Institute:
   1. ACI 301 - Specifications for Structural Concrete
   2. ACI 302.1 - Guide for Concrete Floor and Slab Construction

B. ASTM International:
   1. ASTM E1155 - Standard Test Method for Determining Floor Flatness and of Levelness Using the F-number System

1.3 SUBMITTALS

A. Section 01330 - Submittal Procedures: Submittal procedures.

B. Product Data: Submit data on sealer, curing compounds, compatibilities, and limitations.

C. Installer qualifications.

1.4 CLOSEOUT SUBMITTALS

A. Section 01700 - Execution Requirements: Closeout procedures.

B. Operation and Maintenance Data: Submit data on maintenance renewal of applied coatings.

1.5 QUALITY ASSURANCE

A. Perform Work in accordance with ACI 301 and ACI 302.1.

B. Maintain one copy of each document on site.

1.6 QUALIFICATIONS

A. Manufacturer: Company specializing in manufacturing Products specified in this section with minimum three years documented experience.

B. Installer: Company specializing in performing work of this section with minimum three years documented experience.

1.7 DELIVERY, STORAGE, AND HANDLING

A. Section 01600 - Product Requirements: Product storage and handling requirements.

B. Deliver materials in Manufacturer's packaging including application instructions.

1.8 ENVIRONMENTAL REQUIREMENTS

A. Section 01600 - Product Requirements: Environmental conditions affecting products on site.

B. Temporary Lighting: Minimum 200 W light source, placed 8 feet above floor surface, for each 425 sq ft of floor being finished, as needed for finishing.

1.9 COORDINATION

A. Section 01300 - Administrative Requirements: Coordination and project conditions.

B. Coordinate the Work with concrete floor placement and concrete floor curing.

PART 2 - PRODUCTS

2.1 MANUFACTURERS

A. Manufacturers:
1. Euclid Chemical Co.
2. Master Builders Inc.
3. Sika Corp.
4. Substitutions: Section 01600 - Product Requirements.

PART 3 - EXECUTION

3.1 EXAMINATION

A. Section 01300 - Administrative Requirements: Coordination and project conditions.

B. Verify floor surfaces are acceptable to receive the Work of this section.

3.2 FLOOR FINISHING

A. Finish concrete floor surfaces in accordance with ACI 301 and ACI 302.1.

B. Wood float surfaces receiving tile with full bed setting system.

C. Steel trowel surfaces receiving carpeting, resilient flooring, seamless flooring, and thin set ceramic tile.

D. Steel trowel surfaces which are indicated to be exposed.

E. In areas with floor drains, maintain design floor elevation at walls; slope surfaces uniformly to drains at 1/8 inch per foot and as indicated on Drawings.

F. Highway straightedges are recommended for use in lieu of bullfloats for all slab placement and finishing operations.

G. Screeding: Immediately after placing, slab shall be vibrated and struck off true by double screeding to the required level, at or below the elevation or grade of the finished slabs as indicated on the Drawings. Vibrators shall not be used to spread the concrete.

H. Straightedging: Immediately after screeding and before excess bleed water is present on the surface, straighten the surface using a highway straightedge.

I. Edging and jointing, where required, shall be done after bleed water has evaporated and before further finishing.

J. Float Finish
   1. Locations: All concrete surfaces under waterproofing membrane, setting beds for brick, mud- set tile, pavers, or terrazzo, and noncomposite topping slabs.
   2. Finishing: After concrete has stiffened sufficiently, and after bleed water has disappeared, the surface shall be wood floated at least twice to produce a uniform texture with no coarse aggregate visible. Use hand floats or power machine floats, applying sufficient pressure to bring the moisture to the surface.

K. Trowel Finish
   1. Locations: Exposed concrete floors not otherwise specified, concrete surfaces under carpets, vinyl tile, thin set tile, wood flooring, elastomeric coatings, and painted concrete floors, and roof slabs that are future floors.
   2. Finishing: After concrete has stiffened sufficiently to permit operation and after bleed water has disappeared, hand or machine float the surface. Follow immediately by steel troweling at least twice with hand or machine trowels.

L. Broom Finish
   1. Locations: Exterior stairs, ramps, walks, curbs, islands, parking and drive areas, and other locations noted on the Drawings.
   2. Finishing: Same method as specified for trowel finish, except after initial troweling brush concrete surfaces with soft brush or broom to texture specified

by the Architect. Striations shall run in the direction of the drainage slope, if any, unless otherwise specified.

3.3 TOLERANCES

A. Section 01400 - Quality Requirements: Tolerances.

B. Maximum Variation of Surface Flatness For Exposed Concrete Floors: 1/8 inch in 10 ft .

C. Maximum Variation of Surface Flatness Under Seamless Resilient Flooring: 1/8 inch in 10 ft.

D. Maximum Variation of Surface Flatness Under Carpeting: 1/8 inch in 10 ft.

E. Correct defects in defined traffic floor by grinding or removal and replacement of defective Work. Areas requiring corrective Work will be identified. Re-measure corrected areas by same process.

F. All floors are subject to measurement for flatness and levelness and shall comply with the following:
   1. Slabs shall be flat within a tolerance of 1/8” in 10’-0” when tested with a ten foot long straightedge. Apply straightedge to the slab at 3’-0” intervals in both directions, lapping straightedge 3’-0” on areas previously checked. Low spots shall not exceed the above dimension anywhere along the straightedge. Flatness shall be checked the next work day after finishing.
   2. Slabs shall be level within a tolerance of plus or minus 1/8” in 10’- 0”, not to exceed ¾” total variation, anywhere on the floor, from elevations indicated on the Drawings. Levelness shall be checked on a 10’-0” grid using a level after removal of forms.

G. Floor Elevation Tolerance Envelope:
   1. The acceptable tolerance envelope for absolute elevation of any point on the slab surface, with respect to the elevation shown on the Drawings, is as follows:
      a. Slab-on-Grade Construction: +/- ¾”
      b. Top surfaces of formed slabs measured prior to removal of supporting shores: +/- ¾”
      c. Top surfaces of all other slabs: +/- ¾”
      d. Slabs specified to slope shall have a tolerance from the specified slope of 1/8” in 10’-0” at any point, up to ¾” from theoretical elevation at any point.

H. Remedial Measures for Slab Finish Construction not Meeting Specified Tolerances:
   1. Application of Remedial Measures. Remedial measures specified herein are required whenever specified tolerances are exceeded
   2. Modification of Existing Surface:
      a. If, in the opinion of the Architect or Owner’s representative, all or any portion of the substandard work can be repaired without sacrifice to the appearance or serviceability of the area, the Contractor shall immediately undertake the approved repair method.

b. The Contractor shall submit for review and approval a detailed work plan of the proposed repair showing areas to be repaired, method of repair, and time required to make the repair.
c. Repair method(s), at the sole discretion of the Architect or Owner's Representative, may include grinding (floor stoning), planing, retopping with specified floor leveling compound, or any combination of the above.
d. All repair work shall be performed at no additional cost to the Owner and with no extension to the construction schedule.

3. Removal and Replacement:
   a. If, in the opinion of the Architect/Engineer or Owner's Representative, all or any portion of the substandard work cannot be satisfactorily repaired without sacrifice to the appearance or serviceability of the area, the Contractor shall remove and replace the defective work as directed.
   b. Replacement sections may be retested for compliance at the discretion of the Architect/Engineer or Owner's Representative.
   c. All replacement work shall be performed at no additional cost to the Owner and with no extension to the construction schedule.

END OF SECTION

SECTION 05312
STEEL ROOF DECK

PART 1 - GENERAL

1.1 SUMMARY

A. Section Includes:
1. Steel roof deck and accessories
2. Formed steel cant strips, eave strips, and valley strips
3. Framing for openings up to and including 18 inches
4. Bearing plates and angles.

B. Related Sections:
1. Section 05500 – Metal Fabrication
2. Section 13120 - Pre-Engineered Building.

1.2 REFERENCES

A. ASTM International:
1. ASTM A36/A36M - Standard Specification for Carbon Structural Steel
2. ASTM A653/A653M - Standard Specification for Steel Sheet, Zinc-Coated (Galvanized) or Zinc-Iron Alloy-Coated (Galvannealed) by the Hot-Dip Process
3. ASTM A924/A924M - Standard Specification for General Requirements for Steel Sheet, Metallic-Coated by the Hot-Dip Process
4. ASTM A1008/A1008M - Standard Specification for Steel, Sheet, Cold-Rolled, Carbon, Structural, High-Strength Low-Alloy and High-Strength Low-Alloy with Improved Formability.

B. American Welding Society:
1. AWS D1.1 - Structural Welding Code - Steel.

C. Steel Deck Institute:
1. SDI 29 - Design Manual for Composite Decks, Form Decks and Roof Decks.

D. SSPC: The Society for Protective Coatings:
1. SSPC Paint 15 - Steel Joist Shop Paint.

1.3 PERFORMANCE REQUIREMENTS

A. Design metal deck in accordance with SDI Design Manual.

B. Calculate to maximum structural working stress design of 20,000 psi and maximum vertical deck deflection of 1/360.

C. Design deck with maximum lateral diaphragm deflection of 1/500 of wall height.

1.4 SUBMITTALS

A. Section 01330 - Submittal Procedures: Submittal requirements.

B. Shop Drawings: Indicate deck plan, support locations, Projections, openings and reinforcement, pertinent details, method of welding deck to supporting members, and accessories.

C. Product Data: Submit deck profile characteristics and dimensions, structural properties, finishes, and special conditions.

D. Manufacturer’s Installation Instructions: Submit Manufacturer's installation instructions.

E. Manufacturer’s Certificates: Certify Products meet or exceed specified requirements.

F. Welders Certificates: Certify welders employed on the Work, verifying AWS qualification within previous 12 months.

1.5 QUALIFICATIONS

A. Installer: Company specializing in performing Work of this section with minimum three years documented experience.

B. Design deck layout, spans, fastening, joints, and under direct supervision of Professional Engineer experienced in design of this Work and licensed at Project location, in State of Texas.

1.6 DELIVERY, STORAGE, AND HANDLING

A. Section 01600 - Product Requirements: Product storage and handling requirements.

B. Cut plastic wrap to encourage ventilation.

C. Separate sheets and store deck on dry wood sleepers; slope for positive drainage.

PART 2 - PRODUCTS

2.1 MATERIALS

A. Manufacturers:
   1. United Steel Deck
   2. Vulcraft Steel Deck
   3. Wheeling Corrugating Co.
   4. Substitutions: Section 01600 - Product Requirements.

B. Sheet Steel: ASTM A653, Grade 33 Structural Quality; with G90 galvanized coating conforming to ASTM A525.

C. Bearing Plates and Angles: ASTM A36 steel, galvanized coating.

D. Welding Materials: AWS D1.1.

E. Touch-Up Primer for Galvanized Surfaces: SSPC 20 Type I - Inorganic.

2.2 ACCESSORIES

A. Flute Closures: Closed cell , 1 ½" inch thick; profiled to fit tight to deck.

B. Valley Strips, and Eave Strips: Fabricated of metal of same type and finish as deck.

2.3 FABRICATION

A. Metal Deck: Sheet steel, configured as follows:
1. Span Design: double
2. Minimum Metal Thickness Excluding Finish: 20 gage
3. Nominal Height: 1-1/2 inch, fluted profile to SDI WR
4. Formed Sheet Width: 32 or 36 inch
5. Side Joints: lapped
6. Flute Sides: plain vertical face.

B. Related Deck Accessories: Metal closure strips, cover plates, 20 gage thick galvanized sheet steel; of profile and size required.

C. Cant Strips: Formed sheet steel, 20 gage thick, 45 degree slope, 3 1/2 inch nominal width and height, flange for attachment.

D. Weld Washers: Mild steel, uncoated, 3/4 inch outside diameter, 1/8 inch thick.

PART 3 - EXECUTION

3.1 EXAMINATION

A. Section 01300 - Administrative Requirements: Coordination and project conditions.

3.2 INSTALLATION

A. Erect metal deck in accordance with SDI Manual.

B. Bear deck on masonry or concrete support surfaces with 4 inch minimum bearing. Align and level.

C. Bear deck on steel supports with 1-1/2 inch minimum bearing. Align and level. Deck sheets shall extend over four or more spans, where possible. End laps of sheets shall be a minimum of 2" and shall occur over supports.

D. Fasten deck to steel support members at ends and intermediate supports with fusion welds through weld washers at 12 inches oc maximum, parallel with deck flute and at each transverse flute.

E. Weld in accordance with AWS D1.1.

F. Mechanically fasten male/female side laps at 18 inches oc maximum.

G. Damaged or bent sections, or sections which do not properly mesh together at the side laps, shall not be used.

H. Seal deck joints, laps, ends, and penetrations with sealant to achieve permanent air seal consistent with air barrier system specified in Section 07900.

I. Reinforce steel deck openings from 6 to 18 inches in size with 2 x 2 x 1/4 inch steel angles. Place framing angles perpendicular to flutes; extend minimum two flutes beyond each side of opening and fusion weld to deck at each flute.

J. Install 6 inch minimum wide sheet steel cover plates, of same thickness as deck, where deck changes direction. Fusion weld 12 inches oc maximum.

K. Install sheet steel closures and angle flashings to close openings between deck and walls, columns, and openings.

L. Install double row of foam flute closures above walls and partitions perpendicular to deck flutes and also include metal closure strips at exterior wall.

M. Position roof sump pans with flange bearing on top surface of deck. Fusion weld at each deck flute.

N. Place metal cant strips in position and fusion weld.

O. Immediately after welding deck and other metal components in position, coat welds, burned areas, and damaged surface coating, with touch-up prime paint.

3.3 TOUCH-UP PAINTING

A. After decking installation, wire brush, clean and paint scarred areas, welds and rust spots on top and bottom surfaces of decking units and supporting steel members.

B. Touch-up galvanized surfaces with galvanizing repair paint applied in accordance with Manufacturer's instructions.

C. Touch-up painted surfaces with same type of shop paint used on adjacent surfaces.

3.4 ACCEPTANCE

Contractor shall notify the structural engineer when steel deck installation is complete to permit observation prior to placement of insulation or roofing substrate.

END OF SECTION

SECTION 05400
COLD-FORMED METAL FRAMING

PART 1 - GENERAL

1.1 SUMMARY

A. Section includes load bearing formed steel stud exterior wall and interior wall framing; and bridging.

B. Related Sections: Drawings and general provisions of the Contract, including General and Supplementary Conditions and Division 1 Specification Sections, apply to this Section.
1. Section 04820 – Reinforced Masonry Assemblies
2. Section 06114 - Wood Blocking and Curbing: Rough wood blocking
3. Section 07213 - Batt Insulation: Insulation within framing members
4. Section 07260 - Vapor Retarders
5. Section 09111 - Non-Load Bearing Metal Framing System
6. Section 09260 - Gypsum Board Assemblies: Light weight, non-load bearing metal stud framing.

1.2 REFERENCES

A. American Iron and Steel Institute:
1. AISI SG-973 - Cold-Formed Steel Design Manual.

B. ASTM International:
1. ASTM A123/A123M - Standard Specification for Zinc (Hot-Dip Galvanized) Coatings on Iron and Steel Products
2. ASTM A653/A653M - Standard Specification for Steel Sheet, Zinc-Coated (Galvanized) or Zinc-Iron Alloy-Coated (Galvannealed) by the Hot-Dip Process
3. ASTM A1008/A1008M - Standard Specification for Steel, Sheet, Cold-Rolled, Carbon, Structural, High-Strength Low-Alloy and High-Strength Low-Alloy with Improved Formability
4. ASTM A1011/A1011M - Standard Specification for Steel, Sheet and Strip, Hot-Rolled, Carbon, Structural, High-Strength Low-Alloy and High-Strength Low-Alloy with Improved Formability
5. ASTM C955 - Standard Specification for Load-Bearing (Transverse and Axial) Steel Studs, Runners (Tracks), and Bracing or Bridging for Screw Application of Gypsum Panel Products and Metal Plaster Bases.

C. American Welding Society:
1. AWS D1.1 - Structural Welding Code - Steel
2. AWS D1.3 - Structural Welding Code - Sheet Steel.

D. National Association of Architectural Metal Manufacturers:
1. NAAMM ML/SFA 540 - Lightweight Steel Framing Systems Manual.

E. SSPC: The Society for Protective Coatings:
   1. SSPC Paint 20 - Zinc-Rich Primers (Type I - Inorganic and Type II - Organic).

F. Steel Stud Manufacturers Association:
   1. SSMA - Product Technical Information.

1.3 SUBMITTALS

A. Section 01330 - Submittal Procedures: Submittal requirements.

B. Shop Drawings: Show layout, spacings, sizes, thicknesses, and types of cold-formed metal framing; fabrication; and fastening and anchorage details, including mechanical fasteners. Show reinforcing channels, opening framing, supplemental framing, strapping, bracing, bridging, splices, accessories, connection details, and attachment to adjoining work.

C. Product Data: Submit data on standard framing members; describe materials and finish, product criteria, and limitations.

D. Manufacturer's Installation Instructions: Submit special procedures, perimeter conditions and requiring special attention.

E. Mill Certifications: Submit mill certifications for steel delivered to site. Certify steel bare metal thickness in 0.001 inch, yield strength, tensile strength, total elongation in 2 inch or 8 inch gauge length, chemical analysis, and galvanized coating thickness.

F. Qualifications Data: For Installer of products.

1.4 QUALITY ASSURANCE

A. Calculate structural properties of framing members in accordance with AISI SG-973 Specification for Design of Cold-Formed Steel Structural Members.

B. Furnish framing materials in accordance with SSMA - Product Technical Information.

C. Maintain one copy copies on site.

D. Welding: Qualify procedures and personnel according to AWS D1.1/D1.1M, "Structural Welding Code--Steel," and AWS D1.3, "Structural Welding Code--Sheet Steel."

E. AISI Specifications and Standards: Comply with AISI's "North American Specification for the Design of Cold-Formed Steel Structural Members" and its "Standard for Cold-Formed Steel Framing - General Provisions."
   1. Comply with AISI's "Standard for Cold-Formed Steel Framing - Header Design."

F. Preinstallation Conference: Conduct conference at Project site to comply with requirements in Division 1 Section "Project Management and Coordination."

1.5 QUALIFICATIONS

A. Manufacturer: Company specializing in manufacturing products specified in this section with minimum three years documented experience.
   1. Current member of Steel Stud Manufacturers Association.

B. Installer: Company specializing in performing Work of this section with minimum three years documented experience.

C. Form, fabricate, provide, and connect components in accordance with NAAMM ML/SFA 540 - Lightweight Steel Framing Systems Manual.

1.6 MOCKUP

A. Section 01400 - Quality Requirements: Mockup requirements.

B. Construct exterior framed wall including corner condition mockup, including insulation, sheathing, door frame, and interior and exterior finish specified in other sections. Coordinate with installation of associated Work of Sections.

C. Locate where directed by Architect/Engineer.

D. Retain accepted mockup as completed Work.

1.7 COORDINATION

A. Section 01300 - Administrative Requirements: Coordination and project conditions.

B. Coordinate placement of components within stud framing system

1.8 DELIVERY, STORAGE, AND HANDLING

A. Protect cold-formed metal framing from corrosion, deformation, and other damage during delivery, storage, and handling.

B. Store cold-formed metal framing, protect with a waterproof covering, and ventilate to avoid condensation.

PART 2 - PRODUCTS

2.1 COLD-FORMED METAL FRAMING

A. Manufacturers:
   1. Clark Steel Framing Systems
   2. Dale / Incor
   3. Dietrich Metal Framing
   4. Steel Construction Systems
   5. Substitutions: Section 01600 - Product Requirements.

2.2 MATERIALS

A. Steel Sheet: ASTM A 1003/A 1003M, Structural Grade, Type H, metallic coated, of grade and coating weight as follows:
   1. Grade: ST50H
   2. Coating: G90.

B. Steel Sheet for Vertical Deflection Clips: ASTM A 653/A 653M, structural steel, zinc coated, of grade and coating as follows:
   1. Grade: 50, Class 1 or 2
   2. Coating: G90.

2.3 EXTERIOR NON-LOAD-BEARING WALL FRAMING

A. Steel Studs: Manufacturer's standard C-shaped steel studs, of web depths indicated, punched, with stiffened flanges, and as follows:
   1. Minimum Base-Metal Thickness: 0.0428 inch
   2. Flange Width: 1-5/8 inches.

B. Steel Track: Manufacturer's standard U-shaped steel track, of web depths indicated, unpunched, with unstiffened flanges, and as follows:
   1. Minimum Base-Metal Thickness: 0.0428 inch or greater than stud thickness where the track is to be installed
   2. Flange Width: 1-1/4 inches.

C. Vertical Deflection Clips: Manufacturer's standard head clips, capable of accommodating upward and downward vertical displacement of primary structure through positive mechanical attachment to stud web.
   1. Slip-Type slotted head track, Deflection Track: Steel sheet top runner manufactured to prevent cracking of finishes applied to interior partition framing resulting from deflection of structure above; in thickness not less than indicated for studs and in width to accommodate depth of studs.
      a. Standard leg 2 ½” with 1 ½” slot

2.4 FRAMING ACCESSORIES

A. Fabricate steel-framing accessories from steel sheet, ASTM A 1003/A 1003M, Structural Grade, Type H, metallic coated, of same grade and coating weight used for framing members.

B. Provide accessories of manufacturer's standard thickness and configuration, unless otherwise indicated, as follows:
   1. Supplementary framing
   2. Bracing, bridging, and solid blocking
   3. Anchor clips
   4. Stud kickers, knee braces, and girts
   5. Hole reinforcing plates
   6. Backer plates.

2.5 ANCHORS, CLIPS, AND FASTENERS

A. Steel Shapes and Clips: ASTM A 36/A 36M, zinc coated by hot-dip process according to ASTM A 123/A 123M.

B. Power-Actuated Anchors: Fastener system of type suitable for application indicated, fabricated from corrosion-resistant materials, with capability to sustain, without failure, a load equal to 10 times design load, as determined by testing per ASTM E 1190 conducted by a qualified independent testing agency.

C. Mechanical Fasteners: ASTM C 1513, corrosion-resistant-coated, self-drilling, self-tapping steel drill screws.
   1. Head Type: Low-profile head beneath sheathing, Manufacturer's standard elsewhere.

D. Welding Electrodes: Comply with AWS standards.

2.6 MISCELLANEOUS MATERIALS

A. Galvanizing Repair Paint: SSPC-Paint 20 or DOD-P-21035.

B. Shims: Load bearing, high-density multimonomer plastic, nonleaching.

C. Sealer Gaskets: Closed-cell neoprene foam, 1/4 inch thick, selected from Manufacturer's standard widths to match width of bottom track or rim track members.

2.7 FABRICATION

A. Fabricate cold-formed metal framing and accessories plumb, square, and true to line, and with connections securely fastened, according to referenced AISI's specifications and standards, Manufacturer's written instructions, and requirements in this Section.
   1. Fabricate framing assemblies using jigs or templates.
   2. Cut framing members by sawing or shearing; do not torch cut.
   3. Fasten cold-formed metal framing members by welding, screw fastening, clinch fastening, or riveting as standard with fabricator. Wire tying of framing members is not permitted.
      a. Comply with AWS D1.3 requirements and procedures for welding, appearance and quality of welds, and methods used in correcting welding work.
      b. Locate mechanical fasteners and install according to Shop Drawings, with screw penetrating joined members by not less than three exposed screw threads.
   4. Fasten other materials to cold-formed metal framing by welding, bolting, or screw fastening, according to Shop Drawings.

B. Reinforce, stiffen, and brace framing assemblies to withstand handling, delivery, and erection stresses. Lift fabricated assemblies to prevent damage or permanent distortion.

C. Fabrication Tolerances: Fabricate assemblies level, plumb, and true to line to a maximum allowable tolerance variation of 1/8 inch in 10 feet and as follows:
   1. Spacing: Space individual framing members no more than plus or minus 1/8 inch from plan location. Cumulative error shall not exceed minimum fastening requirements of sheathing or other finishing materials.
   2. Squareness: Fabricate each cold-formed metal framing assembly to a maximum out-of-square tolerance of 1/8 inch.

PART 3 - EXECUTION

3.1 EXAMINATION

A. Section 01300 - Administrative Requirements: Coordination and project conditions.

B. Verify building framing components are ready to receive Work.

C. Verify rough-in utilities are in proper location.

D. Examine supporting substrates and abutting structural framing for compliance with requirements for installation tolerances and other conditions affecting performance.
   1. Proceed with installation only after unsatisfactory conditions have been corrected.

3.2 INSTALLATION, GENERAL

A. Cold-formed metal framing may be shop or field fabricated for installation, or it may be field assembled.

B. Install cold-formed metal framing according to AISI's "Standard for Cold-Formed Steel Framing - General Provisions" and to Manufacturer's written instructions unless more stringent requirements are indicated.

C. Install shop- or field-fabricated, cold-formed framing and securely anchor to supporting structure.
   1. Screw, bolt, or weld wall panels at horizontal and vertical junctures to produce flush, even, true-to-line joints with maximum variation in plane and true position between fabricated panels not exceeding 1/16 inch.
   2. Provide a sill sealer or gasket barrier between all concrete and steel connections.

D. Install cold-formed metal framing and accessories plumb, square, and true to line, and with connections securely fastened.
   1. Cut framing members by sawing or shearing; do not torch cut.
   2. Fasten cold-formed metal framing members by welding, screw fastening, clinch fastening, or riveting. Wire tying of framing members is not permitted.
      a. Comply with AWS D1.3 requirements and procedures for welding, appearance and quality of welds, and methods used in correcting welding work.

b. Locate mechanical fasteners and install according to Shop Drawings, and complying with requirements for spacing, edge distances, and screw penetration.

E. Install framing members in one-piece lengths unless splice connections are indicated for track or tension members.

F. Construct corners using minimum three studs. Double stud wall openings, door jambs, and window jambs.

G. Install temporary bracing and supports to secure framing and support loads comparable in intensity to those for which structure was designed. Maintain braces and supports in place, undisturbed, until entire integrated supporting structure has been completed and permanent connections to framing are secured.

H. Do not bridge building control joints with cold-formed metal framing. Independently frame both sides of joints.

I. Install insulation, specified in Division 7 Section "Building Insulation," in built-up exterior framing members, such as headers, sills, boxed joists, and multiple studs at openings, that are inaccessible on completion of framing work.

J. Fasten hole reinforcing plate over web penetrations that exceed size of Manufacturer's standard punched openings.

3.3 EXTERIOR NON-LOAD-BEARING WALL INSTALLATION

A. Install continuous tracks sized to match studs. Align tracks accurately and securely anchor to supporting structure as indicated.

B. Fasten both flanges of studs to bottom track, unless otherwise indicated. Space studs as follows:
1. Stud Spacing: 16 inches unless noted otherwise.

C. Set studs plumb, except as needed for diagonal bracing or required for nonplumb walls or warped surfaces and similar requirements.

D. Isolate non-load-bearing steel framing from building structure to prevent transfer of vertical loads while providing lateral support.
1. Connect vertical deflection clips to infill studs and anchor to building structure.

E. Install horizontal bridging in wall studs, spaced in rows indicated on Shop Drawings but not more than 48 inches apart. Fasten at each stud intersection.
1. Bridging: Proprietary bridging bars installed according to Manufacturer's written instructions.

F. Install miscellaneous framing and connections, including stud kickers, web stiffeners, clip angles, continuous angles, anchors, fasteners, and stud girts, to provide a complete and stable wall-framing system.

3.4 ERECTION TOLERANCES

A. Section 01400 - Quality Requirements: Tolerances.

B. Erection Tolerances: Install cold-formed metal framing level, plumb, and true to line to a maximum allowable tolerance variation of 1/8 inch in 10 feet and as follows:

C. Space individual framing members no more than plus or minus 1/8 inch from plan location. Cumulative error shall not exceed minimum fastening requirements of sheathing or other finishing materials.

3.5 REPAIRS AND PROTECTION

A. Galvanizing Repairs: Prepare and repair damaged galvanized coatings on fabricated and installed cold-formed metal framing with galvanized repair paint according to ASTM A 780 and Manufacturer's written instructions.

B. Provide final protection and maintain conditions, in a manner acceptable to Manufacturer and Installer, that ensure that cold-formed metal framing is without damage or deterioration at time of Substantial Completion.

END OF SECTION

SECTION 05500
METAL FABRICATIONS

PART 1 - GENERAL

1.1 SUMMARY

A. Section includes shop fabricated metal items:
1. Loose steel Lintels
2. Steel framing and supports for overhead doors
3. Loose bearing and leveling plates
4. Ledge and shelf angles
5. Steel framing and supports for mechanical and electrical equipment
6. Channel door frames
7. Pipe Bollards
8. Metal floor plates and supports
9. Metal roof walkways
10. Steel weld plates and angles for casting into concrete not specified in other Sections
11. Steel framing and supports for applications where framing and supports are not specified in other Sections.

B. Related Sections:
1. Section 09900 - Paints and Coatings: Field applied paint finish
2. Section 03300 - Cast-In-Place Concrete: Execution requirements for embedded anchors and attachments for metal fabrications specified by this section
3. Section 04810 - Unit Masonry Assemblies: Execution requirements for embedded anchors and attachments for metal fabrications specified by this section in masonry.

1.2 REFERENCES

A. American Architectural Manufacturers Association:
1. AAMA 611 - Voluntary Specification for Anodized Architectural Aluminum.

B. ASTM International:
1. ASTM A36/A36M - Standard Specification for Carbon Structural Steel
2. ASTM A53/A53M - Standard Specification for Pipe, Steel, Black and Hot-Dipped, Zinc-Coated, Welded and Seamless
3. ASTM A123/A123M - Standard Specification for Zinc (Hot-Dip Galvanized) Coatings on Iron and Steel Products
4. ASTM A153/A153M - Standard Specification for Zinc Coating (Hot-Dip) on Iron and Steel Hardware
5. ASTM A283/283M - Standard Specification for Low and Intermediate Tensile Strength Carbon Steel Plates
6. ASTM A500 - Standard Specification for Cold-Formed Welded and Seamless Carbon Steel Structural Tubing in Rounds and Shapes

7. ASTM A501 - Standard Specification for Hot-Formed Welded and Seamless Carbon Steel Structural Tubing.

C. American Welding Society:
1. AWS A2.4 - Standard Symbols for Welding, Brazing, and Nondestructive Examination
2. AWS D1.1 - Structural Welding Code - Steel
3. AWS D1.6 - Structural Welding Code - Stainless Steel.

D. National Ornamental & Miscellaneous Metals Association:
1. NOMMA Guideline 1 - Joint Finishes.

E. SSPC: The Society for Protective Coatings:
1. SSPC - Steel Structures Painting Manual
2. SSPC SP 1 - Solvent Cleaning
3. SSPC Paint 15 - Steel Joist Shop Paint
4. SSPC Paint 20 - Zinc-Rich Primers (Type I - Inorganic and Type II - Organic).

1.3 SUBMITTALS

A. Section 01330 - Submittal Procedures: Submittal requirements.

B. Product Data: For the following:
1. Paint products
2. Grout.

C. Shop Drawings: Indicate profiles, sizes, connection attachments, reinforcing, anchorage, size and type of fasteners, and accessories.
1. Include erection drawings, elevations, and details where applicable. Show anchorage and accessory items. Indicate welded connections using standard AWS A2.0 welding symbols. Indicate net weld lengths.
2. Provide templates for anchors and bolts specified for installation under other Sections.

D. Welders Certificates: Certify welders employed on the Work, verifying AWS qualification within previous 12 months.

1.4 QUALITY ASSURANCE

A. Finish joints in accordance with NOMMA Guideline 1.

B. Perform Work in accordance with governing codes and regulations.

C. Maintain one copy copies of document on site.

1.5 QUALIFICATIONS

A. Installer: Company specializing in performing Work of this section with minimum three years documented experience.

B. Design under direct supervision of Professional Engineer experienced in design of this Work and licensed in State of Texas.

C. Welding: Qualify procedures and personnel according to the following:
1. AWS D1.1, "Structural Welding Code--Steel"
2. AWS D1.3, "Structural Welding Code--Sheet Steel."

1.6 DELIVERY, STORAGE, AND HANDLING

A. Section 01600 - Product Requirements: Product storage and handling requirements.

B. Accept metal fabrications on site in labeled shipments. Inspect for damage.

C. Protect metal fabrications from damage by exposure to weather.

1.7 FIELD MEASUREMENTS

A. Field Measurements: Verify actual locations of walls and other construction contiguous with metal fabrications by field measurements before fabrication and indicate measurements on Shop Drawings.
1. Established Dimensions: Where field measurements cannot be made without delaying the Work, establish dimensions and proceed with fabricating metal fabrications without field measurements. Coordinate wall and other contiguous construction to ensure that actual dimensions correspond to established dimensions.
2. Provide allowance for trimming and fitting at site.

1.8 COORDINATION

A. Coordinate installation of anchorages for metal fabrications. Furnish setting drawings, templates, and directions for installing anchorages, including sleeves, concrete inserts, anchor bolts, and items with integral anchors, that are to be embedded in concrete or masonry. Deliver such items to Project site in time for installation.

B. Coordinate installation of steel weld plates and angles for casting into concrete that are specified in this Section but required for work of another Section. Deliver such items to Project site in time for installation.

PART 2 - PRODUCTS

2.1 METALS, GENERAL

A. Metal Surfaces, General: Provide materials with smooth, flat surfaces, unless otherwise indicated. For metal fabrications exposed to view in the completed Work, provide materials without seam marks, roller marks, rolled trade names, or blemishes.

2.2 MATERIALS - STEEL

A. Ferrous Materials:
   1. Steel Sections: ASTM A36/A36M
   2. Steel Tubing: ASTM A500, Grade B or ASTM A501
   3. Plates: ASTM A283/A283M
   4. Pipe: ASTM A53/A53M, Grade B Schedule.

B. Fasteners: General.

C. Bolts, Nuts, and Washers: A307 galvanized to ASTM A153/A153M for galvanized components.

D. Welding Materials: AWS D1.1; type required for materials being welded.

E. Touch-Up Primer for Galvanized Surfaces: SSPC Paint 20 Type II Organic zinc rich.

2.3 MATERIALS - STAINLESS STEEL

A. Bars and Shapes: ASTM A276; Type 302, 304, or 316

B. Tubing: ASTM A554; Type 316

C. Pipe: ASTM A312/A312M

D. Plate, Sheet and Strip: ASTM A167; Type 316

E. Bolts, Nuts, and Washers: ASTM A354

F. Welding Materials: AWS D1.6; type required for materials being welded.

2.4 LINTELS

A. Fabricate loose steel lintels from steel angles and shapes of size indicated for openings and recesses in masonry walls and partitions at locations indicated. Weld adjoining members together to form a single unit where indicated.

B. Lintels: Steel sections, size and configuration as indicated on Drawings, length to allow 8 inches minimum bearing on both sides of opening.
   1. Exterior Locations: Galvanized
   2. Interior Locations: Prime paint, one coat.

2.5 LEDGE AND SHELF ANGLES

A. Ledge and Shelf Angles, Channels and Plates Not Attached to Structural Framing: For support of masonry; galvanized.

2.6 DOOR FRAMES

A. Door Frames: Steel channel sections, size indicated on Drawings, with jamb anchors suitable for attachment to steel framing, minimum 4 anchors per jamb; galvanized.

2.7 BOLLARDS

A. Bollards: Steel pipe, concrete filled, crowned cap, 6 inches diameter, length as indicated on Drawings; galvanized, prime paint, one coat.

B. Concrete Fill: 3,000 psi as specified in Section 03300.

C. Anchors: Concealed type.

2.8 STRUCTURAL SUPPORTS

A. Other Structural Supports: Steel sections, shape and size required to support applied loads with maximum deflection of 1/240 of the span; prime paint, one coat.

2.9 ANCHOR BOLTS

A. Anchor Bolts: ASTM A307; 3/4 inch steel bolt, standard J-hook, with nut and washer; unfinished.

B. Anchor Bolts: Metal building anchor bolts by Pre-Engineered Metal Building supplier.

2.10 UNISTRUT METAL ROOFWALK

A. Anti-Skid surfaced grating shall conform to Federal Specification RR-G-1602A.

B. The Grating shall be designed to withstand the following load criteria:
1. Uniform Live Load 500 psf
2. Concentrated Load 1000 lbs.

C. Contractor shall certify that grating has been tested, indicating maximum allowable uniform and concentrated loads, with a factor of safety of 2, per AISC, Section 6.

D. Provide products from the following Manufacturer or an approved equal: Unistrut Corporation (United Interlock Grating)

E. Grating shall be United Interlock Plank Grating System, as manufactured by Unistrut Corporation, 35660 Clinton Street, Wayne, Michigan 48184.

F. Materials shall conform to ASTM A653, Grade A with a Class G-90 coating.

G. Panels will be installed with a leg height of 2-1/2 inches.

H. The surface pattern shall provide a minimum of 35% but not more than 42% open area. Openings shall be a minimum of 4" long and a maximum of 3/4” width.

I. Grating shall be installed as detailed on the approved shop drawings.

J. Grating shall be installed in single, unspliced sections for all requirements to 20' lengths.

K. Grating shall interlock, with male-female legs providing a lock prohibiting horizontal movement. The outside leg of all members shall be male.

L. Connections of grating to support elements shall be by clamping with LM Curbs S-5 Utility clamps.

2.11 FABRICATION

A. Fit and shop assemble items in largest practical sections, for delivery to site.

B. Fabricate items with joints tightly fitted and secured.

C. Continuously seal joined members by continuous welds.

D. Grind exposed joints flush and smooth with adjacent finish surface. Make exposed joints butt tight, flush, and hairline. Ease exposed edges to small uniform radius.

E. Exposed Mechanical Fastenings: Flush countersunk screws or bolts; unobtrusively located; consistent with design of component, except where specifically noted otherwise.

F. Supply components required for anchorage of fabrications. Fabricate anchors and related components of same material and finish as fabrication, except where specifically noted otherwise.

2.12 FACTORY APPLIED FINISHES - STEEL

A. Clean surfaces of rust, scale, grease, and foreign matter prior to finishing.

B. Do not prime surfaces in direct contact with concrete or where field welding is required.

C. Prime paint items with two coats except where galvanizing is specified.

D. Galvanized Structural Steel Members: Galvanize after fabrication to ASTM A123. Furnish minimum 1.25 oz/sq ft galvanized coating.

E. Galvanized Non-structural Items: Galvanized after fabrication to ASTM A123. Furnish minimum 1.25 oz/sq ft galvanized coating.

2.13 FACTORY APPLIED FINISHES - STAINLESS STEEL

A. Satin Polished Finish: Number 4, satin directional polish parallel with long dimension of finished face.

2.14 FACTORY APPLIED FINISHES - ALUMINUM

A. Exterior Aluminum Surfaces: AAMA A41 anodized, prepared with pre-treatment, anodized to clear color.

B. Interior Aluminum Surfaces: AAMA A41 anodized, prepared with pre-treatment, anodized to clear color.

C. Apply one coat coats of bituminous paint to concealed aluminum surfaces in contact with cementitious or dissimilar materials.

2.15 FASTENERS

A. General: Unless otherwise indicated, provide Type 304 or 316 stainless-steel fasteners for exterior use and zinc-plated fasteners with coating complying with ASTM B 633, Class Fe/Zn 5, at exterior walls. Provide stainless-steel fasteners for fastening aluminum. Select fasteners for type, grade, and class required.

B. Steel Bolts and Nuts: Regular hexagon-head bolts, ASTM A 307, Grade A; with hex nuts, ASTM A 563; and, where indicated, flat washers.

C. Stainless-Steel Bolts and Nuts: Regular hexagon-head annealed stainless-steel bolts, nuts and, where indicated, flat washers; ASTM F 593 for bolts and ASTM F 594 for nuts, Alloy Group 1 for type 304 and for type 316.

D. Anchor Bolts: ASTM F 1554, Grade 36.
   1. Provide hot-dip or mechanically deposited, zinc-coated anchor bolts where item being fastened is indicated to be galvanized.

E. Eyebolts: ASTM A 489.

F. Machine Screws: ASME B18.6.3.

G. Lag Bolts: ASME B18.2.1.

H. Wood Screws: Flat head, ASME B18.6.1.

I. Plain Washers: Round, ASME B18.22.1.

J. Lock Washers: Helical, spring type, ASME B18.21.1.

K. Cast-in-Place Anchors in Concrete: Anchors capable of sustaining, without failure, a load equal to four times the load imposed, as determined by testing according to ASTM E 488, conducted by a qualified independent testing agency.
   1. Threaded or wedge type; galvanized ferrous castings, either ASTM A 47/A 47M malleable iron or ASTM A 27/A 27M cast steel. Provide bolts, washers, and shims as needed, hot-dip galvanized per ASTM A 153/A 153M.

L. Expansion Anchors: Anchor bolt and sleeve assembly with capability to sustain, without failure, a load equal to six times the load imposed when installed in unit masonry and four times the load imposed when installed in concrete, as determined by testing according to ASTM E 488, conducted by a qualified independent testing agency.
   1. Material for Anchors in Interior Locations: Carbon-steel components zinc-plated to comply with ASTM B 633, Class Fe/Zn 5.
   2. Material for Anchors in Exterior Locations: Alloy Group 1 for type 304 and for type 316 stainless-steel bolts complying with ASTM F 593 and nuts complying with ASTM F 594.

2.16 MISCELLANEOUS MATERIALS

A. Welding Rods and Bare Electrodes: Select according to AWS specifications for metal alloy welded.

B. Shop Primers: Provide primers that comply with Division 9 painting Sections.

C. Galvanizing Repair Paint: High-zinc-dust-content paint for regalvanizing welds in steel, complying with SSPC-Paint 20.

D. Bituminous Paint: Cold-applied asphalt emulsion complying with ASTM D 1187.

E. Nonshrink, Metallic Grout: Factory-packaged, ferrous-aggregate grout complying with ASTM C 1107, specifically recommended by Manufacturer for heavy-duty loading applications.

F. Nonshrink, Nonmetallic Grout: Factory-packaged, nonstaining, noncorrosive, nongaseous grout complying with ASTM C 1107. Provide grout specifically recommended by Manufacturer for interior and exterior applications.

G. Concrete Materials and Properties: Comply with requirements in Division 3 Section "Cast-in-Place Concrete" for normal-weight, air-entrained, ready-mix concrete with a minimum 28-day compressive strength of 3000 psi , unless otherwise indicated.

2.17 FABRICATION TOLERANCES

A. Squareness: 1/8 inch maximum difference in diagonal measurements.

B. Maximum Offset Between Faces: 1/16 inch.

C. Maximum Misalignment of Adjacent Members: 1/16 inch.

D. Maximum Bow: 1/8 inch in 48 inches.

E. Maximum Deviation From Plane: 1/16 inch in 48 inches.

PART 3 - EXECUTION

3.1 EXAMINATION

A. Section 01300 - Administrative Requirements: Coordination and project conditions.

B. Verify field conditions are acceptable and are ready to receive Work.

3.2 PREPARATION

A. Clean and strip primed steel items to bare metal and aluminum where site welding is required.

B. Supply steel items required to be cast into concrete or embedded in masonry with setting templates to appropriate sections.

3.3 INSTALLATION

A. Install items plumb and level, accurately fitted, free from distortion or defects.

B. Make provisions for erection stresses. Install temporary bracing to maintain alignment, until permanent bracing and attachments are installed.

C. Field weld components indicated on shop drawings.

D. Perform field welding in accordance with AWS D1.1.

E. Obtain approval of Architect/Engineer prior to site cutting or making adjustments not scheduled.

F. After erection, touch up welds, abrasions, and damaged finishes with prime paint or galvanizing repair paint to match shop finishes.

3.4 INSTALLATION, GENERAL

A. Cutting, Fitting, and Placement: Perform cutting, drilling, and fitting required for installing metal fabrications. Set metal fabrications accurately in location, alignment, and elevation; with edges and surfaces level, plumb, true, and free of rack; and measured from established lines and levels.

B. Fit exposed connections accurately together to form hairline joints. Weld connections that are not to be left as exposed joints but cannot be shop welded because of shipping size limitations. Do not weld, cut, or abrade surfaces of exterior units that have been hot-dip galvanized after fabrication and are for bolted or screwed field connections.

C. Field Welding: Comply with the following requirements:
   1. Use materials and methods that minimize distortion and develop strength and corrosion resistance of base metals.
   2. Obtain fusion without undercut or overlap.

3. Remove welding flux immediately.
4. At exposed connections, finish exposed welds and surfaces smooth and blended so no roughness shows after finishing and contour of welded surface matches that of adjacent surface.

D. Fastening to In-Place Construction: Provide anchorage devices and fasteners where metal fabrications are required to be fastened to in-place construction. Provide threaded fasteners for use with concrete and masonry inserts, toggle bolts, through bolts, lag bolts, wood screws, and other connectors.

E. Provide temporary bracing or anchors in formwork for items that are to be built into concrete, masonry, or similar construction.

3.5 INSTALLING MISCELLANEOUS FRAMING AND SUPPORTS

A. General: Install framing and supports to comply with requirements of items being supported, including Manufacturers' written instructions and requirements indicated on Shop Drawings.

3.6 INSTALLING BEARING AND LEVELING PLATES

A. Clean concrete and masonry bearing surfaces of bond-reducing materials, and roughen to improve bond to surfaces. Clean bottom surface of plates.

B. Set bearing and leveling plates on wedges, shims, or leveling nuts. After bearing members have been positioned and plumbed, tighten anchor bolts. Do not remove wedges or shims but, if protruding, cut off flush with edge of bearing plate before packing with grout.
1. Use nonshrink grout, either metallic or nonmetallic, in concealed locations where not exposed to moisture; use nonshrink, nonmetallic grout in exposed locations, unless otherwise indicated.
2. Pack grout solidly between bearing surfaces and plates to ensure that no voids remain.

3.7 INSTALLING METAL BOLLARDS

A. Anchor bollards in place with concrete footings. Center and align bollards in holes 3 inches above bottom of excavation. Place concrete and vibrate or tamp for consolidation. Support and brace bollards in position until concrete has cured.

B. Fill bollards solidly with concrete, mounding top surface to shed water.

3.8 ADJUSTING AND CLEANING

A. Touchup Painting: Immediately after erection, clean field welds, bolted connections, and abraded areas. Paint uncoated and abraded areas with the same material as used for shop painting to comply with SSPC-PA 1 for touching up shop-painted surfaces.
1. Apply by brush or spray to provide a minimum 2.0-mil dry film thickness.

B. Touchup Painting: Cleaning and touchup painting of field welds, bolted connections, and abraded areas of shop paint are specified in Division 9 painting Sections.

C. Galvanized Surfaces: Clean field welds, bolted connections, and abraded areas and repair galvanizing to comply with ASTM A 780.

3.9 ERECTION TOLERANCES

A. Section 01400 - Quality Requirements: Tolerances.

B. Maximum Variation From Plumb: 1/4 inch for every 12 ft in height, non-cumulative.

C. Maximum Offset From Alignment: 1/4 inch.

D. Maximum Out-of-Position: 1/4 inch.

END OF SECTION

SECTION 06114
WOOD BLOCKING AND CURBING

PART 1 - GENERAL

1.1 SUMMARY

A. Section includes blocking in wall openings; wood furring and grounds; telephone and electrical panel back boards; concealed wood blocking for support of toilet and bath accessories, wall cabinets, wood trim; and preservative treatment of wood.

B. Related Sections:
   1. Section 08520: Aluminum Window and Door openings to receive wood blocking
   2. Section 10800: Toilet Accessories

1.2 REFERENCES

A. American National Standards Institute:
   1. ANSI A208.1 - Mat-Formed Wood Particleboard.

B. American Wood-Preservers' Association:
   1. AWPA C1 - All Timber Products - Preservative Treatment by Pressure Process
   2. AWPA C20 - Structural Lumber - Fire-Retardant Treatment by Pressure Processes.

C. National Institute of Standards and Technology:
   1. NIST PS 20 - American Softwood Lumber Standard.

D. Southern Pine Inspection Bureau:
   1. SPIB - Standard Grading Rules for Southern Pine Lumber.

E. West Coast Lumber Inspection Bureau:
   1. WCLIB - Standard Grading Rules for West Coast Lumber.

1.3 SUBMITTALS

A. Section 01330 - Submittal Procedures: Submittal procedures.

B. Manufacturer's Certificate: Certify products meet or exceed specified requirements.

C. Indicate materials and wood species, component profiles, fastening, joining details, finishes and accessories.

D. Research/Evaluation reports: for the following, showing compliance with building code in effect for the Project Site:
   1. Preservative-treated wood
   2. Power-Driven fasteners
   3. Powder-Actuated fasteners

4. Expansion anchors.

E. Product Data: Submit technical data on wood preservative and fire retardant treatment materials and application instructions.
   1. Include data for wood-preservative treatment from chemical treatment Manufacturer and certification by treating plant that treated materials comply with requirements. Indicate type of preservative used and net amount of preservative retained.
   2. For products receiving a waterborne treatment, include statement that moisture content of treated materials was reduced to levels specified before shipment to Project Site.
   3. Include copies of warranties from chemical treatment Manufacturers for each type of treatment.

1.4 QUALITY ASSURANCE

A. Perform Work in accordance with the following:
   1. Lumber Grading Agency: Certified by NIST PS 20
   2. Plywood Grading Agency: Certified by APA/EWA.

B. Rough Carpentry Lumber: Douglas fir or yellow pine meeting the national grading rule for dimension lumber and the design values as determined in accordance with ASTM D245. All lumber shall bear a grade mark stamp of either the West Coast Lumber Inspection Bureau or Southern Pine Inspection Bureau.

1.5 DELIVERY, STORAGE, AND HANDLING

A. Section 01600 - Product Requirements: Product storage and handling requirements.

B. Stack lumber flat with spacers between each bundle to provide air circulation. Provide for air circulation around stacks and under coverings.

C. Do not deliver shop fabricated carpentry items until site conditions are adequate to receive the work. Protect items from weather while in transit.

D. Store indoors, in ventilated areas with a constant minimum temperature of 60 degrees F. maximum relative humidity of 25 to 55 percent.

E. Protect work from moisture damage.

PART 2 - PRODUCTS

2.1 MATERIALS

A. Lumber Grading Rules: SPIB.
   1. Factory mark each piece of lumber with grade stamp of grading agency.

B. Miscellaneous Framing: Stress Group, Southern Pine species, No. 1 grade, 15 percent maximum moisture content, pressure preservation treatment.

C. Miscellaneous Blocking: Stress Group, Southern Pine species, No. 2 grade, 15 percent maximum moisture content, pressure preservation treatment.

D. For blocking and nailers used for attachment of other construction, select and cut lumber to eliminate knots and other defects that will interfere with attachment of other work.

E. Plywood: APA/EWA Rated Sheathing Structural I, Grade B-C; Exposure Durability 1.

F. Plywood: APA/EWA Rated Sheathing Structural I, Grade C-D; Exposure Durability 1; unsanded.

2.2 ACCESSORIES

A. Fasteners and Anchors:
   1. Fasteners: Hot dipped galvanized steel for exterior, high humidity and treated wood locations, unfinished steel elsewhere: size and type to suit application.
   2. Anchors: Toggle bolt type for anchorage to hollow masonry. Expansion shield and lag bolt type for anchorage to solid masonry or concrete. Bolt or ballistic fastener for anchorages to steel.

B. Nails, Brads, and Staples: ASTM F 1667.

C. Power-Driven Fasteners: NES NER-272.

D. Wood Screws: ASME B18.6.1.

E. Screws for Fastening to Cold-Formed Metal Framing: ASTM C 954, except with wafer heads and reamer wings, length as recommended by screw Manufacturer for material being fastened.

F. Lag Bolts: ASME B18.2.1.

G. Bolts: Steel bolts complying with ASTM A 307, Grade A; with ASTM A 563 hex nuts and, where indicated, flat washers. Expansion Anchors: Anchor bolt and sleeve assembly of material indicated below with capability to sustain, without failure, a load equal to 6 times the load imposed when installed in unit masonry assemblies and equal to 4 times the load imposed when installed in concrete as determined by testing per ASTM E 488 conducted by a qualified independent testing and inspecting agency.
   1. Material: Stainless steel with bolts and nuts complying with ASTM F 593 and ASTM F 594, Alloy Group 1 or 2.

2.3 FACTORY WOOD TREATMENT

A. Wood Preservative (Pressure Treatment): AWPA C1 using water borne preservative ACQ (Alkaline Copper Quaternary compound) with 0.25 lbs. retention/cubic foot. Each

piece shall be Grade marked and shall show the retention, or the Contractor shall furnish a commercial laboratory inspection.

B. Fire Retardant Treatment: Pressure treatment, AWPA C20 for lumber and AWPA C27 for plywood, Interior Type, chemically treated and pressure impregnated; capable of providing a maximum flame spread/smoke development rating of 25/450. Each piece shall be Grade marked and shall show the retention, or the Contractor shall furnish a commercial laboratory inspection.

PART 3 - EXECUTION

3.1 EXAMINATION

A. Section 01300 - Administrative Requirements: Verification of existing conditions before starting work.

B. Verify substrate conditions are ready to receive blocking, curbing and framing.

3.2 PREPARATION

A. Coordinate placement of blocking, curbing and framing items.

3.3 INSTALLATION

A. Set members level and plumb, in correct position. Install where required for attaching other work, coordinate locations with other work involved.

B. Attach items to substrates to support applied loading. Recess bolts and nuts flush with surfaces, unless noted otherwise.

C. Place horizontal members, crown side up.

D. Construct members of continuous pieces of longest possible lengths.

E. Construct curb members of solid wood sections.

F. Curb roof openings except where prefabricated curbs are provided. Form corners by alternating lapping side members.

G. Space framing and furring 16 inches o.c. or as noted

H. Secure sheathing to framing members with ends over firm bearing and staggered.

I. Install telephone and electrical panel back boards with plywood sheathing material where required. Size back boards 12 inches beyond size of electrical and telephone panel.

3.4 SITE APPLIED WOOD TREATMENT

A. Apply preservative treatment.

B. Brush apply two coats of preservative treatment on wood in contact with cementitious materials, roofing and related metal flashings. Treat site-sawn cuts.

C. Allow preservative to dry prior to erecting members.

3.5 SCHEDULES

A. Blocking: S/P/F species, 15 percent maximum moisture content, pressure preservative treatment, Fire Retardant Treatment.

B. Telephone and Electrical Panel Boards: 3/4 inch thick, square edges, site brush applied preservative treated.

C. Toilet Rooms: S/P/F species, 15 percent maximum moisture content, pressure preservative treatment, Fire Retardant Treatment

END OF SECTION

SECTION 06200
FINISH CARPENTRY

PART 1 - GENERAL

1.1 SUMMARY

A. Section includes finish carpentry items; wood casings and moldings.

B. Related Sections:
1. Section 06114 - Wood Blocking and Curbing: Grounds and support framing
2. Section 06410 - Custom Cabinets: Shop fabricated custom cabinet work
3. Section 09900 - Paints and Coatings: Painting and finishing of finish carpentry items.

1.2 REFERENCES

A. American National Standards Institute:
1. ANSI A135.4 - Basic Hardboard
2. ANSI A156.9 - Cabinet Hardware
3. ANSI A208.1 - Mat-Formed Wood Particleboard.

B. APA-The Engineered Wood Association:
1. APA/EWA PS 1 - Voluntary Product Standard for Construction and Industrial Plywood.

C. Architectural Woodwork Institute:
1. AWI - Quality Standards Illustrated.

D. American Wood-Preservers' Association:
1. AWPA C1 - All Timber Products - Preservative Treatment by Pressure Process.

E. Hardwood Plywood and Veneer Association:
1. HPVA HP-1 - American National Standard for Hardwood and Decorative Plywood.

F. National Institute of Standards and Technology:
1. NIST PS 20 - American Softwood Lumber Standard.

1.3 SUBMITTALS

A. Section 01330 - Submittal Procedures: Submittal procedures.

B. Shop Drawings: Indicate materials, component profiles, fastening methods, jointing details, and accessories, to minimum scale of 1-1/2 inch to 1 ft.
1. Show locations and sizes of furring, blocking, and hanging strips, including concealed blocking and reinforcement specified in other Sections.

2. Show locations and sizes of cutouts and holes for plumbing fixtures, faucets, soap dispensers, and other items installed in architectural woodwork.

C. Product Data:
1. Submit data on fire retardant treatment materials and application instructions.
2. Product Certificates: For each type of product, signed by product Mnufacturer.
3. Woodwork Quality Standard Compliance Certificates: AWI Quality Certification Program certificates.
4. Qualification Data: For Installer.

D. Samples:
1. Submit two samples of finish plywood, 8 x 10 inch in size illustrating wood grain and specified finish.
2. Submit two samples of wood trim 10 inch long.

E. Certification: Submit copy of fabricator's authorization to use AWI Grade Stamps or AWI Quality Certification Program license and Project specific letters.

1.4 QUALITY ASSURANCE

A. Perform work in accordance with AWI (Architectural Woodwork Institute) Architectural Woodwork Quality Standards Illustrated, Custom Grade.

B. Maintain one copy of each document on site.

1.5 QUALIFICATIONS

A. Fabricator: Company specializing in fabricating Products specified in this section with minimum three years documented experience.

B. Installer Qualifications: Certified participant in AWI's Quality Certification Program.

C. Source Limitations: Engage a qualified woodworking firm to assume undivided responsibility for production of interior architectural woodwork.

D. Quality Standard: Unless otherwise indicated, comply with AWI's "Architectural Woodwork Quality Standards" for grades of interior architectural woodwork indicated for construction, finishes, installation, and other requirements.
1. Provide AWI Quality Certification Program labels and certificates indicating that woodwork complies with requirements of grades specified.

1.6 MOCKUP

A. Section 01400 - Quality Requirements: Mockup requirements.

B. Construct mockups, full size including window sill and door casing.

C. Locate where directed by Architect/Engineer.

D. Incorporate accepted mockup as part of Work if undisturbed at time of Substantial Completion.

1.7 PRE-INSTALLATION MEETINGS

A. Section 01300 - Administrative Requirements: Pre-installation meeting.

B. Convene minimum two weeks prior to commencing work of this section.

1.8 DELIVERY, STORAGE, AND HANDLING

A. Section 01600 - Product Requirements: Product storage and handling requirements.

B. Do not deliver woodwork until painting and similar operations that could damage woodwork have been completed in installation areas. If woodwork must be stored in other than installation areas, store only in areas where environmental conditions are controlled.

C. Environmental Limitations: Do not deliver or install woodwork until building is enclosed, wet work is complete, and HVAC system is operating and maintaining temperature and relative humidity at occupancy levels during the remainder of the construction period.

D. Protect work from moisture damage.

1.9 FIELD MEASUREMENTS

A. Verify field measurements prior to fabrication.

B. Field Measurements: Where woodwork is indicated to fit to other construction, verify dimensions of other construction by field measurements before fabrication, and indicate measurements on Shop Drawings. Coordinate fabrication schedule with construction progress to avoid delaying the Work.
   1. Locate concealed framing, blocking, and reinforcements that support woodwork by field measurements before being enclosed, and indicate measurements on Shop Drawings.
   2. Established Dimensions: Where field measurements cannot be made without delaying the Work, establish dimensions and proceed with fabricating woodwork without field measurements. Provide allowance for trimming at site, and coordinate construction to ensure that actual dimensions correspond to established dimensions

1.10 SEQUENCING

A. Sequence work to ensure utility connections are achieved in orderly and expeditious manner.

1.11 COORDINATION

A. Section 01300 - Administrative Requirements: Coordination and project conditions.

B. Coordinate sizes and locations of framing, blocking, furring, reinforcements, and other related units of Work specified in other Sections to ensure that interior architectural woodwork can be supported and installed as indicated.

PART 2 - PRODUCTS

2.1 FINISH CARPENTRY

A. General: Provide materials that comply with requirements of AWI's quality standard for each type of woodwork and quality grade specified, unless otherwise indicated

2.2 COMPONENTS

A. Hardwood Lumber: AWI Grade Custom Grade; maximum moisture content of 6-8 percent; and the following:
   1. Species of Wood: Red Oak
   2. Cut or Slicing of Wood: Plain or Flat Sawn

2.3 ACCESSORIES

A. Fasteners: Of size and type to suit application.

B. Concealed Joint Fasteners: Threaded steel.

C. Lumber for Shimming, Blocking, and Hanging strips: Softwood lumber: Stress Group, Southern Pine species, No. 2 grade, 15 percent maximum moisture content, pressure preservation treatment species.

D. Wood Filler: Solvent base, tinted to match surface finish color.

E. Wood Treatment:
   1. Fire Retardant (FR-S Type): Chemically treated and pressure impregnated; capable of providing maximum flame spread/smoke development rating of 25 / 450 in accordance with ASTM E84
   2. Shop pressure treat treatment to wood materials requiring fire rating preservatives to concealed wood blocking.
   3. Provide identification on fire retardant treated material.
   4. Deliver fire retardant treated materials cut to required sizes. Minimize field cutting.
   5. Redry or Kiln dry wood after pressure treatment to maximum 6-8 percent moisture content.

2.4 FABRICATION

A. Fabricate to AWI Custom standards.

B. Shop assemble work for delivery to site, permitting passage through building openings.

C. Shop prepare and identify components for grain matching during site erection.

D. Backout or groove backs of flat trim members and kerf backs of other wide, flat members, except for members with ends exposed in finished work.

E. Assemble casings in plant except where limitations of access to place of installation require field assembly

F. Assemble moldings in plant to maximum extent possible. Miter corners in plant and prepare for field assembly with bolted fittings designed to pull connections together.

G. When necessary to cut and fit on site, fabricate materials with ample allowance for cutting. Furnish trim for scribing and site cutting.

2.5 FINISHING

A. Sand work smooth and set exposed nails and screws.

B. Apply wood filler in exposed nail and screw indentations.

C. On items to receive transparent finishes, use wood filler matching surrounding surfaces and of types recommended for applied finishes.

D. Stain, seal, and varnish exposed to view surfaces, per specifications section 09900, Paintings and Coatings. All finished natural woods to match.

E. Seal internal surfaces and semi-concealed surfaces.

F. Seal surfaces in contact with cementitious materials.

PART 3 - EXECUTION

3.1 EXAMINATION

A. Section 01300 - Administrative Requirements: Coordination and project conditions.

B. Verify adequacy of backing and support framing.

C. Verify mechanical, electrical, and building items affecting work of this section are placed and ready to receive this work.

D. Before installation, condition woodwork to average prevailing humidity conditions in installation areas.

E. Before installing architectural woodwork, examine shop-fabricated work for completion and complete work as required, including removal of packing and backpriming.

3.2 INSTALLATION

A. Install work in accordance with AWI Custom quality standard.

B. Set and secure materials and components in place, plumb and level.

C. Carefully scribe work abutting other components, with maximum gaps of 1/32 inch. Do not use additional overlay trim to conceal larger gaps.

D. Site Applied Wood Treatment:
1. Apply preservative treatment.
2. Brush apply two coats of preservative treatment on wood in contact with cementitious materials.
3. Treat site-sawn cuts.
4. Allow preservative to dry prior to erecting members.

E. Preparation For Site Finishing:
1. Set exposed fasteners. Apply wood filler in exposed fastener indentations. Sand work smooth.
2. Site Finishing: Refer to Section 09900, Paints and Coatings
3. Before installation, prime paint surfaces of items or assemblies to be in contact with cementitious materials.

F. Anchor woodwork to anchors or blocking built in or directly attached to substrates. Secure with countersunk, concealed fasteners and blind nailing as required for complete installation. Use fine finishing nails or finishing screws for exposed fastening, countersunk and filled flush with woodwork and matching final finish if transparent finish is indicated.

G. Standing and Running Trim: Install with minimum number of joints possible, using full-length pieces (from maximum length of lumber available) to greatest extent possible. Do not use pieces less than 96 inches long, except where shorter single-length pieces are necessary. Scarf running joints and stagger in adjacent and related members.
1. Fill gaps, if any, between top of base and wall with plastic wood filler, sand smooth, and finish same as wood base if finished.
2. Install standing and running trim with no more variation from a straight line than 1/8 inch in 96 inches.

3.3 ERECTION TOLERANCES

A. Section 01400 - Quality Requirements: Tolerances.

B. Maximum Variation from Indicated Position: 1/16 inch.

C. Maximum Offset from Alignment with Abutting Materials: 1/32 inch.

D. Repair damaged and defective woodwork, where possible, to eliminate functional and visual defects; where not possible to repair, replace woodwork. Adjust joinery for uniform appearance.

3.4 SCHEDULES

A. Interior:
   1. Window Sills: Clear Red Oak; prepare for transparent finish.
   2. Casings and Miscellaneous Trim: Clear Red Oak; prepare for transparent finish.

END OF SECTION

SECTION 06410
CUSTOM CABINETS

PART 1 - GENERAL

1.1 SUMMARY

A. Section includes custom-fabricated cabinet units; counter tops; cabinet hardware; preparation for installing utilities in cabinets; and shop and / or site finishing.

B. Contractor has option of furnishing and installing Red Oak woodwork or plastic laminate surfacing cabinets.

C. Related Sections:
1. Section 06114 - Wood Blocking and Curbing: Grounds and support framing
2. Section 09900 - Paints and Coatings: Site finishing of cabinets and woodwork.

1.2 REFERENCES

A. American National Standards Institute:
1. ANSI A156.9 - Cabinet Hardware
2. ANSI A208.1 - Mat-Formed Wood Particleboard.

B. Architectural Woodwork Institute:
1. AWI - Quality Standards Illustrated.

C. Federal Specification Unit:
1. FS A-A-1936 - Adhesive, Contact, Neoprene Rubber.

D. National Electrical Manufacturers Association:
1. NEMA LD 3 - High Pressure Decorative Laminates.

E. Woodwork Institute of California:
1. WIC - Manual of Millwork.

1.3 SUBMITTALS

A. Section 01330 - Submittal Procedures: Submittal procedures.

B. Product Data: For panel products, high-pressure decorative laminate, adhesive for bonding plastic laminate, cabinet hardware and accessories. Min. 2” x 2” Red Oak wood sample.

C. Shop Drawings: Indicate materials, component profiles and elevations, assembly methods, joint details, fastening methods, accessory listings, hardware location and schedule of finishes.
1. Show details full size.

2. Show locations and sizes of furring, blocking, and hanging strips, including concealed blocking and reinforcement specified in other Sections.
3. Show locations and sizes of cutouts and holes for plumbing fixtures, faucets, soap dispensers, and other items installed in architectural woodwork.

D. Product Data: Submit data for hardware accessories.

E. Samples for Initial Selection:
1. Plastic laminates.
2. Red Oak .

F. Certification: Submit copy of fabricator’s authorization to use AWI Grade Stamps. AWI Quality Certification Program license and Project specific letters.

G. Product Certificates: For each type of product, signed by product Manufacturer.

H. Qualification Data: For Installer.

1.4 QUALITY ASSURANCE

A. Perform work in accordance with AWI (Architectural Woodwork Institute) Architectural Woodwork Quality Standards Illustrated, Custom Grade.

B. Source Limitations: Engage a qualified woodworking firm to assume undivided responsibility for production of interior architectural woodwork.

C. Installer Qualifications: Certified participant in AWI's Quality Certification Program.

D. Quality Standard: Unless otherwise indicated, comply with AWI's "Architectural Woodwork Quality Standards" for grades of interior architectural woodwork indicated for construction, finishes, installation, and other requirements.
1. Provide AWI Quality Certification Program labels and certificates indicating that woodwork complies with requirements of grades specified.

E. Maintain one copy of each document on site.

1.5 QUALIFICATIONS

A. Fabricator: Company specializing in performing Work of this section with minimum three years documented experience.

B. Fabricator: Authorized to use AWI Grade Stamps

1.6 MOCKUP

A. Section 01400 - Quality Requirements: Mockup requirements.

B. Construct mockup of full size base cabinet and hardware.

C. Locate where directed by Architect.

D. Incorporate accepted mockup as part of Work.

1.7 PRE-INSTALLATION MEETINGS

A. Section 01300 - Administrative Requirements: Pre-installation meeting.

B. Convene minimum two weeks prior to commencing work of this section.

1.8 DELIVERY, STORAGE, AND HANDLING

A. Section 01600 - Product Requirements: Product storage and handling requirements.

B. Protect units from moisture damage.

1.9 ENVIRONMENTAL REQUIREMENTS

A. Section 01600 - Product Requirements.

B. During and after installation of Work of this section, maintain same temperature and humidity conditions in building spaces as will occur after occupancy.

1.10 FIELD MEASUREMENTS

A. Verify field measurements prior to fabrication.

PART 2 - PRODUCTS

2.1 CUSTOM CABINETS

A. Fabricators:
   1. Fieldstone Cabinetry, Inc. Model Hudson, Brighton or Farmington.
   2. Legacy Cabinets, Inc. Model The Select Series, Plantation Natural Square
   3. Substitutions: Section 01600 - Product Requirements.

2.2 COMPONENTS

A. Hardwood Lumber: AWI Grade Custom; maximum moisture content of 6-8 percent; and the following:
   1. Species of Wood: Red Oak
   2. Cut or Slicing of Wood: Plain, Flat Sawn or Quarter Sawn
   3. Matching of Individual Leaves to Each Other: slip matching.

B. Hardwood Plywood: AWI Grade A veneer with medium density fiberboard core; low VOC type of glue recommended for application; formaldehyde-free binders and the following:
   1. Species of Veneer: Red Oak

2. Cut or Slicing of Veneer: Plain, Flat Sawn or Quarter Sawn
3. Matching of Individual Leaves to Each Other: slip random matching
4. Matching Across the Panel Face: balanced matching
5. Matching or Relationship of Panels to Each Other: premanufactured sets.

C. Particleboard: ANSI A208.1 Type 1; ¾" thick composed of 100% pre-consumer recycled wood fiber particleboard with **no Urea Formaldehyde** added during the manufacturing process (LEED). Medium density, made with water resistant adhesive; sanded faces. End panels, Bottoms, Rails, Shelves, Doors and Bases; formaldehyde-free binders

D. Drawer Sides and Backs: Solid-hardwood lumber.

E. Drawer Bottoms: Hardwood plywood.

F. Hardboard with Melamine backer. 7/32" Backs.

G. High Pressure Decorative Laminate: NEMA LD 3, GP50 for horizontal surfaces, GP28 for vertical surfaces, CL20 for cabinet liner surfaces, BK20 for undecorated backing sheets, FR50 for fire-retardant surfaces; through color, pattern, and surface texture as selected by Architect from full range Manufacturers standards.
1. Manufacturer: Subject to compliance with requirements, provide high-pressure decorative laminates by one of the following or approved equivalent:
   a. Nevamar Company, LLC; Decorative Products Div.
   b. Formica Co.
   c. Wilsonart International; Div. of Premark International, Inc.

2.3 ACCESSORIES

A. Adhesive for High Pressure Decorative Laminates: Type recommended by laminate Manufacturer to suit application, formaldehyde free adhesive, low voc.

B. Veneer Edge Band: Standard wood veneer edge band matching face veneer. Conceal edge grain of exposed and semi-exposed plywood and particle board with hardwood edge bands.

C. Fasteners: Size and type to suit application.

D. Bolts, Nuts, Washers, Lags, Pins, and Screws: Of size and type to suit application; brass finish in concealed locations and brass finish in exposed locations.

E. Concealed Joint Fasteners: Threaded steel.

F. Shelf Standards and Rests: Formed steel channels and rests, cut for fitted rests spaced at ½ inch centers; satin finish.

G. Drawer and Door Pulls: Extruded aluminum pull, "U" shaped pull, aluminum with satin finish, 4 inch centers. Stanley Hardware #348311, Satin Aluminum.

H. Catches: Adjustable Magnetic. Stanley Hardware #810160 Clear coated aluminum.

I. Drawer Slides: Galvanized steel construction, ball bearings separating tracks, full extension type. Blum Standard drawer runner 430E full extension.

J. Hinges: Concealed hinges type, steel with satin finish. 3-dimensional door adjustment. Blum Modul hinge, screw on.

2.4 FABRICATION

A. Shop assemble casework for delivery to site in units easily handled and to permit passage through building openings.

B. Fit shelves, doors, and exposed edges with matching veneer edging. Use one piece for full length only.

C. Cap exposed high pressure decorative laminate finish edges with material of same finish and pattern.

D. Door and Drawer Fronts: 3/4 inch thick; partial overlay style.

E. When necessary to cut and fit on site, fabricate materials with ample allowance for cutting. Furnish trim for scribing and site cutting.

F. Apply high pressure decorative laminate finish in full uninterrupted sheets consistent with manufactured sizes. Fit corners and joints hairline; secure with concealed fasteners. Locate counter butt joints minimum 2 feet from sink cut-outs.

G. Apply laminate backing sheet to reverse side of plastic laminate finished surfaces.

H. Fabricate cabinets and counter tops with cutouts for plumbing fixtures, inserts, outlet boxes, fixtures and fittings. Verify cutouts from on-site dimensions. Seal cut edges.

2.5 SHOP FINISHING

A. Sand work smooth and set exposed nails and screws.

B. Apply wood filler in exposed nail and screw indentations.

C. On items to receive transparent finishes, use wood filler matching surrounding surfaces and of types recommended for applied finishes.

D. Finish work in accordance with AWI - Section 1500 Finish System Transparent TR-6 or TR-7.

E. Stain, seal and varnish exposed to view surfaces.

F. Seal, stain, and varnish internal surfaces of cabinets and semi-concealed surfaces.

G. Finish in accordance with Section 09900.

PART 3 - EXECUTION

3.1 EXAMINATION

A. Section 01300 - Administrative Requirements: Coordination and project conditions.

B. Verify adequacy of backing and support framing.

C. Verify location and sizes of utility rough-in associated with work of this section.

3.2 INSTALLATION

A. Set and secure casework in place; rigid, plumb, and level.

B. Use fixture attachments in concealed locations for wall mounted components.

C. Use concealed joint fasteners to align and secure adjoining cabinet units and counter tops.

D. Carefully scribe casework abutting other components, with maximum gaps of 1/32 inch. Do not use additional overlay trim for this purpose.

E. Secure cabinet and counter bases to floor using appropriate angles and anchorages.

F. Countersink anchorage devices at exposed locations. Conceal with solid wood plugs of species to match surrounding wood; finish flush with surrounding surfaces.

3.3 ADJUSTING

A. Section 01700 - Execution Requirements: Testing, adjusting and balancing.

B. Adjust moving or operating parts to function smoothly and correctly.

3.4 CLEANING

A. Section 01700 - Execution Requirements: Final cleaning.

B. Clean casework, counters, shelves, hardware, fittings, and fixtures.

3.5 SCHEDULES

A. Meeting Room: Base and upper units wood or high pressure decorative laminate, high pressure decorative laminate counter top, exposed wood finish AWI TR-6 or TR-7.

B. Corridor: Base and upper units wood or high pressure decorative laminate, high pressure decorative laminate counter top, exposed wood finish AWI TR-6 or TR-7.

C. Toilet Rooms: High pressure decorative laminate counter top

END OF SECTION

SECTION 07190
WATER REPELLENTS

PART 1 - GENERAL

1.1 SUMMARY

A. Section includes water repellent coating applied to exterior and interior clay brick, concrete masonry, and concrete surfaces.

B. Related Sections:
1. Section 03300-Cast-In-Place Concrete: Concrete surfaces
2. Section 07900 - Joint Sealers.

1.2 REFERENCES

A. ASTM International:
1. ASTM D1653 - Standard Test Method for Water Vapor Transmission of Organic Coating Films
2. ASTM G154 - Standard Practice for Operating Fluorescent Light Apparatus for UV Exposure of Nonmetallic Materials.

1.3 SYSTEM DESCRIPTION

A. Applied Penetrant: Material to restrict moisture absorption in material being treated as recommended by Manufacturer for specific substrate.

B. Performance Requirements:
1. Reduce absorption of water and waterborne contaminants into substrate.
2. Permit water vapor transmittance.
3. No change to slight darkening of substrate after application.

1.4 SUBMITTALS

A. Section 01330 - Submittal Procedures: Submittal procedures.

B. Product Data: Submit details of product description, tests performed, limitations to coating, and chemical properties including percentage of solids.

C. Manufacturer's Installation Instructions: Submit special procedures and conditions requiring special attention, and cautionary procedures required during application.

D. Manufacturer's Certificate: Certify products meet or exceed specified requirements.

1.5 QUALIFICATIONS

A. Manufacturer: Company specializing in manufacturing products specified in this section with minimum three years documented experience.

B. Applicator: Company specializing in performing Work of this section with minimum three years documented experience.

1.6 PRE-INSTALLATION MEETINGS

A. Section 01300 - Administrative Requirements: Pre-installation meeting.

B. Convene minimum two weeks prior to commencing work of this section.

1.7 DELIVERY, STORAGE, AND HANDLING

A. Section 01600 - Product Requirements: Product storage and handling requirements.

B. Protect coating liquid from freezing.

1.8 ENVIRONMENTAL REQUIREMENTS

A. Section 01600 - Product Requirements.

B. Do not apply coating when wind velocity exceeds manufacturer recommendations.

C. Environmental Requirements:
1. Ambient and surface temperatures between 50 and 100 degrees F (4 and 38 degrees C).
2. Do not apply if rain or temperatures below 50 degrees F (4 degrees C) are expected within 6 hours after application.
3. Do not apply during winds that could carry water repellent to adjacent surfaces, properties, or vegetation.
4. Do not apply sooner than 24 hours after surface has been exposed to rain or other water source.

D. Substrate:
1. Cured minimum 30 days
2. Not frozen or frost covered
3. Clean, sound, and dry.

E. Ensure adequate ventilation in application areas.

F. Joint sealers, paints, and glazing compounds and sealants fully cured.

1.9 WARRANTY

A. Section 01700 - Execution Requirements: Product warranties and product bonds.

B. Furnish five year Manufacturer warranty for water repellents.

PART 2 - PRODUCTS

2.1 WATER REPELLENTS

A. Manufacturers:
1. Euclid Chemical Company
2. Pecora Corporation
3. ProSoCo
4. Sonneborn Building Products
5. Substitutions: Section 01600 - Product Requirements.

2.2 COMPONENTS

A. Siloxane Water Repellent: Siloxane penetrating type water repellent, with maximum 175 g/L VOC content.
1. Moisture Vapor Transmission: Maximum 28.33 perms or 50% compared to untreated surfaces, ASTM D1653.
2. Resistance to Accelerated Weathering: No loss in repellency after 2,500 hours, ASTM G154.
3. Reduction of Leakage: Minimum 97 percent water penetration and leakage, ASTM E514.
4. Apply to clay brick, concrete masonry, concrete, and stucco.

B. Silane Water Repellent: Silane penetrating type water repellent, with maximum 175 g/L VOC content.
1. Moisture Vapor Transmission: Maximum 28.33 perms or 50% compared to untreated surfaces, ASTM D1653.
2. Resistance to Accelerated Weathering: No loss in repellency after 2,500 hours, ASTM G154.
3. Reduction of Leakage: Minimum 97 percent water penetration and leakage, ASTM E514.
4. Apply to clay brick, concrete masonry, concrete, and stucco.

PART 3 - EXECUTION

3.1 EXAMINATION

A. Section 01300 - Administrative Requirements: Coordination and project conditions.

B. Verify surfaces to be coated are dry, clean, and free of efflorescence, oil, or other matter detrimental to application of coating.

3.2 PREPARATION

A. Delay Work until concrete substrate is cured minimum of 60 days.

B. Remove loose particles and foreign matter.

C. Remove oil or foreign substance with chemical solvent which will not effect coating.

D. Scrub and rinse surfaces with water and let dry.

3.3 APPLICATION

A. Apply at rate of per Manufacturers coverage rates and by recommend application equipment.

B. Apply in two continuous, uniform coats.

3.4 PROTECTION OF INSTALLED CONSTRUCTION

A. Section 01700 - Execution Requirements: Protecting installed construction.

B. Protect adjacent surfaces not scheduled to receive coating.

C. Protect landscaping, property and vehicles.

D. When applied to unscheduled surfaces, remove immediately by methods as instructed by coating Manufacturer.

3.5 SCHEDULES

A. Concrete floors: Two coat application, clear.

END OF SECTION

SECTION 07212
ROOF BOARD INSULATION

PART 1 - GENERAL

1.1 SUMMARY

A. Section includes rigid board insulation and integral vapor retarder at roof.

B. Related Sections:
1. Section 07260 - Vapor Retarders: Vapor retarder materials to adjacent insulation
2. Section 07213 - Batt Insulation
3. Section 13120 – Pre-Engineered Buildings

1.2 REFERENCES

A. ASTM International:
1. ASTM C578 - Standard Specification for Rigid, Cellular Polystyrene Thermal Insulation
2. ASTM C1289 - Standard Specification for Faced Rigid Cellular Thermal Insulation Board
3. ASTM D2842 - Standard Test Method for Water Absorption of Rigid Cellular Plastics
4. ASTM E84 - Standard Test Method for Surface Burning Characteristics of Building Materials
5. ASTM E96 - Standard Test Methods for Water Vapor Transmission of Materials.

B. National Fire Protection Association:
1. NFPA 255 - Standard Method of Test of Surface Burning Characteristics of Building Materials.

C. Underwriters Laboratories Inc.:
1. UL 723 - Tests for Surface Burning Characteristics of Building Materials.

1.3 SYSTEM DESCRIPTION

A. Materials of This Section: Provide thermal protection to vapor retarder in conjunction with vapor retarder materials in Section 07260.

1.4 SUBMITTALS

A. Section 01330 - Submittal Procedures: Submittal procedures.

B. Product Data: Submit data on product characteristics, performance criteria, limitations, and adhesives.

C. Manufacturer's Installation Instructions: Submit special environmental conditions required for installation and installation techniques.

D. Manufacturer's Certificate: Certify products meet or exceed specified requirements.

1.5 ENVIRONMENTAL REQUIREMENTS

A. Section 01600 - Product Requirements.

B. Do not install adhesives when temperature or weather conditions are detrimental to successful installation.

1.6 SEQUENCING

A. Section 01100 - Summary: Work sequence.

B. Sequence Work to ensure firestopping and vapor retarder materials are in place before beginning Work of this section.

1.7 COORDINATION

A. Section 01300 - Administrative Requirements: Coordination and project conditions.

B. Coordinate Work with Section 05500 and Section 13120 for installation of vapor barrier.

PART 2 - PRODUCTS

2.1 BOARD INSULATION

A. Manufacturers:
1. Celotex - Polyisocyanurate Insulation Model THERMAX Metal Building Board
2. Rmax - Polyisocyanurate Insulation Model THERMAROOF Plus - 3
3. Substitutions: Section 01600 - Product Requirements.

2.2 COMPONENTS

A. Polyisocyanurate Insulation: ASTM C1289 Rigid Board, glass fiber reinforced, Type I, Class 1 or 2. Conforming to the following:
1. Board Density: 2.0 lb/cu ft
2. Board Size: 4’ x 8’ inch
3. Board Thickness: 2.0 inches base course (R=12.8), 1.5 inches top course (R=9.6). Total 3.5 inches of insulation, stagger joints between base and top courses.
4. Facing: Factory applied skin of aluminum foil on both faces
5. Total Thermal Resistance: Aged R of 22.4
6. Water Absorption: In accordance with ASTM C209 < 1% percent by volume maximum
7. Water Vapor Transmission: In accordance with ASTM E 96 < 1 perm
8. Compressive Strength: Minimum 20 psi
9. Board Edges: Square edges
10. Flame/Smoke Properties: 25 / <250 in accordance with ASTM E84 labeled by agency acceptable to authorities having jurisdictions.

2.3 ACCESSORIES

A. Adhesive: Type recommended by insulation Manufacturer for application.

B. Adhesive: Type recommended by insulation fastener Manufacturer for application.

C. Adhesive: Gun grade, mastic type, compatible with insulation and substrate; Type recommended by insulation Manufacturer for application.

D. Sheet Vapor Retarder: Provide vapor barriers with the following properties based on testing manufacture's standard products, according to test methods indicated, applied to substrates simulating Project conditions using same materials and application methods to be used for Project
   1. ALUMISEAL CORPORATION:
      a. Sheet vapor barrier: Zero Perm Vapor Barrier
      b. Vapor barrier tape: Zero Perm Pressure Sensitive Tape
   2. Water-vapor transmission (flat condition): 0.000 grams/hr/sq meter, per ASTM E-96 Procedure B
   3. Water-vapor transmission (flex test): 0.0134 grams/100 sq in, per petri dish method, Standard test #2
   4. Tensile strength: 25,000 lbs/sq in per ASTM D882-64T
   5. Bursting strength: 96.6 lbs/sq in, per ASTM D 77463T
   6. Tear strength: 1,800 lbs/sq in, per ASTM D 1004-66
   7. Melting point: 480 degrees F, per Fisher-Johns test
   8. Fire hazard classification:
      a. Flame spread: 5 per ASTM E-84 and NFDA 255
      b. Fuel contributed: 0 per ASTM E-84 and NFDA 255
      c. Smoke developed: 5 per ASTM E-84 and NFDA 255

E. Tape: Bright aluminum self-adhering type, mesh reinforced, 2 inch wide.

F. Insulation Fasteners: Impaling clip of plastic with washer retainer and clips, to be adhered to surface to receive board insulation, length to suit insulation thickness and substrate, capable of securely and rigidly fastening insulation in place until installation of metal roof panel.

PART 3 - EXECUTION

3.1 EXAMINATION

A. Section 01300 - Administrative Requirements: Coordination and project conditions.

B. Verify substrate, adjacent materials, and insulation boards are dry and ready to receive insulation .

C. Verify substrate surface is flat, free of materials or substances affecting adhesive bond.

3.2 INSTALLATION - ROOF

A. Install boards on roof.
   1. Attach to the roof deck with Manufacturer approved fasteners.
   2. Place boards in method to maximize contact bedding.
   3. Stagger side and end joints, stagger joints from top and bottom layers.
   4. Butt edges and ends tight to adjacent board and to protrusions.
   5. Tape seal in place to ensure continuity of vapor retarder.
   6. Install material in accordance with Manufacturer's instructions and per reviewed submittals.
   7. Coordinate with work of other Sections.
   8. Boards must be kept completely dry before and throughout construction.

B. Cut and fit insulation tight to protrusions or interruptions to insulation plane.

C. Install Sheet Vapor Barrier.
   1. Tape seal in place to ensure continuity of vapor retarder.
   2. Install material in accordance with Manufacturer's instructions and per reviewed submittals.
   3. Coordinate with work of other Sections.

3.3 PROTECTION OF INSTALLED CONSTRUCTION

A. Section 01700 - Execution Requirements: Protecting installed construction.

B. Do not permit damage to insulation prior to covering.

END OF SECTION

SECTION 07213
BATT INSULATION

PART 1 - GENERAL

1.1 SUMMARY

A. Section includes batt insulation in exterior wall construction; Sound attenuation insulation; and batt insulation for filling perimeter window and door shim spaces, and crevices in exterior wall and roof.

B. Related Sections:
1. Section 07270 – Roof Vapor Barriers: Vapor retarder materials adjacent to insulation
2. Section 07212 - Board Insulation
3. Section 07840 - Firestopping
4. Section 09260 - Gypsum Board Assemblies: Acoustic insulation.

1.2 REFERENCES

A. ASTM International:
1. ASTM C665 - Standard Specification for Mineral-Fiber Blanket Thermal Insulation for Light Frame Construction and Manufactured Housing
2. ASTM E84 - Standard Test Method for Surface Burning Characteristics of Building Materials.

B. National Fire Protection Association:
1. NFPA 255 - Standard Method of Test of Surface Burning Characteristics of Building Materials.

C. Underwriters Laboratories Inc.:
1. UL 723 - Tests for Surface Burning Characteristics of Building Materials.

1.3 SYSTEM DESCRIPTION

A. Materials of This Section: Provide thermal protection to vapor retarder in conjunction with vapor retarder materials in Section 07260.

1.4 SUBMITTALS

A. Section 01330 - Submittal Procedures: Submittal procedures.

B. Product Data: Submit data on product characteristics, performance criteria, and limitations.

C. Manufacturer's Certificate: Certify products meet or exceed specified requirements.

1.5 QUALITY ASSURANCE

A. Source Limitations: Obtain each type of building insulation through one source from a single Manufacturer.

B. Fire-Test-Response Characteristics: Provide insulation and related materials with the fire-test-response characteristics indicated, as determined by testing identical products per test method indicated below by UL or another testing and inspecting agency acceptable to authorities having jurisdiction. Identify materials with appropriate markings of applicable testing and inspecting agency.
   1. Surface-Burning Characteristics: ASTM E 84
   2. Fire-Resistance Ratings: ASTM E 119
   3. Combustion Characteristics: ASTM E 136.

1.6 QUALIFICATIONS

A. Manufacturer: Company specializing in manufacturing products specified in this section with minimum three years documented experience.

B. Applicator: Company specializing in performing work of this section with minimum three years documented experience.

C. Comply with governing codes and regulations

1.7 COORDINATION

A. Section 01300 - Administrative Requirements: Coordination and project conditions.

B. Coordinate the Work with Section 07260 for installation of vapor retarder.

1.8 DELIVERY, STORAGE, AND HANDLING

A. Section 01600 - Product Requirements: Product storage and handling requirements.

B. Protect insulation materials from physical damage and from deterioration by moisture, soiling, and other sources. Store inside and in a dry location. Comply with Manufacturer's written instructions for handling, storing, and protecting during installation.

PART 2 - PRODUCTS

2.1 BATT INSULATION

A. Manufacturers:
   1. CertainTeed Insulation
   2. Johns Manville Model ComfortTherm
   3. Knauf Fiber Glass
   4. Owens Corning Fiberglas
   5. Substitutions: Section 01600 - Product Requirements.

2.2 COMPONENTS

A. Thermal Batt Insulation: ASTM C665, Type II, Class A, Category 1; fiber glass insulation; friction fit, conforming to the following:
   1. Thermal Resistance: R-19 at 6” studs
   2. Thermal Resistance: R-13 at 3 5/8” studs
   3. Batt Size: 16 inch
   4. Facing: Faced on one side with Permeablilty, Facer film -0.5 Perms
   5. Flame/Smoke Properties: Spread 25 or less in accordance with ASTM E84.

B. Acoustical Batt Insulation: ASTM C665, Type II, Class A, Category 1; Poly-encasulated Formaldehyde-free Acoustical fiber glass fiber insulation; friction fit, conforming to the following:
   1. 6 ” batt at 6” studs
   2. 3 ½” batt at 3 5/8” studs
   3. Batt Size: 16 inch
   4. At toilet rooms: Facing: Faced on one side with Permeablilty, Facer film -0.5 Perms
   5. Flame/Smoke Properties: Spread 25 or less in accordance with ASTM E84.

C. Steel wire; galvanized; type and size to suit application.

D. Tape: Polyethylene self-adhering type, mesh reinforced, 2 inch wide.

PART 3 - EXECUTION

3.1 EXAMINATION

A. Section 01300 - Administrative Requirements: Coordination and project conditions.

B. Verify substrate, adjacent materials, and insulation are dry and ready to receive insulation.
   1. Proceed with installation only after unsatisfactory conditions have been corrected.

3.2 INSTALLATION

A. Comply with insulation Manufacturer's written instructions applicable to products and application indicated.

B. Install in exterior spaces without gaps or voids. Do not compress insulation.

C. Trim insulation neatly to fit spaces. Insulate miscellaneous gaps and voids.

D. Fit insulation tight in spaces and tight to exterior side of mechanical and electrical services within plane of insulation.

E. Install with factory applied vapor retarder membrane facing warm side of building spaces. Lap ends and side flanges of membrane between framing members.

F. Metal Framing: Place vapor retarder on warm side of insulation; lap and seal sheet retarder joints over member face. Install per Manufacturer's written instructions.

G. At chase areas; Retain in place with spindle fasteners at 16 inches oc. Retain insulation in place with wire secured to framing members.

H. Tape seal butt ends, lapped flanges, and tears or cuts in membrane.

I. Extend vapor retarder tight to full perimeter of adjacent window and door frames and other items interrupting plane of membrane. Tape seal in place.

J. Coordinate Work this section with vapor retarder specified in Section 07260.

3.3 INSTALLATION OF INSULATION IN CEILINGS FOR SOUND ATTENUATION

A. Install 3-inch- thick, unfaced glass-fiber blanket insulation over suspended ceilings at partitions in a width that extends insulation 48 inches on either side of partition.

B. If indicated on documents, install 3-inch-thick, unfaced glass-fiber blanket insulation over suspended ceilings so that insulation extends over entire ceiling.

3.4 FIELD QUALITY CONTROL

A. Inspections/observations will be performed by Owner to ascertain compliance with specified requirements in accordance with the General Conditions. Do not cover up installation of insulation without Owner review.

3.5 PROTECTION

A. Protect installed insulation from damage due to harmful weather exposures, physical abuse, and other causes. Provide temporary coverings or enclosures where insulation is subject to abuse and cannot be concealed and protected by permanent construction immediately after installation.

END OF SECTION

SECTION 07260
UNDER SLAB VAPOR RETARDER

PART 1 - GENERAL

1.1 SUMMARY

A. Section includes:
   1. Vapor retarder, seam tape, mastic, and pipe boots for installation under concrete slabs.

B. Related Sections:
   1. Section 03100 Concrete Forms and Accessories
   2. Section 03300 Cast-in-place Concrete

1.2 REFERENCES

A. American Society for Testing and Materials (ASTM)
   1. ASTM E 1745-97 (2004) Standard Specification for Plastic Water Vapor
   2. Retarders Used in Contact with Soil or Granular Fill Under Concrete Slabs
   3. ASTM E 154-99 (2005) Standard Test Methods for Water Vapor Retarders Used in Contact with Earth Under Concrete Slabs
   4. ASTM E 96-05 Standard Test Methods for Water Vapor Transmission of Materials
   5. ASTM F 1249-06 Standard Test Method for Water Vapor Transmission Rate Through Plastic Film and Sheeting Using a Modulated Infrared Sensor
   6. ASTM E 1643-98 (2005) Standard Practice for Installation of Water Vapor Retarders Used in Contact with Earth or Granular Fill Under Concrete Slabs

B. American Concrete Institute (ACI)
   1. ACI 302.1R-04 Vapor retarder component (plastic membrane) is not less than 10 mils thick.

1.3 SUBMITTALS

A. Quality Control / Assurance
   1. Manufacturer’s samples, literature
   2. Manufacturer’s installation instructions for placement, seaming and pipe boot installation

PART 2 – PRODUCTS

2.1 MATERIALS

A. Vapor Retarder must have all of the following qualities:
   1. Permeance of less than 0.01 Perms [grains/(ft^2 *hr * in.Hg)] per ASTM F 1249 or ASTM E 96

2. ASTM E 1745 Class A

B. Vapor Retarder products:
1. Stego Wrap Vapor Retarder (10-mil) by Stego Industries LLC, (877) 464-7834 www.stegoindustries.com.
2. Fortifiber Corp., Model Moistop

2.2 ACCESSORIES

A. Seam Tape:
1. Permeance less than 0.3 perms per ASTM F 1249 or ASTM E 96
2. High-density polyethylene film and a rubber-based, pressure-sensitive adhesive, 4" wide.

B. Vapor Proofing Mastic:
1. Permeance less than 0.3 perms per ASTM F 1249 or ASTM E 96
2. Medium-viscosity, water-based, polymer-modified anionic bituminous/asphalt emulsion exhibiting bonding, elongation, and water-proof characteristics.

C. Pipe Boots
1. Construct pipe boots from vapor retarder material, pressure sensitive tape and/or mastic per manufacturer's instructions.

PART 3 – EXECUTION

3.1 PREPARATION

A. Ensure that subsoil is approved by Architect or Geotechnical Engineer.
1. Level and tamp or roll aggregate, sand or granular base.
2. Remove loose or foreign matter capable of impairing adhesion.
3. Clean and prime substrate surfaces to receive adhesive.
4. Do not proceed until sand fill is level and without voids, and plumbing and electrical rough-ins are complete

3.2 INSTALLATION

A. Install vapor retarder in accordance with manufacturer's instructions and ASTM E 1643-98 (2005).
1. Unroll vapor retarder with the longest dimension parallel with the direction of the concrete pour.
2. Lap vapor retarder over footings and/or seal to foundation walls.
3. Overlap joints 6 inches and seal with manufacturer's tape.
4. Seal all penetrations (including pipes) per manufacturer's instructions.
5. No penetration of the vapor retarder is allowed except for reinforcing steel and permanent utilities.
6. Repair damaged areas by cutting patches of vapor retarder, overlapping damaged area 6 inches and taping all four sides with tape.

END OF SECTION

SECTION 07270
ROOF UNDERLAYMENT BARRIER

PART 1 - GENERAL

1.1 SUMMARY

A. Section includes sheet materials for controlling vapor diffusion.

B. Related Sections:
1. Section 05312 – Steel Roof Deck
2. Section 07200 – Board Insulation
3. Section 07413 – Sheet Metal Roof

1.2 REFERENCES

A. ASTM International:
1. ASTM C920 - Standard Specification for Elastomeric Joint Sealants.
2. ASTM E96 - Standard Test Methods for Water Vapor Transmission of Materials.

B. Sealant, Waterproofing and Restoration Institute:
1. SWRI - Sealant Specification.

1.3 PERFORMANCE REQUIREMENTS

A. Maximum Vapor Permeability (Perm): <.01 ng/S/m/Pa measured in accordance with ASTM E96 Method E.

1.4 SUBMITTALS

A. Section 01330 - Submittal Procedures: Submittal procedures.

B. Product Data: Submit data indicating material characteristics, performance criteria, and limitations.

C. Manufacturer’s Installation Instructions: Submit preparation and installation requirements, techniques.

1.5 QUALITY ASSURANCE

A. Perform Work in accordance with SWRI - Sealant and Caulking Guide Specification requirements for materials and installation.

1.6 MOCKUP

A. Section 01400 - Quality Requirements: Requirements for mockup.

B. Construct mock-up of underlayment barrier installation at roof.

C. Locate where directed by Architect.

D. Incorporate accepted mockup as part of Work.

1.7 SEQUENCING

A. Do not install vapor retarder until items penetrating vapor retarder are in place.

B. Coordination installation with scheduled concrete pours to avoid delays. Make provisions for installation of work by other trades.

PART 2 GENERAL

2.1 SECTION INCLUDES

A. Self Adhering Sheet Flashing.

2.2 REFERENCES

A. ASTM D 570 - Standard Test Method for Water Absorption of Plastics.

B. ASTM D 828 - Standard Test Method for Tensile Properties of Paper and Paperboard Using Constant-Rate-of-Elongation Apparatus.

C. ASTM D 903 - Standard Test Method for Peel or Stripping Strength of Adhesive Bonds.

D. ASTM D 2822 - Standard Specification for Asphalt Roof Cement.

E. ASTM E 96 - Standard Test Methods for Water Vapor Transmission of Materials.

2.3 SUBMITTALS

A. Submit under provisions of Section 01300.

B. Product Data: Manufacturer's data sheets on each product to be used, including:
1. Preparation instructions and recommendations.
2. Storage and handling requirements and recommendations.
3. Material Safety Data Sheets (MSDS).
4. Installation methods.

C. Shop Drawings:

D. Selection Samples: For each finish product specified, two samples representing manufacturer's full range of available colors and materials.

E. Verification Samples: For each finish product specified, two samples, minimum size 2 inches (51 mm) square representing actual product, color, and pattern.

2.4 QUALITY ASSURANCE

A. Manufacturer Qualifications: All products are to be provided by a single manufacturer with at least ten (10) years experience manufacturing all materials specified in this section.

B. Installer Qualifications: Products are to be applied by a single installer with a minimum of five (5) years experience successfully installing all products specified in this section.

C. Mock-Up: Provide a mock-up for evaluation of surface preparation techniques and application workmanship.
   1. Finish areas designated by Architect.
   2. Do not proceed with remaining work until workmanship, color, and sheen are approved by Architect.
   3. Refinish mock-up area as required to produce acceptable work.

2.5 DELIVERY, STORAGE, AND HANDLING

A. Store products in manufacturer's unopened packaging until ready for installation.

B. Avoid Prolonged exposure to sunlight.

2.6 PROJECT CONDITIONS

A. Maintain environmental conditions (temperature, humidity, and ventilation) within limits recommended by manufacturer for optimum results. Do not install products under environmental conditions outside manufacturer's absolute limits.

B. Temperatures are not to exceed 120 degrees Fahrenheit (49C) or go below 25 degrees Fahrenheit (-4C).

2.7 WARRANTY

A. At project closeout, provide to the owner a copy of the manufacturer's standard form document outlining the terms, conditions and duration of their Limited Warranty Against Manufacturing Defect.

PART 3 PRODUCTS

3.1 MANUFACTURERS

A. Acceptable Manufacturer: Fiberweb; Clark/Hammerbeam Corp., which is located at: 886 Washington St. P. O. Box 381 ; Dedham, MA 02027; Tel: 781-461-1946; Fax: 781-461-1314; Email: request info; Web: www.fiberwebflashing.com or approved equal

B. Requests for substitutions will be considered in accordance with provisions of Section 01630.

3.2 SELF-ADHERING SHEET FLASHING

A. AQUAFLASH 500 Flexible Metal Flashing: Self-adhering waterproofing membrane with a siliconized Kraft paper release liner.
   1. Composition: 32 mils of rubberized asphalt bonded to 8 mils high density cross laminated polyethylene film
   2. Total Thickness: 40 mils
   3. Roll Width: 12 inches (305mm).
   4. Roll Width: 16 inches (406mm).
   5. Roll Width: 18 inches (457mm).
   6. Roll Width: 24 inches (610mm).
   7. Roll Width: 36 inches (914mm).
   8. Pliability: Pass 1/2 inch (13mm) mandrel test at minus 30 Degrees F (-34.4C) in accordance with ASTM D 146.
   9. Peel Adhesion: Tested in accordance with ASTM D 903.
      a. Dry: 10 pounds per inch (1.13 N-m) minimum.
      b. Wet: 5 pounds per inch (0.56 N-m) minimum.
   10. Elongation: 350 percent tested in accordance with ASTM D 412.
   11. Membrane Tensile strength: 800 psi minimum tested in accordance with ASTM D 412 Die C modified.
   12. Puncture Resistance: 90 pounds minimum tested in accordance with ASTM E 154.
   13. Tear Resistance: 16 pounds minimum tested in accordance with ASTM E 154.

3.3 ADHESIVES AND PRIMERS

A. AQUAFLASH 500 Mastic: All-weather, solvent based rubberized asphalt mastic specifically formulated to promote maximum adhesion between the asphalt sheet membrane and the substrate.
   1. Viscosity: 4000 poise.
   2. Flash Point: 100 Degrees F (37.8C).
   3. VOC: 240 g/l.

B. Primer: To be used for substrate preparation as recommended by waterproofing membrane Manufacturer

PART 4 EXECUTION

4.1 EXAMINATION

A. Do not begin installation until substrates have been properly prepared.

B. If substrate preparation is the responsibility of another installer, notify Architect of unsatisfactory preparation before proceeding.

4.2 PREPARATION

A. Clean surfaces thoroughly prior to installation.

B. Prepare surfaces using the methods recommended by the manufacturer for achieving the best result for the substrate under the project conditions.

C. Primer Application:
   1. Spray, roll or brush apply primer at a rate of 250 - 300 square feet (23.2 - 27.9 sm) per gallon
   2. At 75 degrees Fahrenheit (24C), allow primer to dry 1 hour.
   3. Re-prime prior to application of waterproofing membrane if either contaminated by dust or primer has exceeded the maximum 8 hour dry time.

4.3 INSTALLATION

A. Install in accordance with manufacturer's instructions shop drawings.

4.4 PROTECTION

A. Protect installed products until completion of project.

B. Touch-up, repair or replace damaged products before Substantial Completion.

END OF SECTION

SECTION 07413

SHEET METAL ROOF / WALL AND SOFFIT PANELS

PART 1 - GENERAL

1.1 SUMMARY

A. Section Includes:
1. Structural standing seam metal roofing
2. Metal vented soffit panels
3. Flush metal siding panels
4. Metal Roof Curbs
5. Metal Roof Walkways

B. Related Sections:
1. Section 07213 - Insulation Board
2. Section 07900 - Joint Sealers
3. Section 09900 - Painting

1.2 REFERENCES

A. American Iron and Steel Institute:
1. AISI SG-973 - Cold-Formed Steel Design Manual.

B. American Society of Civil Engineers:
1. ASCE 7 - Minimum Design Loads for Buildings and Other Structures.

C. American Society for Testing and Materials:
1. ASTM A792/A792M - Standard Specification for Steel Sheet, 55% Aluminum-Zinc Alloy Coated by the Hot-Dip Process, General Requirements

D. National Roofing Contractors Association:
1. NRCA - The NRCA Roofing and Waterproofing Manual.

E. Sheet Metal Contractors:
1. SMACNA - Architectural Sheet Metal Manual.

F. Underwriters Laboratories Inc.:
1. UL 580 - Tests for Uplift Resistance of Roof Assemblies.

1.3 DESIGN REQUIREMENTS

A. Roof Loads: Design roofing to resist live and dead loads with 1/240 maximum deflection.
1. Live Loads: 20PSF or as required by building code, whichever is greater
2. Dead Loads: Actual weight of materials incorporated into Work.

B. Wind Loads: Design and size components to withstand positive and negative wind loads, including increased loads at building corners, edges, and field of roof.
   1. Design Wind Load: As calculated in accordance with International Building Code (IBC) and ASCE 7 basic wind speed, exposure C.

C. Wind Uplift Resistance: UL 580; Class 90.

D. Air Infiltration: Limit air leakage through roof assembly to 0.03 cfm/sq ft of wall area, measured at reference differential pressure across assembly of 6.24 psf as measured in accordance with ASTM E283.

E. Water Leakage: None, when measured in accordance with ASTM E1646-95 with test pressure of 12.00 psf pressure differential with no uncontrollable water leakage when five gallons per hour of water is sprayed per square foot of roof area.

F. Exterior Components: Accommodate the following without damage to system, components or deterioration of seals.
   1. Movement within system
   2. Movement between system and perimeter framing components
   3. Dynamic loading and release of loads
   4. Deflection of structural support framing
   5. Expansion and contraction from temperature range of 210 degrees F over 12-hour period.

G. ALBEDO REQUIREMENTS: Actual independent laboratory certified test results must be submitted. Manufacturer must be an EnergyStar listed partner (www.energystar.gov).
   1. Emissivity (roof ability to emit absorbed solar energy) - greater than or equal to 0.85 for roofs with a 2:12 slope or steeper when tested at 14,000 hours irradiance per ASTM C1371.
   2. Initial Solar Reflectance (roof ability to reflect solar energy) - greater than or equal to 0.25 for roofs with a 2:12 slope or steeper when tested at 14,000 hours irradiance per ASTM C1549.
   3. Recycled Content - manufactured products must contain a minimum of 25% post-consumer recycled content.

1.4 SUBMITTALS

A. Section 01330 - Submittal Procedures

B. Shop Drawings:
   1. Indicate metal roofing and soffit panel profiles, jointing patterns, jointing details, fastening methods, flashings, terminations, and installation details.

C. Product Data:
   1. Submit data on metal types, finishes, and characteristics.
   2. Submit color charts for finish selection to Architect and TxDOT Project Manager.

D. Design Data:

1. Submit structural design calculations for metal roofing in conjunction with structural supports within construction documents signed and sealed by professional engineer licensed in the State of Texas.

E. Manufacturer's Installation Instructions: Submit instructions including special procedures for roofing penetrations, flashings, and perimeter conditions requiring special attention.

F. Manufacturer's Certificate: Certify Products meet or exceed specified requirements.

G. Submittals for Closeout

1. Project Record Documents: Record actual locations of concealed components and utilities. Record any changes to Construction Documents during construction and provide original As-Built set to TxDOT Project Manager at end of project. Contractor is required to maintain As-Built set on site and when changes occur. Progress Payments will be based on maintaining current As-Built set on a monthly basis and will be checked by TxDOT Project Manager.

2. Upon completion of erection, submit written Certification prepared and signed by the design Professional Engineer, qualified herein, attesting to his/her field verification of the erection being in accordance with his/her shop drawings.

1.5 QUALITY ASSURANCE

A. Perform Work in accordance with AISC - Quality Certification Program Category MB. MBMA - Metal Building Systems Manual and MBMA - Low Rise Building Systems Manual. Maintain one copy on site.

B. Manufacturer Qualifications: Company specializing in manufacturing the Products specified in this section with minimum five years documented experience with certification statement.

C. Erector Qualifications: Company specializing in performing the work of this Section with minimum of five years documented experience and certified trained by Manufacturer. Project Foreman must have specific training in proper installation of specified wall and roof systems with certification, and must submit qualifications of Foreman stated experience with this roofing system. Submit five references from five different architects or owners for systems that have been installed for at least two years and stating that the performance has been satisfactory.

D. Design structural components, develop shop drawings, and perform shop and site work under direct supervision of a Professional Structural Engineer experienced in design of this work and licensed in the State of Texas.

1.6 QUALIFICATIONS

A. Manufacturer: Company specializing in manufacturing Products specified in this section shall have a minimum of five years documented experience.

B. Installer: Company specializing in performing work of this section shall have a minimum of three years documented experience. This company shall provide owner with a Roofing Manufacturing and Installer's Certification that the roof has been designed based on the design criteria as specified and installed according the Manufacturer's standards. Contractor to provide copy of Manufacturer's approved Installer training certificate.

C. A certified Installer shall be on the job site, at all times during installation of the roof.

D. The roof shall be inspected by a certified Manufacturer's representative at least three separate occasions: at the beginning, midpoint and at completion of installation and all deficiencies shall be corrected, prior to substantial completion. Manufacturer's field reports must be sent directly to TxDOT within five days of each inspection.

E. The design of the metal roofing and structural supports shall be designed by a Professional Engineer experienced in design of this Work and licensed in State of Texas.

1.7 DELIVERY, STORAGE, AND HANDLING

A. Stack material to prevent twisting, bending, and abrasion, and to provide ventilation. Slope metal sheets to ensure drainage.

B. Prevent contact with materials causing discoloration or staining.

1.8 FIELD MEASUREMENTS

A. Verify field measurements prior to fabrication.

1.9 COORDINATION

A. Section 01300 - Administrative Requirements

B. Coordinate with Work of Section 07213 for insulation installed within roof assembly.

1.10 WARRANTY

A. Section 01700 - Execution Requirements: Requirements for warranties.

B. Furnish 20 year Galvalume substrate Manufacturer warranty for sheet metal roofing against structural failure, corrosion, and perforation.

C. Furnish 2 year Contractor warranty against leakage due to construction methods used for installation of roof, flashing, and all penetrations.

D. Weather Tightness Warranty: Provide a 20 (twenty) year warranty for occupied buildings against leakage due to construction methods used for installation of roof, flashing, and all penetrations. Provide a Single Source warranty from the Manufacturer with a No Dollar Limit (NDL) during the warranty period starting from the time of Substantial Completion throughout length of warranty. The roofing Manufacturer warrants to the Building Owner (TxDOT) that the roofing system will not allow intrusion

of water from the exterior into the building during the warranty period. Manufacturer representative will make at least two inspections during the roof installation and one final inspection to confirm correct roofing installation per Manufacturer's requirements. A certified Installer must be on site at all times during the roof installation. Provide Manufacturers representative field reports directly to TxDOT Project Manager.

F. Submit sample of Manufacturer's warranty for review when other shop drawings are submitted. Final warranty will be signed by Manufacturer and Installer, but will not require signature of the owner.

PART 2 - PRODUCTS

2.1 MANUFACTURED SHEET METAL ROOFING, SIDING, SOFFITS, ETC.

A. Manufacturers:
1. Alliance Metal Products
2. ALERT
3. AEP Span (SpanLok-HP, Smooth flat Panel)
4. MBCI. –BattenLock, Smooth flat panel
5. LM Curbs – Mechanical Equipment supports, Roof Curbs and Unistrut Roof Walkways connected with S-5-U connectors
6. Substitutions: Section 01630 - Product Requirements.

B. Structural Standing Seam Metal Roofing: Factory formed metal roofing panel system with concealed fasteners:
1. Roof Panel Materials: Pre-finished steel sheet 22 gauge base metal, minimum thickness
2. Panel Width: Nominal 16 inches
3. Panel Profile: Flat Panel (Striations, ribs or pencil ribs are unacceptable)
4. Color: Pre-finished Galvalume.
5. Length – 80' long panels maximum ; continuous length without joints.

C. Wall panels, for gable ends, fascias, siding, or as shown on drawings:
1. Wall Panel Materials: Pre-finished steel sheet 24 gauge base metal, minimum thickness.
2. Panel Width: Nominal 36 inches
3. Panel Profile: R- panel profile
4. Color: Pre-finished Kynar. Color as specified by Architect.

D. Roof Curbs: LM Curbs

E. Roof Walkways: LM Curbs

F. Metal Soffit Panels: Factory formed metal soffit panel system with concealed fasteners:
1. Panel Materials: Pre-finished steel sheet 24 gauge base metal thickness
2. Panel Width: Nominal 12 inches
3. Panel Profile: Flat Panels as shown on drawings
4. Panel Depth: Nominal 1/2 inches

5. Panel Joint: Interlocked
6. Minimum 24 gauge metal thickness with L12B male/female edges
7. Color: Pre-finished Kynar. Color as specified by Architect.

2.2 SHEET METAL MATERIALS

A. Pre-Finished Galvalume Steel Sheet: ASTM A792 coil coated.
   1. Base Metal: ASTM A792/A792M - Standard Specification for Steel Sheet, 55% Aluminum-Zinc Alloy Coated by the Hot-Dip Process, General Requirements
   2. Unexposed Finish: Manufacturer's standard Acrylic coating.

2.3 ACCESSORIES

A. Fasteners: Same material and finish as roofing metal, with soft neoprene washers where exposed.

B. Curbs and all accessories to be provided by or approved by Manufacturer.

C. Field Sealants:
   1. Color coordinated primerless polyurethane in exposed locations and high grade non-skinning nondrying synthetic butyl where there is no exterior exposure such as between laps.
   2. Refer to section 07900 of these specifications.
   3. Do not use sealants containing asphalt.

2.4 FABRICATION

A. Panels:
   1. Provide factory formed panel widths of 16", with a 2" high standing seam. Form sections shape as indicated on Drawings, accurate in size, square, and free from distortion or defects. Form panels and accessories in factory utilizing fixed base roll-formers and provide signed affidavit verifying factory fabrication. The use of portable roll-formers is specifically prohibited.
   2. On-site or field roll-formed panels are not acceptable.
   3. Provide panels in full length from ridge to eave.
   4. Roof panels shall have flush horizontal and vertical surfaces to facilitate sealing at terminations. Panel configurations that create voids and require supplemental closure devices are acceptable.

B. Seams:
   1. Panel seams shall interlock entire length of seam.
   2. Design standing seam to lock up and resist joint disengagement during design wind uplift conditions as calculated to comply with local building codes and design uplift criteria.
   3. Provide factory sealant within confines of trailing edge of female seam leg to aid in resistance of leaks and provide panel-to-panel seal while allowing expansion and contraction movement, and the seams shall be continuously locked or crimped together by mechanical means during installation.

C. Clips:
1. Provide UL listed clip designed to allow panels to thermally expand and contract and provide a minimum of ± 1 inch of thermal movement. Clip shall incorporate a self-centering feature to allow a minimum of 1" of movement in both directions along panel length.
2. Clip shall be designed to meet positive and negative pressures as calculated per local building code and as engineered by the roofing system Manufacturer.
3. Provide two-piece floating clips to allow vertical adjustment to assure alignment.

D. Anchors: Engineer panels to use concealed anchors that permit expansion and contraction, except at end laps, ridges and hips.
1. Fabricate cleats of same material as sheet, to interlock with sheet.

E. Fascias/Trim/Flashings:
1. Pre-finished sheet metal designed by the Manufacturer in the same gauge, material and finish as the structural standing seam metal roofing system.
2. Locations, design, sealing and fastening methods as per the Manufacturer's approved engineered shop drawings.
3. Fabricate fascia, trim, flashing, and other metal components from same material as metal roof panels. Provide exposed metal surfaces with same finish as exposed face of metal roof panels.

F. Fabricate starter strips of same material and color as sheet, continuous, to interlock with sheet.

G. Form flashing and edging pieces in longest practical lengths overlapping and sealing with down slope pieces or adjacent pieces or horizontal planes in accordance with roofing Manufacturer's specifications.

H. Hem exposed edges on underside 1/2 inch; miter and seam corners.

I. At moving joints, use sealed lapped, bayonet-type or interlocking hooked seams in accordance with Roofing Manufacturer's Specifications.

J. Fabricate corners from one piece with minimum 18 inch long legs; seam for rigidity, seal with sealant as and if necessary in same color as roof panels.

K. Fabricate vertical faces with bottom edge formed outward 1/4 inch and hemmed to form drip. (where applicable)

2.5 FINISH

A. Pre-Finished Galvalume Steel Sheet: ASTM A792 coil coated.

PART 3 - EXECUTION

3.1 CONNECTING WORK

A. General:
1. Field cut materials by shearing only cutting by torch or saw is not permitted.
2. Do not apply roofing during inclement weather.
3. Do not apply roofing to damp or frozen deck surface.
4. Do not expose materials vulnerable to water, wind or sun damage in quantities greater than can be weatherproofed during the same day.
5. Rigidly fasten Ridge of metal roof panels and allow free eave movement due to thermal expansion and contraction per the approved shop drawings.
6. Install screws and fasteners with power tools having controlled torque.
7. Locate and space fasteners per the approved shop drawings in true vertical and horizontal alignment.
8. Install Ridge, Hip and penetration flashings per the approved shop drawings as work progresses.

B. Surfaces: The Panel Applicator shall examine all surfaces on which their work is to be applied, and shall notify the architect in writing if not suitable to receive their work. Work on any surface shall constitute acceptance of this surface by the Panel Applicator. After beginning installation, install approximately 500 square feet of panels for Architect's approval, before proceeding with substantial work.

C. Wood Members, Units: Provide wood pressure treated with water-borne preservatives for above ground use. All nailers shall be anchored sufficiently to resist a force of 75 pounds per linear foot in any direction. Provide nailers at all locations required by the roofing Manufacturer (whether shown or not).

3.2 FIELD MEASUREMENTS

A. Field Verification: Panel Applicator must take field measurements to verify or supplement dimensions indicated prior to fabrication of any materials. Where field measurements cannot be made without delaying the work, either establish opening dimensions and proceed with fabricating panels without field measurements or allow for trimming panel units.

3.3 EXAMINATION

A. Section 01300 - Administrative Requirements: Verification of existing conditions before starting work.

B. Metal Hat Channel Substrate (not applicable with engineered component system):
1. Inspect Hat Channels to verify Channels are clean and smooth, free of depressions, waves, or projections, and properly spaced to eaves.
2. Verify hat channel is dry.
3. Verify substrate joints are solidly supported and fastened.

C. Structural Framing Substrate:

1. Verify primary and secondary framing members are installed and fastened, properly aligned and sloped to eaves.
2. Verify eave, soffit and fascia portions of framing are properly aligned, even with no waves depressions or projections and are properly spaced. Do not begin roof panel installation until all deviations are corrected.
3. Verify damaged shop coatings are repaired with touch up paint per Manufacturer's specifications.

D. Verify roof openings, curbs, pipes, sleeves, ducts, or vents through new roof are solidly set, reglets are in place, and securing strips located and adequate for weather tight seals.

E. Verify roofing termination and base flashings are in place, sealed, and secure.

F. Verify insulation is installed with no tears or inconsistencies and ready for roof application.

3.4 PREPARATION

A. Back paint concealed metal surfaces and surfaces in contact with dissimilar metals with protective backing paint to minimum dry film thickness of 15 mil.

3.5 ROOF AND PANEL LAYOUT

A. Measure roof structure before starting.

B. Check substrate for plane and evenness.

C. Layout areas and check for squareness.

D. Balance layout around all penetrations.

E. Equalize first and last panels in a run.

F. Consider all gables and rakes to be "flying".

G. Square off eave lines.

H. Starter panels should be cut to module.

I. Use offset lines to maintain alignment.

J. Identify panel clip layout and spacing.

K. Chalk layout lines for permanent layout.

3.6 INSTALLATION - STANDING SEAM METAL ROOFING

A. Know and follow approved shop drawings.

B. Limit exposure time of underlayments.

C. Check and double check all clip spacings.

D. Check layout often to prevent module gain.

E. Allow for proper thermal movement.

F. Use proper fasteners and sealants.

G. Remove all drill shavings and metal scraps.

H. Install furring to support roof panel side laps and receive fasteners. Use concealed fasteners only.

I. Floating connection at eave end of panel. Conceal fixed ends.

J. Install roofing panels with long dimension perpendicular to eaves terminating 1/4" from end of metal drip edge.

K. Install roofing panels full length from ridge vent to 1/4” from eave drip edge.

L. Any partial panels must be rigidly fixed at one end only. Fixed end must be clearly indicated on shop drawings

M. Install 2.5” articulating clips in accordance with roofing Manufacturer’s Specification to secure roof panels without deforming or oil-canning roof panels.

N. Machine form standing seam between adjacent roofing panels. Hand form joints where machine forming is not possible.

O. Terminate roofing panels with sheet metal trim and flashing for watertight installation. Close and conceal openings between roofing panels, panel seams, and roof substrate in accordance with roofing Manufacturer’s Specification.

P. Paint and hem all edges and ends of roof panels which have been trimmed or cut.

Q. Seal metal joints watertight.

R. Where and if caulk sealant is used sealant must match roofing color.

S. Joints or gaps requiring sealant must be less than 1/16" or reinstallation must occur.

T. Install valleys when needed in one piece. If overlap is necessary, overlap one foot and seal down slope, a minimum 3 feet from end of valley.

3.7 INSTALLATION - SOFFIT PANELS

A. Install perimeter trim, level and aligned perpendicular with fascia.

B. Install soffit panels to form flat, flush surface.

C. Fit soffit panels in single length between perimeter trim.

D. Install perforated soffit panels at locations indicated on Drawings.

E. Adjust panels for uniform joints aligning with roofing flutes where adjacent.

3.8 PROTECTION OF INSTALLED CONSTRUCTION

A. Section 01700 - Execution Requirements: Protecting installed construction.

B. Do not permit traffic over unprotected roof surface.

C. Provide water stop protection at end of every working day to prevent any water infiltration into building. If roof leaks occur, Contractor will respond to emergency calls within 4 hours notice.

END OF SECTION

SECTION – 07614
PREFABRICATED METAL BUILDING ROOF CURBS

PART 1 - GENERAL

1.1 SUMMARY

A. The general conditions and supplemental general conditions of the contract apply to this section as if completely written herein.

B. The General Contractor shall provide all labor, material and equipment to completely install prefabricated Metal Roof Curbs.

C. Prefabricated Metal Roof Curbs shall be used at all roof penetrations including but not limited to HVAC units, skylights, duct openings, pipe penetrations, and exhaust fans.

PART 2 - PRODUCTS

2.1 Prefabricated Metal Roof Curbs shall be manufactured by Metal Building Manufacturer or LMCurbs. (LMCurbs, 609 Fisher Road (P.O. Box 5299), Longview, Texas 75604 (75608-5299), 1-903-759-1331, 1-800-284-1412, Fax # 903-759-0879)

PART 3 - CONSTRUCTION

3.1 Curbs shall be constructed using minimum .080, 3003H14 aluminum, or heavier as required to support the load of the equipment, with fully mitered and heli-arc welded corners, integral base plates, with water diverter cricket. Factory installed insulation available upon request.

3.2 Minimum height of Curb shall be 8" above finished roof (or as specified).

3.3 Curbs shall be constructed to match slope of roof and provide a level top surface for mounting of equipment.

3.4 Curb flange shall be constructed to match configuration of roof panel. Side flange shall extend to the next natural seam in the roof panels and conform to seam configurations.

PART 4 - COORDINATION

4.1 Size of curbs and required options shall be coordinated by curb Manufacturer, General Contractor, and mechanical Contractor prior to fabrication.

4.2 Shop drawings bearing architects approval shall be used for the fabrication of the curbs.

END OF SECTION

SECTION 07840
FIRESTOPPING

PART 1 - GENERAL

1.1 SUMMARY

A. Section includes firestopping and through-penetration protection system materials and accessories; firestopping tops of fire rated walls; and smoke sealing at joints between floor slabs and exterior walls.

B. Related Sections:
1. Section 07260 - Vapor Retarders: Vapor retarder materials to adjacent insulation
2. Section 09260 - Gypsum Board Assemblies: Gypsum board fireproofing
3. Division 15 - Mechanical: Mechanical work requiring firestopping
4. Division 16 - Electrical: Electrical work requiring firestopping.

1.2 REFERENCES

A. ASTM International:
1. ASTM E84 - Standard Test Method for Surface Burning Characteristics of Building Materials
2. ASTM E119 - Standard Test Methods for Fire Tests of Building Construction and Materials
3. ASTM E814 - Standard Test Method for Fire Tests of Through-Penetration Fire Stops.

B. Underwriters Laboratories Inc.:
1. UL 263 - Fire Tests of Building Construction and Materials
2. UL 723 - Tests for Surface Burning Characteristics of Building Materials
3. UL 1479 - Fire Tests of Through-Penetration Firestops
4. UL - Fire Resistance Directory.

C. Intertek Testing Services (Warnock Hersey Listed):
1. WH - Certification Listings.

1.3 DEFINITIONS

A. Firestopping (Through-Penetration Protection System): Sealing or stuffing material or assembly placed in spaces between and penetrations through building materials to arrest movement of fire, smoke, heat, and hot gases through fire rated construction.

1.4 SYSTEM DESCRIPTION

A. Firestopping Materials: ASTM E119, ASTM E814, UL 263, UL 1479, to achieve fire ratings of adjacent construction noted in accordance with UL Design Numbers noted on Drawings or noted in Schedule at end of this section.

B. Surface Burning: ASTM E84 UL 723 with maximum flame spread / smoke developed rating of 25/450.

C. Firestop interruptions to fire rated assemblies, materials, and components.

1.5 PERFORMANCE REQUIREMENTS

A. Conform to applicable code for fire resistance ratings and surface burning characteristics.

1.6 SUBMITTALS

A. Section 01330 - Submittal Procedures: Submittal procedures.

B. Product Data: Submit data on product characteristics, performance and limitation criteria.

C. Shop Drawings: For each through-penetration firestop system, show each type of construction condition penetrated, relationships to adjoining construction, and type of penetrating item. Include firestop design designation of qualified testing and inspecting agency that evidences compliance with requirements for each condition indicated.
1. Submit documentation, including illustrations, from a qualified testing and inspecting agency that is applicable to each through-penetration firestop system configuration for construction and penetrating items.
2. Where Project conditions require modification to a qualified testing and inspecting agency's illustration for a particular through-penetration firestop condition, submit illustration, with modifications marked, approved by through-penetration firestop system Manufacturer's fire-protection engineer as an engineering judgment or equivalent fire-resistance-rated assembly.

D. Schedule: Submit schedule of opening locations and sizes, penetrating items, and required listed design numbers to seal openings to maintain fire resistance rating of adjacent assembly.

E. Manufacturer's Installation Instructions: Submit preparation and installation instructions.

F. Manufacturer's Certificate: Certify products meet or exceed applicable code requirements.

G. Engineering Judgments: For conditions not covered by UL or WH listed designs, submit judgments by licensed professional engineer suitable for presentation to authority having jurisdiction for acceptance as meeting code fire protection requirements.

H. Qualification Data: For Installer

1.7 QUALIFICATIONS

A. Manufacturer: Company specializing in manufacturing products specified in this section with minimum three years documented experience.

B. Applicator: Company specializing in performing Work of this section with minimum three years documented experience.

1.8 DELIVERY, STORAGE, AND HANDLING

A. Section 01600 - Product Requirements: Product storage and handling requirements.

B. Deliver through-penetration firestop system products to Project site in original, unopened containers or packages with intact and legible Manufacturers' labels identifying product and Manufacturer, date of manufacture, lot number, shelf life if applicable, qualified testing and inspecting agency's classification marking applicable to Project, curing time, and mixing instructions for multicomponent materials.

C. Store and handle materials for through-penetration firestop systems to prevent their deterioration or damage due to moisture, temperature changes, contaminants, or other causes.

1.9 MOCKUP

A. Section 01400 - Quality Requirements: Requirements for mockup.

B. Apply 1 linear ft of each type of linear firestopping material to representative substrate surface.

C. Apply one of each unit type of firestopping material, such as penetrations through fire rated partition, to representative application.

D. Locate where directed by Architect/Engineer.

E. Incorporate accepted mockup as part of Work.

1.10 ENVIRONMENTAL REQUIREMENTS

A. Section 01600 - Product Requirements.

B. Do not apply materials when temperature of substrate material and ambient air is below 60 degrees F.

C. Maintain this minimum temperature before, during, and for minimum 3 days after installation of materials.

D. Provide ventilation in areas to receive solvent cured materials.

E. Coordinate construction of openings and penetrating items to ensure that through-penetration firestop systems are installed according to specified requirements.

F. Do not cover up through-penetration firestop system installations that will become concealed behind other construction until each installation has been examined by building inspector, if required by authorities having jurisdiction.

PART 2 - PRODUCTS

2.1 FIRESTOPPING

A. Manufacturers:
1. A/D Fire Protection Systems, Inc. Model Firebarrier Firestop Systems
2. Grace Construction Model Flamesafe
3. Hilti Corp. Model Firestop
4. Pecora Corporation Model Firestop
5. USG Corp. Model Firecode
6. Substitutions: Section 01600 - Product Requirements.

B. Product Description: Different types of products by multiple Manufacturers are acceptable as required to meet specified system description and performance requirements; provide only one type for each similar application.
1. Silicone Firestopping Elastomeric Firestopping: Single component silicone elastomeric compound and compatible silicone sealant.
2. Foam Firestopping Compounds: Single component foam compound.
3. Formulated Firestopping Compound of Incombustible Fibers: Formulated compound mixed with incombustible non-asbestos fibers.
4. Fiber Stuffing and Sealant Firestopping: Composite of mineral fiber stuffing insulation with silicone elastomer for smoke stopping.
5. Mechanical Firestopping Device with Fillers: Mechanical device with incombustible fillers and silicone elastomer, covered with sheet stainless steel jacket, joined with collars, penetration sealed with flanged stops.
6. Intumescent Firestopping: Intumescent putty compound which expands on exposure to surface heat gain.
7. Firestop Pillows: Formed mineral fiber pillows.

C. Color: As selected from Manufacturer’s full range of colors.

2.2 ACCESSORIES

A. Primer: Type recommended by firestopping Manufacturer for specific substrate surfaces and suitable for required fire ratings.

B. Installation Accessories: Provide clips, collars, fasteners, temporary stops or dams, and other devices required to position and retain materials in place.

C. Tape: Pressure sensitive masking tape as recommended by the firestopping Manufacturer.

PART 3 - EXECUTION

3.1 EXAMINATION

A. Section 01300 - Administrative Requirements: Coordination and project conditions.

B. Verify openings are ready to receive firestopping.

C. Examine substrates, openings, voids, adjoining construction and conditions under which the Work is to be installed. Confirm compatibility of surfaces scheduled to receive firestopping.

D. Verify that penetrating elements are securely fixed and properly located with the proper space allowance between penetrations and surfaces of openings.

E. Do not proceed with Work until unsatisfactory conditions have been corrected.

3.2 PREPARATION

A. Clean substrate surfaces of dirt, dust, grease, oil, loose material, or other matter affecting bond of firestopping material.

B. Remove incompatible materials affecting bond. Do not apply firestopping and smoke seals to surfaces previously painted or treated with sealers, curing compounds, water repellent or other coatings unless tests have been performed to ensure compatibility of materials. Remove coatings as required.

C. Ensure that anchoring devices, back-up materials, clips, sleeves, supports and other related materials used in the actual fire tests are provided.

D. Install backing or damming materials to arrest liquid material leakage.

3.3 APPLICATION

A. Install material at fire rated construction perimeters and openings containing penetrating sleeves, piping, ductwork, conduit and other items, requiring firestopping.

B. Apply primer where recommended by Manufacturer for type of firestopping material and substrate involved, and as required for compliance with required fire ratings.

C. Apply firestopping material in sufficient thickness to achieve required fire and smoke rating, to uniform density and texture.

D. Compress fibered material to maximum 40 percent of its uncompressed size or per Manufacturers' recommendation.

E. Place foamed material in layers to ensure homogenous density, filling cavities and spaces. Place sealant to completely seal junctions with adjacent dissimilar materials.

F. Remove dam material after firestopping material has cured.

3.4 FIELD QUALITY CONTROL

A. Section 01400 - Quality Requirements: Testing and Inspection Services.

B. Inspect installed firestopping for compliance with specifications and submitted schedule.

C. Notify Consultant when completed installations are ready for inspection prior to concealing or enclosing an area containing firestopping materials.

D. Following field inspections, provide all repair as required to ensure compliance.

3.5 CLEANING

A. Section 01700 - Execution Requirements: Final cleaning.

B. Clean adjacent surfaces of firestopping materials.

3.6 PROTECTION OF INSTALLED CONSTRUCTION

A. Section 01700 - Execution Requirements: Protecting installed construction.

B. Protect adjacent surfaces from damage by material installation.

3.7 SCHEDULES

A. Where UL-classified systems are indicated, they refer to alpha-alpha-numeric designations listed in UL's "Fire Resistance Directory" under product Category XHEZ. Systems below are based on Hilti Firestopping Systems. Other equivalent systems allowed upon approval.

B. Firestop Systems for Metallic Pipes, Conduit, or Tubing FS-1:
   1. UL-Classified Systems: WL 1085 for 1 or 2 hour rated partitions. WL 1111 for 3 hour rated partitions.

C. Firestop Systems for Nonmetallic Pipe, Conduit, or Tubing FS-2:
   1. UL-Classified Systems: WL 2078 for 1 or 2 hour rated partitions. Verify design with Manufacturer for 3 hour rated partitions.

D. Firestop Systems for Electrical Cables FS-3:
   1. UL-Classified Systems: WL 3111 for 1 hour or 2 hour partitions. Verify with Manufacturer for 3 hour rated partitions.

E. Firestop Systems for Cable Trays FS-4:
   1. UL-Classified Systems: WL 4019 for 1 hour or 2 hour partitions. Verify with Manufacturer for 3 hour rated partitions.

F. Firestop Systems for Insulated Pipes FS-5:
   1. UL-Classified Systems: WL 5029 for 1 hour or 2 hour partitions. WL 5073 for 3 hour rated partitions.

G. Firestop Systems for Groupings of Penetrants FS-7:
   1. UL-Classified Systems: WL 8013 for 1 hour or 2 hour partitions. WL 8014 for 3 hour rated partitions.

END OF SECTION

SECTION 07900
JOINT SEALERS

PART 1 - GENERAL

1.1 SUMMARY

A. Section includes sealants and joint backing, precompressed foam sealers, and accessories.

B. Related Sections:
1. Section 07260 - Vapor Retarders: Sealants required in conjunction with vapor retarders
2. Section 07270 - Air Barriers: Sealants required in conjunction with air barriers
3. Section 07840 - Firestopping: Firestopping sealants
4. Section 09260 - Gypsum Board Assemblies: Acoustic sealant
5. Section 09300 - Tile: Sealant used as tile grout.

1.2 REFERENCES

A. ASTM International:
1. ASTM C834 - Standard Specification for Latex Sealants
2. ASTM C919 - Standard Practice for Use of Sealants in Acoustical Applications
3. ASTM C920 - Standard Specification for Elastomeric Joint Sealants
4. ASTM C1193 - Standard Guide for Use of Joint Sealants
5. ASTM D1056 - Standard Specification for Flexible Cellular Materials-Sponge or Expanded Rubber
6. ASTM D1667 - Standard Specification for Flexible Cellular Materials-Vinyl Chloride Polymers and Copolymers (Closed-Cell Foam)
7. ASTM D2628 - Standard Specification for Preformed Polychloroprene Elastomeric Joint Seals for Concrete Pavements.

1.3 SUBMITTALS

A. Section 01330 - Submittal Procedures: Submittal procedures.

B. Products Data: Submit data indicating sealant chemical characteristics, performance criteria, substrate preparation, limitations, and color availability.

C. Product Certificates: For each type of joint sealant and accessory, signed by product Manufacturer.

D. Samples for Initial Selection: Manufacturer's color charts consisting of strips of cured sealants showing the full range of colors available for each product exposed to view.

E. Samples for Verification: For each type and color of joint sealant required, provide Samples with joint sealants in 1/2-inch- wide joints formed between two 6-inch- long strips of material matching the appearance of exposed surfaces adjacent to joint sealants.

F. Manufacturer's Installation Instructions: Submit special procedures, surface preparation, and perimeter conditions requiring special attention.

G. SWRI Validation Certificate: For each elastomeric sealant specified to be validated by SWRI's Sealant Validation Program.

H. Product Test Reports: Based on comprehensive testing of product formulations performed by a qualified testing agency, indicating that sealants comply with requirements.

I. Warranty: Include coverage for installed sealants and accessories failing to achieve airtight seal, exhibit loss of adhesion or cohesion, and sealants which do not cure.

1.4 QUALITY ASSURANCE

A. Source Limitations: Obtain each type of joint sealant through one source from a single Manufacturer.

B. Product Testing: Obtain test results for "Product Test Reports" Paragraph in "Submittals" Article from a qualified testing agency based on testing current sealant formulations within a 36-month period preceding the Notice to Proceed with the Work.

1. Testing Agency Qualifications: An independent testing agency qualified according to ASTM C 1021 to conduct the testing indicated, as documented according to ASTM E 548.
2. Test elastomeric joint sealants for compliance with requirements specified by reference to ASTM C 920, and where applicable, to other standard test methods.
3. Test elastomeric joint sealants according to SWRI's Sealant Validation Program for compliance with requirements specified by reference to ASTM C 920 for adhesion and cohesion under cyclic movement, adhesion-in-peel, and indentation hardness.
4. Test other joint sealants for compliance with requirements indicated by referencing standard specifications and test methods.

1.5 QUALIFICATIONS

A. Manufacturer: Company specializing in manufacturing products specified in this section with minimum three years documented experience.

B. Applicator: Company specializing in performing Work of this section with minimum three years documented experience. Approved by Manufacturer, if required by warranty.

1. Qualifications data: For firms and persons to demonstrate their capabilities and experience. Include lists of complete projects with names and addresses, and name and addresses of architects and owners.

1.6 DELIVERY, STORAGE, AND HANDLING

A. Section 01600 - Product Requirements: Product storage and handling requirements.

B. Deliver materials and products to Project site in original, unopened containers or packages with intact and legible Manufacturers' labels identifying product and Manufacturer, date of manufacture, lot number, shelf life if applicable, qualified testing and inspecting agency's classification marking applicable to Project, curing time, and mixing instructions for multi-component materials.

C. Store and handle materials in compliance with Manufacturers written instructions to prevent their deterioration or damage due to moisture, temperature changes, contaminants, or other causes.

1.7 MOCKUP

A. Section 01400 - Quality Requirements: Requirements for mockup.

B. Construct mockup of sealant joints in conjunction with wall mockups specified in other sections.

C. Construct mockup with specified sealant types and with other components noted.
1. Determine preparation and priming requirements based on Manufacturers recommendations; take action necessary for correction of failure of sealant tests on mock-up.
2. Verify sealants, primers, and other components do not stain adjacent materials.

D. Locate where directed by Architect/Engineer.

E. Incorporate accepted mockup as part of Work.

1.8 ENVIRONMENTAL REQUIREMENTS

A. Section 01600 - Products Requirements.

B. Maintain temperature and humidity recommended by sealant Manufacturer during and after installation.

C. Do not proceed with installation of joint sealants under the following conditions:
1. When ambient and substrate temperature conditions are outside limits permitted by joint-sealant Manufacturer or are below 40 deg F.
2. When joint substrates are wet.
3. Where joint widths are less than those allowed by joint-sealant Manufacturer for applications indicated.
4. Contaminants capable of interfering with adhesion have not yet been removed from joint substrates.

1.9 COORDINATION

A. Section 01300 - Administrative Requirements: Coordination and project conditions.

B. Coordinate Work with sections referencing this section.

1.10 WARRANTY

A. Special Installer's Warranty: Installer's standard form in which Installer agrees to repair or replace elastomeric joint sealants that do not comply with performance and other requirements specified in this Section within specified warranty period.
   1. Warranty Period: Two years from date of Substantial Completion.

B. Special Manufacturer's Warranty: Manufacturer's standard form in which elastomeric sealant Manufacturer agrees to furnish elastomeric joint sealants to repair or replace those that do not comply with performance and other requirements specified in this Section within specified warranty period.
   1. Warranty Period: Ten years from date of Substantial Completion.

C. Special warranties specified in this Article exclude deterioration or failure of elastomeric joint sealants from the following:
   1. Movement of the structure resulting in stresses on the sealant exceeding sealant Manufacturer's written specifications for sealant elongation and compression caused by structural settlement or errors attributable to design or construction.
   2. Disintegration of joint substrates from natural causes exceeding design specifications.
   3. Mechanical damage caused by individuals, tools, or other outside agents.
   4. Changes in sealant appearance caused by accumulation of dirt or other atmospheric contaminants.

PART 2 - PRODUCTS

2.1 JOINT SEALERS

A. Manufacturers:
   1. Sonneborn Building Products
   2. Pecora Corp.
   3. Tremco Sealant / Weatherproofing Division
   4. Substitutions: Section 01600 - Products Requirements.

2.2 MATERIALS, GENERAL

A. Compatibility: Provide joint sealants, backings, and other related materials that are compatible with one another and with joint substrates under conditions of service and application, as demonstrated by sealant Manufacturer, based on testing and field experience.

B. Colors of Exposed Joint Sealants: As selected by Architect from Manufacturer’s full range.

C. Products Description: Sealant Type ___

   1. High Performance General Purpose Exterior (Nontraffic) Sealant: Polyurethane; ASTM C920, Grade NS, Class 25, Uses M, G, and A; single component.

a. Type: Sonolastic NP1 manufactured by Sonneborn.
b. Color: Standard colors matching finished surfaces.
c. Applications: Use for:
    1) Control, expansion, and soft joints in masonry
    2) Joints between concrete and other materials
    3) Joints between metal frames and other materials
    4) Other exterior nontraffic joints for which no other sealant is indicated.

2. General Purpose Traffic Bearing Sealant Polyurethane; ASTM C920, Grade P, Class 25, Use T; multi- component.
    a. Type: Sonolastic SL2 manufactured by Sonneborn
    b. Color: Standard colors matching finished surfaces
    c. Applications: Use for exterior and interior pedestrian and vehicular traffic bearing joints.
3. Exterior Foam Expansion Joint Sealer: Precompressed foam sealer; Polyurethane with water-repellent; products recommended by Manufacturer for traffic-bearing use.
    a. Type: Expansion-Joint Filler manufactured by Sonneborn
    b. Color: Face color as selected
    c. Size: As required to provide weathertight seal when installed
    d. Applications: Use for exterior wall expansion joints and parking deck expansion joints.
4. Exterior Metal Lap Joint Sealant: Butyl or polyisobutylene, non-drying, non-skinning, non-curing.
    a. Type: BC-158 manufactured by Pecora Corporation
    b. Applications: Use for concealed sealant bead in sheet metal work and concealed sealant bead in siding overlaps.
5. General Purpose Interior Sealant: Acrylic emulsion latex; ASTM C834, single component, paintable.
    a. Type: Sonolac manufactured by Sonneborn
    b. Color: Standard colors matching finished surfaces
    c. Applications: Use for interior wall and ceiling control joints, joints between door and window frames and wall surfaces, and other interior joints for which no other type of sealant is indicated.:
6. Mildew-resistant Sealant: One-part acetoxy silicone; ASTM C920, Uses G and A; single component, mildew resistant.
    a. Type: Omniplus manufactured by Sonneborn
    b. Applications: Use for joints between plumbing fixtures and floor and wall surfaces, and joints between break room and toilet room counter tops and wall surfaces.
7. Acoustical Sealant: Acrylic sealant; ASTM C920, Grade NS, Class 12-1/2, Uses M and A; single component, solvent release curing, non-skinning.
    a. Type: Tremflex manufactured by Tremco
    b. Applications: Use for concealed locations only at acoustically rated construction.
        1) Provide sealant bead between top stud runner and structure and between bottom stud track and floor.

2.3 ACCESSORIES

A. Primer: Non-staining type, recommended by sealant Manufacturer to suit application.

B. Joint Cleaner: Non-corrosive and non-staining type, recommended by sealant Manufacturer; compatible with joint forming materials.

C. Joint Backing: Round foam rod compatible with sealant; ASTM C 1330, closed cell PVC; oversized 30 to 50 percent larger than joint width.
   1. Type: Closed Cell backer rod manufactured by Sonneborn
   2. Type: Green Rod manufactured by Nomaco, Inc.

D. Bond Breaker: Pressure sensitive tape recommended by sealant Manufacturer to suit application.

E. Acoustical Tape: Premolded, closed cell PVC Foam Strip; Armaflex Insulation Tape manufactured by Armstrong.

PART 3 - EXECUTION

3.1 EXAMINATION

A. Section 01300 - Administrative Requirements: Coordination and project conditions.

B. Verify substrate surfaces and joint openings are ready to receive work.

C. Verify joint backing and release tapes are compatible with sealant.

D. Examine joints indicated to receive joint sealants, with Installer present, for compliance with requirements for joint configuration, installation tolerances, and other conditions affecting joint-sealant performance.
   1. Proceed with installation only after unsatisfactory conditions have been corrected.

3.2 PREPARATION

A. Remove loose materials and foreign matter impairing adhesion of sealant.

B. Clean and prime joints.

C. Perform preparation in accordance with ASTM C1193.

D. Protect elements surrounding Work of this section from damage or disfiguration.

3.3 INSTALLATION

A. Perform installation in accordance with ASTM C1193.

B. Perform acoustical sealant application work in accordance with ASTM C919.

C. Measure joint dimensions and size joint backers to achieve the following, unless otherwise indicated:
   1. Width/depth ratio of 2: 1
   2. Neck dimension no greater than 1/3 of joint width
   3. Surface bond area on each side not less than 75 percent of joint width.

D. Install bond breaker where joint backing is not used.

E. Install sealant free of air pockets, foreign embedded matter, ridges, and sags.

F. Apply sealant within recommended application temperature ranges. Consult Manufacturer when sealant cannot be applied within these temperature ranges.

G. Tool joints concave, slightly below adjoining surfaces. Where horizontal joints are between a horizontal surface and vertical surface, fill joint to form a slight convex (cove), so that joint will not trap water or dirt.

H. Install sealants with complete 'wetting' of joint bonding surfaces equally on opposite sides.

I. Precompressed Foam Sealant: Do not stretch; avoid joints except at corners, ends, and intersections; install with face 1/8 to ¼ inch below adjoining surface.

J. Compression Gaskets: Avoid joints except at ends, corners, and intersections; seal joints with adhesive; install with face 1/8 to ¼ inch below adjoining surface.

3.4 CLEANING

A. Section 01700 - Execution Requirements: Final cleaning.

B. Clean adjacent soiled surfaces.

3.5 PROTECTION OF INSTALLED CONSTRUCTION

A. Section 01700 - Execution Requirements: Protecting installed construction.

B. Protect sealants until cured.

3.6 SCHEDULE

A. Exterior Joints for Which No Other Sealant Type is Indicated: Type1.

B. Control and Expansion Joints in Paving: Type 2.

C. Joints between Concrete Panels and Between Panels and Adjacent Work: Type 1.

D. Control, Expansion, and Soft Joints in Masonry, and Between Masonry and Adjacent Work: Type 1.

E. Lap Joints in Exterior Sheet Metal Work: Type 4.

F. Butt Joints in Exterior Metal Work and Siding: Type 1.

G. Joints between Exterior Metal Frames and Adjacent Work (except masonry): Type 1.

H. Under Exterior Door Thresholds: Type 4.

I. Interior Joints for Which No Other Sealant is Indicated: Type 5.

J. Control and Expansion Joints in Interior Concrete Slabs and Floors: Type 2.

K. Joints between Plumbing Fixtures and Walls and Floors, and Between Counter tops and Walls: Type 6.

L. In STC-Rated Walls, Between Metal Stud Track/Runner and Adjacent Construction , Between Outlet Boxes and Gypsum Board: Type 7.

END OF SECTION

SECTION 08110
STANDARD STEEL DOORS

PART 1 - GENERAL

1.1 SUMMARY

A. Section includes non-rated, rated and thermally insulated steel doors.

B. Related Sections:
1. Section 04065 – Masonry Mortar and Grout
2. Section 05500 – Steel Lintels
3. Section 08710 – Finish Hardware
4. Section 08800 - Glazing: Glass for doors
5. Section 09900 - Painting and Coatings: Field painting of doors.

1.2 REFERENCES

A. American National Standards Institute:
1. ANSI A250.8 - Recommended Specifications for Standard Steel Doors and Frames.

B. ASTM International:
1. ASTM A653/A653M - Standard Specification for Steel Sheet, Zinc-Coated (Galvanized) or Zinc-Iron Alloy-Coated (Galvannealed) by the Hot-Dip Process
2. ASTM C1363 - Standard Test Method for the Thermal Performance of Building Assemblies by Means of a Hot Box Apparatus
3. ASTM E413 - Standard Classification for Rating Sound Insulation.

C. Hollow Metal Manufacturers Association:
1. HMMA 810 - Hollow Metal Doors.

D. National Fire Protection Association:
1. NFPA 80 - Standard for Fire Doors, Fire Windows
2. NFPA 252 - Standard Methods of Fire Tests of Door Assemblies.

E. Steel Door Institute:
1. SDI 108 - Recommended Selection and Usage Guide for Standard Steel Doors.

F. Underwriters Laboratories Inc.:
1. UL 10B - Fire Tests of Door Assemblies.

G. Uniform Building Code:
1. UBC Standard 7-2 - Fire Tests of Door Assemblies.

1.3 SUBMITTALS

A. Section 01330 - Submittal Procedures: Requirements for submittals.

B. Shop Drawings: In addition to requirements below, provide a schedule of standard steel doors and frames using same reference numbers for details and openings as those on Drawings Schedule:
   1. Elevations of each door design
   2. Details of doors, including vertical and horizontal edge details
   3. Frame details for each frame type, including dimensioned profiles
   4. Details and locations of reinforcement and preparations for hardware
   5. Details of each different wall opening condition
   6. Details of anchorages, accessories, joints, and connections
   7. Details of glazing frames and stops showing glazing
   8. Details of conduit and preparations for electrified door hardware and controls.

C. Product Data: Submit door configurations, location of cut-outs for hardware reinforcement. Include construction details, material descriptions, core descriptions, label compliance, fire-resistance rating, and finishes for each type of steel door and frame specified.

D. Oversize Construction Certification: For standard steel door assemblies required to be fire rated and exceeding limitations of labeled assemblies; include statement that doors comply with requirements of design, materials, and construction but have not been subjected to fire test.

E. Qualification Data: For Installer.

F. Samples: Submit two samples of door face metal, 8 x 8 inch in size illustrating shop finish colors and surface texture.

G. Manufacturer's Installation Instructions: Submit special installation instructions.

H. Manufacturer's Certificate: Certify Products meet or exceed specified requirements.

I. Product Test Reports: Based on evaluation of comprehensive fire tests performed by a qualified testing agency, for each type of standard steel door and frame.

1.4 QUALITY ASSURANCE

A. Provide Steel Doors and Frames complying with the Steel Door Institute recommended specifications for Standard Steel Doors and Frames ANSI/SDI 100 (latest edition).

B. Steel Doors and Frames shall be Manufactured to high quality standards in manufacturing facilities with annual certified conformance to ISO9001.

C. Perform Work in accordance with ANSI A250.8.

D. Fire Rated Door Construction: Conform to NFPA 252 or UL 10B.

E. Installed Door Assembly: Conform to NFPA 80 for fire rated class as scheduled.

F. Maintain one copy copies of each document on site.

1.5 QUALIFICATIONS

A. Manufacturer: Company specializing in manufacturing Products specified in this section with minimum three years documented experience.

B. Installer: Company specializing in performing work of this section with minimum three years documented experience and approved by Manufacturer.

1.6 DELIVERY, STORAGE, AND HANDLING

A. Section 01600 - Product Requirements: Requirements for transporting, handling, storing, and protecting products.

B. Doors and frames must be properly marked with door opening mark number to correspond with the schedule.

C. Deliver all steel doors with corrugated edge protection and palletized to provide protection during transit and job storage.

D. Inspect doors and frames upon delivery for damage. Minor damage is to be repaired, provided the repair is equal to new work and acceptable to the architect.

E. Store doors and frames at the job site under cover. Place units on wood sills on the floor in a manner that will prevent rust and damage. Avoid the use of non-vented plastic or canvas shelters, which could create a humidity chamber. If the wrapper on the door becomes wet, remove the carton immediately. Provide a 1/4 inch space between stacked doors to promote air circulation.

F. Accept doors on site in Manufacturer's packaging. Inspect for damage.

G. Break seal on site to permit ventilation.

1.7 COORDINATION

A. Section 01300 - Administrative Requirements: Requirements for coordination.

B. Coordinate Work with door opening construction, door frame, and door hardware installation.

PART 2 - PRODUCTS

2.1 STANDARD STEEL DOORS

A. Manufacturers:
   1. Ceco Door Products Model Medallion, Regent, Imperial door
   2. Republic Builders Products Model DB, DS doors
   3. Steelcraft Model LW18-Series
   4. Curries Door Products

5. Substitutions: Section 01600 - Product Requirements.

B. Product Description:
1. Exterior Doors (Insulated): ANSI A250.8, 1-3/4 inch thick.
   a. Level 2 - Heavy Duty, Model 2, seamless design.
2. Interior Doors (Non-Rated): ANSI A250.8, 1-3/4 inch thick.
   a. Level 2 - Heavy Duty, Model 2, seamless design.
3. Interior Doors (Fire Rated): ANSI A250.8, 1-3/4 inch thick.
   a. Level 2 - Heavy Duty, Model 2, seamless design.

2.2 COMPONENTS

A. Face: Steel sheet in accordance with by referencing ANSI A250.8 for level and model and ANSI A250.4 for physical-endurance level. Door, 18 Gage minimum steel thickness bonded to core.

B. Closure reinforcement: 12 Gage Steel

C. End Channel, 16 Gage Steel end channels, inverted. Plastic fillers are NOT acceptable.

D. Exterior Door Core at Shop / Storage: Vertical steel ribs 22ga. with fiberglass insulation.

E. Exterior Door Core at Office: Thermal Insulated Door, Rigid polystyrene, chemically bonded. Total insulation R-Value of R-9

F. Interior Door Core: Cardboard honeycomb with waterproof, contact adhesive.

G. Handed door.

H. Beveled hinge and lock edges.

I. Hinge channel not less than 14 gage steel for thermal insulated door, 12 gage for rib reinforcement doors.

J. Sound Rated Door: STC of 32, measured in accordance with ASTM E413.

2.3 ACCESSORIES

A. Removable Stops: Rolled steel, channel shape, mitered corners; prepared for countersink style screws. Minimum 0.032 inch thick, fabricated from same material as door face sheet in which they are installed.

B. Primer: ANSI A250.10 rust inhibitive type.

2.4 FABRICATION

A. Fabricate doors with hardware reinforcement welded in place.

B. Attach fire rating label to each fire rated door.

C. Configure exterior doors with edge profile to receive recessed weather stripping.

2.5 SHOP FINISHING

A. Steel Sheet: Galvanized to ASTM A924 A60.

B. Primer: Oven Baked.

PART 3 - EXECUTION

3.1 EXAMINATION

A. Section 01300 - Administrative Requirements: Verification of existing conditions before starting work.

B. Verify opening sizes and tolerances are acceptable.

3.2 INSTALLATION

A. Install doors in accordance with ANSI A250.8.

B. Install door louvers, plumb and level where applicable.

C. Coordinate installation of glass and glazing specified in Section 08800.

D. Coordinate installation of doors with installation of frames specified in Section 08115 and hardware specified in Section 08710.

E. Touch-up damaged shop finishes.

3.3 ERECTION TOLERANCES

A. Section 01400 - Quality Requirements: Tolerances.

B. Maximum Diagonal Distortion: 1/16 inch measured with straight edge, corner to corner.

3.4 ADJUSTING

A. Section 01700 - Execution Requirements: Requirements for adjusting.

B. Adjust door for smooth and balanced door movement.

3.5 SCHEDULE

A. Refer to Door and Frame Schedule on drawings.

END OF SECTION

SECTION 08115
STANDARD STEEL FRAMES

PART 1 - GENERAL

1.1 SUMMARY

A. Section includes fire-rated and non-rated steel frames.

B. Related Sections:
1. Section 03300 - Cast-In-Place Concrete: Placement of anchors into masonry wall construction]
2. Section 04820 – Reinforced Unit Masonry Assemblies: Masonry grout fill of metal frames and placement of anchors into masonry wall construction
3. Section 08114 - Standard Steel Doors
4. Section 08710 - Door Hardware: Hardware, silencers, and weather-stripping
5. Section 08800 - Glazing.

1.2 REFERENCES

A. American National Standards Institute:
1. ANSI A250.8 - Recommended Specifications for Standard Steel Doors and Frames.

B. ASTM International:
1. ASTM A591/A591M - Standard Specification for Steel Sheet, Electrolytic Zinc-Coated, for Light Coating Mass Applications
2. ASTM A653/A653M - Standard Specification for Steel Sheet, Zinc-Coated (Galvanized) or Zinc-Iron Alloy-Coated (Galvannealed) by the Hot-Dip Process.

C. National Fire Protection Association:
1. NFPA 80 - Standard for Fire Doors, Fire Windows
2. NFPA 252 - Standard Methods of Fire Tests of Door Assemblies.

D. Underwriters Laboratories Inc.:
1. UL 10B - Fire Tests of Door Assemblies.

E. Uniform Building Code:
1. UBC Standard 7-2 - Fire Tests of Door Assemblies.

1.3 SUBMITTALS

A. Section 01330 - Submittal Procedures: Submittal procedures.

B. Shop Drawings: Indicate frame elevations, reinforcement, anchor types and spacing, location of cut-outs for hardware, and finish.
1. Elevations of each frame design
2. Details of frame, including vertical and horizontal edge details

3. Details and locations of reinforcement and preparations for hardware
4. Details of each different wall opening condition
5. Details of anchorages, accessories, joints, and connections
6. Details of conduit and preparations for electrified door hardware and controls.

C. Product Data: Submit frame configuration and finishes. Include construction details, material descriptions, label compliance, fire-resistance rating, and finishes for each type of frame specified.

D. Samples: Submit two samples of frame, 8” x 8” inch in size illustrating factory finished frame colors and surface texture.

E. Manufacturer's Installation Instructions: Submit special installation instructions.

F. Manufacturer's Certificate: Certify products meet or exceed specified requirements.

G. Qualification Data: For Installer.

H. Product Test Reports: Based on evaluation of comprehensive fire tests performed by a qualified testing agency, for each type of standard steel door and frame.

1.4 QUALITY ASSURANCE

A. Conform to requirements of ANSI A250.8.

B. Fire Rated Frame Construction: Conform to UL 10B.

C. Installed Frame Assembly: Conform to NFPA 80 for fire rated class same as fire door.

D. Maintain one copy of each document on site.

1.5 QUALIFICATIONS

A. Manufacturer: Company specializing in manufacturing products specified in this section with minimum three years documented experience.

1.6 DELIVERY, STORAGE, AND HANDLING

A. Section 01600 - Product Requirements: Product storage and handling requirements.

B. Accept frames on site in Manufacturer's packaging. Inspect for damage.

C. Break seal on-site to permit ventilation.

1.7 COORDINATION

A. Section 01300 - Administrative Requirements: Coordination and project conditions.

B. Coordinate Work with frame opening construction, door, and hardware installation.

C. Sequence installation to accommodate required door hardware electric wire connections.

PART 2 - PRODUCTS

2.1 STANDARD STEEL FRAMES

A. Manufacturers:
1. Ceco Door Products Model
2. Republic Builders Products Model
3. Steelcraft Model
4. Curries Door Products
5. Substitutions: Section 01600 - Product Requirements.

B. Product Description: Standard shop fabricated steel frames, fire rated and non-rated types. To suit ANSI A250.8 Grade and Model of door specified

1. Exterior Frames:
   a. Level 2 for Door Models; Fully Welded, nominal 14 gage thick material, base metal thickness
   b. Kerfed frame with integral weather stripping
2. Interior Frames:
   a. Level 2 for Door Models; Fully Welded, nominal 14 gage inch thick material, base metal thickness.

2.2 ACCESSORIES

A. Bituminous Coating: Non-asbestos fibered asphalt emulsion.

B. Primer: ANSI A250.10 rust inhibitive type.

C. Silencers: Specified in Section 08710. Resilient rubber set in fitted into drilled hole.

D. Weather stripping: Specified in Section 08710. Resilient rubber set in steel retainer.

2.3 FABRICATION

A. Fabricate frames as fully welded unit.
1. Fabricate frames with mitered or coped and welded face corners and seamless face joints.

B. Fabricate frames with hardware reinforcement plates welded in place. Provide mortar guard boxes.

C. Reinforce frames wider than 48 inches with roll formed steel channels fitted tightly into frame head, flush with top.

D. Prepare frames for silencers. Provide three single silencers for single doors on strike side. Provide two single silencers on frame head at double doors without mullions.

E. Configure exterior frames with special profile to receive recessed weather stripping.

F. Attach fire rated label to each fire rated frame.

G. Fabricate frames to suit masonry wall coursing with 2 inch head member.

2.4 SHOP FINISHING

A. Steel Sheet: Galvanized to ASTM A653/A653M G60.

B. Primer: Baked.

C. Coat inside of frame profile with bituminous coating to minimum thickness of 1/16 inch.

PART 3 - EXECUTION

3.1 EXAMINATION

A. Section 01300 - Administrative Requirements: Coordination and project conditions.

B. Verify opening sizes and tolerances are acceptable.

3.2 INSTALLATION

A. Install frames in accordance with ANSI A250.8.

B. Coordinate with masonry and gypsum board wall construction for anchor placement.

C. Coordinate installation of glass and glazing specified in Section 08800.

D. Coordinate installation of frames with installation of hardware specified in Section 08710 and doors in Section 08110.

E. Install roll formed steel reinforcement channels between two abutting frames. Anchor to structure and floor.

3.3 ERECTION TOLERANCES

A. Section 01400 - Quality Requirements: Tolerances.

B. Maximum Diagonal Distortion: 1/16 measured with straight edges, crossed corner to corner.

3.4 SCHEDULE

A. Refer to Door and Frame Schedule on drawings.

END OF SECTION

SECTION 08212
FLUSH WOOD DOORS

PART 1 - GENERAL

1.1 SUMMARY

A. Section includes flush wood doors, fire rated and non-rated.

B. Related Sections:

1. Section 06200 - Finish Carpentry: Wood door frames
2. Section 08115 - Standard Steel Frames
3. Section 08710 - Door Hardware
4. Section 08800 - Glazing
5. Section 09900 - Painting and Coatings: Site finishing of wood doors.

1.2 REFERENCES

A. American National Standards Institute:
1. ANSI A135.4 - Basic Hardboard.

B. ASTM International:
1. ASTM E413 - Standard Classification for Rating Sound Insulation.

C. Architectural Woodwork Institute:
1. AWI - Quality Standards Illustrated.

D. Hardwood Plywood and Veneer Association:
1. HPVA HP-1 - American National Standard for Hardwood and Decorative Plywood.

E. National Fire Protection Association:
1. NFPA 80 - Standard for Fire Doors, Fire Windows
2. NFPA 252 - Standard Methods of Fire Tests of Door Assemblies.

F. Underwriters Laboratories Inc.:
1. UL 10B - Fire Tests of Door Assemblies
2. UL - Building Materials Directory.

G. Uniform Building Code:
1. UBC Standard 7-2 - Fire Tests of Door Assemblies.

H. Intertek Testing Services (Warnock Hersey Listed):
1. WH - Certification Listings.

1.3 SUBMITTALS

A. Section 01330 - Submittal Procedures: Submittal procedures.

B. Shop Drawings: Illustrate door opening criteria, elevations, sizes, types, swings, undercuts required, special blocking for hardware, identify cutouts for glazing.
1. Indicate dimensions and locations of mortises and holes for hardware.
2. Indicate dimensions and locations of cutouts.
3. Indicate requirements for veneer matching.
4. Indicate doors to be factory finished and finish requirements.
5. Indicate fire ratings for fire doors.

C. Product Data: Submit information on door core materials and construction, and on veneer species, type and characteristics.

D. Samples:
1. Submit two samples of door construction, 8 x 10 inch in size cut from bottom corner of door.
2. Submit two samples of door veneer, 8 x 10 inch in size illustrating wood grain, stain color, and sheen.

E. Manufacturer's Installation Instructions: Submit special installation instructions.

1.4 QUALITY ASSURANCE

A. Perform Work in accordance with AWI Quality Standard Section 1300, Custom Grade.

B. Finish doors in accordance with AWI Quality Standard Section 1500.

C. Fire Door Construction: Conform to NFPA 252 and UL 10B.

D. Installed Fire Rated Door Assembly: Conform to NFPA 80 for fire rated class as scheduled.

E. Maintain one copy of each document on site.

1.5 QUALIFICATIONS

A. Manufacturer: Company specializing in manufacturing products specified in this section with minimum three years documented experience.

B. Installer: Company specializing in performing work of this section with minimum three years documented experience and approved by Manufacturer.

1.6 DELIVERY, STORAGE, AND HANDLING

A. Section 01600 - Product Requirements: Product storage and handling requirements.

B. Package, deliver and store doors in accordance with AWI Section 1300.

C. Protect doors with resilient packaging sealed with heat shrunk plastic. Do not store in damp or wet areas; or in areas where sunlight might bleach veneer. Seal top and bottom edges with tinted sealer when stored more than one week.
   1. Break seal on site to permit ventilation.

1.7 COORDINATION

A. Section 01300 - Administrative Requirements: Coordination and project conditions.

B. Coordinate Work with door opening construction, door frame and door hardware installation.

1.8 WARRANTY

A. Section 01700 - Execution Requirements: Product warranties and product bonds.

B. Include coverage for delamination of veneer, warping beyond specified installation tolerances, defective materials, and telegraphing core construction.

C. Furnish Manufacturer's "Life of Installation" warranty for interior doors.

D. Manufacturer's Warranty: Provide for replacing including cost of re-hanging and refinishing at no cost to Owner, wood doors exhibiting defects in materials or workmanship including warp and de-lamination for life of original installation.

PART 2 - PRODUCTS

2.1 FLUSH WOOD DOORS

A. Manufacturers:
   1. Algoma Hardwoods Inc. Model Flush Wood Door
   2. Eggers Industries Model 5-Ply Flush Doors
   3. Buell Door Company Model Hardwood Veneer Doors
   4. Industrial Mohawk Flush Doors, Inc. Mode 5-Ply
   5. Substitutions: Section 01600 - Product Requirements.

B. Product Description: Solid core flush wood doors; red oak, wood veneer facing material; fire rated and non-rated types; flush glazed design; site finished; wood doors.
   1. Flush Interior Doors: 1-3/4 inches thick; solid core, five-ply construction, fire rated as indicated on Drawings; stain grade.

2.2 COMPONENTS

A. Solid Core, Non-Rated: AWI Section 1300, Type SCL Structural Composite Lumber.

B. Solid Core, Fire Rated: AWI Section 1300, Type FD 1/3.

C. Blocking: Provide wood blocking in doors as follows:

1. 5-inch top-rail blocking, in doors indicated to have closers.
2. 5-inch bottom-rail blocking, in doors indicated to have kick, mop, or armor plates.
3. 5-inch midrail blocking, in doors indicated to have exit devices.

D. Interior Veneer Facing: AWI Custom quality wood, plain sliced, with balanced match end matched grain, for transparent finish.
   1. Wood: Red Oak As indicated in Schedule.

E. Cross Banding Behind Laminate Finish: 2-ply; Manufacturer's standard construction.

F. Facing Adhesive: Type I – waterproof or II - water resistant, Manufacturers' standard construction; formaldehyde free.

2.3 ACCESSORIES

A. Glazing Stops: Wood, of same species as door facing with Wood with metal clips for rated doors. Aluminum channel shape, mitered corners; prepared for countersink style screws.

2.4 FABRICATION

A. Fabricate non-rated doors in accordance with AWI Quality Standards requirements.

B. Fabricate fire rated doors in accordance with AWI Quality Standards and to UL requirements. Attach fire rating label to door.

C. Furnish lock blocks at lock edge and top of door for closer for hardware reinforcement.

D. Vertical Exposed Edge of Stiles: Of same species as veneer facing. Hardwood for transparent finish

E. Fit door edge trim to edge of stiles after applying veneer facing.

F. Bond edge banding to cores.

G. Factory machine doors for finish hardware in accordance with hardware requirements and dimensions. Do not machine for surface hardware. Furnish solid blocking for through bolted hardware.

H. Factory fit doors for frame opening dimensions identified on shop drawings.

I. Provide edge clearances in accordance with AWI 1300.

PART 3 - EXECUTION

3.1 EXAMINATION

A. Section 01300 - Administrative Requirements: Coordination and project conditions.

B. Verify opening sizes and tolerances are acceptable.

C. Do not install doors in frame openings that are not plumb or are out-of-tolerance for size or alignment.

3.2 INSTALLATION

A. Install fire rated and non-rated doors in accordance with AWI Quality Standard, NFPA 80, and to requirements for fire rating label by UL.

B. Trim non-rated door width by cutting equally on both jamb edges.

C. Trim door height by cutting bottom edges to maximum of 3/4 inch.
1. Trim fire door height at bottom edge only, in accordance with fire rating requirements.

D. Machine cut doors for hardware installation.

E. Coordinate installation of doors with installation of frames specified in Section 08115 and hardware specified in Section 08710.

F. Install door louvers plumb and level.

G. Coordinate installation of glass and glazing specified in Section 08800.

H. Site finish doors in accordance with Section 09900. Door, frame, and trim finish shall match.

3.3 INSTALLATION TOLERANCES

A. Section 01400 - Quality Requirements: Tolerances.

B. Conform to AWI requirements for fit and clearance tolerances.

C. Conform to AWI Section 1300 requirements for maximum diagonal distortion.

3.4 ADJUSTING

A. Section 01700 - Execution Requirements: Testing, adjusting, and balancing.

B. Adjust door for smooth and balanced door movement.

C. Adjust closer for full closure.

3.5 SCHEDULE

A. Reference floor plans, elevations and sections for door locations and door and frame schedule and door types for door sizes, construction and features.

END OF SECTION

SECTION 08310
ACCESS DOORS AND PANELS

PART 1 - GENERAL

1.1 SUMMARY

A. Section includes fire resistive rated and non-rated access doors and panels with frames.
   1. Provide for access to controls, valves, traps, dampers, cleanouts, and similar items requiring operation behind inaccessible finished surfaces.
   2. Coordinate exact locations with various trades to assure proper placement of access doors and panels.
   3. Located at each above ceiling mechanical unit at filter location.

B. Related Sections:
   1. Section 09900 - Paints and Coatings: Field paint finish
   2. Section 15820 - Duct Accessories: Access doors in ductwork.

1.2 REFERENCES

A. National Fire Protection Association:
   1. NFPA 80 - Standard for Fire Doors, Fire Windows.

B. Underwriters Laboratories Inc.:
   1. UL - Building Materials Directory.

C. Intertek Testing Services (Warnock Hersey Listed):
   1. WH - Certification Listings.

1.3 SUBMITTALS

A. Section 01330 - Submittal Procedures: Submittal procedures.

B. Shop Drawings: Indicate exact position of access door units.

C. Product Data: Submit literature indicating sizes, types, finishes, hardware, scheduled locations, fire resistance listings, and details of adjoining Work.

D. Samples: Submit one illustrating frame configuration and anchors.

E. Manufacturer's Installation Instructions: Submit installation requirements and rough-in dimensions.

1.4 CLOSEOUT SUBMITTALS

A. Section 01700 - Execution Requirements: Closeout procedures.

B. Project Record Documents: Record actual locations of access units.

1.5 QUALITY ASSURANCE

A. Fire Resistance Ratings: Where indicated as fire rated, provide assemblies from Manufacturers listed in UL Directory or Intertek Testing Services (Warnock Hersey Listed) Directory.

1.6 QUALIFICATIONS

A. Manufacturer: Company specializing in manufacturing products specified with minimum three years documented experience.

1.7 COORDINATION

A. Coordinate Work under provisions of Section 01311 - Project Coordination.

B. Coordinate Work with work requiring controls, valves, traps, dampers, cleanouts, and similar items requiring operation being located behind finished surfaces.

PART 2 - PRODUCTS

2.1 ACCESS DOORS AND PANELS

A. Manufacturers:
1. J. L. Industries
2. Larsen's Manufacturing Company
3. Milcor LTD, Partnership.
4. Substitutions: Section 01600 - Product Requirements.

B. Flush Framed Access Doors: Frames and nominal 1 inch wide exposed flanges of 16 gage steel and door panels of 14 gage steel.

C. Gypsum Board Access Doors: Frames and nominal 1 inch wide flanges of 16 gage steel and door panels of 14 gage steel. Design flanges to be concealed by gypsum board joint finishing compound specified in Section 09260.

D. Fire Rated Access Doors: Frames and nominal 1 inch wide exposed flanges of minimum 16 gage steel and door panels of 20 gage steel. Provide self closing and latching doors with keyed lock to match cylinders specified in Section 08710. Attach label to fire rated doors for rating indicated.

E. Acoustical Tile Ceilings: Fabricated for use in acoustical tile ceilings. The steel door is recessed 5/8” to receive acoustical tile.

2.2 FABRICATION

A. Fabricate units of continuous welded construction; weld, fill, and grind joints to assure flush and square unit.

B. Wall and Ceiling Access Door and Panel Hardware:
   1. Hinge: Standard continuous, 175 degree steel hinges
   2. Lock: Self-latching lock. Screw driver slot for quarter turn cam lock.

C. Size Variations: Obtain acceptance of Manufacturer’s standard size units which vary slightly from sizes shown or scheduled.

2.3 SHOP FINISHING

A. Base Metal Protection: Galvanized, hot dipped finish. Prime coat units with baked on primer.

B. Finish: Two coats baked enamel, color as selected.

PART 3 - EXECUTION

3.1 EXAMINATION

A. Section 01300 - Administrative Requirements: Coordination and project conditions.

B. Verify rough openings for access doors and panels are correctly sized and located.

3.2 INSTALLATION

A. Comply with Manufacturer's written instructions for installing access doors and frames.

B. Secure frames rigidly in place, plumb and level in opening, with plane of door and panel face aligned with adjacent finished surfaces.
   1. Set concealed frame type units flush with adjacent finished surfaces.

C. Position unit to provide convenient access to concealed work requiring access.

D. Install fire rated units in accordance with NFPA 80 and requirements for fire listing.

3.3 ADJUSTING AND CLEANING

A. Adjust doors and hardware after installation for proper operation.

B. Remove and replace doors and frames that are warped, bowed, or otherwise damaged.

END OF SECTION

SECTION 08333
OVERHEAD COILING DOORS

PART 1 - GENERAL

1.1 SUMMARY

A. Section includes overhead coiling door, operating hardware, manual operation.

B. Related Sections:
1. Section 05500 - Metal Fabrications: Support framing
2. Section 08710 - Door Hardware: Product Requirements for cylinder core and keys for placement by this section
3. Section 09900 - Paints and Coatings: Field paint finish.

1.2 REFERENCES

A. ASTM International:
1. ASTM A653/A653M - Standard Specification for Steel Sheet, Zinc-Coated (Galvanized) or Zinc-Iron Alloy-Coated (Galvannealed) by the Hot-Dip Process
2. ASTM A924/A924M - Standard Specification for General Requirements for Steel Sheet, Metallic-Coated by the Hot-Dip Process
3. ASTM B221 - Standard Specification for Aluminum and Aluminum-Alloy Extruded Bars, Rods, Wire, Profiles, and Tubes.

B. National Fire Protection Association:
1. NFPA 80 - Standard for Fire Doors, Fire Windows.

C. Underwriters Laboratories Inc.:
1. UL 325 - Door, Drapery, Gate, Louver, and Window Operators and Systems.
2. UL - Building Materials Directory.

D. Intertek Testing Services (Warnock Hersey Listed):
1. WH - Certification Listings.

1.3 SYSTEM DESCRIPTION

A. Manual Operation: Manual hand chain lift unit with overhead counter balance device, requiring 25 lb nominal force to operate.

1.4 DESIGN REQUIREMENTS

A. Wind Loads: Design door assembly to withstand wind/suction load of 20 psf, with maximum deflection of 1/120, and without damage to door or assembly components.
1. Design per local code requirements for wind loads.

B. Impact Test for Flying Debris: Comply with ASTM E 1996, tested according to ASTM E 1886.

1. Level of Protection: Enhanced Protection.
2. Wind Zone One: 120 mph, pressure test to 3/4 and 1-1/2 x design pressure (positive and negative).

C. Operation: Design door assembly, including operator, to operate for not less than 20,000 cycles.

1.5 SUBMITTALS

A. Section 01330 - Submittal Procedures: Submittal procedures.

B. Shop Drawings: Indicate pertinent dimensioning, anchorage methods, hardware locations, and installation details.
1. Summary of forces and loads on walls and jambs.

C. Product Data: Submit general construction, component connections and details.

D. Samples: Submit two door slats, 12 x 12 inch in size illustrating shape, color and finish texture.

E. Manufacturer's Installation Instructions: Indicate installation sequence and procedures, and adjustment and alignment procedures.

F. Qualification Data: For Installer.

1.6 CLOSEOUT SUBMITTALS

A. Section 01700 - Execution Requirements: Closeout procedures.

B. Operation and Maintenance Data: Submit lubrication requirements and frequency, and periodic adjustments required.

1.7 QUALITY ASSURANCE

A. Manufacturer: Rolling doors shall be manufactured by a firm with a minimum of five years experience in the fabrication and installation of rolling doors.

B. Installer: Company specializing in performing Work of this section with minimum five years documented experience, trained and approved by manufacturer.

C. Single Source Responsibility: Provide doors, guides, motors, and relate primary components form one manufacturer for each type of door.

D. Pre-Installation Conference: Schedule and convene a pre-installation conference prior to commencement of installation. Establish procedures to maintain optimum working conditions and to coordinate this work with related and adjacent work.

1.8 DELIVERY, STORAGE, AND HANDLING

A. Section 01600 - Product Requirements: Product storage and handling requirements.

1.9 WARRANTY

A. Manufacturers' Standard warranty.

PART 2 - PRODUCTS

2.1 OVERHEAD COILING DOORS

A. Manufacturers:
1. Alpine Overhead Doors, Inc., Model Redi-Storm IMB
2. Cookson Co. Model Type JCWI
3. Cornell Iron Works, Inc. Model ESD20
4. Overhead Door Corporation, Model StormTite 625 Series
5. Raynor Garage Door Model DuraCoil Standard
6. Winsor Door Model SFWI
7. Mahon Door Corp.
8. Substitutions: Section 01600 - Product Requirements.

B. Product Description:
1. Manual Operation: Manual hand chain lift unit with overhead counter balance device, requiring 25 lb nominal force to operate.

2.2 COMPONENTS

A. Curtain: Conform to following; scheduled indicated on Drawings:

1. Steel Slats: Interlocking, minimum 20 gage of ASTM A653/A653M steel, minimum galvanized coating designation G90 in accordance with ASTM A924/A924M;.
   a. Type: Flat profile type slat
   b. Sandwich slat construction with manufacturer's CFC-Free foamed-in-place, polyurethane insulation core.
2. Nominal Slat Size: 3 inches wide by required length.
3. Slat Ends: Each slat fitted with end locks to act as wearing surface in guides and to prevent lateral movement.
4. Curtain Bottom: Fitted with galvanized steel angles, channels, or tubes to provide reinforcement and positive contact with floor in closed position.
   a. Astragal: Provide a replaceable, adjustable, continuous, compressible gasket of flexible vinyl, rubber, or neoprene
   b. Locking mechanism.

B. Guides: Minimum 3/16 inch; galvanized steel conforming to ASTM A653/A653M, minimum galvanized coating designation G90 in accordance with ASTM A924/A924M.

1. Furnish continuous angles of profile to retain door in place; mounting brackets of same metal.

C. Roller Shaft Counterbalance: Steel pipe and helical steel spring system, capable of producing torque sufficient to ensure smooth operation of curtain from any position and capable of holding position at mid-travel; with adjustable spring tension.
   1. Standard 100,000 cycle life design
   2. Barrel or pipe; The barrel shall be designed to limit the maximum deflection to .03" per foot of opening width
   3. The springs shall be adjusted by means of an exterior wheel.

D. Hood Enclosure: Round shape, minimum 22 gage galvanized steel; internally reinforced to maintain rigidity and shape. The hood shall contain a waterproof baffle to control air infiltration.

E. Brackets: Manufacturer's standard design, either cast-iron or cold-rolled steel plate bolted to guides for mounting curtain and barrel assembly

F. Hardware:
   1. Locks: Furnish locks to allow doors to be secured.
      a. Manual Doors: Manufacturer's standard cylinder dead lock on inside at door jamb, key operated from exterior and interior.
   2. Cylinders: Minimum six pin cylinders, Furnished under Section 08710 - Door Hardware, installed as part of Work of this section; doors keyed alike.
   3. Handle: Inside side mounted, adjustable keeper, spring activated latch bar with feature to keep in locked or retracted position; interior handle. Hardware: Manufacturer's standard push/pull handles for push-up-operated or emergency operated doors and locking device.

G. Weatherstripping (Exterior Assemblies): Moisture and rot proof, resilient type for complete weathertight installation.
   1. Weatherseals: Replaceable, adjustable, continuous, compressible weather-stripping gaskets fitted to bottom, jambs, and top, and continuous sheet in hood of exterior doors.

H. Thermoset Finish for Steel and Galvanized Steel: Apply Manufacturer's standard baked finish consisting of primer and thermosetting topcoat according to coating Manufacturer's written instructions for cleaning, pretreatment, application, thermosetting, and minimum dry film thickness.
   1. Color to be selected from Manufacturers' standard colors, or color matched to Architect selected color.

I. Chain-Hoist Operator: Provide manual chain-hoist operator consisting of endless steel hand chain, chain pocket wheel and guard, and gear-reduction unit with a maximum 25-lbf effort for door operation. Provide alloy steel hand chain with chain holder secured to operator guide

J. Locking Mechanisms: The chain shall be secured

K. Vision Lites: (1 1/8” x 7 1/2”) uniformly spaced opening with double Plexiglas® covers.

2.3 SHOP FINISHING

A. Finish: Comply with NAAMM's "Metal Finishes Manual for Architectural and Metal Products" for recommendations for applying and designating finishes.
   1. Surface Preparation: Clean galvanized surfaces with nonpetroleum solvent so surfaces are free of oil and other contaminants.
      a. Pretreat zinc-coated steel, after cleaning, with a conversion coating of type suited to organic coating applied over it.
   2. Apply Manufacturer's standard primer and powder-coat finish to interior- and exterior-door faces and Steel Guides Hood Enclosure after forming, according to coating Manufacturer's written instructions for application, thermosetting, and minimum dry film thickness.
      a. Color and Gloss: As selected by Architect from Manufacturer's full range.

PART 3 - EXECUTION

3.1 EXAMINATION

A. Section 01300 - Administrative Requirements: Coordination and project conditions.

B. Verify opening sizes, tolerances and conditions are acceptable. Take field dimensions and examine conditions of substrates, supports, and other conditions under which this work is to be performed. Do not proceed with work until unsatisfactory conditions are corrected.

3.2 INSTALLATION

A. Installation: Install door and operating equipment complete with necessary hardware, jamb and head mold strips, anchors, inserts, hangers, and equipment supports according to Shop Drawings and Manufacturer's written instructions. Coordinate installation with adjacent work to ensure proper clearances and allow for maintenance.

B. Use anchorage devices to securely fasten assembly to wall construction and building framing without distortion or stress.

C. Securely and rigidly brace components suspended from structure. Secure guides to structural members only.

D. Fit and align assembly including hardware; level and plumb, to provide smooth operation.

E. Coordinate installation of sealants and backing materials at frame perimeter as specified in Section 07900.

F. Install perimeter trim and closures.

G. Instruct Owner's personnel in proper operating procedures and maintenance schedule.

3.3 ERECTION TOLERANCES

A. Section 01400 - Quality Requirements: Tolerances.

B. Maintain dimensional tolerances and alignment with adjacent Work.

C. Maximum Variation From Plumb: 1/16 inch.

D. Maximum Variation From Level: 1/16 inch.

E. Longitudinal or Diagonal Warp: Plus or minus 1/8 inch per 10 ft straight edge.

3.4 ADJUSTING

A. Section 01700 - Execution Requirements: Testing, adjusting, and balancing.

B. Adjust door, hardware and operating assemblies for smooth and noiseless operation.

3.5 CLEANING

A. Section 01700 - Execution Requirements: Final cleaning.

B. Clean door and components.

C. Remove labels and visible markings. Touch-up damaged coatings and finishes and repair minor damage. Clean exposed surfaces using non-abrasive materials and methods recommended by Manufacturer of material or product being cleaned.

END OF SECTION

SECTION 08410
ALUMINUM STOREFRONTS

PART 1 - GENERAL

1.1 SUMMARY

A. Section includes aluminum-framed storefronts including aluminum frames, glass doors including hardware, and glass.

B. Related Sections:
1. Section 07900 - Joint Sealers: System perimeter sealant and back-up materials
2. Section 08800 - Glazing.

1.2 REFERENCES

A. Aluminum Association:
1. AA DAF-45 - Designation System for Aluminum Finishes.

B. American Architectural Manufacturers Association:
1. AAMA 501 - Methods of Test for Exterior Walls
2. AAMA 611 - Voluntary Specification for Anodized Architectural Aluminum
3. AAMA 1503 - Voluntary Test Method for Thermal Transmittance and Condensation Resistance of Windows, Doors and Glazed Wall Sections
4. AAMA 2605 - Voluntary Specification, Performance Requirements and Test Procedures for Superior Performing Organic Coatings on Aluminum Extrusions and Panels
5. AAMA CW-10 - Care and Handling of Architectural Aluminum from Shop to Site
6. AAMA SFM-1 - Aluminum Store Front and Entrance Manual.

C. American Society of Civil Engineers:
1. ASCE 7 - Minimum Design Loads for Buildings and Other Structures.

D. ASTM International:
1. ASTM A36/A36M - Standard Specification for Carbon Structural Steel
2. ASTM A123/A123M - Standard Specification for Zinc (Hot-Dip Galvanized) Coatings on Iron and Steel Products
3. ASTM A653/A653M - Standard Specification for Steel Sheet, Zinc-Coated (Galvanized) or Zinc-Iron Alloy-Coated (Galvannealed) by the Hot-Dip Process
4. ASTM B209 - Standard Specification for Aluminum and Aluminum-Alloy Sheet and Plate
5. ASTM B221 - Standard Specification for Aluminum and Aluminum-Alloy Extruded Bars, Rods, Wire, Profiles, and Tubes
6. ASTM E283 - Standard Test Method for Determining the Rate of Air Leakage Through Exterior Windows, Curtain Walls, and Doors Under Specified Pressure Differences Across the Specimen

7. ASTM E330 - Standard Test Method for Structural Performance of Exterior Windows, Curtain Walls, and Doors By Uniform Static Air Pressure Difference
8. ASTM E331 - Standard Test Method for Water Penetration of Exterior Windows, Curtain Walls, and Doors By Uniform Static Air Pressure Difference
9. ASTM E547 - Standard Test Method for Water Penetration of Exterior Windows, Curtain Walls, and Doors by Cyclic Static Air Pressure Differential.

E. National Fenestration Rating Council Incorporated:
1. NFRC 100 - Procedures for Determining Fenestration Product U-Factors.

F. SSPC: The Society for Protective Coatings:
1. SSPC Paint 20 - Zinc-Rich Primers (Type I - Inorganic and Type II - Organic)
2. SSPC Paint 25 - Red Iron Oxide, Zinc Oxide, Raw Linseed Oil, and Alkyd Primer.

1.3 SYSTEM DESCRIPTION

A. Aluminum-framed storefront system includes tubular aluminum sections with supplementary internal support framing, aluminum and glass entrances, shop fabricated, factory finished, glass and glazing, related flashings, anchorage and attachment devices.

B. System Assembly: Site assembled.

1.4 PERFORMANCE REQUIREMENTS

A. System Design: Design and size components to withstand dead and live loads caused by positive and negative wind pressure acting normal to plane of wall, including building corners.
1. As calculated in accordance with applicable code, as measured in accordance with ASTM E330.

B. Deflection: Limit mullion deflection to 1/175 for spans under 13’-6” and 1/240 plus 1/4 inch for spans over 13’-6”, flexure limit of glass; with full recovery of glazing materials.

C. System Assembly: Accommodate without damage to components or deterioration of seals, movement within system, movement between system and peripheral construction, dynamic loading and release of loads, deflection of structural support framing.

D. Air Infiltration: Limit air leakage through assembly to 0.06 cfm/min/sq ft of wall area, measured at reference differential pressure across assembly of 6.24 psf as measured in accordance with ASTM E283.

E. Air and Vapor Seal: Maintain continuous air barrier and vapor retarder throughout assembly, primarily in line with inside pane of glass and heel bead of glazing compound.

F. Water Resistance Test: Test unit in accordance with ASTM E 331.

G. Vapor Seal: Limit vapor seal with interior atmospheric pressure of 1 inch sp, 72 degrees F , 40 Percent RH without seal failure.

H. Thermal Transmittance of Assembly (Excluding Entrances): Maximum U Value of 0.69 Btu/sq ft per hour per deg F when measured in accordance with [AAMA 1503] [NFRC 100].

I. Expansion / Contraction: Provide for expansion and contraction within system components caused by cycling temperature range of 170 degrees F over 12 hour period without causing detrimental effect to system components and anchorage.

J. System Internal Drainage: Drain water entering joints, condensation occurring in glazing channels, or migrating moisture occurring within system, to exterior by weep drainage network.

1.5 SUBMITTALS

A. Section 01330 - Submittal Procedures: Submittal procedures.

B. Shop Drawings: Indicate system dimensions, framed opening requirements and tolerances, affected related Work and expansion and contraction joint location and details.
   1. For entrances, include hardware schedule and indicate operating hardware types, functions, quantities, and locations.

C. Product Data: Submit component dimensions, describe components within assembly, anchorage and fasteners, glass, door hardware, and internal drainage details.

D. Samples: Submit two samples 12 x 12 inches in size illustrating finished aluminum surface, glass units, and glazing materials.

E. Design Data: Indicate framing member structural and physical characteristics, calculations, dimensional limitations.

F. Manufacturer's Certificate: Certify products meet or exceed specified requirements.

G. Qualification Data: For Installer.

1.6 QUALITY ASSURANCE

A. Perform Work in accordance with AAMA SFM-1 and AAMA MCWM-1 - Metal Curtain Wall, Window, Store Front and Entrance - Guide Specifications Manual.

B. Field Measurements: Verify actual locations of structural supports for aluminum-framed systems by field measurements before fabrication and indicate measurements on Shop Drawings.
   1. Established Dimensions: Where field measurements cannot be made without delaying the Work, establish dimensions and proceed with fabricating aluminum-

framed systems without field measurements. Coordinate construction to ensure that actual dimensions correspond to established dimensions.

C. Maintain one copy copies of each document on site.

1.7 QUALIFICATIONS

A. Manufacturer and Installer: Company specializing in manufacturing aluminum glazing systems with minimum three years documented experience, and with service facilities within 100 miles of Project.

B. Design structural support framing components under direct supervision of Professional Engineer experienced in design of this Work and licensed in State of Texas.

1.8 PRE-INSTALLATION MEETINGS

A. Section 01300 - Administrative Requirements: Pre-installation meeting.

B. Convene minimum two weeks prior to commencing work of this section.

1.9 DELIVERY, STORAGE, AND PROTECTION

A. Section 01600 - Product Requirements: Product storage and handling requirements.

B. Deliver material in Manufacturer's packaging complete with installation instructions.

C. Handle, store and protect pre-finished aluminum components under provisions of Section 01620 and as recommended by Manufacturer.

D. Handle Products of this section in accordance with AAMA MCWM-1 - Curtain Wall Manual #10.

E. Protect finished aluminum surfaces with wrapping. Do not use adhesive papers or sprayed coatings which bond when exposed to sunlight or weather.

1.10 ENVIRONMENTAL REQUIREMENTS

A. Section 01600 - Product Requirements.

B. Do not install sealants or glazing materials when ambient temperature is less than 40 degrees F during and 48 hours after installation.

1.11 COORDINATION

A. Section 01300 - Administrative Requirements: Coordination and project conditions.

B. Coordinate the Work with installation of stud framing work, masonry, glazing and sealant components or materials.

1.12 WARRANTY

A. Section 01700 - Execution Requirements: Product warranties and product bonds.

B. Special Finish Warranty: Manufacturer's standard form in which Manufacturer agrees to repair or replace components on which finishes fail within specified warranty period. Warranty does not include normal weathering.
   1. Warranty Period: 10 years from date of Substantial Completion

C. Furnish five year Manufacturer warranty for glazed units.

PART 2 - PRODUCTS

2.1 ALUMINUM-FRAMED STOREFRONTS

A. Manufacturers:
   1. EFCO Corp. Model System 402
   2. Kawneer Co., Inc. Model Trifab 450 – 2" sightline
   3. Traco Model TR-7850N
   4. Vistawall Architectural Products Model Series 3000 – 2" x 4 ½" mullion profile
   5. Substitutions: Section 01600 - Product Requirements.

B. Product Description:
   1. Aluminum Frame: Non-thermally broken; flush glazing stops; drainage holes; internal weep drainage system.
      a. Depth of frame shall not be less than 4 ½"
      b. Face dimension shall not be less than 2"
      c. Frame components shall be shear block construction.
   2. Glazing: Units shall be dry glazed with EPDM gasket on both exterior and interior.
   3. Mullions: Profile of extruded aluminum with internal reinforcement of aluminum or shaped steel structural section.
   4. Doors: Aluminum framed glass doors; 1-3/4 inches thick, nominal 3 inch wide top rail and vertical stiles, nominal 4 inch wide bottom rail; beveled glazing stops.

2.2 COMPONENTS

A. Extruded Aluminum: ASTM B221; 6063 alloy, T5 temper typical, or T6 temper for extruded structural members.

B. Steel Sections: ASTM A36/A36M; shaped to suit mullion sections, galvanized to G90.

C. Glass: Specified in Section 08800.

D. Glazing Materials: Storefront Manufacturer's standard types to suit application and to achieve weather, moisture, and air infiltration requirements.

E. Hardware: Furnish Manufacturer's standard door hardware for types of doors and applications indicated, and as specified below.
   1. Weather Stripping, Sill Sweep Strips, Pull, Panic Bar, Closer, Deadlock, Weather-Stripping, and Hinges: Manufacturers standard type to suit application.

F. Flashings: Minimum 0.032 inch thick aluminum to match mullion sections where exposed.

G. Firestopping: Specified in Section 07840.

H. Vapor Retarder: Sheet EPDM.

I. Air Barrier: Sheet steel, galvanized.

J. Sealant and Backing Materials:
   1. Sealant Used Within System (Not Used for Glazing): Manufacturer's standard materials to achieve weather, moisture, and air infiltration requirements.
   2. Perimeter Sealant: Specified in Section 07900.

K. Fasteners: Stainless steel, type recommended by Manufacturer to suit application. Exposed fasteners will not be acceptable.

2.3 FABRICATION

A. Fabricate components with minimum clearances and shim spacing around perimeter of assembly, yet enabling installation and dynamic movement of perimeter seal.

B. Accurately fit and secure joints and corners. Make joints flush, hairline, and weatherproof.

C. Prepare components to receive anchor devices. Fabricate anchors.

D. Arrange fasteners and attachments to conceal from view.

E. Prepare components with internal reinforcement for door hardware.

F. Reinforce framing members for imposed loads.

2.4 SHOP FINISHING

A. Clear Anodized Aluminum Surfaces: AAMA 611, AA-M12C22A41 non-specular as fabricated mechanical finish, medium matte chemical finish, and Architectural Class I 0.7 mils clear anodized coating.

B. Concealed Steel Items: Galvanized in accordance with ASTM A123/A123M to thickness Grade 85, 2.0 oz/sq ft.

C. Apply bituminous paint to concealed aluminum and steel surfaces in contact with cementitious or dissimilar metals.

D. Touch-Up Primer for Galvanized Steel Surfaces: SSPC Paint 20 zinc rich.

E. Extent of Finish:
1. Apply factory coating to surfaces exposed at completed assemblies.
2. Apply finish to surfaces cut during fabrication so no natural aluminum is visible in completed assemblies, including joint edges.
3. Apply touch-up materials recommended by coating Manufacturer for field application to cut ends and minor damage to factory applied finish.

PART 3 - EXECUTION

3.1 EXAMINATION

A. Section 01300 - Administrative Requirements: Coordination and project conditions.

B. Verify dimensions, tolerances, and method of attachment with other Work.

C. Verify wall openings and adjoining air and vapor seal materials are ready to receive Work of this Section.

3.2 INSTALLATION

A. Install wall system in accordance with AAMA MCWM-1 - Store Front and Entrance - Guide Specifications Manual.

B. Install wall system in accordance with Manufacturer's recommendations. Ensure assemblies are plumb, level and free of warp or twist. Maintain dimensional tolerances and alignment with adjacent work.

C. Attach to structure to permit sufficient adjustment to accommodate construction tolerances and other irregularities.

D. Provide alignment attachments, anchorage and shims to permanently fasten system to building structure.

E. Align assembly plumb and level, free of warp or twist. Maintain assembly dimensional tolerances, aligning with adjacent Work.

F. Provide thermal isolation where components penetrate or disrupt building insulation.

G. Install sill flashings. Turn up ends and edges; seal to adjacent Work to form water tight dam.

H. Coordinate attachment and seal of perimeter air and vapor barrier materials.

I. Pack fibrous insulation in shim spaces at perimeter of assembly to maintain continuity of thermal barrier.

J. Install integral flashings and integral joint sealers.

K. Set thresholds in full bed of adhesive and secure.

L. Install hardware using templates provided. Refer to Section 08710 for installation requirements.

M. Coordinate installation of glass with Section 08800; separate glass from metal surfaces.

N. Coordinate installation of perimeter sealants with Section 07900.

3.3 ERECTION TOLERANCES

A. Section 01400 - Quality Requirements: Tolerances.

B. Maximum Variation from Plumb: 0.06 inches every 3 ft non-cumulative or 1/16 inches per 10 ft, whichever is less.

C. Maximum Misalignment of Two Adjoining Members Abutting in Plane: 1/32 inch.

3.4 ADJUSTING

A. Section 01700 - Execution Requirements: Testing, adjusting and balancing.

B. Adjust operating hardware for smooth operation.

3.5 CLEANING

A. Section 01700 - Execution Requirements: Final cleaning.

B. Remove protective material from pre-finished aluminum surfaces.

C. Wash down surfaces with solution of mild detergent in warm water, applied with soft, clean wiping cloths. Take care to remove dirt from corners. Wipe surfaces clean.

D. Remove excess sealant by method acceptable to sealant Manufacturer.

3.6 PROTECTION OF INSTALLED CONSTRUCTION

A. Section 01700 - Execution Requirements: Protecting installed construction.

B. Protect finished Work from damage.

END OF SECTION

SECTION 08520
ALUMINUM WINDOWS

PART 1 - GENERAL

1.1 SUMMARY

A. Section includes extruded aluminum windows with fixed and operating sash, factory glazed, operating hardware and, insect screens.

B. Related Sections:
1. Section 05500 - Metal Fabrications: Steel lintels
2. Section 06114 - Wood Blocking and Curbing: Wood perimeter shims
3. Section 07260 - Vapor Retarders: Perimeter vapor seal between window frame and adjacent construction
4. Section 07270 - Air Barriers: Perimeter air seal between window frame and adjacent construction
5. Section 07900 - Joint Sealers: Perimeter sealant and back-up materials
6. Section 08800 - Glazing.

1.2 REFERENCES

A. Aluminum Association:
1. AA DAF-45 - Designation System for Aluminum Finishes.

B. American Architectural Manufacturers Association:
1. AAMA 101 - Voluntary Specifications for Aluminum, Vinyl (PVC) and Wood Windows and Glass Doors
2. AAMA 611 - Voluntary Specification for Anodized Architectural Aluminum
3. AAMA 1503 - Voluntary Test Method for Thermal Transmittance and Condensation Resistance of Windows, Doors and Glazed Wall Sections.

C. American National Standards Institute:
1. ANSI Z97.1 - Safety Glazing Materials Used in Buildings Safety.

D. American Society of Civil Engineers:
1. ASCE 7 - Minimum Design Loads for Buildings and Other Structures.

E. ASTM International:
1. ASTM A123/A123M - Standard Specification for Zinc (Hot-Dip Galvanized) Coatings on Iron and Steel Products
2. ASTM B209 - Standard Specification for Aluminum and Aluminum-Alloy Sheet and Plate
3. ASTM B221 - Standard Specification for Aluminum and Aluminum-Alloy Extruded Bars, Rods, Wire, Profiles, and Tubes
4. ASTM D3656 - Standard Specification for Insect Screening and Louver Cloth Woven from Vinyl-Coated Glass Yarns

5. ASTM E283 - Standard Test Method for Determining the Rate of Air Leakage Through Exterior Windows, Curtain Walls, and Doors Under Specified Pressure Differences Across the Specimen
6. ASTM E330 - Standard Test Method for Structural Performance of Exterior Windows, Curtain Walls, and Doors By Uniform Static Air Pressure Difference
7. ASTM E331 - Standard Test Method for Water Penetration of Exterior Windows, Curtain Walls, and Doors By Uniform Static Air Pressure Difference
8. ASTM E547 - Standard Test Method for Water Penetration of Exterior Windows, Curtain Walls, and Doors by Cyclic Static Air Pressure Differential
9. ASTM E1105 - Standard Test Method for Field Determination of Water Penetration of Installed Exterior Windows, Curtain Walls, and Doors by Uniform or Cyclic Static Air Pressure Difference
10. ASTM F588 - Standard Test Methods for Resistance of Window Assemblies to Forced Entry Excluding Glazing.

F. Glass Association of North America:
1. GANA - Glazing Manual.

G. National Fenestration Rating Council Incorporated:
1. NFRC 100 - Procedures for Determining Fenestration Product U-Factors.

H. SSPC: The Society for Protective Coatings:
1. SSPC Paint 20 - Zinc-Rich Primers (Type I - Inorganic and Type II - Organic)
2. SSPC Paint 25 - Red Iron Oxide, Zinc Oxide, Raw Linseed Oil, and Alkyd Primer.

1.3 SYSTEM DESCRIPTION

A. Windows: Extruded aluminum sections, factory fabricated, factory finished, factory glazed vision glass, related flashings, anchorage and attachment devices.

B. Configuration: Conform to AAMA 101 Designations for windows required for Project; single hung; bottom sash side loads for removal, bevel sash and fixed glazing perimeter.

C. Glazing: Exterior type; 1” inch thick insulating unit tinted glass.

D. Forced Entry Resistance: Conform to ASTM F588 Type A.

1.4 PERFORMANCE REQUIREMENTS

A. Primary Performance Requirements: Aluminum windows to meet performance criteria for AAMA 101 Designation HC40 Heavy Commercial or better.

B. Deflection: Limit member deflection to 1/175 of longer dimension with full recovery of glazing materials. Test shall be conducted pursuant with ASTM E 330.

C. Assembly: To accommodate, without damage to components or deterioration of seals, movement between window and perimeter framing, deflection of lintel.

D. Thermal Transmittance of Assembly: Maximum U Value of .50 Btu/sq ft per hour per deg F when measured in accordance with AAMA 1503.

E. Air Infiltration: Limit air infiltration through assembly to 0.1 cfm/min/sq ft of wall area, measured at reference differential pressure across assembly of 6.24 psf as measured in accordance with ASTM E283.

F. Water Leakage: None, when measured in accordance with ASTM E331 and ASTM E547 at a static air pressure difference of 15 psf.

G. System Internal Drainage: Drain water entering joints, condensation occurring in glazing channels, and migrating moisture occurring within system, to exterior by weep drainage network.

H. Air and Vapor Seal: Maintain continuous air barrier and vapor retarder throughout assembly, primarily in line with pane of glass and heel bead of glazing compound. Position thermal insulation on exterior surface of air barrier and vapor retarder.

1.5 SUBMITTALS

A. Section 01330 - Submittal Procedures: Submittal procedures.

B. Shop Drawings: Indicate opening dimensions, framed opening tolerances, affected related Work, details of assemblies, hardware, glazing details and installation requirements.

C. Product Data: Submit component dimensions, anchorage and fasteners, glass, internal drainage, and typical details.
   1. For installed products to comply with design loads, include structural analysis data prepared by or under the supervision of a qualified professional engineer detailing fabrication and assembly of aluminum windows and used to determine the following:
      a. Structural test pressures and design pressures for wind loads per local code requirements.
   2. Operating instructions for each type of aluminum window.

D. Samples: Submit two 12 x 12 inches in size illustrating window frame section, factory finished aluminum surfaces, glass units. Submit two samples of operating hardware.

E. Qualification Data: For Installer and Manufacturer.

F. Maintenance Data: For operable window sash, operating hardware, weather stripping and finishes to be included in maintenance manuals.

G. Manufacturer's Certificates: Certify Product performance ratings by independent third party such as AAMA, CAWM, or NFRC as meeting or exceeding specified requirements.

1.6 QUALITY ASSURANCE

A. Perform Work in accordance with the following:
   1. Aluminum Windows: Fabricate window assemblies in accordance with AAMA 101 for types of windows required.
   2. Insulated Glass: Fabricate insulated glass units in accordance with GANA (formerly FGMA) Glazing Manual.
   3. Maintain one copy of each document on site.

1.7 QUALIFICATIONS

A. Manufacturer: Company specializing in manufacturing commercial aluminum windows with minimum three years documented experience.

B. Installer: Company specializing in installation of commercial aluminum windows with minimum three years documented experience and with service facilities within 100 miles of Project.

1.8 PRE-INSTALLATION MEETINGS

A. Section 01300 - Administrative Requirements: Pre-installation meeting.

B. Convene minimum two weeks prior to commencing work of this section.

1.9 DELIVERY, STORAGE, AND PROTECTION

A. Section 01600 - Product Requirements: Product storage and handling requirements.

B. Handle Work of this section in accordance with AAMA CW-10-97.

C. Store and handle windows, hardware and all items in strict compliance with the Manufacturer’s instructions.

D. Protect factory finished aluminum surfaces. Do not use adhesive papers or sprayed coatings that bond when exposed to sunlight or weather.

1.10 ENVIRONMENTAL REQUIREMENTS

A. Section 01600 - Product Requirements.

B. Do not install glazing materials when ambient temperature is less than 40 degrees F.

C. Maintain this minimum temperature during and after installation of glazing materials.

D. Field Measurements: Verify aluminum window openings by field measurements before fabrication and indicate measurements on Shop Drawings.
   1. Established Dimensions: Where field measurements cannot be made without delaying the Work, establish opening dimensions and proceed with fabricating

aluminum windows without field measurements. Coordinate wall construction to ensure that actual opening dimensions correspond to established dimensions.

1.11 WARRANTY

A. Section 01700 - Execution Requirements: Product warranties and product bonds.

B. Warranty Period:
1. Window: Three years from date of Substantial Completion.
2. Glazing: Five years from date of Substantial Completion.
a. Seal failure, interpane dusting or misting, and replacement of same.
3. Metal Finish: Five years from date of Substantial Completion.

PART 2 - PRODUCTS

2.1 ALUMINUM WINDOWS

A. Manufacturers:
1. All Seasons Commercial, Model 2665 Single Hung
2. EFCO Corp.
3. Kawneer Co., Inc.
4. Traco Model
5. Substitutions: Section 01600 - Product Requirements.

B. Product Description: Aluminum windows thermally broken with interior portion of frame insulated from exterior portion; flush glass stops of screw fastened type.
1. Reinforced Mullion: Extruded aluminum with integral reinforcement of aluminum structural section.

2.2 COMPONENTS

A. Extruded Aluminum: Material Standard: ASTM B221, G.S. 10A-T5; 6063-T5 alloy and temper.

B. Frame Depth: Not less than 4".

C. Member Wall Thickness: Each master frame member shall have minimum wall thickness of 0.080" and shall provide structural strength to meet specified performance requirements. Each sash member shall have a minimum wall thickness of 0.080". All horizontal sash members shall be tubular construction. Meeting rail shall have a continuous interlock with double weather stripping.

D. Dimensions: Reference to dimensions for wall thickness and other cross-sectional dimensions of window members are nominal and in compliance with ANSI H35.2-1990.

E. Mullions and Cover Plates: Shall be extruded aluminum of 6063-T5 alloy and temper of profile and dimensions indicated on drawings. Mullions shall provide structural properties to resist wind pressure required by performance criteria and standards.

F. Thermal Barrier.
1. Frame thermal barrier shall be a minimum of 5/16” separation consisting of a two-part, chemically curing high density polyurethane which is mechanically and adhesively bonded to the aluminum.
2. Sash thermal barrier shall be a minimum of 1/4” separation consisting of a two-part, chemically curing high density polyurethane in conditioned thermal pockets which is mechanically and adhesively bonded to the aluminum.

G. Balances: block and tackle Class 5 heavy duty spring with larger frame jamb extrusions conforming to AAMA 902 and of appropriate capacity to hold sash stationary and permit smooth operation

H. Steel Sections: Profiled to suit mullion sections.

I. Insulating Glass: Sealed double pane units conforming to requirements in Section 08800 - Glazing.
1. Outer Pane: Green-Blue tinted Low E float glass
2. Inner Pane: Clear float glass
3. Pane Thickness: Minimum 1/4 inch thick. Determined by size or wind and suction loads
4. Minimum Total Unit Thickness: 1 inch
5. Glazing Materials: Manufacturer’s standard conforming with requirements specified in Section 08800 - Glazing.

J. Hardware:
1. Sash lock: Lever handle with cam lock.

K. Sills: Extruded aluminum; sloped for positive wash; fit under sash beyond wall face; one piece full width of opening jamb angles to terminate sill end.

L. Sub-Sills: Extruded aluminum; sloped for positive wash; fit under sash to Project beyond wall face; one piece full width of opening.

M. Operable Sash Weather Stripping: Resilient plastic; permanently resilient, profiled to effect weather seal.

N. Insect Screen Frame: Extruded aluminum frame of rectangular sections; fit with adjustable hardware; nominal size similar to operable glazed unit.

O. Insect Screens: Shall be aluminum, natural color to match frame.

P. Receptor system: head and jamb – two piece snap together receptor system.

2.3 ACCESSORIES

A. Fasteners and Anchors: Stainless steel.

B. Bituminous Paint: Fibered asphaltic type.

C. Limit Stops: Resilient rubber.

2.4 FABRICATION

A. Fabricate components with minimum clearances and shim spacing around perimeter of assembly, yet enabling installation and dynamic movement of perimeter seal.

B. Accurately fit and secure joints and corners. Make joints flush, hairline, and weatherproof.

C. Prepare components to receive anchor devices. Fabricate anchors.

D. Arrange fasteners and attachments to ensure concealment from view.

E. Prepare components with internal reinforcement for operating hardware.

F. Furnish internal reinforcement in mullions with galvanized steel members to maintain rigidity.

G. Permit internal drainage weep holes and channels to migrate moisture to exterior. Furnish internal drainage of glazing spaces to exterior through weep holes.

H. Assemble insect screen frame, miter and reinforce frame corners. Fit mesh taut into frame and secure. Fit frame with four spring loaded stainless steel pin retainers.

I. Double weatherstrip operable units.

J. Factory glaze window units. Install glass in accordance with Section 08800, to glazing method required to achieve performance criteria.

2.5 SHOP FINISHING

A. Finish Coatings: Conform to AAMA 611.

B. Clear Anodized Aluminum Surfaces: AA-M12C22A41 non-specular as fabricated mechanical finish, medium matte chemical finish, and Architectural Class I 0.7 mils clear anodized coating.

C. Locks, Operators, and Exposed Hardware: Baked Enameled to color as selected by Architect.

D. Pull Handles: Baked enamel color as selected by Architect.

E. Screens: Natural aluminum color.

F. Apply coat of bituminous paint on concealed aluminum surfaces in contact with cementitious or dissimilar materials.

G. Concealed Steel Items: Galvanized in accordance with ASTM A123/A123M to thickness Grade 85, 2.0 oz/sq ft.

PART 3 - EXECUTION

3.1 EXAMINATION

A. Section 01300 - Administrative Requirements: Coordination and project conditions.

B. Verify wall openings and adjoining air and vapor seal materials are ready to receive Work of this section.

3.2 INSTALLATION

A. Install windows in accordance with Manufacturer's recommendations and shop drawings with skilled craftspeople.

B. Attach window frame and shims to perimeter opening to accommodate construction tolerances and other irregularities.

C. Align window plumb and level, free of warp or twist. Maintain dimensional tolerances and alignment with adjacent Work.

D. Install sill and sill end angles.

E. Set sill members in bed of sealant or with gaskets, for weathertight construction.

F. Install windows and components to drain condensation, water penetrating joints, and moisture migrating within windows to the exterior.

G. Separate aluminum and other corrodible surfaces from sources of corrosion or electrolytic action at points of contact with other materials.

H. Install thermal isolation where components penetrate or disrupt building insulation. Pack fibrous insulation in shim spaces at perimeter of assembly to maintain continuity of thermal barrier.

I. Coordinate attachment and seal of perimeter air barrier and vapor retarder materials.

J. Install operating hardware.

3.3 ERECTION TOLERANCES

A. Section 01400 - Quality Requirements: Tolerances.

B. Maximum Variation from Level or Plumb: 1/16 inches every 3 ft non-cumulative or 1/8 inches per 10 ft, whichever is less.

3.4 ADJUSTING

A. Section 01700 - Execution Requirements: Testing, adjusting, and balancing.

B. Adjust hardware for smooth operation and secure weathertight closure.

3.5 CLEANING

A. Section 01700 - Execution Requirements: Final cleaning.

B. Remove protective material from factory finished aluminum surfaces.

C. Wash surfaces by method recommended and acceptable to sealant and window Manufacturer; rinse and wipe surfaces clean.

D. Remove excess sealant by moderate use of mineral spirits or other solvent acceptable to sealant and window Manufacturer.

3.6 DEMONSTRATION

A. Engage a factory-authorized service representative to train Owner's maintenance personnel to adjust, operate, and maintain window operating system.

END OF SECTION

SECTION 08710
DOOR HARDWARE

PART 1 - GENERAL

1.1 SUMMARY

A. Section includes hardware for wood, steel and aluminum doors.
   1. Provide door locksets, closures, exit devices, wall & floor stops, hinges, plate protection, gaskets, weather-stripping, seals, and thresholds.

B. Related Sections:
   1. Section 08110 - Standard Steel Doors
   2. Section 08115 - Standard Steel Frames
   3. Section 08212 - Flush Wood Doors
   4. Section 08333 - Overhead Coiling Doors: Lockable coiling doors
   5. Section 08410 - Aluminum Storefronts: Door hardware.

1.2 REFERENCES

A. American National Standards Institute:
   1. ANSI A156.1 - Butts and Hinges
   2. ANSI A156.2 - Bored and Preassembled Locks and Latches
   3. ANSI A156.3 - Exit Devices
   4. ANSI A156.4 - Door Controls - Closures
   5. ANSI A156.5 - Auxiliary Locks and Associated Products
   6. ANSI A156.6 - Architectural Door Trim
   7. ANSI A156.7 - Template Hinge Dimensions
   8. ANSI A156.8 - Door Controls - Overhead Holders
   9. ANSI A156.12 - Interconnected Locks and Latches
   10. ANSI A156.13 - Mortise Locks and Latches
   11. ANSI A156.15 - Closer Holder Release Devices
   12. ANSI A156.16 - Auxiliary Hardware
   13. ANSI A156.18 - Materials and Finishes
   14. ANSI A156 - Complete Set of 24 BHMA Standards (A156 Series) with Binder.

B. Builders Hardware Manufacturers Association:
   1. BHMA Directory of Certified Products.

C. National Fire Protection Association:
   1. NFPA 80 - Standard for Fire Doors, Fire Windows
   2. NFPA 252 - Standard Methods of Fire Tests of Door Assemblies.

D. Underwriters Laboratories Inc.:
   1. UL 10B - Fire Tests of Door Assemblies
   2. UL 305 - Panic Hardware
   3. UL - Building Materials Directory.

E. Intertek Testing Services (Warnock Hersey Listed):

1. WH - Certification Listings.

1.3 PERFORMANCE REQUIREMENTS

A. Fire Rated Openings: Provide door hardware listed by UL or Intertek Testing Services (Warnock Hersey Listed), or other testing laboratory approved by applicable authorities.
   1. Hardware: Tested in accordance with NFPA 252.

1.4 SUBMITTALS

A. Section 01330 - Submittal Procedures: Submittal procedures.

B. Product Data: Include installation details, material descriptions, dimensions of individual components and profiles, and finishes.

C. Door Hardware Schedule: Prepared by or under the supervision of supplier, detailing fabrication and assembly of door hardware, as well as procedures and diagrams. Coordinate the final Door Hardware Schedule with doors, frames, and related work to ensure proper size, thickness, hand, function, and finish of door hardware.
   1. Format: Comply with scheduling sequence and vertical format in DHI's "Sequence and Format for the Hardware Schedule."
   2. Organization: Organize the Door Hardware Schedule into door hardware sets indicating complete designations of every item required for each door or opening.
      a. Organize door hardware sets in same order as in the Door Hardware Schedule at the end of Part 3.
   3. Content: Include the following information:
      a. Type, style, function, size, label, hand, and finish of each door hardware item
      b. Manufacturer of each item
      c. Fastenings and other pertinent information
      d. Location of each door hardware set, cross-referenced to Drawings, both on floor plans and in door and frame schedule
      e. Explanation of abbreviations, symbols, and codes contained in schedule
      f. Mounting locations for door hardware
      g. Door and frame sizes and materials.

D. Keying Schedule: Prepared by or under the supervision of supplier, detailing Owner's final keying instructions for locks. Include schematic keying diagram and index each key set to unique door designations.

E. Warranties: Special warranties specified in this Section.

F. Manufacturer's Installation Instructions: Submit special procedures, and perimeter conditions requiring special attention.

1.5 CLOSEOUT SUBMITTALS

A. Section 01710 – Project Closeout: Closeout procedures.

B. Operation and Maintenance Data: Submit data on operating hardware, lubrication requirements, and inspection procedures related to preventative maintenance.

C. Keys: Deliver with identifying tags to Owner by security shipment direct from hardware supplier.

1.6 QUALITY ASSURANCE

A. Installer Qualifications: An experienced Installer who has completed door hardware similar in material, design, and extent to that indicated for this Project and whose work has resulted in construction with a record of successful in-service performance.

B. Supplier Qualifications: Door hardware supplier with warehousing facilities in Project's vicinity and who is or employs a qualified Architectural Hardware Consultant, available during the course of the Work to consult with Contractor, Architect, and Owner about door hardware and keying.
   1. Scheduling Responsibility: Preparation of door hardware and keying schedules.

C. Architectural Hardware Consultant Qualifications: A person who is currently certified by the Door and Hardware Institute as an Architectural Hardware Consultant and who is experienced in providing consulting services for door hardware installations that are comparable in material, design, and extent to that indicated for this Project.

D. Source Limitations: Obtain each type and variety of door hardware from a single Manufacturer, unless otherwise indicated.

E. Regulatory Requirements: Comply with provisions of the following:
   1. Where indicated to comply with accessibility requirements, comply with Americans with Disabilities Act (ADA), "Accessibility Guidelines for Buildings and Facilities (ADAAG),"as follows:
      a. Handles, Pulls, Latches, Locks, and other Operating Devices: Shape that is easy to grasp with one hand and does not require tight grasping, tight pinching, or twisting of the wrist.
      b. Door Closers: Comply with the following maximum opening-force requirements indicated:
         1) Interior Hinged Doors: 5 lbf applied perpendicular to door.
         2) Fire Doors: Minimum opening force allowable by authorities having jurisdiction.
      c. Thresholds: Not more than 1/2 inch high. Bevel raised thresholds with a slope of not more than 1:2.
   2. NFPA 101: Comply with the following for means of egress doors:
      a. Latches, Locks, and Exit Devices: Not more than 15 lbf to release the latch. Locks shall not require the use of a key, tool, or special knowledge for operation.
      b. Door Closers: Not more than 30 lbf to set door in motion and not more than 15 lbf to open door to minimum required width.
      c. Thresholds: Not more than 1/2 inch high.
   3. Electrified Door Hardware: Listed and labeled as defined in NFPA 70, Article 100, by a testing agency acceptable to authorities having jurisdiction.

F. Fire-Rated Door Assemblies: Provide door hardware for assemblies complying with NFPA 80 that are listed and labeled by a testing and inspecting agency acceptable to authorities having jurisdiction, for fire ratings indicated, based on testing according to NFPA 252.
   1. Test Pressure: Test at atmospheric pressure.

G. Keying Conference: Conduct conference at Project site to comply with requirements in Division 1 Section "Project Meetings." Incorporate keying conference decisions into final keying schedule after reviewing door hardware keying system including, but not limited to, the following:
   1. Function of building, flow of traffic, purpose of each area, degree of security required, and plans for future expansion
   2. Preliminary key system schematic diagram
   3. Requirements for key control system
   4. Address for delivery of keys.

H. Maintain one copy of each document on site.

1.7 QUALIFICATIONS

A. Manufacturer: Company specializing in manufacturing products specified in this section with minimum three years documented experience.

B. Hardware Supplier: Company specializing in supplying commercial door hardware with minimum three years documented experience.

C. Hardware Supplier Personnel: Employ Architectural Hardware Consultant (AHC) to assist in work of this section.

1.8 PRE-INSTALLATION MEETINGS

A. Section 01300 - Administrative Requirements: Pre-installation meeting.

B. Convene minimum two weeks prior to commencing work of this section with District Inspector.

C. Include persons involved with installation of doors, frames, and hardware.

1.9 DELIVERY, STORAGE, AND HANDLING

A. Section 01600 - Product Requirements: Product storage and handling requirements.

B. Package hardware items individually with necessary fasteners, instructions, and installation templates, when necessary; label and identify each package with door opening code to match hardware schedule.

C. Deliver keys to Owner by hand delivery, registered mail or overnight package service.

1.10 COORDINATION

A. Section 01300 - Administrative Requirements: Coordination and project conditions.

B. Coordinate Work with other directly affected sections involving manufacture or fabrication of internal reinforcement for door hardware and recessed items.
   1. Provide templates or actual hardware as required to ensure proper preparation of doors and frames.

C. Sequence installation to accommodate required utility connections.

D. Coordinate Owner's keying requirements during course of Work.

1.11 WARRANTY

A. Section 01700 - Execution Requirements: Product warranties and product bonds.

B. General Warranty: Special warranties specified in this Article shall not deprive Owner of other rights Owner may have under other provisions of the Contract Documents and shall be in addition to, and run concurrent with, other warranties made by Contractor under requirements of the Contract Documents.

C. Special Warranty: Written warranty, executed by Manufacturer agreeing to repair or replace components of door hardware that fail in materials or workmanship within specified warranty period. Failures include, but are not limited to, the following:
   1. Structural failures including excessive deflection, cracking, or breakage
   2. Faulty operation of operators and door hardware
   3. Deterioration of metals, metal finishes, and other materials beyond normal weathering.

D. Warranty Period: Three years from date of Substantial Completion, unless otherwise indicated.

E. Warranty Period for Manual Closers: 10 years from date of Substantial Completion.

1.12 MAINTENANCE MATERIALS

A. Section 01700 - Execution Requirements: Maintenance materials.

B. Furnish special wrenches and tools applicable for each different and for each special hardware component.

C. Furnish maintenance tools and accessories supplied by hardware component Manufacturer.

1.13 EXTRA MATERIALS

A. Section 01700 - Execution Requirements: Spare parts and maintenance products.

B. Furnish ten extra key lock cylinders for each master keyed group.

PART 2 - PRODUCTS

2.1 SCHEDULED DOOR HARDWARE

A. General: Provide door hardware for each door to comply with requirements in this Section, door hardware sets indicated in door and frame schedule, and the Door Hardware Schedule at the end of Part 3.
   1. Door Hardware Sets: Provide quantity, item, size, finish or color indicated, and products equivalent in function and comparable in quality to named products.

B. Designations: Requirements for design, grade, function, finish, size, and other distinctive qualities of each type of door hardware are indicated in the Door Hardware Schedule at the end of Part 3. Products are identified by using door hardware designations, as follows:
   1. Named Manufacturer's Products: Product designation and Manufacturer are listed for each door hardware type required for the purpose of establishing minimum requirements. Manufacturers' names are abbreviated in the Door Hardware Schedule.

2.2 HINGES AND PIVOTS

A. Manufacturers: Subject to compliance with requirements, provide products by one of the following:
   1. Hinges:
      a. Hager Companies (HA)
      b. Stanley Commercial Hardware; Div. of The Stanley Works (ST).
      c. McKinney MFG. CO. (McK)

B. Quantity: Provide the following, unless otherwise indicated:
   1. Two Hinges: For doors with heights up to 60 inches
   2. Three Hinges: For doors with heights 61 to 90 inches
   3. Four Hinges: For doors with heights 91 to 120 inches
   4. For doors with heights more than 120 inches, provide 4 hinges, plus 1 hinge for every 30 inches of door height greater than 120 inches.

C. Size: Provide the following, unless otherwise indicated, with hinge widths sized for door thickness and clearances required:

Maximum Door Size (inches)	Hinge Height (inches)	Metal Thickness (inches) Standard Weight	Heavy Weight
32 by 84 by 1-3/8	3-1/2	0.123	-
36 by 84 by 1-3/8	4	0.130	-
36 by 84 by 1-3/4	4-1/2	0.134	0.180
42 by 90 by 1-3/4	4-1/2	0.134	0.180
48 by 120 by 1-3/4	5	0.146	0.190

D. Template Requirements: Except for hinges and pivots to be installed entirely (both leaves) into wood doors, provide only template-produced units.

E. Hinge Weight: Unless otherwise indicated, provide the following:
1. Entrance Doors: Heavy-weight hinges
2. Doors with Closers: Antifriction-bearing hinges
3. Interior Doors: Standard-weight hinges.

F. Hinge Base Metal: Unless otherwise indicated, provide the following:
1. Exterior Hinges: Stainless steel, with stainless-steel pin
2. Interior Hinges: Brass, with stainless-steel pin
3. Hinges for Fire-Rated Assemblies: Steel, with steel pin.

G. Hinge Options: Comply with the following where indicated in the Door Hardware Schedule or on Drawings:
1. Nonremovable Pins: Provide set screw in hinge barrel that, when tightened into a groove in hinge pin, prevents removal of pin while door is closed; for the following applications:
   a. Out swinging exterior doors
   b. Out swinging corridor doors with locks.
2. Corners: Square.

H. Fasteners: Comply with the following:
1. Machine Screws: For metal doors and frames. Install into drilled and tapped holes.
2. Wood Screws: For wood doors and frames.
3. Threaded-to-the-Head Wood Screws: For fire-rated wood doors.
4. Screws: Phillips flat-head screws; machine screws (drilled and tapped holes) for metal doors wood screws for wood doors and frames. Finish screw heads to match surface of hinges.

2.3 LOCKS AND LATCHES

A. Manufacturers: Subject to compliance with requirements, provide products by one of the following:
1. Mechanical Locks and Latches:
   a. Yale, Inc. (YA).
   b. Corbin Russwin Architectural Hardware; Div. of Yale Security Inc. (CR).

B. Lock Trim: Comply with the following:
1. Lever: Wrought, forged, or cast
2. Escutcheon (Rose): Wrought, forged, or cast
3. Dummy Trim: Match lever lock trim and escutcheons
4. Lockset Designs: Provide the lockset design designated below or, if sets are provided by another Manufacturer, provide designs that match those designated:

Mortise Locks: Provide design indicated.

C. Lock Throw: Comply with testing requirements for length of bolts to comply with labeled fire door requirements, and as follows:
   1. Bored Locks: Minimum 1/2-inch latchbolt throw
   2. Mortise Locks: Minimum 3/4-inch latchbolt throw
   3. Deadbolts: Minimum 1-inch bolt throw.

D. Backset: 2-3/4 inches, unless otherwise indicated.

2.4 DOOR BOLTS

A. Manufacturers: Subject to compliance with requirements, provide products by one of the following:
   1. Flush Bolts: (Where Applicable)
      a. Glynn-Johnson; an Ingersoll-Rand Company (GJ)
      b. Hager Companies (HA)

B. Bolt Throw: Comply with testing requirements for length of bolts to comply with labeled fire door requirements, and as follows:
   1. Mortise Flush Bolts: Minimum 3/4-inch throw.

2.5 CYLINDERS AND KEYING

A. Manufacturers: Subject to compliance with requirements, provide products by one of the following:
   1. Cylinders: Same Manufacturer as for locks and latches.
   2. Key Control Systems:
      a. Yale, Inc. (YA)
      b. Approved equal.

B. Cylinders: Manufacturer's standard tumbler type, constructed from brass or bronze, stainless steel, or nickel silver, and complying with the following:
   1. Number of Pins: Six
   2. Mortise Type: Threaded cylinders with rings and straight- or clover-type cam.

C. Permanent Cores: Manufacturer's standard; finish face to match lockset; complying with the following:
   1. Interchangeable Cores: Core insert, removable by use of a special key, and usable with other Manufacturers' cylinders.

D. Construction Keying: Comply with the following:
   1. Construction Cores: Provide construction cores that are replaceable by permanent cores. Provide 10 construction master keys.
      a. Replace construction cores with permanent cores, as directed by Owner.

E. Keying System: Unless otherwise indicated, provide a factory-registered keying system complying with the following requirements:
   1. Great-Grand Master Key System: Cylinders are operated by a change key, a master key, a grand master key, and a great-grand master key.

F. Keys: Provide nickel-silver keys complying with the following:

1. Stamping: Permanently inscribe each key with a visual key control number and include the following notation:
   a. Notation: "DO NOT DUPLICATE."
2. Quantity: In addition to three keys for each lock, provide the following:
   a. Cylinder Change Keys: Five
   b. Master Keys: Five
   c. Grand Master Keys: Five
   d. Great-Grand Master Keys: Five.

G. Key Control System: BHMA Grade 1 system, including key-holding hooks, labels, two sets of key tags with self-locking key holders, key-gathering envelopes, and temporary and permanent markers. Contain system in metal cabinet with baked-enamel finish.
1. Portable Cabinet: Tray for mounting in file cabinet, equipped with key-holding panels, envelopes, and cross-index system.
2. Capacity: Able to hold keys for 150 percent of the number of locks.
3. Cross-Index System: Set up by key control Manufacturer, complying with the following:
   a. Card Index: Furnish four sets of index cards for recording key information. Include three receipt forms for each key-holding hook.
   b. Computer Software: Furnish cross-index software for recording and reporting key-holder listings, tracking keys and lock and key history, and printing receipts for transactions. Include instruction manual.

2.6 STRIKES

A. Strikes: Provide Manufacturer's standard strike with strike box for each latch or lock bolt, with curved lip extended to protect frame, finished to match door hardware set, unless otherwise indicated, and as follows:
1. Flat-Lip Strikes: For locks with three-piece antifriction latchbolts, as recommended by Manufacturer.

2.7 OPERATING TRIM

A. Manufacturers: Subject to compliance with requirements.

B. Materials: Fabricate from stainless steel, unless otherwise indicated.

B. Push-Pull Design: As indicated at the end of Part 3.

2.8 CLOSERS

A. Manufacturers: Subject to compliance with requirements, provide products by one of the following:
1. Surface-Mounted Closers:
   a. Yale, Inc. (YA)
   b. Corbin Russwin Architectural Hardware (CR)
   c. LCN Closers; an Ingersoll-Rand Company (LCN).

B. Size of Units: Unless otherwise indicated, comply with Manufacturer's written recommendations for size of door closers depending on size of door, exposure to weather,

and anticipated frequency of use. Provide factory-sized closers, adjustable to meet field conditions and requirements for opening force.

2.9 PROTECTIVE TRIM UNITS

A. Manufacturers: Subject to compliance with requirements, provide products by one of the following:
   1. Metal Protective Trim Units:
      a. McKinney Mfg. Co. (McK)
      b. Hager Companies (HAG)
      c. Approved equal

B. Materials: Fabricate protection plates from the following:
   1. Stainless Steel: 0.050 inch thick; beveled top and 2 sides.

C. Fasteners: Provide Manufacturer's standard exposed fasteners for door trim units consisting of either machine or self-tapping screws.

D. Furnish protection plates sized 1-1/2 inches less than door width on push side and 1/2 inch less than door width on pull side, by height specified in Door Hardware Schedule.

2.10 STOPS AND HOLDERS

A. Manufacturers: Subject to compliance with requirements, provide products by one of the following:
   1. Hager Companies (HA)
   2. Approved equal.

B. Standards: Comply with the following:
   1. Stops and Bumpers: BHMA A156.16
   2. Door Silencers: BHMA A156.16.

C. Stops and Bumpers: BHMA Grade 1, unless Grade 2 is indicated.

D. Combination Overhead Stops and Holders: BHMA Grade 1, unless Grade 2 is indicated.

E. Floor Stops: For doors, unless wall or other type stops are scheduled or indicated. Do not mount floor stops where they will impede traffic.
   1. Where floor or wall stops are not appropriate, provide overhead holders.

F. Silencers for Metal Door Frames: BHMA Grade 1; neoprene or rubber, minimum diameter 1/2 inch; fabricated for drilled-in application to frame.

2.11 DOOR GASKETING

A. Manufacturers: Subject to compliance with requirements, provide products by one of the following:
   1. Door Gasketing:
      a. National Guard (NG)
      b. Hager Companies (HA)

c. Pemko Manufacturing Co., Inc. (PEM)
d. Approved equal.

2. Door Bottoms:
   a. Hager Companies (HA)
   b. National Guard (NG)
   c. Pemko Manufacturing Co., Inc. (PEM)
   d. Approved equal.

B. General: Provide continuous weather-strip gasketing on exterior doors and provide smoke, light, or sound gasketing on interior doors where indicated or scheduled. Provide noncorrosive fasteners for exterior applications and elsewhere as indicated.
   1. Perimeter Gasketing: Apply to head and jamb, forming seal between door and frame.
   2. Door Bottoms: Apply to bottom of door, forming seal with threshold when door is closed.

C. Air Leakage: Not to exceed 0.50 cfm per foot of crack length for gasketing other than for smoke control, as tested according to ASTM E 283.

D. Smoke-Labeled Gasketing: Assemblies complying with NFPA 105 that are listed and labeled by a testing and inspecting agency acceptable to authorities having jurisdiction, for smoke-control ratings indicated, based on testing according to UL 1784.
   1. Provide smoke-labeled gasketing on 20-minute-rated doors, fire rated labeled, and on smoke-labeled doors.

E. Fire-Labeled Gasketing: Assemblies complying with NFPA 80 that are listed and labeled by a testing and inspecting agency acceptable to authorities having jurisdiction, for fire ratings indicated, based on testing according to UL 10B or NFPA 252.

F. Replaceable Seal Strips: Provide only those units where resilient or flexible seal strips are easily replaceable and readily available from stocks maintained by Manufacturer.

G. Gasketing Materials: Comply with ASTM D 2000 and AAMA 701/702.

2.12 THRESHOLDS

A. Manufacturers: Subject to compliance with requirements, provide products by one of the following:
   1. Pemko Manufacturing Co., Inc. (PEM)
   2. National Guard (NG)
   3. Hager Companies (HA)
   4. Approved equal

2.13 EXIT DEVICES

A. Manufacturers: Subject to compliance with requirements, provide products by one of the following:
   1. Yale, Inc. (YA)
   2. Corbin Russwin Architectural Hardware(CR)
   3. Dorma (D)

B. Exit Devices: ANSI A156.3, Grade 1 rim type, with push pad, unless otherwise indicated. Furnish standard strikes with extended lips to protect trim from being marred by latch bolt verify type of cutouts provided in metal frames.
   1. Types: Suitable for doors requiring exit devices.

2.14 MISCELLANEOUS DOOR HARDWARE

A. Manufacturers: Subject to compliance with requirements, provide products by one of the following:
   1. Hager Companies (HA)
   2. Yale, Inc. (YA)
   3. Approved equal.

B. If needed, add requirements for access control devices, such as digital keypads, proximity sensors, switch devices, etc.

2.15 FABRICATION

A. Base Metals: Produce door hardware units of base metal, fabricated by forming method indicated, using Manufacturer's standard metal alloy, composition, temper, and hardness. Furnish metals of a quality equal to or greater than that of specified door hardware units and BHMA A156.18 for finishes. Do not furnish Manufacturer's standard materials or forming methods if different from specified standard.

B. Fasteners: Provide door hardware manufactured to comply with published templates generally prepared for machine, wood, and sheet metal screws. Provide screws according to commercially recognized industry standards for application intended. Provide Phillips flat-head screws with finished heads to match surface of door hardware, unless otherwise indicated.
   1. Concealed Fasteners: For door hardware units that are exposed when door is closed, except for units already specified with concealed fasteners. Do not use through bolts for installation where bolt head or nut on opposite face is exposed unless it is the only means of securely attaching the door hardware. Where through bolts are used on hollow door and frame construction, provide sleeves for each through bolt.
   2. Steel Machine or Wood Screws: For the following fire-rated applications:
      a. Mortise hinges to doors.
      b. Strike plates to frames.
      c. Closers to doors and frames.
   3. Steel Through Bolts: For the following fire-rated applications, unless door blocking is provided:
      a. Surface hinges to doors.
      b. Closers to doors and frames.
      c. Surface-mounted exit devices.
   4. Spacers or Sex Bolts: For through bolting of hollow metal doors.
   5. Fasteners for Wood Doors: Comply with requirements of DHI WDHS.2, "Recommended Fasteners for Wood Doors."

2.16 FINISHES

A. Standard: Comply with BHMA A156.18.

B. Protect mechanical finishes on exposed surfaces from damage by applying a strippable, temporary protective covering before shipping.

C. Appearance of Finished Work: Variations in appearance of abutting or adjacent pieces are acceptable if they are within one-half of the range of approved Samples. Noticeable variations in the same piece are not acceptable. Variations in appearance of other components are acceptable if they are within the range of approved Samples and are assembled or installed to minimize contrast.

D. BHMA Designations: Comply with base material and finish requirements indicated by the following:
   1. BHMA 626: Satin chromium plated over nickel, over brass or bronze base metal
   2. BHMA 628: Satin aluminum, clear anodized, over aluminum base metal
   3. BHMA 630: Satin stainless steel, over stainless-steel base metal
   4. BHMA 652: Satin chromium plated over nickel, over steel base metal
   5. BHMA 689: Aluminum painted, over any base metal.

PART 3 - EXECUTION

3.1 EXAMINATION

A. Examine doors and frames, with Installer present, for compliance with requirements for installation tolerances, labeled fire door assembly construction, wall and floor construction, and other conditions affecting performance.

B. Proceed with installation only after unsatisfactory conditions have been corrected.

3.2 PREPARATION

A. Steel Doors and Frames: Comply with DHI A115 series.
   1. Surface-Applied Door Hardware: Drill and tap doors and frames according to SDI 107.

B. Wood Doors: Comply with DHI A115-W series.

3.3 INSTALLATION

A. Mounting Heights: Mount door hardware units at heights indicated in following applicable publications, unless specifically indicated or required to comply with governing regulations:
   1. Standard Steel Doors and Frames: DHI's "Recommended Locations for Architectural Hardware for Standard Steel Doors and Frames"
   2. Custom Steel Doors and Frames: DHI's "Recommended Locations for Builders' Hardware for Custom Steel Doors and Frames"

3. Wood Doors: DHI WDHS.3, "Recommended Locations for Architectural Hardware for Wood Flush Doors."

B. Install each door hardware item to comply with Manufacturer's written instructions. Where cutting and fitting are required to install door hardware onto or into surfaces that are later to be painted or finished in another way, coordinate removal, storage, and reinstallation of surface protective trim units with finishing work specified in Division 9 Sections. Do not install surface-mounted items until finishes have been completed on substrates involved.
1. Set units level, plumb, and true to line and location. Adjust and reinforce attachment substrates as necessary for proper installation and operation.
2. Drill and countersink units that are not factory prepared for anchorage fasteners. Space fasteners and anchors according to industry standards.

C. Key Control System: Place keys on markers and hooks in key control system cabinet, as determined by final keying schedule.

D. Thresholds: Set thresholds for exterior and acoustical doors in full bed of sealant complying with requirements specified in Division 7 Section "Joint Sealants."

3.4 ADJUSTING

A. Initial Adjustment: Adjust and check each operating item of door hardware and each door to ensure proper operation or function of every unit. Replace units that cannot be adjusted to operate as intended. Adjust door control devices to compensate for final operation of heating and ventilating equipment and to comply with referenced accessibility requirements.
1. Door Closers: Adjust sweep period so that, from an open position of 70 degrees, the door will take at least 3 seconds to move to a point 3 inches from the latch, measured to the leading edge of the door.
2. All door hardware shall fully comply with the latest version of Texas Accessibility Standards (TAS) of the Architectural Barriers Act, Article 9102, Texas Civil Statutes.

3.5 CLEANING AND PROTECTION

A. Clean adjacent surfaces soiled by door hardware installation.

B. Clean operating items as necessary to restore proper function and finish.

C. Provide final protection and maintain conditions that ensure door hardware is without damage or deterioration at time of Substantial Completion.

3.6 DEMONSTRATION

A. Engage a factory-authorized service representative to train Owner's maintenance personnel to adjust, operate, and maintain door hardware and door hardware finishes.

3.7 DOOR HARDWARE SCHEDULE

HW-1 Doors 105, 112B

3 ea.	Hinges	TA2314 4.5 x 4.5 (NRP)	McK	US32D
1 ea.	Exit Device	7100-36 x MO626Fx630x1193-6-E1R	YA	630
1 ea.	Exit Device Trim	Classroom Cylinder Controls T-Piece	YA	630
1 ea.	Closer	3501	YA	689
1 ea.	Threshold	896V-36”	NG	ALUM
1 ea.	Protection Plate	KP50-10” X 34” Stainless Steel	McK	US32D
1 ea.	Door Bottom	777 S	HA	MIL
1 ea.	Floor Stop	259 F	HA	US26D
1 set	Weatherstrip	160VA – 1pc@36”; 2pc@84”	NG	ALUM

HW-2 Doors 116D, 117E

6 ea.	Hinges	TA2314 4.5 x 4.5 (NRP)	McK	US32D
1 ea.	Storeroom Lock	MO 5305LN 1210 6 E1R	YA	626
1 ea.	Closer	3501	YA	689
1 set	Weatherstrip	160VA – 1pc@36”; 2pc@84”	NG	ALUM
1 ea.	Floor Stop	259 F	HA	US26D
1 ea.	Protection Plate	KP50-10” X 34” Stainless Steel	McK	US32D

HW-3 Doors 116A, 117A, 117D, 119A, 119D

3 ea.	Hinges	TA2314 4.5 x 4.5 (NRP)	McK	US32D
1 ea.	Dorm Lock	MOE8822FL 2196	YA	626
1 ea.	Closer	3501	YA	689
1 ea.	Threshold	425SIA – 36”	NG	ALUM
1 ea.	Protection Plate	KP50-10” X 34” Stainless Steel	McK	US32D
1 ea.	Door Bottom	777 S	HA	MIL
1 ea.	Floor Stop	259 F	HA	US26D
1 set	Weatherstrip	160VA – 1pc@36”; 2pc@84”	NG	ALUM

HW-4 Doors 113, 114, 115

3 ea.	Full Mort Hinge	TA2714 4.5 x 4.5	McK	US26D
1 ea.	Storeroom Lock	MO 5305LN 1210 6 E1R	YA	626
1 ea.	Closer	3501	YA	689
1 set	Weatherstrip	2525B-17’	NG	BR
1 ea.	Floor Stop	259 F	HA	US26D

HW-5 Door 111

3 ea.	Full Mort Hinge	TA2714 4.5 x 4.5 NRP	McK	US26D
1 ea.	Classroom Lock	MO 5308LN 1210 6 E1R	YA	626
1 ea.	Closer	3501	YA	689
1 set	Weatherstrip	2525B-17’	NG	BR
1 ea.	Floor Stop	259 F	HA	US26D

HW-6 Doors 112A

3 ea.	Full Mort Hinges	TA2714 4.5 x 4.5	McK	US26D
1 ea.	Passage Latch	MO 5301LN	YA	626
1 ea.	Wall Stop	236W	HA	US26D
1 ea.	Closer	3501	YA	689
1 set	Weatherstrip	2525B-17’	NG	BR
1 ea.	Protection Plate	KP50-10” X 34” Stainless Steel	McK	US32D

HW-7 Doors 102,103,104

3 ea.	Full Mort Hinges	TA2714 4.5 x 4.5	McK	US26D
1 ea.	Office Lock	MO 5307LN 1210 6 E1R	YA	626
1 set	Weatherstrip	2525B-17’	NG	BR
1 ea.	Wall Stop	236 W	HA	US26D

HW-8 Doors 107, 109A, 110

3 ea.	Full Mort Hinges	TA2714 4.5 x 4.5	McK	US26D
1 ea.	Pull Handle	33E 4” x 16”	HA	US32D
1 ea.	Push Plate	30S 4” x 16”	HA	US32D
1 ea.	Wall Stop	236 W	HA	US26D
1 ea.	Closer	3501	YA	689
1 set	Weatherstrip	2525B-17’	NG	BR
1 ea.	Protection Plate	KP50-10” X 34” Stainless Steel	McK	US32D

HW-9 Doors 118, 121A, 123

3 ea.	Hinge	TA2714 4.5 x 4.5 (NRP)	McK	US26D
1 ea.	Storeroom Lock	MO 5305LN 1210 6 E1R	YA	626
1 ea.	Closer	3501	YA	689
1 set	Weatherstrip	2525B-17’	NG	BR
1 ea.	Floor Stop	259 F	HA	US26D

HW-10 Doors 109B

3 ea.	Full Mort Hinge	TA2714 4.5 x 4.5	McK	US26D
1 ea.	Privacy Lock	MO 5302LN	YA	626
1 ea.	Closer	3501	YA	689
1 set	Weatherstrip	2525B-17’	NG	BR
1 ea.	Wall Stop	236W	HA	US26D

HW-10 Door 101: Storefront door & frame

1 ea.	Threshold	896 V-36”	NG	Alum
1 ea.	Mortise Cylinder	2196 E1R	YA	US26D

Remainder of Hardware by Storefront Door Supplier.
1 each deadlock

1 each door closers
1 each doorstop
1 each push bar,
1 each door pull,
1 each bottom rail weather-stripping
1 each panic hardware

HW-11 Doors 116B, 116C, 117B, 117C, 119B, 119C, 119E, 119F, 121B

1 ea.	Mortise cylinder	2196E1R	YA	US26D

Remainder of Hardware by Door Supplier.

END OF SECTION

SECTION 08800
GLAZING

PART 1 - GENERAL

1.1 SUMMARY

A. Section includes glass glazing for metal frames, doors, and windows.
   1. Glass glazing materials and installation requirements are included in this section for other sections referencing this section.

B. Related Sections:
   1. Section 07900 - Joint Sealers: Sealant and back-up material other than glazing sealants
   2. Section 08110 - Standard Steel Doors: Glazed doors
   3. Section 08212 - Flush Wood Doors: Glazed doors
   4. Section 08410 - Metal-Framed Storefronts
   5. Section 08520 - Aluminum Windows: Glazed windows.

1.2 REFERENCES

A. American National Standards Institute:
   1. ANSI Z97.1 - Safety Glazing Materials Used in Buildings Safety.

B. American Society of Civil Engineers:
   1. ASCE 7 - Minimum Design Loads for Buildings and Other Structures.

C. ASTM International:
   1. ASTM C570 - Standard Specification for Oil- and Resin-Base Caulking Compound for Building Construction
   2. ASTM C669 - Standard Specification for Glazing Compounds for Back Bedding and Face Glazing of Metal Sash
   3. ASTM C864 - Standard Specification for Dense Elastomeric Compression Seal Gaskets, Setting Blocks, and Spacers
   4. ASTM C920 - Standard Specification for Elastomeric Joint Sealants
   5. ASTM C1036 - Standard Specification for Flat Glass
   6. ASTM C1048 - Standard Specification for Heat-Treated Flat Glass-Kind HS, Kind FT Coated and Uncoated Glass
   7. ASTM C1172 - Standard Specification for Laminated Architectural Flat Glass.
   8. ASTM C1193 - Standard Guide for Use of Joint Sealants
   9. ASTM D4802 - Standard Specification for Poly (Methyl Methacrylate) Acrylic Plastic Sheet
   10. ASTM E90 - Standard Test Method for Laboratory Measurement of Airborne Sound Transmission Loss of Building Partitions and Elements
   11. ASTM E330 - Standard Test Method for Structural Performance of Exterior Windows, Curtain Walls, and Doors By Uniform Static Air Pressure Difference
   12. ASTM E546 - Standard Test Method for Frost Point of Sealed Insulating Glass Units

13. ASTM E576 - Standard Test Method for Frost Point of Sealed Insulating Glass Units in the Vertical Position
14. ASTM E773 - Standard Test Methods for Seal Durability of Sealed Insulating Glass Units
15. ASTM E774 - Standard Specification for Sealed Insulating Glass Units
16. ASTM E1425 - Standard Practice for Determining the Acoustical Performance of Exterior Windows and Doors.

D. Glass Association of North America:
1. GANA - FGMA Sealant Manual
2. GANA - Glazing Manual
3. GANA - Laminated Glass Design Guide.

E. National Fire Protection Association:
1. NFPA 80 - Standard for Fire Doors, Fire Windows.

F. Underwriters Laboratories Inc.:
1. UL - Building Materials Directory.

1.3 PERFORMANCE REQUIREMENTS

A. Provide glass and glazing materials for continuity of building enclosure vapor retarder and air barrier:
1. In conjunction with materials described in Section 07900.
2. To utilize inner pane of multiple pane sealed units for continuity of air barrier and vapor retarder seal.
3. To maintain continuous air barrier and vapor retarder throughout glazed assembly from glass pane to heel bead of glazing sealant.

B. Size glass to withstand dead loads and positive and negative live loads acting normal to plane of glass as calculated in accordance with applicable code, as measured in accordance with ASTM E330 and as calculated in accordance with ASCE 7 - Calculation of Wind Loads.
1. Not less than wind loads applicable to Project as required by ASCE 7 "Minimum Design Loads for Buildings and Other Structures":
2. Design per local code requirements for wind loads.

C. Limit glass deflection to 1/200 or flexure limit of glass with full recovery of glazing materials, whichever is less.

1.4 SUBMITTALS

A. Section 01330 - Submittal Procedures: Submittal procedures.

B. Product Data:
1. Glass: Provide structural, physical and environmental characteristics, size limitations, special handling or installation requirements.

2. Glazing Sealants, Compounds and Accessories: Provide chemical, functional, and environmental characteristics, limitations, special application requirements. Identify available colors where exposed.

C. Samples:
1. Glass: Submit two samples 12 x 12 inch in size, illustrating each glass units, coloration.
2. Glazing Materials: Submit 6 inch long bead of glazing sealant and gaskets, color as selected.

D. Certificates: Certify products meet or exceed specified requirements.

E. Manufacturer's Certificate: Certify sealed insulated glass, meets or exceeds specified requirements.

F. Qualification Data: For Installers.

G. Product Test Reports: For each of the following types of glazing products:
1. Tinted float glass
2. Coated float glass
3. Insulating glass
4. Glazing gaskets.

H. Warranties: Special warranties specified in this Section.

1.5 QUALITY ASSURANCE

A. Perform Work in accordance with GANA Glazing Manual, GANA Sealant Manual, for glazing installation methods.

B. Installer Qualifications: An experienced Installer who has completed glazing similar in material, design, and extent to that indicated for this Project; whose work has resulted in glass installations with a record of successful in-service performance; and who employs glass Installers for this Project who are certified under the National Glass Association's Certified Glass Installer Program.

C. Source Limitations for Glazing Accessories: Obtain glazing accessories through one source from a single Manufacturer for each product and installation method indicated.

D. Insulating-Glass Certification Program: Permanently marked either on spacers or on at least one component lite of units with appropriate certification label of the following testing and inspecting agency:
1. Insulating Glass Certification Council.

E. Maintain one copy of each document on site.

1.6 QUALIFICATIONS

A. Installer: Company specializing in performing Work of this section with minimum three years documented experience approved by Manufacturer.

1.7 PRE-INSTALLATION MEETING

A. Section 01300 - Administrative Requirements: Preinstallation meeting.

B. Convene minimum one week before starting Work of this section.

1.8 DELIVERY, STORAGE, AND HANDLING

A. Protect glazing materials according to Manufacturer's written instructions and as needed to prevent damage to glass and glazing materials from condensation, temperature changes, direct exposure to sun, or other causes.

B. For insulating-glass units that will be exposed to substantial altitude changes, comply with insulating-glass Manufacturer's written recommendations for venting and sealing to avoid hermetic seal ruptures.

1.9 ENVIRONMENTAL REQUIREMENTS

A. Section 01600 - Product Requirements.

B. Do not install glazing when ambient temperature is less than 50 degrees F.

C. Environmental Limitations: Do not proceed with glazing when ambient and substrate temperature conditions are outside limits permitted by glazing material Manufacturers and when glazing channel substrates are wet from rain, frost, condensation, or other causes.

D. Maintain minimum ambient temperature before, during and 24 hours after installation of glazing compounds.

1.10 WARRANTY

A. Section 01700 - Execution Requirements: Product warranties and product bonds.

B. Furnish ten year warranty to include coverage for sealed glass units from seal failure, interpane dusting or misting, and replacement of same.

C. Furnish ten year warranty to include coverage for delamination of laminated glass and replacement of same.

1.11 EXTRA MATERIALS

A. Section 01700 - Execution Requirements: Spare parts and maintenance products.

B. Supply two of each insulated glass units for windows.

PART 2 - PRODUCTS

2.1 GLAZING

A. Manufacturers:
1. Substitutions: Section 01600 - Product Requirements.

B. Sealed Insulating Glass Manufacturers:
1. Substitutions: Section 01600 - Product Requirements.

2.2 COMPONENTS

A. Flat Glass (Type FG): Minimum 1/4 inch unless otherwise indicated.
1. Clear Float Glass (Type FG-CF): ASTM C1036, Type 1 transparent flat, Class 1 clear, Quality q3 glazing select
2. Clear Heat Strengthened Glass (Type FG-CH): ASTM C1048, Kind HS, heat strengthened, Condition A uncoated, Type 1 transparent flat, Class 1 clear, Quality q3 glazing select
3. Tinted Float Glass (Type FG-TF): ASTM C1036, Type 1 transparent flat, Class 2 tinted heat-absorbing and light reducing, Quality q3 glazing select
4. Tinted Heat Strengthen Glass (Type FG-TH): ASTM C1048, Kind HS heat strengthened, Condition A uncoated, Type 1 transparent flat, Class 2 tinted heat-absorbing and light reducing, Quality q3 glazing select
5. Low E Clear Float Glass (Type FG-EC): Clear float glass Type FG-CF, with low emissivity coating on inner surface
6. Low E Clear Heat Strengthened Glass (Type FG-EHC): Clear heat strengthened glass Type FG-CH, with low emissivity coating on inner Number 2 surface
7. Low E Tinted Heat Strengthened Glass (Type FG-EHT): Tinted heat strengthened glass Type FG-TH, with low emissivity coating on inner surface.

B. Safety Glass (Type SG): Conform to ANSI Z97.1, minimum thickness 1/4 inch unless otherwise indicated.
1. Clear Tempered Glass (Type SG-CT): ASTM C1048, Kind FT Fully tempered, Condition A, uncoated, Type 1 transparent flat, Class 1 clear, Quality q3 glazing select
2. Tinted Tempered Glass (Type FG-TT): ASTM C1048, Kind FT Fully tempered, Condition A, uncoated, Type 1 transparent flat, Class 2 tinted heat-absorbing and light reducing, Quality q3 glazing select
   a. Tint: Blue-Green.

C. Fire Resistive Glass (Type FRG): Glazing materials to by types approved for use with specified materials in fire rated applications. Minimum 1/4 inch thick unless otherwise indicated.
1. Fire-Resistive Gel-Filled Safety Glazing (Type FRG-GC): Transparent fire-resistive safety glazing.

a. Fire Rating: 20 minute rating as listed in UL Building Materials Directory and approved by applicable authorities
b. Thickness: Manufacturer's standard for applications indicated
c. Safety Glazing: Comply with ANSI Z97.1.

D. Solar-Control Low-E Insulating-Glass Units IG-1:
1. Basis-of-Design Product: Sungate 500(3) Low-E Glass Azuria by PPG Industries, Inc. or approved equivalent:
a. Overall Unit Thickness and Thickness of Each Lite: 1inch total with ¼" inch lite
b. Interspace Content: Dry Hermetic Air
c. Outdoor Lite: Azuria Class 2 (tinted) float glass by PPG Industries, Inc.
1) Tint Color: "Sungate" (Blue-Green)
2) Kind HS (heat strengthened) of Kind FT (fully tempered).
d. Indoor Lite: Class 1 (clear**)** float glass.
1) Annealed or Kind FT (fully tempered).
2. Low-E Coating: Sputtered on third surface
3. Visible Light Transmittance: 57 percent
4. Winter Nighttime U-Factor: 0.35
5. Summer Daytime U-Factor: 0.35
6. Solar Heat Gain Coefficient: 0.46
7. Outdoor Visible Reflectance: 12 percent
8. Shading Coefficient: 0.40
9. Insulated Glass Unit Edge Seal Construction: Aluminum, bent and soldered corners
10. Spacer Specifications: Manufacturer's standard spacer material and construction complying with the following requirements:
a. Spacer Material: Aluminum with mill or clear anodic finish
b. Desiccant: Molecular sieve or silica gel, or blend of both
c. Corner Construction: Manufacturer's standard corner construction.

2.3 ACCESSORIES

A. Elastomeric Glazing Sealants: Materials compatible with adjacent materials including glass, insulating glass seals, and glazing channels.
1. Silicone Glazing Sealant: ASTM C920, Type S, Grade NS, Class and Use suitable for glazing application indicated; single component; solvent curing; capable of water immersion without loss of properties; non-bleeding, non-staining, cured Shore A hardness of 15 to 25.
a. Color: As Selected from Manufacturers' standard
b. Structural Silicone: Furnish high-modulus structural silicone glazing materials where sealant bonds glass to substrate.
2. Polysulfide Glazing Sealant: ASTM C920, Type M, Grade NS, Class and Use suitable for glazing application indicated; two component; chemical curing, non-sagging type; cured Shore A hardness of 15 to 25.
a. Color: As Selected from Manufacturers' standard.
3. Polyurethane Glazing Sealant: ASTM C920, Type S, Grade NS, Class and Use suitable for glazing application indicated; single component, chemical curing, non-staining, non-bleeding, Shore A Hardness Range 20 to 35.

a. Color: As Selected from Manufacturers' standard.

4. Acrylic Sealant: ASTM C920, Type S, Grade NS, Class and Use suitable for glazing application indicated; single component, solvent curing, non-bleeding; cured Shore A hardness of 15 to 25.
   a. Color: As Selected from Manufacturers standard

B. Glazing Gaskets: ASTM C864, resilient neoprene, silicone, polyvinyl chloride extruded shape to suit glazing channel retaining slot.
   1. Type: per glass Manufacturer recommendation
   2. Color: As Selected from Manufacturers standard.

C. Pre-Formed Glazing Tape: Size to suit application.
   1. Preformed butyl compound with integral resilient tube spacing device; 10 to 15 Shore A durometer hardness; coiled on release paper; black color.
      a. Type: per glass Manufacturer recommendation
      b. Butyl Corner Sealant: ASTM C920 single component non-skinning butyl compatible with glazing tape; color to match tape.
   2. Glazing Tape: Closed cell polyvinyl chloride foam, coiled on release paper over adhesive on two sides, maximum water absorption by volume of 2 percent, designed for compression of 25 percent to effect an air barrier and vapor retarder seal.
      a. Type: per glass Manufacturer recommendation.

D. Setting Blocks: ASTM C864, EPDM, 80 to 90 Shore A durometer hardness, length of 0.1 inch for each square foot of glazing or minimum 4-inch x width of glazing rabbet space minus 1/16 inch x height to suit glazing method and pane weight and area.

E. Spacer Shims: ASTM C864, Neoprene, 50 to 60 Shore A durometer hardness, minimum 3 inch long x one half the height of glazing stop x thickness to suit application , self adhesive on one face.

F. Plastic Film: Low emissivity film.

2.4 SOURCE QUALITY CONTROL AND TESTS

A. Provide analysis of glass to Section 01400.

B. Provide shop inspection for safety and insulated glass.

C. Comply with ANSI Z97.1, ASTM E773, ASTM E546, and ASTM E576.

PART 3 - EXECUTION

3.1 EXAMINATION

A. Section 01300 - Administrative Requirements: Coordination and project conditions.

B. Verify openings for glazing are correctly sized and within acceptable tolerance.

C. Verify surfaces of glazing channels or recesses are clean, free of obstructions impeding moisture movement, weeps are clear, and ready to receive glazing.

D. Examine framing glazing, with Installer present, for compliance with the following:
1. Manufacturing and installation tolerances, including those for size, squareness, and offsets at corners
2. Presence and functioning of weep system
3. Minimum required face or edge clearances
4. Effective sealing between joints of glass-framing members.

E. Proceed with installation only after unsatisfactory conditions have been corrected.

3.2 PREPARATION

A. Clean contact surfaces with solvent and wipe dry.

B. Seal porous glazing channels or recesses with substrate compatible primer or sealer.

C. Prime surfaces scheduled to receive sealant.

3.3 INSTALLATION GLAZING, GENERAL

A. Perform installation in accordance with GANA Glazing Manual.
1. Glazing Sealants: Comply with ASTM C1193.
2. Fire Rated Openings: Comply with NFPA 80

B. Comply with combined written instructions of Manufacturers of glass, sealants, gaskets, and other glazing materials, unless more stringent requirements are indicated, including those in referenced glazing publications.

C. Glazing channel dimensions, provide necessary bite on glass, minimum edge and face clearances, and adequate sealant thicknesses, with reasonable tolerances. Adjust as required by Project conditions during installation.

D. Protect glass edges from damage during handling and installation. Remove damaged glass from Project site and legally dispose of off Project site. Damaged glass is glass with edge damage or other imperfections that, when installed, could weaken glass and impair performance and appearance.

E. Install setting blocks in sill rabbets, sized and located to comply with referenced glazing publications, unless otherwise required by glass Manufacturer. Set blocks in thin course of compatible sealant suitable for heel bead.

F. Do not exceed edge pressures stipulated by glass Manufacturers for installing glass lites.

G. Provide spacers for glass lites where length plus width is larger than 50 inches as follows:
1. Locate spacers directly opposite each other on both inside and outside faces of glass. Install correct size and spacing to preserve required face clearances, unless

gaskets and glazing tapes are used that have demonstrated ability to maintain required face clearances and to comply with system performance requirements.

2. Provide 1/8-inch minimum bite of spacers on glass and use thickness equal to sealant width. With glazing tape, use thickness slightly less than final compressed thickness of tape.

H. Provide edge blocking where indicated or needed to prevent glass lites from moving sideways in glazing channel, as recommended in writing by glass Manufacturer and according to requirements in referenced glazing publications.

I. Set glass lites in each series with uniform pattern, draw, bow, and similar characteristics.

J. Where wedge-shaped gaskets are driven into one side of channel to pressurize sealant or gasket on opposite side, provide adequate anchorage so gasket cannot walk out when installation is subjected to movement.

K. Square cut wedge-shaped gaskets at corners and install gaskets in a manner recommended by gasket Manufacturer to prevent corners from pulling away; seal corner joints and butt joints with sealant recommended by gasket Manufacturer.

3.4 TAPE GLAZING

A. Position tapes on fixed stops so that, when compressed by glass, their exposed edges are flush with or protrude slightly above sightline of stops.

B. Install tapes continuously, but not necessarily in one continuous length. Do not stretch tapes to make them fit opening.

C. Cover vertical framing joints by applying tapes to heads and sills first and then to jambs. Cover horizontal framing joints by applying tapes to jambs and then to heads and sills.

D. Place joints in tapes at corners of opening with adjoining lengths butted together, not lapped. Seal joints in tapes with compatible sealant approved by tape Manufacturer.

E. Do not remove release paper from tape until just before each glazing unit is installed.

F. Apply heel bead of elastomeric sealant where indicated.

G. Center glass lites in openings on setting blocks and press firmly against tape by inserting dense compression gaskets formed and installed to lock in place against faces of removable stops. Start gasket applications at corners and work toward centers of openings.

H. Apply cap bead of elastomeric sealant over exposed edge of tape.

3.5 GASKET GLAZING (DRY)

A. Fabricate compression gaskets in lengths recommended by gasket Manufacturer to fit openings exactly, with allowance for stretch during installation.

B. Center glass lites in openings on setting blocks and press firmly against soft compression gasket by inserting dense compression gaskets formed and installed to lock in place against faces of removable stops. Start gasket applications at corners and work toward centers of openings. Compress gaskets to produce a weathertight seal without developing bending stresses in glass. Seal gasket joints with sealant recommended by gasket Manufacturer.

C. Install gaskets so they protrude past face of glazing stops.

3.6 FIELD QUALITY CONTROL

A. Section 01400 - Quality Requirements: Testing and Inspection Services and 01700 - Execution Requirements: Testing, adjusting, and balancing.

B. Monitor quality of glazing.

3.7 CLEANING

A. Section 01700 - Execution Requirements: Final cleaning.

B. Remove glazing materials from finish surfaces.

C. Remove labels after Work is complete.

D. Clean glass and adjacent surfaces.

3.8 PROTECTION OF INSTALLED CONSTRUCTION

A. Section 01700 - Execution Requirements: Protecting installed construction.

B. Protect exterior glass from damage immediately after installation by attaching crossed streamers to framing held away from glass. Do not apply markers to glass surface. Remove nonpermanent labels, and clean surfaces.

C. Protect glass from contact with contaminating substances resulting from construction operations.

D. Remove and replace glass that is broken, chipped, cracked, or abraded or that is damaged from natural causes, accidents, and vandalism, during construction period.

E. Wash glass on both exposed surfaces in each area of Project not more than four days before date scheduled for inspections that establish date of Substantial Completion. Wash glass as recommended in writing by glass Manufacturer.

3.9 SCHEDULE

A. Glazing Schedule:

1. Aluminum Windows: 1-inch (25-mm) thick insulating unit tinted glass.
2. Storefront: 1-inch (25-mm) thick insulating unit, tinted tempered glass.
3. Entrances: 1-inch (16-mm) thick insulating unit, tinted tempered glass.
4. Mirrors: 1/4-inch (6-mm) plate glass.
5. Doors: Tempered glass.

END OF SECTION

SECTION 09111
NON-LOAD-BEARING METAL FRAMING SYSTEM

PART 1 - GENERAL

1.1 SUMMARY

A. Section includes metal stud framing and accessories at interior and exterior locations.

B. Related Sections:
1. Section 05400 - Cold-Formed Metal Framing: Structural load bearing metal stud framing
2. Section 06114 - Wood Blocking and Curbing: Rough wood blocking within stud framing
3. Section 07260 - Vapor Retarders
4. Section 07270 - Air Barriers
5. Section 07213 - Batt Insulation: Insulation between framing members
6. Section 09260 - Gypsum Board Assemblies: Metal studs for partitioning.

1.2 REFERENCES

A. ASTM International:
1. ASTM A123/A123M - Standard Specification for Zinc (Hot-Dip Galvanized) Coatings on Iron and Steel Products
2. ASTM A591/A591M - Standard Specification for Steel Sheet, Electrolytic Zinc-Coated, for Light Coating Mass Applications
3. ASTM A653/A653M - Standard Specification for Steel Sheet, Zinc-Coated (Galvanized) or Zinc-Iron Alloy-Coated (Galvannealed) by the Hot-Dip Process
4. ASTM C645 - Standard Specification for Nonstructural Steel Framing Members
5. ASTM C754 - Standard Specification for Installation of Steel Framing Members to Receive Screw-Attached Gypsum Panel Products
6. ASTM C1002 - Standard Specification for Steel Drill Screws for the Application of Gypsum Panel Products or Metal Plaster Bases.

B. National Association of Architectural Metal Manufacturers:
1. NAAMM ML/SFA 540 - Lightweight Steel Framing Systems Manual.

C. SSPC: The Society for Protective Coatings:
1. SSPC Paint 20 - Zinc-Rich Primers (Type I - Inorganic and Type II - Organic).

1.3 SYSTEM DESCRIPTION

A. Exterior Wall: Metal stud framing system infill, with exterior sheathing specified in Section 09260, batt insulation specified in Section 07213, interior gypsum board specified in Section 09260.

B. Exterior Loads: Design and size components to withstand loads caused by positive and negative pressure of wind acting normal to plane of wall as calculated in accordance with building code.

C. Interior Walls: Metal stud framing system with batt type acoustic insulation specified in Section 07213, interior gypsum board specified in Section 09260.

D. Maximum Allowable Deflection: 1: 180 span for interior painted walls; L/720 span for exterior masonry and stucco back-up; L/360 for ceramic tile wall back up.

E. Wall System:
1. Design to provide for movement of components without damage, failure of joint seals, undue stress on fasteners, or other detrimental effects when subject to seasonal or cyclic day/night temperature ranges.
2. Design system to accommodate construction tolerances, deflection of building structural members, and clearances of intended openings.

1.4 SUBMITTALS

A. Section 01330 - Submittal Procedures: Submittal procedures.

B. Shop Drawings:
1. Indicate component details, stud layout, framed openings, anchorage to structure, type and location of fasteners, and accessories or items required of other related work.
2. Describe method for securing studs to tracks, and for blocking and reinforcement to framing connections.

C. Product Data: Submit data describing standard framing member materials and finish, product criteria, load charts, and limitations.

D. Manufacturer's Installation Instructions: Submit special procedures and perimeter conditions requiring special attention.

1.5 QUALITY ASSURANCE

A. Perform Work in accordance with ASTM C754.

B. Form, fabricate, install, and connect components in accordance with NAAMM ML/SFA 540.

C. Furnish framing materials in accordance with SSMA - Product Technical Information.

D. Maintain one copy of each document on site.

1.6 QUALIFICATIONS

A. Manufacturer: Company specializing in manufacturing products specified in this section with minimum three years documented experience.
1. Framing Manufacturer: Current member of Steel Stud Manufacturers Association.

B. Installer: Company specializing in performing Work of this section with minimum three years documented experience.

C. Design structural elements under direct supervision of Professional Engineer experienced in design of this Work and licensed in State of Texas.

1.7 MOCKUP

A. Section 01400 - Quality Requirements: Requirements for mockup.

B. Construct corner mockup, 10’ x 10’ x 10’, including stud wall framing including insulation, sheathing, window frame, and interior and exterior finish specified in other sections. Coordinate with installation of associated work of Sections 05500, 07260, 07260, and 09260.

C. Locate where directed by Architect/Engineer.

D. Incorporate accepted mockup as part of Work.

1.8 PRE-INSTALLATION MEETINGS

A. Section 01300 - Administrative Requirements: Pre-installation meeting.

B. Convene minimum two weeks prior to commencing work of this section.

1.9 COORDINATION

A. Section 01300 - Administrative Requirements: Coordination and project conditions.

B. Coordinate placement of components within stud framing system.

PART 2 - PRODUCTS

2.1 METAL FRAMING SYSTEM

A. Manufacturers:
1. Clark Steel Framing Systems
2. Dale / Incor
3. Dietrich Metal Framing
4. Steel Construction Systems
5. Substitutions: Section 01600 - Product Requirements.

2.2 COMPONENTS

A. Components: ASTM C645.

B. Studs: ASTM A653/A653M, non-load bearing rolled steel, channel shaped, punched for utility access, as follows:
1. Depth: 1-5/8, 2-1/2, 3-5/8, and 6 inches
2. Thickness: 20 gauge, minimal and heavier gauges per Manufacturer requirements for height and loads
3. Refer to structural drawings for additional stud gauges.

C. Runner Tracks: Same material and thickness as studs or heavier, bent leg retainer notched to receive studs.

D. Slip-Type slotted head track: Provide one of the following:
1. Deflection Track: Steel sheet top runner manufactured to prevent cracking of finishes applied to interior partition framing resulting from deflection of structure above; in thickness not less than indicated for studs and in width to accommodate depth of studs.
a. Standard leg 2 ½" with 1 ½" slot
2. Double-Runner System: ASTM C 645 top runners, inside runner with 2-inch-deep flanges in thickness not less than indicated for studs and fastened to studs, and outer runner sized to friction fit inside runner.

E. Furring and Bracing Members: Of same material as studs; thickness to suit purpose.

F. Fasteners: ASTM C1002, self drilling, self tapping screws.

G. Sheet Metal Backing: 1/8" thick cold rolled steel – in wall anchor plates galvanized steel for reinforcement of toilet accessories.

H. Anchorage Devices: Power actuated.

I. Acoustic Sealant: As specified in Section 07900.

J. Touch-Up Primer for Galvanized Surfaces: SSPC-Paint 20 Type II Organic zinc rich.

2.3 SHOP FINISHING

A. Studs, Tracks and Headers: Galvanize to G60 coating class.

B. Accessories: Same finish as framing members, G60 coating class.

PART 3 - EXECUTION

3.1 EXAMINATION

A. Section 01300 - Administrative Requirements: Coordination and project conditions.

B. Verify rough-in utilities are in proper location.

C. Examine areas and substrates, with Installer present, and including welded hollow-metal frames, and structural framing, for compliance with requirements and other conditions affecting performance.
1. Proceed with installation only after unsatisfactory conditions have been corrected.

3.2 INSTALLATION

A. Align and secure top and bottom runners at not more 24 inches oc.

B. Achieve air tight seal between runners and substrate with acoustic sealant in conjunction with Section 07270.

C. Achieve air tight seal between studs and adjacent vertical surfaces with acoustic sealant in conjunction with Section 07270.

D. Fit runners under and above openings; secure intermediate studs to same spacing as wall studs.

E. Install studs vertically at 16 inches oc.

F. Align stud web openings horizontally.

G. Secure studs to tracks using fastener method. Do not weld.

H. Stud splicing not permissible.

I. Fabricate corners using minimum of three studs.

J. Double stud at wall openings, door and window jambs, not more than 2 inches from each side of openings.

K. Brace stud framing system rigid.

L. Coordinate erection of studs with requirements of door frames and window frames; install supports and attachments.

M. Door Openings: Screw vertical studs at jambs to jamb anchor clips on door frames; install runner track section (for cripple studs) at head and secure to jamb studs.
1. Install two studs at each jamb, unless otherwise indicated.
2. Extend jamb studs through suspended ceilings and attach to underside of overhead structure.

N. Coordinate installation of wood bucks, anchors, and wood blocking with electrical and mechanical work to be placed within or behind stud framing.

O. Blocking: Secure blocking to studs. Install blocking for support of plumbing fixtures, toilet partitions, wall cabinets, toilet accessories and opening frames.

P. Refer to Drawings for indication of partitions extending to finished ceiling only and for partitions extending through ceiling to structure above. Maintain clearance under structural building members to avoid deflection transfer to studs. Install extended leg ceiling runners.
1. Slip-Type Head Joints: Where framing extends to overhead structural supports, install to produce joints at tops of framing systems that prevent axial loading of finished assemblies.

Q. Coordinate placement of insulation in stud spaces after stud frame erection.

3.3 INSTALLING SUSPENSION SYSTEMS

A. Install suspension system components in sizes and spacings as required, but not less than those required by referenced installation standards for assembly types and other assembly components indicated.

B. Isolate suspension systems from building structure where they abut or are penetrated by building structure to prevent transfer of loading imposed by structural movement.

C. Suspend hangers from building structure as follows:
   1. Install hangers plumb and free from contact with insulation or other objects within ceiling plenum that are not part of supporting structural or suspension system.
      a. Splay hangers only where required to miss obstructions and offset resulting horizontal forces by bracing, countersplaying, or other equally effective means.
   2. Where width of ducts and other construction within ceiling plenum produces hanger spacings that interfere with locations of hangers required to support standard suspension system members, install supplemental suspension members and hangers in the form of trapezes or equivalent devices.
      a. Size supplemental suspension members and hangers to support ceiling loads within performance limits established by referenced installation standards.
   3. Wire Hangers: Secure by looping and wire tying, either directly to structures or to inserts, eye screws, or other devices and fasteners that are secure and appropriate for substrate, and in a manner that will not cause hangers to deteriorate or otherwise fail.
   4. Flat Hangers: Secure to structure, including intermediate framing members, by attaching to inserts, eye screws, or other devices and fasteners that are secure and appropriate for structure and hanger, and in a manner that will not cause hangers to deteriorate or otherwise fail.
   5. Do not attach hangers to steel roof deck.
   6. Do not connect or suspend steel framing from ducts, pipes, or conduit.

3.4 ERECTION TOLERANCES

A. Section 01400 - Quality Requirements: Tolerances.

B. Maximum Variation From Indicated Position: 1/8 inch in 10 feet.

C. Maximum Variation From Plumb: 1/8 inch in 10 feet.

END OF SECTION

SECTION 09260
GYPSUM BOARD ASSEMBLIES

PART 1 - GENERAL

1.1 SUMMARY

A. Section includes gypsum board and joint treatment; gypsum sheathing; cementitious backer board; acoustic insulation; and textured finish.

B. Related Sections:
1. Section 05400 - Cold Formed Metal Framing
2. Section 06114 - Wood Blocking and Curbing: Wood blocking for support of fixtures
3. Section 07213 - Batt Insulation: Acoustic and Thermal insulation
4. Section 08310 - Access Doors and Panels: Metal access panels
5. Section 10800: Product requirements for frames for recessed washroom accessories for placement by this section.

1.2 REFERENCES

A. ASTM International:
1. ASTM C36 - Standard Specification for Gypsum Wallboard
2. ASTM C79/C79M - Standard Specification for Gypsum Sheathing Board
3. ASTM C442 - Standard Specification for Gypsum Backing Board and Coreboard
4. ASTM C475 - Standard Specification for Joint Compound and Joint Tape for Finishing Gypsum Board
5. ASTM C514 - Standard Specification for Nails for the Application of Gypsum Board
6. ASTM C557 - Standard Specification for Adhesives for Fastening Gypsum Wallboard to Wood Framing
7. ASTM C630/C630M - Standard Specification for Water-Resistant Gypsum Backing Board
8. ASTM C645 - Standard Specification for Nonstructural Steel Framing Members
9. ASTM C665 - Standard Specification for Mineral-Fiber Blanket Thermal Insulation for Light Frame Construction and Manufactured Housing
10. ASTM C754 - Standard Specification for Installation of Steel Framing Members to Receive Screw-Attached Gypsum Panel Products
11. ASTM C840 - Standard Specification for Application and Finishing of Gypsum Board
12. ASTM C931/C931M - Standard Specification for Exterior Gypsum Soffit Board
13. ASTM C1002 - Standard Specification for Steel Drill Screws for the Application of Gypsum Panel Products or Metal Plaster Bases
14. ASTM C1280 - Standard Specification for Application of Gypsum Sheathing
15. ASTM E90 - Standard Test Method for Laboratory Measurement of Airborne Sound Transmission Loss of Building Partitions and Elements
16. ASTM E119 - Standard Test Methods for Fire Tests of Building Construction and Materials.

B. Gypsum Association:
   1. GA 214 - Recommended Levels of Gypsum Board Finish
   2. GA 216 - Application and Finishing of Gypsum Board
   3. GA 600 - Fire Resistance Design Manual Sound Control.

C. Underwriters Laboratories Inc.:
   1. UL - Fire Resistance Directory.

D. Intertek Testing Services (Warnock Hersey Listed):
   1. WH - Certification Listings.

1.3 PERFORMANCE REQUIREMENTS

A. Conform to applicable code for fire rated assemblies in conjunction with Section 09111 as follows:
   1. Fire Rated Partitions: Listed assembly by UL
      a. 1 hour wall; UL No. U465
      b. 2 hour wall; UL No. U411
      c. 3 hour wall; UL No. U435.

B. Acoustic Attenuation for Interior Partitions: in accordance with ASTM E90.

1.4 SUBMITTALS

A. Section 01330 - Submittal Procedures: Submittal procedures.

B. Shop Drawings: Indicate special details associated with fireproofing and acoustic seals.

C. Product Data: Submit data on metal framing, gypsum board, joint tape, texture and acoustic accessories.

D. Samples: Submit two samples of gypsum board, 12 x 12 inch in size illustrating finish and texture.

E. Submit Manufacturer's installation instructions under provisions of Section 01340.

F. Coordinate this work with the installation of batt insulation and mechanical and electrical work which is to be placed at or within framing. Allow such items to be installed or incorporated, if required, before start of gypsum board installation.

G. Qualifications Data: For Installer of Gypsum Board products.

1.5 QUALITY ASSURANCE

A. Perform Work in accordance with ASTM C840 and ASTM C1280.

B. Maintain one copy of each document on site.

1.6 QUALIFICATIONS

A. Manufacturer: Company specializing in manufacturing products specified in this section with minimum three years documented experience.

B. Installer: Company specializing in performing Work of this section with minimum three years documented experience.

1.7 DELIVERY, STORAGE AND HANDLING

A. General: Comply with Section 01400 – Quality Requirements

B. Ordering: Comply with Manufacturer's ordering instructions and lead time requirements to avoid construction delays.

C. Packing, Shipping, Handling and Unloading: Per Manufacturer.

D. Delivery: Deliver materials in Manufacturer's original identification labels intact.

E. Storage and Protection: Store materials protected from exposure to harmful weather conditions and at temperature conditions recommended by Manufacturer. Store materials in clean, dry, sheltered area, off ground, until used. Stack panels flat to prevent sagging

1.8 MOCKUP

A. Section 01400 - Quality Requirements: Requirements for mockup.

B. Construct mock-up, including interior wall and ceiling system illustrating surface finish and texture.

C. Locate where directed by Architect/Engineer.

D. Incorporate accepted mockup as part of Work.

1.9 PRE-INSTALLATION MEETINGS

A. Section 01300 - Administrative Requirements: Pre-installation meeting.

B. Convene minimum two weeks prior to commencing work of this section.

PART 2 - PRODUCTS

2.1 GYPSUM BOARD ASSEMBLIES

A. Manufacturers:
1. Celotex Building Products
2. G-P Gypsum Corp.
3. National Gypsum Co.
4. United States Gypsum Co.
5. Substitutions: Section 01600 - Product Requirements.

2.2 COMPONENTS

A. Framing Materials:
1. Studs and Tracks: Per Section 09110
2. Furring, Framing, and Accessories: Specified in Section 09110
3. Fasteners: ASTM C1002
4. Anchorage to Substrate: Tie wire, screws, and other metal supports, of type and size to suit application; to rigidly secure materials in place.

B. Gypsum Board Materials:
1. Fire Rated Gypsum Board: ASTM C36; fire resistive type, UL or WH rated; 5/8 inch thick, maximum available length in place; ends square cut, tapered and beveled edges.
2. FIBEROCK® Brand Aqua-Tough™ Interior Panels
3. FIBEROCK® Brand VHI Abuse-Resistant Fiber-Reinforced Gypsum Interior Panels
4. Gypsum Sheathing Board: ASTM C79/C79M; moisture resistant and fire resistant type; 5/8 inch thick, maximum available size in place; ends square cut, tongue and grooved edges; water repellent paper faces.
5. 2 inch wide, coated glass fiber tape for joints and corners.
6. Air Barrier: Tyvek or 15# felts

2.3 ACCESSORIES

A. Acoustic Insulation: ASTM C665; See Section 07900

B. Acoustic Sealant: Non-hardening, non-skinning, for use in conjunction with gypsum board.

C. Interior Trim: ASTM C 1047.
1. Material: Galvanized or aluminum-coated steel sheet or rolled zinc.
2. Shapes:
   a. Cornerbead
   b. U-Bead: J-shaped; L-Bead; exposed short flange does not receive joint compound
   c. Expansion (control) joint.

D. Joint Materials: ASTM C475; reinforcing tape, joint compound, adhesive, and water. For each coat use formulation that is compatible with other compounds applied on previous or for successive coats.
1. Prefilling: At open joints and damaged surface areas, use setting-type taping compound.
2. Embedding and First Coat: For embedding tape and first coat on joints, fasteners, and trim flanges, use drying-type, all-purpose compound.
3. Fill Coat: For second coat, use drying-type, all-purpose compound.
4. Finish Coat: For third coat, use drying-type, all-purpose compound.

E. Textured Finish Materials: Latex based texturing material, containing fine aggregate, low / no V.O.C. type.

F. Fasteners: ASTM C1002, Type S12.

PART 3 - EXECUTION

3.1 EXAMINATION

A. Section 01300 - Administrative Requirements: Coordination and project conditions.

B. Verify site conditions are ready to receive work and opening dimensions are as instructed by Manufacturer.

3.2 INSTALLATION

A. Metal Stud Installation:
1. Install studs in accordance with ASTM C754.
2. Metal Stud Spacing: 16 inches on center.
3. Refer to Drawings for indication of partitions extending stud framing through ceiling to structure above. Maintain clearance under structural building members to avoid deflection transfer to studs. Provide extended leg ceiling runners.
4. Door Opening Framing: Install double studs at door frame jambs. Install stud tracks on each side of opening, at frame head height, and between studs and adjacent studs. Install control joints at door head.
5. Blocking: Bolt or screw steel channels to studs. Install blocking for support of plumbing fixtures, toilet partitions, wall cabinets, and toilet accessories.

B. Ceiling Framing Installation:
1. Install in accordance with ASTM C754.
2. Coordinate location of hangers with other work.
3. Install ceiling framing independent of walls, columns, and above ceiling work.
4. Reinforce openings in ceiling suspension system which interrupt main carrying channels or furring channels, with lateral channel bracing. Extend bracing minimum 24 inches past each end of openings.
5. Laterally brace entire suspension system.

C. Acoustic Accessories Installation:
1. Place acoustic insulation in partitions tight within spaces, around cut openings, behind and around electrical and mechanical items within or behind partitions, and tight to items passing through partitions.
2. Install acoustic sealant within partitions.

D. Gypsum Board Installation:
1. Install gypsum board in accordance with GA-216 and GA-600.
2. Erect single layer standard gypsum board in most economical direction, with ends and edges occurring over firm bearing.
3. Erect single layer fire rated gypsum board vertically, with edges and ends occurring over firm bearing.
4. Erect exterior gypsum sheathing in accordance with ASTM C1280, horizontally, with edges butted and ends occurring over firm bearing.
5. Use screws when fastening gypsum board to metal furring or framing.

6. Double Layer Applications: Secure second layer to first with fasteners. Place second layer perpendicular to first layer. Offset joints of second layer from joints of first layer.
7. Erect exterior gypsum soffit board perpendicular to supports, with staggered end joints over supports.
8. Treat cut edges and holes in moisture resistant gypsum board with sealant.
9. Place control joints consistent with lines of building spaces as required by gypsum board Manufacturer requirements.
10. Place corner beads at external corners. Use longest practical length. Place edge trim where gypsum board abuts dissimilar materials.
11. Install cementitious backing board over metal studs.

E. Joint Treatment:
1. Finish in accordance with GA-214 Level 4. Erect in accordance with Manufacturer's instructions.
2. Tape, fill, and sand exposed joints, edges, and corners to produce smooth surface ready to receive finishes.
3. Feather coats on to adjoining surfaces so that camber is maximum 1/32 inch.
4. Taping, filling, and sanding is not required at surfaces behind adhesive applied ceramic tile.

F. Texture Finish: Spray apply finish texture coating, light sand to orange peel finish.

3.3 ERECTION TOLERANCES

A. Section 01400 - Quality Requirements: Tolerances.

B. Maximum Variation of Finished Gypsum Board Surface from Flat Surface: 1/8 inch in 10 feet.

END OF SECTION

SECTION 09300
TILE

PART 1 - GENERAL

1.1 SUMMARY

A. Section includes ceramic tile for floor and wall applications; cementitious backer board as tile substrate; thresholds at door openings; and ceramic accessories.

B. Related Sections:
1. Section 03350 - Concrete Finishing: Troweling of floor slab for tile application
2. Section 07900 - Joint Sealers
3. Section 15410 - Plumbing Fixtures: Shower receptor.

1.2 REFERENCES

A. American National Standards Institute:
1. ANSI A108.1 - Installation of Ceramic Tile, A collection
2. ANSI A108.10 - Specifications for Installation of Grout in Tilework
3. ANSI A108.1A - Specifications for Installation of Ceramic Tile in the Wet-Set Method with Portland Cement Mortar
4. ANSI A108.1B - Specifications for Installation of Ceramic Tile on a Cured Portland Cement Mortar Setting Bed with Dry-Set or Latex Portland Cement Mortar
5. ANSI A108.1C - Specifications for Contractors Option: Installation of Ceramic Tile in the Wet-Set Method with Portland Cement Mortar -or- Installation of Ceramic Tile on a Cured Portland Cement Mortar Setting Bed with Dry-Set or Latex Portland Cement Mortar
6. ANSI A108.4 - Specifications for Ceramic Tile Installed with Organic Adhesives or Water-Cleanable Tile Setting Epoxy Adhesive
7. ANSI A108.5 - Specifications for Ceramic Tile Installed with Dry-Set Portland Cement Mortar or Latex-Portland Cement Mortar
8. ANSI A118.1 - Standard Specification for Dry-Set Portland Cement Mortar
9. ANSI A118.4 - Latex-Portland Cement Mortar
10. ANSI A118.6 - Ceramic Tile Grouts
11. ANSI A118.8 - Modified Epoxy Emulsion Mortar/Grout
12. ANSI A118.9 - Test Methods and Specifications for Cementitious Backer Units
13. ANSI A136.1 - Organic Adhesives for Installation of Ceramic Tile
14. ANSI A137.1 - Ceramic Tile.

B. Tile Council of America:
1. TCA - Handbook for Ceramic Tile Installation.

1.3 SUBMITTALS

A. Section 01330 - Submittal Procedures: Submittal procedures.

B. Shop Drawings: Indicate tile layout, patterns, color arrangement, perimeter conditions, junctions with dissimilar materials, control and expansion joints, thresholds, ceramic accessories, and setting details.

C. Samples for Initial Selection: For each type of tile and grout indicated. Include Samples of accessories involving color selection.

D. Product Data: Submit instructions for using grouts and adhesives.

E. Samples for Verification:
1. Full-size units of each type and composition of tile and for each color and finish required.
2. Stone thresholds in 6-inch lengths.

F. Samples: Submit mounted tile and grout on one plywood panels, illustrating pattern, color variations, and grout joint size variations.

G. Manufacturer's Certificate: Certify Products meet or exceed specified requirements.

H. Qualifications Data: For Installer of Tile products.

1.4 CLOSEOUT SUBMITTALS

A. Section 01700 - Execution Requirements: Closeout procedures.

B. Operation and Maintenance Data: Submit recommended cleaning methods, cleaning materials, stain removal methods, and polishes and waxes.

1.5 QUALITY ASSURANCE

A. Perform Work in accordance with TCA Handbook and ANSI A108 Series/A118 Series.

B. Source Limitations for Tile: Obtain all tile of same type and color or finish from one source or producer.

C. Obtain tile from same production run and of consistent quality in appearance and physical properties for each contiguous area.

D. Source Limitations for Setting and Grouting Materials: Obtain ingredients of a uniform quality for each mortar, adhesive, and grout component from a single Manufacturer and each aggregate from one source or producer.

E. Source Limitations for Other Products: Obtain each of the following products specified in this Section through one source from a single Manufacturer for each product:
1. Stone thresholds
2. Waterproofing
3. Joint sealants.

F. Maintain one copy of each document on site.

1.6 QUALIFICATIONS

A. Manufacturer: Company specializing in manufacturing products specified in this section with minimum three years documented experience.

B. Installer: Company specializing in performing Work of this section with minimum three years documented experience.

1.7 MOCKUP

A. Section 01400 - Quality Requirements: Requirements for mockup.

B. Construct tile mock-up, 4 feet long by 4 feet wide, with finish grout, and specified accessories.

C. Locate where directed by Architect/Engineer.

D. Incorporate accepted mockup as part of Work.

1.8 PRE-INSTALLATION MEETINGS

A. Section 01300 - Administrative Requirements: Pre-installation meeting.

B. Convene minimum two weeks prior to commencing work of this section.

1.9 DELIVERY, STORAGE, AND HANDLING

A. Section 01600 - Product Requirements: Product storage and handling requirements.

B. Protect adhesives and grouts from freezing or overheating.

C. Deliver and store packaged materials in original containers with seals unbroken and labels intact until time of use. Comply with requirement in ANSI A137.1 for labeling sealed tile packages.

D. Store tile and cementitious materials on elevated platforms, under cover, and in a dry location.

E. Store aggregates where grading and other required characteristics can be maintained and contamination avoided.

F. Store liquid latexes in unopened containers and protected from freezing.

G. Handle tile that has temporary protective coating on exposed surfaces to prevent coated surfaces from contacting backs or edges of other units. If coating does contact bonding surfaces of tile, remove coating from bonding surfaces before setting tile.

1.10 ENVIRONMENTAL REQUIREMENTS

A. Section 01600 - Product Requirements.

B. Do not install adhesives and grouts in unventilated environment.

C. Maintain ambient and substrate temperature of 50 degrees F during installation of mortar materials.

1.11 EXTRA MATERIALS

A. Section 01700 - Execution Requirements: Spare parts and maintenance products.

B. Furnish extra materials described below that match products installed and that are packaged with protective covering for storage and identified with labels describing contents.
1. Tile and Trim Units: Furnish quantity of full-size units equal to 3 percent of amount installed, for each type, composition, color, pattern, and size indicated.

PART 2 - PRODUCTS

2.1 TILE

A. Static Coefficient of Friction: For tile installed on walkway surfaces, provide products with the following values as determined by testing identical products per ASTM C 1028:
1. Level Surfaces: Minimum 0.6.

B. Manufacturers:
1. American Olean Tile Co.
2. Dal-Tile International
3. United States Ceramic Tile
4. Substitutions: Section 01600 - Product Requirements.

2.2 COMPONENTS

A. Ceramic Floor Tile: ANSI A137.1, conforming to the following:
1. Moisture Absorption: 0 to 0.5 percent
2. Size: 2 x 2 x ¼ inch
3. Shape: Square
4. Edge: Cushioned
5. Surface Finish: Unglazed, Slip resistant
6. Color: As selected from Manufacturers standard, Price group 1 and 2
7. Pattern: submit pattern

B. Ceramic Wall Tile: ANSI A137.1, conforming to the following:
1. Moisture Absorption: 0.5 to 3.0 percent
2. Size: 4 x 4 x 5/16 inch
3. Shape: Square
4. Edge: Cushioned
5. Internal Corner: Coved
6. External Corner: Bull nosed
7. Surface Finish: Matte glazed
8. Color: As selected from Manufacturers standard, Price group 1 and 2

9. Pattern: 3 colors, submit pattern.

C. Base: Match floor tile for moisture absorption, surface finish, and color:
1. Length: 4 inch
2. Height: 4 inch
3. Top Edge: Cushioned
4. Internal Corner: Cove
5. External Corner: Bull nosed
6. Color: As selected from Manufacturers standard, Price group 1 and 2
7. Pattern: submit pattern.

D. Wainscot Cap: Match wall tile for moisture absorption, surface finish, and color, 4 x 8 inch, bull nosed top edge.

2.3 ACCESSORIES

A. Adhesive Materials:
1. Organic Adhesive: ANSI A136.1, thin-set bond type
   a. Type I Moisture Resistant
2. Epoxy Adhesive: ANSI A118.3, thin-set bond type
3. Tile Setting Adhesive: Elastomeric, waterproof, and liquid applied.

B. Mortar Materials:
1. Mortar Bed Materials: Portland cement, sand, latex additive, and water.
2. Mortar Bond Coat Materials:
   a. Latex-Portland Cement type: exceeds ANSI A118.4
   b. Prepackaged dry-mortar mix containing dry, redispersible, ethylene vinyl acetate additive to which only water must be added at Project site
   c. For wall applications, provide nonsagging mortar that complies with Paragraph F-4.6.1 in addition to the other requirements in ANSI A118.4.

C. Grout Materials: Polymer-Modified Tile Grout: ANSI A118.7, color as selected from Manufacturers' standard range.
1. Fortified Polymer Type: Ethylene vinyl acetate, in dry, redispersible form, prepackaged with other dry ingredients.
   a. Unsanded grout mixture for joints 1/8 inch and narrower
   b. Sanded grout mixture for joints 1/8 inch and wider.

D. Cleavage Membrane: 4 mil thick polyethylene film.

E. Reinforcing Mesh: 2 x 2 inch size weave of 16/16 wire size; welded fabric, galvanized.

F. Cementitious Backer Board: See section 09260.

G. Thresholds: Marble type, honed finish, size by full width of wall or frame opening, beveled both sides, radiused edges from bevel to vertical face.
1. Fabricate to sizes and profiles as required to provide transition between adjacent floor finishes.

2. Bevel edges at 1:2 slope, aligning lower edge of bevel with adjacent floor finish. Limit height of bevel to 1/2 inch or less, and finish bevel to match face of threshold.
3. Description: Uniform, fine- to medium-grained white stone with gray veining.

PART 3 - EXECUTION

3.1 EXAMINATION

A. Section 01300 - Administrative Requirements: Coordination and project conditions.

B. Verify surfaces are ready to receive work.

C. Examine substrates, areas, and conditions where tile will be installed, with Installer present, for compliance with requirements for installation tolerances and other conditions affecting performance of installed tile.
1. Verify that substrates for setting tile are firm; dry; clean; free of oil, waxy films, and curing compounds; and within flatness tolerances required by referenced ANSI A108 Series of tile installation standards for installations indicated.
2. Verify that installation of anchors, recessed frames, electrical and mechanical units of work, and similar items located in or behind tile has been completed before installing tile.
3. Verify that joints and cracks in tile substrates are coordinated with tile joint locations; if not coordinated, adjust joint locations in consultation with Architect.

D. Proceed with installation only after unsatisfactory conditions have been corrected.

3.2 PREPARATION

A. Protect surrounding work from damage.

B. Vacuum clean surfaces and damp clean.

C. Remove coatings, including curing compounds and other substances that contain soap, wax, oil, or silicone, that are incompatible with tile-setting materials.

D. Provide concrete substrates for tile floors installed with thin-set mortar that comply with flatness tolerances specified in referenced ANSI A108 Series of tile installation standards.
1. Fill cracks, holes, and depressions with trowelable leveling and patching compound according to tile-setting material Manufacturer's written instructions. Use product specifically recommended by tile-setting material Manufacturer.
2. Remove protrusions, bumps, and ridges by sanding or grinding. Level existing substrate surfaces to acceptable flatness tolerances.

E. Blending: For tile exhibiting color variations within ranges selected during Sample submittals, verify that tile has been factory blended and packaged so tile units taken from one package show same range of colors as those taken from other packages and

match approved Samples. If not factory blended, either return to Manufacturer or blend tiles at Project site before installing.

3.3 INSTALLATION, GENERAL

A. ANSI Tile Installation Standards: Comply with parts of ANSI A108 Series "Specifications for Installation of Ceramic Tile" that apply to types of setting and grouting materials and to methods indicated in ceramic tile installation schedules.

B. TCA Installation Guidelines: TCA's "Handbook for Ceramic Tile Installation." Comply with TCA installation methods indicated in ceramic tile installation schedules.

C. Extend tile work into recesses and under or behind equipment and fixtures to form complete covering without interruptions, unless otherwise indicated. Terminate work neatly at obstructions, edges, and corners without disrupting pattern or joint alignments.

D. Accurately form intersections and returns. Perform cutting and drilling of tile without marring visible surfaces. Carefully grind cut edges of tile abutting trim, finish, or built-in items for straight aligned joints. Fit tile closely to electrical outlets, piping, fixtures, and other penetrations so plates, collars, or covers overlap tile.

E. Jointing Pattern: Lay tile in grid pattern, unless otherwise indicated. Align joints when adjoining tiles on floor, base, walls, and trim are same size. Lay out tile work and center tile fields in both directions in each space or on each wall area. Adjust to minimize tile cutting. Provide uniform joint widths, unless otherwise indicated.
   1. For tile mounted in sheets, make joints between tile sheets same width as joints within tile sheets so joints between sheets are not apparent in finished work.

F. Expansion / Control Joints: Locate expansion joints and other sealant-filled joints, including control, contraction, and isolation joints, where indicated during installation of setting materials, mortar beds, and tile. Do not saw-cut joints after installing tiles.
   1. Locate joints in tile surfaces directly above joints in concrete substrates.
   2. Prepare joints and apply sealants to comply with requirements in Division 7 Section "Joint Sealants."
   3. Keep control joints free of adhesive or grout. Apply sealant to joints.

G. Grout tile to comply with requirements of the following tile installation standards:
   1. For ceramic tile grouts (latex-portland cement grouts), comply with ANSI A108.10.
   2. Allow tile to set for a minimum of 48 hours prior to grouting.

H. Where indicated, install cementitious backer units and treat joints to comply with ANSI A108.11 and Manufacturer's written instructions for type of application indicated.

3.4 WATERPROOFING AND CRACK-SUPPRESSION MEMBRANE INSTALLATION

A. Install waterproofing to comply with ANSI A108.13 and waterproofing Manufacturer's written instructions to produce waterproof membrane of uniform thickness bonded securely to substrate.

B. Install crack-suppression membrane to comply with Manufacturer's written instructions to produce membrane of uniform thickness bonded securely to substrate.

C. Do not install tile over waterproofing until waterproofing has cured and been tested to determine that it is watertight.

3.5 FLOOR TILE INSTALLATION

A. General: Install tile to comply with requirements in the Floor Tile Installation Schedule, including those referencing TCA installation methods and ANSI A108 Series of tile installation standards.
   1. For installations indicated below, follow procedures in ANSI A108 Series tile installation standards for providing 95 percent mortar coverage.
      a. Tile floors in wet areas
      b. Tile floors composed of rib-backed tiles.

B. Joint Widths: Install tile on floors with the following joint widths:
   1. Ceramic Mosaic Tile: 1/16 inch, verify per Manufacturers recommendation.

C. Stone Thresholds: Install stone thresholds at exposed tile edges and at locations indicated; set in same type of setting bed as abutting field tile, unless otherwise indicated.
   1. Set thresholds in latex-portland cement mortar for locations where mortar bed would otherwise be exposed above adjacent nontile floor finish.

D. Grout Sealer: Apply grout sealer to grout joints according to grout-sealer Manufacturer's written instructions. As soon as grout sealer has penetrated grout joints, remove excess sealer and sealer that has gotten on tile faces by wiping with soft cloth.

3.6 WALL TILE INSTALLATION

A. Install types of tile designated for wall installations to comply with requirements in the Wall Tile Installation Schedule, including those referencing TCA installation methods and ANSI setting-bed standards.

B. Form internal angles square and external angles bull nosed.

C. Sound tile after setting. Replace hollow sounding units.

D. Joint Widths: Install tile on walls with the following joint widths: As per tile Manufacturers recommendation;
   1. Ceramic Mosaic Tile: 1/16 inch
   2. Glazed Wall Tile: 1/16 inch.

3.7 CLEANING AND PROTECTING

A. Section 01700 - Execution Requirements: Final cleaning.

B. Cleaning: On completion of placement and grouting, clean all ceramic tile surfaces so they are free of foreign matter.

1. Remove latex-portland cement grout residue from tile as soon as possible.
2. Clean grout smears and haze from tile according to tile and grout Manufacturer's written instructions, but no sooner than 10 days after installation. Use only cleaners recommended by tile and grout Manufacturers and only after determining that cleaners are safe to use by testing on samples of tile and other surfaces to be cleaned. Protect metal surfaces and plumbing fixtures from effects of cleaning. Flush surfaces with clean water before and after cleaning.
3. Remove temporary protective coating by method recommended by coating Manufacturer that is acceptable to tile and grout Manufacturer. Trap and remove coating to prevent it from clogging drains.

C. When recommended by tile Manufacturer, apply coat of neutral protective cleaner to completed tile walls and floors. Protect installed tile work with kraft paper or other heavy covering during construction period to prevent staining, damage, and wear.

D. Prohibit foot and wheel traffic from tiled floors for at least seven days after grouting is completed.

E. Before final inspection, remove protective coverings and rinse neutral cleaner from tile surfaces.

3.8 FLOOR TILE INSTALLATION SCHEDULE

A. Tile Installation FTI-1: Interior floor installation on waterproof and crack-suppression membrane over concrete; thin-set mortar; TCA F122 and ANSI A108.5.
   1. Tile Type: Unglazed ceramic mosaic tile
   2. Thin-Set Mortar: Latex-portland cement mortar
   3. Grout: Polymer-modified unsanded grout.

3.9 WALL TILE INSTALLATION SCHEDULE

A. Tile Installation WTI-1: Interior wall installation over gypsum board on metal studs; thin-set mortar; TCA W242 and ANSI A108.4.
   1. Tile Type: Glazed wall tile
   2. Thin-Set Mortar: Organic Adhesive
   3. Grout: Polymer-modified unsanded grout.

B. Tile Installation WTI-2: Interior wall installation over cementitious backer units; organic adhesive; TCA W244 and ANSI A108.5.
   1. Tile Type: Glazed wall tile
   2. Thin-Set Mortar: Organic Adhesive
   3. Grout: Polymer-modified unsanded grout or silicone rubber grout, per Manufacturers' recommendation for wet areas.

3.10 SCHEDULES

END OF SECTION

SECTION 09510
ACOUSTICAL CEILINGS

PART 1 - GENERAL

1.1 SUMMARY

A. Section includes suspended metal grid ceiling system and perimeter trim; acoustic tile.; and supplementary acoustic insulation over system units.

B. Related Sections:
1. Section 07213 - Batt Insulation
2. Section 07900 - Joint Sealers
3. Section 08310 - Access Doors and Panels: Access panels
4. Section 15850 - Air Outlets and Inlets: Air diffusion devices in ceiling system
5. Section 16510 - Interior Luminaries: Light fixtures in ceiling system
6. Section 16821 - Public Address and Music Equipment: Speakers in ceiling system.

1.2 REFERENCES

A. ASTM International:
1. ASTM C635 - Standard Specification for the Manufacture, Performance, and Testing of Metal Suspension Systems for Acoustical Tile and Lay-in Panel Ceilings
2. ASTM C636 - Standard Practice for Installation of Metal Ceiling Suspension Systems for Acoustical Tile and Lay-In Panels
3. ASTM E1264 - Standard Classification for Acoustical Ceiling Products.

B. Ceilings and Interior Systems Construction Association:
1. CISCA - Acoustical Ceilings: Use and Practice.

C. Underwriters Laboratories Inc.:
1. UL - Fire Resistance Directory.

D. Intertek Testing Services (Warnock Hersey Listed):
1. WH - Certification Listings.

1.3 PERFORMANCE REQUIREMENTS

A. Suspension System: Rigidly secure acoustic ceiling system including integral mechanical and electrical components with maximum deflection of 1: 360.

1.4 SUBMITTALS

A. Section 01330 - Submittal Procedures: Submittal procedures.

B. Coordination Drawings: Reflected ceiling plans, drawn to scale, on which the following items are shown and coordinated with each other, based on input from installers of the items involved:
   1. Ceiling suspension system members.
   2. Method of attaching hangers to building structure:
      a. Furnish layouts for anchors, clips, and other ceiling attachment devices whose installation is specified in other Sections.
   3. Ceiling-mounted items including lighting fixtures, diffusers, grilles, speakers, sprinklers, access panels, and special moldings.
   4. Minimum Drawing Scale: 1/8 inch = 1 foot.

C. Samples for Initial Selection: For components with factory-applied color finishes.

D. Product Data: Submit data on metal grid system components and acoustic units.

E. Samples for Verification: For each component indicated and for each exposed finish required, prepared on Samples of size indicated below.
   1. Acoustical Panel: Set of 6-inch- square Samples of each type, color, pattern, and texture.
   2. Exposed Suspension System Members, Moldings, and Trim: Set of 12-inch-long Samples of each type, finish, and color.

F. Product Test Reports: Based on evaluation of comprehensive tests performed by a qualified testing agency, for each acoustical panel ceiling.

G. Research/Evaluation Reports: For each acoustical panel ceiling and components.

H. Maintenance Data: For finishes to include in maintenance manuals.

I. Qualification Data: For Installer of acoustical ceiling.

1.5 QUALITY ASSURANCE

A. Conform to CISCA requirements.

B. Source Limitations: Obtain each type of acoustical ceiling panel and supporting suspension system through one source from a single Manufacturer.

C. Maintain one copy of each document on site.

1.6 QUALIFICATIONS

A. Manufacturer: Company specializing in manufacturing products specified in this section with minimum three years documented experience.

B. Installer: Company specializing in performing Work of this section with minimum three years documented experience.

1.7 DELIVERY, STORAGE, AND HANDLING

A. Section 01600 - Product Requirements: Product storage and handling requirements.

B. Deliver acoustical panels, suspension system components, and accessories to Project site in original, unopened packages and store them in a fully enclosed, conditioned space where they will be protected against damage from moisture, humidity, temperature extremes, direct sunlight, surface contamination, and other causes.

C. Before installing acoustical panels, permit them to reach room temperature and a stabilized moisture content.

D. Handle acoustical panels carefully to avoid chipping edges or damaging units in any way.

1.8 MOCKUP

A. Section 01400 - Quality Requirements: Requirements for mockup.

B. Construct mock-up, 12 feet x 12 feet, including typical field and edge conditions.

C. Locate where directed by Architect/Engineer.

D. Incorporate accepted mockup as part of Work.

1.9 PRE-INSTALLATION MEETINGS

A. Section 01300 - Administrative Requirements: Pre-installation meeting.

B. Convene minimum two weeks prior to commencing work of this section.

1.10 ENVIRONMENTAL REQUIREMENTS

A. Section 01600 - Product Requirements.

B. Environmental Limitations: Do not install acoustical panel ceilings until spaces are enclosed and weatherproof, wet work in spaces is complete and dry, work above ceilings is complete, and ambient temperature and humidity conditions are maintained at the levels indicated for Project when occupied for its intended use.

C. Maintain uniform temperature of minimum 60 degrees F and maximum humidity of 40 percent prior to, during, and after acoustic unit installation.

1.11 SEQUENCING

A. Section 0110 - Summary: Work sequence.

B. Sequence Work to ensure acoustic ceilings are not installed until building is enclosed, sufficient heat is provided, dust generating activities have terminated, and overhead work is completed, tested, and approved.

C. Install acoustic units after interior wet work is dry.

D. Coordinate layout and installation of acoustical panels and suspension system with other construction that penetrates ceilings or is supported by them, including light fixtures, HVAC equipment, and partition assemblies.

1.12 EXTRA MATERIALS

A. Section 01700 - Execution Requirements: Spare parts and maintenance products.

B. Acoustical Ceiling Panels: Full-size panels equal to 3 percent of quantity installed.

C. Suspension System Components: Quantity of each exposed component equal to 2.0 percent of quantity installed.

D. Hold-Down Clips: Equal to 2.0 percent of quantity installed.

PART 2 - PRODUCTS

2.1 ACOUSTICAL PANELS, GENERAL

A. Acoustical Panel Standard: Provide Manufacturer's standard panels of configuration indicated that comply with ASTM E 1264 classifications as designated by types, patterns, acoustical ratings, and light reflectance, unless otherwise indicated.
   1. Mounting Method for Measuring NRC: Type E-400; plenum mounting in which face of test specimen is 15-3/4 inches away from test surface per ASTM E 795.

B. Acoustical Panel Colors and Patterns: Match appearance characteristics indicated for each product type.
   1. Where appearance characteristics of acoustical panels are indicated by referencing pattern designations in ASTM E 1264 and not Manufacturers' proprietary product designations, provide products selected by Architect from each Manufacturer's full range that comply with requirements indicated for type, pattern, color, light reflectance, acoustical performance, edge detail, and size.

C. Antimicrobial Fungicide Treatment: Provide acoustical panels with face and back surfaces coated with antimicrobial treatment consisting of Manufacturer's standard formulation with fungicide added to inhibit growth of mold and mildew and showing no mold or mildew growth when tested according to ASTM D 3273 and evaluated according to ASTM D 3274 or ASTM G 21.

2.2 SUSPENDED ACOUSTICAL CEILINGS

A. Manufacturers:
1. Armstrong World Industries, Fissured, Square Lay-in.
2. Celotex Building Products, Fissured, Square Lay-in.
3. USG Interiors, Fissured, Square Lay-in.
4. Substitutions: Section 01600 - Product Requirements.

2.3 SUSPENDED ACOUSTICAL CEILINGS COMPONENTS

A. Acoustic Panels: ASTM E1264, conforming to: Type III, Form 2, Pattern C D
1. Size: 24 x 24 inches
2. Thickness: 5/8 inches
3. Composition: Mineral
4. Density: .70 lb/cu ft
5. Light Reflectance: 80 percent
6. NRC Range: 50 to 60
7. STC Range: 35 to 39
8. Fire Hazard Classification: Class A Flame Spread 25 and smoke per ASTM E84
9. Edge: Square
10. Surface Color: White
11. Surface Finish: Non-directional fissured
12. Antimicrobial Treatment: Fungicide based.

2.4 METAL SUSPENSION SYSTEMS, GENERAL

A. Metal Suspension System Standard: Provide Manufacturer's standard direct-hung metal suspension systems of types, structural classifications, and finishes indicated that comply with applicable requirements in ASTM C 635.

B. Finishes and Colors, General: Comply with NAAMM's "Metal Finishes Manual for Architectural and Metal Products" for recommendations for applying and designating finishes. Provide Manufacturer's standard factory-applied finish for type of system indicated.
1. High-Humidity Finish: Comply with ASTM C 635 requirements for "Coating Classification for Severe Environment Performance" where high-humidity finishes are indicated.

C. Attachment Devices: Size for five times the design load indicated in ASTM C 635, Table 1, "Direct Hung," unless otherwise indicated. Comply with seismic design requirements.

D. Wire Hangers, Braces, and Ties: Provide wires complying with the following requirements:
1. Zinc-Coated, Carbon-Steel Wire: ASTM A 641/A 641M, Class 1 zinc coating, soft temper.
2. Size: Select wire diameter so its stress at 3 times hanger design load (ASTM C 635, Table 1, "Direct Hung") will be less than yield stress of wire, but provide not less than 0.106-inch- diameter wire.

E. Hold-Down Clips: Provide Manufacturer's standard hold-down clips spaced 24 inches o.c. on all cross tees.

2.5 METAL SUSPENSION SYSTEM FOR ACOUSTICAL PANEL CEILING

A. Products: Subject to compliance with requirements, provide one of the following:
1. Armstrong World Industries, Inc.; Prelude, 15/16" Face
2. USG Interiors, Inc.; DX, Exposed 15/16" Face
3. Substitutions: Section 01600 - Product Requirements.

B. Grid:
1. Non-fire Rated Grid: ASTM C635, intermediate; exposed T; components die cut and interlocking
2. Grid Materials: Commercial quality cold rolled steel with galvanized coating.
3. Exposed Grid Surface Width: 15/16 inch
4. Grid Finish: White color as selected
5. Accessories: Stabilizer bars, clips, splices, perimeter moldings, and hold down clips required for suspended grid system
6. Support Channels and Hangers: Galvanized steel; size and type to suit application, and ceiling system flatness requirement specified.

2.6 ACCESSORIES

A. Acoustic Batt Insulation: Specified in Section 07213, un-faced; 2 inch thick, where noted on documents.

B. Gypsum Board: Fire rated type; specified in Section 09260.

C. Acoustic Sealant For Perimeter Moldings: Specified in Section 07900.
1. Acoustical Sealant for Exposed and Concealed Joints: Manufacturer's standard nonsag, paintable, nonstaining latex sealant complying with ASTM C 834 and effective in reducing airborne sound transmission through perimeter joints and openings in building construction as demonstrated by testing representative assemblies according to ASTM E 90.

D. Gasket for Perimeter Moldings: Closed cell rubber sponge tape.

E. Touch-up Paint: Type and color to match acoustic and grid units.

PART 3 - EXECUTION

3.1 EXAMINATION

A. Section 01300 - Administrative Requirements: Coordination and project conditions.

B. Verify layout of hangers will not interfere with other work.

C. Examine substrates, areas, and conditions, including structural framing to which acoustical panel ceilings attach or abut, with Installer present, for compliance with requirements specified in this and other Sections that affect ceiling installation and anchorage and with requirements for installation tolerances and other conditions affecting performance of acoustical panel ceilings.
   1. Proceed with installation only after unsatisfactory conditions have been corrected.

3.2 INSTALLATION

A. Lay-In Grid Suspension System: General
   1. Install suspension system in accordance with ASTM C636, per Manufacturer's written instructions and CISCA's "Ceiling Systems Handbook."
   2. Install system capable of supporting imposed loads to deflection of 1/360 maximum.
   3. Locate system on room axis according to reflected plan.
   4. Install after major above ceiling work is complete. Coordinate location of hangers with other work.

B. Suspend ceiling hangers from building's structural members and as follows:
   1. Install hangers plumb and free from contact with insulation or other objects within ceiling plenum that are not part of supporting structure or of ceiling suspension system.
   2. Splay hangers only where required to miss obstructions; offset resulting horizontal forces by bracing, countersplaying, or other equally effective means.
   3. Where width of ducts and other construction within ceiling plenum produces hanger spacings that interfere with location of hangers at spacings required to support standard suspension system members, install supplemental suspension members and hangers in form of trapezes or equivalent devices.
   4. Secure wire hangers to ceiling suspension members and to supports above with a minimum of three tight turns. Connect hangers directly either to structures or to inserts, eye screws, or other devices that are secure and appropriate for substrate and that will not deteriorate or otherwise fail due to age, corrosion, or elevated temperatures.
   5. When steel framing does not permit installation of hanger wires at spacing required, install carrying channels or other supplemental support for attachment of hanger wires.
   6. Do not attach hangers to steel roof deck. Attach hangers to structural members.
   7. Hang suspension system independent of walls, columns, ducts, pipes and conduit.
   8. Space hangers not more than 48 inches o.c. along each member supported directly from hangers, unless otherwise indicated; provide hangers not more than 8 inches from ends of each member.
   9. Size supplemental suspension members and hangers to support ceiling loads within performance limits established by referenced standards and publications. Do not support components on main runners or cross runners when weight causes total dead load to exceed deflection capability.

C. Secure bracing wires to ceiling suspension members and to supports with a minimum of four tight turns. Suspend bracing from building's structural members as required for hangers, without attaching to metal roof deck.

D. Install suspension system runners so they are square and securely interlocked with one another. Remove and replace dented, bent, or kinked members.

E. Perimeter Molding:
   a. Install edge molding at intersection of ceiling and vertical surfaces into bed of acoustic sealant or with continuous gasket.
   b. Use longest practical lengths.
   c. Miter and rivet corners.
   d. Install at junctions with other interruptions.
2. Form expansion joints. Form to accommodate plus or minus 1 inch movement. Maintain visual closure.

F. Acoustic Units:
1. Fit acoustic units in place, free from damaged edges or other defects detrimental to appearance, function, and fit accurately into suspension system runners and edge moldings. Scribe and cut panels at borders and penetrations to provide a neat, precise fit.
2. Lay directional patterned units one way, as noted on documents. Fit border trim neatly against abutting surfaces.
3. Install units after above ceiling work is complete.
4. Install acoustic units level, in uniform plane, and free from twist, warp, and dents.
5. Cutting Acoustic Units:
   a. Cut to fit irregular grid and perimeter edge trim.
   b. Paint cut edges of panel remaining exposed after installation; match color of exposed panel surfaces using coating recommended in writing for this purpose by acoustical panel Manufacturer
6. Lay acoustic insulation for distance of 48 inches on both sides of acoustic partitions as indicated on Drawings.
7. Install hold-down clips to retain panels tight to grid system within 20 ft of exterior door and in areas indicated; space as recommended by panel Manufacturer's written instructions, unless otherwise indicated

3.3 ERECTION TOLERANCES

A. Section 01400 - Quality Requirements: Tolerances.

B. Maximum Variation from Flat and Level Surface: 1/8 inch in 10 feet.

C. Maximum Variation from Plumb of Grid Members Caused by Eccentric Loads: 2 degrees.

3.4 CLEANING

A. Clean exposed surfaces of acoustical panel ceilings, including trim, edge moldings, and suspension system members. Comply with Manufacturer's written instructions for cleaning and touchup of minor finish damage. Remove and replace ceiling components that cannot be successfully cleaned and repaired to permanently eliminate evidence of damage.

END OF SECTION

SECTION 09650
RESILIENT FLOORING

PART 1 - GENERAL

1.1 SUMMARY

A. Section includes resilient tile flooring and resilient base.

1.2 REFERENCES

A. ASTM International:
1. ASTM E84 - Standard Test Method for Surface Burning Characteristics of Building Materials
2. ASTM E662 - Standard Test Method for Specific Optical Density of Smoke Generated by Solid Materials
3. ASTM F1066 - Standard Specification for Vinyl Composition Floor Tile
4. ASTM F1344 - Standard Specification for Rubber Floor Tile
5. ASTM F1861 - Standard Specification for Resilient Wall Base.

B. Federal Specification Unit:
1. FS L-F-475 - Floor Covering Vinyl, Surface (Tile and Roll), with Backing.

1.3 PERFORMANCE REQUIREMENTS

A. Conform to applicable code for fire performance ratings as follows:
1. Flooring, critical radiant flux (CRF): Minimum 0.45 watt per square centimeter, per ASTM E 648
2. Flooring, smoke developed: Maximum 450, per ASTM E662
3. Wall base, flame spread: Maximum 75, per ASTM E84
4. Wall base, smoke developed: Maximum 450, per ASTM E84.

B. Source Limitations for Tile: Obtain all tile of same type and color or finish from one source or producer.

C. Obtain tile from same production run and of consistent quality in appearance and physical properties for each contiguous area.

1.4 SUBMITTALS

A. Section 01330 - Submittal Procedures: Submittal procedures.

B. Product Data: Submit data describing physical and performance characteristics; including sizes, patterns and colors available; and installation instructions.

C. Samples:
1. Submit Manufacturer's complete set of color samples for initial selection.

2. Submit two samples, 4 x 4 inch in size illustrating color and pattern for each resilient flooring product specified.

D. Manufacturer's Certificate: Certify Products meet or exceed specified requirements.

E. Qualifications Data: For Installer of Tile products.

1.5 CLOSEOUT SUBMITTALS

A. Section 01700 - Execution Requirements: Closeout procedures.

B. Operation and Maintenance Data: Submit maintenance procedures, recommended maintenance materials, and suggested schedule for cleaning, stripping, and re-waxing.

1.6 QUALIFICATIONS

A. Manufacturer: Company specializing in manufacturing products specified in this section with minimum three years documented experience.

B. Installer: Company specializing in performing Work of this section with minimum three years documented experience.

1.7 DELIVERY, STORAGE, AND HANDLING

A. Section 01600 - Product Requirements: Product storage and handling requirements.

B. Protect roll materials from damage by storing per Manufacturers recommendation.

C. Store resilient products and installation materials in dry spaces protected from the weather, with ambient temperatures maintained within range recommended by Manufacturer, but not less than 50 deg F or more than 90 deg F. Store tiles on flat surfaces.

1.8 ENVIRONMENTAL REQUIREMENTS

A. Section 01600 - Product Requirements.

B. Maintain temperature in storage area between 55 degrees F and 90 degrees F.

C. Store materials for not less than 48 hours prior, during and after installation in area of installation at temperature of 70 degrees F to achieve temperature stability. Thereafter, maintain conditions above 55 degrees F and not more than 90 degrees F.

D. Close spaces to traffic during floor covering installation.

E. Close spaces to traffic for 48 hours after floor covering installation.

F. Install resilient products after other finishing operations, including painting, have been completed.

1.9 EXTRA MATERIALS

A. Section 01700 - Execution Requirements: Spare parts and maintenance products.

B. Furnish extra materials described below that match products installed and that are packaged with protective covering for storage and identified with labels describing contents.
   1. Floor Tile: Furnish 1 box for every 50 boxes or fraction thereof, of each type, color, and pattern of floor tile installed.
   2. Furnish not less than 2 undamaged boxes for each color selection.

PART 2 - PRODUCTS

2.1 TILE FLOORING

A. Manufacturers:
   1. Armstrong World Industries, Inc.
   2. Azrock Commercial Flooring
   3. Roppe Corp.
   4. Tarkett Model
   5. Substitutions: Section 01600 - Product Requirements.

B. Vinyl Composition Tile: ASTM F1066:
   1. Size: 12 x 12 inch
   2. Thickness: 0.125 inch
   3. Pattern: Color and pattern dispersed uniformly throughout its thickness, Class 2 – through pattern
   4. Color to be selected by Architect from the full range currently available from Manufacturer.

C. Rubber Tile: ASTM F1066, ASTM F1344, Class I, Type A, B:
   1. Size: 12 x 12 inch
   2. Overall Thickness: 0.125 inch
   3. Base Thickness: 0.050 inch
   4. Design: Molded, in disc, square, diamond pattern
   5. Style: Solid color or Mottled.

2.2 RESILIENT BASE

A. Manufacturers:
   1. Armstrong World Industries, Inc. Model ‘Color-Integrated Rubber Wall Base’
   2. Tarkett Commercial Flooring Model ‘Napco Rubber Wall Base’
   3. Roppe Corp. Model ‘Pinnacle Rubber Base’
   4. Substitutions: Section 01600 - Product Requirements
   5. Vinyl base is not acceptable.

B. Base: ASTM F1861 Type TP Group 1 Rubber; top set coved:
   1. Height: 4 inch

2. Thickness: 1/8 inch thick
3. Finish: Satin or Matte
4. Length: Roll
5. Style: Coved
6. Accessories: Premolded external corners and end stops
7. Color to be selected by Architect from the full range currently available from Manufacturer.

2.3 ACCESSORIES

A. Subfloor Filler: Cementitious; type recommended by adhesive material Manufacturer.

B. Primers and Adhesives: Waterproof; types recommended by flooring Manufacturer.

C. Moldings and Edge Strips: Standard aluminum chromium alloy strips one inch wide and beveled, and of proper depth for the tile, fastened with countersunk screws and expansion shields at 8 inches on center. Install where vinyl tile joins concrete finish floor.

D. Filler for Coved Base: types recommended by flooring Manufacturer.

E. Sealer and Wax: Types recommended by flooring Manufacturer.

PART 3 - EXECUTION

3.1 EXAMINATION

A. Section 01310 - Project Management and Coordination: Verification of existing conditions before starting Work.

B. Verify concrete floors are dry to maximum moisture content as recommended by Manufacturer, and exhibit negative alkalinity, carbonization, and dusting.

C. Verify floor and lower wall surfaces are free of substances capable of impairing adhesion of new adhesive and finish materials.

D. Verify that floor surfaces are smooth and flat with maximum variation of 1/8 inch in 10 feet and are ready to receive work.

E. Examine substrates, with Installer present, for compliance with requirements for installation tolerances, moisture content, and other conditions affecting performance.
   1. Verify that finishes of substrates comply with tolerances and other requirements specified in other Sections and that substrates are free of cracks, ridges, depressions, scale, and foreign deposits that might interfere with adhesion of resilient products.
   2. Proceed with installation only after unsatisfactory conditions have been corrected.

3.2 PREPARATION

A. Prepare substrates according to Manufacturer's written recommendations to ensure adhesion of resilient products.

B. Remove sub-floor ridges and bumps. Fill minor low spots, cracks, joints, holes, and other defects with sub-floor filler to achieve smooth, flat, hard surface.

C. Prohibit traffic until filler is cured.

D. Clean substrate. Remove substrate coatings and other substances that are incompatible with adhesives and that contain soap, wax, oil, or silicone, using mechanical methods recommended by Manufacturer. Do not use solvents.

E. Apply primer as required to prevent "bleed-thru" or interference with adhesion by substances cannot be removed.

3.3 INSTALLATION - TILE FLOORING

A. Mix tile from container to ensure shade variations are consistent when tile is placed. Match tiles for color and pattern by selecting tiles from cartons in the same sequence as manufactured and packaged, if so numbered. Discard broken, cracked, chipped, or deformed tiles.

B. Adhere tiles to flooring substrates using a full spread of adhesive applied to substrate to produce a completed installation without open cracks, voids, raising and puckering at joints, telegraphing of adhesive spreader marks, and other surface imperfections.

C. Lay flooring with joints and seams parallel to building lines to produce symmetrical tile pattern.

D. Owner to select final pattern; Lay tiles with grain running in one direction or with basket weave pattern. Lay out tiles from center marks established with principal walls, discounting minor offsets, so tiles at opposite edges of room are of equal width. Adjust as necessary to avoid using cut widths that equal less than one-half tile at perimeter.

E. Scribe flooring to walls, columns, cabinets, floor outlets, and other appurtenances to produce tight joints.

F. Extend tiles into toe spaces, door reveals, closets, and similar openings.

G. Where floor finishes are different on opposite sides of door, terminate flooring under centerline of door.

H. Install edge strips at unprotected or exposed edges, where flooring terminates, and where indicated. Secure metal strips before installation of flooring with stainless steel screws.

I. Install flooring in recessed floor access covers. Maintain floor pattern, install tiles on covers for telephone and electrical ducts and similar items in finished floor areas. Maintain overall continuity of color and pattern with pieces of tile installed on covers. Tightly adhere tile edges to substrates that abut covers and to cover perimeters.

J. At movable partitions, install flooring under partitions without interrupting floor pattern.

K. Install feature strips and floor markings where indicated. Fit joints tightly.

3.4 INSTALLATION - BASE

A. Apply wall base to walls, columns, pilasters, casework and cabinets in toe spaces, and other permanent fixtures in rooms and areas where base is required. Tightly adhere wall base to substrate throughout length of each piece, with base in continuous contact with horizontal and vertical substrates.

B. Install wall base in lengths as long as practicable without gaps at seams and with tops of adjacent pieces aligned. Fit joints tightly and make vertical. Maintain minimum dimension of 18 inches between joints.

C. Miter internal corners: Use straight pieces of maximum lengths possible. Form by cutting an inverted V-shaped notch in toe of wall base at the point where corner is formed. Shave back of base where necessary to produce a snug fit to substrate.

D. At external corners, use premolded units. At exposed ends, use premolded units. Install premolded corners at external corners before installing straight pieces

E. Install base on solid backing. Bond tightly to wall and floor surfaces.

F. Scribe and fit to door frames and other interruptions.

G. On masonry surfaces or other similar irregular substrates, fill voids along top edge of wall base with Manufacturer's recommended adhesive filler material.

H. Do not stretch wall base during installation.

3.5 CLEANING AND PROTECTION OF INSTALLED CONSTRUCTION

A. Section 01700 - Execution Requirements: Final cleaning.

B. Remove excess adhesive from floor, base, and wall surfaces without damage. Perform the following operations immediately after completing resilient product installation:
   1. Remove adhesive and other blemishes from exposed surfaces.
   2. Sweep and vacuum surfaces thoroughly.
   3. Damp-mop surfaces to remove marks and soil.
      a. Do not wash surfaces until after time period recommended by Manufacturer.

C. Prohibit traffic on resilient flooring for 48 hours after installation.

D. Protect resilient products from mars, marks, indentations, and other damage from construction operations and placement of equipment and fixtures during remainder of construction period. Use protection methods recommended in writing by Manufacturer.
   1. Apply protective floor polish to horizontal surfaces that are free from soil, visible adhesive and surface blemishes if recommended in writing by Manufacturer.
      a. Use commercially available product acceptable to Manufacturer.
      b. Coordinate selection of floor polish with Owner's maintenance service.
   2. Cover products installed on horizontal surfaces with undyed, untreated building paper until Substantial Completion.
   3. Do not move heavy and sharp objects directly over surfaces. Place hardboard or plywood panels over flooring and under objects while they are being moved. Slide or roll objects over panels without moving panels.

E. Clean, seal, and maintain resilient flooring products.

END OF SECTION

SECTION 09900
PAINTS AND COATINGS

PART 1 - GENERAL

1.1 SUMMARY

A. Section includes surface preparation and field application of paints, stains, varnishes, and other coatings.

B. Related Sections:

1. Section 05500 - Metal Fabrications: Shop primed items
2. Section 15075 - Mechanical Identification
3. Section 16075 - Electrical Identification.

2. REFERENCES

A. ASTM International:

1. ASTM D16 - Standard Terminology Relating to Paint, Varnish, Lacquer, and Related Products
2. ASTM D4442 - Standard Test Methods for Direct Moisture Content Measurement of Wood and Wood-Base Materials.

B. Painting and Decorating Contractors of America:

1. PDCA - Architectural Painting Specification Manual.

C. SSPC: The Society for Protective Coatings:

1. SSPC - Steel Structures Painting Manual.

3. DEFINITIONS

A. Conform to ASTM D16 for interpretation of terms used in this section.

4. SUBMITTALS

A. Section 01330 - Submittal Procedures: Submittal procedures.

B. Product Data: Submit data on finishing products.

C. Samples:

1. Submit two paper chip samples, 8 ½ x 11 inch in size illustrating range of colors and textures available for each surface finishing product scheduled.

D. Manufacturer's Installation Instructions: Submit special surface preparation procedures and substrate conditions requiring special attention.

5. CLOSEOUT SUBMITTALS

A. Section 01700 - Execution Requirements: Closeout procedures.

B. Operation and Maintenance Data: Submit data on cleaning, touch-up, and repair of painted and coated surfaces.

6. QUALIFICATIONS

A. Manufacturer: Company specializing in manufacturing products specified in this section with minimum three years documented experience.

B. Applicator: Company specializing in performing work of this section with minimum three years documented experience.

C. Comply with governing codes and regulations. Regulations: Compliance with VOC and environmental regulations.

7. MOCKUP

A. Section 01400 - Quality Requirements: Mock-up requirements.

B. Construct mockup panel, 4 x 4 feet, illustrating coating color, texture, and finish.

C. Construct door and frame assembly illustrating paint and stain and varnish coating color, texture, and finish.

D. Locate where directed by Architect/Engineer.

E. Incorporate accepted mockup as part of Work.

8. PRE-INSTALLATION MEETINGS

A. Section 01300 - Administrative Requirements: Pre-installation meeting.

B. Convene minimum two weeks prior to commencing work of this section.

9. DELIVERY, STORAGE, AND HANDLING

A. Section 01600 - Product Requirements: Product storage and handling requirements.

B. Deliver products to site in sealed and labeled containers; inspect to verify acceptability.

C. Container Label: Include Manufacturer's name, type of paint, brand name, lot number, brand code, coverage, surface preparation, drying time, cleanup requirements, color designation, and instructions for mixing and reducing.

D. Paint Materials: Store at minimum ambient temperature of 50 degrees F and maximum of 90 degrees F, in ventilated area, and as required by Manufacturer's instructions.

10. ENVIRONMENTAL REQUIREMENTS

A. Section 01600 - Product Requirements.

B. Do not apply materials when surface and ambient temperatures are outside temperature ranges required by paint product Manufacturer.

C. Do not apply exterior coatings during rain or snow when relative humidity is outside humidity ranges, or moisture content of surfaces exceed those required by paint product Manufacturer.

D. Minimum Surface Application Temperatures for Latex / Acrylic Paints: 50 degrees F for interiors; 50 degrees F for exterior; unless approved for low-temp application (Minimum Surface Temperature 38 degrees F) or required otherwise by Manufacturer's instructions.

E. Minimum Application Temperature for Varnish and Finishes: 65 degrees F for interior or exterior, unless required otherwise by Manufacturer's instructions.

11. SEQUENCING

A. Section 01100 - Summary: Work sequence.

B. Sequence application to the following:

1. Do not apply finish coats until paintable sealant is applied.

2. Back prime wood trim before installation of trim.

12. WARRANTY

A. Section 01700 - Execution Requirements: Product warranties and product bonds.

B. Furnish five year Manufacturer warranty for paints and coatings.

13. EXTRA MATERIALS

A. Section 01700 - Execution Requirements: Spare parts and maintenance products.

B. Supply 1 gallons of each color, type, and surface texture; store where directed.

C. Label each container with color, type, texture, room locations, and in addition to Manufacturer's label.

2. - PRODUCTS

1. PAINTS AND COATINGS

A. Manufacturers: Subject to compliance with requirements, provide products by one of the following or a pre-approved equivalent Manufacturer:

1. Kelly-Moore Paint Co.
2. Benjamin Moore
3. Sherwin -Williams
4. Pittsburgh
5. All proposed substitutes must meet or exceed the standard of quality of products listed within the specifications.

2. PAINT, GENERAL

A. Material Compatibility:

1. Provide materials for use within each paint system that are compatible with one another and substrates indicated, under conditions of service and application as demonstrated by Manufacturer, based on testing and field experience.
2. For each coat in a paint system, provide products recommended in writing by Manufacturers of topcoat for use in paint system and on substrate indicated.

B. Colors: As selected by Architect from Manufacturer's full range.

C. Standard of Quality

1. Kelly-Moore Paint Company products are specified in the schedule as the standard of quality unless noted otherwise. Material selected for coatings systems shall be the product of a single manufacture unless specified or approved by the architect.

3. COMPONENTS

A. Coatings: Ready mixed, except field catalyzed coatings. Prepare coatings:

1. To soft paste consistency, capable of being readily and uniformly dispersed to homogeneous coating
2. For good flow and brushing properties
3. Capable of drying or curing free of streaks or sags.

B. Accessory Materials: Linseed oil, shellac, turpentine, paint thinners and other materials not specifically indicated but required to achieve finishes specified; commercial quality.

C. Patching Materials: Latex filler.

D. Fastener Head Cover Materials: Latex filler.

E. Wood-Knot Sealer: Sealer recommended in writing by topcoat Manufacturer for use in paint systems indicated.

3. - EXECUTION

1. EXAMINATION

A. Section 01300 - Administrative Requirements: Coordination and project conditions.

B. Verify surfaces and substrate conditions are ready to receive Work as instructed by product Manufacturer.

C. Examine surfaces scheduled to be finished prior to commencement of work. Report conditions capable of affecting proper application.

D. Test shop applied primer for compatibility with subsequent cover materials.

E. Measure moisture content of surfaces using electronic moisture meter. Do not apply finishes unless moisture content of surfaces are below the Manufacturers recommendation or at least the following maximums:

1. Plaster and Gypsum Wallboard: 12 percent

2. Masonry, Concrete, and Concrete Unit Masonry: 12 percent

3. Interior Wood: 15 percent, measured in accordance with ASTM D4442

4. Exterior Wood: 15 percent, measured in accordance with ASTM D4442

5. Concrete Floors: 8 percent.

2. PREPARATION

A. Comply with Manufacturer's written instructions and recommendations, applicable to substrates indicated.

B. Surface Appurtenances: Remove electrical plates, hardware, light fixture trim, escutcheons, and fittings prior to preparing surfaces or finishing.

1. After completing painting operations, use workers skilled in the trades involved to reinstall items that were removed. Remove surface-applied protection if any.

2. Do not paint over labels of independent testing agencies or equipment name, identification, performance rating, or nomenclature plates.

C. Surfaces: Correct defects and clean surfaces capable of affecting work of this section. Remove or repair existing coatings exhibiting surface defects.

D. Marks: Seal with shellac those which may bleed through surface finishes.

E. Impervious Surfaces: Remove mildew by scrubbing with solution of tri-sodium phosphate and bleach. Rinse with clean water and allow surface to dry.

F. Aluminum Surfaces Scheduled for Paint Finish: Remove surface contamination by steam or high pressure water. Remove oxidation with acid etch and solvent washing. Apply etching primer immediately following cleaning.

G. Asphalt, Creosote, or Bituminous Surfaces Scheduled for Paint Finish: Remove foreign particles to permit adhesion of finishing materials. Apply compatible sealer or primer.

H. Insulated Coverings: Remove dirt, grease, and oil from canvas and cotton.

I. Concrete Floors: Remove contamination, acid etch, and rinse floors with clear water. Verify required acid-alkali balance is achieved. Allow to dry.

J. Copper Surfaces Scheduled for Paint Finish: Remove contamination by steam, high pressure water, or solvent washing. Apply primer.

K. Copper Surfaces Scheduled for Natural Oxidized Finish: Remove contamination by applying oxidizing solution of copper acetate and ammonium chloride in acetic acid. Rub on repeatedly for required effect. Once attained, rinse surfaces with clear water and allow to dry.

L. Gypsum Board Surfaces: Fill minor defects with filler compound. Spot prime defects after repair.

M. Galvanized Surfaces: Remove surface contamination and oils and wash with solvent. Apply primer

N. Concrete and Unit Masonry Surfaces Scheduled to Receive Paint Finish: Remove dirt, loose mortar, scale, salt or alkali powder, and other foreign matter. Remove oil and grease with solution of tri-sodium phosphate; rinse well and allow to dry. Remove stains caused by weathering of corroding metals with solution of sodium metasilicate after thoroughly wetting with water. Allow to dry.

O. Plaster Surfaces: Fill hairline cracks, small holes, and imperfections with latex patching plaster. Make smooth and flush with adjacent surfaces. Wash and neutralize high alkali surfaces.

P. Uncoated Steel and Iron Surfaces: Remove grease, mill scale, weld splatter, dirt, and rust. Where heavy coatings of scale are evident, clean using methods recommended in writing by paint Manufacturer; clean by washing with solvent. Apply treatment of phosphoric acid solution, ensuring weld joints, bolts, and nuts are similarly cleaned. Spot prime paint after repairs.

Q. Shop Primed Steel Surfaces: Sand and scrape to remove loose primer and rust. Feather edges to make touch-up patches inconspicuous. Clean surfaces with solvent. Prime bare steel surfaces. Prime metal items including shop primed items.

R. Interior Wood Items Scheduled to Receive Paint Finish: Wipe off dust and grit prior to priming. Seal knots, pitch streaks, and sappy sections with sealer. Fill nail holes and cracks after primer has dried; sand between coats.

S. Interior Wood Items Scheduled to Receive Transparent Finish: Wipe off dust and grit prior to sealing, seal knots, pitch streaks, and sappy sections with sealer. Fill nail holes and cracks after sealer has dried; sand lightly between coats.

T. Exterior Wood Scheduled to Receive Paint Finish: Remove dust, grit, and foreign matter. Seal knots, pitch streaks, and sappy sections. Fill nail holes with tinted exterior paintable caulking compound after prime coat has been applied.

U. Metal Doors Scheduled for Painting: Prime metal door top and bottom edge surfaces.

3. APPLICATION

A. Apply paints according to Manufacturer's written instructions.

1. Use applicators and techniques suited for paint and substrate indicated.

2. Paint surfaces behind movable equipment and furniture same as similar exposed surfaces. Before final installation, paint surfaces behind permanently fixed equipment or furniture with prime coat only.

3. Paint front and backsides of access panels, removable or hinged covers, and similar hinged items to match exposed surfaces.

B. Do not apply finishes to surfaces that are not dry. Allow applied coats to dry before next coat is applied.

C. Apply each coat to uniform appearance. Apply each coat of paint slightly darker than preceding coat unless specified otherwise.

D. Sand wood and metal surfaces lightly between coats to achieve required finish.

E. Vacuum clean surfaces of loose particles. Use tack cloth to remove dust and particles just prior to applying next coat.

F. Where clear finishes are required, tint fillers to match wood. Work fillers into grain before set. Wipe excess from surface.

G. Prime concealed surfaces of woodwork with primer paint.

H. Apply paints to produce surface films without cloudiness, spotting, holidays, laps, brush marks, roller tracking, runs, sags, ropiness, or other surface imperfections. Cut in sharp lines and color breaks.

I. Prime concealed surfaces of interior wood surfaces scheduled to receive stain or varnish finish with gloss varnish reduced 25 percent with thinner.

J. Blockfiller shall be applied to the interior concrete block with not less than one (1) heavy coat and exterior concrete block with not less than two (2) heavy coats in a manner with brush and roller that forces the blockfiller into the fissures and pores of the block faces. Apply additional coats if required to produce a smooth, uniform surface and to close all open pores, crevices and pin holes.

K. Paint exposed conduit and electrical equipment occurring in finished areas. Color and texture to match adjacent surfaces. Do not paint light fixtures.

L. All surfaces shall receive either a prime coat or enamel undercoat before finish coats are applied. The type of finish coat shall determine the type of prime coat. Previously painted surfaces shall be sound and tightly adhering to its foundation.

M. No surface will be considered acceptable to receive finish paint until it has received a prime coat or enamel undercoat, and any surface that is finish painted without a prime coating shall be repainted as directed by the Architect/Engineer.

N. Do not paint naturally finished aluminum surfaces.

O. Finishing Mechanical And Electrical Equipment:

1. Refer to Section 15075 and Section 16075 for schedule of color coding and identification banding of equipment, duct work, piping, and conduit.

2. Paint both sides and edges of plywood backboards for electrical and telephone equipment before installing equipment.

3. Reinstall electrical cover plates, hardware, light fixture trim, escutcheons, and fittings removed prior to finishing.

4. FIELD QUALITY CONTROL

A. Section 01400 - Quality Requirements: Testing and Inspection Services.

B. Provide periodic testing with wet film thickness gauge to verify that the proper thickness of finish coating is being applied. (refer to product MSDS sheets)

C. Testing of Paint Materials: Owner reserves the right to invoke the following procedure at any time and as often as Owner deems necessary during the period when paints are being applied:

1. Owner will engage the services of a qualified testing agency to sample paint materials being used. Samples of material delivered to Project site will be taken, identified, sealed, and certified in presence of Contractor.

2. Testing agency will perform tests for compliance with product requirements.

3. Owner may direct Contractor to stop applying paints if test results show materials being used do not comply with product requirements. Contractor shall remove noncomplying-paint materials from Project site, pay for testing, and repaint surfaces painted with rejected materials.

Contractor will be required to remove rejected materials from previously painted surfaces if, on repainting with complying materials, the two paints are incompatible.

D. Inspect and test questionable coated areas.

5. CLEANING

A. Section 01700 - Execution Requirements: Final cleaning.

B. Collect waste material which may constitute fire hazard, place in closed metal containers, and remove daily from site.

C. After completing paint application, clean spattered surfaces. Remove spattered paints by washing, scraping, or other methods. Do not scratch or damage adjacent finished surfaces.

D. Protect work of other trades against damage from paint application. Correct damage to work of other trades by cleaning, repairing, replacing, and refinishing, as approved by Architect, and leave in an undamaged condition.

E. At completion of construction activities of other trades, touch up and restore damaged or defaced painted surfaces.

6. SCHEDULE - EXTERIOR SURFACES

A. Wood - Painted (Opaque):

1. One coat KM 255 ACRY-SHIELD- 100% Acrylic Exterior Wood Primer

2. Two coats KM 1250 ACRY-SHIELD- 100% Acrylic Exterior Semi-Gloss Enamel

B. Pavement Markings:

1. Two coats KM 1472 - Latex marking Paint

C. Concrete, Concrete Block, Cement Plaster:

1. One coat of KM 521 FILL and PRIME- 100% Acrylic Block Filler

2. Two coats of KM 1240 ACRY-SHIELD – 100% Acrylic Exterior Flat

D. Cement Plaster Soffits

1. One coat of KM 247 – Exterior 100% Acrylic Masonry Primer

2. Two coats of KM 1240 ACRY-SHIELD – 100% Acrylic Exterior Flat

E. Copper:

1. One coat GALVA-ETCH VE-180 – Vinyl Wash Etch Primer/Conditioner by Gulf Coast

2. One coat KM 5885 DTM- High Performance Acrylic Semi-gloss Enamel

F. Steel - Unprimed:

1. One coat KM 5725 DTM- Acrylic Primer/Finish

2. Two coats KM 5885 DTM- High Performance Acrylic Semi-gloss Enamel

G. Steel - Shop Primed:

1. One coat KM 5885 DTM- High Performance Acrylic Semi-gloss Enamel

H. Steel - Galvanized:

1. One coat KM 1725 ACRY-SHIELD – 100% Acrylic Metal Primer

2. Two coats KM 5885 DTM- High Performance Acrylic Semi-gloss Enamel

I .Truck Wash Bay Block Structure

1.One coat KM-145 Polyamide Epoxy Block Filler

2.One coat KM-110 Rust- Inhibitive Epoxy Primer

3.Two coats KM-15 Chemical Mastic High Build Epoxy

J. Truck Wash Bay Metal Structure

1. One coat KM-110 Rust- Inhibitive Epoxy Primer

2. Two coats KM-15 Chemical Mastic High Build Epoxy

7. SCHEDULE - INTERIOR SURFACES

A. Wood - Painted:

1. One coat of KM 973 ACRY-PLEX –ZERO VOC -Interior Wall Primer & Undercoat

2. Two coats KM 1685 DURA-POXY+ 100% Acrylic Semi-Gloss Enamel

B. Wood - Transparent:

1. Filler coat (for open grained wood only)

2. Two coats of stain KM 1285 ACRY-SHIELD – Exterior Oil/Latex Stain Base

3. One coat sealer KM 2097 KEL-THANE II Waterborne Interior Clear Satin Finish

4. Two full body coats of KM 2097 KEL-THANE II Waterborne Clear Satin Finish

C. Concrete, Concrete Block:

1. One coat KM 521 FILL and PRIME 100% Acrylic Block Filler

2. Two coats of KM 1685 DURA-POXY+ 100% Acrylic Semi-Gloss Enamel

D. Steel - Unprimed:

1. One coat of KM 1725 ACRY-SHIELD – 100% Acrylic Metal Primer

2. Two coats of KM 1685 DURA-POXY + 100% Acrylic Semi-Gloss Enamel

E. Steel - Primed:

1. One coat of KM 5725 DTM – Acrylic Primer/Finish

2. Two coats of KM 1685 DURA-POXY + 100% Acrylic Semi-Gloss Enamel

F. Steel - Galvanized:

1. One coat KM 1725 ACRY-SHIELD – 100% Acrylic Metal Primer

2. Two coats of KM 1685 DURA-POXY + 100% Acrylic Semi-Gloss Enamel

G. Gypsum Board Wall and Ceilings at Offices:

1. One coat KM 973 ACRY-PLEX -Zero VOC -Interior Wall Primer & Undercoat

2. Two coats of KM 2010 GREEN COAT –ZERO VOC- Interior Eggshell Wall Paint

H. Gypsum Board Wall, Ceilings and Plywood at High Traffic Areas and Shop.

1. One coat KM 973 ACRY-PLEX – Zero VOC- Interior Wall Primer & Undercoat.

2. Two Coats KM 1686 DURA-POXY+ 100% Acrylic Enamel Eggshell

END OF SECTION

SECTION 09910
PAINTING FUELING SYSTEM

PART 1 - GENERAL

1.01 SECTION INCLUDES

A. Surface Preparation

B. Surface Finish Schedule

1.02 RELATED WORK

A. Section Various: Shop primed items, as called for under individual sections.

1.03 REFERENCES

A. ANSI/ASTM D16 - Definitions of Terms Relating to Paint, Varnish, Lacquer, and Related Products.

1.04 DEFINITION

A. Conform to ANSI/ASTM D16 for interpretation of terms used in this Section.

1.05 QUALITY ASSURANCE

A. Product Manufacturer: Company specializing in manufacturing quality paints and finishing products with ten years experience.

B. Applicator: Company specializing in commercial painting and industrial painting with five years documented experience.

1.06 REGULATORY REQUIREMENTS

A. Conform to applicable code for flame/fuel/smoke rating requirements for finishes.

1.07 SUBMITTALS

A. Submit product data under provisions of Section 01330 - Submittals.

B. Provide product data on all finishing products.

C. Submit samples under provisions of Section 01330 - Submittals.

D. Submit manufacturers' application instructions under provisions of Section 01330 - Submittals.

1.08 DELIVERY, STORAGE, AND HANDLING

A. Deliver products to site under provisions of Section 01600 - Material and Equipment.

B. Store and protect products under provisions of Section 01600 - Material and Equipment.

C. Deliver products to site in sealed and labeled containers; inspect to verify acceptance.

D. Container labeling to include manufacturer's name, type of paint, brand name, brand code, coverage, surface preparation, drying time, cleanup, color designation, and instructions for mixing and reducing.

E. Store paint materials at minimum ambient temperature at 45°F (7°C) and a maximum of 90°F (32°C), in well ventilated areas, unless required otherwise by manufacturers' instructions.

F. Take precautionary measures to prevent fire hazards and spontaneous combustion.

1.09 ENVIRONMENTAL REQUIREMENTS

A. Provide continuous ventilation and heating facilities to maintain surface and ambient temperatures above 45°F for 24 hours before, during and 48 hours after application of finishes, unless required otherwise by manufacturer's instructions.

B. Do not apply exterior coatings during rain or snow, or when relative humidity is above 50%, unless required otherwise by manufacturer's instructions.

C. Minimum Application Temperatures for Latex Paints: 45°F (7°C) for interiors; 50°F (10°C) for exteriors, unless required otherwise by manufacturer's instructions.

1.10 EXTRA STOCK

A. Provide one-gallon container of each color at each site to Owner.

PART 2 - PRODUCTS

2.01 ACCEPTABLE MANUFACTURER'S – PAINT

A. Tnemec

B. Pittsburgh

C. Sherwin Williams

2.02 ACCEPTABLE MANUFACTURER'S - PRIMER SEALERS

A. Tnemec

B. Pittsburgh

C. Sherwin Williams

2.03 ACCEPTABLE MANUFACTURER'S - FIELD CATALYZED COATINGS

A. Tnemec

B. Pittsburgh

C. Sherwin Williams

2.04 MATERIALS

A. Coatings: Ready mixed, except field-catalyzed coatings. Process pigments to a soft paste consistency, capable of being readily and uniformly dispersed to a homogeneous coating.

B. Coatings: Good flow and brushing properties; capable of drying or curing free of streaks or sags.

C. Accessory Materials: Linseed oil, shellac, turpentine, paint thinners and other materials not specifically indicated but required to achieve the finish specified, of commercial quality.

PART 3 - EXECUTION

3.01 INSPECTION

A. Verify that surfaces and substrate conditions are ready to receive work as instructed by the product manufacturer.

B. Examine surfaces scheduled to be finished prior to commencement of work. Report any condition that may potentially affect proper application.

3.02 PREPARATION

A. Remove electrical plates, hardware, light fixture trim, and fittings prior to preparing surfaces or finishing.

B. Correct minor defects and clean surfaces that affect work of this Section.

C. Shellac and seal marks which may bleed through surface finishes.

D. Impervious Surfaces: Remove mildew by scrubbing with solution of tri-sodium phosphate and bleach. Rinse with clean water and allow surface to dry.

E. Aluminum Surfaces Scheduled for Paint Finish: Remove oxidation with acid etch and solvent washing. Apply etching primer immediately following cleaning.

F. Asphalt, Creosote, or Bituminous Surfaces Scheduled for Paint Finish: Remove foreign particles to permit adhesion of finishing materials. Apply compatible sealer or primer.

G. Insulated Coverings: Remove dirt, grease, and oil from canvas and cotton.

H. Concrete Floors: Remove contamination, then acid etch and rinse floors with clear water. Verify required acid-alkali balance is achieved. Allow to dry.

I. Copper Surfaces Scheduled for a Paint Finish: Remove contamination by steam, high-pressure water, or solvent washing. Apply vinyl etch primer immediately following cleaning.

J. Copper Surfaces Scheduled for a Natural Oxidized Finish: Remove contamination by applying oxidizing solution of copper acetate and ammonium chloride in acetic acid. Rub on repeatedly for required effect. Once attained, rinse surfaces with clear water and allow to dry.

K. Galvanized Surfaces: Remove surface contamination and oils and wash with solvent. Apply coat of etching primer.

L. Concrete and Unit Masonry Surfaces Scheduled to Receive Paint Finish: Remove dirt, loose mortar, scale, salt or alkali powder, and other foreign matter. Remove oil and grease with a solution of tri-sodium phosphate; rinse well and allow to dry. Remove stains caused by weathering of corroding metals with a solution of sodium metasilicate after thoroughly wetting with water. Allow to dry.

M. Uncoated Steel and Iron Surfaces: Remove grease, scale, dirt, and rust. Where heavy coatings of scale are evident, remove by wire brushing or sandblasting; clean by washing with solvent. Apply a treatment of phosphoric acid solution, ensuring weld joints, bolts, and nuts are similarly cleaned. Spot prime paint after repairs.

N. Shop Primed Steel Surfaces: Sand and scrape to remove loose primer and rust. Feather edges to make touch-up patches inconspicuous. Clean surfaces with solvent. Prime bare steel surfaces.

3.03 PROTECTION

A. Protect elements surrounding the work of this Section from damage or disfiguration.

B. Repair damage to other surfaces caused by work of this Section.

C. Furnish drop cloths, shields, and protective methods to prevent spray or droppings from disfiguring other surfaces.

D. Remove empty paint containers from site.

3.04 APPLICATION

A. Apply products in accordance with manufacturer's instructions.

B. Do not apply finishes to surfaces that are not dry.

C. Apply each coat to uniform finish.

D. Apply each coat of paint slightly darker than preceding coat unless otherwise approved.

E. Sand lightly between coats to achieve required finish.

F. Allow applied coat to dry before next coat is applied.

3.05 FINISHING MECHANICAL AND ELECTRICAL EQUIPMENT

A. Paint shop-primed equipment.

B. Prime and paint insulated and exposed pipes, conduit, boxes, insulated and exposed ducts, hangers, brackets, collars and supports, where items are refinished.

C. Replace identification markings on mechanical or electrical equipment when painted accidentally. Contractor shall paint junction box covers independently from conduit.

D. Paint exposed conduit and electrical equipment.

E. Replace electrical plates, hardware, light fixture trim, and fittings removed prior to finishing.

3.06 CLEANING

A. As work proceeds, promptly remove paint where spilled, splashed, or spattered.

B. During progress of work, maintain premises free of unnecessary accumulation of tools, equipment, surplus materials, and debris.

C. Collect cotton waste, cloths, and material which may constitute a fire hazard, place in closed metal containers and remove daily from site.

3.07 SCHEDULE - SHOP PRIMED ITEMS FOR SITE FINISHING

A. Valves

B. Tanks (Above ground)

3.08 SCHEDULE - EXTERIOR SURFACES

A. Steel - Unprimed
1. One coat universal primer.
2. Two coats alkyd enamel, semi-gloss.

B. Steel - Shop Primed
1. Touch up with universal primer.
2. Two coats alkyd enamel, semi-gloss.

C. Steel - Galvanized
1. One coat etching primer.

2. One coat universal primer.
3. Two coats alkyd enamel, semi-gloss.

D. Fiberglass Pipe
1. Two coats as recommended by pipe supplier.

E. Concrete
1. One coat primer as recommended by paint supplier.
2. Two coats alkyd enamel, semi-gloss.

3.09 COLORS

A. Submit manufacturers' color selection and schedule of items to be painted to Owner at the pre-construction meeting. Owner will select colors and notify Contractor.

3.10 SCHEDULE – ITEMS

A. Tanks (Above Ground)

B. Valves

C. Pipe

D. Stairs and platforms

E. Exposed conduit, wireways, etc.

F. Guard post

G. Manhole covers (sump) and frames

H. Canopy

END OF SECTION

SECTION 10170
PLASTIC TOILET COMPARTMENTS

PART 1 - GENERAL

1.1 SUMMARY

A. Section includes solid plastic toilet compartments and urinal screen.

B. Related Sections:
1. Section 06114 – Carpentry Work: Concealed wood framing and blocking for compartment support
2. Section 10800 - Toilet, Bath, and Laundry Accessories

1.2 REFERENCES

A. ASTM International:
1. ASTM A666 - Standard Specification for Austenitic Stainless Steel Sheet, Strip, Plate, and Flat Bar.

1.3 SUBMITTALS

A. Section 01330 - Submittal Procedures: Submittal procedures.

B. Shop Drawings: Indicate partition plan, elevation views, dimensions, and details of wall, floor, and ceiling supports, door swings.

C. Product Data: Submit data on panel construction, hardware, and accessories.

D. Manufacturer's Certificate: Certify Products meet or exceed specified requirements.

E. Samples: Submit two 3 x 3 inch in size illustrating panel finish, color, and sheen.

F. Manufacturer's Installation Instructions: Submit special procedures and perimeter conditions requiring special attention.

1.4 CLOSEOUT SUBMITTALS

A. Section 01700 - Execution Requirements: Closeout procedures.

B. Operation and Maintenance Data: Submit recommended cleaning methods, cleaning materials, stain removal methods, and polishes and waxes.

1.5 COORDINATION

A. Section 01300 - Administrative Requirements: Coordination and project conditions.

B. Coordinate Work with placement of support framing and anchors in wall and ceiling.

PART 2 - PRODUCTS

2.1 SOLID PLASTIC TOILET COMPARTMENTS

A. Manufacturers:
1. Accurate Model Accurate Partitions
2. Global Steel Products Corporation model Global Polymer
3. Ampco Model Ampco Solid Plastic Polyethylene
4. Substitutions: Refer to Section 01600 - Material and Equipment.

B. Product Description: Floor mounted overhead braced toilet compartments, wall mounted urinal.

2.2 COMPONENTS

A. Toilet Compartments: High-Density polyethylene (HDPE) polymer - Solid molded plastic panels, doors, and pilasters, floor-mounted overhead head rail-braced and wall-hung.
1. Color: Single color as selected from Manufacturers' full color line.

B. Door and Panel Dimensions:
1. Thickness: 1 inch
2. Door Width: 24 inch
3. Accessible Door Width: 36 inch
4. Height: 58 inch
5. Thickness of Pilasters: 1-1/4 inch.

C. Urinal Screens: 24 x 42 inch - Wall mounted with panel brackets.

2.3 ACCESSORIES

A. Pilaster Shoe: Formed ASTM A666 Type 304 stainless steel with No. 4 finish, 4 inch high, concealing floor fastenings. Provide adjustment for floor variations with screw jack through steel saddles integral with pilaster.

B. Head Rails: Hollow anodized aluminum tube, 1 x 1-5/8 inch size, with cast socket wall brackets.

C. Brackets: anodized aluminum, to color as selected.

D. Attachments, Screws, and Bolts: Stainless steel.
1. For attaching panels and pilasters to brackets: Through-bolts and nuts.

E. Hardware: chrome plated non-ferrous cast metal: Furnish hardware to comply with ANSI A117.1 and Title III of the Americans with Disabilities Act (ADA) as follows:
   1. Hinges: Supply two heavy duty extruded satin anodized Type 6463-T5 aluminum hinges (three hinges for door widths exceeding 26"). Hinges shall wrap around stile and door components, be reinforced with steel supports, and be fully adjustable for door positioning. All hardware mounted with theft resistant thru-bolts.
   2. Nylon bearings.
   3. Latch and Keeper: Heavy duty extruded satin anodize Type 6463-T5 aluminum slide latch and keeper with emergency release.
   4. Coat Hook: Cast chrome plated non-ferrous metal coat hook (O/S) and/or combination hook bumper (I/S).
   5. Door Pull: Heavy duty cast satin anodized aluminum.
   6. Coat hook with rubber bumper; one for each compartment, mounted on panel.
   7. Furnish door pull for outswinging doors.
   8. Furnish metal heat sink at bottom of doors and partitions.

PART 3 - EXECUTION

3.1 EXAMINATION

A. Section 01300 - Administrative Requirements: Coordination and project conditions.

B. Verify field measurements are as indicated on shop drawings.

C. Verify correct spacing of and between plumbing fixtures.

D. Verify correct location of built-in framing, anchorage, and bracing.

3.2 INSTALLATION

A. Maintain 3/8 to 1/2 inch space between wall and panels and between wall and end pilasters.

B. Attach panel brackets securely to walls using anchor devices.

C. Attach panels and pilasters to brackets. Locate head rail joints at pilaster center lines.

D. Field touch-up of scratches or damaged finish will not be permitted. Replace damaged or scratched materials with new materials.

3.3 ERECTION TOLERANCES

A. Section 01400 - Quality Requirements: Tolerances.

B. Maximum Variation From Indicated Position: 1/4 inch.

C. Maximum Variation From Plumb: 1/8 inch.

3.4 ADJUSTING AND CLEANING

A. Section 01700 - Execution Requirements: Testing, adjusting, and balancing.

B. Adjust and align hardware to uniform clearance at vertical edge of doors, not exceeding 3/16 inch.

C. Adjust adjacent components for consistency of line or plane.

D. Hardware Adjustment: Adjust and lubricate hardware for proper operation. Set hinges on in-swing doors to hold open approximately 30 degrees from closed position when unlatched. Set hinges on out-swing doors (and entrance swing doors) to return to fully closed position.

E. Clean and Protect: Clean exposed surfaces of compartment systems using materials and methods recommended by Manufacturer, and provide protection as necessary to prevent damage during remainder of construction period.

END OF SECTION

SECTION 10200
LOUVERS & VENTS

PART 1 - GENERAL

1.1 SUMMARY

A. Section Includes: Metal wall louvers and screens exposed to view in finish work, including:
   1. Exterior metal louvers
   2. Louvers at locations where HVAC ductwork terminates at exterior walls
   3. Other exposed exterior and interior louvers indicated on Drawings

B. Extent: Extent of exterior louvers is shown on architectural drawings. Coordinate requirements, quantities and sizes with mechanical drawings. Louvers not shown on architectural drawing, but indicated on mechanical drawings shall be provided as part of work of this section.

C. Related Sections: Section(s) related to this section include:
   1. Sealant and Caulking: Division 7 Joint Treatment Section
   2. Dampers and Ductwork: Division 15 Dampers and Ductwork Sections
   3. Grilles and Registers: Division 15 Grilles and Registers Sections

1.2 REFERENCES

A. General: Standards listed by reference, including revisions by issuing authority, form a part of this specification section to extent indicated. Standards listed are identified buy issuing authority, authority abbreviation, designation number, title, or other designation established by issuing authority. Standards subsequently referenced herein are referred to by issuing authority abbreviation and standard designation.

B. American Society for Testing and Materials (ASTM):
   1. ASTM B209 - Specification for Aluminum and Aluminum-Alloy Sheet and Plate
   2. ASTM B221 - Specification for Aluminum and Aluminum-Alloy Extruded Bars, Rods, Wire, Shapes, and Tubes.

C. Air Movement and Control Association (AMCA):
   1. AMCA Standard 500 - Test Method for Louvers, Dampers, and Shutters
   2. AMCA Publication 261 - Directory of Licenses Products, current edition.

D. Sheet Metal and Air Condition Contractors National Association (SMACNA)
   1. SMACNA - Architectural Sheet Metal Manual, current edition.

E. American Architectural Manufacturer's Association (AAMA):
   1. AAMA Standard 605 - Voluntary Specification for High Performance Organic Coating on Architectural Extrusions and Panels.

1.3 SYSTEM DESCRIPTION

A. Performance Requirements: Provide louvers, which have been manufactured, fabricated and installed to withstand loads from International Building Code – 2007 and to maintain performance criteria stated by Manufacturer without defects, damage, or failure.

B. Louver Performance: where louvers are indicated to comply with specific performance requirements, provide units whose performance ratings have been determined in compliance with Air Movement and Control Association (AMCA) Standard 500.

1.4 SUBMITTALS

A. General: Submit listed submittals in accordance with Conditions of the Contract and Division 1 Submittal Procedures section.

B. Product Data: Submit product data sheet for specified products.
1. Performance Certificates: Submit performance certification, if not included in product data

C. Shop Drawings: Submit shop drawings showing layout, profiles and product components, including anchorage, accessories, finish colors, patterns and textures.
1. Include information necessary for fabrication and installation of louvers. Indicate materials, sizes, thickness, fastenings and profiles.

D. Quality Assurance Submittals: Submit the following:
1. Test Reports: Certified test reports showing compliance with specified performance characteristics and physical properties.
    a. Submit certified test results from an approved testing laboratory showing that the louvers proposed meet the criteria specified herein.
2. Certificates: Product certificates signed by Manufacturer certifying materials comply with specified performance characteristics and criteria, and physical requirements.

1.5 DELIVERY, STORAGE & HANDLING

A. General: Comply with Division 1 Product Requirements Sections.

B. Ordering: Comply with Manufacturer’s ordering instructions and lead-time requirements to avoid construction delays.

C. Delivery: Deliver materials in Manufacturer’s original, unopened, undamaged containers with identification labels intact.
1. Deliver, store and handle products to avoid any distortion or damage due to moisture, physical abuse or other cause Louvers shall be free from

nicks, scratches and blemishes. Replace defective or damaged materials with new.

1.6 PROJECT CONDITIONS

A. Field Measurements: Verify actual measurements/openings by field measurements before fabrication; show recorded measurements on shop drawings. Coordinate field measurements and fabrication schedule with construction progress to avoid construction delays.

1.7 WARRANTY

A. Project warranty refers to Conditions of the Contract for project warranty provisions. Manufacturer's Warranty: Submit, for Owner's acceptance, Manufacturer's standard warranty document executed by authorized company official. Manufacturer's warranty is in addition to, and not a limitation of, other rights owner may have under Contract Documents.

PART 2 - PRODUCTS

2.1 WALL LOUVERS

A. Manufacturers:
1. Industrial Louvers Inc. (ILI)
2. Airline Products Company. (APC)
3. Ruskin Company (RC).

2.2 LOUVER ACCESSORIES

A. Exterior Aluminum Sill: Provide sill flashing of same material and finish as louvers where indicated on the drawings.

B. Louver Screens: Provide framed removable screens for exterior louvers.
1. Screens shall be 1/8" (12.7 mm) mesh .063" (1.6 mm) aluminum wire mounted in extruded aluminum re-wireable frames.
2. Locate screens on inside face of louvers.
3. Screen frames shall have welded corners and be secured to the louver frame with machine screws, at each corner and at 12" (304.8 mm) c.o. between.

2.3 MATERIALS

A. Aluminum Sheet: ASTM B209 Alloy 3003 or 5005 with temper as required for forming, or as otherwise recommended by metal producer to provide required finish.

B. Aluminum Extrusions: ASTM B221, Alloy 6063.

C. Fastenings: Provide stainless steel screws and fasteners for aluminum louvers and zinc-coated or stainless steel screws and fasteners for steel louvers. Provide other accessories as required for complete and proper installation.

2.4 FABRICATION

A. Fabrication Requirements:
   1. Performance: Fabricate as required for optimum performance with respect to water penetration, strength, durability and uniform appearance.
   2. Size:
      a. Fabricate louvers in masonry walls to outside dimensions indicated, with allowance of 1/4” on each side for sealant joints.
      b. Verify sizes with final HVAC shop drawings, including detail dimensions of ductwork, dampers or other fittings abutting louvers.
   3. Field Measurements: Verify size, location and placement of louver units prior to fabrication.
   4. Shop Assembly:
      a. Fabricate to minimize field adjustments, splicing, mechanical joints and field assembly of units.
      b. Preassemble units in shop to greatest extent possible and disassemble as necessary for shipping and handling.
      c. Clearly mark units for reassemble and coordinated installation.
   5. Accessories: Include supports, anchorages and accessories required for complete assembly.
   6. Vertical Mullions: Provide vertical mullions of type and spacing indicated but not further apart than recommended by the Manufacturer.
   7. Horizontal Mullions: Provide horizontal mullions at horizontal joints between louver units except where continuous vertical assemblies are indicated.
   8. Connections: Join frame and blade members to one another by welding, except where field bolted connections between frame members are made necessary by size of louvers.
   9. Spacing: Maintain equal blade spacing to produce uniform appearance.

2.5 FINISHES (FACTORY)

A. Shop Finishing: Factory finish louvers and accessories with an organic coating.
   1. Organic Coating: Clean and prime exposed aluminum surfaces and apply a Kynar 500/Hylar 500 2-coat finish conforming to AAMA 605 in a standard color to match building metal siding. Minimum dry film thickness shall be 1.2 mil.

B. Finish Protection: Provide finish protection as recommended by louver Manufacturer.

PART 3 - EXECUTION

3.1 MANUFACTURER'S INSTRUCTIONS

A. Compliance: Comply with Manufacturer's product data, including product technical bulletins, product catalog installation instructions, and product carton instructions for installation.

3.2 EXAMINATION

A. Site Verification of Conditions: Verify substrate conditions, which have been previously installed under other sections, are acceptable for product installation in accordance with Manufacturer's instructions.

3.3 INSTALLATION

A. Louver Installation:
   1. Louvers shall be installed in accordance with Manufacturers approved shop drawings and as shown. Provide all necessary fastenings and anchors required to a complete installation. Units to be installed plumb, level and in proper alignment with adjacent work.
   2. Form tight joints within work of this Section. Fit exposed connections accurately.
   3. Louvers shall be protected from damage from subsequent building operations.
   4. Protect metal surfaces from corrosion or galvanic action by application of a heavy coating of bituminous paint on surfaces, which shall be in contact with concrete, masonry or dissimilar metals.

END OF SECTION

SECTION 10350
FLAGPOLES

PART 1 - GENERAL

1.1 SUMMARY

A. Section includes flagpoles and accessories.

B. Related Sections:
1. Section 03300: Concrete base and foundation construction.

1.2 REFERENCES

A. ASTM International:
1. ASTM A53/A53M - Standard Specification for Pipe, Steel, Black and Hot-Dipped, Zinc-Coated, Welded and Seamless
2. ASTM A123/A123M - Standard Specification for Zinc (Hot-Dip Galvanized) Coatings on Iron and Steel Products
3. ASTM B221 - Standard Specification for Aluminum and Aluminum-Alloy Extruded Bars, Rods, Wire, Profiles, and Tubes
4. ASTM B241/B241M - Standard Specification for Aluminum and Aluminum-Alloy Seamless Pipe and Seamless Extruded Tube.

B. Copper Development Association Inc.:
1. CDA - Cooper Brass Bronze Design Handbook: Architectural Applications.

1.3 PERFORMANCE REQUIREMENTS

A. Flagpole With Flag Flying: Resistant without permanent deformation to 120 miles/hr wind velocity; non-resonant, safety design factor of 2.5.

B. Flagpole Without Flag: Resistant without permanent deformation to 120 miles/hr wind velocity; non-resonant, safety design factor of 2.5.

1.4 SUBMITTALS

A. Section 01330 - Submittal Procedures: Submittal procedures.

B. Shop Drawings: Indicate detailed dimensions, base or attachment details, anchor requirements, and imposed loads.

C. Shop Drawings: Indicate details of foundation system for ground-set flagpoles.

D. Product Data: Submit data on pole, accessories, and configurations.

E. Samples: Submit two 5 x 5 inch in size illustrating pole material, color, and finish.

1.5 CLOSEOUT SUBMITTALS

A. Section 01700 - Execution Requirements: Closeout procedures.

B. Operation and Maintenance Data: Submit Operation and Maintenance Data.

1.6 QUALITY ASSURANCE

A. Source Limitations: Obtain each flagpole as a complete unit, including fittings, accessories, bases, and anchorage devices, from a single Manufacturer.
   1. Obtain through one source from a single Manufacturer.

1.7 QUALIFICATIONS

A. Design flagpole foundation under direct supervision of Professional Engineer experienced in design of this Work and licensed in State of Texas.

1.8 DELIVERY, STORAGE, AND HANDLING

A. Section 01600 - Product Requirements: Product storage and handling requirements.

B. Spiral wrap flagpole with protective covering and pack in protective shipping tubes or containers.

C. Protect flagpole and accessories from damage or moisture.

PART 2 - PRODUCTS

2.1 FLAGPOLES

A. Manufacturers:
   1. American Flagpole Model
   2. Baartol Co., Inc. Model
   3. Concord Industries, Inc.
   4. Morgan-Francis Pole Model
   5. Substitutions: Section 01600 - Product Requirements.

B. Product Description: Pole Without Flag: Resist without permanent deformation, 120 miles/hr. wind velocity, non-resonant and per local code requirements.

2.2 COMPONENTS

A. Aluminum: ASTM B241/B241M, ASTM B221, 6063 alloy, T6 temper.

B. Outside Butt Diameter: 6 inches.

C. Outside Tip Diameter: 3 inches.

D. Nominal Wall Thickness: .188 inch.

E. Nominal Height: 30ft; measured from top of base.

F. Flagpole: Ground mounted type.

G. Flagpole Design: Cone tapered

H. Halyard: Interior type.

2.3 ACCESSORIES

A. Finial Ball: Aluminum, 6 inch diameter.

B. Truck Assembly: Concealed, Cast aluminum; revolving, stainless steel ball bearings, non-fouling.

C. Flag: 3 x 5 design size, fabric, owner provided.

D. Internal Halyard, Winch System: Manually operated winch with control stop device and removable handle, and stainless-steel cable halyard. Provide flush access door secured with cylinder lock.

E. Halyard Flag Snaps: Provide two chromium-plated bronze swivel snap hooks per halyard.
1. Provide with neoprene or vinyl covers.

F. Primer: Zinc rich type.

G. Hand Crank Operator: Removable type.

H. Foundation Tube Sleeve: Corrugated 16 gage steel, galvanized, depth as required by design and per Manufacturer requirements.

I. Pole Base Attachment: Sleeve; aluminum base with base cover.

J. Lighting Ground Rod: 36 inch long copper rod, 3/4 inch diameter.

K. Lightning Ground Cable: Copper No. 6 AWG, soft drawn.

L. Sand: ASTM C 33, fine aggregate.

2.4 FACTORY FINISHING

A. Metal Surfaces in Contact With Concrete: Asphaltic paint.

B. Aluminum: Mill finish, Natural Satin. Anodized to clear color.

C. Finial: Gold anodized finish.

PART 3 - EXECUTION

3.1 EXAMINATION

A. Section 01300 - Administrative Requirements: Coordination and project conditions.

B. Verify concrete foundation is ready to receive work and dimensions are as indicated on shop drawings.

3.2 PREPARATION

A. Coat metal sleeve surfaces below grade, in contact with cementitious surfaces, and in contact with dissimilar metals with asphaltic paint.

3.3 INSTALLATION

A. Install flagpole, base assembly, and fittings in accordance with Manufacturer's instructions and shop drawings.

B. Electrically ground flagpole installation.

C. Install foundation plate and centering wedges for flagpole base set in concrete base and fasten. Fill foundation tube sleeve with sand and compact.

D. Set aluminum flash collar in bed of polyurethane sealant.

3.4 ERECTION TOLERANCES

A. Section 01400 - Quality Requirements: Tolerances.

B. Maximum Variation From Plumb: 1 inch.

3.5 ADJUSTING

A. Section 01700 - Execution Requirements: Testing, adjusting, and balancing.

B. Clean surfaces.

C. Adjust operating devices so halyard and flag function smoothly.

END OF SECTION

SECTION 10440
INTERIOR SIGNAGE

PART 1 - GENERAL

1.1 SUMMARY

A. Section includes interior signs.

B. Related Sections:
   1. Section 15075 - Mechanical Identification.

1.2 REFERENCES

A. Standards of the following as referenced:
   1. American National Standards Institute (ANSI).

B. Industry standards:
   1. Department of Justice, Office of the Attorney General, "Americans with Disabilities Act", Public Law 101-336, (ADA)
   2. ANSI A117.1: Providing Accessibility and Useability for Physically Handicap People, 1986 edition
   3. Federal Register Part III, Department of Justice, Office of the Attorney General, 28 CFR Part 36: Nondiscrimination on the Basis of Disability by Public Accommodations and in Commercial Facilities, Final Rule, July 26, 1991
   4. Federal Register Part II, Architectural and Transportation Barriers Compliance Board, 36 CFR Part 1191: Americans with Disabilities Act (ADA) Accessibility Guidelines for Buildings and Facilities; Amendment to Final Guidelines, September 6, 1991.

1.3 SUBMITTALS

A. Section 01330 - Submittal Procedures: Submittal procedures.

B. Shop Drawings: Indicate sign styles, lettering font, foreground and background colors, locations, overall dimensions of each sign.

C. Samples: Submit two signs, in size illustrating type, style, letter font, and colors specified; method of attachment.

D. Manufacturer's Installation Instructions: Submit installation template and attachment devices.

1.4 QUALITY ASSURANCE

A. Provide products of acceptable Manufacturers that have been in satisfactory use in similar service for three years. Use experienced installers.

B. Deliver, handle, and store materials in accordance with Manufacturer's instructions.

C. Comply with governing codes and regulations.

D. Regulations: ADAAG / TAS (Texas Accessibility Standards)

1.5 DELIVERY, STORAGE, AND HANDLING

A. Section 01600 - Product Requirements: Product storage and handling requirements.

B. Package signs, labeled in name groups.

C. Store adhesive attachment tape at ambient room temperatures.

1.6 ENVIRONMENTAL REQUIREMENTS

A. Section 01600 - Product Requirements: Environmental conditions affecting products on site.

B. Do not install signs when ambient temperature is lower than recommended by Manufacturer.

C. Maintain this minimum temperature during and after installation of signs.

PART 2 - PRODUCTS

2.1 INTERIOR SIGNS

A. Manufacturers:
1. APCO Graphics
2. ASI Sign Systems
3. Corpus Christi Stampworks
4. Best Signs
5. Substitutions: Section 01600 - Product Requirements.

2.2 COMPONENTS

A. Injection Molded Signs: Acrylic plastic:
1. Sign Color: Color as selected from Manufacturers full range of colors
2. Character Color: Contrasting color
3. Total Thickness: 1/8 inch
4. Height: 3 inches
5. Edges: Beveled
6. Character Font: Helvetica.

B. Raised Letter Signs, Base Material: Solid color acrylic plastic:
   1. Total Thickness: 1/8 inch
   2. Height: 3 inches
   3. Edges: Beveled
   4. Character Font: Helvetica.

C. Raised Character Size and Style: Acrylic plastic, character adhered to base material:
   1. Character Color: White
   2. Character Thickness: 1/8 inch
   3. Edges: Beveled
   4. Character Font: Helvetica
   5. Character Case: Upper case.

D. Graphic Style: Handicapped type.

2.3 ACCESSORIES

A. Mounting Hardware: Per Manufacturers standard

PART 3 - EXECUTION

3.1 EXAMINATION

A. Section 01310 - Project Management and Coordination: Verification of existing conditions before starting Work.

3.2 INSTALLATION

A. Install signs after surfaces are finished, in locations scheduled. Install signage holders in locations with mounting types indicated in accord with reviewed shop drawings. Square, plumb, and level units.

B. Install materials and systems in proper relation with adjacent construction and with uniform appearance. Coordinate with work of other sections.

C. Position strike side of door; level. Conform to ADA requirements for tactile graphics signage.

3.3 CLEANING

A. Clean exposed surfaces not more than 48 hours prior to Date of Substantial Completion in accord with Manufacturers written cleaning instructions.

3.4 SCHEDULES

A. Service Room Signs: Plaque signs, 3 inches high, face color, core color, "CONFERENCE ROOM", “MEN”, “WOMEN”, “TELEPHONE/COMMUNICATIONS ROOM”, "STORAGE ROOM", and "ELECTRICAL ROOM"; at each respective room location.

B. Rest Room Door Graphic: 6 inches high, "male" and "female" graphic image; color, located on each rest room door.

END OF SECTION

SECTION 10500
LOCKERS

PART 1 - GENERAL

1.1 SUMMARY

A. Section includes metal lockers, accessories and locker benches.

B. Related Sections:
   1. Section 06114 - Wood Blocking and Curbing: Wood grounds and attachment strips.

1.2 REFERENCES

A. ASTM International:
   1. ASTM A653/A653M - Standard Specification for Steel Sheet, Zinc-Coated (Galvanized) or Zinc-Iron Alloy-Coated (Galvannealed) by the Hot-Dip Process.

1.3 SUBMITTALS

A. Section 01330 - Submittal Procedures: Submittal procedures.

B. Shop Drawings: Include plans, elevations, sections, details, and attachments to other work.
   1. Show base, sloping tops, filler panels and other accessories.
   2. Include locker identification system

C. Product Data: Submit data on locker types, sizes, accessories and installation instructions.

D. Samples: Submit two 3 x 6 inches in size, of each color selected; applied to specified base metal.
   1. Samples for Initial Selection: For units with factory-applied color finishes.

E. Manufacturer's Installation Instructions: Installation instructions, submit installation template and attachment devices.

F. Maintenance Data: For adjusting, repairing, and replacing locker doors and latching mechanisms to include in maintenance manuals.

G. Warranty: Special warranty specified in this Section.

1.4 QUALITY ASSURANCE

A. Installer Qualifications: An authorized representative of metal locker Manufacturer for installation and maintenance of units required for this Project.

B. Source Limitations: Obtain metal lockers and accessories through one source from a single Manufacturer.

C. Product Options: Drawings indicate size, profiles, and dimensional requirements of metal lockers and are based on the specific system indicated. Refer to Division 1 Section "Product Requirements."
   1. Do not modify intended aesthetic effects, as judged solely by Architect, except with Architect's approval. If modifications are proposed, submit comprehensive explanatory data to Architect for review.

D. Regulatory Requirements: Where metal lockers are indicated to comply with accessibility requirements, comply with the U.S. Architectural & Transportation Barriers Compliance Board's "Americans with Disabilities Act (ADA), Accessibility Guidelines for Buildings and Facilities (ADAAG)". Comply with Texas Accessibility Standards (TAS) Guidelines.
   1. Provide not less than 1 shelf located no higher than 48 inches above the floor for forward 54 inches above the floor for side reach.
   2. Provide 1 shelf located at bottom of locker no lower than 15 inches above the floor for forward 9 inches above the floor for side reach.
   3. Provide hardware that does not require tight grasping, pinching, or twisting of the wrist, and that operates with a force of not more than 5 lbf.

1.5 WARRANTY

A. Special Warranty: Manufacturer's standard form in which Manufacturer agrees to repair or replace components of metal lockers that fail in materials or workmanship, excluding finish, within specified warranty period.
   1. Failures include, but are not limited to, the following:
      a. Structural failures.
      b. Faulty operation of latches and other door hardware.
   2. Damage from deliberate destruction and vandalism is excluded.

B. Warranty Period for Metal Lockers: Two years from date of Substantial Completion.

1.6 EXTRA MATERIALS

A. Furnish extra materials described below, before construction begins, that match products installed and that are packaged with protective covering for storage and identified with labels describing contents.
   1. Full-size units of the following metal locker hardware items equal to 10 percent of amount installed for each type and finish installed, but no fewer than 5 units:
      a. Identification plates.
      b. Hooks.

1.7 DELIVERY, STORAGE, AND PROTECTION

A. Section 01600 - Product Requirements: Product storage and handling requirements.

B. Protect locker finish and adjacent surfaces from damage.

PART 2 - PRODUCTS

2.1 LOCKERS

A. Manufacturers:
1. List Industries, Inc.
2. Lyon Metal Products, Inc.
3. Penco Products, Inc.
4. Republic Storage Systems Co., Inc.
5. Substitutions: Section 01600 - Product Requirements.

B. Product Description: Lockers, Free standing full height single tier lockers; with no metal base; with sloped tops; and padlock hasps.

2.2 COMPONENTS: 18” x 18” x 72” ATHLETIC LOCKERS-perforated with diamond – shape pattern

A. Sheet Steel: ASTM A653/A653M, commercial quality, coating class G90, stretcher leveled; to the following minimum thicknesses:
1. Body and Shelf: 16 gage inch
2. Backs: 18 gage inch
3. Door : 14 gage inch; doors over 15” wide and over 30” high shall have a 3” wide full height 20 ga. reinforced pan welded to the inside face of the door on 6” centers
4. Door Frame: 14 ga.
5. Sides, Tops, Bottoms & Shelves: 16 ga.
6. Hinges: 14 gage inch
7. Sloping Top: 20 gage inch
8. Trim: 20 gage inch.

2.3 ACCESSORIES

A. For Each Locker: Three single prong wall hooks and one ceiling double prong hook.

B. Number Plates: polished alum. 2 ¼” wide x 1” high with black numerals.

C. Locker Benches: Stationary type; bench top of laminated red oak species wood, stained, sealed and varnished; pedestals of brushed chrome steel, 19 inches high.
1. ADA bench: 24” x 48” x 1 ¼” thick with four pedestals
2. Shower bench: 9 1/2” x 48” x 1 ¼” thick with four pedestals.

2.4 FABRICATION

A. Locker Units:
1. Width: 12 inches
2. Depth: 15 inches
3. Height: 72 inches
4. Configuration: double tier
5. Mounting: Free standing

6. Base: Metal base to be mounted on concrete base
7. Base Height: 4 inch
8. Top: Sloped metal with closures
9. Locking: Equipped for padlock hasps
10. Ventilation Method: Louvered top and bottom frame and top and bottom of door
11. Type: Conventional.

B. Locker Body: Formed and flanged; with steel stiffener ribs; electric spot welded.

C. Frames: Formed channel shape, welded and ground flush, welded to body, resilient gaskets and latching for quiet operation.

D. Doors: Hollow channel construction, 1-3/16 inch thick; welded construction, channel reinforced top and bottom with intermediate stiffener ribs, grind and finish edges smooth.

E. Hinges: Two for doors under 42 inches high; three for doors over 42 inches high; weld securely to locker body and door.

F. Locking device supplied by Owner.

G. Number Plates: Furnish rectangular shaped aluminum plates. Form numbers ½" inch high of block font style, in contrasting color.

H. Furnish ventilation openings at top and bottom of each locker.

I. Form recess for operating handle and locking device.

J. Finish edges smooth without burrs.

K. Fabricate sloped metal tops, ends and closure pieces.

L. Furnish end panels and filler strips.

M. Fabricate 4 inch high steel bases with end closures.

2.5 FACTORY FINISHING

A. Clean, degrease, and neutralize metal; prime and finish with two coats of baked enamel.

B. Paint locker units of 1 color throughout.

C. Color: color as selected from Manufacturer's standard range.

PART 3 - EXECUTION

3.1 EXAMINATION

A. Section 01300 - Administrative Requirements: Coordination and project conditions.

B. Take site dimensions affecting this work

C. Verify that field measurements are as indicated on shop drawings.

D. Verify prepared bases are in correct position and configuration.

E. Verify bases and embedded anchors are properly sized.

3.2 INSTALLATION

A. Install lockers plumb and square.

B. Place and secure on prepared base.

C. Secure lockers with anchor devices to suit substrate materials. Secure both to wall and to base.

D. Bolt adjoining locker units together to provide rigid installation.

E. Install end panels, filler panels, sloped tops, and bases. Utilize concealed fasteners.

F. Install accessories.

G. Replace components not operating smoothly.

H. Protect metal lockers from damage, abuse, dust, dirt, stain, or paint.

I. Do not permit metal locker use during construction.

3.3 CLEANING

A. Section 01700 - Execution Requirements: Final cleaning.

B. Clean locker interiors and exterior surfaces.

END OF SECTION

SECTION 10523
FIRE EXTINGUISHERS AND CABINETS

PART 1 - GENERAL

1.1 SUMMARY

A. Section includes fire extinguishers; fire blankets; fire extinguisher cabinets; and brackets for wall mounting.

B. Related Sections:
1. Section 06114 - Wood Blocking and Curbing: Wood blocking and shims
2. Section 09900 - Paints and Coatings: Field applied paint finish

1.2 REFERENCES

A. National Fire Protection Association:
1. NFPA 10 - Standard for Portable Fire Extinguishers.

B. Underwriters Laboratories Inc.:
1. UL - Fire Protection Equipment Directory.

1.3 PERFORMANCE REQUIREMENTS

A. Conform to NFPA 10 and applicable code.

B. Provide extinguishers classified and labeled by Underwriters Laboratories Inc. for purpose specified and indicated.

C. Provide fire extinguisher cabinets classified and labeled by Underwriters Laboratories Inc. for purpose specified and indicated.

1.4 SUBMITTALS

A. Section 01330 - Submittal Procedures: Submittal procedures.

B. Shop Drawings: Indicate cabinet physical dimensions, rough-in measurements for recessed cabinets, locations, and fire ratings.

C. Product Data: Submit extinguisher operational features, color and finish, and anchorage details.

D. Manufacturer's Installation Instructions: Submit special criteria and wall opening coordination requirements.

E. Manufacturer's Certificate: Certify Products meet or exceed specified requirements.

1.5 CLOSEOUT SUBMITTALS

A. Section 01700 - Execution Requirements: Closeout procedures.

B. Operation and Maintenance Data: Submit test, refill or recharge schedules and re-certification requirements.

1.6 ENVIRONMENTAL REQUIREMENTS

A. Section 01600 - Product Requirements: Environmental conditions affecting products on site.

B. Do not install extinguishers when ambient temperature is capable of freezing extinguisher ingredients.

PART 2 - PRODUCTS

2.1 FIRE EXTINGUISHERS

A. Manufacturers:
1. Larsen's Manufacturing Co. Model MP Series MP10
2. J. L. Industries Model Cosmic
3. Substitutions: Section 01600 - Product Requirements.

B. Dry Chemical Type: Cast steel tank, with pressure gage; Class A, B, C, Size 10 size and classification as scheduled.

C. Extinguisher Finish: Steel, enamel to color as selected.

2.2 FIRE EXTINGUISHER CABINETS (FEC)

A. Manufacturers:
1. Larsons Model Occult Series, O-2409
2. J. L. Industries Model Academy
3. Substitutions: Section 01600 - Product Requirements.

B. Metal: Formed sheet steel, galvanized; 0.036 inch thick base metal.

C. Configuration: Semi-recessed type, sized to accommodate accessories exterior nominal dimensions of inch 10 wide x 24 inch high x 6 inch deep.

D. Trim Type: Returned to wall surface, with 2 ½" inch projection, ¾" inch trim wide face.

E. Aluminum Door with pull handle, Solid type: Reinforced for flatness and rigidity; clear, satin finish.

F. Cabinet Mounting Hardware: Appropriate to cabinet.

G. Form cabinet enclosure with right angle inside corners and seams. Form perimeter trim.

H. Pre-drill for anchors.

I. Hinge doors for 180 degree opening with continuous piano hinge. Furnish roller type catch.

J. Weld, fill, and grind components smooth.

K. Finishing Cabinet Exterior Trim and Door: Clear Anodized, satin finish with Diecut lettering (black letters) with Vertical lettering style.

L. Finishing Cabinet Interior: white, baked enamel.

2.3 ACCESSORIES

A. Graphic Identification: FIRE EXTINGUISHER.

2.4 MOUNTING BRACKETS (FEB)

A. Mounting Brackets: Manufacturer's standard galvanized steel, designed to secure fire extinguisher to wall or structure, of sizes required for types and capacities of fire extinguishers indicated, with plated or baked-enamel finish.
   1. Color: Red.

B. Identification: Lettering complying with authorities having jurisdiction for letter style, size, spacing, and location. Locate as indicated by Architect.
   1. Identify bracket-mounted fire extinguishers with the words "FIRE EXTINGUISHER" in red letter decals applied to mounting surface.
      a. Orientation: Vertical Horizontal.

PART 3 - EXECUTION

3.1 EXAMINATION

A. Section 01300 - Administrative Requirements: Coordination and project conditions.

B. Verify rough openings for cabinet are correctly sized and located.

C. Examine walls and partitions for suitable framing depth and blocking where semi-recessed cabinets will be installed.

D. Examine fire extinguishers for proper charging and tagging.
   1. Remove and replace damaged, defective, or undercharged units.

E. Proceed with installation only after unsatisfactory conditions have been corrected.

3.2 INSTALLATION

A. Prepare recesses for semi-recessed fire-protection cabinets as required by type and size of cabinet and trim style.

B. Install cabinets plumb and level in wall openings, 48 inches from finished floor to fire extinguisher handle. Verify and install according with most recent codes and regulations.

C. Fire-Protection Cabinets: Fasten fire-protection cabinets to structure, square and plumb.
   1. Unless otherwise indicated, provide semi-recessed fire-protection cabinets.
   2. Fasten mounting brackets to inside surface of fire-protection cabinets, square and plumb.
   3. Secure rigidly in place.

D. Place extinguishers and accessories in cabinets.

E. Mounting Brackets: Fasten mounting brackets to surfaces, square and plumb, at locations indicated.

3.3 ADJUSTING AND CLEANING

A. Remove temporary protective coverings and strippable films, if any, as fire-protection specialties are installed, unless otherwise indicated in Manufacturer's written installation instructions.

B. Adjust fire-protection cabinet doors to operate easily without binding. Verify that integral locking devices operate properly.

C. On completion of fire-protection cabinet installation, clean interior and exterior surfaces as recommended by Manufacturer.

D. Touch up marred finishes, or replace fire-protection cabinets that cannot be restored to factory-finished appearance. Use only materials and procedures recommended or furnished by fire-protection cabinet Manufacturer.

E. Replace fire-protection cabinets that have been damaged or have deteriorated beyond successful repair by finish touchup or similar minor repair procedures.

3.4 SCHEDULES

A. Place 4 cabinets and extinguishers (FEC) where directed by Architect / Engineer.

B. Place 6 brackets and extinguishers (FEB) where directed by Architect / Engineer.

END OF SECTION

SECTION 10800
TOILET ACCESSORIES

PART 1 - GENERAL

1.1 SUMMARY

A. Section includes toilet accessories; shower accessories; and utility room accessories.

B. Related Sections:
1. Section 06114: In-wall framing and plates for support of accessories
2. Section 09300 - Tile: Ceramic washroom accessories
3. Section 10170 - Plastic Toilet Compartments

1.2 REFERENCES

A. ASTM International:
1. ASTM A123/A123M - Standard Specification for Zinc (Hot-Dip Galvanized) Coatings on Iron and Steel Products
2. ASTM A269 - Standard Specification for Seamless and Welded Austenitic Stainless Steel Tubing for General Service
3. ASTM A653/A653M - Standard Specification for Steel Sheet, Zinc-Coated (Galvanized) or Zinc-Iron Alloy-Coated (Galvannealed) by the Hot-Dip Process
4. ASTM A666 - Standard Specification for Austenitic Stainless Steel Sheet, Strip, Plate, and Flat Bar
5. ASTM B456 - Standard Specification for Electrodeposited Coatings of Copper Plus Nickel Plus Chromium and Nickel Plus Chromium
6. ASTM C1036 - Standard Specification for Flat Glass.

B. Federal Specification Unit:
1. FS A-A-3002 - Mirrors, Glass.

1.3 SUBMITTALS

A. Section 01330 - Submittal Procedures: Submittal procedures.

B. Product Data: Submit data on accessories describing size, finish, details of function, attachment methods.
1. Construction details and dimensions
2. Anchoring and mounting requirements, including requirements for cutouts in other work and substrate preparation
3. Material and finish descriptions
4. Features that will be included for Project
5. Manufacturer's warranty.

C. Product Schedule: Indicating types, quantities, sizes, and installation locations by room of each accessory required. Utilize numbers indicated in toilet accessory schedule in this specification.

1. Identify locations using room designations indicated on Drawings.
2. Identify products using designations indicated on Drawings.

D. Manufacturer's Installation Instructions: Submit special procedures, conditions requiring special attention.

E. Maintenance Data: For toilet and bath accessories to include in maintenance manuals.

1.4 COORDINATION

A. Section 01300 - Administrative Requirements: Coordination and project conditions.

B. Coordinate the Work with placement of internal wall reinforcement and reinforcement of toilet partitions to receive anchor attachments.

1.5 WARRANTY

A. Special Mirror Warranty: Manufacturer's standard form in which Manufacturer agrees to replace mirrors that develop visible silver spoilage defects and that fail in materials or workmanship within specified warranty period.
1. Warranty Period: 15 years from date of Substantial Completion.

PART 2 - PRODUCTS

2.1 TOILET AND BATH ACCESSORIES

A. Manufacturers:
1. American Specialties, Inc. Model Traditional Collection
2. Bobrick Washroom Accessories Model Classic Series
3. Bradley Corp. Model Contemporary Series
4. Substitutions: Section 01600 - Product Requirements.

2.2 COMPONENTS

A. Accessories - General: Shop assembled, free of dents and scratches and packaged complete with anchors and fittings, steel anchor plates, adapters, and anchor components for installation.
1. Grind welded joints smooth
2. Fabricate units made of metal sheet of seamless sheets, with flat surfaces.

B. Keys: Furnish keys for each accessory to Owner.

C. Stainless Steel Sheet: ASTM A 666, Type 304. Satin finish.

D. Stainless Steel Tubing: ASTM A269, stainless steel.

E. Mirror Glass: Float glass, Type I, Class 1, Quality q2 (ASTM C 1036), with silvering, copper coating, and suitable protective organic coating to copper backing in accordance with FS A-A-3002.

F. ABS Plastic: Acrylonitrile-butadiene-styrene resin formulation.

G. Adhesive: Two component epoxy type, waterproof.

H. Fasteners: Screws, bolts, and other devices of same material as accessory unit and tamper-and-theft resistant where exposed, and of galvanized steel where concealed.

I. Expansion Shields: Fiber, lead, or rubber as recommended by accessory Manufacturer for component and substrate.

2.3 TOILET ROOM ACCESSORIES

A. Toilet Paper Dispenser with Shelf: Double roll surface-mounted, dual side-by-side partition mounting, stainless steel unit with pivot hinge.
   1. Product: B-2840 manufactured by Bobrick.

B. Combination Towel Dispenser/Waste Receptacle: Recessed with projecting waste receptacle, stainless steel; seamless wall flanges, continuous piano hinges.
   1. Waste receptacle liner: Reusable, heavy-duty vinyl
   2. Towel dispenser capacity: 600 C-fold or 800 multifold
   3. Waste receptacle capacity: 12 gallons
   4. Product: B-3942 manufactured by Bobrick.

C. Paper Towel Dispenser: Folded paper type, stainless steel, semi-recessed, with viewing slots on sides as refill indicator.
   1. Capacity: 400 C-fold minimum
   2. Product: B-262 manufactured by Bobrick.

D. Soap Dispenser: Liquid soap dispenser, wall-mounted, surface, for with cover and horizontal stainless steel tank and working parts; push type soap valve, check valve, and window gage refill indicator.
   1. Minimum Capacity: 40 ounces
   2. Product: B-40 manufactured by Bobrick.

E. Mirrors: Stainless steel framed, 6 mm thick tempered glass mirror.
   1. Size: As indicated on Drawings
   2. Frame: angle shapes, with mitered and welded and ground corners bright annealed finish
   3. Backing: Full-mirror sized, minimum 0.03 inch galvanized steel sheet and nonabsorptive filler material
   4. Product: B-290 3672 manufactured by Bobrick
   5. Product: B-290 3624 manufactured by Bobrick

F. Grab Bars: Stainless steel, 1-1/2 inches outside diameter, minimum 0.05 inch wall thickness, nonslip grasping surface finish, concealed flange mounting; 1-1/2 inches clearance between wall and inside of grab bar.
   1. Length and configuration: As indicated on Drawings, comply with ADA and TAS requirements.
   2. Product: B-6806x36 and B-6806x42 manufactured by Bobrick.

G. Partition-Mounted Toilet Tissue Dispenser and Sanitary Napkin Disposal Unit: Stainless steel back-to-back partition mounting with adjustable flanges, self-closing door, locking bottom panel with full-length stainless steel piano-type hinge, removable receptacle.
   1. Product: B-3570 manufactured by Bobrick.

H. Tissue Dispenser and Sanitary Napkin Disposal Unit: Stainless steel, recessed, self-closing door, locking bottom panel with full-length stainless steel piano-type hinge, removable receptacle.
   1. Product: B-35701 manufactured by Bobrick.

I. Rod, Rings and Curtain: At each shower
   1. Bobrick: B-6107 Classic Series Extra-Heavy-Duty Shower Curtain Rod with 2 ½" Square Flange. Type-304 stainless steel, satin finish, 18-gauge
   2. Bobrick: 204-2 Vinyl Shower Curtain (42"W x 72" H)
   3. Bobrick: 204-1 Shower Curtain Hooks, seven (7) required per each shower curtain location.

J. Surface Mounted Hat, Coat, and Robe Hook: 1 each at each shower and at each bench.
   1. Bobrick: B-7671, Classic Series
   2. Type: Bright polished stainless steel.

K. Undercounter Lavatory Protective Enclosure
   1. Truebro, Inc.: Lav Shield, molded rigid vinyl, high impact stain resistant, white color.

2.4 UTILITY ROOM ACCESSORIES

A. Combination Utility Shelf/Mop and Broom Holder: 0.05 inch thick stainless steel, Type 304, with 1/2 inch returned edges, 0.06 inch steel wall brackets.
   1. Drying rod: Stainless steel, 1/4 inch diameter
   2. Hooks: 3, 0.06 inch stainless steel rag hooks at shelf front
   3. Mop/broom holders: 4 spring-loaded rubber cam holders at shelf front
   4. Length: 36 inches
   5. Length: Manufacturer's standard length for number of holders/hooks
   6. Product: B-224x36 manufactured by Bobrick.

2.5 FACTORY FINISHING

A. Stainless Steel: No. 4 satin brushed finish.

B. Back paint components where contact is made with building finishes to prevent electrolysis.

PART 3 - EXECUTION

3.1 EXAMINATION

A. Section 01300 - Administrative Requirements: Coordination and project conditions.

B. Verify exact location of accessories for installation.

C. Verify field measurements are as indicated on product data.

D. See Section 06100 for installation of blocking in walls and ceilings.

3.2 PREPARATION

A. Deliver inserts and rough-in frames to site for timely installation.

B. Provide templates and rough-in measurements as required.

3.3 INSTALLATION

A. Install accessories according to Manufacturers' written instructions, using fasteners appropriate to substrate indicated and recommended by unit Manufacturer. Install units level, plumb, and firmly anchored in locations and at heights indicated.

B. Grab Bars: Install to withstand a downward load of at least 250 lbf, when tested according to method in ASTM F 446.

C. Mounting Heights and Locations: As required by accessibility regulations.

3.4 ADJUSTING AND CLEANING

A. Adjust accessories for unencumbered, smooth operation. Replace damaged or defective items.

B. Remove temporary labels and protective coatings.

C. Clean and polish exposed surfaces according to Manufacturer's written recommendations.

3.5 SCHEDULES

A. See drawings for proposed locations.

END OF SECTION

SECTION 11140

FUEL DISPENSING SYSTEM

PART 1 - GENERAL

1.1 RELATED DOCUMENTS

A. The general provisions of the Contract, including General and Supplementary Conditions, apply to the work specified in this Section.

1.2 RELATED WORK SPECIFIED ELSEWHERE

A. All specification sections under Divisions 15 and 16 of the Contract Documents.

1.3 SCOPE

A. Provide all equipment, materials, labor, supervision, and services necessary for or incidental to the installation of a complete functioning unleaded gasoline and diesel fuel dispensing system.

B. Work includes:
1. Two UL 2085 Fireguard above ground cylindrical tanks for diesel and gasoline.
2. Tank monitoring and fuel management systems, remote mechanical dispensers, submersible pumps, nozzles, filters, hoses, swivels, breakaways, high hang retractors, spill control, emergency/updraft venting, pipe, valves and fittings.

1.4 QUALIFICATIONS

A. Manufacturer: company specializing in the Manufacturer of products specified in this Section with minimum of five years experience.

B. Installation of equipment shall be performed by qualified personnel possessing a current TCEQ certification for aboveground and underground tank installations and removal and by the equipment manufacturer of the tank monitoring and fuel management system manufacturer of the equipment installed. Calibration of dispensers shall be performed by qualified personnel possessing a current registration by the Texas Department of Agriculture.

1.5 SUBMITTALS

A. Submit under provisions of UGC (the “Uniform General Conditions”) and Special Conditions Section of the Specifications.

B. Mark all submittal literature to indicate the precise selection of materials and equipment being submitted. Note that if the specific model or material is not indicated in the submittal, and there is more than one choice possible, the submittal may be rejected and resubmittal will be required.

C. Changes in Contract requirements will not be granted and shall not be implied by approval of submitted alternative materials and equipment. Changes will only be effected through the Change Order process, in writing.

D. Proposed Products List: Include all equipment and materials specified.

1.6 QUALITY ASSURANCE

A. Use adequate numbers of skilled workmen who are thoroughly trained and experienced in the necessary crafts and who are completely familiar with the specified requirements and the methods needed for proper performance of the work of this Section.

B. Without additional cost to the Owner, provide such other labor and materials as are required to complete the work of this Section in accordance with the requirements of governmental agencies having jurisdiction, regardless of whether such materials and associated labor are called for elsewhere in these Contract Documents.

C. When requested, provide the Engineer or Architect with Manufacturer's certificate that materials meet or exceed minimum requirements as specified.

D. Standards: the specifications and standards of the following organizations are by reference made a part of these specifications. All mechanical work, unless otherwise indicated, shall comply with the requirements and recommendations wherever applicable:

1. National Fire protection Association (NFPA) 30 Flammable and combustible Liquids Code
2. National Fire Protection Association (NFPA) 30A, Automotive and Marine Service Station code
3. Underwriters Laboratories, Inc. (UL) 2085, Protected Tank and Fire Resistive Tank Listing, with ballistic and impact resistance ratings
4. Underwriters Laboratories, Inc. (UL) 142, Steel Aboveground Tanks for Flammable and Combustion Liquids
5. Underwriters Laboratories, Inc. (UL) 1238, Control Equipment for Use with Flammable Liquid Dispensing Devices
6. Underwriters Laboratories, Inc. (UL) 567, Pipe Connectors for Flammable and Combustible Liquids and LP-Gas
7. Underwriters laboratories, Inc. (UL) 860, Pipe Unions for Flammable and Combustible Liquids and Fire Protection Service
8. Underwriters Laboratories, Inc. (UL) 87, Power-operated Dispensing Devices for Petroleum Products
9. Underwriters Laboratories, Inc. (UL) 842, Valves for Flammable Fluids
10. Underwriters Laboratories, Inc. (UL) 1709
11. American Petroleum Institute (API)
12. Petroleum Equipment Institute (P.E.I.) - Recommended Practice for Installation of Aboveground Storage Systems for Motor Vehicle Fueling
13. National Electric Code: NEC 501-Class I locations and NEC 514 - Gasoline Dispenser and Service Station
14. National Resource Conservation Commission
15. Texas Commission on Environmental Quality.

PART 2 - PRODUCTS

2.1 FUEL TANKS AND OVERFILL PROTECTION

A. Provide aboveground cylindrical tanks. Warning all other shape tanks will be rejected and are prohibited. Fuel storage system shall be composed of two above ground, insulated tanks with secondary containment. Tanks shall be utilized for unleaded gasoline and diesel fuel but shall be capable of containing 10% concentration of methanol and 85% alcohol blended fuels. .

B. The insulated tanks shall rest a minimum of 4" above the finished grade. The entire encased tank assembly shall be a Fireguard UL listed in accordance with UL Subject 2085. Tanks shall be provided with means to anchor to slab.

C. Tanks shall be equipped with a monitor port utilized for the detection of leaks from the primary to the secondary tank. The monitor port shall be a minimum of 2" schedule 40 steel and suitable for electronic monitoring.

D. Provide tank equipment listed below or engineer approved equal:

1. Provide primary and secondary emergency venting in accordance with NFPA 30. Provide permanent tag affixed to tanks listing required venting SCFH of the primary and secondary vaults.
2. Provide 2" updraft vent with vent cap terminating a minimum 12' above grade to top of vent cap. When the updraft vent is covered by fuel island canopy the vent is required to extend a minimum of 24" above the top of the canopy and at least 24" above tank.
3. Tanks shall have future conversion capability suitable for future installation of Stage I & II vapor recovery systems.
4. Opening for submersible pump shall be 4" female threaded pipe suitable for design of pump.
5. Provide 2" male threaded nipple for a wheel type clock gauge.
6. The aboveground storage tank system shall include a UL listed remote fill above ground storage tank spill container with poppeted kamvalok adaptors and spring loaded valve assemblies, couplers and dust caps. The remote fill box shall be heavy gauge steel powder coated not less than 30 gallons with adjustable legs and booted 4" entry holes with a normally closed valve to release spilled product into an approved container. Provide a UL Listed shut-off valve in the top of the tank set at 95% fill capacity complete with drop tube for complete submerged filling. Provide tank inlet spout adapter with crossbar and cam lock coupler with a 2" steel pipe flanged connection at valve in the vertical plane for shut off valve accessibility. Provide a means to stick tank with a top adapter and quick release lockable cap. On unleaded tank only, provide two 4" male nipples for future Stage I and Stage II Vapor Recovery.
7. Tanks shall be warranted against leakage for period of 30 years from the date of installation. All pumps, dispensers, dispenser equipment, pipe valves and fittings and tank appurtenances shall be warranted for Manufacturer defects for a period of 1 year from the date of installation.
8. Tank system shall be as listed below or approved equal.

E. Acceptable Manufacturers - Aboveground Storage Tanks:
   1. UL2085 - Fireguard

2.2 REMOTE DISPENSER UNITS

A. Acceptable Manufacturers:
   1. Gasboy
   2. OPW
   3. Bennett

B. The Contractor will furnish new remote dispenser units in accordance with plans and install and calibrate these units per the following standards:
   1. Dispenser units shall be equipped with a heavy-gauge corrosion-resistant cabinet, removable panels, bolt construction, weather-lapped housing joints, rubber vibrator dampers and mechanical totalizers. Dispensers shall be capable of being field calibrated and shall be constructed for heavy duty usage.
   2. Dispenser units shall be equipped with a device that will register to 99.9 gallons and totalize to not less than 99,999.99 gallons. Totalizer shall be non-resettable. Dispensing system shall also include a pulsing device with capabilities to interface with a Fuel Control System (FCS).
   3. Dispenser units shall be equipped with a two (2), three (3) or four (4) piston meter for accuracy.
   4. The unit shall meet the current National Bureau of Standards Handbook No. 44, covering retail fuel type pumps, and shall be certifiable by the Weights and Measures Division of the Texas Department of Agriculture. If a two (2) product unit is requested, the unit must meet this requirement and all the other requirements stated in this entire specification for both product dispensing systems.
   5. The dispenser shall include an in-line, externally mounted, replaceable fuel filter with a drain valve and a internal blank spin on filter.
   6. Gasoline dispenser units shall be capable of accepting future Stage II vapor recovery vacuum assist pumps.
   7. The dispenser will be equipped with a pipe coupling to allow disconnection and removal of the dispenser. The coupling shall be installed as close as possible to the shear valve (inside dispenser cabinet) so as to provide for a fully functioning shear valve and allow removal of the dispenser.
   8. The Contractor shall supply and install dispenser pedestals for above-ground piping and shear.
   9. Provide a pre-manufactured remote base by Bravo Systems B-8600 series with shear valve OPW#10 series.

2.3 PUMPS

A. Acceptable Manufacturers - Submerged Pumps:
   1. FE Petro
   2. Red Jacket

B. The Contractor will furnish new pumps in accordance with plans and install and calibrate these units per the following standards:
   1. Submersible pumps shall be appropriate horse-power. The pump capacity shall not be less than 12 gallons per minute (gpm) at each nozzle, with each nozzle operating with one (1) foot of fuel remaining in the tank at any time of the year. A flow test shall be performed by a TCEQ certified testing firm furnished by the Contractor and witnessed by the Engineer.
   2. The bottom of the pumping unit shall be constructed and installed so as to allow removal and pumping of the maximum volume of fuel from the tank (i.e. the bottom of the pump shall be as close to the bottom of the tank as allowed and recommended by a pump Manufacturer).
   3. The bottom of the pumping unit shall be a minimum two (2) inch diameter.
   4. Provide a remote control unit equal to Red Jacket Model 880-041-5.

2.4 DISPENSER NOZZLES AND MISCELLANEOUS EQUIPMENT

A. Acceptable Manufacturers:
   1. OPW 11A Automatic Nozzle with OPWB Fillgard Splash Guard and OPW6 two (2) piece hand insulator
   2. Husky

B. The Contractor will furnish new nozzles, splash guards, hand insulators and hoses in accordance with the plans and specifications, and shall install and calibrate these units per the following standards:
   1. The completed dispenser system individual nozzle shall deliver product at a rate not less than specified above.
   2. The dispenser units shall be equipped with not less than 3/4 inch hydrocarbon-resistant synthetic rubber hose that is not less than 16 feet long. Each hose shall include a half swivel connector with straightening hose at the dispenser and a multi-swivel at the nozzle. Each hose shall be equipped with an individual hose retractor assembly capable of retrieving the hose length specified above. All adjustments and modifications will be performed by the Contractor to ensure that the hose retriever meets the Engineer's requirements. The Contractor shall install an approved emergency breakaway coupling on the dispensing hose.
   3. If a dual product/two (2) hose and/or single product/two (2) hosed unit is supplied, the Contractor shall be responsible for installing a second product line or establishing service so both hoses of the unit are capable of the 10 gpm delivery requirement when the hoses are operating concurrently.
   4. Splash guards and hand insulators shall be provided for each dispenser nozzle.
   5. Hose Retrievers. Hose retrievers (one (1) per hose) shall be Universal Hose Retriever Model 870 with Hosebun Model 100-1+B and hose cable assembly or an approved equal.
   6. Breakaway Hose Connectors. Breakaway hose connectors shall be OPW 66.
   7. Flexible Connectors. Flexible connectors shall be Flex-Ing.
   8. Fillpipe Adaptors with Lockable Top Seal Cap:
      a. Fillpipe adaptors shall be OPW 633T, EMCO Wheaton, Universal, EBW, Pemco. Caps shall be OPW 634TT, EMCO Wheaton, Universal, EBW, Pemco.

b. Fillpipe adaptors and caps shall be installed at all locations indicated on the plans.
c. The Contractor shall provide fuel connections and attachments required during the fuel supply operations, and use for fuel transfer from the fuel truck into the aboveground storage tanks utilizing poppeted kamvalok adaptors and internal spring loaded valve assemblies and kamvalok couplers and dust covers by OPW.

2.5 FUEL MONITORING SYSTEM

A. Acceptable Manufacturers –Fuel Monitoring system:
1. OPW Site Sentinel iSite or equal.

B. Provide an tank monitoring system with a OPW remote isite 15" LCD color mounted inside the building with a single wire connection to the intrinsically safe Vsmart module in a Nema 4 enclosure mounted on the rack near the fuel island with the emergency shut off button. Each device shall require a 120V dedicated circuit.

C. Automatic tank gauging system shall meet requirements The system shall listed by Underwriters Laboratory, and comply with all other applicable national and local standards.

D. System shall include the capability of expanded to 256 probes and / or 1024 sensors. The system shall be equipped 1-barrier including 4-channels per barrier each channel shall monitor up to 4 probes and / or 16 sensors. The unit shall communication with Network Interface thru an Ethernet connection. The system shall be set up to email low and high product alarms and fuel delivery request. The system shall also be set up to print to a local laser printer with the option to print to the internal printer. The system shall be equipped with all necessary hardware or software.

E. Inventory reports shall include inventory records, records of product deliveries, leak test reports, shift reports, and alarm reports, theft reports. Inventory reports shall give current tank status such as tank number, product, inches and gallons of product, inches and volume of water, and product temperature. Shift reports shall include the current tank status plus the net change in gallons that shift. Leak test reports shall include tank inventory at the beginning and ending of the test and pass/fail message. Delivery reports shall include beginning and ending inventories and net gallons delivered. Printer shall be automatic and on demand and shall be programmed to conduct leak tests at a minimum of once in a 35 day period.

F. System Supplier shall furnish console, probes, sensors, relays, remote alarm with test and acknowledge button, wire from console to probes, sensors, relays, 15" LCD and remote alarm.

G. Tank level monitoring system shall include a minimum of two rigid probes suitable for fuel of containing 10% concentration of methanol and 85% alcohol blended fuels, gasoline and diesel products. Probes shall be classified by Underwriters Laboratories and intrinsically safe for use in Class 1, Division 1, Group D hazardous locations. Probes may be magnetorestrictive. System shall have programmable alarm limits to activate on:
1. High product level

2. Low product level
3. High water level
4. Leaks
5. Thefts
6. High High level

H. Console shall provide on-site remote audible alarms or horns shall be provided for Low Product, High Product, Water, Theft, and Leak Check. The Contractor shall be held responsible that each console is fully programmed for all alarms in accordance with the contract specifications. All alarm thresholds shall be user-programmable. Alarms shall be 100 decibels minimum, suitable for outdoor use and include manual acknowledge button.

I. Manufacturer shall provide one year warranty for parts and labor for console, probes, sensors and wire.

J. The entire system including probes shall be fully compatible with the products to be stored including gasohol (ten percent ethanol and 90 percent gasoline mixture), 09.5 percent gasoline, and 9.5 percent Oxinol-50* (4.75 percent methanol and 4.75 percent methanol and a minimum of 2.5 percent cosolvent - the blend may contain a maximum concentration of up to 3.7 weight percent oxygen in the final fuel); MTBE (methyl tertiary butyl ether) - gasoline with up to 20 percent, by volume of MTBE; or diesel fuel.

K. Manufacturer or their authorized representative shall perform start up programming, calibration and installation verification at site. The Contractor shall be liable for all programming. Controller shall include tank set up to account for tilt, material of construction, shape and product. Manufacturer shall conduct an Operations and Maintenance seminar. At the initial seminar, the Owner shall be provided with a detailed summary (in addition to the manual provided prior to work commencing at the site) of the steps required to program, calibrate and operate the equipment. In addition to the initial on-site seminar, the Contractor shall conduct another Operations and Maintenance seminar for the Owner.

L. The remote alarm shall have a NEMA 4 enclosure rating and shall include one red alarm light. It shall include an audible alarm with a test and aknowledge button. The audible alarm shall be silenced up pressing the aknowledge Button but the visual alarm shall not clear until the alarm condition has been corrected. It shall be OPW or approved equal.

M. The level probe shall be of the magnetostrictive type capable of reporting both gross and net product levels and water level as manufactured by OPW or approved equal.

N. The leak sensor shall be of the float switch type for diesel and gasoline and for “alternative” fuels as manufactured by OPW or approved equal.

2.6 PIPE AND PIPE FITTINGS

A. Steel Pipe and Fittings:

1. Above ground pipe shall be Schedule 40 ASTM A120. Fittings and couplings shall be extra heavy malleable iron screw-type. Unions shall be 250/300# with integral seats. Black pipe and fittings shall be used for gasoline fuel pipe. Black

pipe and fittings shall be used for diesel fuel pipe. Vent pipe shall be galvanized steel pipe. Each tank shall be vented individually. All exposed piping and nipples shall be painted.

B. Flexible Connectors:

1. Flexible connectors shall be UL listed stainless steel braided as supplied by Titflex or other approved Manufacturer. Flexible connectors shall use convoluted Teflon inner core rated for all grades of fuel including diesel and ethanol or methanol blends of gasoline. Flexible connection shall include a warranty for a minimum period of 20 years against corrosion. Flexible connectors shall be enclosed in an isolation jacket having equal pressure rating of five to seven psi. Install in accordance with Manufacturer's instructions, do not install at radius less than approved by Manufacturer. All external components of the isolation jacket shall be to non-corrodible. Isolation jacket to be Flex-ing, or equal by approved Manufacturer.

C. Gaskets:

1. Gaskets shall be suitable for gasoline, diesel, gasoline/methane. Gaskets to be Style 780 plant Fibre sheet by American Packing and Gasket Company or equal approved Manufacturer.

2.7 VALVES

A. Gate Valves: Three inch and smaller valves used in fuel lines shall have threaded ends and be installed at all locations as required for a fully functional system. Valves components shall be rated for gasoline, diesel and gasoline/methanol. Packing shall be non-asbestos graphite/aramid fiber. Valves shall be Grinnell Figure no. 3010 or equal as supplied by approved Manufacturers.

B. Shear for dispensers for aboveground tanks shall be OPW or equal.

C. Solenoid Valves: Shall be Morrison or equal with integral pressure relief valve.

D. Overfill Protection: Overfill protection for aboveground tanks shall meet state and federal Codes.

2.8 SIGNS

A. Supply and install eight signs at locations selected by Owner. Four of the signs shall be installed on the sides of the tanks. Signs shall be conspicuous and legible signs reading "No Smoking - Stop Engines" in letters not less than two inches in height and 3/8 inch stroke.

B. Supply and install four signs at locations selected by Owner. Signs shall be conspicuous and legible reading "EMERGENCY SHUT-OFF" in letters not less than two inches in height and 3/8 inch stroke.

C. Supply and install four signs indicating service and contents (i.e. Diesel, Unleaded) of both the dispenser units and tanks.

PART 3 - EXECUTION

3.1 INSTALLATION

A. Install in accordance with Manufacturer's recommendations.

B. Dispensers and pumps shall be installed at locations as shown on the drawings. Contractor shall install dispensers as required and furnish all appurtenances including pressure regulating valves, flexible connectors for a fully operational system. Contractor shall furnish and install all new electrical components including but not limited to conductors, conduit, flexible conduit, fittings, unions, junction boxes, wireways, seal fittings/seal-offs, emergency stops, etc. between the dispensers and a wireway located at the building.

C. EPO-switch shall be an shall be clearly identified and easily accessible and be installed in a remote location more than 20 feet but less than 100 feet from the dispenser units and also in line of sight of the dispenser units. The emergency stop button shall be a manufactured emergency stop control station complete kit with a clear cover and emergency stop signage within enclosure by Power Integrity #IA-ESOC or equal.

D. On-site remote audible alarm or horn with test and acknowledgement button shall be located near tanks as directed by Owner. Alarm shall be activated on high level in tanks and other criteria such as theft, low product, etc.

3.2 PIPING, VALVES AND FITTINGS

A. Materials and Design: Piping, valves, fittings, and related components shall be designed and fabricated from suitable materials, having adequate strength and durability to withstand the operating pressures, structural stress, and exposures to which they may be subjected. Specific requirements are that materials must:
   1. Be compatible with products stored.
   2. Not be damaged by normal operating or test pressures.
   3. Have sufficient integral strength to withstand stress during construction and subsequent operations.
   4. Not deteriorate while exposed to outdoor conditions.

B. Piping Layout: Traps (sumps) in the lines shall be avoided.

C. Piping Requirements: Piping materials shall be compatible with products stores. Piping shall be installed so as to facilitate testing, resist corrosion, and prevent damage from movement of system components.
   1. Inspect all materials for signs of damage and confirm compliance with specifications.
   2. Provide adequate clearance between piping and conduit, nearby structures, and other system components.
   3. Keep pipe, as well as fitting interiors and threads, free from dirt, corrosion, moisture, and debris.
   4. Exercise care to accurately measure and cut pipe, so as to avoid the failure that can occur when pipe fittings are installed under stress.

5. Use pipe sealant (dope or cement) compatible with the piping materials and the product being handled. Wrap ribbon dope with the threads to avoid bunching during tightening. Follow the Manufacturer's preparation and application instructions, giving proper attention to temperature and moisture condition limitations.
6. Install all equipment in accordance with Manufacturer's recommendations.
7. Isolate dissimilar materials using sleeves, dielectric unions, etc., to prevent electrolysis.

D. Piping Workmanship:
1. Inspect pipe-cutting dies frequently and replace when worn.
2. Ream and de-burr pipe ends after cutting.
3. Flexible connectors shall be used at the beginning and end of each product line and, if required to relieve stress, where lines change direction.

3.3 TESTING AND TRAINING

A. System Tests: Tank and piping, as well as the satisfactory operation of monitoring systems shall be proven before the system is placed in operation.

B. The following Tank and Component Tests are required to ensure the integrity of the system:
1. Before placing components in the excavation: 5 psig air test.
2. After pipe assembly but before connection to the tank or dispensers: 50 psig air test or 100% hydrostatic test.
3. Before placing the system in service:
   a. Internal and External Monitoring and Gauging Systems: Manufacturer's recommendations
   b. Tank System: Precision test. (NFPA 329)

C. "As-Built" Drawings: "As-Built drawings of piping, monitoring, and other system components shall be provided by this Installer to the Owner. The documents may take the form of a marked-up set of installation drawings showing the location of piping, conduit, and other significant system components.

D. Component Documentation: Provide the owner with installation and operating instructions for all components of the tank system, recommended test procedures, preventive maintenance schedules, and tank charts that indicate gallons for various depths.

3.4 SAFETY PRECAUTIONS

A. The Contractor shall store or handle gasoline or other flammable liquids in strict accordance with all state fire Marshall Requirements.

B. The Contractor shall provide two new Class 20 B:C fire extinguishers readily available for any work which involves release of product or use of a sparking device. At the end of the project the two fire extinguishers shall be mounted at the EPS switch and the other beside the remote fill box.

C. As a minimum, the Contractor shall take the following precautions:
   1. Eliminate all potential sources of ignition from the area including smoking materials, and nonexplosion proof electrical and internal combustion equipment.
   2. Prevent the generation and discharge of static electricity during venting of flammable vapors.
   3. Prevent the accumulation of vapors at ground level and other key locations.

D. A combustible gas indicator shall be used to check for explosive vapor concentrations. All open flame and spark-producing equipment within the vapor hazard area shall be shut down. Electrical equipment (for example, pumps and portable hand tools) used in the area shall be explosion-proof in accordance with NFPA 70B Class I, Division I, Group D or otherwise approved for use in potentially explosive atmospheres.

E. The Contractor shall clean up all fuel and oil spills related to his operations immediately. Sorbent pads or sweeping compound shall be used for diesel spills. Sorbent pads shall be used for gasoline. Spills shall not be washed into yard drains, sidewalks, streets, etc.

F. The Contractor shall use a pan or pail to drain all product from the equipment. The Contractor shall not allow product to soak into the ground. In the event of a spill or leak the Contractor shall immediately (within 4 hours) notify the TxDOT Representative. In addition, within 24 hours of the spill submit typed documentation summarizing the incident to the TxDOT Representative.

G. In case of fire, the Contractor shall immediately notify the TxDOT personnel and the following general procedures consistent with NFPA shall be used (the Contractor shall evaluate the specific situation before acting):
   1. Contact the Fire Department.
   2. Shut off flow of product that may be entering the area.
   3. Attempt to extinguish fire or keep it from spreading to adjacent areas. If the fire is out of control, clear the area to avoid risk of injury.
   4. Use a dry chemical fire extinguisher (B:C type).

H. The Contractor shall maintain written documentation of compliance with all of the above requirements.

3.5 CALIBRATION AND DISPENSERS

A. All dispensers shall be checked for calibration by the Contractor after work has been completed but prior to acceptance of the work by the Owner. Any adjustments, modifications, repairs, etc., (i.e. the replacement of meters, pump impellers, etc.) Required to the dispenser or fuel system to achieve the required flow plus six cubic inches per five gallons shall be done at no additional cost to the Owner. Include results of calibration tests and a copy of the certificate of registration for the service person that performed the calibration and adjustments in the Operations and Maintenance Manuals.

3.6 SYSTEM DEMONSTRATION

A. Contractor shall demonstrate to Owner and/or Owner’s Representative all functions and alarms.

3.7 WARRANTY

A. Tank Manufacturer shall furnish a 30-year warranty to the Owner. Warranty shall be against defects in material and workmanship and shall include repair or replacement at no cost to the Owner.

END OF SECTION

SECTION 12493
HORIZONTAL LOUVER BLINDS

PART 1 - GENERAL

1.1 SUMMARY

A. Section includes horizontal metal slat louver blinds and operating hardware.

B. Related Sections:
   1. Section 06114 - Wood Blocking and Curbing: Blocking for attachment of headrail brackets.

1.2 SUBMITTALS

A. Section 01330 - Submittal Procedures: Submittal requirements.

B. Shop Drawings: Indicate opening sizes, tolerances required, method of attachment, clearances, and operation.

C. Product Data: Submit data indicating physical and dimensional characteristics, operating features, and full range of Manufacturers for initial color selection.

D. Samples: Submit one sample, long illustrating slat materials and finish, color, wand type and color.

E. Manufacturer's Installation Instructions: Submit special procedures and perimeter conditions requiring special attention.

1.3 QUALITY ASSURANCE

A. Source Limitations: Obtain horizontal louver blinds through one source from a single Manufacturer.

B. Fire-Test-Response Characteristics: Provide horizontal louver blinds with the fire-test-response characteristics indicated, as determined by testing identical products per test method indicated below by UL or another testing and inspecting agency acceptable to authorities having jurisdiction. Identify materials with appropriate markings of applicable testing and inspecting agency.
   1. Flame-Resistance Ratings: Passes NFPA 701.

C. Product Standard: Provide horizontal louver blinds complying with WCSC A 100.1.

D. Manufacturer: Company specializing in manufacturing products specified in this section with minimum three years documented experience.

1.4 MOCKUP

A. Section 01400 - Quality Requirements: Mockup requirements.

B. Construct mockup of one full size window.

C. Locate where directed by Architect/Engineer.

D. Incorporate accepted mockup as part of Work.

1.5 FIELD MEASUREMENTS

A. Verify field measurements prior to fabrication.

1.6 COORDINATION

A. Section 01300 - Administrative Requirements: Coordination and project conditions.

B. Coordinate the Work with window installation and placement of concealed blocking to support blinds.

1.7 EXTRA MATERIALS

A. Section 01700 - Execution Requirements: Spare parts and maintenance products.

B. Supply ten additional slats.

C. Supply two additional complete blind assemblies.

D. Supply 3 extra lift cords and control wands.

PART 2 - PRODUCTS

2.1 HORIZONTAL LOUVER BLINDS

A. Manufacturers:
1. Bali Window Treatments
2. Hunter Douglas Window Fashions
3. Levolor Contract
4. Substitutions: Section 01600 - Product Requirements

2.2 COMPONENTS

A. Blinds: Horizontal slat louvers hung from full-width headrail with full-width bottom rail; manual control of raising and lowering by cord with full range locking; blade angle adjustable by control wand.

B. Metal Slats: Spring tempered pre-finished aluminum; square slat corners, with manufacturing burrs removed:
   1. Width: 1 inch
   2. Thickness: 0.011 inch
   3. Color: As selected from Manufacturers full range

C. Slat Support: Woven polypropylene cord, ladder configuration.

D. Headrail: Pre-finished, formed aluminum box, with end caps; internally fitted with hardware, pulleys, and bearings for operation; same depth as width of slats.
   1. Color: As selected from Manufacturers full range.

E. Bottom Rail: Pre-finished, formed aluminum with top side shaped to match slat curvature; with end caps.
   1. Color: Same as Headrail.

F. Lift Cord: Braided nylon; continuous loop.
   1. Free end weighted
   2. Color: As selected from Manufacturers full range.

G. Control Wand: Extruded solid plastic; round shape.
   1. Removable type.
   2. Length of window opening height
   3. Color: As selected from Manufacturers full range.

H. Headrail Attachment Mounting: Ceiling mounting to head in window openings, permitting easy removal and replacement without damaging blind or adjacent surfaces and finishes; with spacers and shims required for blind placement and alignment indicated.
   1. Provide intermediate support brackets if end support spacing exceeds spacing recommended by Manufacturer for weight and size of blind.

I. Accessory Hardware: Type recommended by blind Manufacturer.

J. Colors, Textures, Patterns, and Gloss: As selected by Architect from Manufacturer's full range.

2.3 FABRICATION

A. Fabricate blinds to fit within openings with uniform edge clearance of ½ inch.

B. Concealed Components: Noncorrodible or corrosion-resistant-coated materials.
   1. Lift-and-Tilt Mechanisms: With permanently lubricated moving parts.

C. Unit Sizes: Obtain units fabricated in sizes to fill window and other openings as follows, measured at 74 deg F:
   1. Blind Units Installed between (inside) Jambs: Width equal to 1/4 inch per side or 1/2 inch total, plus or minus 1/8 inch, less than jamb-to-jamb dimension of opening in which each blind is installed. Length equal to 1/4 inch, plus or minus

1/8 inch, less than head-to-sill dimension of opening in which each blind is installed.

D. Installation Brackets: Designed for easy removal and reinstallation of blind, for supporting headrail, valance, and operating hardware, and for hardware position and blind mounting method indicated.

E. Installation Fasteners: No fewer than two fasteners per bracket, fabricated from metal noncorrosive to blind hardware and adjoining construction; type designed for securing to supporting substrate; and supporting blinds and accessories under conditions of normal use.

F. Color-Coated Finish:
1. Metal: For components exposed to view, apply Manufacturer's standard baked finish complying with Manufacturer's written instructions for surface preparation including pretreatment, application, baking, and minimum dry film thickness.

G. Component Color: Provide rails, cords, ladders, and exposed-to-view metal and plastic matching or coordinating with slat color, unless otherwise indicated.

PART 3 - EXECUTION

3.1 EXAMINATION

A. Section 01300 - Administrative Requirements: Coordination and project conditions.

B. Verify openings are ready to receive work.

C. Verify structural blocking and supports are correctly placed.

3.2 INSTALLATION

A. Provide blind at each window.

B. Install blinds. Install horizontal louver blinds level and plumb and aligned with adjacent units according to Manufacturer's written instructions, and located so exterior slat edges in any position are not closer than 1 inch to interior face of glass. Install intermediate support as required to prevent deflection in headrail. Allow clearances between adjacent blinds and for operating glazed opening's operation hardware if any.

C. Head Mounted: Install headrail to inside of head of window opening.

D. Secure in place with flush countersunk fasteners.

E. Place intermediate head supports at Manufacturers recommendation.

3.3 ERECTION TOLERANCES

A. Section 01400 - Quality Requirements: Tolerances.

B. Maximum Variation of Gap at Window Opening Perimeter: 1/4 inch.

C. Maximum Offset From Level: 1/8 inch.

3.4 ADJUSTING

A. Section 01700 - Execution Requirements: Testing, adjusting, and balancing.

B. Adjust blinds for smooth operation.

3.5 CLEANING

A. Section 01700 - Execution Requirements: Final cleaning.

B. Clean blind surfaces just prior to occupancy. Clean horizontal louver blind surfaces after installation, according to Manufacturer's written instructions.

C. Provide final protection and maintain conditions, in a manner acceptable to Manufacturer and Installer that ensure that horizontal louver blinds are without damage or deterioration at time of Substantial Completion.

D. Replace damaged horizontal louver blinds that cannot be repaired, in a manner approved by Architect, before time of Substantial Completion.

END OF SECTION

SECTION 13120
PRE-ENGINEERED BUILDINGS

PART 1 - GENERAL

1.1 SCOPE: The extent of Pre-engineered Buildings is shown on the drawings, including:

A. Pre-engineered, shop fabricated structural steel building frame.

B. Metal wall and sloped roof systems including linear panels, flashing soffits, gutters and downspouts, canopies. Rakes, ridge cap, doors, insulation and accessories...

C. Primary and Secondary framing system.

1.2 RELATED WORK SPECIFIED ELSEWHERE

A.	Cast-in-Place Concrete	Section 03300
B.	Doors and Windows (if applicable)	Sections 08100, 8330, 08710
C.	Sheet Metal Roof Panels	Section 07613
D.	Mechanical Systems	Division 15
E.	Electrical Systems	Division 16

1.3 SYSTEM DESCRIPTION

A. Rigid frame with straight columns and roof beams and gable roof.

B. Bay Spacing: Dimension between main frames measured normal to frame (at centerline of frame) for interior bays, and dimension from centerline of first interior main frame measured normal to end wall (outside face of end-wall girt) for end bays per plans.

C. Primary Framing: Rigid frame of rafter beams and columns, canopy beams, intermediate columns, end wall columns, and wind bracing.

D. Secondary Framing: Purlins, girts, eave struts, sill supports, clips and other items detailed.

E. Wall System: Preformed metal panels of vertical profile, with sub-girt framing/anchorage assembly, and accessory components.

F. Roof System: Preformed metal panels of upslope standing seam profile, with sub-girt framing/anchorage assembly, insulation and accessory components.

G. Roof Slope: per plans

H. Anchor bolts as specified by the building Manufacturer.

1.4 DESIGN REQUIREMENTS

A. Building construction shall meet the specific performance criteria specified herein and in the drawings.

B. Design members to withstand dead load, applicable snow load, and design loads due to pressure and suction of wind calculated in accordance with International Building Code (IBC), 2006, design load schedule and loads imposed by industrial equipment and mechanical, electrical systems.

C. Structural Framing: Design primary and secondary structural members and exterior covering materials for applicable load combinations in accordance with the Metal Building Manufacturer's Association's (MBMA) "Design Practices Manual". Primary structural frames shall be designed as pinned - based frames. Lateral drift of primary frames shall be limited to the eave height (in inches) / 360.

D. Structural Steel: For the design of structural steel members, comply with the requirements of the American Institute of Steel Construction (AISC) "Specifications for the Design, Fabrication and Erection of Structural Steel for Buildings" for design requirements and allowable stresses. Total load deflections shall be limited to L/240 vertical, L/360 lateral.

E. Light Gage Steel: For the design of light gage steel members, comply with the requirements of the American Iron and Steel Institute's (AISI) "Specification for the Design of Cold Formed steel Structural Members" and "Design of Light Gage Steel Diaphragms" for design requirements and allowable stresses. Total load deflections shall be limited to L/240 vertical, L/360 lateral.

F. For welded connections, comply with the American Welding Society's (AWS) "Standard Code for Arc and Gas Welding in Building Construction" for welding procedures.

G. Tolerances: Fabrication shall conform to the fabrication tolerances published in the MBMA "Common Industry Practices".

H. Design Loads: Basic design loads, as well as collateral loads, are as specified.
   1. Basic design loads include, in addition to dead load, live load and wind load.
   2. Collateral loads include additional dead loads over and above the weight of the metal building system such as mechanical and electrical systems.
   3. Design each member to withstand stresses resulting from combinations of loads that produce the maximum allowable stresses in that member as prescribed in MBMA's "Design Practices Manual" Section 9 of Design Practices.

I. Design members to withstand UL 580 - Uplift Resistance, Uplift Class 90 as tested by the Building Manufacturer, or wind load per IBC, whichever is more stringent.

J. Exterior wall and roof system shall withstand imposed loads with maximum allowable deflection of span: L/240 vertical, L/360 lateral.

K. Provide drainage to exterior for water entering or condensation occurring within wall or roof system.

L. Permit movement of components without buckling, failure of joint seals, undue stress on fasteners or other detrimental effects, when subject to temperature range of 150 Degrees F (65.6 Degrees C).

M. Thermal Performance:
1. Thermal Resistance of Calculated Wall System: R Value of 19 at conditioned space
2. Thermal Resistance of Calculated Wall System: R Value of 10 at semi-heated space
3. Thermal Resistance of Calculated Roof System: R Value of 22 at conditioned space
4. Thermal Resistance of Calculated Roof System: R Value of 10 at semi-heated space

L. Acoustical Performance: Microlite "L": Formaldehyde-free thermal & acoustical wide blanket roll.

1.5 SUBMITTALS FOR REVIEW

A. Submittals: Procedures for submittals Section 01300

B. Product Data: Provide data on profiles, component dimensions, fasteners and structural properties. Test results from certified lab on each panel system... Performance test results for wind uplift resistance per UL 580, clip to panel strength per ASTM E 1592-95, air infiltration per ASTM E 283-84.

C. Shop Drawings: Indicate assembly dimensions, locations of structural members, connections, attachments, openings, cambers, loads, and all associated items; wall and roof system dimensions, wall and roof panel layout, general construction details, anchorages and method of anchorage, method or installation; framing anchor bolt settings, sizes, and locations from datum and foundations loads; indicate welded connections with AWS A2.0 welding symbols; indicate net weld length; all design loads. Provide drawings and calculations sealed and signed by a professional engineer licensed to practice in the State of Texas.

D. Samples for Initial Selection: For each type of building component with factory-applied color finish

E. Samples for Verification: For each type of exposed finish required, prepared on Samples of sizes indicated below, in size illustrating color and texture of finish; fasteners, sealants and closers.
1. Metal Roof and Wall Panels: Nominal 12 inches long by actual panel width. Include fasteners, closures, and other exposed panel accessories.
2. Flashing and Trim: Nominal 12 inches long. Include fasteners and other exposed accessories.
3. Vapor Retarders: Nominal 6-inch- square Samples.
4. Accessories: Nominal 12-inch- long Samples for each type of accessory

F. Metal Panel System Fabrication Certification: Submit a letter from the metal building Manufacturer certifying that the wall and roof panels have been produced in a factory environment (not job site roll formed) with fixed-base roll forming equipment.

G. Product Certificates: For each type of metal building system, signed by product Manufacturer.
   1. Letter of Design Certification: Signed and sealed by a qualified professional engineer. Include the following:
      a. Name and location of Project
      b. Order number
      c. Name of Manufacturer
      d. Name of Contractor
      e. Building dimensions including width, length, height, and roof slope
      f. Indicate compliance with AISC standards for hot-rolled steel and AISI standards for cold-rolled steel, including edition dates of each standard.
      g. Governing building code and year of edition
      h. Design Loads: Include dead load, roof live load, collateral loads, roof snow load, deflection, wind loads/speeds and exposure, seismic design category or effective peak velocity-related acceleration/peak acceleration, and auxiliary loads (cranes).
      i. Load Combinations: Indicate that loads were applied acting simultaneously with concentrated loads, according to governing building code.
      j. Building-Use Category: Indicate category of building use and its effect on load importance factors.

H. Welding certificates.

I. Erector Certificate: Signed by Manufacturer certifying that erector complies with requirements.

J. Manufacturer Certificate: Signed by Manufacturer certifying that products comply with requirements.

K. Qualification Data: For Erector and Manufacturer.

L. Material Test Reports: Signed by Manufacturers certifying that the following products comply with requirements:
   1. Structural steel including chemical and physical properties
   2. Bolts, nuts, and washers including mechanical properties and chemical analysis
   3. Tension-control, high-strength, bolt-nut-washer assemblies
   4. Shop primers
   5. Non-shrink grout

M. Surveys: Have registered surveyor confirm location of anchor bolts prior to placement of concrete.

N. Warranties: Special warranties specified in this Section.

1.6 SUBMITTALS FOR INFORMATION

A. Submittals: Procedures for submittals Section 01300.

B. Manufacturer's Instructions: Indicate preparation requirements, anchor bolt placement, structural loads on base plate anchors, and accessories.

C. Erection Drawings: Indicate members by label, assembly sequence, and temporary erection bracing.

1.7 SUBMITTALS FOR CLOSEOUT

A. Project Record Documents: Record actual locations of concealed components and utilities. Record any changes to Construction Documents during construction and provide original As-Built set to TxDOT Representative at end of project. Contractor is required to maintain As-Built set on site and when changes occur. Progress Payments will be based on maintaining current As-Built set on a monthly basis and will be checked by the TxDOT Representative.

B. Upon completion of erection submit written Certification prepared and signed by the design Professional Engineer, qualified herein, attesting to his/her field verification of the erection being in accordance with his/her shop drawings.

1.8 QUALITY ASSURANCE

A. Perform Work in accordance with AISC - Quality Certification Program Category MB. MBMA - Metal Building Systems Manual and MBMA - Low Rise Building Systems Manual. Maintain one copy on site.

B. Manufacturer Qualifications: Company specializing in manufacturing the Products specified in this section with minimum five years documented experience.

C. Erector Qualifications: Company specializing in performing the work of this Section with minimum of five years documented experience and approved by Manufacturer. Project Foreman must have specific training in proper installation of specified wall and roof systems with certification. Submit five references from five different architects or owners for systems that have been installed for at least two years and stating that the performance has been satisfactory.

D. Design structural components, develop shop drawings, and perform shop and site work under direct supervision of a Professional Structural Engineer Experienced in design of this work and licensed in the State of Texas.

E. Source Limitations: Obtain primary metal building system components, including structural framing and metal panel assemblies, through one source from a single Manufacturer.

F. Product Options: Drawings indicate size, profiles, and dimensional requirements of metal building system and are based on the specific system indicated. Refer to Division 1 Section "Product Requirements."

1. Do not modify intended aesthetic effects, as judged solely by Architect, except with Architect's approval. If modifications are proposed, submit comprehensive explanatory data to Architect for review.

G. Retain "Welding certificates" Paragraph in "Submittals" Article with first paragraph below. AWS states that welding qualifications remain in effect indefinitely unless welding personnel have not welded for more than six months or there is a specific reason to question their ability.

H. Welding: Qualify procedures and personnel according to AWS D1.1, "Structural Welding Code-Steel," and AWS D1.3, "Structural Welding Code-Sheet Steel."

I. Surface-Burning Characteristics: Provide field-insulated metal panels having thermal insulation and vapor-retarder-facing materials with the following surface-burning characteristics as determined by testing identical products per ASTM E 84 by UL or another testing and inspecting agency acceptable to authorities having jurisdiction:
1. Flame-Spread Index: 25 or less, unless otherwise indicated
2. Smoke-Developed Index: 450 or less, unless otherwise indicated

J. A Pre-Erection Conference: Conduct conference at Project site to comply with requirements in Division 1 Section "Project Management and Coordination." Review methods and procedures related to metal building systems including, but not limited to, the following:
1. Inspect and discuss condition of foundations and other preparatory work performed by other trades.
2. Review structural load limitations.
3. Review and finalize construction schedule and verify availability of materials, Erector's personnel, equipment, and facilities needed to make progress and avoid delays.
4. Review required testing, inspecting, and certifying procedures.
5. Review weather and forecasted weather conditions and procedures for unfavorable conditions.

K. Pre-installation Roof Assembly Conference: Conduct conference at Project site to comply with requirements in Division 1 Section "Project Management and Coordination." Review methods and procedures related to metal roof panel assemblies including, but not limited to, the following:
1. Examine purlin and rafter conditions for compliance with requirements, including flatness and attachment to structural members.
2. Review structural limitations of purlins and rafters during and after roofing.
3. Review flashings, special roof details, roof drainage, roof penetrations, equipment curbs, and condition of other construction that will affect metal roof panels.
4. Review temporary protection requirements for metal roof panel assembly during and after installation.
5. Review roof observation and repair procedures after metal roof panel installation.

1.9 DELIVERY, STORAGE AND HANDLING

A. Delivery and receipt of materials shall be in accordance with the MBMA "Common Industry Practices".

B. Deliver and store prefabricated components, sheets, panels and other manufactured items so they will not be damaged or deformed.

C. Stack materials on platforms or pallets, covered with tarpaulins or other suitable weather tight ventilated covering. Cover metal sheets or panels so that water accumulations will drain freely. Do not store sheets or panels in contact with other materials that might cause staining. Elevate one of stored metal sheets and panels so as to positively drain water and prevent "white" rust.

1.10 REGULATORY REQUIREMENTS

A. Conform to IBC, 2003 code for submission of design calculations, reviewed shop and erection drawings, and as required for acquiring permit.

B. Cooperate with regulatory agency or authority and provide data as required.

1.11 PRE-INSTALLATION MEETING

A. Section 01300 - Administrative Requirements: Pre-installation meeting.

B. Convene two weeks before starting work of this section.

1.12 WARRANTY

A. Provide a 20 (twenty) year No Dollar Limit warranty to include coverage for exterior pre-finished surfaces to cover pre-finished color coat against chipping, cracking or crazing, blistering, peeling, chalking or fading.

B. Provide a 20 (twenty) year warranty covering bare metal against rupture, structural failure and perforation due to normal atmospheric corrosion exposure.

C. Provide 20 (twenty) year No Dollar Limit coverage for weather tightness of building enclosure elements after installation.

PART 2 - PRODUCTS

2.1 MANUFACTURERS - BUILDING SYSTEM

A. Manufacturers:
1. Alliance Steel, Inc.
2. Butler Manufacturing Company
3. Ceco Building Systems; Division of Robertson-Ceco Corporation
4. Mesco Metal Buildings; Division of NCI Building Systems, LLP
5. Metallic Metal Building Company; Division of NCI Building Systems, LLP
6. Red Dot Building Systems

7. Other acceptable Manufacturers offering equivalent products must be submitted as a substitution to be considered for approval.

2.2 MATERIALS – FRAMING

A. W-Shapes: ASTM A 992/A 992M; ASTM A 572/A 572M, Grade 50 or 55.

B. Structural Tubing: ASTM A500, Grade B.

C. Channels, Angles, M-Shapes, and S-Shapes: ASTM A 36/A 36M; ASTM A 572/A 572M, Grade 50 or 55.

D. Plate and Bar: ASTM A 36/A 36M; ASTM A 572/A 572M, Grade 50 or 55; or ASTM A 529/A 529M, Grade 50 or 55.

E. Steel Pipe: ASTM A 53/A 53M, Type E or S, Grade B.

F. Cold-Formed Hollow Structural Sections: ASTM A 500, Grade B or C, structural tubing.

G. Structural-Steel Sheet: Hot-rolled, ASTM A 1011/A 1011M, Structural Steel (SS), Grades 30 through 55, or High-Strength Low Alloy Steel (HSLAS), Grades 45 through 70; or cold-rolled, ASTM A 1008/A 1008M, Structural Steel (SS), Grades 25 through 80, or High-Strength Low Alloy Steel (HSLAS), Grades 45 through 70.

H. Metallic-Coated Steel Sheet: ASTM A 653/A 653M, Structural Steel (SS), Grades 33 through 80 or High-Strength Low Alloy Steel (HSLAS), Grades 50 through 80; with G60 coating designation; mill phosphatized.

I. Metallic-Coated Steel Sheet Prepainted with Coil Coating: Steel sheet metallic coated by the hot-dip process and prepainted by the coil-coating process to comply with ASTM A 755/A 755M.
   1. Zinc-Coated (Galvanized) Steel Sheet: ASTM A 653/A 653M, Structural Steel (SS), Grades 33 through 80 (230 through 550) or High-Strength Low Alloy Steel (HSLAS), Grades 50 through 80 (340 through 550); with G90 (Z275) coating designation.
   2. Aluminum-Zinc Alloy-Coated Steel Sheet: ASTM A 792/A 792M, Structural Steel (SS), Grade 50 or 80; with Class AZ50 coating.

J. Non-High-Strength Bolts, Nuts, and Washers: ASTM A 307, Grade A, carbon-steel, hex-head bolts; ASTM A 563 carbon-steel hex nuts; and ASTM F 844 plain (flat) steel washers.
   1. Finish: Plain

K. High-Strength Bolts, Nuts, and Washers: ASTM A 325, Type 1, heavy hex steel structural bolts; ASTM A 563 heavy hex carbon-steel nuts; and ASTM F 436 hardened carbon-steel washers.
   1. Finish: Plain

L. Tension-Control, High-Strength Bolt-Nut-Washer Assemblies: ASTM F 1852, Type 1, heavy-hex-head steel structural bolts with splined ends.

1. Finish: Plain

M. Unheaded Anchor Rods: ASTM A 36/A 36M.
1. Configuration: Straight
2. Nuts: ASTM A 563 heavy hex carbon steel
3. Plate Washers: ASTM A 36/A 36M carbon steel
4. Washers: ASTM F 436 hardened carbon steel
5. Finish: Plain
6. Nuts: ASTM A 563 heavy hex carbon steel
7. Plate Washers: ASTM A 36/A 36M carbon steel
8. Washers: ASTM F 436 hardened carbon steel
9. Finish: Plain

N. Threaded Rods: ASTM A 36/A 36M.
1. Nuts: ASTM A 563 heavy hex carbon steel
2. Washers: ASTM A 36/A 36M carbon steel
3. Finish: Plain

O. Cold Forming Members: ASTM 607 Grade 50 Zinc Coated Steel STM 446-G90.

P. Welding Materials: AWS D1.1; type required for materials being welded.

Q. Primer: SSPC 20, Red oxide.

R. Grout: ASTM C1107, Non-shrink type, premixed compound consisting of non-metallic aggregate, cement, water reducing and plasticizing agents, capable of developing minimum compressive strength of 2400 psi (17 MPa) in two days and 7000 psi (48 MPa) in 28 days.

2.3 DESIGN LOADS

A. Roof Live Loads (Applies to the horizontal projection):
1. 20 PSF: 0-200 SF tributary area
2. 16 PSF: 200-600 SF tributary area
3. 12 PSF: Over 600 SF tributary area

B. Roof Covering: 50 Psf or a 200 pound concentrated load located at center of maximum roof panel span.

C. Auxiliary Loads:
1. Concentrated Loads: See mechanical and electrical, carefully coordinate and accommodate all items.
2. Provide support beams in addition to the roof purlins to support loads greater than 500 pounds.
3. Reference Structural, Mechanical, and Architectural documents for additional concentrated loads. Coordinate and accommodate additional loads imposed on structural by attached items.

2.4 DESIGN OF PRIMARY FRAMING

A. In the design of primary framing members, wind pressures shall be calculated in accordance with IBC, Wind Speed requirements Primary frames shall be designed with pinned bases.

2.5 BASIC DESIGN WIND PRESSURE (Wall Components, girts and wall panels):

A. Wind Speed: per IBC wind load requirements and per code for the project location, Texas.

B. Wind pressures on parts and portions shall be calculated in accordance with the MBMA "Design and practices Manual".

2.6 DESIGN LOAD COMBINATIONS

A. Dead/Live/Wind: Loading combinations of dead load, live load and wind loads shall be in accordance with MBMA recommendations, Section 9 of Design Practices.

2.7 MATERIALS - WALL / SOFFIT AND ROOF SYSTEM

A. Sheet Metal Roof / Wall and Soffit Panels as specified in section 07413.

B. Insulation: In accordance with design requirement section.

C. Restrain insulation with galvanized poultry net at roof.

D. Joint Seal Gaskets: Manufacturer's standard EPDM type.

2.8 METAL DOORS AND FRAMES

A. Doors: Specified in Section 08110.

B. Frames: Specified in Section 08115.

2.9 COILING DOORS

A. Overhead Coiling Doors: Specified in Section 08333.
   1. Overhead Door Frame: Formed steel sections braced to building frame.

2.10 METAL BUILDING CURBS - See Roof Plan & Details

A. Refer to Section 07614 Metal Roof Curbs.

2.11 FABRICATION - FRAMING

A. Fabricate members in accordance with AISC Specification for plate, bar, tube or rolled shapes.

B. Anchor Bolts: Formed with bent or straight shank, assembled with template for casting into concrete.

C. Provide framing for doors, windows, ventilators, and louver openings.

2.12 FRAMING MEMBER THICKNESS (MINIMUMS)

A. Cold-Formed Primary Framing Members: 14 gage.

B. Cold-Formed Secondary Framing Members: 16 gage.

C. Intermediate Pipe Columns: 3/16".

D. Webs of Welded Built-up Members: 1/8".

E. Flanges of Welded Built-Up Members: 3/16".

F. Bracing Rods: 1/2 " diameter.

2.13 TYPICAL FRAMING COMPONENTS

A. Rigid Frames, Wind Unit Frames and Canopy Beams:
1. Fabricate rigid frames from hot-rolled structural steel. Provide built-up "I-Beam" shape rigid frames consisting of parallel flanged beams. Provide frames factory welded and shop painted. Furnish frames complete with attachment plates, bearing plates and splice members. Factory drill frames for bolted field assembly.
2. Provide length of span and spacing of frames as indicated. Slight variations in length of span and frame spacing may be acceptable if necessary to meet Manufacturer's standard.

B. Bearing End Frames: Consist of columns at the building corners and a continuous rafter beam supported by the end wall columns.

C. End wall Columns: 8 inch min. deep cold-formed "C" sections or welded built-up "I" shapes.

D. Purlins and Girts: Roll-Formed "Z" sections or open web joists, depth as required.

E. Eave Struts: "C" sections formed so as to provide adequate backup for both roof and wall panels at the building eaves.

F. Wind Bracing (When required)
1. Method: Diagonal rod bracing in both roof and sidewalls as required by calculations.
2. Reinforcing: Double roof purlins, inter-connected by diaphragms, in between the rigid frames at all points of attachment of diagonal roof bracing.
3. Provide temporary bracing during erection of structure.

G. Wind Bracing Omission: Permissible where the diaphragm strength of the roof covering is adequate to resist the longitudinal wind forces. Diaphragm action shall not be assumed for standing seam roof system.

H. Flange Bracing: Inside flange of all rigid frames shall be braced laterally by angles connected to the flange and web of the frame and to the web of the purlin or girt so that the allowable compressive stress is adequate for any combination of loading.

I. Base Support: A continuous member shall be provided to which the base of the wall covering may be attached. This member shall be:
   1. A continuous 18 gage; 1.25 ounce coating class, galvanized, box-shaped member cast integrally with concrete foundation or 3 x 3 x 1/4" (76 x 76 x 6.4 mm) steel angle anchored to slab with 3/8 inch (9.5 mm) bolt and expand shield at 48 inch (1.22 m) centers; zinc coated 1.80 coating class.

J. Framed Openings: Structural framing members for all openings shall be adequate for the specified design loads. Framing members who are exposed to weather shall be galvanized steel.

K. Bolts: ASTM A325 bolts tightened by the calibrated wrench method shall have a hardened washer under the element (nut and bolt head) turned in tightening.

2.14 FABRICATION - WALL AND ROOF SYSTEMS

A. Expansion Joints: Same material and finish as adjacent material where exposed, (.0359) inch (.91mm) thick, Manufacturer's standard brake formed Infill type, of profile to suit system.

B. Flashings, Closure Pieces, Fascia, Infills, Caps, and accessories: Same material and finish as adjacent material, profile to suit system or formed as detailed, 24 gauge minimum.

C. Ventilator: Specification Division 15000 Mechanical and 16000 Electrical.

D. Wall Louvers: See specifications section 15 and Mechanical drawings

E. Roof Curbs, Pipe Flashing:
   1. Roof Curbs: Section 07614 Prefabricated Metal Building Roof Curbs
   2. Pipe Flashing: E.P.D.M. rubber or Dupont "Nordel"; sized to fit pipes

F. Batt Insulation: Refer Section 07213 Batt Insulation.

2.15 WEATHER-SEAL SCREWS

A. Type: No. 12-14 self-drilling or self-tapping.

B. Screw Shank: Carbon steel, plated with 0.0003" zinc or cadmium.

C. Washers: Recessed into head; neoprene, EPDM, PVC.

D. Head: 3/8" (9.5 mm) hex drive.

E. Head Cap: Zamak alloy or stainless steel.

F. Paint Finish:
1. Required, except, on unpainted panels
2. Color to match panels
3. Paint durability to match panels

2.16 SEALER

A. Locations: Sidelaps, endlaps and flashing. In addition, seal to abutting construction to make a water and airtight seal.

B. Material:
1. General Description: Fiber-filled, pressure sensitive tape, non-asphaltic, non-shrinking, non-drying, and non-toxic and shall have superior adhesion metals, plastics and painted surfaces at temperatures from 30 Degrees to +160 Degrees F. The material shall have a flashpoint of at least 300 Degrees F, and shall not flow at 200 Degrees F.
2. Minimum Specification: Equal to Gov. Spec. No. MIL-C-18969, Type II, Class B.
3. Size: 1/2" x 3/32" or 1" x 1/8".

2.17 FLASHING AND TRIM

A. Locations: At the rake, corners and eaves; at framed openings and whenever necessary to provide weather tightness and finished appearance.

B. Ridge Panel: Formed to match the slope and profile or adjoining panels. Provide continuous ridge vent.

C. Material, Finish: Match painted wall panels.

2.18 CLOSURES (PROFILE)

A. Solid or closed cell, preformed Ethylene-Propylene-Diene-Monomer (EPDM) or Ethylene Propylene Terpolymer (EPT) color gray, matching the profile of the panel.
1. Closures: Provide closures at eaves and rakes, fabricated of same material as metal wall panels.
2. Closure Strips: Closed-cell, expanded, cellular, rubber or crosslinked, polyolefin-foam or closed-cell laminated polyethylene; minimum 1-inch- thick, flexible closure strips; cut or premolded to match metal wall panel profile. Provide closure strips where indicated or necessary to ensure weather tight construction.

2.19 FABRICATION GUTTERS AND DOWNSPOUTS

A. Fabricate of same material and finish as roofing metal.

B. Form gutters and downspouts of profile and size to collect and remove water. Fabricate with connection pieces.

C. Form sections in maximum possible lengths. Hem exposed edges. Allow for expansion at joints not to exceed 50 feet (15 m) spacing.

D. Fabricate support straps of same material and finish as roofing metal, color as selected.

2.20 FINISHES

A. Primarily Framing Members: Clean, prepare and shop prime to SSPC Manual requirements. Do not prime surfaces to be field welded.

B. Exterior Surfaces of Wall and Roof Components and Accessories: Precoated enamel on steel of fluorocarbon Kynar 500 finish, color as selected by architect.

C. Interior Surfaces of Wall Under Panel Components and Accessories: Precoated enamel on steel of fluorocarbon Kynar 500 finish, white color.

PART 3 - EXECUTION

3.1 EXAMINATION

A. Verify that foundation, floor slab, mechanical and electrical utilities, and placed anchors are in correct position.

3.2 ERECTION

A. Erect metal building system according to Manufacturer's written erection instructions and erection drawings.

B. Erect framing in accordance with AISC Specification.

C. Provide for erection and wind loads. Provide temporary bracing to maintain structure plumb and in alignment until completion of erection and installation of permanent bracing. Locate braced bays as indicated.

D. Base and Bearing Plates: Clean concrete- and masonry-bearing surfaces of bond-reducing materials, and roughen surfaces prior to setting plates. Clean bottom surface of plates.
   1. Set plates for structural members on wedges, shims, or setting nuts as required.
   2. Tighten anchor rods after supported members have been positioned and plumbed. Do not remove wedges or shims but, if protruding, cut off flush with edge of plate before packing with grout.
   3. Promptly pack grout solidly between bearing surfaces and plates so no voids remain. Neatly finish exposed surfaces; protect grout and allow to cure. Comply with Manufacturer's written installation instructions for shrinkage-resistant grouts.

E. Do not field cut or alter structural members without approval.

F. After erection, prime welds, abrasions, and surfaces not shop primed.

3.3 ERECTION - PURLINS AND GIRTS

A. Provide rake or gable purlins with tight fitting closure channels and fascias.

B. Locate and space wall girts to suit door and window arrangements and heights.

C. Secure purlins and girts to structural framing and hold rigidly to a straight line by sag rods.

D. Purlins under steel roof decking to receive single ply roofing shall be spaced a maximum of 5 feet on centers or as shown on drawings.

3.4 ERECTION - BRACING

A. Provide diagonal rod or angle bracing in both roof and sidewalls as required.

B. Movement resisting frames may be used in lieu of sidewall rod bracing, to suit Manufacturer's standards.

C. Where diaphragm strength of roof coverage is adequate to resist wind forces, rod or other forms of bracing may be omitted.

3.5 ERECTION - FRAMED OPENINGS

A. Provide steel angles and bent plates to reinforce openings and to carry loads and vibrations imposed, including equipment furnished under mechanical and electrical work. Securely attach to building structural frame.

B. Provide 2 x 2 x 1/4 inch (50.8 x 50.8 x 6.4 mm) steel angles for openings 6 to 18 inches (152 to 457 mm) in size. Openings over 18 inches (457 mm) in size shall be reinforced with 4 x 4 x 1/4 inch (102 x 102 x 6.4 mm) steel angles in accordance with Section 05210. At roof curbs, where indicated, reinforce openings with 6 x 6 x 1/4 inch (152 x 152 x 6.4 mm) steel angles and 1/4 inch (6.4 mm) bent plates.

3.6 ERECTION - WALL AND ROOFING SYSTEM

A. Install in accordance with Manufacturer's instructions. Examination: Examine primary and secondary framing to verify that structural panel support members and anchorages have been installed within alignment tolerances required by Manufacturer.

1. Examine roughing-in for components and systems penetrating metal panels to verify actual locations of penetrations relative to seam locations of metal panels before metal panel installation.

B. Exercise care when cutting pre-finished material to ensure cuttings do not remain on finish surface.

C. Fasten cladding system to structural supports, aligned level and plumb.

D. Locate end laps over supports. End laps minimum 6 inches (152 mm). Place side laps over bearing.

E. Provide expansion joints in accordance with Manufacturers' recommendation.

F. Use concealed fasteners at roof.

G. Use exposed fasteners at walls.

H. Install insulation and vapor retarder utilizing squeeze for attachment. Place wire mesh under vapor retarder for support between framing members.

I. Roof Panels: General: Provide metal roof panels of full length from eave to ridge, unless otherwise indicated or restricted by shipping limitations.

1. Field-Assembled, Standing-Seam Metal Roof Panels: Fasten metal roof panels to supports with concealed clips at each standing-seam joint at location, spacing, and with fasteners recommended by Manufacturer.
    a. Install ridge caps as metal roof panel work proceeds.
    b. Flash and seal metal roof panels with weather closures at eaves and rakes. Fasten with self-tapping screws.
    c. Install clips to supports with self-tapping fasteners.
    d. Install pressure plates at locations indicated in Manufacturer's written installation instructions.
    e. Retain subparagraph above or first subparagraph below; coordinate with products selected in Part 2.
    f. Seamed Joint: Crimp standing seams with Manufacturer-approved motorized seamer tool so clip, metal roof panel, and factory-applied sealant are completely engaged.
    g. Rigidly fasten eave end of metal roof panels and allow ridge end free movement due to thermal expansion and contraction. Predrill panels for fasteners.
    h. Provide metal closures at peaks, rake edges, rake walls, and each side of ridge caps.

J. Sidewall Panels: Continuous from eave line to below the column base plated. Lap-Seam Metal Panels: Install screw fasteners with power tools having controlled torque adjusted to compress neoprene washer tightly without damage to washer, screw threads, or metal panels. Install screws in predrilled holes.

1. Arrange and nest side-lap joints so prevailing winds blow over, not into, lapped joints. Lap ribbed or fluted sheets one full rib corrugation. Apply metal panels and associated items for neat and weathertight enclosure. Avoid "panel creep" or application not true to line.

K. End wall Panels: All end wall panels shall be continuous to the roof line except where panel lengths are exceeded. Where panel lengths are exceeded, end wall panels shall be continuous to the eave line with panels above the eave line continuous to the roof line. Panels spliced at the eave line shall be square cut. Panels continuous to roof line shall be bevel cut to correspond to the roof slope. All end laps for end wall panels where required shall be a minimum of 4 inches and shall occur at a wall girt.

L. Roof Laps: Before securing, roof panels shall be sealed with a continuous ribbon of tape sealer, unless the optional anti-capillary groove is specified.

M. Roof Fastenings:
1. Roof panels shall be secured with concealed panel clips that are secured to secondary structure per Manufacturer's requirements.
2. Side laps of roof panels shall be mechanically.

N. Wall Fastenings:
1. Wall panels shall be secured to girts with minimum No. 14 sheet metal screws at a maximum spacing of 12 inches.
2. At the endlaps of rib sheets, the maximum spacing shall be 6 inches (152 mm).
3. At the endlaps of "Hi-Rib" panels the fasteners shall be attached each side of the major rib.
4. At the sidelaps of "A" panels No.10 sheet metal screws shall be placed a maximum of 18 inches (457) mm) on center.

O. Joint Sealers: Install gaskets, joint fillers, and sealants where indicated and where required for weatherproof performance of metal panel assemblies. Provide types of gaskets, fillers, and sealants indicated or, if not indicated, types recommended by metal panel Manufacturer.
1. Seal metal panel end laps with double beads of tape or sealant, full width of panel. Seal side joints where recommended by metal panel Manufacturer.
2. Prepare joints and apply sealants to comply with requirements in Division 7 Section "Joint Sealants."

P. Metal Protection: Where dissimilar metals will contact each other or corrosive substrates, protect against galvanic action by painting contact surfaces with bituminous coating, by applying rubberized-asphalt underlayment to each contact surface, or by other permanent separation as recommended by metal roof panel Manufacturer.

3.7 ERECTION - GUTTER AND DOWNSPOUT

A. Rigidly support and secure components. Joint lengths with formed seams sealed watertight. Flash and seal gutters to downspouts.

B. Apply bituminous paint on surfaces in contact with cementitious materials

C. Slope gutters minimum 1/8 inch/ft (3 mm/m).

D. Install Pre-cast concrete splash blocks 18 x 36 inch (457 x 914 mm) under each downspout.

3.8 INSTALLATION LINER PANELS

A. Inspection:
1. Check supporting members for correct layout and alignment.
2. Verify that surfaces to receive liner panels are free of debris.
3. Do not proceed with installation until defects are corrected.

B. Installation
1. Install liner panels and accessories in accordance with the Manufacturer's instructions.

2. Do not stretch or compress panel side-lap interlocks.
3. Secure panels without warp or deflection.

3.9 INSTALLATION - ACCESSORIES

A. Install door frame, door, exhaust fan, overhead door, accessories, window and glass, and louvers in accordance with Manufacturer's instructions.

B. Seal wall and roof accessories watertight and weather tight with sealant.

C. Batt Insulation- General: Install insulation concurrently with metal wall panel installation, in thickness indicated to cover entire wall, according to Manufacturer's written instructions.
   1. Set vapor-retarder-faced units with vapor retarder to warm side of construction, unless otherwise indicated. Do not obstruct ventilation spaces, except for firestopping.
   2. Tape joints and ruptures in vapor retarder, and seal each continuous area of insulation to surrounding construction to ensure airtight installation.
   3. Install factory-laminated, vapor-retarder-faced blankets straight and true in one-piece lengths with both sets of facing tabs sealed to provide a complete vapor retarder.
   4. Blanket Roof Insulation: Comply with the following installation method:
      a. Over-Framing Installation: Extend insulation and vapor retarder over and perpendicular to top flange of secondary framing members. Hold in place by metal roof panels fastened to secondary framing.
      b. Retainer Strips: Install retainer strips at each longitudinal insulation joint, straight and taut, nesting with secondary framing to hold insulation in place.
   5. Blanket Wall Insulation: Extend insulation and vapor retarder over and perpendicular to top flange of secondary framing members. Hold in place by metal wall panels fastened to secondary framing.
      a. Retainer Strips: Install retainer strips at each longitudinal insulation joint, straight and taut, nesting with secondary framing to hold insulation in place.

3.10 TOLERANCES

A. Framing Members: 1/4 inch (6 mm) from level; 1/8 inch (3 mm) from plumb

B. Siding and Roofing: 1/8 inch (3 mm) from true position.

3.11 FIELD QUALITY CONTROL

A. Testing Agency: Contractor will engage a qualified testing and inspecting agency to perform the following tests and inspections and to submit reports.

B. Tests and Inspections:
   1. High-Strength, Field-Bolted Connections: Connections shall be tested at the Owners discretion and inspected during installation according to RCSC's "Specification for Structural Joints Using ASTM A 325 or A 490 Bolts."

2. Welded Connections: In addition to visual inspection, field-welded connections shall be tested at the Owners discretion and inspected according to AWS D1.1 and the following inspection procedures, at inspector's option:
   a. Liquid Penetrant Inspection: ASTM E 165
   b. Magnetic Particle Inspection: ASTM E 709; performed on root pass and on finished weld. Cracks or zones of incomplete fusion or penetration will not be accepted.
   c. Ultrasonic Inspection: ASTM E 164
   d. Radiographic Inspection: ASTM E 94

C. Correct deficiencies in Work that test reports and inspections indicate do not comply with the Contract Documents.
   1. Contractor / Installer shall bare costs of re-inspections at work that did not comply.

3.12 CLEANING AND PROTECTION

A. Repair damaged galvanized coatings on galvanized items with galvanized repair paint according to ASTM A 780 and Manufacturer's written instructions.

B. Touchup Painting: After erection, promptly clean, prepare, and prime or reprime field connections, rust spots, and abraded surfaces of prime-painted structural framing, bearing plates, and accessories.
   1. Clean and prepare surfaces by SSPC-SP 2, "Hand Tool Cleaning," or SSPC-SP 3, "Power Tool Cleaning."
   2. Apply a compatible primer of same type as shop primer used on adjacent surfaces.

C. Metal Panels: Remove temporary protective coverings and strippable films, if any, as metal panels are installed. On completion of metal panel installation, clean finished surfaces as recommended by metal panel Manufacturer. Maintain in a clean condition during construction.
   1. Replace metal panels that have been damaged or have deteriorated beyond successful repair by finish touchup or similar minor repair procedures.

D. Louvers: Clean exposed surfaces that are not protected by temporary covering, to remove fingerprints and soil during construction period. Do not let soil accumulate until final cleaning.
   1. Restore louvers damaged during installation and construction period so no evidence remains of corrective work. If results of restoration are unsuccessful, as determined by Architect, remove damaged units and replace with new units.
      a. Touch up minor abrasions in finishes with air-dried coating that matches color and gloss of, and is compatible with, factory-applied finish coating.

END OF SECTION

SECTION 15050

BASIC MECHANICAL REQUIREMENTS

PART 1 - GENERAL

1.1 SECTION INCLUDES

A. Basic Mechanical Requirements specifically applicable to all Division 15 specifications.

1.2 REFERENCES, STANDARDS, AND REGULATORY REQUIREMENTS: The following state and local codes, ordinances, and industry standards shall be complied with on this project as applicable:

A. The "Authority Having Jurisdiction" for this project is the Owner, Texas Department of Transportation, as an Agency of the State of Texas. As such, it is required that the installation shall meet the minimum standards prescribed in the latest editions of the following listed codes and standards, which are made a part of these Specifications.

B. American National Standards Institute (ANSI): All current editions of applicable manuals and standards.

C. American Society of Mechanical Engineers (ASME): Boiler and Pressure Vessel Codes

D. Air Conditioning and Refrigeration Institute Standards (ARI): All standards related to refrigeration and air conditioning equipment and piping furnished under these Specifications.

E. Sheet Metal and Air Conditioning Contractors National Association, Inc. (SMACNA): All current editions of applicable manuals and standards.

F. Air Moving and Conditioning Association (AMCA): All current editions of applicable manuals and standards.

G. American Gas Association Publications (AGA): Directory of Approved Gas Appliances and Tested Accessories

H. American Society of Testing Materials (ASTM): All current editions of applicable manuals and standards.

I. National Fire Protection Association Standards (NFPA):
1. NFPA No. 54, Gas Appliances, Piping, National Fuel Gas Code
2. NFPA No. 70, National Electrical Code
3. NFPA No. 72A, Local Protective Signaling Systems
4. NFPA No. 72E, Automatic Fire Detectors
5. NFPA No. 90A, Air Conditioning Systems
6. NFPA No. 91, Blower & Exhaust Systems
7. NFPA No. 101, Life Safety Code
8. NFPA No. 211, Chimneys, Fireplaces and Vent Systems

9. NFPA No. 241, Standard for Safeguarding Construction, Alteration and Demolition Operations
10. NFPA No. 255, Method of Test of Surface Burning Characteristics of Building Materials
11. NFPA No. 258, Standard Research Test Method for Determining Smoke Generation of Solid Materials

J. National Electrical Manufacturers' Association (NEMA): All current editions of applicable manuals and standards.

K. Local Fire Department and the State Fire Marshall, as may be applicable to construction on this site.

L. National Sanitation Foundation (NSF): All current editions of applicable manuals and standards.

M. Occupational Safety and Health Act (OSHA): All applicable safety standards.

N. Texas Occupational Safety Act: All applicable safety standards.

O. International Building Code, latest edition.

P. Uniform Mechanical Code, latest edition.

Q. Uniform Plumbing Code, latest edition.

R. ASRAE 90.1 – State Energy Code, latest addition.

S. Refer to individual specification sections for additional Codes and Standards.

T. All materials and workmanship shall comply with all applicable state and national codes, specifications, and industry standards. In all cases where Underwriters' Laboratories, Inc. has established standards for a particular type material, such material shall comply with these standards. Evidence of compliance shall be the UL "label" or "listing" under re-examination service.

1.3 GENERAL MATERIALS AND EQUIPMENT REQUIREMENTS

A. Note that no asbestos-bearing, solvent based, or lead containing materials shall be used on this project. If any prohibited materials are installed, all of the material, including the underlying material, shall be removed and disposed of as required by local, state, and federal requirements.

B. The Contractor shall execute all work hereinafter specified or indicated on accompanying Drawings. Contractor shall provide all equipment necessary and usually furnished in connection with such work and systems whether or not mentioned specifically herein or on the Drawings.

C. The Contractor shall be responsible for fitting the material and apparatus specified in this division into the building and shall carefully lay out the specified work at the site to

conform with the structural conditions, to avoid all obstructions, to conform to the details of the installation and thereby to provide an integrated installation operating as a complete set of systems.

D. Verification of Dimensions: The Contractor shall be responsible for the coordination and proper relation of his work to the building structure and to the work of all trades. The Contractor shall visit the premises and become thoroughly familiarize with all details of the work and working conditions, to verify all dimensions in the field, and to advise the Design Engineer of any discrepancy before performing any work. Adjustments to the work required in order to facilitate a coordinated installation shall be made at no additional cost to the Owner or the Design Engineer.

E. The Mechanical, Plumbing, and associated Drawings are necessarily diagrammatic by their nature, and are not intended to show every connection in detail or every pipe or conduit in its exact location. These details are subject to the requirements of standards referenced elsewhere in these specifications, and structural and architectural conditions. The Contractor shall carefully investigate structural and finish conditions and shall coordinate the separate trades in order to avoid interference between the various phases of work. Work shall be organized and laid out so that it will be concealed in furred chases and suspended ceilings, etc., in finished portions of the building, unless specifically noted to be exposed. All work shall be installed parallel or perpendicular to the lines of the building unless noted otherwise.

F. When the Drawings do not give exact details as to the elevation of pipe, conduit and ducts, the Contractor shall physically arrange the systems to fit in the space available at the elevations intended with proper grades for the functioning of the system involved. Piping, exposed conduit and the duct systems are generally intended to be installed true and square to the building construction, and located as high as possible against the structure in a neat and workmanlike manner. The Drawings do not show all required offsets, control lines, pilot lines and other location details. Work shall be concealed in all finished areas.

G. Storage at Site: The Contractor shall not receive material or equipment at the job site until there is suitable space provided to properly protect equipment from rust, drip, humidity, and dust damage.

H. Capacities and capabilities of materials and equipment specified or scheduled for this project shall be not less than those indicated. In addition, the materials and equipment shall be such that no component or system becomes inoperative or is damaged because of startup or other overload conditions.

I. Conformance with Agency Requirements: Where materials or equipment are specified to be approved, listed, tested, or labeled by the Underwriters' Laboratories, Inc. (UL), or constructed and/or tested in accordance with the standards of the American Society of Mechanical Engineers (ASME) or the Air Moving and Conditioning Association (AMCA), the Contractor shall submit proof that the items furnished under this Section of the Specifications conform to such requirements. The label of the Underwriters Laboratories, Inc., applied to the item will be acceptable as sufficient evidence that the

items conform to such requirements. The ASME stamp and the AMCA label will be acceptable as sufficient evidence that the items conform to the respective requirements.

J. Nameplates: Each major component of equipment shall have the Manufacturer's name, address, and catalog number on a plate securely attached to the item of equipment. All data on nameplates shall be legible at the time of Final Inspection. Under no circumstances shall any nameplate be painted over for any reason. If a new or existing nameplate is painted over, the nameplate shall be restored to as new condition, or replaced with a new nameplate provided by the Manufacturer.

K. Protection from Moving Parts: Belts, pulleys, chains, gears, couplings, projecting setscrews, keys, and other rotating parts shall be fully enclosed or properly guarded for personnel protection.

1.4 DEFINITIONS (Note: These definitions are included here to clarify the direction and intention of this specification. The list given here is not by any means complete. For further clarification as required, Contractor shall contact the designated Owner's Representative.):

A. AND/OR: Where "and/or" is used in these Specifications or on the Drawings, it shall mean that situations exist where either one or both conditions occur or are required and shall not be interpreted to permit an option on the part of the Contractor.

B. APPROVE: Where used in conjunction with Architect's/Engineer's response to submittals, requests, applications, inquiries, reports and claims by Contractor, the meaning of term "approved" will be held to limitations to Architect's/Engineer's responsibilities and duties as specified in General and Supplementary Conditions. In no case will approval by Architect/Engineer be interpreted as a release of Contractor from responsibilities to fulfill requirements of contract documents or to extend Architect's/Engineer's responsibility into Contractor's area of construction supervision and job safety.

C. ARCHITECT (or DESIGN ARCHITECT): The "Architect" or "Design Architect" is defined as the architect whose seal appears on the construction specifications title page and on the drawings for the particular area under consideration.

D. AS REQUIRED: Where "as required" is used in these Specifications or on the drawings, it shall mean that situations exist that are not necessarily described in detail or indicated that may cause the Contractor certain complications in performing the work described or indicated. These complications entail the normal coordination activities expected of the Contractor where multiple trades are involved and new or existing construction causes deviations to otherwise simplistic approaches to the work to be performed. The term shall not be interpreted to permit an option on the part of the Contractor to achieve the end result.

E. AUTHORITY HAVING JURISDICTION: The Texas Department of Transportation, the Owner, as an agency of the State of Texas is the "Authority Having Jurisdiction" in any matter of code assignment, interpretation, etc., as applies to this project. In many cases, at the Owner's option, the Authority Having Jurisdiction may choose to apply the policies and procedures of an Authority not having jurisdiction, and as such, delegate its authority over some issues. In the event that some of its authority has been delegated to another Authority, such delegation will be specifically delineated in these specifications.

In many instances the sections of the specifications will include references which will indicate codes, standards, and regulations which have bearing on the project, and will be enforced by the Authority Having Jurisdiction. The Owner may, at its option and at any time, defer to a local jurisdiction as the Authority Having Jurisdiction. This action, if taken, shall not subrogate any of the authority of the Owner, nor have any bearing on other unrelated requirements of these specifications.

F. CONCEALED: "Concealed" areas are those areas which cannot be seen by the building occupants, such as inside walls or above ceilings.

G. DIRECTED, REQUESTED, etc.: Where not otherwise explained, terms such as "directed", "requested", "authorized", "selected", "approved", "required", "accepted", and "permitted" mean "directed by the Architect/Engineer," "requested by the Architect/Engineer" and similar phrases. However, no such implied meaning will be interpreted to extend the Architect's/Engineer's responsibility into Contractor's area of construction supervision and job safety.

H. ENGINEER (or DESIGN ENGINEER or ENGINEER OF RECORD): The "Engineer" or "Design Engineer" or "Engineer of Record" is defined as the engineer whose seal appears on the construction specifications title page and on the drawings for the particular area under consideration. Note that in some cases, the work of two or more Engineers may appear on the same drawing or document. In that case the area of responsibility of each Engineer will be noted in the area of each signed seal.

I. EXPOSED: "Exposed" areas are all areas which are exposed to view by the building occupants including under counters, inside cabinets and closets, plus all mechanical and electrical rooms.

J. FURNISH:
1. The term "furnish" is used to mean "supply and deliver to project site, ready for unloading, unpacking, assemble, installation, and similar operations."
2. Where "furnish" applies to work for which the installation is not otherwise specified "furnish" in such case shall mean "furnish and install."

K. INDICATED: The term "indicated" is a cross reference to graphic representations, notes or schedules on drawings, to other paragraphs or schedules in the specifications, and to similar means of communicating the requirements of the contract documents. Where terms such as "shown", "noted", "scheduled", and "specified" are used in lieu of "indicated", it is for the purpose of helping the reader locate the cross reference, and no limitation of location is intended except as specifically noted.

L. INSTALL: The term "install" is used to describe operations at project site including unloading, unpacking, assembly, erection, placing, anchoring, applying, working to dimension, finishing, curing, protecting, cleaning and similar operations.

M. OWNER: As used in these specifications, "Owner" means the Texas Department of Transportation, as represented by an assigned representative.

N. PROVIDE: The term "provide" means "to furnish and install, complete and ready for intended use."

1.5 UTILITY CONNECTIONS AND INSPECTIONS

A. General: Refer to DIVISION 1 for construction phasing and time increments.

B. Fees and Costs: If, during the course of the construction, a need arises to purchase utilities, the Contractor shall pay all fees attendant thereto. If the City or other privately or publicly owned utility piping or electrical cable needs to be extended, relocated, or terminated, the Contractor shall pay all permits and construction/inspection fees associated with that particular work, the costs for which shall be included in the Contract price, including the cost of setting meters.

C. All work performed on this project is under the authority of the State of Texas, however, some local construction fees or construction or inspection permits may be required for new service taps, or new or modified connections to City or utility company controlled services. Refer to the Division 1 Section of specifications on “Special Conditions” for clarification, or contact the regulating entity directly. Note also that if inspections by personnel of jurisdictions other than TxDOT are specifically required by this document, then the Contractor is responsible for any fees or permits in connection to those requirements.

D. Compliance: The Contractor shall comply in every respect with all requirements of the National Fire Protection Association, the local Fire Department requirements and all utility company requirements. In no case does this relieve the Contractor of the responsibility of complying with these Specifications and Drawings where specified conditions are of higher quality or quantity than the requirements of the above-specified authorities. Where requirements of the Specifications and Drawings are more lenient than the requirements of the above authorities, the Contractor shall make installations in compliance with the requirements of the above authorities with no extra compensation.

1.6 COORDINATION OF THE CONTRACT DOCUMENTS

A. The interrelation of the Specifications, the Drawings, and the schedules are as follows: The Specifications determine the nature and quality of the materials and equipment, the Drawings establish the quantities, dimensions and details, and the schedules give the capacities and performance characteristics. If the Contractor requires additional clarification, a request shall be submitted in writing, and a response will be given in writing.

B. Should the Drawings or Specifications conflict within themselves, or with each other, the requirement with the greatest quantity and/or the highest quality shall prevail. The decision of the engineer of record for the system being installed shall be final.

1.7 FUTURE WORK

A. The work described in the drawings shall be performed under this contract. It shall be noted that certain equipment and systems have been sized to anticipate a possible future addition to the building. It is imperative that the Contractor provide and install the equipment and systems as shown in the drawings and schedules, of the sizes, capacities and dimensions indicated.

1.8 SUBMITTALS

A. Submit under provisions of UGC (the "Uniform General Conditions") and Special Conditions Section of the Specifications, and as required herein.

B. Mark all submittal literature to indicate the precise selection of materials and equipment being submitted. Note that if the specific model or material is not indicated in the submittal, and there is more than one choice possible, the submittal may be rejected and resubmittal will be required.

C. Changes in Contract requirements will not be granted and shall not be implied by approval of submitted alternative materials and equipment. Changes will only be effected through the Change Order process, in writing.

D. Proposed Products List: Include all equipment and materials specified in the following sections:

1. 15060 – Supports and Anchors
2. 15090 – Piping Insulation
3. 15097 – Ductwork Insulation
4. 15210 – Reciprocating Air Compressors
5. 15400 – Plumbing, Piping and Associated Materials
6. 15490 – Closed Loop Water Recycling System
7. 15540 – Fuel Fired Heaters
8. 15761 – Ductless Air Conditioning Systems
9. 15767 – Heat Pump Air Conditioning Systems
10. 15810 – Ductwork
11. 15820 – Ductwork Accessories
12. 15830 – Fans
13. 15850 – Air Outlets and Inlets
14. 15950 – Testing, Adjusting and Balancing

E. Provide submittals as required in each Division 15 section. Submit shop drawings and product data grouped to include complete submittals of related systems, products, and accessories in a single submittal.

F. Submit Fabrication Drawings whenever: 1) equipment proposed varies in physical size and arrangement from that indicated on the Drawings, thus causing rearrangement of equipment space, 2) where tight spaces require extreme coordination between ductwork, piping, conduit, and other equipment, 3) where called for elsewhere in these Specifications, and 4) where specifically requested by the Design Engineer. Fabrication Drawings shall be made at no additional charge to the Owner or the Design Engineer.

G. All required fabrication (shop) drawings, except as noted otherwise, shall be prepared at a scale of not less than 1/4" = 1'-0". Fabrication Drawings for ductwork and air handling units shall be drawn at a minimum scale of 3/8" = 1'-0". Submit three blueline prints of each Fabrication Drawing to the Design Engineer for review. Reproduction and submittal of the Construction Documents is not acceptable. The Engineer will review the drawing and return one print with comments.

1.9 SUBSTITUTION OF MATERIALS AND EQUIPMENT

A. It is not the intent of the drawings and/or specifications to limit products to any particular Manufacturer or to discriminate against an "approved equal" product produced by another Manufacturer. Products of a particular Manufacturer may be mentioned to define a standard for acceptance and to serve as a reference in comparison with other products. On the other hand, when a Manufacturer's name appears in these specifications or in the drawings, it shall not be interpreted that the Manufacturer is unconditionally acceptable as a provider of equipment for this project. The successful Manufacturer or supplier shall meet all of the provisions of the appropriate specification and/or equipment schedule.

B. The specified products have been used in preparing the drawings and specifications and thus establish minimum qualities with which substitutes must be at least equal to be considered acceptable. The burden of proof of equality rests with the Contractor. The decision of the Engineer is final.

C. In the event that the Contractor submits a proposal for a substitution, and the review and negotiation of the substitution (if handled in a timely, expedited manner) results in a delay of the contract work, then a reasonable extension of time for the contract may be allowed.

1.10 MATERIALS AND WORKMANSHIP

A. All materials, unless noted otherwise, shall be new, free from all defects, suitable for the intended use, and of the best quality of their respective kinds.

B. Materials and equipment shall be installed in accordance with the Manufacturer's recommendations and the best standard practice for the type of work involved.

C. All work shall be executed by mechanics and Contractors skilled in their respective trades, and the installations shall provide a neat, precise appearance.

D. Materials and/or equipment damaged in shipment or otherwise damaged prior to installation shall not be repaired, but shall be replaced with new materials and/or equipment.

E. Similar equipment shall be products of the same Manufacturer. For example, all air conditioning equipment, systems and components shall be manufactured and supplied by the same Manufacturer. All faucets, stops and hosebibbs shall be products of the same Manufacturer, with the exception that freezeproof hosebibbs may be products of a different Manufacturer than the rest of the faucets on the project.

1.11 FLAME SPREAD PROPERTIES OF MATERIALS

A. Materials and adhesives incorporated into this project shall conform to NFPA Standard 255, "Method of Test of Surface Burning Characteristics of Building Materials." The classification shall not exceed a flame spread rating of 25, nor exceed a smoke developed rating of 50, for all materials, adhesives, finishes, etc. specified for each system.

1.12 MANUFACTURER'S RECOMMENDATIONS

A. The Manufacturer's published directions and/or recommendations shall be followed in the delivery, storage, protection, installation, piping, and wiring of all equipment and material. The Contractor shall promptly notify the Engineer, in writing, of any conflict between the requirements of the Contract Documents and the Manufacturers' directions, and shall obtain the Engineer's guidance before proceeding with the work. Should the Contractor perform any such work that does not comply with the Manufacturers' directions or such instructions from the Owner, the Contractor shall bear all costs arising in connection with the deficiencies.

1.13 SPACE AND EQUIPMENT ARRANGEMENT

A. The physical size and space requirements of mechanical and electrical equipment indicated on the Drawings are approximate and based on the dimensions of a particular Manufacturer. While other Manufacturers may be acceptable, it is the responsibility of the Contractor to determine if the equipment proposed by the Contractor will fit in the space.

B. All equipment shall be installed in a manner to permit access to all surfaces. All valves, motors, drives, filters, and other accessory items shall be installed to allow for service requirements without disassembly of another part. Service space requirements recommended by Manufacturers shall be provided in the installation of the equipment as a minimum.

C. All equipment and piping shall be installed in a manner to provide the greatest amount of clearance for access and maintenance of systems and equipment. Installation of piping and equipment which blocks personnel access to all parts of chases or mechanical spaces is prohibited.

1.14 PROTECTION

A. The Contractor shall at all times take such precautions as may be necessary to properly protect all materials and equipment from damage from the time of delivery until the completion of the work. This shall include the erection of all required temporary shelters and supports to adequately protect any items stored in the open on the site from the weather, the ground and surrounding work; the cribbing of any items above the floor of the construction; and the covering of items in the incomplete building with tarpaulins or other protective covering; the installation of electric heaters in electrical switchgear and similar equipment to prevent moisture damage. Failure on the part of the Contractor to comply with the above will be sufficient cause for the rejection of the items in question.

B. The Contractor shall take particular care not to damage the building structure in performing work. All finished floors and finished surfaces shall be covered to prevent any damage by workers or their tools and equipment during the construction of the building.

1.15 SUPERVISION

A. Each Contractor and Subcontractor shall provide a competent superintendent or foreman for the work of their trade.

B. It shall be the responsibility of the General Contractor to assure that each superintendent studies all Drawings and is familiar with the work to be coordinated with and performed by other trades. The General Contractor shall coordinate the work of all trades and, before material is fabricated or installed, assure that the work will not cause an interference with another trade. Where interferences are encountered, they shall be resolved at the job site by the superintendents involved. Where interferences cannot be resolved without major changes to the Drawings, the matter shall be referred to the Engineer for a ruling. The decision of the Engineer shall be final.

1.16 SITE OBSERVATION

A. Site observation by the Architect, Engineer, Owner or any of their representatives, is for the express purpose of verifying compliance by the Contractor with the Contract Documents, and shall not be construed as construction supervision nor indication of approval of the manner or location in which the work is being performed as being a safe practice or place.

B. The safety of the workers on the site is the responsibility of the Contractor. By entering the site, the Contractor, Subcontractors, and their employees relieve the Owner of any responsibility for their safety, and accept complete responsibility for any unsafe acts or procedures which may cause them harm.

1.17 GUARANTEE

A. **The Contractor shall guarantee all labor and materials furnished and installed under this contract for a period of one (1) year from date of FINAL ACCEPTANCE by Owner.** Certain work and materials shall be guaranteed for a longer period when so specified. The guarantee shall cover the repair or replacement without additional cost to the Owner, of any defective material or faulty workmanship.

B. In addition to the above, the Contractor shall warrant all compressors to be free of defect, and shall provide a new compressor, of similar capacity and quality, at no cost to the Owner, if one should fail for any reason, within 5 (five) years of the date of final acceptance. This warranty shall be limited only to the material compressor, and shall not include labor or additional materials, such as Freon charge. Contractor shall provide installation labor and related materials at a reasonable cost.

C. If the Contractor fails to perform under these requirements, then the Uniform and Special General Conditions shall govern any required remedies the Owner may be forced to take.

1.18 CUTTING AND PATCHING

A. General: Provide openings in all new or existing construction indicated in the drawings, or as necessary for the proper installation of all systems included in the project.

B. Methods of cutting: Openings cut through concrete and masonry shall be made with masonry saws and/or core drills and at such locations acceptable to the Construction Inspector and Design Engineer. Impact-type equipment shall not be used except where specifically acceptable to the Design Architect and Engineer. Openings in precast concrete slabs for pipes, conduits, outlet boxes, etc., shall be core drilled to exact size.

C. Restoration: All openings shall be finished, closed around penetrating materials as specified, or restored to "as-new" condition under the appropriate Specification Section for the materials involved, and shall match remaining surrounding materials and/or finishes.

D. Masonry: Where openings are cut through masonry walls, provide and install lintels or other structural supports to protect the remaining masonry. Adequate supports shall be provided during the cutting operation to prevent any damage to the masonry occasioned by the operation. All structural members, supports, etc., shall be of the proper size and shape, and shall be installed in a manner acceptable to the Design Engineer.

E. Plaster: All mechanical work in areas containing plaster shall be completed prior to the application of the finish plaster coat. Cutting of finish plaster coat will not be permitted.

F. Special Note: No cutting, boring, or excavating which will weaken the structure shall be undertaken.

G. Refer to Division 2 specifications for requirements governing trenching.

1.19 ROOF PENETRATIONS AND FLASHING

A. Pipe, conduit and duct sleeves, pitch pockets, roof curbs, and flashings compatible with the roofing installation shall be provided and installed by a qualified Contractor for all roof penetrations. This shall be the responsibility of the General Contractor. All size and performance of each penetration, flashing and roof curb shall be coordinated with the piping, duct, and/or equipment requiring it. Refer to other specifications, drawings and/or schedules for specific requirements.

1.20 OPERATION PRIOR TO COMPLETION

A. When any piece of mechanical equipment is operable and it is to the advantage of the Contractor to operate the equipment for a purpose other than testing (for a period longer than one hour), the Contractor may do so, providing that the operation is properly supervised, and the Construction Inspector has given written permission. The warranty period shall not commence until such time as the equipment is operated for the beneficial use of the Owner, or date of substantial completion, whichever occurs first.

B. No equipment shall be operated, even for test purposes, until it has been thoroughly swept and vacuumed clean of dust, dirt, debris, and equipped with the proper filter.

C. Regardless of whether or not the equipment has or has not been operated, the Contractor shall properly clean the equipment, install clean filters, properly adjust, and complete all deficiency list items before final acceptance by the Owner as described in the following paragraph. The date of acceptance and performance certification shall be the same date.

1.21 CHECKING AND TESTING MATERIALS AND/OR EQUIPMENT

A. Check inspections shall include, but not be limited to, heating, insulation, ventilating equipment, controls, miscellaneous mechanical equipment and such other items hereinafter specified or specifically designated by the Engineer of Record.

B. Commissioning of equipment and systems shall consist of, as a minimum:
   1. Verify that installation is as designed and specified in the construction drawings and specifications.
   2. Complete Manufacturer's recommended installation and startup checks and perform the following:
      a. Inspect for visible damage and correct all damage.
      b. Verify Manufacturer recommended and designed minimum clearances have been provided.
      c. Verify that all service access panels are accessible and hinged doors are fully operational as installed.
      d. Check that labels and schedules are clearly visible.
      e. Check for and remove all construction debris.
      f. Verify that controls are connected and operable.
      g. Check for and remove shipping bolts, blocks and tie-downs.
      h. Verify that the proper size filters have been provided and are installed properly.
      i. Adjust vibration isolators.
      j. Check and repair all damaged insulation and vapor barriers.
      k. Check all manual and automatic dampers for free operation through their full travel.
   3. Lubricate bearings on fan.
   4. Check that fan rotates in correct direction without vibration or binding.
   5. Start units according to Manufacturer's written instructions. Complete startup sheets and attach copy with Contractor's startup report and close out documents. Contractor may use Manufacturer's printed startup sheet or a copy of the one attached at the end of this section.
   6. Check and record performance of interlocks and protection devices; verify sequences of operation.
   7. Operate unit for an initial period as recommended or required by Manufacturer or these specifications, whichever is greater.
   8. Calibrate and check full function and operation of thermostats.
   9. Adjust and check high temperature limits.
   10. Check for the free operation of internal isolators, and adjust if necessary.
   11. Check controls for correct sequencing of heating, cooling, and normal and emergency shutdown.
   12. Record all additional temperatures, pressures, air flows, amperages, etc., required to verify unit's operation at or above specified or scheduled efficiency rating.
   13. After startup and performance testing, replace filters, vacuum all coils, lubricate bearings and adjust belts.
   14. Demonstrate operation to TxDOT maintenance personnel as detailed in paragraph in Part 3 of this specification section.

1.22 CLEANING AND PAINTING

A. All equipment furnished by the mechanical Subcontractors shall be delivered to the job with a suitable factory protective finish. The following materials shall not be painted: copper, galvanized metal, stainless steel, fiberglass, and plastics such as PVC, PVDF, polypropylene, etc.

B. If painting is required, before painting, materials and equipment surfaces shall be thoroughly cleaned of cement, plaster, and other foreign materials, and all oil and grease shall be removed. Such surfaces shall be carefully wiped and all cracks and corners scraped out. Exposed metal work shall be carefully brushed down with steel brushes to remove rust and other spots and left smooth and clean.

C. Equipment nameplates shall be protected from being painted; suitable protection shall be afforded to the plates to prevent their being rendered illegible due to the painting operation, or receiving any overspray or spatter.

D. Scope of painting for Division 15 work in areas other than those defined as “exposed” is as follows:
1. All fuel piping (natural gas, LPG, etc.) installed under this project shall be painted whether concealed or exposed, in all areas of the project without exception. Fuel piping shall be painted “safety yellow” as defined by OSHA or furnished with Manufacturer applied “safety yellow” finish.
2. All uncovered, unprotected steel pipe, supports, exposed pipe and hanger rod threads shall be cleaned and painted with two coats of Tropical Paint Co. No. 77-black asphaltic emulsion. Galvanized steel and copper lines shall not be painted.
3. All canvas finishes including those in concealed spaces shall be painted with one sizing coat if not already sized, containing mildew resistant additive and Arabol adhesive prior to any other specified finish paint.
4. If insulated, steel piping shall be prime-painted prior to insulation.

E. The surfaces to be finish painted shall first be prepared as follows:
1. On canvas finishes pretreat as specified above. Insulated surfaces having vapor barrier jacket exposed to view shall first be painted with one (l) coat of sealer.
2. Galvanized and black steel surfaces shall first be painted with one (1) coat of P&L (Pratt & Lambert) galvanized metal primer. Primer may be eliminated on concealed fire and gas piping.
3. Painted aluminum surfaces shall first be painted with one (1) coat of P&L zinc chromate primer.
4. Cast iron pipe shall first be primed with a “nonbleed” primer.
5. The underside of all cast iron sinks not recessed in a cabinet are included as items to be painted in exposed areas.
6. All ferrous metal surfaces without a protective finish and not galvanized in exposed and concealed areas including chases, and above ceilings shall be painted with two (2) coats of P&L zinc chromate primer as the construction progresses to protect against oxidation and deterioration.

PART 2 - PRODUCTS (Not Used)

PART 3 - EXECUTION

3.1 INSTALLATION METHODS

A. Support: All piping, ducts and conduits shall be adequately and properly supported from the building structure by means of hanger rods or clamps fastened to the building structure as herein specified. Sufficient support shall be provided and installed to restrain the movement of equipment, piping, ductwork and conduits from lateral movement during operation.

B. All pipe, conduits, etc., shall be cut accurately to measurements established from the actual building conditions and shall be worked into place without springing or forcing. All ducts, pipes and conduits run exposed in machinery and equipment rooms shall be installed parallel to the building lines, except that piping shall be sloped to obtain the proper pitch. Piping, ducts and conduits run in furred ceilings, etc., shall be similarly installed, unless noted otherwise. Conduits in furred ceilings and in other concealed spaces shall be neatly grouped and racked. All conduit and pipe openings shall be maintained in a sealed condition until the systems are closed with final connections.

C. All openings through all floors, walls, and roofs, etc., regardless of material, shall be sleeved for piping, ductwork, conduit, cable trays, etc. All penetrations shall be sleeved. Sleeves shall be set in new construction before concrete is poured, as cutting holes through any part of the concrete will not be permitted unless acceptable to the Architect/Engineer. See Section 15060 for sleeve specifications.

3.2 REQUIRED INSPECTIONS

A. Prior to the installation of any ceiling material, gypsum, plaster, or acoustical board, the Contractor shall notify the construction inspector so that arrangement can be made for an inspection of the above-ceiling area about to be “sealed” off. The Contractor shall give as much advance notice as possible, but no less than five (5) working days.

B. All above-ceiling areas will be subject to a formal inspection before ceilings are installed or installation is otherwise concealed from view. All mechanical and electrical work at and above the ceiling including items supported by the ceiling grid such as air inlets or outlets and lighting fixtures shall be complete and installed in accordance with contract requirements, including power to lighting fixtures, fans, and other powered items. Adequate lighting shall be provided to permit thorough inspection of all above-ceiling items. The purpose of this inspection is to verify the completeness and quality of the installation of the air conditioning systems, the electrical systems, the plumbing systems, and any other special above ceiling systems. The ceiling supports (tee bar or lath) shall be in place so that access panel and light fixture locations are identifiable and so that clearances and access provisions may be evaluated.

C. No ceiling materials may be installed until the resulting deficiency list from this inspection is satisfied and the Construction Inspector has given approval.

3.3 TRAINING

A. When required in a Division 15 specification section, Contractor shall provide a minimum of six (6) hours of training for a minimum of four (4) of the Owner's personnel, on the operation and maintenance of the mechanical and plumbing systems, including filter replacement, the operation and programming of thermostats, and the location of access doors to hidden isolation valves, water hammer arrestors, etc. Contractor shall provide complete, written, Manufacturer's literature on all mechanical and plumbing systems for each person trained.

3.4 TESTING

A. Tests for specific systems and equipment are specified in associated specification sections or in the drawings. All tests specified or indicated shall be performed with the Owner present to witness such tests. All tests shall be individually documented, and the test report for each shall be included in the final documentation submitted to the Owner at the completion of the project. Data shall be delivered to the Design Engineer as specified under "Requirements for Final Acceptance". The documentation shall include as a minimum (see sample forms at the end of this section):

1. Contractor firm name, supervisor's name, and name of personnel performing test
2. Date and time of beginning of test, and date and time of test completion
3. Description of equipment or system being tested
4. Description of test being performed
5. Description of outcome of test
6. Dated signatures of person performing test, Contractor's supervisor, and Owner's representative, including legibly printed names and titles

B. The Construction Inspector shall be notified in writing at least 5 working days prior to each test and other Specification requirements requiring action on the part of the Construction Inspector. All equipment shall be placed in operation and tested for proper automatic control requirements before the balancing agency starts their work.

END OF SECTION

(Attachments follow)

ATTACHMENT TO SECTION 15050 - Sample test log forms (see Section 15050, Part 3, "TESTING."):

PROJECT: _____ **_____ District, _____ County** **Test Log**
Contractor firm name: Address: Phone Number:
Contractor Supervisor:
Description of System:
Description of Test:
Beginning of Test:(Date and Time)
Completion of Test:(Date and Time)
Outcome of test:
TEST IS APPROVED IF ALL SIGNATURES APPEAR BELOW **Contractor Supervisor:** Name and title _____ Signature _____ Date _____ **Testing Contractor:** Name and title _____ Signature _____ Date _____ **Owner:** Name and title _____

Signature _____ Date _____

PROJECT: _____
_____ District, _____ County
HVAC Equipment Startup Sheet

Equipment _____ Model #_____ Serial #_____

Technician _____ Date of startup_____

Additional accessories _____

Compressor voltage _____ amperage L1_____L2_____L3_____

Condenser Fan voltage _____ amperage L1_____L2_____L3_____

Evaporator Fan voltage _____ amperage L1_____L2_____L3_____

Heater voltage _____ amperage L1_____ L2_____ L3_____

Compressor Oil Pressure_____ Suction line Temperature_____ Pressure_____

Discharge Line Temperature _____Pressure_____

Hi-Lo Pressure cut-out_____

EAT_____ LAT_____

Crankcase heater amps_____

Freezestat setting_____

Fan Speed_____ CFM_____ Damper_____

Evaporator EAT(DB)_____EAT(WB)_____DAT(DB)_____DAT(WB)_____

Fan Speed_____CFM_____Damper_____

Superheat_____

Condensate drain operating _____ Secondary pan switch operating _____

Other/additional items:

<u>Owner Representative</u>:

Name and title _____

Signature _____ Date _____

SECTION 15060

SUPPORTS AND ANCHORS

PART 1 - GENERAL

1.1 SECTION INCLUDES

A. Pipe and equipment hangers and supports

B. Equipment bases and supports

C. Sleeves and seals

D. Flashing and sealing equipment and pipe stacks

1.2 RELATED SECTIONS

A. Section 15050 – Basic Mechanical Requirements

B. Section 15090 – Piping Insulation

C. Section 15097 – Ductwork Insulation

D. Section 15210 – Reciprocating Air Compressors

E. Section 15400 – Plumbing Piping and Associated Materials

F. Section 15540 – Fuel Fired Heaters

G. Section 15767 – Heat Pump Air Conditioning Systems

H. Section 15810 – Ductwork

I. Section 15820 – Ductwork Accessories

J. Section 15830 – Fans

K. Section 15850 – Air Outlets and Inlet

L. Section 15950 – Testing, Adjusting and Balancing

1.3 REFERENCES

A. ASME B31.2 – Fuel Gas Piping

B. ASME B31.9 – Building Services Piping

C. ASTM F708 – Design and Installation of Rigid Pipe Hangers

D. MSS SP58 – Pipe Hangers and Supports - Materials, Design and Manufacturer

E. MSS SP69 – Pipe Hangers and Supports - Selection and Application

F. MSS SP89 – Pipe Hangers and Supports - Fabrication and Installation Practices

G. NFPA 13 – Installation of Sprinkler Systems

H. SMACNA – HVAC Duct Construction Standards, latest edition

I. UL 203 – Pipe Hanger Equipment for Fire Protection Service

J. UPC – Uniform Plumbing Code, latest edition

K. UMC – Uniform Mechanical Code, latest edition

1.4 SUBMITTALS

A. Submit under provisions of Uniform General Conditions and Special Conditions, and Section 15050.

B. Product Data: Provide Manufacturers catalog data including load capacity.

C. Manufacturer's Installation Instructions: Indicate special procedures and assembly of components.

1.5 REGULATORY REQUIREMENTS

A. Conform to applicable code or standard for support of all systems.

PART 2 - PRODUCTS

2.1 PIPE HANGERS AND SUPPORTS

A. Manufacturers:
1. Grinnell
2. Approved equal

B. Supports, hangers, anchors and guides shall be provided for all horizontal and vertical piping.

C. All auxiliary steel required for pipe supports, anchors, guides, etc. shall be provided by the Mechanical Trades unless specifically indicated to be provided by others.

D. Contractor shall review all Drawings, including Structural Drawings, for details regarding pipe supports, anchors, hangers, and guides.

E. All pipe supports shall be of type and arrangement to prevent excessive deflection, to avoid excessive bending stresses between supports, and to eliminate transmission of vibration.

F. All rod sizes indicated in this Specification are minimum sizes only. This trade shall be responsible for structural integrity of all supports, anchors, guides, etc. All structural hanging materials shall have a minimum safety factor of 5 built in.

G. All floor supports of piping and equipment shall be structural steel, pipe, tubing, Unistrut, or similar materials. Threaded rod shall not be used to support piping or equipment from the floor.

H. Anchor points as indicated on Drawings or as required shall be located and constructed to permit the piping system to take up its expansion and contraction freely in opposite directions away from the anchored points.

I. Pipe supports, hangers, anchors, and guides shall be fastened to the structure only at such points where the structure is capable of restraining the forces in the piping system.

J. Hangers supporting and contacting brass or copper lines 3" in size and smaller shall be Grinnell Fig. CT-99c, adjustable, copper plated, tubing ring. Hangers supporting and contacting brass or copper lines 4" and larger shall be Grinnell Fig. 260, adjustable clevis, with a nut above and below the hanger, and approved neoprene isolating material between pipe (or tubing) and hanger on the support rod. For insulated copper or brass domestic water lines, hangers for all sizes of pipe shall be Grinnell Fig. 300, adjustable clevis, with a nut above and below the hanger, and approved neoprene isolating material between pipe (or tubing) and hanger on the support rod. Isolate all copper or brass lines from all ferrous materials with approved dielectric materials. Hangers supporting and contacting plastic piping shall be of equal design, but shall be padded with neoprene material or equal. The padding material and the configuration of its installation shall be submitted for approval.

K. Hangers supporting insulated lines where the outside diameter of the insulation is the equivalent of 8" diameter pipe or smaller in size and supporting all ferrous lines 6" and smaller in size shall be Grinnell Fig. 260, adjustable clevis, with a nut above and below the hanger on the support rod.

L. Hangers supporting and contacting ferrous lines larger than 6" in size and outside of insulation on lines with the outside diameter equivalent to 10" diameter pipe shall be Grinnell Fig. 260, adjustable clevis, with a nut above and below the hanger on the support rod.

M. Each hanger shall be properly sized to fit the supported pipe or fit the outside of the insulation on lines where specified. Hangers for dual or low temperature insulation pipes shall bear on the outside of the insulation, which shall be protected by support shields as specified in Section 15090 – PIPING INSULATION. Protect insulation from crushing by means of a section of rigid insulation to be installed at hanger points. Hangers for high temperature insulated pipes and all insulated hot and cold domestic water pipes shall

be encased in the insulation unless supported by trapezes in which case shield and rigid insulation shall be provided as specified above for low temperature insulated pipes.

N. Supports for vertical piping in concealed areas shall be double bolt riser clamps, Grinnell Fig. 261, or other approved equal, with each end having equal bearing on the building structure, and located at each floor. Two-hole rigid pipe clamps at 4 ft. on center or Kindorf channels and Grinnell Fig. 261 riser clamps may be used to support pipe from vertical surfaces or members where lines are not subject to expansion and contraction. Where brass or copper lines are supported on trapeze hangers or Kindorf channels the pipes shall be isolated from these supports with plastic tape with insulating qualities, or strut clamps as manufactured by Specialty Products Company, Stanton, California.

O. Pipe Supports in Chases and Partitions, or as detailed in the drawings: Horizontal and vertical piping chases and partitions shall be supported by hangers or other suitable support. Pipes serving plumbing fixtures and equipment shall be securely supported near the point where pipes penetrate the finish wall. Supports shall be steel plate, angles or special channels such as Unistrut mounted in vertical or horizontal position. Pipe clamps such as Unistrut P2426, P2008, P1109 or other approved clamps shall be attached to supports. Supports shall be attached to wall or floor construction with clip angles, brackets, or other approved method. Supports may be attached to cast iron pipe with pipe clamp, or other approved method. All copper or brass lines shall be isolated from ferrous metals with dielectric materials to prevent electrolytic corrosion.

P. Perforated strap iron (“plumbers tape”) or wire will not, under any circumstances, be acceptable as hanger material.

Q. Attachment:

1. The load and spacing on each hanger and/or insert shall not exceed the safe allowable load for any component of the support system, including the concrete which holds the attachments. Reinforcement at inserts shall be provided as required to develop the strength required.
2. Inserts for piping shall be of a type which will not interfere with reinforcing as shown on the structural Drawings and which will not displace excessive amounts of structural concrete.
3. All pipe supports shall be designed and installed to avoid interference with other piping, hangers, ducts, electrical conduit, supports, building structures, equipment, etc. All piping shall be installed with due regard to expansion and contraction and the type of hanger method of support, location of support, etc. shall be governed in part by this Specification.
4. Pipe hangers shall be attached to the structure as follows:
    a. Steel Beams: Where pipes and loads are supported under steel beams, approved type beam clamps shall be used.
    b. Steel Trusses: Where pipes and loads are supported from steel trusses, hanger rods shall be attached to bottom chord with brackets or angle clips.

R. Trapezes: Where multiple lines are run horizontally at the same elevation and grade, they may be supported on trapezes of Kindorf, Elcen, or approved equal, channel-suspended

on rods or pipes. Trapeze members including suspension rods shall each be properly sized for the number, size, and loaded weight of the lines they are to support.

S. Finishes: All hangers on piping including clevis hangers, rods, inserts, clamps, stanchions, and brackets, shall be dipped in Zinc Chromate Primer before installation. Rods shall be galvanized or cadmium plated after threading, in lieu of dipping zinc chromate. Universal concrete inserts shall be cadmium plated.

T. Provide any special foundations, hangers and supports indicated on the Drawings, specified elsewhere herein; or required by conditions at the site. Hangers and supporting structures for suspended equipment shall be provided as required to support the load from the building structure in a manner acceptable to the Engineer.

2.2 ACCESSORIES

A. Hanger Rods: Galvanized mild steel threaded both ends, galvanized threaded one end, or galvanized continuous threaded.

B. Sleeves: Provide sleeves for all piping and duct penetrations of walls and floor. Galvanized schedule 40 pipe for all pipe and conduit except uninsulated copper pipe. Use copper pipe as sleeves for uninsulated copper pipe.

2.3 INSERTS

A. Inserts: Malleable iron case of galvanized steel shell and expander plug for threaded connection with lateral adjustment, top slot for reinforcing rods, lugs for attaching to forms; size inserts to suit threaded hanger rods.

2.4 FLASHING

1. Metal Flashing: 26 gage galvanized steel.
2. Metal Counterflashing: 22 gage galvanized steel.
3. Roofing Flashing: See specifications for Roofing, elsewhere in these Specifications.
4. Caps: Steel, 22 gage minimum; 16 gage at fire resistant elements.

2.5 EQUIPMENT ROOF CURBS

A. Roof curbs shall be supplied and installed by the roof Manufacturer as specified in the architectural specifications. The sizes and types of roof curbs shall be coordinated with equipment requirements.

PART 3 - EXECUTION

3.1 INSTALLATION

A. Install all materials in accordance with Manufacturer’s instructions.

3.2 INSERTS

A. Provide inserts for placement in concrete formwork.

B. Where inserts are omitted, drill through concrete slab from below and provide through-bolt with recessed square steel plate and nut recessed into and grouted flush with slab.

3.3 PIPE HANGERS AND SUPPORTS

A. Support horizontal piping as scheduled.

B. Install hangers to provide minimum 1/2 inch space between finished covering and adjacent work.

C. Place hangers within 12 inches of each horizontal elbow.

D. Use hangers with 1-1/2 inch minimum vertical adjustment.

E. Support horizontal cast iron pipe adjacent to each hub, with 5 feet maximum spacing between hangers.

F. Support vertical piping at every floor. Support vertical piping at each floor at hub.

G. Where several pipes can be installed in parallel and at same elevation, provide multiple or trapeze hangers.

H. Support riser piping independently of connected horizontal piping.

I. Provide copper plated hangers and supports for copper piping.

J. Design hangers for pipe movement without disengagement of supported pipe.

K. Prime coat exposed steel hangers and supports. Hangers and supports located in crawl spaces, pipe shafts, and suspended ceiling spaces are not considered exposed, but shall be corrosion protected with galvanized plating.

L. Hanger Rods: (NOTE: All hanger rods shall be trimmed neatly so that no more than 1 inch of excess hanger rod protrudes beyond the hanger nut. In the event a rod is intentionally but temporarily left excessively long, for sloped or insulated lines for example, the contractor shall take appropriate measures to protect the pipe or other materials from damage.)

M. Provide and install sufficient support and lateral bracing to restrain all equipment and piping systems from lateral movement during operation of supported equipment and system(s).

3.4 FLASHING

A. Provide flexible flashing and metal counterflashing where piping and ductwork penetrate weather or weatherproofed walls, floors, and roofs.

B. Flash vent and soil pipes projecting 3 inches minimum above finished roof surface with lead worked one inch minimum into hub, 8 inches minimum clear on sides with 24 x 24 inches sheet size. For pipes through outside walls, turn flanges back into wall and caulk, metal counterflash, and seal.

C. Flash floor drains in floors with topping over finished areas with lead, minimum 10 inches clear on sides with minimum 48-inch diameter sheet size. Fasten flashing to floor drain clamp device.

D. Seal floor watertight to adjacent materials.

E. Adjust storm collars tight to pipe with bolts; caulk around top edge. Use storm collars above roof jacks. Screw vertical flange section to face of curb.

3.5 SLEEVES

A. Set sleeves in position in formwork. Provide reinforcing around sleeves.

B. Size sleeves large enough to allow for movement due to expansion and contraction. Provide for continuous insulation wrapping.

C. Extend sleeves through floor four inches above finished floor level. Caulk sleeves.

D. Sleeves through walls below grade shall be sized to accept a Link-Seal or similar type sealing system.

E. Where piping, ductwork or conduit penetrates floor, ceiling, or wall, close space between pipe or duct and adjacent work with fire stopping insulation and caulk air tight. Provide close fitting metal collar or escutcheon covers, as appropriate, at both sides of penetration.

F. Install chrome plated steel or stainless steel escutcheons at finished surfaces.

1.1 HANGER SPACING SCHEDULE

PIPE SIZE (inches)	MAX. HANGER SPACING (feet)	HANGER ROD (inches)
1/2 to 1-1/4	6.5	3/8
1-1/2 to 2	10	3/8
Plastic Pipe (All Sizes)	4	3/8
C.I. Bell and Spigot (or No-Hub)	5	5/8
NOTE: Also support all Cast Iron Bell and Spigot, and No-Hub piping at all joints and fittings. ("Plastic Pipe" refers to PVC, CPVC, PVDF, PP, PPDV, PE, etc.)		

END OF SECTION

SECTION 15090

PIPING INSULATION

PART 1 - GENERAL

1.1 SECTION INCLUDES

A. Piping insulation

B. Jackets and accessories

1.2 PRODUCTS FURNISHED BUT NOT INSTALLED UNDER THIS SECTION

A. Section 15400 – Plumbing Piping and Associated Materials: Placement of hangers and hanger inserts

1.3 RELATED SECTIONS

A. Section 15050 – Basic Mechanical Requirements

B. Section 15400 – Plumbing Piping and Associated Materials

1.4 REFERENCES

A. ASTM B209 – Aluminum and Aluminum-Alloy Sheet and Plate

B. ASTM C177 – Steady-State Heat Flux Measurements and Thermal Transmission Properties by Means of the Guarded-Hot-Plate Apparatus

C. ASTM C195 – Mineral Fiber Thermal Insulation Cement

D. ASTM C335 – Steady-State Heat Transfer Properties of Horizontal Pipe Insulation

E. ASTM C449 – Mineral Fiber Hydraulic-setting Thermal

F. ASTM C518 – Steady-State Heat Flux Measurements and Thermal Transmission Properties by Means of the Heat Flow Meter Apparatus

G. ASTM C533 – Calcium Silicate Block and Pipe Thermal Insulation

H. ASTM C534 – Preformed Flexible Elastomeric Cellular Thermal Insulation in Sheet and Tubular Form

I. ASTM C547 – Mineral Fiber Preformed Pipe Insulation

J. ASTM C585 – Inner and Outer Diameters of Rigid Thermal Insulation for Nominal Sizes of Pipe and Tubing (NPS System)

K. ASTM C591 – Rigid Preformed Cellular Urethane Thermal Insulation

L. ASTM C610 – Expanded Perlite Block and Pipe Thermal Insulation

M. ASTM C921 – Properties of Jacketing Materials for Thermal Insulation

N. ASTM D1056 – Flexible Cellular Materials – Sponge or Expanded Rubber

O. ASTM D1667 – Flexible Cellular Materials – Vinyl Chloride Polymers and Copolymers (Closed Cell Foam)

P. ASTM D2842 – Water Absorption of Rigid Cellular Plastics

Q. ASTM E84 – Surface Burning Characteristics of Building Materials

R. ASTM E96 – Water Vapor Transmission of Materials

S. NFPA 255 – Surface Burning Characteristics of Building Materials

T. UL 723 – Surface Burning Characteristics of Building Materials

1.5 SUBMITTALS

A. Submit under provisions of Uniform General Conditions and Special Conditions, and Section 15050.

B. Product Data: Provide product description, list of materials and thickness for each service, and locations.

C. Manufacturer's Installation Instructions: Indicate procedures which ensure acceptable workmanship and installation standards will be achieved.

1.6 QUALITY ASSURANCE

A. Materials: Flame spread / smoke developed rating of 25/50 or less in accordance with NFPA 255.

1.7 QUALIFICATIONS

A. Applicator: Company specializing in performing the work of this section with minimum three years experience.

1.8 DELIVERY, STORAGE, AND HANDLING

A. Deliver, store, protect, and handle products to site under provisions of Uniform General Conditions, Special Conditions and Section 15050.

B. Deliver materials to site in original factory packaging, labeled with Manufacturer's identification, including product density and thickness.

C. Store insulation in original wrapping and protect from weather and construction traffic.

D. Protect insulation against dirt, water, chemical, and mechanical damage.

1.9 ENVIRONMENTAL REQUIREMENTS

A. Maintain ambient temperatures and conditions required by Manufacturers of adhesives, mastics, and insulation cements.

B. Maintain temperature during and after installation for minimum period of 24 hours.

PART 2 - PRODUCTS

2.1 HOT AND COLD DOMESTIC WATER

A. All domestic (potable) hot and cold water lines in buildings, including valves, strainers, unions, flanges, etc., except where specifically noted to the contrary, shall be insulated.

B. Potable water piping shall be insulated with 3½ pound per cubic foot density preformed fiberglass insulation with a factory applied All Service Jacket, vapor sealing all joints, and factory performed fittings with vapor seal. Where pipe chases are tight, adequate provision shall be made at the rough in stage utilizing offset fittings or other means (except springing the pipe) to insure that insulation can be applied throughout the length of the pipe.

C. Valves shall be insulated with mitered pipe covering with voids filled with glass fiber blanket insulation. Valves and fittings shall be vapor sealed with a water base asphaltic emulsion. Fittings on concealed insulation shall be built up to the thickness of adjacent insulation with glass fiber fitting wrap and shall be finished with Glasfab tape embedded in vapor barrier emulsion. Exposed fitting insulation shall be built up to same thickness as adjoining pipe insulation with one coat cement and after drying shall be finished with a white vapor seal and canvas jacket secured with “Arabol” adhesive and be suitable for painting.

D. All insulated piping in outdoors locations shall be covered with smooth finished aluminum jacketing with ASJ and preformed fitting covers. Secure in place with 3/4” aluminum bands and seals, 3 per 3 foot section of jacketing. Jacketing to overlap 3”

E. Seams in jacket shall be placed in the least noticeable locations. Where seams, joint or fittings are rough they shall be covered with an application of insulating cement trowelled on smoothly before the canvas is applied with Arabol adhesive. The canvas must be free of wrinkles and have a smooth, neat appearance.

F. The hot and cold water piping and drain piping under all lavatories shall be insulated. Insulation shall be Truebro “Handi Lav-guard” insulation kit, Model #102W with accessory #105W for offset tailpiece, if applicable, conforming to ADA article 4.19.4, ANSI A117.1, BOCA article P-1203.4, and Texas Accessibility Standards. Insulation shall be as specified or approved equal. All under sink piping shall be insulated without exception.

2.2 CONDENSATE DRAIN PIPING

A. Condensate drain piping from fan and coil units, coil banks, drinking fountain refrigeration units, drinking fountain drain piping, and other items of piping or equipment subject to condensation forming on the surface shall be insulated with 25/50 rated (flame spread/smoke developed), closed cell elastomeric thermal insulation. Elastomeric products shall be supplied in a preslit tubular form with a pressure sensitive adhesive system for closure and vapor sealing of the longitudinal joint. All elastomeric insulating products shall be guaranteed not to react with copper piping.

PART 3 - EXECUTION

3.1 EXAMINATION

A. Verify that piping has been tested before applying insulation materials.

B. Verify that surfaces are clean, foreign material removed, and dry.

3.2 INSTALLATION

A. Install materials in accordance with Manufacturer's instructions.

B. On exposed piping, locate jacket cover seams in least visible locations, but not higher than at the side of the pipe at the "90°" position, with the seam lapped such that the lap is directed down.

C. Insulated dual temperature pipes or cold pipes conveying fluids below ambient temperature:
1. Provide vapor barrier jackets, factory applied or field applied.
2. Insulate and seal vapor barrier at all fittings, joints, and valves with molded insulation of like material and thickness as adjacent pipe.
3. Finish with glass cloth and vapor barrier adhesive.
4. PVC fitting covers may be used at the contractor's option.
5. Continue insulation through walls, sleeves, pipe hangers, and other pipe penetrations.
6. Insulate entire system including fittings, valves, unions, flanges, strainers, flexible connections, pump bodies, and expansion joints.

D. For insulated pipes conveying fluids above ambient temperature:
1. Provide standard jackets, with or without vapor barrier, factory applied or field applied.
2. Insulate fittings, joints, and valves with insulation of like material and thickness as adjoining pipe.
3. Finish with glass cloth and adhesive.
4. PVC fitting covers may be used at the contractor's option.
5. For hot piping conveying fluids 140 degrees F or less, do not insulate flanges and unions at equipment, but bevel and seal ends of insulation.

6. For hot piping conveying fluids over 140 degrees F, insulate flanges and unions, including those at equipment, but label the insulation to indicate a concealed flange or union.

E. Inserts and Shields:
   1. Application: Install shields between all hanger and piping insulation contact points. Install inserts on piping 2 inches diameter or larger.
   2. Shields: Galvanized steel between pipe hangers or pipe hanger rolls and inserts.
   3. Insert Location: Between support shield and piping and under the finish jacket.
   4. Insert Configuration: Minimum 6 inches long, of same thickness and contour as adjoining insulation; may be factory fabricated.
   5. Insert Material: Heavy density insulating material suitable for the planned temperature range, and the weight of the pipe.

F. Finish insulation at supports, protrusions, and interruptions.

G. All piping, equipment, ductwork, all plenums including metal and masonry construction, fans, etc., shall be insulated as indicated on the Drawings, as specified herein, and as required for a complete system. In each case, the insulation shall be equal to that specified and materials applied and finished as described in these Specifications.

H. All insulation shall be applied by mechanics skilled in this particular work and regularly engaged in such occupation. All insulation shall be applied in strict accordance with these Specifications and with factory printed recommendations on items not herein mentioned. Unsightly, inadequate, or sloppy work will not be acceptable, and all such work shall be removed and replaced as many times as necessary to achieve an acceptable installation.

I. All insulation, jacket, adhesives, mastics, sealers, etc., utilized in the fabrication of these systems shall meet NFPA 255 for fire resistant ratings (maximum of 25 flame spread and 50 smoke developed ratings) and shall be approved by the insulation Manufacturer for guaranteed performances when incorporated into their insulation system, unless a specific product is specified for a specific application, and is stated as an exception to this requirement. Certificates to this effect shall be submitted along with Contractor's submittal data for this section of the Specifications. No material may be used that, when tested by the ASTM E84-89 test method, is found to melt, drip or delaminate to such a degree that the continuity of the flame front is destroyed, thereby resulting in an artificially low flame spread rating, except where noted otherwise. A statement by the Manufacturer in the submittal literature that the material meets the requirements of NFPA 255 or UL 623 shall be deemed acceptable to meet the requirements of this specification.

J. All surfaces to be insulated shall be clean and dry before applying the insulation. All sections of molded pipe covering shall be firmly butted together. Where insulation terminates, it shall be neatly beveled and finished. No insulation shall be applied until the pipe, duct, etc., has been pressure tested and found tight. Piping, flexible connections, flanges, valves, strainers, and unions shall be covered unless specifically noted otherwise. Flexible connections on duct, if used, shall not be covered. All materials used shall be fire retardant or nonflammable. Refer to Section 15050.

K. Where vapor barriers are required, the vapor barrier shall be on the outside. Extreme care shall be taken that the vapor barrier is unbroken. Joints, etc., shall be sealed. Where insulation with a vapor barrier terminates, it shall be sealed off with the vapor barrier being continuous to the surface being insulated. Ends shall not be left raw.

L. Where canvas finish is specified, use Arabol lagging adhesive to prevent mildew in securing canvas. Do not use wheat paste. In addition, cover all canvas insulation with a fire retardant coating.

M. The handling and installation of all insulation materials shall be performed in strict accordance with the Manufacturer's recommendations.

3.3 INSULATION SCHEDULE

Piping Type	Minimum Insulation Thickness
Hot and Cold Domestic Water	1"
Under Sink Domestic Water and Drain	(material as specified)
Condensate Drain Piping	½"

END OF SECTION

SECTION 15097

DUCTWORK INSULATION

PART 1 - GENERAL

1.1 SECTION INCLUDES

A. Ductwork insulation

B. Insulation jackets

1.2 RELATED SECTIONS

A. Section 15050 – General Mechanical Requirements

B. Section 15810 – Ductwork

C. Section 15820 – Ductwork Accessories

1.3 REFERENCES

A. TM B209 – Aluminum and Aluminum-Alloy Sheet and Plate

B. ASTM C518 – Steady-State Heat Flux Measurements and Thermal Transmission Properties by Means of the Heat Flow Meter Apparatus

C. ASTM C553 – Mineral Fiber Blanket and Felt Insulation

D. ASTM C612 – Mineral Fiber Block and Board Thermal Insulation

E. ASTM E84 – Surface Burning Characteristics of Building Materials

F. ASTM E96 – Water Vapor Transmission of Materials

G. NFPA 255 – Surface Burning Characteristics of Building Materials

H. SMACNA – HVAC Duct Construction Standards - Metal and Flexible

I. UL 723 – Surface Burning Characteristics of Building Materials

1.4 SUBMITTALS

A. Submit under provisions of the Uniform General Conditions and Special Conditions, and Section 15050.

B. Product Data: Provide product description, list of materials and thickness for each service, and locations.

C. Manufacturer's Installation Instructions: Indicate procedures which ensure acceptable workmanship and installation standards will be achieved.

1.5 QUALITY ASSURANCE

A. Materials: Flame spread/smoke developed rating of 25/50 in accordance with NFPA 255.

1.6 QUALIFICATIONS

A. Applicator: Company specializing in performing the work of this section with minimum three years experience.

1.7 DELIVERY, STORAGE, AND HANDLING

A. Deliver, store, protect and handle products to site under provisions of Uniform General Conditions, Special Conditions and Section 15050.

B. Deliver materials to site in original factory packaging, labeled with Manufacturer's density and thickness.

C. Store insulation in original wrapping and protect from weather and construction traffic.

D. Protect insulation against dirt, water, chemical, and mechanical damage.

1.8 ENVIRONMENTAL REQUIREMENTS

A. Maintain ambient temperatures and conditions required by Manufacturers of adhesives, mastics, and insulation cements.

B. Maintain temperature during and after installation for minimum period of 24 hours.

PART 2 - PRODUCTS

2.1 INSULATION

A. Rigid Board Insulation
   1. Three pound per cubic foot minimum density glass fiber semi-rigid board insulation with fiber perpendicular to the surface and with factory applied white foil reinforced vapor barrier jacket (ASJ). Insulation shall be equal to E.O. Woods Company "Rigid-Wrap".
   2. The insulation shall be secured to the ducts with mechanical fasteners; "Stick-clips", Graham Pins or Speed Clips, and shall be spaced approximately 12" on center on bottom of duct and where required elsewhere to hold insulation securely against the duct as noted in the published recommendations of the Insulation Manufacturer.

3. After insulation is in place, all joints and seams shall be sealed with Foster 30-35 white vapor barrier emulsion applied over a 3" wide strip of Duramesh Glass Fabric. All protrusions through the vapor barrier shall be thoroughly sealed.
4. On ducts that are reinforced with standing seams or angle iron stiffeners 1" and over in height, the Contractor shall apply a strip of fiberglass board 1" thick by 6" wide, sealing same to the other insulation with mastic.
5. Vapor sealing of joints and seams is not required on hot duct application where concealed.

B. External Wrap Blanket Insulation

1. Blanket insulation with a thermal conductivity (K) of 0.27 or less similar in construction to Owens-Corning Fiberglass Series one and a half pound per cubic foot minimum density with foil reinforced Kraft (FRK) vapor barrier facing. Insulation shall be wrapped tightly on the ductwork with all circumferential joints butted and longitudinal joints overlapped a minimum of 2". Adhere insulation to metal with 4" strips of insulation bonding adhesive at 8" on center. On circumferential and longitudinal joints, the 2" flange of the facing shall be secured using 9/16" flare door staples applied 6" on center and taped with 4" wide fiberglass fabricated cloth tape embedded in Foster 30-35 white vapor barrier Emulsion and covered with Foster 30-35 white vapor barrier Emulsion until the tape is completely covered. All pin penetrations or punctures in facing shall also be taped. If the project is an existing building retrofit project contractor shall seal insulation joints with foil backed tape with woven string stapled in at least two places per side, in lieu of fiberglass fabricated cloth with mastic.

C. Top of ceiling diffusers shall be insulated with 1" Insulation B, exempt if diffuser has factory installed insulation.

D. Flexible round ducts are specified in Section 15810 as factory insulated.

PART 3 - EXECUTION

3.1 DUCT DIMENSIONS INDICATED IN THE DRAWINGS ARE NET INSIDE DIMENSIONS REQUIRED FOR AIR FLOW. DUCT CONSTRUCTION SHALL INCREASE DUCT SIZE TO ALLOW FOR INSULATION THICKNESS IF NECESSARY TO MAINTAIN INDICATED FREE AREA.

3.2 EXAMINATION

A. Ductwork shall be tested as specified before applying insulation materials.

B. Verify that ductwork has been tested before applying insulation materials.

C. Verify that surfaces are clean, foreign material removed, and dry.

3.3 INSTALLATION

A. Install materials in accordance with Manufacturer's instructions.

B. Insulated ductwork conveying air below ambient temperature:
1. Provide insulation with vapor barrier jackets.
2. Finish all joints and edges of insulating material with tape and vapor barrier jacket, sealed vapor tight.
3. Continue insulation through walls, sleeves, hangers, and other duct penetrations.
4. Insulate entire system including fittings, joints, flanges, the backs of diffusers, flexible connections, and expansion joints.

C. Insulated ductwork conveying air above ambient temperature:
1. Provide with or without standard vapor barrier jacket.
2. Insulate fittings and joints. Where service access is required, bevel and seal ends of insulation.

D. External Duct Insulation Application:
1. Secure rigid (not blanket) insulation with vapor barrier with wires and seal jacket joints with vapor barrier adhesive or tape to match jacket.
2. Secure insulation without vapor barrier with staples, tape, or wires.
3. Install without sag on underside of ductwork. Use adhesive or mechanical fasteners where necessary to prevent sagging. Lift ductwork off trapeze hangers and insert spacers.
4. Seal vapor barrier penetrations by mechanical fasteners with vapor barrier adhesive.
5. Stop and point insulation around access doors and damper operators to allow operation without disturbing wrapping.

E. Duct and Plenum Liner Application:
1. Adhere insulation with adhesive for 100 percent coverage.
2. Secure insulation with mechanical liner fasteners. Refer to SMACNA Standards for spacing.
3. Seal and smooth joints.
4. Seal liner surface penetrations with adhesive.

F. All piping, equipment, ductwork, all plenums including metal and masonry construction, fans, etc., shall be insulated as indicated on the Drawings, as specified herein, and as required for a complete system. In each case, the insulation shall be equal to that specified and materials applied and finished as described in these Specifications.

G. All insulation shall be applied by mechanics skilled in this particular work and regularly engaged in such occupation. All insulation shall be applied in strict accordance with these Specifications and with factory printed recommendations on items not herein mentioned. Unsightly, inadequate, or sloppy work will not be acceptable, and all such work shall be removed and replaced to achieve an acceptable installation.

H. All insulation, jacket, adhesives, mastics, sealers, etc., utilized in the fabrication of these systems shall meet NFPA for fire resistant ratings (maximum of 25 flame spread and 50 smoke developed ratings) and shall be approved by the insulation Manufacturer for guaranteed performances when incorporated into their insulation system, unless a specific product is specified for a specific application, and is stated as an exception to this requirement. Certificates to this effect shall be submitted along with Contractor's submittal data for this section of the Specifications.

I. All surfaces to be insulated shall be clean and dry before applying the insulation. All sections of molded pipe covering shall be firmly butted together. Where an insulation covering is applied, it shall lap the adjoining section of insulation by at least three inches (3"). Where insulation terminates, it shall be neatly beveled and finished. No insulation shall be applied until the pipe, duct, etc., have been pressure tested and found tight. Piping, flexible connections, flanges, valves, strainers, and unions shall be covered unless specifically noted otherwise. Flexible connections on duct shall not be covered.

J. Where vapor barriers are required, the vapor barrier shall be on the outside. Extreme care shall be taken that the vapor barrier is unbroken. Joints, etc., shall all be sealed. Where insulation with a vapor barrier terminates, it shall be sealed off with the vapor barrier being continuous to the surface being insulated. Ends shall not be left raw.

K. Extreme care shall be taken in covering ductwork to insure the duct is not pierced with sheet metal screws or other fasteners.

L. Where canvas finish is specified, use Arabol lagging adhesive to prevent mildew in securing canvas. Do not use wheat paste. In addition, cover all canvas insulation with a fire retardant coating.

M. The handling and installation of all insulation materials shall be performed in strict accordance with the Manufacturer’s recommendations.

3.4 TOLERANCE

A. Substituted insulation materials shall provide thermal resistance at least the amount specified, or within 10 percent at normal conditions, as materials indicated.

3.5 DUCT INSULATION SCHEDULE

A. Insulation type, location and thickness shall be as indicated on the drawings.

END OF SECTION

SECTION 15210

RECIPROCATING AIR COMPRESSORS

PART 1 - GENERAL

1.1 WORK INCLUDES

A. Reciprocating air compressor

B. Air receiver and accessories

C. Pressure Reducing Valves

D. Water Air separators

1.2 RELATED WORK

A. Section 15050 – Basic Mechanical Requirements

B. Section 15060 – Anchors and Supports

C. Section 15400 – Plumbing Piping and Associated Materials

1.3 REFERENCES

A. Air receivers shall meet requirements of ASME Code for Unfired Pressure Vessels and carry ASME approval stamp.

1.4 SUBMITTALS

A. Submit Manufacturer’s drawing and data sheets for each component.

B. Submit inspector's certificate for air receiver for inclusion in Operating and Maintenance Manuals.

PART 2 - PRODUCTS

2.1 ACCEPTABLE MANUFACTURERS

A. Ingersoll-Rand

B. SpeedAire

C. Substitutions: Under provisions of Uniform General Conditions and Special Conditions, and Section 15050

2.2 TYPE

A. Provide a total packaged configuration which shall include a starter, automatic drain valve, low oil level switch, an air cooled compressor mounted on a vertical receiver tank, and all the necessary controls. Refer to equipment schedule on drawings for additional requirements.

2.3 COMPRESSOR CONSTRUCTION

A. Construct compressor unit with cast iron housing and head, heat treated forged steel or ductile iron shaft, aluminum alloy connecting rods, aluminum pistons with non-lubricated carbon rings, high-strength alloy suction and discharge valves. Statically and dynamically balance rotating parts.

B. Mount motor and compressor on one piece ribbed cast iron or welded steel base with provision for V-belt adjustment.

2.4 AIR RECEIVER

A. Provide vertical receiver tank built to ASME regulations for working pressure of 175 psi. Flange or screw inlet and outlet connections.

B. Fittings shall include adjustable pressure regulator, safety valve, pressure gage, drain cock, and automatic condensate trap.

C. Tank Finish: Hot-dipped galvanized, baked enamel, or powder coat.

2.5 PRESSURE REDUCING VALVE

A. Provide pressure reducing station(s) complete with automatic reducing valve and bypass, and low pressure side relief valve and gage.

B. Valve capacity suitable to reduce pressure from 200 psi to 30 psi to be adjustable upwards from reduced pressure.

2.6 CONTROLS

A. Pressure switch to cut out at 100 psi with minimum differential of 20 psi.

B. Dual Compressor regulation shall be through lead-lag switch with time delay relay.

PART 3 - EXECUTION

3.1 INSTALLATION (Non-portable units)

A. Install compressor unit on concrete foundation with sole plates and isolators. Level and bolt in place.

B. Make air cock and drain connection on horizontal casing.

C. Install line size gate valve and anti-return valve on compressor discharge.

D. Install replaceable cartridge type filter silencer of adequate capacity for each compressor.

E. Place shut-off valve on water inlet to aftercooler. Pipe drain to floor drain.

F. Connect condensate drains to nearest floor drain.

G. Install valved drip connections at low points of piping system.

H. Install take-offs to outlets from top of main, with shut-off valve after take-off.

I. Install compressed air couplings, 3/8 inch female speed couplers, and pressure gages where outlets are indicated.

J. Install "T" pieces instead of elbows at changes in direction of piping. Fit open end of each "T" with plug.

3.2 INSTALLATION (Portable units)

A. Install compressed air couplings, 3/8 inch female speed couplers, and pressure gages where outlets are indicated.

B. Install "T" pieces instead of elbows at changes in direction of piping. Fit open end of each "T" with plug.

3.3 PERFORMANCE

A. Compressors shall operate at scheduled air volume and pressure without oil creep, overloading, and within 10 percent of peak efficiency. Refer to drawings for equipment schedule.

END OF SECTION

SECTION 15400

PLUMBING, PIPING AND ASSOCIATED MATERIALS

PART 1 - GENERAL

1.1 SECTION INCLUDES

A. Pipe and pipe fittings

B. Valves

C. Valve Boxes

D. Unions

E. Dissimilar Metal Connections

F. Sanitary waste and vent system

G. Domestic water supply and distribution system

H. Water hammer arrestors

I. Water closets

J. Urinals

K. Lavatories

L. Sinks

M. Faucets

N. Hose bibbs

O. Electric Water Coolers

P. Electric water heater

Q. Liquid propane and natural gas supply and distribution system

R. Compressed air system

1.2 RELATED SECTIONS

A. Section 15050 – Basic Mechanical Requirements

B. Section 15060 – Supports and Anchors

C. Section 15090 – Piping Insulation

D. Section 15210 – Reciprocating Air Compressors

E. Division 16 – Electrical

1.3 REFERENCES

A. AGA – American Gas Association

B. ANSI B31.2 – Fuel Gas Piping

C. ANSI B31.4 – Liquid Petroleum Transportation Piping Systems

D. ANSI/ASHRAE 90.1 – Energy Conservation in New Building Design

E. ANSI/NFPA 70 – National Electrical Code

F. ANSI/UL 174 – Household Electric Storage Tank Water Heaters

G. ANSI/NEMA 250 – Enclosure for Electrical Equipment (1000 Volts Maximum)

H. ANSI/ASSE 1011 – Hose Connection Vacuum Breakers

I. ANSI/ASME A112.19.1 – Enameled Cast Iron Plumbing Fixtures

J. ANSI/ASME A112.19.2 – Vitreous China Plumbing Fixtures

K. ANSI/ASME A112.19.5 – Trim for Water-Closet Bowls, Tanks, and Urinals (Dimensional Standards)

L. ANSI A112.26.1 – Water Hammer Arrestors

M. ANSI B31.9 – Building Service Piping

N. ASME A112.18.1 – Finished and Rough Brass Plumbing Fixture Fittings

O. ASME B16.18 – Cast Bronze Solder-Joint Pressure fittings

P. ASME B16.22 – Wrought Copper and Bronze Solder-Joint Pressure Fittings

Q. ASME B16.26 – Cast Bronze Fittings for Flared Copper Tubes

R. ASME B16.3 – Malleable Iron Threaded Fittings

S. ASTM A47 – Ferritic Malleable Iron Castings

T. ASTM A53 – Pipe, Steel, Black and Hot-Dipped Zinc Coated, Welded and Seamless

U. ASTM A74 – No-hub Cast Iron Soil Pipe and Fittings

V. ASTM A888 – Bell and Spigot Service Weight Cast Iron Soil Pipe and Fittings

W. ASTM B32 – Solder Metal

X. ASTM B42 – Seamless Copper Pipe

Y. ASTM B43 – Seamless Red Brass Pipe

Z. ASTM B75 – Seamless Copper Tube

AA. ASTM B88 – Seamless Copper Water Tube

BB. ASTM B251 – Wrought Seamless Copper and Copper-Alloy Tube

CC. ASTM B302 – Threadless Copper Pipe (TP)

DD. ASTM C564 – Rubber Gaskets for Cast Iron Soil Pipe and Fittings

EE. ASTM D1784 – "Standard Specification for Rigid Poly (Vinyl Chloride) (PVC) Compounds and Chlorinated Poly (Vinyl Chloride) (CPVC) Compounds"

FF. ASTM D1785 – Poly (Vinyl Chloride) (PVC) Plastic Pipe, Schedules 40, 80, and 120

GG. ASTM D2466 – Poly (Vinyl Chloride) (PVC) Plastic Pipe Fittings, Schedule 40

HH. ASTM D2564 – Solvent Cements for Poly (Vinyl Chloride) (PVC) Plastic Pipe and Fittings

II. ASTM D2729 – Poly (Vinyl Chloride) (PVC) Sewer Pipe and Fittings

JJ. ASTM D2855 – Making Solvent-Cemented Joints with Poly (Vinyl Chloride) (PVC) Pipe and Fittings

KK. AWWA C651 – Disinfecting Water Mains

LL. CISPI 301 – Cast Iron Soil Pipe and Fittings for Hubless Cast Iron Sanitary Systems

MM. CISPI 310 – Joints for Hubless Cast Iron Sanitary Systems

NN. NFPA 54 – National Fuel Gas Code

OO. NFPA 58 – Liquefied Petroleum Gas Code

PP. NSF – National Sanitation Foundation

QQ. PDI WH-201 – Water Hammer Arrestors

RR. TCEQ – Texas Commission for Environmental Quality, Water System Regulations

SS. UPC – Uniform Plumbing Code, latest edition

1.4 SUBMITTALS

A. Submit under provisions of Uniform General Condition and Special Conditions, and Section 15050.

B. Product Data: Provide data on pipe materials, pipe fittings, valves, and accessories. Provide Manufacturers catalog information. Indicate valve data and ratings.

1.5 QUALITY ASSURANCE

A. Valves: Manufacturer's name and pressure rating marked on valve body.

B. Piping: Manufacturer's name and piping designations clearly stamped on all piping. Markings shall also include applicable ASTM Standard and NSF Certification.

C. Manufacturer's Installation Instructions: Indicate assembly and support requirements.

D. Perform Work in accordance with State of Texas Department of Health and Texas Commission on Environmental Quality Standards.

E. Ensure products and installation of specified products are in conformance with recommendations and requirements of the following organizations:
1. National Sanitation Foundation (NSF)
2. National Electrical Manufacturers' Association (NEMA)
3. Underwriters Laboratories (UL)

1.6 QUALIFICATIONS

A. Manufacturer: Company specializing in manufacturing the Products specified in this section with minimum three years documented experience.

B. Installer: Company specializing in performing the work of this section with minimum of three years documented experience. All work on all plumbing systems shall be performed by, or under the direct, full-time supervision of a fully qualified and licensed Master Plumber holding a current license issued by the State of Texas.

1.7 REGULATORY REQUIREMENTS

A. Perform Work in accordance with the latest editions of the Uniform Plumbing Code, and TCEQ and TDH Regulations.

B. Conform to applicable code for installation of backflow prevention devices.

C. Conform to NSF, ANSI/NFPA 54, ANSI/NFPA 58, ANSI/NFPA 70, ANSI/UL 174, and ANSI/UL 1453, as appropriate, requirements for water heaters.

1.8 DELIVERY, STORAGE, AND HANDLING

A. Deliver, store, protect and handle products to site under provisions of Section 15050.

B. Accept valves on site in shipping containers with labeling in place. Inspect for damage.

C. Provide temporary end caps and closures on valves, piping and fittings. Maintain in place until installation.

D. Protect piping systems from entry of foreign materials by completing sections of the work, temporary covers, and isolating parts of completed system.

1.1 ENVIRONMENTAL REQUIREMENTS

E. Do not install or backfill buried piping when bedding is wet or frozen.

PART 2 - PRODUCTS

2.1 MANUFACTURERS, GENERAL

A. Each type of product shall be manufactured by the same company. In other words, all lavatories, water closets and urinals shall be the products of the same Manufacturer, and all faucets and hose bibbs (except for freezeproof hose bibbs) shall be the products of the same Manufacturer.

2.2 WALL, FLOOR AND CEILING PLATES

A. Except as otherwise noted, provide C.P. (chrome plated) brass wall plates (escutcheons) around all pipes, conduits, etc., passing exposed through walls, floors, or ceilings, in all spaces except underfloor and attic spaces. Plates shall be sized to fit snugly against the outside of the pipe or against the insulation on lines which are insulated and positively secured to such pipe or insulation. All equipment closets are classified as finished areas. Round and rectangular ducts shall have closure plates (NOT chrome plated) made to fit accurately at all penetrations of walls and ceilings.

2.3 DOMESTIC WATER SUPPLY AND DISTRIBUTION SYSTEMS

A. All piping of potable domestic water from the water isolation valve up to and including all piping within the confines of building walls shall be a part of the domestic water piping system. Domestic water piping material and installation shall be as previously described and as specified in the following paragraphs.

B. Unless otherwise shown on the Drawings, all above grade (and slab) domestic water piping shall be fabricated of Type K, hard drawn, copper pipe made of deoxidized copper (99.9% pure). Type K copper pipe shall conform in every detail to ASTM Standard Specifications for COPPER WATER TUBE, Serial Designation B-88, and it shall be provided in 10 or 20 foot straight lengths.

C. Unless otherwise shown on the Drawings, all below slab domestic water piping shall be fabricated of one continuous length (without joints) of Type K, soft drawn, copper pipe made of deoxidized copper (99.9% pure). Type K copper pipe shall conform in every detail to ASTM Standard Specifications for COPPER WATER TUBE, Serial

Designation B-88. Note that if a branch must be made, then it shall be made above the slab. All tubing bends shall be made using a tubing bender designed to bend the size of pipe being bent.

D. Copper pipe may only be joined using non-lead-bearing solder, such as Dunton's 95-5 solder (95 percent tin, and 5 percent antimony) manufactured by W. M. Dunton Company, or approved equal. Silver solder consisting of 95 percent tin and 5 percent silver is the only acceptable material substitution.

E. All fittings for four inch (4") and smaller water lines shall be Streamline Solder Fittings manufactured by Streamline Pipe and Fittings Division, Mueller Brass Company, or approved equal. These wrought copper fittings shall be rigid and strong with openings machined to an accurate capillary fit for the copper pipe.

F. The hot and/or cold water supply lines to each and every fixture hereinafter specified shall be equipped with stop valves which shall be chromium plated, cartridge type.

G. All exposed piping and tubing (exceeding 1/4 inch) inside the building shall be chrome plated.

H. Care shall be exercised in fabricating plumbing lines to avoid all cross connections and to construct the piping systems in a manner which eliminates the possibility of water contamination. The piping systems have been designed in every case to avoid the possibility of reverse flow or back siphoning. Care shall be exercised in constructing plumbing lines to make certain that not only the letter, but the spirit, of these safety precautions is carried out to the fullest possible extent.

2.4 VALVES

A. No solder connected or grooved fitting valves shall be used on this project.

B. Ball valves shall be constructed with a three piece bronze body, stainless steel ball and stem, Teflon seats, packing and gasket, bronze gland follower, adjustable stuffing box, steel lever type handle, with plastic operating handle, quarter turn stops, and shall be class 150. Stem extensions shall be furnished for use in insulated lines.

C. Gate valves shall be constructed with a cast iron body, bonnet, wedge gate and handwheel, with a brass alloy stem, cast bronze seat rings, brass packing gland, and non-asbestos packing. All gate valves shall be Class 125, flanged bolted bonnet, and have a solid wedge gate.

D. Standard of Quality for Valves:

Valve Type	Valve Size		Manufacturer		
			Milwaukee	Nibco	Apollo
Ball Valve for shutoff and isolation	*4" and smaller	Domestic Hot & Cold Water Systems	BA-300S (up to 2")	T-595-Y-66	82-140-57
Gate Valve for shutoff and isolation	2" to 4" (threaded)	Water supply and distribution	------	T-617-O	------
Gate Valve for shutoff and isolation	2" to 8" (flanged)	Water supply and distribution	2885-FP	F-617-O	------
*Requires extended stem in insulated lines, and in situations noted in the drawings.					

2.5 VALVE BOXES

A. For each underground valve installed by the Contractor, where indicated in the construction plans, the Contractor shall provide and install a valve box in the location(s) shown in the plans. These valve boxes shall be designed to withstand heavy vehicular traffic and shall have a locking cast iron cover. The word "**WATER**" shall appear on each cover. Valve boxes shall be supported independently from the piping and shall not touch the piping. The boxes shall be installed so that their tops are just flush with or slightly above finished grade or paving.

2.6 UNIONS

A. Provide and install unions at appropriate points to permit removal of pipe and equipment without injury to other parts of the system. No unions will be required in welded lines or lines assembled with solder joint fittings except at equipment items, machinery items and other special pieces of apparatus. Unions in copper lines shall be Class 125 ground joint brass unions or Class 150 brass flanges if required by the mating item of equipment. Companion flanges on lines at various items of equipment, machines and pieces of apparatus shall serve as unions to permit removal of the particular items.

2.7 DISSIMILAR METAL CONNECTIONS

A. In all domestic water lines where the material of the pipe is changed from ferrous to copper or brass, a dielectric coupling shall be used at the transition. Unions connecting ferrous pipe to copper or brass pipe shall be dielectric type equal to Epco and shall meet the following requirements. All changes in piping material from ferrous to any other metal shall be installed with a dielectric union or fitting.

B. Insulated unions shall have an impervious insulation barrier capable of limiting galvanic current to one percent of the short circuit current in a corresponding bimetallic joint. When dry, the insulation barrier shall be able to withstand a 600 volt breakdown test.

2.8 SANITARY WASTE AND VENT SYSTEM

A. The sanitary waste system shall be installed as indicated on the Drawings complete with all fixtures, drains, traps and required connections. All fixtures and drains shall be properly vented and trapped. The Contractor shall complete the installation of the sanitary drainage system by making approved connections as indicated on the Drawings.

B. All sanitary waste and vent piping, unless specifically shown to the contrary, shall be service weight cast iron soil pipe conforming to ASTM Specifications A-888, hubless ("No-Hub") for eight inch (8") and smaller, each piece of pipe and each fitting shall have the Manufacturer's mark or name cast into it, from 5 feet outside the building footprint up to and including all waste and vent piping inside the building(s).

C. Clamps for no-hub piping shall conform to CISPI standard 310, and shall be 100 percent stainless steel, including the clamp body band, clamp straps, screw tighteners, and the bodies of the screw clamps. The sealing gasket shall be neoprene or EPDM rubber. All hubless clamps used in the project shall be stamped with the CISPI Approval, and shall be heavy duty with 4 bands on sizes up to 4" and 6 bands on sizes from 5" to 8". Clamps shall be "Widebody" clamps as manufactured by Tyler Pipe or approved equal.

D. At the option of the contractor, bell and spigot piping may be used for sanitary waste. The material used shall be Tyler Pipe, "Tyseal" or approved equal, conforming to ASTM standard A-74, and shall be stamped with the NSF and UL stamps. Sealing of the joints shall use neoprene gastketing materials and an adhesive lubricant such as manufactured by Black Swan, applied as recommended by the Manufacturer.

2.9 WATER HAMMER ARRESTORS

A. Acceptable Manufacturers:
   1. Wade
   2. Zurn
   3. Approved equal

B. Water hammer arrestors shall be installed as shown on the plumbing plans, extending connecting piping to above accessible ceilings or behind access panels, and shall be sized in accordance with Plumbing and Drainage Institute Standard PDI-WH201. If the latter is proposed, the Contractor shall submit a shop drawing of the complete plumbing plan, including all fixtures, and indicate the locations of all water hammer arrestors.

C. Water hammer arrestors shall be Wade Shokstops of all stainless steel construction with welded nested bellows, or approved equal.

2.10 FIXTURES, GENERAL

A. The Contractor shall provide vitreous china (unless noted otherwise) plumbing fixtures as scheduled and where indicated on the Drawings. The fixtures shall be free from mars or chips and shall be new, first quality and shall be furnished with sufficient supports in order to adequately hang each and every unit. The space between fixtures and masonry walls shall be grouted with white silicone grout. The space between fixtures and

gypboard or wood panel walls shall fit flat against the wall surface with no more than 1/16" gap.

B. Flush valves shall be as scheduled, and shall be the products of Sloan (Royal model), Zurn (Aquaflush model), or approved equal.

2.11 FITTINGS AND PIPES FOR FIXTURES

A. All faucets, fittings, supply stops and similar devices shall be of one Manufacturer unless otherwise specified. All water faucets and valve bodies shall be cast brass with a minimum copper content of 85%. They shall contain standardized interchangeable operating units (cartridges) constructed of a removable and replaceable unit containing all parts subject to wear. All water faucets shall contain an adjustable internal volume control unit. All exposed parts shall be chromium plated, unless noted otherwise.

B. All faucets, supplies, stops, and hose bibbs used in this project shall all be products of the same Manufacturer. All faucets, unless noted otherwise, shall be manufactured of solid cast brass, and have removable and repairable cartridges. All faucets shall be manufactured by Chicago Faucets or approved equal.

C. Fittings and piping shall be brass and, wherever exposed, shall be polished chrome-plated, unless noted otherwise.

D. Furnish and install all required water, waste, soil and vent connections to all plumbing fixtures, together with all fittings, supports, fastening devices, cocks, valves, traps, etc., leaving all in complete working order.

E. Supplies for all lavatories, sinks, and drinking fountains shall be loose key angle stops with 1/2" NPT female inlets and shall include wall flanges, and braided stainless steel riser hoses. All stops and riser hoses shall be installed under the sink or lavatory, and shall be accessible for use. All components shall be chrome plated, unless noted otherwise. In all cases, all piping, tubing, fittings, and faucets shall be installed using a mechanical connection, such as bull-nose, flared, flanged, or threaded fittings. Fittings requiring a friction fit using slip-on or gasketed connections are not acceptable.

2.12 LAVATORIES

A. Lavatories shall be as scheduled in the plumbing drawings.

2.13 WATER CLOSETS

A. Water closets, carriers, flush valves and seats shall be as scheduled in the plumbing drawings.

2.14 URINALS

A. Urinals, carriers and flush valves shall be as scheduled in the plumbing drawings.

2.15 HOSE BIBBS

A. Hose bibbs shall be as scheduled in the plumbing drawings. (NOTE that freezeproof hosebibbs may be of a different Manufacturer than that of the other faucets and hosebibbs.)

2.16 ELECTRIC WATER COOLER

A. Electric water cooler(s) shall be as scheduled in the plumbing drawings.

2.17 ELECTRIC WATER HEATER

A. Water heater shall be as scheduled in the drawings.

B. Heating elements of low watt density Incoloy sheathed, immersion type, designed to be individually field replaceable.

C. Water temperature control adjustable from 90°F to 160°F.

D. Water heaters shall be supplied and installed with a temperature and pressure relief (T&P) valve. A hard drawn, rigid Type K copper drain line from the T&P valve shall be installed, and shall be terminated in the location shown in the drawings, a minimum of 2" above the lowest overflow point of a sink, mop sink, or floor drain. The termination of the drain shall be installed using a 90° ell fitting, installed in the "down" position directly over the receptacle.

E. All piping connections to the water heater (except for the T&P drain line) shall include a dielectric union and an isolation valve. The cold and hot water piping above the dielectric unions shall be electrically bonded with a minimum AWG #8 solid copper wire, insulated with green insulation.

F. All water heaters shall be installed in a drain pan manufactured for that purpose, installed with a hard drawn, rigid Type K copper drain line, piped to the same location as the T&P drain line, and in the same manner described for the T&P drain line.

2.18 LIQUID PROPANE and/or NATURAL GAS DISTRIBUTION SYSTEM

A. The fuel gas system(s) shall be installed using the materials and methods as specified herein and in the following paragraphs.

B. Gas Cutoffs: Shall be as required by the Gas Company and the Uniform Plumbing Code. Where requirements differ, the higher quality or greater quantity shall govern.
   1. Main service entrance to building valve shall be a threaded iron body, lubricated plug valve as manufactured by Nordstrom, Figure 142, 200psi CWP, or approved equal.
   2. Gas cutoff valves shall be provided for each gas burning appliance. This valve shall be a lever operated, threaded brass, valve as manufactured by Conbraco Valve Company, Series 50, or approved equal.

C. Fuel Gas Piping:
1. All pipe used for the fabrication of fuel gas piping systems shall be Schedule 40 black steel pipe which conforms in every detail to Standard Specifications for WELDED AND SEAMLESS STEEL PIPE, ASTM Designation A53, Type E or S.
2. Unless otherwise specifically required, all steel pipe provided for fuel gas piping systems shall be provided with plain ends and assembled with weld fittings on all pipe 2-1/2" and larger. All piping 2" and smaller shall be threaded. No pipe smaller than 3/4" shall be used. From the emergency shutoff valve to the outlets the pipe shall be assembled with threaded fittings provided all joints are exposed or within the confines of the laboratory furniture.
3. Note that galvanized, brass, and copper piping and fittings are PROHIBITED for use in fuel gas service for this project.

D. Fittings: All threaded pattern fittings shall be Class 150 malleable iron fittings of Crane Company or Walworth Company manufacture (300 lb. for unions). Change of pipe size shall be by bell reducer. Reducing bushings are prohibited.

E. Dirt Legs: At all connections of fuel gas piping to equipment or other points of use, a dirt leg shall be provided. Each dirt leg shall be sized no smaller than the fuel gas piping to which they are connected. The dirt legs shall be installed vertically at a change in pipe direction where the leg will be lower than the connected piping, and shall be no less than 6 inches long, unless noted otherwise. The dirt legs shall be installed with a pipe cap at the bottom of the leg to facilitate cleaning of the leg.

F. Protective Coating:
1. Fuel gas piping systems installed underground shall utilize pipe which has been factory coated with Scotchkote protective resin No. 212. All materials, surface preparation, application and testing shall conform to Federal Specification L-C-530 B-Type 2, dated June 4, 1970. This coating shall be applied by A&A Coating Company, Lone Star, Texas, or approved equal.
2. Underground welded joints and fittings shall be coated with Scotchkote No. 306 epoxy resin and taped with vinyl Scotchwrap-50 brand tape. Flanged joints shall be given two coats of Koppers Company No. 300M Catalyzed Coal Tar Epoxy.
3. Under no circumstances shall any backfilling operations begin until these pipe protection operations have been completed, tested, and inspected.

2.19 COMPRESSED AIR DISTRIBUTION SYSTEM

A. All pipe used for the fabrication of compressed air piping systems shall be Schedule 40 galvanized steel pipe which conforms in every detail to Standard Specifications for WELDED AND SEAMLESS STEEL PIPE, ASTM Designation A53, Type E or S. Unless otherwise specifically required, all galvanized steel pipe provided for compressed air piping systems shall be provided with threaded ends and assembled with flanged fittings on all pipe 2-1/2" and larger. All piping 2" and smaller shall be threaded. No pipe smaller than 3/4" shall be used. From the shutoff valve to the outlets the pipe shall be assembled with threaded fittings.

B. Air Cutoffs shall be installed at the compressor discharge (or connection, for portable compressors), and at each point of use. Where requirements differ, the greater quality or quantity shall govern. The cutoff shall consist of a ball valve, and the operation of the handle shall not interfere with use of the tap, or the operation of the equipment. In most cases the ball valve shall be installed in a vertical position.

C. All points of use not shown in the drawings to be connected directly to equipment shall be installed not only with an "air cutoff" as described above, but also a quick disconnect air connection.

D. All threaded pattern fittings shall be Class 150 galvanized malleable iron fittings equivalent to those manufactured by Crane Company or Walworth Company (300 lb. for unions). Change of pipe size shall be by bell reducer. Reducing bushings are prohibited.

E. At all taps or connections of compressed air supply piping to equipment or other points of use shall be made in the vertical upward direction. This is intended to allow for the draining of water or condensation away from the point of use.

PART 3 - EXECUTION

3.1 EXAMINATION

A. Verify that walls and floor finishes are prepared and ready for installation of fixtures.

3.2 PREPARATION

A. Ream pipe and tube ends. Remove burrs. Bevel plain end ferrous pipe.

B. Remove scale and dirt, on inside and outside, before assembly.

C. Prepare piping connections to equipment with flanges or unions.

D. Coordinate cutting and forming of floor construction to receive plumbing fixture rough-ins to required elevations.

E. Rough-in fixture piping connections in accordance with minimum sizes indicated in fixture rough-in schedule for particular fixtures.

3.3 INSTALLATION

A. Provide non-conducting dielectric connections wherever joining piping of dissimilar metals. All such fittings and/or unions shall comply with the requirements listed in Part 2 of this section, as well as any special requirements listed in the drawings.

B. Install isolation valves and unions at each piece of equipment, such as water heater, etc., and in such a manner to allow for ease of removal of the equipment.

C. Route piping in an orderly manner and maintain gradient.

D. Install piping to conserve building space and not interfere with use of space. All piping shall be installed against the building construction, and shall not be installed in such a manner to interfere with the free movement of personnel within the space. Installation of piping shall not interfere with the ability of personnel to service and maintain equipment and systems within the space.

E. Group piping whenever practical at common elevations.

F. Install piping to allow for expansion and contraction without stressing pipe, joints, or connected equipment.

G. Provide clearance for installation of insulation and access to valves and fittings.

H. Provide access where water hammer arrestors, valves and fittings are not exposed. Coordinate access door location with architectural features.

I. Establish elevations of buried piping outside the building to ensure a minimum of cover. Refer to details, if any, in the drawings.

J. Install valves with stems upright or horizontal, not inverted.

K. Threaded piping shall have pipe dope applied to the threads of the piping prior to assembly. The acceptable pipe dope shall be graphite or Teflon based paste (no lead solder is allowed in any part of this project) or a minimum of three layers of Teflon tape. Note that it is not acceptable to use excessive amounts of pipe dope to seal leaky pipe fittings, nor is it acceptable to use materials other than acceptable pipe dope materials to seal pipe fittings.

L. Install in accordance with Manufacturer's instructions.

M. Extend cleanouts to finished floor or wall surface. Lubricate threaded cleanout plugs with a mixture of graphite and linseed oil. Ensure clearance at cleanout for rodding of drainage system.

N. Install water hammer arrestors complete with accessible isolation valve.

O. Lead: It is forbidden that lead in any form be used in any water system other than waste. If lead is used in the fabrication or installation of any water system other than waste, then ALL of the installed equipment and material, which may have come in contact with the lead, shall be marked with bright red or orange spray paint, and shall be removed from the project site. The system(s) shall then be restored and reinstalled using ALL NEW MATERIALS.

P. Furnish and install all labor, materials, equipment, tools and services and perform all operations required in connection with or properly incidental to the installation of complete plumbing fixtures, as indicated on the Drawings, reasonably implied therefrom, or as specified herein, unless specifically excluded.

Q. Plumbing fixtures shall be supplied, set and connected as listed herein and as shown on the Drawings. Fixtures shall be protected from damage during construction, and shall be thoroughly cleaned of all tape and adhesives prior to final acceptance.

R. Coordinate special mounting heights of plumbing fixtures with architectural details of each toilet area.

S. Install each fixture with trap, easily removable for servicing and cleaning. The installation of multiple traps in-line is prohibited.

T. Install components level and plumb, except for piping requiring a slope.

U. Install and secure all fixtures in place with specified wall carriers and bolts.

V. Solidly attach floor mounted water closets to floor with lag screws. Flashing is not intended to hold fixture in place. Wall mounted water closets shall be mounted securely to carrier with long studs, washers and nuts.

W. Install ADA (mobility impaired accessible) water closets with flush valve operating handle, or pushbutton, oriented toward the latch side of the partition door, or toward the more open side of the water closet enclosure, whichever is more accessible for operation.

X. Install water heaters per Manufacturer's instructions and as detailed on drawings. Set initial temperature at 110°F.

3.4 ERECTION TOLERANCES

A. Establish invert elevations, slopes for drainage to 1/8 inch per foot (one percent) minimum for all piping systems except for waste water piping. Install waste water piping with 1/4 inch per foot (two percent) minimum gradient. Maintain gradients through each joint of pipe and throughout system. All other dimensions shall be installed within 1/4 inch, unless noted otherwise.

3.5 ALLOWABLE BENDS

A. Unless specifically allowed in the pipe Manufacturer's design criteria, deflections of the pipe will not be allowed at couplings. An allowable radius for pipe sections may be determined from the pipe Manufacturer, and shall be submitted for approval by the Owner prior to installation.

B. Bends in soft drawn copper piping shall be made using a tubing bender designed for the purpose of bending the size of pipe being installed.

3.6 DOMESTIC WATER PIPING SYSTEMS

A. All piping shall have reducing fittings used for reducing or increasing where any change in the pipe sizes occurs. No bushing of any nature shall be allowed in any piping.

B. All exposed chrome plated, polished or enameled connections from fixtures shall be installed with special care, showing no tool marks or threads at fittings, and supported where appropriate by neat racks or hangers with round head screws of same material and finish.

C. Wade Shokstop, or approved equal, sealed air chambers shall be provided in all water branches to fixtures, sized in accordance with Manufacturer's recommendations, concealed, accessible, and located so as to protect each group of plumbing fixtures. Equal products of other Manufacturers will be considered for approval.

D. The fabrication of copper pipe and fittings shall in every detail conform to the recommendations and instructions of the fitting Manufacturer. The tools used shall be the tools adapted to that specific purpose.

E. Piping to flush valves shall be firmly secured to prevent movement when operating the valves.

F. Refer to other parts of this Section for other information concerning installation of piping.

3.7 TESTING OF ALL POTABLE WATER SYSTEMS

A. All water piping systems shall be tested. In the event a piping system is to be insulated or concealed, the piping system shall be flushed and these tests shall be satisfactorily completed before any insulation is applied or the piping system is concealed. Buried piping systems shall be flushed, tested and disinfected prior to the backfill and covering of any of the piping. In the event that the trenches are backfilled prior to the witnessed (by the Owners Construction Inspector, or designate) completion of the testing, flushing and sterilization of the piping system, then the Contractor shall expose the piping and discard all backfill materials in an acceptable manner, and complete the specified procedure. The backfill of the piping trenches shall then be completed as specified.

B. The procedure of these tests shall consist of subjecting a piping system to the hydrostatic pressure listed at the end of this Section, (or 150 percent of maximum working pressure, if a working pressure is specified, whichever is less) for the period indicated in the table. During this test period, all pipe, fittings and accessories in the particular piping system which is being tested shall be carefully inspected. If leaks are detected, such leaks shall be stopped by means designated by the Owner's duly authorized representative and the hydrostatic test shall again be applied. This procedure shall be repeated until, for the entire test period, no leaks can be found while the system being tested is subjected to the pressure mentioned above. Note that the "detection of leaks" shall include a drop in test pressure of 5 pounds per square inch (a minimum of 3 percent of test pressure) or more.

C. Wherever conditions permit, each piping system shall thereafter be subjected to its normal operating pressure and temperature for a period of no less than five (5) days. During that period, it shall be carefully observed. The piping systems must demonstrate the propriety of their installation by remaining absolutely tight and without leaks during this period.

3.8 DISINFECTION OF DOMESTIC WATER PIPING SYSTEM

A. Water for flushing, testing, and disinfection of potable domestic water piping systems will be furnished by the Contractor. The Contractor shall furnish all labor, equipment, and materials necessary to complete the system disinfection procedures specified herein.

B. Prior to starting work, verify system is complete, tested, flushed and clean.

C. Ensure pH of water to be treated is between 7.4 and 7.6 by adding alkali (caustic soda or soda ash) or acid (hydrochloric).

D. Inject disinfectant (liquid chlorine conforming with U.S. Army Specification No. 4-1, calcium hypochlorite, or chlorinated lime conforming with the requirements of Federal Specification O-C-114), throughout system to obtain 50 to 80 mg/L residual Chlorine at all outlets or taps.

E. Bleed water from outlets to ensure distribution and test for disinfectant residual at a minimum of 15 percent of outlets.

F. Maintain disinfectant in system for 24 hours.

G. If final disinfectant residual tests less than 25 mg/L residual Chlorine, repeat treatment.

H. Flush disinfectant from system until the residual Chlorine is equal to that of incoming water or a maximum of 1.0 mg/L.

I. Take samples no sooner than 24 hours after flushing, from a minimum of 10 percent of outlets and from water entry, and analyze in accordance with AWWA C651.

J. The sterilization process shall be conducted as required by the Health Department of the local county, and the specifications above, and upon completion of the process, the Contractor shall contact the Health Department to test and certify the cleanliness of the water piping system. The Contractor shall pay all costs and charges, if any, incidental to this test and certification as a part of this project.

3.9 INSTALLATION OF SANITARY WASTE PIPING

A. Install in strict accordance with Manufacturer’s recommendations.

B. Lubricate cleanout plugs with mixture of graphite and linseed oil. Prior to substantial completion remove cleanout plugs, relubricate and reinstall using only enough force to ensure a leakproof joint.

C. Slope drainage lines minimum 1/4” per foot, 1/2” per foot maximum for waste lines.

D. Install exterior cleanouts at grade and set in concrete pad as detailed on drawings.

E. Flush piping clean with water after installation.

3.10 FABRICATION METHODS FOR SEWAGE AND DRAINAGE PIPE LINES

A. Complete the installation of all sewer drains and piping promptly after excavating, chasing or cutting for same has been done so as to keep the openings for such piping open as short a time as possible. No piping shall, however, be permanently closed up, furred in or covered before the testing and inspection of same by the authority(ies) having jurisdiction.

B. Waste pipes shall be sized to conform to the sizes indicated on the Drawings. Under no circumstances shall any drain line be smaller than two inches. The waste pipes from water closets shall not be smaller than four inches.

C. The drilling and tapping of soil or waste lines is prohibited.

D. Vent pipes shall be of same material as drainage piping.

E. All vent lines shall be so constructed that they cannot be used for waste or soil lines.

F. No fixture shall be double trapped.

G. All connections for wall mounted water closets and waste piping shall be made with an appropriate cast iron closet carrier and seal as recommended by the carrier Manufacturer.

3.11 TESTING SANITARY WASTE SYSTEMS

A. After the vertical lines of soil pipe, waste, and other parts of the sanitary system have been set, all outlets shall be temporarily “plugged up”, except as are required for testing as described herein. The piping shall be tested to the pressure and time listed in the table at the end of this section. The pipes shall be filled with water to a verifiable and visible level as described above and be allowed to remain so for the test period indicated in the table at the end of this section. If, end of the test period, the level of the water has been lowered by leakage, the leaks shall be found and repaired, and the water level shall again be raised to the level described, and the test repeated until, after the test period, there shall be no perceptible lowering of the water level in the system being tested.

B. Should the completion of these tests leave any reasonable doubt relative to the integrity of the installation, additional tests or measures shall be performed to demonstrate the reliability of these systems to the complete satisfaction of the Owner’s duly authorized representative. Such tests shall be conducted and completed before any joints in plumbing are concealed or made inaccessible.

C. After all testing operations have been completed, all waste and vent lines shall be flushed with clean water.

3.12 INTERFACE WITH OTHER PRODUCTS

A. Review millwork shop drawings. Confirm location and size of fixtures and openings before rough-in and installation.

3.13 ADJUSTING

A. Adjust work under provisions of Section 15050.

B. Adjust stops or valves for intended water flow rate to fixtures without splashing, noise, or overflow.

3.14 CLEANING

A. Clean work under provisions of Section 15050.

B. At completion clean plumbing fixtures and equipment.

3.15 PROTECTION OF FINISHED WORK

A. Protect finished Work under provisions of Section 15050.

B. Do not permit any use of fixtures during construction, until after Substantial Completion has been announced by Owner.

3.16 FIXTURE HEIGHTS (All heights are "above finished floor" unless noted otherwise. All heights listed shall be used, unless noted otherwise in 1) Architectural, or 2) Plumbing, Plans.)

A. Tolerances: Note that all heights listed herein are intended to allow a tolerance of ±1/2", unless a specific range is given.

B. Water-Closet
1. Standard: nominal 14 inches to top of bowl rim
2. Accessible: 17 to 19 inches to top of installed elevation of seat.

C. Urinal
1. Standard: 25 inches to bowl rim
2. Accessible: 17 inches to bowl rim, and shall project a minimum of 14 inches from wall.

D. Lavatory (All installations): 32 inches to top of basin rim.

E. Hose Bibb (All installations): 18 inches A.F.F. (above final grade, if no floor) to center of outlet of hose bibb.

3.17 FUEL GAS DISTRIBUTION SYSTEM FABRICATION METHODS

A. All interior fuel gas piping shall, wherever possible, be installed so as to grade back toward the building entrance.

B. All piping shall be securely fastened in place in such a manner as to maintain its grading. Under no circumstances shall any gas piping be used to support any weight other than its own weight.

C. The general arrangement of all fuel gas piping shall be such that the number of threaded joints involved is reduced to an absolute minimum. If obstructions are encountered, pipe shall not be bent to avoid such obstructions. Welding fittings shall be used for this purpose in the case of welded lines, and if threaded lines are involved, threaded fittings shall be used. Wherever fuel gas pipes run through outside brick, stone, or other walls, the opening around the pipe shall be securely and rigidly sealed with a resilient seal. Fuel gas pipe sizes shall be at least one pipe size larger than the inlet of the gas appliance which they supply. No bushings shall be used in the installation of the system. If pipe sizes must be changed, then only bell reducers may be used.

D. Fuel gas piping shall be thoroughly tested after installation. The procedure of these tests shall consist of subjecting a piping system to a pneumatic (air) pressure as listed in the table at the end of this section. The length of the test shall be as given in the table. During this test period, all pipe, fittings and accessories in the piping system which is being tested shall be carefully inspected with a soapy leak testing fluid. If leaks are detected, such leaks shall be stopped by means designated by the Owner's duly authorized representative and the test shall again be applied. This procedure shall be repeated until, for an entire twenty-four hour period, no leaks can be found while the system being tested is subjected to the pressure mentioned above. Note that the "detection of leaks" shall include a drop in test pressure of 5 pounds per square inch or more.

3.18 COMPRESSED AIR DISTRIBUTION SYSTEM FABRICATION METHODS

A. All interior compressed air piping shall, wherever possible, be installed so as to grade back toward the compressed air tank.

B. All air piping shall be securely fastened in place in such a manner as to maintain its grading. Under no circumstances shall any piping be used to support any weight other than its own weight.

C. The general arrangement of all air piping shall be such that the number of joints installed is reduced to an absolute minimum. If obstructions are encountered, pipe shall not be bent to avoid such obstructions. Welding fittings shall be used for this purpose in the case of welded lines, and if threaded lines are involved, screwed fittings shall be used. Wherever pipes run through exterior brick, stone, or other walls, the opening around the pipe shall be securely and rigidly sealed. No bushings shall be used in the installation of the system. If pipe sizes must be changed, then only bell reducers may be used.

D. Compressed air piping shall be thoroughly tested after installation. The procedure of these tests shall consist of subjecting a piping system to the pneumatic (air) pressure indicated in the table at the end of this Section for the test period indicated. During this test period, all pipe, fittings and accessories in the particular piping system which is being tested shall be carefully inspected. If leaks are detected, such leaks shall be stopped by means designated by the Owner's duly authorized representative and the test shall again be applied. This procedure shall be repeated until, for an entire twenty-four hour period, no leaks can be found while the system being tested is subjected to the pressure mentioned above. Note that the "detection of leaks" shall include a drop in test pressure

of 5 pounds per square inch or more. If there is a significant change in ambient temperature from the beginning to the end of the test, then this shall be considered if there is a significant drop in pressure. At the discretion of the State's representative, the test may be repeated.

E. Wherever conditions permit, the piping system shall thereafter be subjected to its normal operating pressure and temperature for a period of no less than five (5) days. During that period, it shall be carefully observed. The piping systems must demonstrate the propriety of their installation by remaining absolutely tight and without leaks during this period.

3.19 TESTING

A. All piping systems shall be tested at pressures appropriate to their service. The following test pressures and periods of test shall be used, unless noted otherwise. If lesser pressures or test periods are specified, then the pressures and periods listed below shall prevail:

Piping System	Test Pressure	Test Period
Water	100 psig	1 hour
Sanitary Sewer & Vent	10 ft of head	1 hour
Fuel Gas	10 psig	1 hour
Compressed Air	150 psig	1 hour

END OF SECTION

SECTION 15490
CLOSED LOOP WATER RECYCLING SYSTEM

PART 1 - GENERAL

1.1 SECTION INCLUDES

A. Closed Loop Water Recirculation System

B. Pressure Washer

1.2 RELATED SECTIONS

A. Section 15010 – Basic Mechanical Requirements

B. Section 15140 – Supports and Anchors

C. Section 15260 – Piping Insulation.

D. Section 15400 – Plumbing Piping and Associated Materials

E. Division 16 – Electrical.

1.3 REFERENCES

A. ANSI/NFPA 70 – National Electrical Code

B. ANSI B31.9 – Building Service Piping

C. ASTM A53 – Pipe, Steel, Black and Hot-Dipped Zinc Coated, Welded and Seamless

D. ASTM B32 – Solder Metal

E. ASTM B42 – Seamless Copper Pipe

F. ASTM B43 – Seamless Red Brass Pipe

G. ASTM B75 – Seamless Copper Tube

H. ASTM B88 – Seamless Copper Water Tube

I. ASTM B251 – Wrought Seamless Copper and Copper-Alloy Tube

J. ASTM B302 – Threadless Copper Pipe (TP)

K. ASTM D1784 – “Standard Specification for Rigid Poly (Vinyl Chloride) (PVC) Compounds and Chlorinated Poly (Vinyl Chloride) (CPVC) Compounds."

L. ASTM D1785 – Poly (Vinyl Chloride) (PVC) Plastic Pipe, Schedules 40, 80, and 120.

M. ASTM D2466 – Poly (Vinyl Chloride) (PVC) Plastic Pipe Fittings, Schedule 40.

N. ASTM D2564 – Solvent Cements for Poly (Vinyl Chloride) (PVC) Plastic Pipe and Fittings.

O. ASTM D2729 – Poly (Vinyl Chloride) (PVC) Sewer Pipe and Fittings.

P. ASTM D2855 – Making Solvent-Cemented Joints with Poly (Vinyl Chloride) (PVC) Pipe and Fittings.

Q. NSF – National Sanitation Foundation

R. TCEQ – Texas Commission for Environmental Quality, Water System Regulations

S. TDH – Texas Department of Health

T. IBC – International Building Code, latest edition

U. UMC – Uniform Mechanical Code, latest edition

V. UPC – Uniform Plumbing Code, latest edition

1.4 SUBMITTALS

A. Submit under provisions of UGC and Special Conditions.

B. Product Data: Provide data on capacities, ratings, manufacturer's recommended clearances, dimensions, and construction. Provide manufacturers catalog information on all components and their operation and maintenance.

1.5 QUALITY ASSURANCE

A. Manufacturer's Installation Instructions: Indicate assembly and support requirements.

B. Ensure products and installation of specified products are in conformance with recommendations and requirements of the following organizations:

1. National Electrical Manufacturers' Association (NEMA).
2. National Sanitation Foundation (NSF).
3. Underwriters Laboratories (UL).

1.6 QUALIFICATIONS

A. Manufacturer: Company specializing in manufacturing the Products specified in this section with minimum three years documented experience.

B. Installer: Shall be certified and approved for marketing, installation and servicing of the system by the system manufacturer. Documentation of this certification shall be submitted for approval.

1.7 REGULATORY REQUIREMENTS

A. Perform Work in accordance with the following: Uniform Plumbing Code, Uniform Mechanical Code, TCEQ and TDH Regulations.

1.8 DELIVERY, STORAGE, AND HANDLING

A. Deliver, store, protect and handle products to site under provisions of Section 15010.

B. Provide temporary end caps and closures on all piping and fittings. Maintain in place until installation.

1.9 WARRANTY

A. Contractor shall provide one-year warranty on all materials and workmanship, including a monthly onsite check of the operation of the system.

1.10 SUPPLY OF CONSUMABLES

A. Contractor shall provide a one year supply of all consumables, provided on a monthly basis beginning with the date of project substantial completion.

PART 2 - PRODUCTS

2.1 WATER RECYCLING SYSTEM, GENERAL

A. Equipment capacities and options shall be as scheduled, or as specified herein, whichever is greater.

B. In some cases it may not be possible to describe in adequate detail the exact installation of a feature or equipment. In those instances, the Contractor shall solicit the guidance and direction of the Engineer, whose decision will be final.

C. The system as installed shall be complete in every respect, ready for operation at the completion of the installation.

D. System as installed shall be weather tight, capable of reliable operation without the need for a weather proof enclosure. All protection required for system components shall be included in the construction of the system.

E. Complete system shall not exceed a footprint of 24 feet by 16 feet and shall not exceed a height of 10 feet, unless a larger size is approved.

F. The system shall include the aeration of the Washbay separation pit using an air pump.

G. The system shall include a compressor for control air as well as any other system air requirements that are necessary for a complete and operational plant.

H. All water piping shall be schedule 80 PVC and shall be installed in a neat and organized manner, secured to the floor using Unistrut and pipe clamps.

2.2 WATER RECYCLING SYSTEM MANUFACTURER

A. Water Maze Water Treatment Systems

B. Approved equal.

2.3 CAPACITY

A. Unit shall have the ability to process a minimum of 5 gallons of untreated water per minute, and process water with an oil content of up to 5 percent and total suspended solids (TSS) of 10,000ppm (1%).

2.4 WATER TREATMENT

A. Unit shall include an oil and grease separator, and a sediment separator. Separation may be performed in a single unit.

B. System shall include a process of adding bioremediation material to the water as a means of

purifying the recirculated water. The bioremediation materials shall be intrinsically safe and shall not require special handling.

C. The system shall include the ability to aerate the water in the washbay collection pit, in addition to providing aeration for the process.

D. The final water shall be treated with ozone to reduce and eliminate the carryover of any bioremediation materials.

E. All internal and external parts shall be resistant to corrosion.

F. Separator shall have the capability to place the waste oil and grease in an owner provided 55 gallon drum.

G. Separator shall have continuous solids separation and filtration system(s).

2.5 WATER FILTRATION

A. Water submitted for reuse shall contain no greater than 50 micron particle size of solids. System may automatically purge solids to the washbay separation pit.

2.6 WATER STORAGE

A. System shall include a minimum of 500 gallons of water storage capacity to allow for surges in water flow. Storage tank shall include a drain valve and hose for draining stored water.

2.7 PUMPS

A. System shall include the ability to pump raw water from a 5 foot deep sump (indicated in the drawings).

B. System shall include all pumping capacity required by the system for supply of stored water to the specified pressure water at maximum required flow capacity.

2.8 COMPRESSED AND AERATION AIR

A. The system shall include an air compressor to supply control air for the system. The compressor shall be commercial quality, capable of continuous as well as repeated start/stop operation.

B. The system shall include an air pump or compressor capable of supplying air to the system and to the washbay collection pit for aeration, including all necessary piping, hoses and air dispersion devices.

C. The compressed air and aeration air requirements may be combined into one large air compressor capable of a minimum continuous 9 cfm supply of compressed air at 90 psig. If one compressor is supplied, then it shall be a minimum 3 horsepower, vertical unit, with a minimum 60 gallon tank. Electrical voltage rating shall be 240V, 1-phase, 60 hertz.

2.9 BLOWDOWN SYSTEM

A. The system shall include automatic controls and piping to blow down an adjustable amount of processed water. The purpose of the blow down shall be to limit the amount of contaminants in the recycled water. The water shall flow to a drain provided in the equipment room.

B. The system shall include automatic controls and piping to blow down an adjustable amount of processed water. The purpose of the blow down shall be to limit the amount of contaminants building in the recycled water. The water shall flow to a water evaporator.

2.10 WATER EVAPORATOR

A. The wastewater evaporator shall have a capacity of 10 to 15 gallons per hour. The fuel source shall be diesel at a rate of 200,000 BTU per hour and have a power requirement of 8 amps, 120 volt AC.

B. The unit has a tank capacity of 70 gallons, requires 4 cfm of compressed air, and has a 6" stainless steel stack that shall be extended through the roof with a type "L" vent and terminated with a weatherproof cap.

C. The following options shall be included.
1. Stainless steel evaporation tank.
2. Automatic fill.

2.11 OPERATING CONTROLS

A. The turnkey system shall include complete controls for the automatic operation of all components to operate as an integrated system. Controls shall be analog, and shall require no special programming. A control panel shall be included, and shall have the following features as a minimum:

1. Selective switches for manual and automatic pump operation, as well as an "off" position ("H-O-A" switches).
2. Yellow and red indicator lights for low and high level alarms for all open vessels and basins.
3. Complete labeling with easily understood descriptions for all features.
4. Automatic operation with no operator intervention required.
5. A complete schematic for operation and troubleshooting.

2.12 WATER RECYCLING SYSTEM POWER REQUIREMENTS

A. Refer to recycle equipment schedules. If an alternate manufacturer and system are accepted, the contractor shall provide properly sized and protected circuits necessary to power the equipment provided.

B. System shall include all NEC required electrical protection for each powered device.

2.13 PRESSURE WASHER

A. A pressure washer shall be provided under this contract. The pressure washer shall comply with the following.

B. Manufacturer:

1. Alkota Model # 418X4 (208/230V, 1ph)
2. Landa Model #HOT4-20024G (208V, 1ph)

3. Hotsy Model # 950SS-208 (208V, 1ph)

4. approved equal.

C. The unit shall have a factory manufactured water heater and integral pressure booster. The water heater shall heat the water to a minimum of 100°F (adjustable), using diesel oil for fuel, minimum 12 gallon fuel tank.

D. A 5.0 horsepower pressure booster pump shall increase the water pressure to a minimum pressure of 1800 psig. Water flow shall be minimum 4.0 gpm.

E. The system shall include a minimum of 70 feet (unless noted otherwise on drawings) of pressure rated hose rated for an operating pressure of 3000 psig, a trigger operated wash "wand" and atomizing pressure nozzle.

F. The system shall include a chemical feeder for the precise blending of detergents.

G. Refer to equipment schedule on drawings for additional requirements, if any.

2.14 WARRANTY

A. The Contractor shall provide an unconditional one year warranty from the date of substantial completion that shall include monthly inspections, complete parts and labor for all equipment or material failures, complete supply of consumables provided on a monthly basis delivered to the site.

PART 3 - EXECUTION

3.1 INSTALLATION

A. Manufacturer trained and certified technicians shall install the system according to manufacturers written instructions.

B. Install and connect all power and piping as required by manufacturers written instructions.

C. As part of the requirements shown here and in the plans, Contractor shall coordinate trades to minimize interference with the installation and placement of the system. Contractor shall install the system in the location indicated on plans. If Contractor has any question concerning the installation as indicated here or in the drawings, the Contractor shall seek the advice and guidance of the Owner's Construction Inspector and/or Engineer. The decision of the Engineer shall be final.

3.2 COMMISSIONING

A. Startup Services shall be provided to start and demonstrate units, and operate controls and safeties.

B. Test and Adjust controls and safeties, replace damaged or malfunctioning controls and equipment.

C. Correct deficiencies identified by test and observations and retest until specified requirements are met.

3.3 TRAINING

A. A manufacturer trained and certified technician shall provide a minimum of four (4) hours training in the operation and maintenance of the system to no less than four (4) of the Owner's

personnel. Contractor shall give a minimum of one week notice when preparing to provide the training.

B. Complete descriptive training material shall be provided for each of the Owner's personnel trained. The training material shall include, as a minimum, the following:
   1. a complete description of the operation of each of the system's components,
   2. how each component operates with the system,
   3. how the controls work and how to adjust each control,
   4. suggested troubleshooting for expected malfunctions,
   5. required maintenance,
   6. a complete maintenance schedule for all serviceable components,
   7. a complete parts list, and
   8. methods of repair.

3.4 OPERATION AND MAINTENANCE

A. The final installation shall be complete and functional in every respect. The equipment shall perform as specified, and all features of every piece of equipment installed under this contract shall be accessible for operation and maintenance. In addition, the installation of the materials or equipment for this project shall provide access for all features for the operation and maintenance of related or adjacent equipment to the materials and equipment installed under this project. Contractor shall install all equipment and materials as specified so that all equipment is completely accessible for such maintenance and operation as changing filters, replacing motors, oiling bearings, inspecting and repairing controls, etc.

B. All necessary MSDS shall be included with all material supplied to the owner at the completion of the project, including training manuals and operation and maintenance manuals.

END OF SECTION

SECTION 15540

FUEL FIRED HEATERS

PART 1 - GENERAL

1.1 SECTION INCLUDES

A. Low Intensity Tube Infrared Heaters

B. High Intensity Ceramic Burner Infrared Heaters

C. Point of use Pressure Regulators

1.2 RELATED SECTIONS

A. Section 15050 – Basic Mechanical Requirements

B. Section 15060 – Supports and Anchors

C. Section 15400 – Plumbing Piping and Associated Materials

1.3 REFERENCES

A. AGA – American Gas Association

B. ANSI/ASHRAE 90A – Energy Conservation in New Building Design

C. NFPA 54 – National Fuel Gas Code

D. UMC – Uniform Mechanical Code, latest edition

E. UPC – Uniform Plumbing Code, latest edition

1.4 SUBMITTALS

A. Submit under provisions of Uniform General Conditions, Special General Conditions, and Section 15050.

B. Product Data: Provide data on infrared heaters, input ratings, Manufacturer's recommended clearances, dimensions, tube size and construction. Provide Manufacturers catalog information on indoor and outdoor thermostats, connections to emitter tubes for single and double venting combustible product as well as combustible air.

1.5 QUALITY ASSURANCE

A. Radiant Heaters: Manufacturer's name, American Gas Association label, and input rating clearly shown on burner housing.

B. Thermostats: Manufacturer's name and the (UL) label and NEMA classification clearly shown on thermostats and radiant heaters.

C. Manufacturer's Installation Instructions: Indicate assembly and support requirements.

D. Ensure products and installation of specified products are in conformance with recommendations and requirements of the following organizations:
   1. National Electrical Manufacturers' Association (NEMA)
   2. Underwriters Laboratories (UL)
   3. AGA – American Gas Association
   4. ANSI B31.2 – Fuel Gas Piping Code
   5. ANSI Z83.6 – Gas-Fired Infrared Heaters

1.6 QUALIFICATIONS

A. Manufacturer: Company specializing in manufacturing the Products specified in this section with minimum three years documented experience.

1.7 REGULATORY REQUIREMENTS

A. Perform Work in accordance with the following: Uniform Plumbing Code, Uniform Mechanical Code, National Fuel Gas Code (NFPA-54), TNRCC and TDH Regulations.

1.8 DELIVERY, STORAGE, AND HANDLING

A. Deliver, store, protect and handle products to site under provisions of Section 15050.

B. Accept valves on site in shipping containers with labeling in place. Inspect for damage.

C. Provide temporary end caps and closures on piping and fittings. Maintain in place until installation.

D. Protect the emitter tubes and the ceramic burners from entry of foreign materials by use of temporary covers, completing sections of the work, and isolating parts of completed system.

1.9 WARRANTY

A. Contractor shall provide one-year warranty on all materials and workmanship, a Manufacturer five-year warranty on tube heater’s combustion and radiant emitter tube assembly and a 10-year warranty on the ceramic burners.

PART 2 - PRODUCTS

2.1 GENERAL

A. Equipment capacities and options shall be as scheduled, or as specified herein, whichever is greater.

B. In some cases it may not be possible to describe in adequate detail the exact installation of a feature or equipment. In those instances, the Contractor shall solicit the guidance and direction of the Owners Construction Inspector, whose decision will be final.

2.2 MANUFACTURER (Note: all low and high intensity infrared heaters, thermostats, dual exhaust assemblies and elbow 90° bends shall be products of the same Manufacturer):

A. Re-verber-ray, Model DX and DR Series heaters as indicated in drawings

B. Ray-Tec

C. Approved equal

2.3 GAS-FIRED TUBULAR INFRARED HEATERS

A. Comply with ANSI Z83.6, “Gas-Fired Infrared Heaters”.

B. Certified label by American Gas Association.

C. Certified label by Underwriters' Laboratories.

D. Designed and built to burn liquid propane gas with characteristics same as those of gas available at Project site.

E. Factory assembled, piped, wired, and tested for 120 VAC.

F. Stainless steel or aluminized steel with high-emissivity, high-temperature, corrosion-resistant external finish.

G. Heater shall be equipped with a direct silicon carbide ignition system, two safety differential pressure switches, pre-purge feature before initiating burner operation and a burner sight glass visible from the floor of the occupied space.

H. Reflectors shall be polished stainless steel or aluminum, with reflector end caps, capable of rotating from 0 to 45 degrees when required.

I. As indicated in plans install a dual exhaust assembly “Y” shaped aluminized steel with high temperature coating connecting to a 6 inch Type “B” vent with both heaters on a common thermostat.

2.4 OPERATING CONTROLS (“Thermostat”)

A. External thermostats shown in schedule.

PART 3 - EXECUTION

3.1 INSTALLATION

A. Install heaters according to Manufacturer’s written instructions.

B. Install and connect gas-fired heaters and associated fuel and vent features and systems, installed and connected according to NFPA-54, applicable local codes and regulations, and Manufacturer's printed installation instructions.

C. Where indicated in plans install a dual exhaust assembly "Y" shaped aluminized steel with high temperature coating connecting to a 6 inch Type "B" vent, heaters shall be controlled with a common thermostat.

D. All tube heaters shall have an outside combustible air intake vent (PVC 4-inch vent). Provide insect screen on inlet.

E. As part of the requirements shown here and in the plans, Contractor will be required to coordinate trades to minimize interference with the installation and placement of the radiant heaters. Contractor is required to install the radiant heaters where indicated on plans. If Contractor feels the placement of the radiant heaters is not achievable due to interference, combustible clearances, safety issues or possible hazards, he or she shall seek advice and guidance through the Owner's Construction Inspector and/or Engineer whose decision shall be final.

3.2 ADJUSTING AND CLEANING

A. Adjust natural gas pressure reducing regulators for optimum pressure requirements as recommended by Manufacturer. Contractor is required to adjust building pressure regulator to deliver proper pressure to the point of use regulators that shall be installed for each and every radiant heater, as recommended by Manufacturer.

B. Adjust burner and other unit components for optimum heating and performance and efficiency. Adjust heat distribution features, including reflectors, to provide optimum heat distribution for objects, personnel, and spaces served.

C. After completing system installation, inspect heaters and associated components. Repair scratches and mars of finish to match original finish. Clean unit internally using methods and materials recommended by Manufacturer.

3.3 COMMISSIONING

A. Startup Services shall be provided to start and demonstrate units, and operate controls and safeties.

B. Test and Adjust controls and safeties, replace damaged or malfunctioning controls and equipment.

C. Correct deficiencies identified by test and observations and retest until specified requirements are met.

3.4 OPERATION AND MAINTENANCE

A. The final installation shall be complete and functional in every respect. The equipment shall perform as specified, and all features of every piece of equipment installed under this contract shall be accessible for operation and maintenance. In addition, the

installation of the materials or equipment for this project shall provide access for all features for the operation and maintenance of related or adjacent equipment to the materials and equipment installed under this project. Contractor shall install all equipment and materials as specified so that all equipment is completely accessible for such maintenance and operation as changing blower motors, oiling fans, inspecting and repairing controls, etc.

END OF SECTION

SECTION 15761

DUCTLESS AIR CONDITIONING SYSTEMS

PART 1 - GENERAL

1.1 SECTION INCLUDES

A. Outside unit

B. Refrigerant piping and insulation

C. Condensate piping and insulation

D. Controls

E. Condensate drain

1.2 SCOPE

A. The Contractor shall install a wall mounted ductless air conditioning unit (cooling only) and all appurtenances complete in every respect, as specified herein. The completed installation shall be fully functional and comply with all state, federal and local codes, standards and regulations.

1.3 RELATED SECTIONS

A. Section 15050 – Basic Mechanical Requirements

1.4 REFERENCES: In addition to state and local ordinances, standards and codes published by the following shall govern the quality of the construction applicable:

A. ASHRAE – American Society of Heating, Refrigeration and Airconditioning Engineers

B. ARI – American Refrigeration Institute

C. SMACNA – Sheet Metal and Airconditioning Contractors National Association

D. NEC – National Electrical Code (NFPA 70)

1.5 SUBMITTALS

A. Submit under provisions of the Uniform General Conditions and Special Conditions, and Section 15050.

B. Product Data: Submittal(s) shall include Manufacturers data on all equipment and materials, including air conditioner equipment (including rated capacities, electrical characteristics and connection requirements), piping (refrigerant and drain piping) insulation, and thermostat.

C. Submit credentials of Contractor and responsible on-the-job employees.

D. Submit Manufacturer's Installation Instructions.

1.6 QUALITY ASSURANCE

A. Perform Work in accordance with ANSI/ASHRAE 15.

B. Install equipment in accordance with ASHRAE and SMACNA Standards, and Manufacturers recommendations.

C. All mechanical work shall be performed by, or under the direct supervision of, a locally licensed mechanical contractor with a minimum of five years of documentable experience in the installation and repair of similar equipment to that described for this project.

1.7 WARRANTY

A. Provide one year warranty on all materials and workmanship, and Manufacturers five year warranty on air conditioning compressor.

PART 2 - PRODUCTS

2.1 GENERAL

A. Equipment capacities and efficiencies shall be as scheduled, or as specified herein, whichever is greater.

B. In some cases it may not be possible to describe in adequate detail the exact installation of a feature or equipment. In those instances, the Contractor shall solicit the guidance and direction of the Owners Construction Inspector, whose decision will be final.

2.2 MANUFACTURER (Note that both the inside and outside units shall be products of the same Manufacturer.)

A. Friedrich

B. Mitsubishi

C. Sanyo

D. EMI

2.3 OUTSIDE UNIT

A. Self contained factory built outdoor package containing compressor, refrigerant drier, reversing valve, condenser coil and condenser fan.

B. Compressor: hermetic, 3600 rpm maximum, resiliently mounted integral with condenser securely bolted in place, with positive lubrication, crankcase heater, high pressure control, motor overload protection, service valves and drier. Scroll compressors are preferred, but not required.

C. Air Cooled Condenser: copper tube and aluminum fin coil, with direct drive axial propeller fan resiliently mounted, galvanized fan guard.

D. Cooling Capacity: Rated cooling output as scheduled in the drawings.

E. Installation: The units shall be installed on a concrete equipment pad with a resilient pad at each corner of the unit, plus a resilient pad at the mid point of units longer than 4 feet. Each resilient pad shall be a 4" square ribbed neoprene sandwiching a layer of cork. The pad shall be constructed of a 1/2" layer of cork laminated between 1/4" layers of ribbed neoprene. The equipment platform shall be provided of such size that the pad shall be a minimum of 12 (twelve) inches larger than the unit on all sides, with 36 inches between units. Refer to detail(s) on drawing.

2.4 REFRIGERATION PACKAGE

A. Refrigerant Line Set: Sized as recommended by Manufacturer. Insulation shall be installed on both refrigerant lines **prior** to installation. Install 1/2" thickness Armaflex (or approved equal), and paint insulation with two coats of exterior latex where insulation is exposed to sunlight.

2.5 INDOOR UNIT

A. Configuration: Electric refrigeration indoor coil and integral filter section with replaceable "throw-away" filter.

B. Units: Self-contained, units, factory assembled, pre-wired unit consisting of cabinet, supply fan, integral circuit breaker, controls, air filter, and inside coil. Cabinet shall be constructed with a high impact resistant plastic concealing all tubing and wiring. Cabinet panels shall be removable for complete access to all serviceable components.

C. Air Handling: Fan shall be capable of moving required air quantities required with a dirty filter in place. Provide belt driven blower(s) with heavy duty, self aligning, permanently sealed and lubricated bearings. All moving parts shall be resiliently mounted on a rugged frame, and isolated from the rest of the cabinet. Adjustable motor pulley shall provide variable speed adjustment.

D. Indoor Unit Inside Coil: Copper tube aluminum fin assembly, with drain pan, drain connection, refrigerant piping connections and factory installed thermostatic expansion valve.

E. Controls: Each unit shall be furnished with a complete and working system of controls, contactors, relays, control power transformer, and terminal block.

F. The unit shall be supplied with a factory manufactured return grille, mounted directly to the unit, for a "non-ducted" air return. The return grille shall not interfere with the removal and replacement of filters.

2.6 CONDENSATE DRAIN

A. Condensate piping shall be hard drawn Type K copper, installed with a minimum of 1/8 inch per foot slope, shall have a minimum 4 inch deep P-trap, and shall be completely insulated with 1/2" wall Armaflex closed cell piping insulation, or approved equal. All turns in the piping system shall be accomplished using long sweep bends. Short radius 90's shall not be used.

2.7 SECONDARY DRAIN

A. If the equipment is supplied with a secondary drain connection, piping shall be hard drawn Type K copper, installed with a minimum of 1/8 inch per foot slope, installed without a "P-trap", and connected to the primary condensate drain ahead ("upstream") of the primary drain P-trap.

2.8 OPERATING CONTROLS ("Thermostat")

A. Programmable low voltage (24 volt DC) thermostat with subbase, cycle's indoor and outdoor unit to maintain room temperature setting. Thermostat shall be equipped with a subbase with an "off-cool" switch, where the "off" setting shall disable the system. The "cool" setting shall cycle the outdoor unit on and off to maintain the room temperature setting. Thermostat subbase shall also be equipped with a "FAN: On - Auto" switch which in the "auto" position, shall cause the fan to operate automatically with the cooling cycles, and in the "on" position, the fan shall be "on" at all times. The thermostat shall be capable of controlling the room temperature within 2 degrees of set point. Programmability shall include four daily set points or two each of "occupied" and "unoccupied" periods per day. Weekdays shall be programmed separate from weekend days, but not necessarily individually. Thermostat shall be manufactured by unit Manufacturer, unless noted otherwise. Operating manuals shall be supplied with each thermostat.

B. Remotely operated temperature controls are acceptable as an alternative, and shall be submitted for approval by the engineer.

PART 3 - EXECUTION

3.1 GENERAL

A. When removing refrigerant for any reason, Contractor shall capture refrigerant with a compressor package designed and manufactured for that purpose, and dispose of the refrigerant to a certified refrigerant recycling facility. Under no circumstances shall refrigerant be released directly to the atmosphere. All refrigerants shall be handled and stored as required by current federal, state and local standards, recommendations, regulations, ordinances, and laws.

B. Contractor shall install refrigerant piping, and charge unit. Charging unit consists of drawing a complete vacuum on the refrigerant containing system, including piping, and charging with new refrigerant. Care shall be taken in the installation of refrigerant to

eliminate the discharge of refrigerant to the atmosphere. System shall be run and pressures checked to assure that system is properly charged.

C. The finished cooling system shall operate as specified and according to the standards, guidelines and regulations referenced.

D. Electrical installation, connection of equipment to electrical supplies and installation of wiring and conduit shall conform to NEC standards, recommendations and requirements, and to the electrical drawings.

3.2 OPERATION AND MAINTENANCE

A. The final installation shall be complete and functional in every respect. The equipment shall perform as specified, and all features of every piece of equipment installed under this contract shall be accessible for operation and maintenance. In addition, the installation of the materials or equipment for this project shall provide access for all features for the operation and maintenance of related or adjacent equipment to the materials and equipment installed under this project. Contractor shall install all equipment and materials as specified so that all equipment is completely accessible for such maintenance and operation as changing filters, operating disconnect switches or breakers, inspecting and repairing controls, cleaning coils, etc.

END OF SECTION

SECTION 15767

HEAT PUMP AIR CONDITIONING SYSTEMS

PART 1 - GENERAL

1.1 SECTION INCLUDES

A. Air Handler Indoor units

B. Heat pump outside units

C. Controls

1.2 SCOPE

A. The Contractor shall install heat pump systems with electric auxiliary heat and all appurtenances complete in every respect, as specified herein. The completed installations shall be fully functional and comply with all state, federal and local codes, standards and regulations.

1.3 RELATED SECTIONS

A. Section 15050 – Basic Mechanical Requirements

B. Section 15097 – Duct Insulation

C. Section 15810 – Ductwork

D. Section 15820 – Ductwork Accessories

1.4 REFERENCES - In addition to state and local ordinances, standards and codes published by the following shall govern the quality of the construction applicable:

A. ASHRAE – American Society of Heating, Refrigeration and Airconditioning Engineers

B. ARI – American Refrigeration Institute

C. SMACNA – Sheet Metal and Airconditioning Contractors National Association

D. NEC – National Electrical Code (NFPA 70)

E. UMC – Uniform Mechanical Code, latest edition

F. UPC – Uniform Plumbing Code, latest edition

1.5 SUBMITTALS

A. Submittal must follow the provisions of the Uniform General Conditions and Special Conditions, and Section 15050 of these specifications.

B. Product Data: Provide Manufacturers data on all equipment and materials, including all indoor and outdoor units.

C. Provide complete Manufacturer's Installation Instructions.

1.6 QUALITY ASSURANCE

A. Perform Work in accordance with ANSI/ASHRAE 15.

B. All mechanical work shall be performed by, or under the direct supervision of, a locally licensed mechanical contractor with a TDLR Class "A" Installer's License, and a minimum of five years of documentable experience in the installation and repair of similar equipment to that described for this project.

C. No asbestos-bearing, or solvent based, or lead containing materials shall be used on this project. If any prohibited materials are installed, all of the material, including the underlying material, shall be removed and disposed of as required by local, state, and federal requirements.

1.7 WARRANTY

A. Provide one-year warranty on all materials and workmanship, and Manufacturer's five-year warranty on air conditioning compressors.

PART 2 - PRODUCTS

2.1 GENERAL

A. Equipment capacities and efficiencies shall be as scheduled, or as specified herein, whichever is greater.

B. In some cases it may not be possible to describe in adequate detail the exact installation of a feature or equipment. In those instances, the Contractor shall solicit the guidance and direction of the Owners Construction Inspector, whose decision will be final.

2.2 HEAT PUMP and AIR HANDLER MANUFACTURER (Note that both the inside and outside units shall be products of the same Manufacturer.)

A. Trane

B. Carrier

C. Lennox

D. Approved equal

2.3 OUTSIDE UNIT

A. Self contained factory built outdoor package containing compressor, refrigerant drier, reversing valve, condenser coil and condenser fan.

B. Compressor: Two stage Copeland scroll ultra tech compressor with part load capabilities with multi-stage operation, resiliently mounted integral with condenser securely bolted in place, with positive lubrication, crankcase heater, high pressure control, motor overload protection, service valves and drier.

C. Air Cooled Condenser: copper tube and aluminum fin coil, with direct drive axial propeller fan resiliently mounted, galvanized fan guard.

D. Cooling Capacity: Rated cooling output as scheduled in the drawings in accordance to A.R.I. Standard 210/240 Rating Conditions.

E. Unit shall include low ambient controls for operation at ambient conditions down to 20°F.

F. Installation: The units shall be installed on a poured-in-place concrete equipment pad with a resilient pad at each corner of the unit, plus a similar resilient pad at the mid point of units longer than 4 feet. Each resilient pad shall be 4" square. The pads shall be constructed of a 1/2" layer of cork laminated between 1/4" layers of ribbed neoprene. The equipment platform shall be provided of such size that the pad shall be a minimum of 6 (six) inches larger than the unit on all sides, with a minimum of 48 inches between units. Refer to detail(s) on drawing. In the event of a conflict, the greater quantity, quality, and distances shall prevail.

2.4 INDOOR UNIT

A. Configuration: Multi-Position variable speed indoor blower motor with electronic blower controller with ramping profiles. Unit shall be equipped with electric heating, electric refrigeration heat pump coil, and integral filter section with replaceable "throw-away" filter. There shall be a single point electrical connection on each indoor unit/furnace.

B. Units: Self-contained, factory assembled, pre-wired unit consisting of cabinet, supply fan, electric heating unit, integral circuit breaker, controls, air filter, and heat pump inside coil. Cabinet shall be constructed of heavy gauge galvanized steel, completely lined with thick fiberglass insulation. Cabinet panels shall be removable for complete access to all serviceable components.

C. Heating Elements: Helix wound nichrome bare heating elements, directly exposed in the air stream.

D. Air Handling: Fan shall be capable of moving required air quantities required by both heating and cooling modes, with ductwork as designed connected to the equipment, and dirty filter in place. Provide belt driven blower(s) with heavy duty, self aligning,

permanently sealed and lubricated bearings. All moving parts shall be resiliently mounted on a rugged frame, and isolated from the rest of the cabinet.

E. Heat Pump Inside Coil: Copper tube aluminum fin assembly, galvanized drain pan, drain connection, refrigerant piping connections and factory installed thermostatic expansion valve.

F. Controls: Thermal sequencer relay brings the heating elements on and off line, in sequence and equal increments, with a time delay between each element. Sequencer also initiates and terminates blower operation. Heaters shall be factory assembled with controls installed and completely prewired for plug-in field power connection. Fixed stop at maximum permissible setting, will de-energize electric heat on excessive temperature and re-energize when temperature drops to lower safe value. Each unit shall be furnished with a complete and working system of controls, contactors, relays, control power transformer, and terminal block.

2.5 REFRIGERATION PACKAGE

A. Refrigerant Line Set: Sized as recommended by Manufacturer. Insulation shall be installed on each refrigerant line (both liquid and suction) prior to installation. Install 1/2" thickness Armaflex (or approved equal), and paint insulation with two coats of exterior grade latex where insulation is exposed to sunlight.

2.6 CONDENSATE DRAIN

A. Condensate drain piping shall be connected to the equipment and shall be hard drawn Type "K" copper. The complete condensate drain piping shall have a P-trap, and insulation consisting of 1/2" wall Armaflex, or approved equal. The P-trap shall have a wetted depth of a minimum of 3 inches. The drain at the unit shall be vented downstream of the P-Trap. Connect condensate drains to the drainage system. Condensate drain shall have a minimum of a 1" (one inch) gap above the sanitary sewer piping.

B. Horizontally installed units shall be provided with a drain pan, configured to capture all condensate overflows from the unit. Pan shall be fitted with a float switch to sense when the pan is half full, and shall be wired into the controls to disable the unit.

2.7 SECONDARY DRAIN

A. If the unit has a connection for a secondary or "overflow" drain, then the drain shall be connected to the primary drain. Drain piping shall be constructed with the same materials as the primary drain, installed with a minimum of 1/8 inch per foot slope, installed without a "P-trap," and connected to the primary condensate drain ahead ("upstream") of the primary drain P-trap.

2.8 OPERATING CONTROLS ("Thermostat")

A. Programmable Room Thermostat: Low voltage (24 volt AC) programmable thermostat cycles heat pump and furnace to maintain room temperature setting. Thermostat shall be

rated for 2 stage cooling and 3 stages of heating. Thermostat shall also be equipped with a "FAN: On – Auto" switch which in the "auto" position, shall cause the fan to operate automatically with the heating and cooling cycles, and in the "on" position, the fan shall be "on" at all times. The thermostat shall be capable of controlling the room temperature within 2 degrees of setpoint, except that in the second stage of heating, the temperature shall be maintained within 3 degrees of setpoint. The thermostat shall be capable of 4 settings per day, with each day of the week capable of individual programming. The thermostat shall automatically switch between heating and cooling, depending solely on whether the temperature in the building is above or below the programmed setpoint or "deadband" range. Thermostat shall be as manufactured by Dx split system manufacturer with humidity control in cooling mode or approved equal. An operating manual shall be supplied with each thermostat.

B. The "cool" setting shall enable the heat pump reversing valve in cooling mode and cycle the heat pump unit on and off to maintain the room temperature setting.

C. The "heat" setting shall enable the heat pump reversing valve in heating mode and cycle the heat pump on and off to maintain the room temperature setting.

D. A second stage of heating shall cycle furnace electric heat on and off if the heat pump is unable to satisfy heating demand.

PART 3 - EXECUTION

3.1 GENERAL

A. If refrigerant must be removed for any reason, Contractor shall capture refrigerant with a compressor package designed and manufactured for that purpose, and dispose of the refrigerant to a certified refrigerant recycling facility. Under no circumstances shall refrigerant be intentionally released directly to the atmosphere. All refrigerants shall be handled and stored as required by current federal, state and local standards, regulations and/or laws.

B. The installation of the complete system includes penetrations and modifications to the existing building.

C. The completed central heating and cooling system shall operate as specified and according to the standards, guidelines and regulations referenced.

D. Restore all damaged construction to an "as found" condition.

3.2 AIR CONDITIONER/FURNACE INSTALLATION

A. Install new air handlers, inside coils, drain piping, thermostats, outside units, refrigerant piping, and vapor and drain line insulation as specified. Connect equipment to ductwork and electrical supplies as necessary for a complete installation.

B. Install the air handlers in a manner to maximize the accessibility to the unit for maintenance, providing Manufacturer recommended clearances. The installation shall not

limit or restrict access to the filter, nor to the unit controls. In the event that the installation is found to restrict access to features requiring regular or occasional maintenance, the Contractor shall correct the installation of the equipment to comply with the requirements of this specification.

C. Contractor shall install refrigerant piping, and charge unit. Charging unit consists of drawing a complete vacuum on the refrigerant containing system, including piping, and charging with new refrigerant. Care shall be taken in the installation of refrigerant to eliminate the discharge of refrigerant to the atmosphere. System shall be run and pressures checked to assure that system is properly charged.

D. The finished central heating and cooling system shall operate as specified and according to the standards, guidelines and regulations referenced.

3.3 OUTSIDE UNITS

A. Install outside units in locations indicated in Site Plan, and as recommended by Manufacturer. All recommended clearances shall be observed in the installation. Note that each unit shall be mounted on resilient vibration damping material, supported at all four corners.

3.4 THERMOSTAT INSTALLATION

A. Thermostats shall be mounted in the approximate location indicated in the drawings. Install each thermostat with a clear, locking, vandal proof guard. Provide operational manuals for thermostats as a part of the Manuals required for the closeout of the contract. The number of manuals provided shall equal the number of thermostats installed.

3.5 OPERATION AND MAINTENANCE

A. The final installation shall be complete and functional in every respect. The equipment shall perform as specified, and all features of every piece of equipment installed under this contract shall be accessible for operation and maintenance. In addition, the installation of the materials or equipment for this project shall provide access for all features for the operation and maintenance of related or adjacent equipment to the materials and equipment installed under this project. Contractor shall install all equipment and materials as specified so that all equipment is completely accessible for such maintenance and operation as changing filters, operating disconnect switches or breakers, inspecting and repairing controls, cleaning coils, etc.

END OF SECTION

SECTION 15810

DUCTWORK

PART 1 - GENERAL

1.1 WORK INCLUDES

A. Single wall rectangular duct

B. Flexible metal duct

C. Double wall spiral insulated round duct

1.2 RELATED WORK

A. Submit under provisions of Uniform General Conditions, Special Conditions, and Section 15050.

B. Section 15050 – Basic Mechanical Requirements

C. Section 15060 – Supports and Anchors

D. Section 15097 – Ductwork Insulation

1.3 REFERENCES

A. ASHRAE – Handbook of Fundamentals; Duct Design

B. ASHRAE – Handbook of Equipment; Duct Construction

C. ASTM A 90 – Weight of Coating on Zinc-Coated (Galvanized) Iron or Steel Articles

D. ASTM A 525 – General Requirements for Steel Sheet, Zinc-Coated (Galvanized) by the Hot-Dip Process

E. ASTM A 527 – Steel Sheet, Zinc-Coated (Galvanized) by Hot-Dip Process, Lock Forming Quality

F. NFPA 90A – Installation of Air Conditioning and Ventilating Systems

G. SMACNA – HVAC Duct Construction Standards

H. UL 181 – Factory-Made Air Ducts and Connectors

1.4 REFERENCES

A. Fundamentals Handbook, American Society of Heating, Refrigerating, and Air Conditioning Engineers (ASHRAE)

B. Equipment Handbook, ASHRAE

C. HVAC Duct Construction Standards, 1995, Sheet Metal and Air Conditioning Contractors National Association (SMACNA)

D. HVAC Duct System Design, 1990, SMACNA

E. Engineering Report No. 132 (Spacing of Duct Hangers), UMC

1.5 DEFINITIONS

A. Duct Sizes: Duct sizes indicated in the drawings or specifications are inside clear dimensions.

1.6 REGULATORY REQUIREMENTS

A. Construct ductwork to NFPA 90A, NFPA 90B and NFPA 96 standards.

B. All duct materials must be UL 181, Class 1 listed.

1.7 SUBMITTALS

A. Submit on double wall spiral insulated round duct, including fittings, hangers, insulation, and shop drawings. All submittal material shall be clearly marked.

PART 2 - PRODUCTS

2.1 DUCTWORK GENERAL

A. All ductwork indicated on the Drawings, specified or required for the air conditioning and ventilating systems shall be of materials as hereinafter specified unless indicated otherwise. All air distribution ductwork shall be fabricated, erected, supported, etc., as a minimum, in accordance with all applicable standards of SMACNA Duct Manuals where such standards do not conflict with NFPA 90A and where class of construction equals or exceeds that noted herein. Some aspects of this specification will exceed SMACNA and NFPA standards. All exhaust ductwork including toilet room exhausts shall be constructed as specified for a 2" W.G. System as described in SMACNA HVAC Duct Construction Standards unless a higher pressure requirement is noted on the drawings.

B. All ductwork shown on the Drawings, specified or required for the heating, ventilating and air conditioning systems shall be constructed and erected in a first class manner; level, vertical and parallel to building lines. The work shall be guaranteed for a period of one (1) year from and after the date of acceptance of the job against noise, chatter, whistling, vibration, and free from pulsation under all conditions of operation. After the system is in operation, should these defects occur, they shall be corrected as directed by the Engineer.

2.2 SINGLE WALL RECTANGULAR DUCT

A. The minimum thickness of sheet metal used for ductwork construction shall be 24 gauge. Note that this does not refer to ductwork reinforcing materials. **This requirement is primary.**

B. Unless noted otherwise, fabricate low pressure metal duct from galvanized steel sheet having a zinc coating of 1.25 oz per sq ft for each side in accordance with ASTM A90 and conforming to ASTM A653 and A924 Standards. For rectangular ducts utilize drive slip or hemmed “S” slip joints. For round duct use crimp and bead joints.

C. All ductwork shown in the drawings is considered low pressure ductwork and as a minimum shall conform to the requirements for a 2” W.G. System as described in SMACNA HVAC Duct Construction Standards, Second Edition, published in 1995, with addenda, unless a higher pressure requirement is noted on the drawings.

D. In all rectangular supply, return and exhaust ducts, and all other ducts noted on the drawings, changes of direction shall be made using turns of 45° or less, or 90°. No other angle of turn is allowed. All rectangular, non-radius elbows of 90º shall have turning vanes as detailed in Specification Section 15820 – Ductwork Accessories. Duct turns greater than 90º are not allowed. Elbows of 90° may be radius type, having a centerline radius of 1-1/2 times the duct diameter or width. Elbows in round ducts may be smooth radius as described above or 4-piece 90 degree elbows or 3-piece 45 degree elbows.

2.3 FLEXIBLE METAL DUCT

A. Flexible duct ("flex duct"), if used, shall be flexmaster type 8B-acoustical insulated helix reinforced corrosion resistant galvanized steel formed and mechanically locked to fabric with black fire retardant polyethylene vapor barrier and fiberglass insulation blanket factory wrapped with a minimum thermal conductance equal to R=8.0. The duct shall be secured and sealed to the adjoining sheet metal duct using a Stainless steel clamp quick release LS series and duct sealant. All materials shall be installed as recommended by Manufacturer. The material, as installed, shall be limited to a maximum flame and smoke spread rating of 25/50. Flex duct shall be rated at a minimum of 10” w.g. positive pressure, and 1” w.g. negative pressure, without deformation or collapse.

B. Flex duct runs are limited to 5 feet in length unless noted otherwise on the drawings. Minimum flex duct size is 8" nominal.

C. If flexible metal duct is connecting to double wall spiral insulated round duct a insulation stop fitting shall be installed to transition from double wall to single wall.

D. Install per Manufacturer recommendations mechanically securing the connection to the duct and diffuser by installing sheet metal screws. Screws around the circumference of the duct, use at least three #8 sheet metal screws. If larger than 12" use at least five #8 sheet metal screws.

E. Apply duct sealant around the perimeter of the duct section joint and all sheet metal screws at all joints.

F. Allow at least 48 hours for sealant to cure before pressure testing for leaks

G. Secure insulation joints using staples, tape with 4" wide fiberglass tape embedded in Foster 30-35 white vapor barrier Emulsion and covered with Foster 30-35 white vapor barrier Emulsion until the tape is completely covered. If the project is an existing building retrofit project contractor shall seal insulation joints with foil backed tape with woven string stapled in at least two places per side, in lieu of fiberglass fabricated cloth with mastic.

2.4 DOUBLE WALL SPIRAL INSULATED ROUND DUCT

A. McGill Airflow L.L.C. factory manufactured double wall galvanized solid sheet metal with spiral lock seam construction interlocking helical seam that runs the length of the duct's outer pressure shell, "acousti-k27" with a galvanized 28 gauge sheet metal perforated inner liner with a 1" layer of insulation sandwiched between with a maximum thermal conductance of 0.27 Btu/hr/SQFT/°F., or approved equal. Pressure classification for ductwork is +4 inches of water column. Galvanized steel sheet having a zinc coating of 1.25 oz per sq ft in accordance with ASTM A90 and conforming to ASTM A653 and A924 Standards.

B. All ductwork with an outer shell dimension 24" and larger shall have a McGill Airflow Uniflange, Butyl rubber gasketing connections with starter holes for sheet metal fasteners. All ductwork smaller than 24" shall be connected with a designed double wall slip coupling and/or fitting collar with extended inner collars. Insulation shall be mated at every connection.

C. All ductwork shown in the drawings shall conform to the requirements for 4" W.G. System as described in SMACNA HVAC Duct Construction Standards unless a higher pressure requirement is noted on the drawings.

D. All transitions from double wall to single wall shall consist of a transition fitting with a insulation stop.

E. The metal gauges listed in the 1995 SMACNA HVAC Duct Construction Standards for a 4" W.G. System are the minimum which shall be used for this project, see table below. It shall be noted that the Contractor is responsible that the metal gauge selected is heavy enough to withstand the physical abuse of the installation.

Max. Dia. Outer shell Duct Size	Spiral Seam Duct. US Standard Gauge	Fittings US Standard Gauge
Up to 12"	28	26
14"- 16"	26	24
18"	24	24
19" – 26"	24	22
27" – 36"	22	20

PART 3 - EXECUTION

3.1 INSTALLATION FOR SINGLE WALL RECTANGULAR DUCT

A. Refer also to requirements included in Part 2 of this specification.

B. Locate ducts with sufficient space around equipment to allow normal operating and maintenance activities.

C. Joints in round ducts shall be crimp and bead type with a minimum of three sheet metal screws and no more than 15" between screws. Joints in sectional elbows shall be sealed as specified for duct sealing.

3.2 INSTALLATION FOR DOUBLE WALL SPIRAL INSULATED ROUND DUCT

A. Slip-Joint Connection Procedure
1. Install per Manufacturer recommendations mechanically securing the connection by installing sheet metal screws through the outer shell of the duct size part of the connection, ½" from the stop bead. Screws shall be spaced no more than 15 inches apart around the circumference of the duct , use at least three screws for ducts 14 inches and smaller.
2. Apply duct sealant around the perimeter of the outer pressure shell of the exposed section joint and all sheet metal screws at all joints.
3. Allow at least 48 hours for sealant to cure before pressure testing for leaks.

B. Flanged-joint connection procedure
   1. Install per Manufacturer recommendations using a #10 self tapping sheet metal screws on 10 in. on center.
   2. Apply duct sealant around the perimeter of the outer pressure shell and flange covering all sheet metal screws. The butyl gasket material makes the joint seal.
   3. Allow at least 48 hours for sealant to cure before pressure testing for leaks.

3.3 DUCT SUPPORTS FOR SINGLE WALL RECTANGULAR DUCT

A. As a minimum, all horizontal ducts shall be supported by means of 1" x No. 18 U.S. gauge galvanized steel band hangers attached to the ducts by means of screws, rivets, or clamps and fastened to roof and/or ceiling structural members with toggle bolts, beam clamps or other approved means. **Supports SHALL NOT be attached to underside of roof deck.** Ducts also may be supported by 3/8" threaded galvanized rod with galvanized Unistrut type channel in a trapeze configuration. Duct shall have at least one pair of supports at 8'-0" on centers. Clamps shall be used to fasten hangers to reinforcing on sealed ducts. Perforated strap material ("Plumber's Tape") shall not be used to support ducts. Brace all ductwork and equipment to prevent lateral movement under operation.

3.4 DUCT SUPPORTS FOR DOUBLE WALL SPIRAL INSULATED ROUND DUCT

A. As a minimum, all horizontal ducts shall be supported by means of 1" x No. 18 U.S. gauge galvanized steel band hanger on slip joint fittings and single- strap hanger or double-strap hanger on Van Stone Connections attached to the ducts by means of screws, rivets, or clamps and fastened to roof and/or ceiling structural members with toggle bolts, beam clamps or other approved means. **Supports SHALL NOT be attached to underside of roof deck.** . Duct shall have at least one pair of supports at 12'-0" on centers. Clamps shall be used to fasten hangers to reinforcing on sealed ducts. Perforated strap material ("Plumber's Tape") shall not be used to support ducts. Brace all ductwork and equipment to prevent lateral movement under operation.

3.5 DUCT SEALING FOR SINGLE WALL RECTANGULAR DUCT

A. All transverse and longitudinal seams, joints and duct penetrations shall be sealed. Sealant is to be non-hardening, latex based mastic, water resistant, fire resistive and compatible with mating materials. **SOLVENT BASED DUCT SEALANTS ARE PROHIBITED**. Ducts shall be sealed to SMACNA Seal Class "C" McGill Airflow product United Duct Sealer Water Base or better. Any obvious, detectable leakage in longitudinal seams shall also be sealed. Other recommendations for the installation of ducts and use of sealants are required as a minimum standard. These specifications shall prevail if they require a better quality installation.

3.6 DUCT SEALING FOR DOUBLE WALL SPIRAL INSULATED ROUND DUCT

A. All transverse and longitudinal seams, joints and duct penetrations shall be sealed. Sealant is to be non-hardening, latex based mastic, water resistant, fire resistive and compatible with mating materials. **SOLVENT BASED DUCT SEALANTS ARE PROHIBITED**. Ducts shall be sealed to SMACNA Seal Class “A” McGill Airflow product United Duct Sealer Water Base or better. Any obvious, detectable leakage in longitudinal seams shall also be sealed. Other recommendations for the installation of ducts and use of sealants are required as a minimum standard. These specifications shall prevail if they require a better quality installation.

3.7 TESTING FOR ALL DUCT

A. Leakage testing of the ductwork installed under this specification is not required. However Contractor shall perform minimal “testing” by examining all ductwork for leaks by listening and feeling the ductwork while in service, and examining the insulated ductwork for evidence of leaking such as "ballooning" of insulation.

3.8 CLEANING OF SYSTEMS

A. Prior to Substantial Completion, all ducts shall be cleaned of all dust and dirt, and construction debris, if any, that has collected in the ducts. This may include, and shall not be limited to, swabbing ductwork that has collected dirt and dust.

END OF SECTION

SECTION 15820

DUCTWORK ACCESSORIES

PART 1 - GENERAL

1.1 WORK INCLUDES

A. Air turning devices

B. Volume control (balancing) and splitter dampers

C. Flexible duct connections

D. Fan screens

E. Duct access doors

F. Test openings

G. Round, low pressure duct taps

1.2 RELATED WORK

A. Section 15767 – Heat Pump Air Conditioning Systems

1.3 REFERENCES

A. AFBMA 9 – Load Ratings and Fatigue Life for Ball Bearings

B. AFBMA 11 – Load Ratings and Fatigue Life for Roller Bearings

C. AMCA 99 – Standards Handbook

D. AMCA 210 – Laboratory Methods of Testing Fans for Rating Purposes

E. NFPA 90A – Installation of Air Conditioning and Ventilating Systems

F. NFPA 92A (National Fire Protection Association) – Smoke Control Systems

G. SMACNA – Low Pressure Duct Construction Standards

H. UL 33 (Underwriters Laboratories, Inc.) – Heat Responsive Links for Fire-Protection Service

I. UL 181 – Factory-Made Air Ducts and Connectors

J. UL 555 (Underwriters Laboratories, Inc.) – Fire Dampers and Ceiling Dampers

1.4 SUBMITTALS

A. Submit shop drawings and product data under provisions of Section 15050.

B. Provide shop drawings for shop fabricated assemblies indicated, including volume control dampers duct access doors duct test holes. Provide product data for hardware used.

C. Product Data: Submittal data shall include the following:
1. Air turning devices
2. Volume control (balancing) dampers
3. Flexible duct connections
4. Duct access doors
5. Flexible connections
6. Test openings
7. Round, low pressure duct taps
8. Manufacturer's Installation Instructions

1.5 OPERATION AND MAINTENANCE DATA

A. Submit under provisions of Section 15050.

B. Maintenance Data: Include instructions for lubrication, motor and drive replacement, spare parts list, and wiring diagrams.

1.6 DELIVERY, STORAGE, AND HANDLING

A. Deliver, store, protect and handle products to site under provisions of Section 15050.

B. Protect motors, shafts, and bearings from weather and construction dust.

PART 2 - PRODUCTS

2.1 AIR TURNING DEVICES

A. Manufacturers:
1. Aero Dyne
2. Anemostat
3. Barber-Coleman
4. Hart & Cooley
5. Or approved equal

B. Construct turning vanes and runners for rectangular elbows in accordance with SMACNA HVAC Duct Construction Standards, Fig. 2-3, with no trailing edge. Turning vanes shall be single wall, constructed of 24 gage sheet metal, shall be 2" radius, and shall be spaced 1 ½" on center. Turning vanes shall be installed per Figure 2-4, in the same Standard. Note that all rectangular 90° turns shall not change dimension in the turn, so turning vanes shall be constructed and installed for symmetrical 90° turns.

2.2 VOLUME CONTROL (BALANCING) AND SPLITTER DAMPERS

A. Furnish and install dampers where shown on the Drawings and wherever necessary for complete control of the air flow, including all supply, return and exhaust branches, "division" in main supply, return and exhaust ducts, each individual air supply outlet and fresh air ducts. Where access to dampers through a fixed suspended ceiling is necessary, the Contractor shall be responsible for the proper location of access doors.

B. Splitter dampers shall be fabricated of steel not lighter than 16 gauge. The leading edge of the damper shall be hemmed. Each splitter shall be a minimum of 12" long or 1-1/2 times the width of the smaller of the two branches it controls, whichever is greater. Dampers shall be carefully fitted, and shall be controlled by locking quadrants equal to Ventlok (Ventfabrics Corporation) No. 555 on exposed uninsulated ductwork, No. 641 on exposed externally insulated ductwork and No. 677 (2-5/8" diameter) chromium plated cover plate for concealed ductwork not above lay-in accessible ceilings. Furnish and install end bearings for the damper rods on the end opposite the quadrant when No. 555 or No. 641 regulators are used, and on both ends when No. 677 regulators are used.

C. On concealed ductwork above lay-in accessible ceilings use Ventlok No. 555 or No. 641 locking quadrant for splitter dampers.

D. Dampers larger than three (3) square feet in area shall be controlled by means of rods hinged near the leading edge of the damper with provisions for firmly anchoring the rod and with end bearings supporting the axle.

E. Volume dampers shall be equal to Ruskin MD15/MDRS25 or Greenheck MBD/MBDR. Dampers shall be pre-manufactured and assembled, not shop fabricated. Blades shall not exceed 48 inches (48") in length or twelve inches (12") in width and shall be of the opposed interlocking type. The blades shall be of not less than No. 16 gauge galvanized steel supported on one-half inch (1/2") diameter rust-proofed axles. Axle bearings shall be the self-lubricating ferrule type.

F. All adjustable dampers installed in externally insulated ductwork shall be installed with Ventlok No. 639, or equal, elevated dial operators. Insulation shall extend under the elevated dial and shall be sealed in place. All adjustable dampers installed in internally insulated ductwork shall be installed with Ventlok No. 635, or equal, dial operators. All damper shaft end penetrations in the ductwork shall be installed with Ventlok #607 end bearings.

2.3 FLEXIBLE DUCT CONNECTIONS

A. Where ducts connect to fans, including roof exhausters, flexible connections shall be made using "Ventglas" fabric that is fire-resistant, waterproof, mildew resistant and practically air tight, and shall weigh approximately thirty ounces (30 oz.) per square yard. There shall be a minimum of one-half inch (1/2") slack in the connections, and a minimum of two and one-half inches (2½") distance between the edges of the ducts except that there shall also be a minimum of one inch (1") of slack for each inch of static pressure on the fan system. This does not apply to Air Handling Units with internal isolation.

2.4 FAN SCREENS

A. Furnish and install screens on all duct, fan, etc., openings furnished by this Contractor which lead to, or are, outdoors. Screens shall be No. 16 gauge, one-half inch (1/2") mesh in a removable galvanized steel frame. Provide safety screens meeting OSHA requirements for protection of maintenance personnel on all fan inlets and fan outlets to which no ductwork is connected.

2.5 TEST OPENINGS

A. Furnish and install in the return air duct and in the discharge duct of each fan unit Ventlok No. 699 instrument test holes. The test holes shall be installed in locations as required to measure pressure drops across each item in the system, e.g., OA louvers, filters, fans, coils, intermediate points in duct runs, etc.

2.6 ROUND, LOW PRESSURE TAPS (Conical Bell Mouth Fittings)

A. Conical fittings may be used for duct taps and shall include quadrant dampers on all lines to air devices (diffusers and grilles) even though a volume damper is specified for the air device. (This does not apply to medium pressure duct.) Spin-in fittings shall be sealed at the duct tap with a gasket, or compression fit, or sealed with sealant specified for medium pressure ductwork. The location of spin-in fittings in the ducts shall be determined after dual or single duct terminal units are hung or the location of the light fixtures is known so as to minimize flexible duct lengths and sharp bends.

B. The conical fitting shall be made of at least 26 gage galvanized sheet metal. The construction to be a two-piece fitting with a minimum overall length of 6 inches and shall be factory sealed for high pressure requirements. Average loss coefficient for sizes 6, 8, and 10 shall be less than 0.055.

C. Each shall be provided with minimum 24 gage damper plate with locking quadrant operator and sealed end bearings. Damper blade shall be securely attached to shaft to prevent damper from rotating around shaft.

D. Provide flange and gasket with adhesive peel-back paper for ease of application. The fitting shall be further secured by sheet metal screws spaced evenly at no more than 4 inches on-center with a minimum of four screws per fitting.

E. The conical bellmouth fitting shall be Series 3000G as manufactured by Flexmaster U.S.A., Inc., Buckley Air Products, Inc., 'AIR-TITE', or approved equal.

PART 3 - EXECUTION

3.1 EXAMINATION

A. Verify ducts and equipment installations are ready for accessories.

3.2 INSTALLATION

A. Install turning vanes in all rectangular, mitered elbows in accordance with SMACNA standards and/or Manufacturer's recommendations.

B. Install equipment and accessories in accordance with Manufacturer's instructions.

C. Provide volume balancing dampers at points on low pressure supply, return, and exhaust systems where branches are taken from larger ducts as required for air balancing. Use splitter dampers only where indicated.

D. Provide duct test holes where indicated and where required for testing and balancing purposes. Refer also to Section 15950.

END OF SECTION

SECTION 15830

FANS

PART 1 - GENERAL

1.1 SECTION INCLUDES

A. Ceiling exhaust fans

B. Inline cabinet exhaust fans

C. Wall and roof mounted centrifugal exhaust fans

1.2 RELATED WORK

A. Section 15050 – Basic Mechanical Requirements

B. S Section 15767 – Heat Pump Air Conditioning Systems(ductwork)

C. Section 15820 – Ductwork Accessories

D. Division 16 – Electrical

1.3 REFERENCES

A. AFBMA 9 – Load Ratings and Fatigue Life for Ball Bearings

B. AFMBA 11 – Load Ratings and Fatigue Life for Roller Bearings

C. AMCA 99 – Standards Handbook

D. AMCA 210 – Laboratory Methods of Testing Fans for Rating Purposes

E. AMCA 261 – Directory of Products Licensed to Bear the AMCA Certified Ratings Seal

F. AMCA 300 – Test Code for Sound Rating Air Moving Devices

G. AMCA 301 – Method of Publishing Sound Ratings for Air Moving Devices

H. NFPA 70 – National Electrical Code

I. NFPA 96 – Installation of Equipment for the Removal of Smoke and Grease Vapors from Commercial Cooking Equipment

J. SMACNA – HVAC Duct Construction Standards – Metal and Flexible

K. UL 705 – Power Ventilators

1.4 SUBMITTALS

A. Submittals must follow the provisions of the Uniform General Conditions, Special Conditions and Section 15050 of these specifications.

B. Product Data: Provide data on fans and accessories including sound power levels at rated capacity, and electrical characteristics and connection requirements.

C. Provide complete Manufacturer's Installation Instructions.

1.5 OPERATION AND MAINTENANCE DATA

A. Submit under provisions of the Uniform General Conditions, Special Conditions and Section 15050.

B. Maintenance Data: Include instructions for lubrication, motor and drive replacement, spare parts list, and wiring diagrams.

1.6 DELIVERY, STORAGE, AND HANDLING

A. Deliver, store, protect and handle products to site under provisions of the Uniform General Conditions, Special Conditions and Section 15050.

B. Protect motors, shafts, and bearings from weather and construction dust.

PART 2 - PRODUCTS

2.1 MANUFACTURERS

A. Ceiling Mounted Fans and Systems:
1. Dayton
2. Broan
3. Car-Mon
4. Cook
5. Greenheck
6. Approved equal of capacities and types as scheduled
7. Equivalent fans selections shall not increase motor horsepower (amperage), or increase noise level from that specified.

B. Inline Cabinet Fans:
1. Greenheck
2. Chicago Blower
3. Acme
4. Cook
5. or approved equal

C. Wall and Roof Mounted Centrifugal Exhaust Fans:

1. Greenheck
2. Chicago Blower
3. Buffalo Forge
4. Woods
5. Cook
6. Approved equal

2.2 CEILING MOUNTED EXHAUST FANS

A. Direct drive centrifugal forward curved wheel in steel housing.

B. Resiliently mounted lifetime lubricated plug-in motor.

C. Matte white polymeric grille with torsion spring mounting.

D. Polymeric duct connection collar and backdraft shutter.

E. Provide optional wall cap where indicated on drawings.

F. Provide disconnect switch option for all fans and motor overload option for all fractional horsepower fans.

2.3 INLINE CABINET FANS

A. Performance Ratings: Conform to AMCA 210 and/or bear the AMCA Certified Rating Seal.

B. Fabrication: Corrosion resistant galvanized steel housing, lined with 1/2” sound absorbing fiberglass insulation. Outlet duct shall be complete with integral aluminum backdraft damper. Fan shall be configured for horizontal inlet and outlet connections.

C. Static and Dynamic Balance: Eliminate vibration or noise transmission to occupied areas.

D. Fan shall be forward curved, direct drive inline cabinet fan, conforming to the scheduled capacity requirements.

E. Motors shall have automatic reset thermal overload protection, and shall be mounted on vibration isolators. Motor shall be compatible for use with speed controls.

F. Cover shall be easily removable for access to motor.

G. Accessories: Provide factory installed disconnecting means.

2.4 WALL AND ROOF MOUNTED CENTRIFUGAL EXHAUST FANS

A. General:
1. All fans shall be backward inclined, or airfoil type. Radial and forward inclined fans are not acceptable.

2. Performance Ratings: Conform to AMCA 210 and bear the AMCA Certified Rating Seal.
3. Sound Ratings: AMCA 301, tested to AMCA 300, and bear AMCA Certified Sound Rating Seal.
4. Fabrication: Conform to AMCA 99.
5. Performance Base: 1000 feet above sea level conditions.
6. Temperature Limit: Maximum 600°F (unless noted otherwise).
7. Static and Dynamic Balance: Eliminate vibration or noise transmission to occupied areas.
8. Grease lubricated and sealed bearings shall be selected for a minimum average life in excess of B-10, minimum life 50,000 hours at maximum catalogued operating conditions. Grease fittings shall be accessible without the disassembly of any part of the fan, or the removal of panels or shrouds. In the event that a grease fitting is inherently inaccessible, the fitting shall be extended to an accessible location using stainless steel tubing. The tubing shall contain at least one full strain relief loop of a minimum diameter of 4 inches.
9. Capacity ratings shall be based on tests performed in accordance with AMCA Standard 210. Each fan shall carry near the unit nameplate the AMCA seal indicating that capacity ratings are certified.
10. Housings for all fans shall be spun aluminum and shall have a mounting ring or frame to provide for mounting of fan.
11. Fan wheels shall be aluminum, non-overloading, centrifugal, backward-inclined or airfoil, with aluminum rub ring.
12. Accessories shall include a gravity backdraft damper, and ¼" mesh screen. Damper shall be installed on damper trays so as to not have their operation obstructed by the fan.

B. Wall mounted centrifugal exhaust fans:
1. All surfaces exposed to airflow shall have a Heresite or baked phenolic coating.
2. Fans shall have an explosion proof or intrinsically safe, disconnect switch and vibration isolation for entire motor and drive assembly. Motor shall be explosion proof or TEFC, 115 VAC, 60 cycle, single phase, with thermal overloads, unless specifically stated otherwise in equipment schedule in drawings.

PART 3 - EXECUTION

3.1 INSTALLATION

A. Install in accordance with Manufacturer's instructions.

B. Do not operate fans for any purpose until ductwork is clean, filters in place, bearings lubricated, and fan has been test run under observation.

C. Install exhaust fans and their attendant ductwork at locations indicated on drawings. Refer to Architectural plans for additional requirements.

D. Fans shall be operated as indicated on drawings. Refer to Electrical Plans and Specifications.

END OF SECTION

SECTION 15850

AIR OUTLETS AND INLETS

PART 1 - GENERAL

1.1 WORK INCLUDES

A. Diffusers

B. Registers/Grilles

1.2 RELATED WORK

A. Section 15050 – Basic Mechanical Requirements

B. Section 15097 – Ductwork Insulation

C. Section 15767 – Heat Pump Air Conditioning Systems

D. Section 15810 – Ductwork

E. Section 15820 – Ductwork Accessories

1.3 REFERENCES

A. ADC 1062 – Certification, Rating and Test Manual

B. AMCA 500 – Test Method for Louvers, Dampers and Shutters

C. ANSI/NFPA 90A – Installation of Air Conditioning and Ventilating Systems

D. ARI 650 – Air Outlets and Inlets

E. ASHRAE 70 – Method of Testing for Rating the Air Flow Performance of Outlets and Inlets

F. SMACNA – Low Pressure Duct Construction Standard

G. Uniform Mechanical Code, latest edition

1.4 QUALITY ASSURANCE

A. Test and rate performance of air outlets and inlets in accordance with ADC Equipment Test Code 1062 and ASHRAE 70.

B. Test and rate performance of louvers in accordance with AMCA 500.

1.5 REGULATORY REQUIREMENTS

A. Conform to ANSI/NFPA 90A and UMC.

1.6 SUBMITTALS

A. Submit product data and Manufacturers installation instructions for all diffusers, grilles and registers under provisions of Uniform General Conditions, Special Conditions, and Section 15050.

B. Provide product data for items required for this project.

C. Submit schedule of outlets and inlets indicating type, size, location, application, and noise level.

D. Review requirements of outlets and inlets as to size, finish, and type of mounting prior to submitting product data and schedules of outlets and inlets.

PART 2 - PRODUCTS

2.1 AIR SUPPLIES AND RETURNS

A. Grilles, registers and ceiling outlets shall be as scheduled on the Drawings and shall be provided with sponge rubber or soft felt gaskets. If a Manufacturer other than the one scheduled is used, the sizes shown on the Drawings shall be checked for performance, noise level, face velocity, throw, pressure drop, etc., before the submittal is made. Selections shall meet the Manufacturer's own published data for the above performance criteria. The throw shall be such that the velocity at the end of the throw in the five foot occupancy zone shall neither be more than 50 FPM nor less than 25 FPM. Noise levels shall not exceed those published in the ASHRAE Guide for the type of space being served (NC level).

B. Locations of outlets on Drawings are approximate and shall be coordinated with other trades to make symmetrical patterns and shall be governed by the established pattern of the lighting fixtures or architectural reflected ceiling plan. Where called for on the schedules, the grilles, registers and ceiling outlets shall be provided with deflecting devices and manual damper. These shall be the standard product of the Manufacturer, subject to review by the Architect, and equal to brand scheduled.

2.2 ACCEPTABLE MANUFACTURERS – DIFFUSERS, GRILLES AND REGISTERS

A. Price

B. Metal*Aire

C. Titus

D. Krueger

E. Approved equal.

2.3 RECTANGULAR CEILING DIFFUSERS

A. Rectangular, extruded aluminum, all aluminum construction, multicore type diffuser to discharge air in either a four-way, 360 degree pattern, or a 3-way, 270 degree pattern with sectorizing baffles where indicated. Refer to schedule in construction drawings.

B. Provide inverted T-bar type installation frame, or in plaster ceilings, provide plaster frame and ceiling frame, as indicated in the diffuser schedule in the drawings.

C. Fabricate of aluminum with standard baked enamel off-white finish.

2.4 RECTANGULAR AIR RETURN GRILLE

A. Rectangular, aluminum, “egg-crate” design, for return of air to air handler. Refer to equipment schedule in drawings.

B. Fabricate with Manufacturer’s standard finish.

PART 3 - EXECUTION

3.1 INSTALLATION

A. Install items in accordance with Manufacturers' instructions.

B. Check location of outlets and inlets and make necessary adjustments in position to conform to architectural features, symmetry, and lighting arrangement.

C. Provide back draft dampers on gravity relief vent as specified.

D. Install diffusers to ductwork with air tight connection. Refer to equipment specifications.

E. Provide balancing dampers on duct take-off to diffusers, and grilles and registers, regardless of whether dampers are specified as part of the diffuser, or grille and register assembly.

F. Paint ductwork visible behind air outlets and inlets matte black.

G. All air supply devices shall be insulated on their topsides with blanket type insulation equal to the insulation used for insulating ductwork. See specifications for ductwork insulation.

END OF SECTION

SECTION 15950

TESTING, ADJUSTING AND BALANCING

PART 1 - GENERAL

1.1 SECTION INCLUDES

A. Testing, adjustment, and balancing of air systems

B. Measurement of final operating condition of HVAC systems

C. Sound measurement of equipment operating conditions

D. Vibration measurement of equipment operating conditions

1.2 RELATED SECTIONS

A. Section 15050 – Basic Mechanical Requirements

B. Section 15767 – Heat Pump Air Conditioning Systems

C. Section 15810 – Ductwork

D. Section 15820 – Ductwork Accessories

E. Section 15850 – Air Outlets and Inlets

1.3 REFERENCES

A. AABC – National Standards for Field Measurement and Instrumentation, Total System Balance

B. ASHRAE – Systems Handbook: Testing, Adjusting and Balancing

C. NEBB – Procedural Standards for Testing, Balancing and Adjusting of Environmental Systems

1.4 CONTRACTOR'S SCOPE OF WORK

A. Testing, adjusting, and balancing (TAB) of the air conditioning systems and related ancillary equipment shall be performed by an impartial, technically qualified TAB firm, with no connection to the Contractor or any Subcontractor, except for a contract to perform the work described herein. The preparation for, and corrections necessary for the Testing, Adjusting and Balancing of these systems, as described herein, are the responsibility of the Contractor.

B. As a part of this Construction Contract, the Contractor shall provide for a maximum of two changes or replacements to the sheaves, belts, dampers, valves, etc. required for correct air balance as advised by the TAB firm, at no additional cost to the Owner.

C. The Contractor shall provide and coordinate the services of qualified, responsible Subcontractors, suppliers and personnel as required to correct, repair, and/or replace any and all deficient items or conditions found during the course of this project, including the testing, adjusting and balancing period.

D. In order that all systems may be properly tested, balanced, and adjusted as specified herein, the Contractor shall operate said systems at his expense for the length of time necessary to properly verify their completion and readiness for TAB. This length of time shall be subject to the approval of the Construction Inspector.

E. Project Contract completion schedules shall allow for sufficient time to permit the completion of TAB services prior to Owner occupancy. The contractor shall allow no less than three weeks for the testing and balancing activities of the owner provided services, during the construction period, and prior to Substantial Completion as defined in the Uniform General Conditions of this Construction Document. Note that this period may be concurrent with other construction activities which shall not conflict with the TAB of the systems described herein.

F. The Drawings and Specifications indicate valves, dampers, and miscellaneous adjustment devices for the purpose of adjustment to obtain optimum operating conditions, and it will be the responsibility of the Contractor to install these devices in a manner that will leave them accessible and readily adjustable. Should any such device not be readily accessible, the Contractor shall provide access as required for successful completion of the TAB. Also, any malfunction encountered by TAB personnel and reported to the Contractor or the Construction Inspector shall be corrected by the Contractor immediately.

1.5 RESPONSIBILITIES OF THE PROJECT CONTRACTOR

A. The Contractor shall:
   1. Have the building and air conditioning systems in complete operational readiness prior to the beginning of TAB work.
   2. Allow sufficient time for the TAB firm to perform the contracted TAB work within the construction schedule.
   3. Promptly correct deficiencies of materials and workmanship identified as delaying completion of TAB work.
   4. Complete operational readiness of the building requires that construction status of the building shall permit the closing of doors, windows, ceilings installed, etc., to obtain simulated or projected operating conditions.
   5. Complete operational readiness of the air conditioning systems also requires that the following be accomplished:
      a. Air Distribution Systems:

1) Verify installation for conformity to design. All supply, return and exhaust ducts terminated and pressure tested for leakage as required by the Specifications.
2) All control dampers, and volume balancing dampers, shall be properly installed and functional. Dampers serving requirements of minimum and maximum outside, return and relief air shall provide tight closure and full opening, smooth and free operation.
3) All supply, return, and exhaust grilles, registers, diffusers shall be installed and operating properly.
4) Air handling systems, units and associated apparatus, such as heating and cooling coils, filter sections, access doors, etc., shall be sealed as specified in the equipment specifications to eliminate excessive bypass or leakage of air.
5) All fans (supply, return and exhaust) included in the project shall be operating and verified for freedom from vibration, proper fan rotation and belt tension; heater elements in motor starters of proper size and rating; record motor amperage and voltage on each phase at startup and running, and verify they do not exceed nameplate ratings.

b. Automatic Controls:
1) Verify that all control components are installed in accordance with project requirements and are functional, including all electrical interlocks, damper sequences, air resets, fire and freeze stats, high and low temperature thermostats, and duct mounted smoke detectors.
2) All controlling instruments shall be calibrated and set for designed operating conditions.

c. Tabulated Data:
1) The motor amperages and voltages for the air handler fans indicated above shall be recorded showing "actual" and "nameplate" voltage and amperage. This also applies to each piece of electrically driven air conditioning equipment in the system including exhaust fans and other fans of fractional horsepower.

1.6 REQUISITES OF THE TAB FIRM

A. The Firm shall be neither attached to, nor affiliated with, except by contract, any other Contractor or Subcontractor associated with this project.

B. The Firm shall be one which is organized to provide professional services of this specified type in the State of Texas and as a minimum shall have a minimum of one (1) professional engineer licensed in the State of Texas, with current registration, to perform such professional services. This engineer shall be personally responsible for developing the job site data as required in the test procedures outlined in these Specifications.

Further, the engineer shall be on site during the collection of data and shall personally supervise all TAB technicians during balancing operations.

C. The principals of the firm, and the persons performing the TAB, shall be either NEBB or AABC certified.

D. The Firm shall have operated a minimum of five years under its current Firm name, and shall be in good standing with the State of Texas, Franchise Tax Board.

E. The Firm shall be capable of performing the services specified at the location of the facility described within the time specified, preparing and submitting the detailed report of the actual field work performed, and following up the basic work as may be required.

F. All personnel working on the job site shall be either professional engineers or engineering technicians, who shall have been permanent, full time employees of the firm for a minimum of six (6) months prior to the start of work for this specific project.

G. **The TAB Firm shall submit biographical data on the individual proposed to directly supervise the TAB work, as well as other personnel scheduled to perform the technical work under the contract.** It shall also submit a background record of at least five years of specialized experience in the field of air system balancing, and shall possess properly calibrated instrumentation. The supervisory personnel for the TAB firm shall be registered engineers in the mechanical field and all of the employees used in the TAB firm shall be permanent, full-time employees of the firm.

1.7 DOCUMENTS

A. The TAB firm shall, as a requirement of the TAB contract, arrange with the Contractor to compile one set of mechanical specifications, all pertinent change orders, and the following:
   1. One complete set of Drawings
   2. One set of mechanical floor plans of the conditioned spaces. These Drawings shall be ozalid type (blue or black on light background) reproductions to facilitate marking
   3. Approved submittal data on equipment installed, and related changes as required to accomplish the test procedures outlined in the following specifications

1.8 RESPONSIBILITIES OF THE TAB FIRM

A. Check, adjust, and balance the components of the air conditioning system which will result in optimal noise, temperature, and airflow conditions in the conditioned spaces of the building while the equipment of the system is operating economically. This is intended to be accomplished after the system components are installed and operating as provided for in the contract documents. It is the responsibility of the Mechanical Contractor to place the equipment into service.

B. Liaison and Early Inspection:
   1. Inspect the installation of mechanical piping systems, sheet metal work, temperature controls and other component parts of the heating, air conditioning and ventilating systems during the construction stage for the proper arrangement and adequate provisions of the systems for ease of testing and balancing.
   2. After completing this review during the construction stage, the TAB Firm shall provide the Construction Inspector with a list of sequential steps that TAB will follow in performing the balancing operation. (It is not intended that this procedural schedule be as detailed as the "Basic Procedures" outlined in the AABC Standards Manual, for example.) A list of the significant operations that will be performed in the balancing process shall be provided. The purpose is to provide the Owner with an outline of the steps that the TAB Firm will follow so that he may be aware of the progress being made. It is understood that, as the balancing progresses, the TAB Firm may find it necessary to deviate from the scope and order in which the steps are listed; however, in general it will be expected that the TAB Firm will follow the provided schedule.

C. During the balancing process, as abnormalities and malfunctions of equipment or components are discovered by the TAB personnel, the Construction Inspector shall be advised in writing so that the condition can be corrected by the Construction Contractor. The written document need not be formal, but must be understandable and legible. If corrected prior to the completion of the TAB, data from malfunctioning equipment shall not be reported in the final TAB report. If not corrected, then the TAB report shall be annotated with all abnormalities listed clearly.

D. The TAB Report:
   1. The activities described in this section shall culminate in a report to be provided in triplicate to the Owner or his designated representative. The intent of the final report is to provide a reference of actual operating conditions for the Owner's operating personnel.
   2. All measurements and recorded readings (of air, water, electricity, etc.) that appear in the reports shall have been made onsite by the permanently employed technicians or engineers of the firm.
   3. At the option of the Construction Inspector, all data sheets tabulated each day by TAB personnel shall be submitted for initial by the Construction Inspector. Those work sheets so initialed, or copies thereof, shall be presented as a supplement to the final TAB report.
   4. The report shall be certified and approved by the previously described professional engineer of the firm and an original signed and dated seal shall appear on the first page of each copy, in compliance with the Texas Engineers Practice Act. The report shall be recorded on standard forms approved by the Owner.
   5. The TAB Report shall include the following as a minimum:
      a. PREFACE: A general discussion of the system, any idiosyncrasies, and any problems encountered, an outline of normal ventilation cycles of operation, and any noise problem not corrected.

b. PITOT TUBE TRAVERSES: For use in future troubleshooting by maintenance personnel, all exhaust ducts, main supply ducts, fume hoods and return ducts shall have air velocity and volume measured and recorded by the traverse method. Locations of these traverse test stations shall be described on the sheet containing the data.

c. TEMPERATURE TABULATION: Temperatures shall be recorded for each conditioned space on a room-by-room basis. Record outside ambient temperature at two hour intervals. The total variation in conditioned space temperatures shall not exceed 2 degrees variance from the thermostat settings.

d. AIR VOLUMES & VELOCITIES: Air volumes and velocities shall be measured at each supply grille, return air grille, and exhaust air grille or air handling device. In all fan systems, the air quantities indicated on the plans may be varied as required to provide a maximum temperature variation of two (2) degrees within each separately controlled space, but the total air quantity indicated for each zone must be obtained. It shall be the obligation of the Contractor to furnish or revise fan drive and/or motors if necessary, without cost to the Owner, to attain the specified air volumes.

e. STATIC PRESSURE DROPS: Static pressure gains or losses shall be measured across each supply fan, cooling coil, heating coil, return air fan, air handling unit filter and exhaust fan. These readings shall be graphically compared to the specific fan curve.

f. STATIC PRESSURES: Static pressures shall be measured and recorded for this report at the furthest air device (e.g. terminal unit) from the air handler supplying that device.

g. FAN SPEEDS: The operating speed of each fan shall be measured in RPM.

h. DRAWINGS: The Drawings mentioned above under "Documents" shall have each set of zone dampers and supply air openings numbered and/or lettered to correspond to the numbers and letters used on the report data sheets so that data in the report can be correlated with each specific supply air opening in the building. If room numbers actually used in the building differ from those on the plans, the building room numbers shall be marked on these Drawings. Only one such marked-up set of Drawings need be provided with the three copies of the TAB report.

6. Before final acceptance of the TAB report, the report data, at the discretion of the Owner, shall be verified and demonstrated one time on the job site by the TAB firm in the presence of the Architect's, Engineer's and the Owner's representatives. Representatives of the testing firm doing the work shall be present and provide the necessary equipment for test data verification. The Owner shall notify the Contractor of the acceptance of the report after clarification of any questions on the data recorded therein. This acceptance will terminate all bond and insurance requirements of TAB firm. Final acceptance of the report will culminate in the payment of the full amount of the TAB contract.

7. In order to permit the Construction Contractor time to work off TAB deficiency lists, the air balance firm shall provide for additional progress inspection visits to the project site from the start of balancing operations until completion.
8. The firm shall be responsible for inspecting, adjusting, balancing, and logging the data on the performance of all fans, all dampers in the duct system, all air distribution devices, the flows of steam or water through all coils, and the power consumption of all motors. The Contractor, Mechanical Contractor, the various Subcontractors involved, and the Suppliers of the equipment installed shall all cooperate with balancing firm to provide all necessary data on the design and proper application of the systemic components and shall furnish all labor and material required to eliminate any deficiency in performance.
9. During the TAB work, the temperature regulation shall be adjusted for proper relationship between controlling instruments. The Owner (Inspector) shall be advised of any instruments out of calibration so that the Controls Contractor may recalibrate the equipment, using data supplied by the balancing firm. After recalibration, room temperatures shall be measured again as described in "Temperature Tabulation" paragraph.
10. An additional inspection is required approximately ninety (90) days after occupancy of the building. The TAB firm shall insure that satisfactory performance is being maintained throughout and satisfy any unusual conditions.
11. An additional inspection in the building shall be made by the Firm during the season opposite that in which the initial adjustments were made (summer or winter). At that time any necessary modifications to the initial adjustment required to produce optimum operation of the system components shall be made to produce the proper seasonal conditions in each conditioned space. At the time of opposite season checkout, the Owner's Construction Inspector or Facility Superintendent, or both, shall be given timely notification before any readings or adjustments are made so that they may participate in the checkout.

PART 2 – PRODUCTS (Not Used)

PART 3 - EXECUTION (Not Used)

END OF SECTION

SECTION 16010

BASIC ELECTRICAL REQUIREMENTS

PART 1 - GENERAL

1.1 RELATED SECTIONS

A. Section 15050 – Basic Mechanical Requirements

B. Section 15920 – HVAC Control Wiring

1.2 WORK INCLUDES

A. The Contractor shall install, complete and operating, electrical systems consisting of the following :

1. Complete distribution for power and lighting as shown on plans, including switches and circuit breakers, feeders, sub feeders, grounding, switchboards, transformers, generators, transfer switches, panelboards, branch circuits, line voltage control wiring, switches and receptacles, telecommunications equipment, and all other electrical or telecommunications equipment shown on drawings.
2. Contractor shall make all final connections to equipment furnished by other trades.
3. Contractor shall make all connections to all motors, electrically operated equipment and line voltage controls.
4. All conduits, sleeves and support systems required for all systems and all cable trays.
5. Temporary electrical power and lighting shall be furnished, installed and maintained for all trades. Building lighting may be used as construction lighting only after it is permanently installed.
6. Miscellaneous items obviously required for a complete and operating system but not specifically called for on the drawings or in the specifications shall be provided by the Contractor at no extra cost to the Owner (nuts and bolts, masonry anchors, conduit and equipment supports, drilling welding, scaffolding, crane service, etc.).

1.3 REFERENCES, STANDARDS, AND REGULATORY REQUIREMENTS: The following state and local codes, ordinances, and industry standards shall be complied with on this project as applicable:

A. The “Authority Having Jurisdiction” over the project described by these documents is the Owner, Texas Department of Transportation, as an Agency of the State of Texas. As such, it is required that the installation shall meet the minimum standards prescribed in the latest editions of the following listed codes and standards, which are made a part of these Specifications.

B. American National Standards Institute (ANSI): All current editions of applicable manuals and standards

C. Underwriters' Laboratories (UL)

D. Insulated Cable Engineers Association (ICEA)

E. Institute of Electrical and Electronic Engineers (IEEE)

F. American Society of Testing Materials (ASTM): All current editions of applicable manuals and standards.

G. National Fire Protection Association Standards (NFPA):
1. NFPA No. 70, National Electrical Code
2. NFPA No. 90A, Air Conditioning Systems
3. NFPA No. 91, Blower & Exhaust Systems
4. NFPA No. 101, Life Safety Code
5. NFPA No. 241, Standard for Safeguarding Construction, Alteration and Demolition Operations
6. NFPA No. 255, Method of Test of Surface Burning Characteristics of Building Materials
7. NFPA No. 258, Standard Research Test Method for Determining Smoke Generation of Solid Materials

H. National Electrical Manufacturers' Association (NEMA): All current editions of applicable manuals and standards.

I. Local Fire Department and the State Fire Marshall, as may be applicable to construction on this site

J. Occupational Safety and Health Act (OSHA): All applicable safety standards

K. Texas Occupational Safety Act: All applicable safety standards

L. International Building Code, latest edition

M. Refer to Specification Sections hereinafter bound for additional Codes and Standards

N. All materials and workmanship shall comply with all applicable state and national codes, Specifications, and industry standards. In all cases where Underwriters' Laboratories, Inc. has established standards for a particular type material, such material shall comply with these standards. Evidence of compliance shall be the UL "label" or "listing" under Re-Examination Service.

1.4 GENERAL MATERIALS AND EQUIPMENT REQUIREMENTS

A. Note that no asbestos-bearing, or solvent based, or lead containing materials shall be used on this project. If any prohibited materials are installed, all of the material, including the underlying material, shall be removed and disposed of as required by local, state, and federal requirements.

B. The Contractor shall be responsible for fitting the material and apparatus specified in this division into the building and shall carefully lay out the specified work at the site to

conform with the structural conditions, to avoid all obstructions, to conform to the details of the installation and thereby to provide an integrated installation operating as a complete set of systems.

C. Verification of Dimensions: The Contractor shall be responsible for the coordination and proper relation of his work to the building structure and to the work of all trades. The Contractor shall visit the premises and become thoroughly familiarize with all details of the work and working conditions, to verify all dimensions in the field, and to advise the Design Engineer of any discrepancy before performing any work. Adjustments to the work required in order to facilitate a coordinated installation shall be made at no additional cost to the Owner or the Design Engineer.

D. The Electrical Drawings are necessarily diagrammatic by their nature, and are not intended to show every connection in detail or every pipe or conduit in its exact location. These details are subject to the requirements of standards referenced elsewhere in these specifications, and structural and architectural conditions. The Contractor shall carefully investigate structural and finish conditions and shall coordinate the separate trades in order to avoid interference between the various phases of work. Work shall be organized and laid out so that it will be concealed in furred chases and suspended ceilings, etc., in finished portions of the building, unless specifically noted to be exposed. All work shall be installed parallel or perpendicular to the lines of the building unless noted otherwise.

E. When the Drawings do not give exact details as to the elevation of conduit and cable trays, the Contractor shall physically arrange the systems to fit in the space available at the elevations intended with proper clearances. Exposed conduit and the cable tray systems are generally intended to be installed true and square to the building construction, and located as high as possible against the structure in a neat and workmanlike manner. The Drawings do not show all required offsets, and other location details. Work shall be concealed in all finished areas.

F. Storage at Site: The Contractor shall not receive material or equipment at the job site until there is suitable space provided to properly protect equipment from rust, drip, humidity, and dust damage.

G. Capacities shall be not less than those indicated but shall be such that no component or system becomes inoperative or is damaged because of startup or other overload conditions.

H. Conformance with Agency Requirements: Where materials or equipment are specified to be approved, listed, tested, or labeled by the Underwriters' Laboratories, Inc. (UL), the Contractor shall submit proof that the items furnished under this Section of the Specifications conform to such requirements. The label of the Underwriters Laboratories, Inc., applied to the item will be acceptable as sufficient evidence that the items conform to such requirements.

I. Nameplates: Each major component of equipment shall have the Manufacturer's name, address, and catalog number on a plate securely attached to the item of equipment. All data on nameplates shall be legible at the time of Final Inspection. Under no circumstances shall any nameplate be painted over for any reason. If a new or existing

nameplate is painted over, the nameplate shall be restored to as new condition, or replaced with a new nameplate provided by the Manufacturer.

J. Prevention of Rust: Standard factory finish will be acceptable on equipment specified by model number; otherwise, surfaces of ferrous metal shall be given a rust inhibiting coating. The treatment shall withstand 200 hours in salt spray fog test, in accordance with Method 6061 of Federal Standard No. 141. Immediately after completion of the test, the specimen shall show no signs of wrinkling or cracking and no signs of rust creepage beyond 1/8" on either side of the scratch mark. Where rust inhibitor coating is specified hereinafter, any treatment that will pass the above test is acceptable unless a specific coating is specified except that coal tar or asphalt type coating will not be acceptable unless so stated for a specific item. Where steel is specified to be hot-dip galvanized, mill-galvanized sheet steel may be used provided all raw edges are painted with a zinc-pigmented paint conforming to Military Specification MIL-P-26915.

1.5 DEFINITIONS (Note: These definitions are included here to clarify the direction and intention of this specification. The list given here is not by any means complete. For further clarification as required, Contractor shall contact the designated owner's representative.)

A. ARCHITECT (or DESIGN ARCHITECT): The "Architect" or "Design Architect" is defined as the architect whose seal appears on the construction specifications title page and on the drawings for the particular area under consideration.

B. AUTHORITY HAVING JURISDICTION: The Texas Department of Transportation, as an agency of the State of Texas is the "Authority Having Jurisdiction" in any matter of code assignment, interpretation, etc., as applies to this project. In many cases, at the Owners option, the Authority Having Jurisdiction may choose to apply the policies and procedures of an Authority not having jurisdiction, and as such, delegate its authority over some issues. In the event that some of its authority has been delegated to another Authority, such delegation will be specifically delineated in these specifications. In many instances the sections of the specifications will include references which will indicate codes, standards, and regulations which have bearing on the project, and will be enforced by the AUTHORITY HAVING JURISDICTION. The Owner may, at its option and at any time, defer to a local jurisdiction as the AUTHORITY HAVING JURISDICTION. This action, if taken, shall not subrogate any of the authority of the Owner, nor have any bearing on other unrelated requirements of these specifications.

C. CONCEALED: "Concealed" areas are those areas which cannot be seen by the building occupants, such as inside walls or above ceilings.

D. ENGINEER (or DESIGN ENGINEER or ENGINEER OF RECORD): The "Engineer" or "Design Engineer" or "Engineer of Record" is defined as the engineer whose seal appears on the construction specifications title page and on the drawings for the particular area under consideration. Note that in some cases, the work of two or more Engineers may appear on the same drawing or document. In that case, the area of responsibility of each Engineer will be noted in the area of each signed seal.

E. EXPOSED: “Exposed” areas are all areas which are exposed to view by the building occupants, including under counters, inside cabinets and closets, plus all mechanical and electrical rooms.

F. OWNER: As used in these specifications, “Owner” means the Texas Department of Transportation, as represented by the assigned designee.

G. INDICATED: The term "indicated" is a cross reference to graphic representations, notes or schedules on drawings, to other paragraphs or schedules in the Specifications, and to similar means of recording requirements on contract documents. Where terms such as "shown", "noted", "scheduled", and "specified" are used in lieu of "indicated", it is for the purpose of helping reader locate the cross reference, and no limitation of location is intended except as specifically noted.

H. DIRECTED, REQUESTED, etc.: Where not otherwise explained, terms such as "directed", "requested", "authorized", "selected", "approved", "required", "accepted", and "permitted" mean directed by Architect/Engineer", "requested by Architect/Engineer" and similar phrases. However, no such implied meaning will be interpreted to extend Architect's/Engineer's responsibility into Contractor's area of construction supervision and job safety.

I. AND/OR: Where "and/or" is used in these Specifications or on the Drawings, it shall mean "that situations exist where either one or both conditions occur or are required and shall not be interpreted to permit an option on the part of the Contractor.

J. APPROVE: Where used in conjunction with Architect's/Engineer's response to submittals, requests, applications, inquiries, reports and claims by Contractor, the meaning of term "approved" will be held to limitations to Architect's/Engineer's responsibilities and duties as specified in General and Supplementary Conditions. In no case will "approval" by Architect/Engineer be interpreted as a release of Contractor from responsibilities to fulfill requirements of contract documents or to extend Architect's/Engineer's responsibility into Contractor's area of construction supervision and job safety.

K. AS REQUIRED: Where "as required" is used in these Specifications or on the drawings, it shall mean "that situations exist that are not necessarily described in detail or indicated that may cause the Contractor certain complications in performing the work described or indicated. These complications entail the normal coordination activities expected of the Contractor where multiple trades are involved and new or existing construction causes deviations to otherwise simplistic approaches to the work to be performed. The term shall not be interpreted to permit an option on the part of the Contractor to achieve the end result."

L. FURNISH:

1. The term "furnish" is used to mean "supply and deliver to project site, ready for unloading, unpacking, assemble, installation, and similar operations."
2. Where "furnish" applies to work for which the installation is not otherwise specified, "furnish" in such case shall mean "furnish and install."

M. INSTALL: The term "install" is used to describe operations at project site including "unloading, unpacking, assembly, erection, placing, anchoring, applying, working to dimension, finishing, curing, protecting, cleaning and similar operation."

N. PROVIDE: The term "provide" means "to furnish and install, complete and ready for intended use."

1.6 UTILITY CONNECTIONS AND INSPECTIONS

A. General: Refer to DIVISION 1 for construction phasing and time increments.

B. Fees and Costs: If, during the course of the construction, a need arises to buy utilities, the Contractor shall pay all fees attendant thereto. If the City or other privately or publicly owned utility piping or electrical cable needs to be extended, relocated, or terminated, the Contractor shall pay all permits and construction/inspection fees associated with that particular work, the costs for which shall be included in the Contract price, including the cost of setting meters.

C. All work performed on this project is under the authority of the State of Texas, however, some local construction fees or construction or inspection permits may be required for new service connections, or modified connections to City or utility company controlled services. Refer to the Division 1 Section of specifications on “Special Conditions” for clarification, or contact the regulating entity directly. Note also that if inspections by personnel of jurisdictions other than TxDOT are specifically required by this document, then the Contractor is responsible for any fees or permits in connection to those requirements.

D. Compliance: The Contractor shall comply in every respect with all requirements of the National Fire Protection Association, the local Fire Department requirements and all utility company requirements. In no case does this relieve the Contractor of the responsibility of complying with these Specifications and Drawings where specified conditions are of higher quality or quantity than the requirements of the above-specified authorities. Where requirements of the Specifications and Drawings are more lenient than the requirements of the above authorities, the Contractor shall make installations in compliance with the requirements of the above authorities with no extra compensation.

1.7 COORDINATION OF THE CONTRACT DOCUMENTS

A. The interrelation of the Specifications, the Drawings, and the schedules are as follows: The Specifications determine the nature and quality of the materials, the Drawings establish the quantities, dimensions and details, and the schedules give the capacities and performance characteristics. If the Contractor requires additional clarification, a request shall be submitted in writing, and a response will be given in writing.

B. Should the Drawings or Specifications conflict within themselves, or with each other, the requirement with the greatest quantity and/or the highest quality shall prevail. The decision of the engineer of record for the system being installed shall be final.

1.8 FUTURE WORK

A. The work described in the drawings shall be performed under this contract. It shall be noted that certain equipment and systems have been sized to anticipate a possible future addition to the building. It is imperative that the Contractor provide and install the equipment and systems as shown in the drawings and schedules, of the sizes, capacities and dimensions indicated.

1.9 SUBMITTALS

A. Submit under provisions of UGC (the "Uniform General Conditions") and Special Conditions Section of the Specifications.

B. Mark all submittal literature to indicate the precise selection of materials and equipment being submitted. Note that if the specific model or material is not indicated in the submittal, and there is more than one choice possible, the submittal may be rejected and resubmittal will be required.

C. Changes in Contract requirements will not be granted and shall not be implied by approval of submitted alternative materials and equipment. Changes will only be effected through the Change Order process, in writing.

D. Proposed Products List: Include all equipment and materials specified in Section 16011.

E. Submit shop drawings and product data grouped to include complete submittals of related systems, products, and accessories in a single submittal.

F. Submit Fabrication Drawings whenever (1) equipment proposed varies in physical size and arrangement from that indicated on the Drawings, thus causing rearrangement of equipment space, (2) where tight spaces require extreme coordination between ductwork, piping, conduit, and other equipment, (3) where called for elsewhere in these Specifications; and (4) where specifically requested by the Design Engineer. Fabrication Drawings shall be made at no additional charge to the Owner or the Design Engineer.

G. All required Fabrication Drawings, except as noted otherwise, shall be prepared at a scale of not less than 1/4" = 1'-0". Fabrication Drawings for ductwork and air handling units shall be drawn at a minimum scale of 3/8" = 1'-0". Submit three blueline prints of each Fabrication Drawing to the Design Engineer for review. Reproduction and submittal of the Construction Documents is not acceptable. The Engineer will review the drawing and return one print with comments.

1.10 SUBSTITUTION OF MATERIALS AND EQUIPMENT

A. It is not the intent of the Drawings and/or Specifications to limit products to any particular Manufacturer or to discriminate against an "APPROVED EQUAL" product produced by another Manufacturer. Some products of a particular Manufacturer may be mentioned to set a definite standard for acceptance and to serve as a reference in comparison with other products. On the other hand, when a Manufacturer's name appears in these Specifications or in the Drawings, it shall not be interpreted that the Manufacturer is unconditionally acceptable as a provider of equipment for this project.

The successful Manufacturer or Supplier shall meet all of the provisions of the appropriate specification(s).

B. The specified products have been used in preparing the Drawings and Specifications and thus establish minimum qualities with which substitutes must be at least equal to be considered acceptable. The burden of proof of equality rests with the Contractor. The decision of the Engineer is final.

C. In the event that the Contractor submits a proposal for a substitution, and the review and negotiation of the substitution (if handled in a timely, expedited manner) results in a delay of the contract work, then a reasonable extension of time for the contract may be allowed.

1.11 MATERIALS AND WORKMANSHIP

A. All materials, unless noted otherwise, shall be new, free from all defects, suitable for the intended use, and of the best quality of their respective kinds.

B. Materials and equipment shall be installed in accordance with the Manufacturer's recommendations and the best standard practice for the type of work involved.

C. All work shall be executed by mechanics and Contractors skilled in their respective trades, and the installations shall provide a neat, precise appearance.

D. Materials and/or equipment damaged in shipment or otherwise damaged prior to installation shall not be repaired at the job site but shall be replaced with new materials and/or equipment.

E. Similar equipment shall be products of the same Manufacturer. Materials shall be new of standard current products of Manufacturer's latest design. All components by the same Manufacturer shall be mechanically and electrically compatible with rating of apparatus in which installed. Similar equipment shall be identical. For example, all panelboards shall be of the Manufacturer and of the same style.

1.12 FLAME SPREAD PROPERTIES OF MATERIALS

A. Materials and adhesives incorporated into this project shall conform to NFPA Standard 255, "Method of Test of Surface Burning Characteristics of Building Materials". The classification shall not exceed a flame spread rating of 25, nor exceed a smoke developed rating of 50, for all materials, adhesives, finishes, etc., specified for each system.

1.13 MANUFACTURER'S RECOMMENDATIONS

A. The Manufacturer's published directions and/or recommendations shall be followed in the delivery, storage, protection, installation, and wiring of all equipment and material. The Contractor shall promptly notify the Engineer, in writing, of any conflict between the requirements of the Contract Documents and the Manufacturers' directions, and shall obtain the Engineer's guidance before proceeding with the work. Should the Contractor perform any such work that does not comply with the Manufacturers' directions or such

instructions from the Owner, the Contractor shall bear all costs arising in connection with the deficiencies.

1.14 SPACE AND EQUIPMENT ARRANGEMENT

A. The size of electrical equipment indicated on the Drawings is approximate and based on the dimensions of a particular Manufacturer. While other Manufacturers may be acceptable, it is the responsibility of the Contractor to determine if the equipment proposed by the Contractor will fit in the space.

B. All equipment shall be installed in a manner to permit access to all surfaces. All nameplates shall be able to be viewed without disassembly.

C. All equipment and piping shall be installed in a manner to provide the greatest amount of clearance for access and maintenance of systems and equipment. Installation of conduit and panels which blocks personnel access to all parts of chases or mechanical spaces is prohibited.

1.15 PROTECTION

A. The Contractor shall at all times take such precautions as may be necessary to properly protect all materials and equipment from damage from the time of delivery until the completion of the work. This shall include the erection of all required temporary shelters and supports to adequately protect any items stored in the open on the site from the weather, the ground and surrounding work; the cribbing of any items above the floor of the construction; and the covering of items in the incomplete building with tarpaulins or other protective covering; the installation of electric heaters in electrical switchgear and similar equipment to prevent moisture damage. Failure on the part of the Contractor to comply with the above will be sufficient cause for the rejection of the items in question.

B. Take particular care not to damage the building structure in performing work. All finished floors and finished surfaces shall be covered to prevent any damage by workers or their tools and equipment during the construction of the building.

1.16 SUPERVISION

A. Each Contractor and Subcontractor shall provide a competent superintendent or foreman for the work of their trade. (Refer also to the Uniform General Conditions for additional information concerning supervision.)

B. It shall be the responsibility of the General to assure that each superintendent studies all Drawings and is familiar with the work to be coordinated with and performed by other trades. The General Contractor shall coordinate the work of all trades and, before material is fabricated or installed, assure that the work will not cause an interference with another trade. Where interferences are encountered, they shall be resolved at the job site by the superintendents involved. Where interferences cannot be resolved without major changes to the Drawings, the matter shall be referred to the Engineer for a ruling. The decision of the Engineer shall be final.

1.17 SITE OBSERVATION

A. Site observation by the Architect, Engineer, Owner or any representative of the Owner, is for the express purpose of verifying compliance by the Contractor with the Contract Documents, and shall not be construed as construction supervision nor indication of approval of the manner or location in which the work is being performed as being a safe practice or place.

B. The safety of the workers on the site is the responsibility of the Contractor. By entering the site, the Contractor, Subcontractors, and their employees relieve the Owner of any responsibility for their safety, and accept complete responsibility for any unsafe acts or procedures which may cause them harm.

1.18 GUARANTEE

A. **The Contractor shall guarantee all labor and materials furnished and installed under this contract for a period of one (1) year from date of FINAL ACCEPTANCE by Owner.** Certain work and materials shall be guaranteed for a longer period when so specified. The guarantee shall cover the repair or replacement without additional cost to the Owner, of any defective material or faulty workmanship.

B. All necessary service to each system, such as adjustment of controls, mechanical repair of equipment and other work requiring specialized training, shall be furnished by the Contractor, at no cost to the Owner, for a period of one (1) year, concurrent with the warranty period specified above. This shall not include repair of damage due to fire unless the fire results from faulty materials or workmanship on the part of the Contractor, storm, vandalism, or other factors entirely beyond the control of the Contractor, nor shall it include such routine service as oiling motors, cleaning or replacing filters, replacing blown fuses (unless caused by defective performance of the equipment), nor any other work not requiring special skill. The above items pertaining to routine servicing of the equipment and motors, cleaning or replacing filters, or replacing fuses are the responsibility of the Owner unless a service agreement is made between the Contractor and the Owner.

C. If the Contractor shall fail to perform under these requirements, then the Uniform and Special General Conditions shall govern any required remedies the Owner may be forced to take.

1.19 CUTTING AND PATCHING

A. General: Provide openings in all new or existing construction indicated in the drawings, or as necessary for the proper installation of all systems included in the project.

B. Methods of cutting: Openings cut through concrete and masonry shall be made with masonry saws and/or core drills and at such locations acceptable to the Construction Inspector and Design Engineer. Impact-type equipment shall not be used except where specifically acceptable to the Design Architect and Engineer. Openings in precast concrete slabs for conduits, outlet boxes, etc., shall be core drilled to exact size.

C. Restoration: All openings shall be finished, closed around penetrating materials as specified, or restored to "as-new" condition under the appropriate Specification Section for the materials involved, and shall match remaining surrounding materials and/or finishes.

D. Masonry: Where openings are cut through masonry walls, provide and install lintels or other structural supports to protect the remaining masonry. Adequate supports shall be provided during the cutting operation to prevent any damage to the masonry occasioned by the operation. All structural members, supports, etc., shall be of the proper size and shape, and shall be installed in a manner acceptable to the Design Engineer.

E. Plaster: All mechanical work in areas containing plaster shall be completed prior to the application of the finish plaster coat. Cutting of finish plaster coat will not be permitted.

F. Special Note: No cutting, boring, or excavating which will weaken the structure shall be undertaken.

G. Refer to Specification Division 2 for requirements governing trenching.

1.20 ROOF PENETRATIONS AND FLASHING

A. Conduit and duct sleeves, pitch pockets, and flashings compatible with the roofing installation shall be provided and installed by a qualified Contractor for all roof penetrations. This shall be the responsibility of the General Contractor.

1.21 OPERATION PRIOR TO COMPLETION

A. When any piece of electrical equipment is operable and it is to the advantage of the Contractor to operate the equipment for a purpose other than testing (for a period longer than one hour), the Contractor may do so, providing that the operation is properly supervised, and the Construction Inspector has given written permission. The warranty period shall not commence until such time as the equipment is operated for the beneficial use of the Owner, or date of substantial completion, whichever occurs first.

B. No equipment shall be operated, even for test purposes, until it has been thoroughly swept and vacuumed clean of dust, dirt and debris.

C. Regardless of whether or not the equipment has or has not been operated, the Contractor shall properly clean the equipment, install clean filters, properly adjust, and complete all deficiency list items before final acceptance by the Owner as described in the following paragraph. The date of acceptance and performance certification shall be the same date.

1.22 CHECKING AND TESTING MATERIALS AND/OR EQUIPMENT

A. Before the work is accepted, an authorized representative of the Manufacturer of the installed materials and/or equipment shall personally inspect the installation and operation of the materials and/or equipment to determine that it is properly installed and in proper operating order. The qualifications of the representative shall be appropriate to the technical requirements of the installation and shall be submitted to the owner for approval. The decision of the owner concerning the appropriateness of the representative

shall be final. Testing and checking shall be accomplished during the course of the work where required by work being concealed, and at the completion of the work otherwise. In addition, the Contractor shall submit to the Design Engineer all close out documents listed in Section 16011.

1.23 CLEANING AND PAINTING

A. All equipment furnished by the mechanical Subcontractors shall be delivered to the job with a suitable factory protective finish. The following materials shall not be painted: copper, galvanized metal, stainless steel, fiberglass, and plastics such as PVC, PVDF, polypropylene, etc.

B. If painting is required, before painting, materials and equipment surfaces shall be thoroughly cleaned of cement, plaster, and other foreign materials, and all oil and grease shall be removed. Such surfaces shall be carefully wiped and all cracks and corners scraped out. Exposed metal work shall be carefully brushed down with steel brushes to remove rust and other spots and left smooth and clean.

C. Equipment nameplates shall be protected from being painted; suitable protection shall be afforded to the plates to prevent their being rendered illegible due to the painting operation, or receiving any overspray or spatter.
1. All uncovered, unprotected steel supports and hanger rod threads shall be cleaned and painted with two coats of Tropical Paint Co. No. 77-black asphaltic emulsion. Galvanized steel conduit shall not be painted.
2. The surfaces to be finish painted shall first be prepared as follows:
3. All ferrous metal surfaces without a protective finish and not galvanized in exposed and concealed areas including chases, and above ceilings shall be painted with two (2) coats of P&L zinc chromate primer as the construction progresses to protect against oxidation and deterioration.

PART 2 - PRODUCTS (Not Used)

PART 3 - EXECUTION

3.1 INSTALLATION METHODS

A. Support: All wiring, cable trays and conduits shall be adequately and properly supported from the building structure by means of hanger rods or clamps fastened to the building structure as herein specified.

B. All conduits, etc., shall be cut accurately to measurements established from the actual building conditions and shall be worked into place without springing or forcing. All conduits run exposed in machinery and equipment rooms shall be installed parallel to the building lines. Conduits run in furred ceilings, etc., shall be similarly installed, unless noted otherwise. Conduits in furred ceilings and in other concealed spaces shall be neatly grouped and racked. All conduit openings shall be maintained in a sealed condition until the systems are closed with final connections.

C. All openings through all floors, walls, and roofs, etc., regardless of material for the passage of conduit, cable trays, etc., shall be sleeved. All penetrations must pass through sleeves. Sleeves shall be set in new construction before concrete is poured, as cutting holes through any part of the concrete will not be permitted unless acceptable to the Architect/Engineer. Installation of sleeves and the sealing of sleeves shall be the responsibility of the electrical Contractor except roof sleeves.

3.2 REQUIRED INSPECTIONS

A. Prior to the installation of any ceiling material, gypsum, plaster, or acoustical board, the Contractor shall notify the construction inspector so that arrangement can be made for an inspection of the above-ceiling area about to be “sealed” off. The Contractor shall give as much advance notice as possible, but no less than five (5) working days.

B. All above-ceiling areas will be subject to a formal inspection before ceilings are installed, or installation is otherwise concealed from view. All electrical work at and above the ceiling, including items supported by the ceiling grid, such as lighting fixtures, shall be complete and installed in accordance with contract requirements, including power to lighting fixtures, fans, and other powered items and all conduit supports. Adequate lighting shall be provided to permit thorough inspection of all above-ceiling items. The inspection will include representatives of the following: General Contractor and each Subcontractor having work above the ceiling, Engineer(s) of Record, Construction Inspector(s), and the Maintenance Staff. Areas to be included and time of inspection shall be coordinated with the Construction Inspector.

C. The purpose of this inspection is to verify the completeness and quality of the installation of the electrical systems and any other special above ceiling systems. The ceiling supports (tee bar or lath) shall be in place so that access panel and light fixture locations are identifiable and so that clearances and access provisions may be evaluated.

D. No ceiling materials may be installed until the resulting deficiency list from this inspection is satisfied and the Construction Inspector has given approval.

3.3 TESTING

A. Tests for specific systems and equipment are specified in associated specification sections or in the drawings. All tests specified or indicated shall be performed and witnessed by the Owner. All tests shall be individually documented, and the test report for each shall be included in the final documentation submitted to the Owner at the completion of the project. Data shall be delivered to the Design Engineer as specified under “Requirements for Final Acceptance”. The documentation shall include as a minimum:
   1. Contractor firm name, supervisor’s name, and name of personnel performing test
   2. Date and time of beginning of test, and date and time of test completion
   3. Description of equipment or system being tested
   4. Description of test being performed
   5. Description of outcome of test
   6. Dated signatures of person performing test, Contractor’s supervisor, and Owner’s representative, including legibly printed names and titles

B. The Contractor shall make, at no additional cost to the Owner, any tests deemed necessary by the inspection departments having jurisdiction, and in the National Fire Protection Association, ASTM, etc. Standards listed. The Contractor shall provide all equipment, materials, and labor for making such tests. Reasonable amounts of fuel and electrical energy costs for system tests will be paid by the Owner where services are readily available. Where such services are not readily available, the Contractor shall provide all water, electricity or fuel. NOTE THAT SUCH TESTS WILL BE REASONABLY REQUIRED TO CONFIRM THE SPECIFIED OPERATION, CAPACITY, OR DURABILITY OF THE MATERIAL OR EQUIPMENT, AND WILL NOT BE INVOKED UNLESS DEEMED ABSOLUTELY NECESSARY.

C. The Construction Inspector shall be notified in writing at least 5 working days prior to each test and other Specification requirements requiring action on the part of the Construction Inspector. All equipment shall be placed in operation and tested for proper automatic control requirements before the balancing agency starts their work.

D. Insulation resistance test shall be made on each 208 volt feeder conductor after installation. Tests shall be made with a 500 vdc megger. Readings shall be recorded and test reports furnished as described in this section.

E. All defective lamps found during testing shall be replaced.

F. All receptacles and light switches shall be tested to verify they are connected properly.

G. All HVAC motors and line voltage controls shall be checked to verify correct operation.

H. All panelboards shall be inspected prior to installing covers to verify correct wiring connections and color coding procedures.

3.4 TRAINING

A. Prior to final acceptance of the project, Contractor shall provide a minimum of six (6) hours of training for a minimum of four (4) of the Owners personnel, on the operation and maintenance of the existing systems, including normal maintenance procedures and the location and operation of emergency shut down switches, etc. Contractor shall provide complete, written, Manufacturers literature on all electrical systems for each person trained.

END OF SECTION

SECTION 16011

ELECTRICAL SUBMITTAL AND CLOSE OUT DOCUMENTS

PART 1 - GENERAL

1.1 RELATED SECTIONS

A. Section 16060 – Grounding & Bonding

B. Section 16070 – Hangers and Supports

C. Section 16075 – Electrical Identification

D. Section 16123 – Building Wire and Cable

E. Section 16130 – Raceway and Boxes

F. Section 16140 – Wiring Devices

G. Section 16150 – Wiring Connections

H. Section 16235 – Engine Generators

I. Section 16289 – TVSS

J. Section 16411 – Enclosed Switches

K. Section 16442 – Panelboards

L. Section 16491 – Fuses

M. Section 16510 – Interior Luminaires

N. Section 16520 – Exterior Luminaires

O. Section 16530 – Emergency Lighting

P. Section 16710 – Telecommunications

Q. Section 16722 – Gas Monitoring

1.2 WORK INCLUDES

A. The Contractor shall provide equipment submittal data as summarized in 1.3. The complete requirements are listed in the referenced Division 16 section.

B. The Contractor shall provide close out data as summarized in 1.4. The complete requirements are listed in the referenced Division 16 section.

1.3 SUBMITTAL SUMMARY

A. Section 16060 – Grounding and Bonding
   1. Product Data: Submit data on grounding electrodes and connections.
   2. Test Reports: Provide grounding system test reports.

B. Section 16070 – Hangers and Supports
   1. Product Data: Submit Manufacturers catalog data including load capacity.
   2. Provide Manufacturer's Installation Instructions.
   3. Manufacturer's Certificate: Certify products meet or exceed specified requirements.

C. Section 16075 – Electrical Identification
   1. Product Data: Submit Manufacturer’s catalog literature for each product used on the project.
   2. Manufacturer's Installation Instructions: Indicate installation instructions, special procedures, and installation.

D. Section 16123 – Building Wire and Cable
   1. Product Data: Submit for building wire and cable.

E. Section 16130 – Raceway and Boxes
   1. Product Data: Submit for the following:
      a. Flexible metal conduit
      b. Liquid tight flexible metal conduit
      c. Nonmetallic conduit
      d. Raceway fittings
      e. Conduit bodies
      f. Wireway
      g. Pull and junction boxes
   2. Manufacturer's Installation Instructions: Submit application conditions and limitations of use stipulated by Product testing agency specified under Regulatory Requirements. Include instructions for storage, handling, protection, examination, preparation, and installation of Product.

F. Section 16140 – Wiring Devices
   1. Product Data: Submit Manufacturer's catalog information showing dimensions, colors, and configurations.

G. Section 16150 – Wiring Connections
   1. Product Data: Submit wiring device Manufacturer’s catalog information showing dimensions, configurations, and construction.
   2. Provide Manufacturer's installation instructions.

H. Section 16235 – Engine Generators
   1. Shop Drawings: Indicate electrical characteristics and connection requirements. Include plan and elevation views with overall and interconnection point dimensions, fuel consumption rate curves at various loads, ventilation and combustion air requirements, electrical diagrams including schematic and interconnection diagrams.
   2. Product Data: Submit data showing dimensions, weights, ratings, interconnection points, and internal wiring diagrams for engine, generator, control panel, transfer

switch, battery, battery rack, battery charger, exhaust silencer, and vibration isolators.

3. Test Reports: Indicate results of performance testing.
4. Manufacturer's Field Reports: Indicate inspections, findings, and recommendations.

I. Section 16289 – TVSS
   1. Product Data: Submit capacity, dimensions, weights, details, and wiring configuration.
   2. Test Reports:
      a. Indicate Let-Through voltage test data.
      b. Submit spectrum analysis of each unit.
      c. Submit test reports from nationally recognized independent testing laboratory verifying suppressors can survive published surge current rating.
      d. Manufacturer's Installation Instructions: Submit installation instructions and connection requirements.
      e. Manufacturer's Certificate: Certify transient voltage surge suppression device complies with UL 1449 Second Edition Surge Voltage Ratings.

J. Section 16411 – Enclosed Switches
   1. Product Data: Submit switch ratings and enclosure dimensions.

K. Section 16442 – Panelboards
   1. Shop Drawings: Indicate outline and support point dimensions, voltage, main bus ampacity, integrated short circuit ampere rating, circuit breaker and fusible switch arrangement and sizes.
   2. Product Data: Submit catalog data showing specified features of standard products.

L. Section 16491 – Fuses
   1. Product Data: Submit data sheets showing electrical characteristics, including time-current curves.

M. Section 16510 – Interior Luminaires
   1. Shop Drawings: Indicate dimensions and components for each luminaire not standard product of Manufacturer.
   2. Product Data: Submit dimensions, ratings, and performance data.

N. Section 16520 – Exterior Luminaires
   1. Product Data: Submit dimensions, ratings, and performance data.

O. Section 16530 – Emergency Lighting
   1. Product Data: Submit dimensions, ratings, and performance data.

P. Section 16710 – Telecommunications
   1. Prior to ordering any material, provide two (2) copies of complete brochure information on all products for installation on this project. All brochures and specification sheets shall be bound within a three-ring loose leaf binder and organized in the same manner as the Products portion of the Specifications. If more than one product is listed on the same page of the brochure or specification sheet submitted, the intended product or part number shall be clearly indicated or highlighted by the Contractor.

2. Contractor shall submit Proposed Test Procedures and a sample of the printout or test result form, as well as a list of all Test Equipment to be used for cable testing.
3. Contractor shall submit a Proposed Labeling and Cable Identification Scheme describing the outlet labeling, patch panel labeling, fiber patch panel labeling, voice termination labeling, and all cable end labeling procedures and samples.
4. Contractor shall submit all Proposed Firestopping System plans and methods for approval prior to beginning the firestopping portion of the work.

Q. Section 16722 – Gas Monitoring
1. Product Data: Provide Manufacturers data on all equipment and components described herein.
2. Submittal shall include Manufacturer's Installation Instructions and complete system wiring and central control station schematics.

1.4 CLOSEOUT SUBMITTALS: The items summarized below must be complete before the electrical portion of the project will be considered substantially complete. See reference sections for complete details. See section 16010 for complete test reporting procedures.

A. Section 16060 – Grounding and Bonding
1. Project Record Documents: Record actual locations of components and grounding electrodes.
2. Perform ground resistance testing in accordance with IEEE 142.
3. Perform continuity testing in accordance with IEEE 142.
4. When improper grounding is found on receptacles, check receptacles in entire project and correct. Perform retest.
5. All new ground rods shall be tested after installation using a ground rod resistance tester. The maximum resistance for each ground rod shall be no more than 25 ohms, as required by the NEC. After the ground rod resistance test, if the ground rod has a resistance higher than 25 ohms, the Contractor will need to modify the ground system to lower this resistance. To lower the resistance, the Contractor shall drive and interconnect additional ground rods in a triad formation, install longer ground rods or use manufactured, encapsulated electrolyte ground rods to obtain a resistance of 25 ohms or less. Manufactured, electrolyte ground rods shall be equal to Lyncole XIT Grounding Systems. For a multiple ground rod installations, rods shall be spaced 10' apart and #1/0 AWG or larger bare, copper conductors shall be installed underground between rods, minimum 18” below grade. After corrective measures are complete, the new ground rod installation shall be re-tested with a ground rod tester to show that each installation has a total resistance of 25 ohms or less. **Ground rod resistance test results shall be documented, signed by the licensed electrician performing the tests, and submitted to the Owner for approval. These test results shall include ground rod resistance values and the weather and soil conditions present during the tests**.

B. Section 16123 - Building Wire and Cable
1. Test installation after new wiring is completed and when fixtures and equipment have been connected ready for use. Resistance between conductors and between each conductor and ground shall conform to NEC.
2. All wires #1/**0 AWG and larger conductors and service entrance conductors shall pass a 500 volt megger test prior to placing in service. <u>Testing to be witnessed by Owner's representative.</u> Acceptable minimum insulation resistance is 50 megohms**.

C. Section 16235 – Engine Generators

1. Operation and Maintenance Data: Submit instructions and service manuals for normal operation, routine maintenance, oil sampling and analysis for engine wear, and emergency maintenance procedures.
2. Before the work is accepted, an authorized representative of the Manufacturer shall personally inspect the installation and operation of the equipment to determine that it is properly installed and in proper operating order. The qualifications of the representative shall be appropriate to the technical requirements of the installation and shall be submitted to the owner for approval. The decision of the owner concerning the appropriateness of the representative shall be final. Testing and checking shall be accomplished during the course of the work where required by work being concealed, and at the completion of the work otherwise. In addition, the Contractor shall submit to the Design Engineer a signed statement from the representative certifying as follows: "I certify that the materials and/or equipment listed below have been personally inspected by the undersigned authorized Manufacturer's representative and is properly installed and operating in accordance with the Manufacturer's recommendations".
3. Furnish 8 hours of instruction each for two persons, to be conducted at project site with Manufacturer's representative.

D. Section 16411 – Panelboards

1. Project Record Documents: Record actual locations of panelboards and record actual circuiting arrangements.
2. Operation and Maintenance Data: Submit spare parts listing; source and current prices of replacement parts and supplies; and recommended maintenance procedures and intervals.

E. Section 16491 – Fuses

1. Project Record Documents: Record actual sizes, ratings, and locations of fuses.

F. Section 16710 – Telecommunications

1. Contractor shall maintain one set of drawings on site to continually and accurately record the as-constructed work. The mark-up drawings shall accurately indicate locations of all equipment, pull-boxes, conduits, cable types, cable routing, cable labeling, outlet locations, and outlet labeling. All record drawings shall be maintained and updated daily and made available for inspection at any time during the course of the work by the Owner or the Owner's Representative. At project completion Contractor shall deliver drawings and documentation of the project, in both hard copy and in AutoCAD V12 or later format, to minimally include:
2. As-built connectivity diagram indicating pathways and utilization of duct bank system for fiber optic cable connectivity.
3. As-built telecommunications floor plans of the facility with entire contracted cable and outlet placement clearly depicted.
4. As-built elevations of all termination fields describing cable and outlet location labeling scheme.
5. As-built logical riser diagram describing connectivity and cable sizes for both telecommunications and grounding cabling systems.
6. Cable test results submitted in both hard copy and magnetic format along with viewing software from the tester Manufacturer. Hard copy to be bound within loose-leaf binder neatly organized according to the test type and medium as identified in the Testing portion of this Specification.

G. Section 16722 – Gas Monitoring

1. Calibrate monitoring system per Manufacturer's recommendations. The Manufacturer's authorized technical representative shall be present during all tests and inspections. The Manufacturer's authorized representative shall provide supervision of final connections to the system panel, perform a complete functional test of the system and submit a written report to the Contractor attesting to the proper operation of the completed system. This report shall be a part of the final documents submitted to the owner.
2. The Manufacturer's authorized representative shall perform an eight (8) hour training session where the representative shall instruct and train a minimum of six (6) TxDOT personnel and, if applicable, local Fire Department personnel in the operation of the system. At the training session, the Manufacturer's authorized representative shall provide a complete written operating and maintenance manual that clearly describes the system, its operation, and any maintenance requirements. It shall also have a clearly understandable maintenance schedule and a complete parts list for all components of the system(s).

PART 2 - PRODUCTS (Not Used)

PART 3 - EXECUTION (Not Used)

END OF SECTION

SECTION 16060

GROUNDING AND BONDING

PART 1 - GENERAL

1.1 SUMMARY

A. Section Includes:
   1. Rod electrodes
   2. Wire
   3. Mechanical connectors
   4. Exothermic connections

1.2 RELATED SECTIONS

A. Section Includes: Section 16010 – Basic Electrical Requirements

1.3 REFERENCES

A. Institute of Electrical and Electronics Engineers:
   1. IEEE 142 - Recommended Practice for Grounding of Industrial and Commercial Power Systems
   2. IEEE 1100 - Recommended Practice for Powering and Grounding Electronic Equipment

B. National Fire Protection Association:
   1. NFPA 70 - National Electrical Code

1.4 SYSTEM DESCRIPTION

A. Grounding systems use the following elements as grounding electrodes:
   1. Metal underground water pipe
   2. Building steel
   3. Rod electrode

1.5 PERFORMANCE REQUIREMENTS

A. Grounding System Resistance: Per NEC, 25 ohms maximum for a single grounding electrode or 25 ohms maximum for multiple electrodes that are connected together.

1.6 SUBMITTALS

A. Product Data: Submit data on grounding electrodes and connections.

B. Test Reports: Provide grounding system test reports per Part 3.4.

1.7 CLOSEOUT SUBMITTALS

A. Project Record Documents: Record actual locations of components and grounding electrodes.

1.8 QUALITY ASSURANCE

A. Provide grounding materials conforming to requirements of NEC, IEEE 142, and UL labeled.

1.9 QUALIFICATIONS

A. Manufacturer: Company specializing in manufacturing Products specified in this section with minimum three years experience.

B. Installer: Company specializing in performing work of this section with minimum 3 years experience.

1.10 DELIVERY, STORAGE, AND HANDLING

A. Accept materials on site in original factory packaging, labeled with Manufacturer's identification.

B. Protect from weather and construction traffic, dirt, water, chemical, and mechanical damage, by storing in original packaging.

1.11 COORDINATION

A. Complete grounding and bonding of building reinforcing steel prior concrete placement.

PART 2 - PRODUCTS

2.1 ROD ELECTRODES

A. Manufacturers:
1. Copperweld, Inc.
2. Erico, Inc.
3. O-Z Gedney Co.
4. Thomas & Betts, Electrical

B. Product Description:
1. Material: Copper-clad steel
2. Diameter: 3/4 inch
3. Length: 10 feet

C. Connector: Connectors for exothermic welded connections only.

2.2 WIRE

A. Material: Stranded copper

B. Grounding Electrode Conductor: Copper conductor, insulated

C. Bonding Conductor: Copper conductor, insulated

2.3 MECHANICAL CONNECTORS

A. Manufacturers:
1. Erico, Inc.
2. ILSCO Corporation
3. O-Z Gedney Co.
4. Thomas & Betts, Electrical

B. Description: Bronze connectors, suitable for grounding and bonding applications, in configurations required for particular installation.

2.4 EXOTHERMIC CONNECTIONS

A. Manufacturers:
1. Cadweld, Erico, Inc.
2. Copperweld, Inc.
3. ILSCO Corporation
4. O-Z Gedney Co.
5. Thomas & Betts, Electrical

B. Product Description: Exothermic materials, accessories, and tools for preparing and making permanent field connections between grounding system components.

PART 3 - EXECUTION

3.1 EXAMINATION

A. Verify final backfill and compaction has been completed before driving rod electrodes.

3.2 PREPARATION

A. Remove surface contaminants at connection points.

3.3 INSTALLATION

A. Install in accordance with IEEE 142.

B. Install rod electrodes at locations as indicated on Drawings. Install additional rod electrodes to achieve specified resistance to ground.

C. Install grounding and bonding conductors concealed from view.

D. Bond together metal siding not attached to grounded structure; bond to ground.

E. Install isolated grounding conductor for circuits supplying personal computers in accordance with IEEE 1100.

F. Equipment Grounding Conductor: Install separate, insulated conductor within each feeder and branch circuit raceway. Terminate each end on suitable lug, bus, or bushing.

G. Permanently ground entire light and power system in accordance with NEC, including service equipment, distribution panels, lighting panel boards, switch and starter enclosures, motor frames, grounding type receptacles, and other exposed non-current carrying metal parts of electrical equipment.

H. Install branch circuits feeding isolated ground receptacles with separate insulated grounding conductor, connected only at isolated ground receptacle ground terminals, and at isolated ground bus of serving panel.

I. Permanently attach equipment and grounding conductors prior to energizing equipment.

3.4 FIELD QUALITY CONTROL

A. Perform ground resistance testing in accordance with IEEE 142.

B. Perform continuity testing in accordance with IEEE 142.

C. When improper grounding is found on receptacles, check receptacles in entire project and correct. Perform retest.

D. All new ground rods shall be tested after installation using a ground rod resistance tester. The maximum resistance for each ground rod shall be no more than 25 ohms, as required by the NEC. After the ground rod resistance test, if the ground rod has a resistance higher than 25 ohms, the Contractor will need to modify the ground system to lower this resistance. To lower the resistance, the Contractor shall drive and interconnect additional ground rods in a triad formation, install longer ground rods or use manufactured, encapsulated electrolyte ground rods to obtain a resistance of 25 ohms or less. Manufactured, electrolyte ground rods shall be equal to Lyncole XIT Grounding Systems. For a multiple ground rod installations, rods shall be spaced 10' apart and #1/0 AWG or larger bare, copper conductors shall be installed underground between rods, minimum 18” below grade. After corrective measures are complete, the new ground rod installation shall be re-tested with a ground rod tester to show that each installation has a total resistance of 25 ohms or less. **Ground rod resistance test results shall be documented, signed by the licensed electrician performing the tests, and submitted to the Owner for approval. These test results shall include ground rod resistance values and the weather and soil conditions present during the tests**.

END OF SECTION

SECTION 16070

ELECTRICAL HANGERS AND SUPPORTS

PART 1 - GENERAL

1.1 SUMMARY

A. Section Includes:
1. Conduit supports
2. Formed steel channel
3. Spring steel clips
4. Sleeves
5. Mechanical sleeve seals
6. Equipment bases and supports

1.2 RELATED SECTIONS

A. Division 3 - Cast-In-Place Concrete: Product requirements for concrete for placement by this section.

1.3 REFERENCES

A. National Fire Protection Association:
1. NFPA 70 - National Electrical Code

1.4 SUBMITTALS

A. Shop Drawings: Indicate system layout with location and detail of trapeze hangers.

B. Product Data: Submit Manufacturers catalog data including load capacity.

C. Manufacturer's Installation Instructions: Provide complete Manufacturer’s installation instructions.

D. Manufacturer's Certificate: Certify products meet or exceed specified requirements.

1.5 QUALIFICATIONS

A. Manufacturer: Company specializing in manufacturing Products specified in this section with minimum three years experience.

B. Installer: Company specializing in performing work of this section with minimum 3 years experience.

1.6 DELIVERY, STORAGE, AND HANDLING

A. Accept materials on site in original factory packaging, labeled with Manufacturer's identification.

B. Protect from weather and construction traffic, dirt, water, chemical, and mechanical damage, by storing in original packaging.

PART 2 - PRODUCTS

2.1 CONDUIT SUPPORTS

A. Manufacturers:
1. Allied Tube & Conduit Corp.
2. Electroline Manufacturing Company
3. O-Z Gedney Co.

B. Hanger Rods: Threaded high tensile strength galvanized carbon steel with free running threads.

C. Beam Clamps: Malleable Iron, with tapered hole in base and back to accept either bolt or hanger rod. Set screw: hardened steel.

D. Conduit clamps for trapeze hangers: Galvanized steel, notched to fit trapeze with single bolt to tighten.

E. Conduit clamps - general purpose: One hole malleable iron for surface mounted conduits.

F. Cable Ties: High strength nylon temperature rated to 185 degrees F. Self locking.

2.2 FORMED STEEL CHANNEL

A. Manufacturers:
1. Allied Tube & Conduit Corp.
2. B-Line Systems
3. Midland Ross Corporation, Electrical Products Division
4. Unistrut Corp.

B. Product Description: Galvanized 12 gage thick steel. With holes 1-1/2 inches on center.

2.3 SLEEVES

A. Sleeves for conduits through Non-fire Rated Floors: 18 gage thick galvanized steel.

B. Sleeves for conduits through Non-fire Rated Beams, Walls, Footings, and Potentially Wet Floors: Steel pipe or 18 gage thick galvanized steel.

2.4 MECHANICAL SLEEVE SEALS

A. Manufacturers:
   1. Thunderline Link-Seal, Inc.
   2. NMP Corporation

B. Product Description: Modular mechanical type, consisting of interlocking synthetic rubber links shaped to continuously fill annular space between object and sleeve, connected with bolts and pressure plates causing rubber sealing elements to expand when tightened, providing watertight seal and electrical insulation.

PART 3 - EXECUTION

3.1 EXAMINATION

A. Verify openings are ready to receive sleeves.

3.2 INSTALLATION - HANGERS AND SUPPORTS

A. Anchors and Fasteners:
   1. Concrete Structural Elements: Provide expansion anchors or powder actuated anchors.
   2. Steel Structural Elements: Provide beam clamps.
   3. Concrete Surfaces: Provide self-drilling anchors and expansion anchors.
   4. Solid Masonry Walls: Provide expansion anchors.
   5. Sheet Metal: Provide sheet metal screws.
   6. Wood Elements: Provide wood screws.

B. Install conduit and raceway support and spacing in accordance with NEC.

C. Do not fasten supports to pipes, ducts, mechanical equipment, or conduit.

D. Install multiple conduit runs on common hangers.

E. Supports:
   1. Fabricate supports from structural steel or formed steel channel. Install hexagon head bolts to present neat appearance with adequate strength and rigidity. Install spring lock washers under nuts.
   2. Install surface mounted cabinets and panelboards with minimum of four anchors.
   3. In wet and damp locations install steel channel supports to stand cabinets and panelboards 1 inch off wall.

3.3 INSTALLATION - EQUIPMENT BASES AND SUPPORTS

A. Provide housekeeping pads of concrete, minimum 3-1/2 inches thick and extending 6 inches beyond supported equipment.

B. Using templates furnished with equipment, install anchor bolts, and accessories for mounting and anchoring equipment.

3.4 INSTALLATION - SLEEVES

A. Exterior watertight entries: Seal with adjustable interlocking rubber links.

B. Conduit penetrations not required to be watertight: Sleeve and fill with silicon foam.

C. Set sleeves in position in forms. Provide reinforcing around sleeves.

D. Size sleeves large enough to allow for movement due to expansion and contraction. Provide for continuous insulation wrapping.

E. Extend sleeves through floors 1 inch above finished floor level. Caulk sleeves.

F. Where conduit or raceway penetrates floor, ceiling, or wall, close off space between conduit or raceway and adjacent work with stuffing insulation and caulk airtight. Provide close fitting metal collar or escutcheon covers at both sides of penetration.

G. Install chrome plated steel escutcheons at finished surfaces.

3.5 PROTECTION OF FINISHED WORK

A. Protect adjacent surfaces from damage by material installation.

END OF SECTION

SECTION 16075

ELECTRICAL IDENTIFICATION

PART 1 - GENERAL

1.1 SUMMARY

A. Section Includes:
   1. Nameplates
   2. Adhesive signs
   3. Wire markers
   4. Conduit markers
   5. Underground Warning Tape

1.2 RELATED SECTIONS

A. Section 16010 – Basic Electrical Requirements

1.3 SUBMITTALS

A. Product Data:
   1. Submit Manufacturer’s catalog literature for each product used on the project.

B. Manufacturer's Installation Instructions: Indicate installation instructions, special procedures, and installation.

1.4 QUALIFICATIONS

A. Manufacturer: Company specializing in manufacturing Products specified in this section with minimum three years experience.

B. Installer: Company specializing in performing Work of this section with minimum three years experience.

1.5 DELIVERY, STORAGE, AND HANDLING

A. Accept identification products on site in original containers. Inspect for damage.

B. Protect from weather and construction traffic, dirt, water, chemical, and mechanical damage, by storing in original wrapping.

1.6 NAMEPLATES

A. Product Description: Laminated three-layer plastic with engraved white letters on a black background color.

B. Letter Size:
   1. 1/8 inch high letters for identifying individual equipment and loads.
   2. ¼ inch high letters for identifying grouped equipment and loads.

C. Minimum nameplate thickness: 1/8 inch.

1.7 ADHESIVE WARNING SIGNS

A. Product Description: Sized as noted on the drawings. Pressure-Sensitive Vinyl with adhesive backing, 4- mil thick, white background with black lettering, OSHA header color as noted by the sign type, rated for outdoor use, fade resistant in sunlight, flexible down to -40° F.

1.8 WIRE MARKERS

A. Description: Split sleeve, or tubing type wire markers or other standard wire marking system as approved by the Engineer.

B. Legend:
1. Power and Lighting Circuits: Branch circuit or feeder number as indicated on Drawings.
2. Control Circuits: Control wire number as indicated Drawings.

1.9 CONDUIT AND RACEWAY MARKERS

A. Description: Labels fastened with adhesive.

B. Color:
1. 208 Volt System: Black lettering on white background
2. Telephone System: Blue lettering on white background

C. Legend:
1. 208 Volt System: 208 VOLTS
2. Telephone System: TELEPHONE

1.10 UNDERGROUND WARNING TAPE

A. Description: Minimum 4 or 6 inch wide plastic tape, detectable type, colored red with suitable warning legend describing buried electrical lines.

1.11 PREPARATION

A. Degrease and clean surfaces to receive adhesive for identification materials.

1.12 INSTALLATION

A. Install identifying devices after completion of painting.

B. Nameplate Installation:
1. Install nameplate parallel to equipment lines.
2. Install nameplate for each electrical distribution and control equipment enclosure with corrosive-resistant mechanical fasteners.
3. Install nameplates for each control panel and major control components located outside panel with corrosive-resistant mechanical fasteners.
4. Secure nameplate to equipment front using screws.

5. Secure nameplate to inside surface of door on recessed panel board in finished locations.
6. Each nameplate shall include the equipment name or designation, the voltage, the phase and the state the source panel of the feeder to the equipment in a statement that reads “FEEDS FROM PANEL __”.
7. Install nameplates for the following:
    a. Main Service Disconnect Device
    b. Switchboards
    c. Panel boards
    d. Transformers
    e. Service Disconnect Devices for equipment
    f. Individual Circuit Breaker enclosures
    g. Current Transformer enclosures
    h. Other enclosures as noted on the drawings or as directed by the Owner

C. Junction Box Labeling:
1. All junction and pull boxes 4” square or smaller shall be labeled with the panel number and the circuit numbers contained in the box. This labeling shall be performed by legibly writing the information on the box cover with a black, indelible marker.

D. Wire Marker Installation:
1. Install wire marker for each conductor (hot wires and neutral wires) at panel boards, load centers, wireways, pull boxes, junction boxes, and at each load circuit connection point.
2. Mark data cabling at each end. Install additional marking at accessible locations along the cable run.
3. Install labels at data outlets identifying patch panel and port designation as indicated on Drawings.

E. Underground Warning Tape Installation:
1. Install underground warning tape along length of each underground conduit, raceway, or cable 6 to 8 inches below finished grade, directly above buried conduit, raceway, or cable. Install warning tape with writing facing up.

END OF SECTION

SECTION 16123

BUILDING WIRE AND CABLE

PART 1 - GENERAL

1.1 SUMMARY

A. Section includes building wire and cable and wiring connectors and connections.

1.2 RELATED SECTIONS

A. Section 16010 – Basic Electrical Requirements

1.3 SYSTEM DESCRIPTION

A. Product Requirements: Provide products as follows:
   1. Solid conductor for feeders and branch circuits 10 AWG and smaller
   2. Stranded conductors for control circuits
   3. Conductor not smaller than 12 AWG for power and lighting circuits
   4. Conductor not smaller than 12 AWG for line voltage control circuits
   5. 10 AWG conductors for 20 ampere, 120 volt branch circuits longer than 150 feet

B. Wiring Methods: Provide the following wiring methods:
   1. Concealed Dry Interior Locations: Use only Type THHN/THWN insulation, in raceway
   2. Exposed Dry Interior Locations: Use only Type THHN/THWN insulation, in raceway
   3. Above Accessible Ceilings: Use only Type THHN/THWN insulation, in raceway
   4. Wet or Damp Interior Locations: Use only Type THHN/THWN insulation, in raceway
   5. Exterior Locations: Use only Type THHN/THWN insulation, in raceway
   6. Underground Locations: Use only Type THHN/THWN insulation, in raceway

1.4 SUBMITTALS

A. Product Data: Submit for building wire and cable.

1.5 QUALIFICATIONS

A. Manufacturer: Company specializing in manufacturing products specified in this section with minimum three years experience.

1.6 FIELD MEASUREMENTS

A. Verify field measurements are as indicated on Drawings.

1.7 COORDINATION

A. Where wire and cable destination is indicated and routing is not shown, determine routing and lengths required.

1.8 BUILDING WIRE

A. Manufacturers:
   1. Diamond Wire & Cable Co.
   2. Essex Group Inc.
   3. General Cable Co.
   4. Engineer approved equal

B. Product Description: Single conductor insulated wire.

C. Conductor: Copper.

D. Insulation: NFPA 70; THHN/THWN insulation.

PART 2 - EXECUTION

2.1 EXAMINATION

A. Verify interior of building has been protected from weather.

B. Verify mechanical work likely to damage wire and cable has been completed.

C. Verify raceway installation is complete and supported.

2.2 PREPARATION

A. Completely and thoroughly swab raceway before installing wire.

2.3 INSTALLATION

A. Route wire and cable to meet Project conditions.

B. All electrical wiring and cable, including HVAC control and thermostat cables, shall be installed in conduit or other approved raceway.

C. Neatly train and lace wiring inside boxes, equipment, and panel boards.

D. Identify and color code wire and cable under provisions of Section 16075. Identify each conductor with its circuit number or other designation indicated.

E. Special Techniques--Building Wire in Raceway:
   1. Pull conductors into raceway at same time.
   2. Install building wire 4 AWG and larger with pulling equipment.
   3. Use pulling compound to install wiring in raceways.

F. Special Techniques - Wiring Connections:
   1. Clean conductor surfaces before installing lugs and connectors.
   2. Make splices, taps, and terminations to carry full ampacity of conductors with no perceptible temperature rise.
   3. Tape uninsulated conductors and connectors with electrical tape to 150 percent of insulation rating of conductor.
   4. Install split bolt connectors for copper conductor splices and taps, 6 AWG and larger.
   5. Install solderless pressure connectors with insulating covers for copper conductor splices and taps, 8 AWG and smaller.
   6. Install insulated spring wire connectors with plastic caps for copper conductor splices and taps, 10 AWG and smaller.
   7. Install solid conductor for feeders and branch circuits 10 AWG and smaller.

2.4 WIRE COLOR

A. General:
   1. For wire sizes 10 AWG and smaller, install wire colors in accordance with the following:
      a. Black, red, and blue for circuits at 120/208 volts single or three phase, wye systems.
      b. Three-way and four-way switch travelers shall be purple or lavender. Switch leg conductors shall be color coded different from the traveler conductors and the phase conductors of the system. The color used for switch leg conductors shall be the same throughout the project. The color used for traveler conductors shall be the same throughout the project.
   2. For wire sizes 8 AWG and larger, identify wire with colored tape at terminals, splices and boxes. Colors are as follows:
      a. Black, red, and blue for circuits at 120/208 volts single or three phase.

B. Neutral Conductors: White or gray per NEC. When two or more neutrals are located in one conduit, individually identify each with proper circuit number, or use gray wire for one or more of the neutrals.

C. Branch Circuit Conductors: Install three or four wire home runs with each phase uniquely color coded per Part A above.

D. Feeder Circuit Conductors: Uniquely color code each phase per Part A above.

E. Ground Conductors:
   1. For 6 AWG and smaller: Green.
   2. For 4 AWG and larger: Identify with green tape at both ends and visible points including junction boxes.

END OF SECTION

SECTION 16130

RACEWAY AND BOXES

PART 1 - GENERAL

1.1 SUMMARY

A. Project Identification Section includes conduit and tubing, surface raceways, wireways, outlet boxes, pull and junction boxes, and handholes.

1.2 RELATED SECTIONS

A. Section 16010 – Basic Electrical Requirements

B. Section 16060 - Grounding and Bonding

C. Section 16070 - Electrical Hangers and Supports

D. Section 16075 - Electrical Identification

1.3 REFERENCES

A. American National Standards Institute:
1. ANSI C80.1 - Rigid Steel Conduit, Zinc Coated
2. ANSI C80.3 - Specification for Electrical Metallic Tubing, Zinc Coated

B. National Electrical Manufacturers Association:
1. NEMA 250 - Enclosures for Electrical Equipment (1000 Volts Maximum)
2. NEMA FB 1 - Fittings, Cast Metal Boxes, and Conduit Bodies for Conduit and Cable Assemblies
3. NEMA OS 1 - Sheet Steel Outlet Boxes, Device Boxes, Covers, and Box Supports
4. NEMA RN 1 - Polyvinyl Chloride (PVC) Externally Coated Galvanized Rigid Steel Conduit and Intermediate Metal Conduit
5. NEMA TC 2 - Electrical Polyvinyl Chloride (PVC) Tubing and Conduit
6. NEMA TC 3 - PVC Fittings for Use with Rigid PVC Conduit and Tubing

1.4 SYSTEM DESCRIPTION

A. Raceway and boxes located as indicated on Drawings, and at other locations required for splices, taps, wire pulling, equipment connections, and compliance with regulatory requirements. Raceway and boxes are shown in approximate locations unless dimensioned. Provide raceway to complete wiring system.

B. Underground More than 5 feet outside Foundation Wall: Schedule 40 PVC, nonmetallic conduit unless noted otherwise on the drawings. Provide cast metal boxes or nonmetallic handholes or other pull boxes as scheduled on the drawings.

C. Underground within 5 feet from Foundation Wall or edge of paving: Provide corrosion protected, rigid steel conduit or plastic coated rigid steel conduit unless noted otherwise on the drawings. Provide pull boxes as noted on the drawings.

D. In or Under Slab on Grade: Provide corrosion protected rigid steel conduit or plastic coated rigid steel conduit. Provide cast metallic boxes.

E. Outdoor Locations, Above Grade: Provide rigid steel conduit unless specifically noted otherwise on the drawings. Provide cast metal outlet, pull, and junction boxes.

F. In Slab Above Grade: Provide corrosion protected rigid steel conduit or Schedule 40 PVC nonmetallic conduit. Provide cast boxes.

G. Wet and Damp Locations: Provide rigid steel conduit unless specifically noted otherwise on the drawings. Provide cast metal outlet, junction, and pull boxes. Provide flush mounting outlet box in finished areas.

H. Concealed Dry Locations: Provide electrical metallic tubing. Provide sheet-metal boxes. Provide flush mounting outlet box in finished areas. Provide hinged enclosure for pull boxes larger than 4” square.

I. Exposed Dry Locations: Provide electrical metallic tubing. In shop area provide rigid metal conduit in all areas below 8 feet above finished floor. Provide sheet-metal boxes. Provide flush mounting outlet box in finished areas. Provide hinged enclosure for pull boxes larger that 4” square.

1.5 DESIGN REQUIREMENTS

A. Minimum Raceway Size: ¾ inch unless otherwise specified.

B. Minimum Underground Raceway Size: 1” unless otherwise specified.

1.6 SUBMITTALS

A. Product Data: Submit for the following:
1. Metal conduit, all types
2. Flexible metal conduit
3. Liquid tight flexible metal conduit
4. Nonmetallic conduit
5. Raceway fittings, all types
6. Conduit bodies
7. Wireway
8. Pull and junction boxes

B. Manufacturer's Installation Instructions: Submit application conditions and limitations of use stipulated by Product testing agency specified under Regulatory Requirements. Include instructions for storage, handling, protection, examination, preparation, and installation of Product.

1.7 DELIVERY, STORAGE, AND HANDLING

A. Protect conduit from corrosion and entrance of debris by storing above grade. Provide appropriate covering.

B. Protect PVC conduit from sunlight.

1.8 COORDINATION

A. Coordinate installation of outlet boxes for equipment connected under Section 16150.

B. Coordinate mounting heights, orientation and locations of outlets mounted above counters, benches, and backsplashes.

PART 2 - PRODUCTS

2.1 METAL CONDUIT

A. Rigid Steel Conduit: ANSI C80.1

B. Fittings and Conduit Bodies: NEMA FB 1 all steel threaded fittings. Do not use thread-less connectors for rigid steel conduit.

2.2 PVC COATED METAL CONDUIT

A. Product Description: NEMA RN 1; rigid steel conduit with external PVC coating, 20 mil thick.

B. Fittings and Conduit Bodies: NEMA FB 1; steel fittings with external PVC coating to match conduit.

2.3 FLEXIBLE METAL CONDUIT

A. Product Description: Interlocked steel construction.

B. Fittings: NEMA FB 1.

2.4 LIQUID-TIGHT FLEXIBLE METAL CONDUIT

A. Product Description: Interlocked steel construction with PVC jacket, type LFMC.

B. Fittings: NEMA FB 1

2.5 ELECTRICAL METALLIC TUBING (EMT)

A. Product Description: ANSI C80.3; galvanized tubing.

B. Fittings and Conduit Bodies: NEMA FB 1; steel compression type only. **Do not use set screw fittings.**

2.6 NON-METALLIC CONDUIT

A. Product Description: NEMA TC 2; Schedule 40 PVC or Schedule 80 PVC as noted on the drawings.

B. Fittings and Conduit Bodies: NEMA TC 3.

2.7 SURFACE METAL RACEWAY

A. Product Description: Sheet metal channel with fitted cover, suitable for use as surface metal raceway.

B. Finish: Gray enamel.

C. Fittings, Boxes, and Extension Rings: Furnish Manufacturer's standard accessories; match finish on raceway.

2.8 OUTLET BOXES

A. Sheet Metal Outlet Boxes: NEMA OS 1, galvanized steel.
   1. Luminaires and Equipment Supporting Boxes: Rated for weight of equipment supported; furnish 1/2 inch male fixture studs where required.
   2. Concrete Ceiling Boxes: Concrete type.

B. Cast Boxes: NEMA FB 1, Type FD, cast ferroalloy. Furnish gasketed cover by box Manufacturer. Furnish threaded hubs.

C. Wall Plates for Finished Areas: As specified in Section 16140.

D. Wall Plates for Unfinished Areas: As specified in Section 16140.

E. Wall Plates for Exterior Areas: Furnish covers with gaskets. Furnish with “in-use” covers.

PART 3 - EXECUTION

3.1 EXAMINATION

A. Verify outlet locations and routing and termination locations of raceway prior to rough-in.

3.2 INSTALLATION

A. Ground and bond raceway and boxes in accordance with Section 16060.

B. Fasten raceway and box supports to structure and finishes.

C. Identify raceway and boxes in accordance with Section 16075.

D. Arrange raceway and boxes to maintain headroom and present neat appearance.

3.3 INSTALLATION - RACEWAY

A. Raceway routing is shown in approximate locations unless dimensioned. Route to complete wiring system.

B. Arrange raceway supports to prevent misalignment during wiring installation.

C. Support raceway using coated steel or malleable iron straps, lay-in adjustable hangers, clevis hangers, and split hangers in accordance with Section 16070.

D. Group related raceway; support using conduit rack. Construct rack using steel channel.

E. Do not support raceway with wire or perforated pipe straps. Remove wire used for temporary supports

F. Do not attach raceway to ceiling support wires or other piping systems.

G. Route exposed raceway parallel and perpendicular to walls.

H. Route raceway installed above accessible ceilings parallel and perpendicular to walls.

I. Maximum of 6’ length for above ceiling, flexible raceway connections to light fixtures.

J. Maximum of 2’ length for final, flexible raceway connection to equipment.

K. Route conduit in and under slab from point-to-point.

L. Maintain clearance between raceway and piping for maintenance purposes.

M. Maintain 12 inch clearance between raceway and surfaces with temperatures exceeding 104 degrees F.

N. Cut conduit square using saw or pipe cutter; de-burr cut ends.

O. Bring conduit to shoulder of fittings; fasten securely.

P. Join nonmetallic conduit using cement as recommended by Manufacturer. Wipe nonmetallic conduit dry and clean before joining. Apply full even coat of cement to entire area inserted in fitting. Allow joint to cure for minimum 20 minutes.

Q. Install conduit hubs or sealing locknuts to fasten conduit to sheet metal boxes in damp and wet locations and to cast boxes.

R. Install no more than equivalent of four 90 degree bends between boxes. Install conduit bodies to make sharp changes in direction, as around beams.

S. Avoid moisture traps; install junction box with drain fitting at low points in conduit system.

T. Install fittings to accommodate expansion and deflection where raceway crosses control and expansion joints.

U. Install suitable pull string or cord in each empty raceway except sleeves and nipples.

V. Install suitable caps to protect installed conduit against entrance of dirt and moisture.

W. Surface Raceway: Install flat-head screws, clips, and straps to fasten raceway channel to surfaces; mount plumb and level. Install insulating bushings and inserts at connections to outlets and corner fittings.

X. Close ends and unused openings in wireway.

3.4 INSTALLATION - BOXES

A. Install wall mounted boxes at elevations to accommodate mounting heights as indicated on Drawings or as specified in section for outlet device.

B. Install flush mounted outlet and fixture boxes for all interior or exterior devices or fixtures installed in finished walls and ceilings. Surface boxes will only be allowed in unfinished, open structure areas.

C. Adjust box location prior to rough-in to accommodate intended purpose.

D. Orient boxes to accommodate wiring devices oriented as specified in Section 16140.

E. Install pull boxes and junction boxes above accessible ceilings and in unfinished areas only.

F. In Accessible Ceiling Areas: Install outlet and junction boxes no more than 6 inches from ceiling access panel or from removable recessed luminaire.

G. Locate flush mounting box in masonry wall to require cutting of masonry unit corner only. Coordinate masonry cutting to achieve neat opening.

H. Do not install flush mounting box back-to-back in walls; install with minimum 6 inches separation. Install with minimum 24 inches separation in acoustic rated walls.

I. Secure flush mounting box to interior wall and partition studs. Accurately position to allow for surface finish thickness.

J. Install stamped steel bridges to fasten flush mounting outlet box between studs.

K. Install flush mounting box without damaging wall insulation or reducing its effectiveness.

L. Install adjustable steel channel fasteners for hung ceiling outlet box.

M. Do not fasten boxes to ceiling support wires or other piping systems.

N. Support boxes independently of conduit.

O. Install gang box where more than one device is mounted together. Do not use sectional box.

P. Install gang box with plaster ring for single device outlets.

Q. Install large enclosures with hinged covers so that cover can be opened a minimum of 90 degrees without obstructions and so that all cover clamps and screws are accessible.

3.5 INTERFACE WITH OTHER PRODUCTS

A. Route conduit through roof openings for piping and ductwork or through suitable roof jack with pitch pocket.

B. Locate outlet boxes to allow luminaires positioned as indicated on reflected ceiling plan.

C. Align adjacent wall mounted outlet boxes for switches, thermostats, and similar devices.

3.6 ADJUSTING

A. Adjust flush-mounting outlets to make front flush with finished wall material.

B. Install knockout closures in unused openings in boxes.

3.7 CLEANING

A. Clean interior of boxes to remove dust, debris, and other material.

B. Clean exposed surfaces and restore finish.

END OF SECTION

SECTION 16140

ELECTRICAL WIRING DEVICES

PART 1 - GENERAL

1.1 SUMMARY

A. Section includes wall switches; receptacles; multi outlet assembly; and device plates and decorative box covers.

B. Related Sections:
1. Section 16010 – Basic Electrical Requirements
2. Section 16130 - Raceway and Boxes: Outlet boxes for wiring devices

1.2 REFERENCES

A. National Electrical Manufacturers Association:
1. NEMA WD 1 - General Requirements for Wiring Devices
2. NEMA WD 6 - Wiring Devices-Dimensional Requirements

1.3 SUBMITTALS

A. Product Data: Submit Manufacturer's catalog information showing dimensions, colors, and configurations.

1.4 QUALIFICATIONS

A. Manufacturer: Company specializing in manufacturing products specified in this section with minimum three years experience.

PART 2 - PRODUCTS

2.1 WALL SWITCHES

A. Manufacturers:
1. Hubbell
2. Pass and Seymour
3. Leviton

B. Product Description: NEMA WD 1, Heavy-Duty AC only general-use snap switch.

C. Body and Handle: Ivory plastic with toggle handle unless alternate color is specified on the drawings.

D. Ratings: Match branch circuit and load characteristics.

2.2 RECEPTACLES

A. Manufacturers:

1. Hubbell
2. Pass and Seymour
3. Leviton

B. Product Description: NEMA WD 1, Heavy-duty general use receptacle.

C. Device Body: Ivory plastic unless alternate color is specified on the drawings. Provide ivory colored duplex outlets with orange dot at dedicated, isolated ground electrical outlets.

D. Convenience Receptacle: 20 amp, Type 5-20R.

E. GFCI Receptacle: Convenience receptacle with integral ground fault circuit interrupter to meet regulatory requirements.

F. Power receptacles shall be commercial grade as a minimum and shall be sized as specified on the drawings.

2.3 WALL PLATES

A. Manufacturers:
1. Hubbell
2. Pass and Seymour
3. Leviton

B. Decorative Cover Plate: Ivory nylon for all flush mounted switches, receptacles, and other devices specified on the drawings. Receptacles or switches installed on open framed walls shall be installed in 4” boxes with industrial raised face covers.

C. Jumbo Decorative Cover Plate: Ivory nylon plates for all flush mounted switches or devices specified on the drawings.

D. Weatherproof Cover Plate: Gasketed cast metal plate with hinged and gasketed device cover unless a gasketed, in-use type cover is specified on the drawings

PART 3 - EXECUTION

3.1 EXAMINATION

A. Verify outlet boxes are installed at proper height.

B. Verify wall openings are neatly cut and completely covered by wall plates.

C. Verify branch circuit wiring installation is completed, tested, and ready for connection to wiring devices.

3.2 PREPARATION

A. Clean debris from outlet boxes.

3.3 INSTALLATION

A. Install devices plumb and level.

B. Install switches with OFF position down.

C. Install receptacles with grounding pole on bottom.

D. Connect wiring device grounding terminal to branch circuit equipment grounding conductor.

E. Install decorative plates on switch, receptacle, and blank outlets in finished areas.

F. Install raised cover galvanized steel plates on outlet boxes and junction boxes in unfinished areas, above accessible ceilings, and on surface mounted outlets.

3.4 INTERFACE WITH OTHER PRODUCTS

A. Coordinate locations of outlet boxes provided under Section 16130 to obtain mounting heights as specified and as indicated on drawings.

B. Install wall switch 48 inches above finished floor.

C. Install convenience receptacle and voice/data outlets 18 inches above finished floor or as noted on the drawings.

D. Install convenience receptacle and voice/data outlets 6 inches above counters or as noted on the drawings.

E. Install voice/data outlets for wall mounted telephone 48 inches above finished floor or as noted on the drawings.

3.5 FIELD QUALITY CONTROL

A. Inspect each wiring device for defects.

B. Operate each wall switch with circuit energized and verify proper operation.

C. Verify each receptacle device is energized.

D. Test each receptacle device for proper polarity.

E. Test each GFCI receptacle device for proper operation.

3.6 ADJUSTING

A. Adjust devices and wall plates to be flush and level.

3.7 CLEANING

A. Clean exposed surfaces to remove splatters and restore finish.

END OF SECTION

SECTION 16150

WIRING CONNECTIONS

PART 1 - GENERAL

1.1 SUMMARY

A. Section includes electrical connections to equipment.

B. Related Sections:
1. Section 16010 – Basic Electrical Requirements
2. Section 16123 - Building Wire and Cable
3. Section 16130 - Raceway and Boxes

1.2 REFERENCES

A. National Electrical Manufacturers Association:
1. NEMA WD 1 - General Requirements for Wiring Devices
2. NEMA WD 6 - Wiring Devices-Dimensional Requirements

1.3 SUBMITTALS

A. Product Data: Submit wiring device Manufacturer’s catalog information showing dimensions, configurations, and construction.

B. Provide complete Manufacturer's installation instructions.

1.4 COORDINATION

A. Obtain and review shop drawings, product data, Manufacturer’s wiring diagrams, and Manufacturer's instructions for equipment furnished under other sections.

B. Determine connection locations and requirements.

C. Sequence rough-in of electrical connections to coordinate with installation of equipment.

D. Sequence electrical connections to coordinate with start-up of equipment.

PART 2 - PRODUCTS

2.1 CORD AND PLUGS

A. Attachment Plug Construction: Conform to NEMA WD 1.

B. Configuration: NEMA WD 6; match receptacle configuration at outlet furnished for equipment.

C. Cord Construction: Type SO multi conductor flexible cord with identified equipment grounding conductor, suitable for use in damp locations.

D. Size: Suitable for connected load of equipment, length of cord, and rating of branch circuit over current protection.

PART 3 - EXECUTION

3.1 EXAMINATION

A. Verify equipment is ready for electrical connection, for wiring, and to be energized.

3.2 INSTALLATION

A. Make all line voltage electrical connections.

B. Make conduit connections to equipment using flexible metal conduit. Use liquid-tight flexible metal conduit with watertight connectors in damp or wet locations. Flexible conduit length to equipment is limited to 2 feet. Support flexible conduit.

C. Connect heat producing equipment using wire and cable with insulation suitable for temperatures encountered.

D. Install receptacle outlet to accommodate connection with attachment plug.

E. Install cord and cap for field-supplied attachment plug.

F. Install suitable strain-relief clamps and fittings for cord connections at outlet boxes and equipment connection boxes.

G. Install disconnect switches, controllers, control stations, and control devices to complete equipment wiring requirements.

H. Install terminal block jumpers to complete equipment wiring requirements.

I. Install interconnecting conduit and wiring between devices and equipment to complete equipment wiring requirements.

3.3 ADJUSTING

A. Cooperate with utilization equipment Installers and field service personnel during checkout and starting of equipment to allow testing and balancing and other startup operations. Provide personnel to operate electrical system and checkout wiring connection components and configurations

END OF SECTION

SECTION 16210

ELECTRICAL UTILITY SERVICES

PART 1 - GENERAL

1.1 SUMMARY

A. Section includes arrangement with Utility Company for permanent electric service; payment of Utility Company charges for service; service provisions; and utility metering equipment.

1.2 RELATED SECTIONS

A. 16010 – Basic Electrical Requirements

1.3 SYSTEM DESCRIPTION

A. Utility Company: Entergy Texas's service

B. System Characteristics: 208Y/120 volt, 3 phase, 4 wire, 60 hertz

C. Service Entrance: Per drawings

1.4 QUALITY ASSURANCE

A. Perform work in accordance with Utility Company written requirements.

B. Maintain one copy of each document on site.

1.5 FIELD MEASUREMENTS

A. Verify field measurements are as indicated on Drawings.

1.6 COORDINATION

A. Contact Utility Company regarding charges related to service installation. Include utility charges in this contract.

PART 2 - PRODUCTS

2.1 TRANSFORMER PAD / WHEATHER HEAD

A. Furnish in accordance with Utility Company requirements.

2.2 UTILITY METERS

A. Furnished by Utility Company.

2.3 UTILITY METER BASE

A. Provide, mount, and connect in accordance with Utility Company's requirements and the project drawings.

2.4 CURRENT TRANSFORMER ENCLOSURE AND EQUIPMENT

A. Provide, mount, and connect in accordance with Utility Company's requirements and the project drawings.

PART 3 - EXECUTION

3.1 EXAMINATION

A. Verify service equipment is ready to be connected and energized.

END OF SECTION

SECTION 16235

ENGINE GENERATORS

PART 1 - GENERAL

1.1 SUMMARY

A. Section includes engine generator set, exhaust silencer and fittings, transfer switch, fuel fittings, remote control panel, battery, and charger.

B. RELATED SECTIONS
1. 16010 – Basic Electrical Requirements
2. 16060 – Grounding and Bonding
3. 16075 – Electrical Identification

1.2 REFERENCES

A. National Electrical Manufacturers Association:
1. NEMA 250 - Enclosures for Electrical Equipment (1000 Volts Maximum)
2. NEMA AB 1 - Molded Case Circuit Breakers and Molded Case Switches
3. NEMA ICS 10 - Industrial Control and Systems: AC Transfer Switch Equipment
4. NEMA MG 1 - Motors and Generators

B. National Fire Protection Association:
1. NFPA 110 - Standard for Emergency and Standby Power Systems

1.3 SYSTEM DESCRIPTION

A. Description: Engine generator assembly and accessories to provide source of power for application in accordance with NFPA 110.

B. Capacity: kW Rating per drawings at elevation of 3300 feet above sea level, standby rating using specified engine cooling scheme.

1.4 SUBMITTALS

A. Shop Drawings: Indicate electrical characteristics and connection requirements. Include plan and elevation views with overall and interconnection point dimensions, fuel consumption rate curves at various loads, ventilation and combustion air requirements, electrical diagrams including schematic and interconnection diagrams.

B. Product Data: Submit data showing dimensions, weights, ratings, interconnection points, and internal wiring diagrams for engine, generator, control panel, transfer switch, battery, battery rack, battery charger, exhaust silencer, and vibration isolators.

C. Test Reports: Indicate results of performance testing.

D. Manufacturer's Field Reports: Indicate inspections, findings, and recommendations.

1.5 CLOSEOUT SUBMITTALS

A. Operation and Maintenance Data: Submit instructions and service manuals for normal operation, routine maintenance, oil sampling and analysis for engine wear, and emergency maintenance procedures.

1.6 QUALIFICATIONS

A. Manufacturer: Company specializing in manufacturing products specified in this section with minimum three years.

1.7 WARRANTY

A. Furnish parts and labor warranty for 12 months after final acceptance of the system.

1.8 MAINTENANCE MATERIALS

A. Furnish one set of tools required for preventative maintenance of engine generator system. Package tools in adequately sized metal tool box.

B. Furnish two of each fuel, oil and air filter element.

PART 2 - PRODUCTS

2.1 SERVICE CONDITIONS

A. Temperature: 100 degrees F.

B. Altitude: 3,300 feet.

2.2 ENGINE

A. Manufacturers:
1. Generac
2. Cummins
3. Stewart & Stevenson.
4. Onan
5. Approved equal

B. Product Description: Water-cooled in-line or V-type, four-stroke cycle internal combustion engine.

C. Rating: Sufficient to operate under 10 percent overload for one hour in ambient of 100 degrees F at elevation of 3300 feet.

D. Fuel System: No. 2 Fuel Oil (Diesel)

E. Engine speed: 3600 rpm.

F. Safety Devices: Engine shutdown on high water temperature, low oil pressure, over speed, and engine over crank. Limits as selected by Manufacturer.

G. Engine Starting: DC starting system with positive engagement, number and voltage of starter motors in accordance with Manufacturer's instructions. Furnish remote starting control circuit, with MANUAL-OFF-REMOTE selector switch on engine-generator control panel.

H. Engine Jacket Heater: Thermal circulation type water heater with integral thermostatic control, sized to maintain engine jacket water at 90 degrees F, and suitable for operation on 120 volts AC.

I. Radiator: Radiator using glycol coolant, with blower type fan, sized to maintain safe engine temperature in ambient temperature of 110 degrees F. Radiator air flow restriction 0.5 inches of water maximum.

J. Engine Accessories: Fuel filter, lube oil filter, intake air filter, lube oil cooler, fuel transfer pump, fuel priming pump, gear-driven water pump. Furnish water temperature gage and lube oil pressure gage on engine/generator control panel.

K. Mounting: Furnish unit with suitable spring-type vibration isolators and mount on structural steel base.

2.3 GENERATOR

A. Manufacturers:
1. Generac
2. Cummins
3. Stewart & Stevenson
4. Onan
5. Approved equal

B. Product Description: NEMA MG1, three phase, four pole, re-connectable brushless synchronous generator with brushless exciter.

C. Rating: kW per drawings, at 0.8 power factor, 208Y/120 volts, 3 phase, 4 wire, 60 Hz.

D. Insulation Class: F.

E. Temperature Rise: 130 degrees C Standby.

F. Enclosure: NEMA MG1, open drip proof.

G. Voltage Regulation: Furnish generator mounted volts per hertz exciter-regulator to match engine and generator characteristics, with voltage regulation plus or minus 1 percent from no load to full load. Furnish manual controls to adjust voltage droop, voltage level (plus or minus 5 percent) and voltage gain.

2.4 GOVERNOR

A. Product Description: Electronic governor to maintain engine speed within 0.5 percent, steady state, and 5 percent, no load to full load, with recovery to steady state within 2 seconds following sudden load changes. Equip governor with means for manual operation and adjustment.

2.5 AUTOMATIC TRANSFER SWITCH

A. Manufacturers:
   1. Generac
   2. Cummins
   3. Stewart & Stevenson
   4. Onan
   5. Approved equal

B. Product Description: NEMA ICS 10, automatic transfer switch.

C. Configuration: Electrically operated, mechanically held transfer switch.

D. Interrupting Capacity: 100 percent of continuous rating.

E. Withstand Current Rating: 50,000 rms symmetrical amperes, when used with molded case circuit breaker.

F. Control Features and Functions:
   1. Indicating Lights: Mount in cover of enclosure to indicate NORMAL SOURCE AVAILABLE, ALTERNATE SOURCE AVAILABLE, switch position.
   2. Test Switch: Mount in cover of enclosure to simulate failure of normal source.
   3. Return to Normal Switch: Mount in cover of enclosure to initiate manual transfer from alternate source to normal source.
   4. Transfer Switch Auxiliary Contacts: 1 normally open; 1 normally closed.
   5. Normal Source Monitor: Monitor each line of normal source voltage and frequency; initiate transfer when voltage drops below 85 percent or frequency varies more than 3 percent from rated nominal value.
   6. Alternate Source Monitor: Monitor alternate source voltage and frequency; inhibit transfer when voltage is below 85 percent or frequency varies more than 3 percent from rated nominal value.
   7. Switched Neutral: Overlapping contacts.

G. Automatic Sequence of Operation:
   1. Initiate Time Delay to Start Alternate Source Engine Generator: Upon initiation by normal source monitor.
   2. Time Delay To Start Alternate Source Engine Generator: 0 to 30 seconds, adjustable.
   3. Initiate Transfer Load to Alternate Source: Upon initiation by normal source monitor and permission by alternate source monitor.
   4. Time Delay Before Transfer to Alternate Power Source: 0 to 30 seconds, adjustable.

5. Initiate Retransfer Load to Normal Source: Upon permission by normal source monitor.
6. Time Delay Before Transfer to Normal Power: 0 to 30 seconds, adjustable; bypass time delay in event of alternate source failure.

H. Time Delay Before Engine Shut Down: 0 to 30 minutes, adjustable, of unloaded operation.

I. Engine Exerciser: Start engine every 7 days; run for 30 minutes before shutting down. Bypass exerciser control when normal source fails during exercising period.

J. Enclosure:
1. Enclosure: ICS 10, Type 1
2. Finish: Manufacturer's standard gray enamel

2.6 ACCESSORIES

A. Skid-Mounted Fuel Tank: Double wall, Steel base tank, with fill and vent and low fuel alarm, sized for 48 hours full load operation.

B. Exhaust Silencer: Critical type silencer, with muffler companion flanges and flexible stainless steel exhaust fitting, sized in accordance with engine Manufacturer's instructions.

C. Batteries: Heavy duty, diesel starting type, lead-acid storage batteries, 170 ampere-hours minimum capacity. Match battery voltage to starting system. Furnish cables and clamps.

D. Battery Tray: Treated for electrolyte resistance, constructed to contain spillage.

E. Battery Charger: Current limiting type designed to float at 2.17 volts for each cell and equalize at 2.33 volts for each cell. Furnish overload protection, full wave rectifier, DC voltmeter and ammeter, and 120 volts AC fused input. Furnish wall mounted enclosure to meet NEMA 250, Type 1 requirements.

F. Line Circuit Breaker: NEMA AB 1 molded case circuit breaker on generator output with integral thermal and instantaneous magnetic trip in each pole. Furnish battery voltage operated shunt trip, connected to open circuit breaker on engine failure. Unit mounts in enclosure to meet NEMA 250, Type 1 requirements.

G. Engine-Generator Control Panel: NEMA 250, Type 1 generator-mounted control panel enclosure with engine and generator controls and indicators. Furnish provision for padlock and the following equipment and features:
1. Frequency Meter: 45-65 Hz. range, 3.5 inch dial
2. AC Output Voltmeter: 3.5 inch dial, 2 percent accuracy, with phase selector switch
3. AC Output Ammeter: 3.5 inch dial, 2 percent accuracy, with phase selector switch
4. Output voltage adjustment

5. Push-to-test indicator lamps, one each for low oil pressure, high water temperature, over speed, low fuel level, and over crank
6. Engine start/stop selector switch
7. Engine running time meter
8. Oil pressure gage
9. Water temperature gage
10. Auxiliary Relay: 3PDT, operates when engine runs, with contact terminals pre-wired to terminal strip
11. Additional visual indicators and alarms in accordance with by NFPA 110
12. Remote Alarm Contacts: Factory wire SPDT contacts to terminal strip for remote alarm functions in accordance with NFPA 110

H. Remote Annunciator Panel: Flush mounted panel with brushed stainless steel finish. Furnish audible and visible indicators and alarms in accordance with NFPA 110.

I. Weather-protective Enclosure: Reinforced steel housing allowing access to control panel and service points, with lockable doors and panels. Furnish fixed louvers, fuel tank, battery rack, and silencer.

2.7 SOURCE QUALITY CONTROL

A. Provide shop inspection and testing of completed assembly.

PART 3 - EXECUTION

3.1 INSTALLATION

A. Install engraved plastic nameplates in accordance with Section 16075.

B. Install Generator Set on concrete pad detailed in the plans. Anchor base frame to pad in accordance with Manufacturer’s recommendations.

C. Ground and bond generator and other electrical system components in accordance with Section 16060.

3.2 MANUFACTURER'S FIELD SERVICES

A. Before the work is accepted, an authorized representative of the Manufacturer shall personally inspect the installation and operation of the equipment to determine that it is properly installed and in proper operating order. The qualifications of the representative shall be appropriate to the technical requirements of the installation and shall be submitted to the owner for approval. The decision of the owner concerning the appropriateness of the representative shall be final. Testing and checking shall be accomplished during the course of the work where required by work being concealed, and at the completion of the work otherwise. In addition, the Contractor shall submit to the Design Engineer a signed statement from the representative certifying as follows: “I certify that the materials and/or equipment listed below have been personally inspected

by the undersigned authorized Manufacturer's representative and is properly installed and operating in accordance with the Manufacturer's recommendations".

B. Start-up of the equipment shall be performed by the authorized representative of the Manufacturer.

3.3 ADJUSTING

A. Adjust generator output voltage and engine speed to meet specified ratings.

3.4 CLEANING

A. Clean engine and generator surfaces. Replace oil and fuel filters with new.

3.5 DEMONSTRATION AND TRAINING

A. Furnish 8 hours of instruction each for two persons, to be conducted at project site with Manufacturer's representative.

B. Simulate power outage by interrupting normal source, and demonstrate system operates to provide standby power.

END OF SECTION

SECTION 16411

ENCLOSED SWITCHES

PART 1 - GENERAL

1.1 SUMMARY

A. Section includes fusible and non-fusible switches.

B. Related Sections:
1. Section 16010 - Basic Electrical Requirements
2. Section 16060 - Grounding and Bonding
3. Section 16075 - Electrical Identification
4. Section 16491 - Fuses

1.2 REFERENCES

A. National Electrical Manufacturers Association:
1. NEMA FU 1 - Low Voltage Cartridge Fuses
2. NEMA KS 1 - Enclosed and Miscellaneous Distribution Equipment Switches (600 Volts Maximum)

B. International Electrical Testing Association:
1. NETA ATS - Acceptance Testing Specifications for Electrical Power Distribution Equipment and Systems.

1.3 SUBMITTALS

A. Product Data: Submit switch ratings and enclosure dimensions.

1.4 QUALIFICATIONS

A. Manufacturer: Company specializing in manufacturing products specified in this section with minimum three years documented experience.

PART 2 - PRODUCTS

2.1 FUSIBLE SWITCH ASSEMBLIES

A. Manufacturers:
1. GE Electrical
2. Cutler Hammer
3. Square D

B. Product Description: NEMA KS 1, Type HD, horsepower rated enclosed load interrupter knife switch. Handle lockable in OFF position.

C. Fuse clips: Designed to accommodate NEMA FU 1, Class R fuses.

D. Enclosure: NEMA KS 1, to meet conditions. Fabricate enclosure from steel finished with Manufacturer's standard gray enamel.

1. Interior Dry Locations: Type 1
2. Exterior Locations: Type 3R

E. Service Entrance: Switches identified for use as service equipment are to be labeled for this application. Furnish solid neutral assembly and equipment ground bar.

F. Furnish switches with entirely copper current carrying parts.

2.2 NONFUSIBLE SWITCH ASSEMBLIES

A. Manufacturers:
1. GE Electrical
2. Cutler Hammer
3. Square D

B. Product Description: NEMA KS 1, Type HD, horsepower rated enclosed load interrupter knife switch. Handle lockable in OFF position.

C. Enclosure: NEMA KS 1, to meet conditions. Fabricate enclosure from steel finished with Manufacturer's standard gray.
1. Interior Dry Locations: Type 1
2. Exterior Locations: Type 3R

D. Service Entrance: Switches identified for use as service equipment are to be labeled for this application. Furnish solid neutral assembly and equipment ground bar.

E. Furnish switches with entirely copper current carrying parts.

2.3 SWITCH RATINGS

A. Switch Rating: Horsepower rated for AC or DC as indicated on Drawings.

B. Short Circuit Current Rating: UL listed for 200,000 rms symmetrical amperes when used with or protected by Class R.

PART 3 - EXECUTION

3.1 INSTALLATION

A. Install enclosed switches plumb. Provide supports in accordance with Section 16070.

B. Height: 5 feet to operating handle or as noted on the drawings.

C. Install fuses for fusible disconnect switches. Refer to Section 16491 for product requirements.

D. Install engraved plastic nameplates in accordance with Section 16075.

E. Apply adhesive tag on inside door of each fused switch indicating NEMA fuse class and size installed.

END OF SECTION

SECTION 16442

PANELBOARDS

PART 1 - GENERAL

1.1 SUMMARY

A. Section includes distribution and branch circuit panel boards.

B. Related Sections:
1. Section 16060 - Grounding and Bonding
2. Section 16075 - Electrical Identification
3. Section 16491 - Fuses
4. Section 16010 – Basic Electrical Requirements

1.2 REFERENCES

A. National Electrical Manufacturers Association:
1. NEMA AB 1 - Molded Case Circuit Breakers and Molded Case Switches
2. NEMA PB 1 - Panelboards
3. NEMA PB 1.1 - General Instructions for Proper Installation, Operation, and Maintenance of Panelboards Rated 600 Volts or Less

B. National Fire Protection Association:
1. NFPA 70 - National Electrical Code

C. Underwriters Laboratories Inc.:
1. UL 67 - Safety for Panelboards

1.3 SUBMITTALS

A. Shop Drawings: Indicate outline and support point dimensions, voltage, main bus ampacity, integrated short circuit ampere rating, circuit breaker and fusible switch arrangement and sizes.

B. Product Data: Submit catalog data showing specified features of standard products.

1.4 CLOSEOUT SUBMITTALS

A. Project Record Documents: Record actual locations of panelboards and record actual circuiting arrangements.

B. Operation and Maintenance Data: Submit spare parts listing; source and current prices of replacement parts and supplies; and recommended maintenance procedures and intervals.

1.5 QUALIFICATIONS

A. Manufacturer: Company specializing in manufacturing products specified in this section with minimum three years experience.

1.6 MAINTENANCE MATERIALS

A. Furnish two of each panelboard key. Panelboards keyed alike.

PART 2 - PRODUCTS

2.1 DISTRIBUTION PANELBOARDS

A. Manufacturers:
1. Square D
2. Cutler Hammer
3. General Electric
4. Substitutions: Section 01630 - Product Requirements
5. All distribution panel boards shall be supplied from the same Manufacturer

B. Product Description: NEMA PB 1, circuit breaker type panel board.

C. Service Conditions:
1. Temperature: 100 degrees F
2. Altitude: 200 feet above sea level

D. Panelboard Bus: Copper, current carrying components including main feeder connection lugs, ratings as indicated on Drawings. Furnish copper neutral and copper ground bus in each panelboard. Furnish insulated copper ground bus as indicated on Drawings.

E. Minimum integrated short circuit rating: 25,000 amperes rms symmetrical for 208 volt panel boards or as indicated on Drawings.

F. Molded Case Circuit Breakers: NEMA AB 1, bolt-on, circuit breakers with integral thermal and instantaneous magnetic trip in each pole. Furnish circuit breakers UL listed as Type HACR for air conditioning equipment branch circuits.

G. Circuit Breaker Accessories: Trip units and auxiliary switches as indicated on Drawings.

H. Enclosure: NEMA PB 1, Type 1 in interior areas and Type 3R in exterior areas.

I. Cabinet Front: Surface hinged trim with door and flush lock, metal directory frame, finished in Manufacturer's standard gray enamel. Trim shall have a piano hinge on one side with a door that opens with a single latch.

2.2 BRANCH CIRCUIT PANELBOARDS

A. Manufacturers:
1. GE Electrical Model
2. Cutler Hammer
3. Square D
4. Substitutions: Section 01630 - Product Requirements
5. All branch circuit panel boards shall be supplied from the same Manufacturer

B. Product Description: NEMA PB1, circuit breaker type, lighting and appliance branch circuit panelboard.

C. Panelboard Bus: Copper, current carrying components including main feeder connection lugs, ratings as indicated on Drawings. Furnish copper neutral and copper ground bus in each panel board. Furnish insulated copper ground bus as indicated on Drawings.

D. Minimum Integrated Short Circuit Rating: 10,000 amperes rms symmetrical for 240 volt rated panel boards, or as indicated on Drawings.

E. Molded Case Circuit Breakers: NEMA AB 1, bolt-on type thermal magnetic trip circuit breakers, with common trip handle for all poles, listed as Type SWD for lighting circuits, Type HACR for air conditioning equipment circuits. Do not use tandem circuit breakers.

F. Enclosure: NEMA PB 1, Type 1 in interior areas and Type 3R in exterior areas.

G. Cabinet Front: Supply hinged trim with door and flush lock, metal directory frame finished in Manufacturer's standard gray enamel. Trim shall have a piano hinge on one side with a door that opens with a single latch.

PART 3 - EXECUTION

3.1 INSTALLATION

A. Install panel boards in accordance with NEMA PB 1.1.

B. Install panelboards plumb.

C. Install recessed panelboards flush with wall finishes.

D. Height: 6 feet to top of panel board; install panel boards taller than 6 feet with bottom no more than 4 inches above floor.

E. Install filler plates for unused spaces in panelboards.

F. Provide typed circuit directory for each branch circuit panel board. Revise directory to reflect circuiting changes to balance phase loads.

G. Install engraved plastic nameplates in accordance with Section 16075.

H. Install spare conduits out of each recessed panelboard to accessible location above ceiling. Minimum spare conduits: 3 empty 1 inch. Identify each as SPARE.

I. Ground and bond panelboard enclosure according to Section 16060. Connect equipment ground bars of panels in accordance with latest edition of NFPA 70.

J. Perform switch inspections and tests listed in NETA ATS, Section 7.5.

K. Perform controller inspections and tests listed in NETA ATS, Section 7.16.1.

3.2 ADJUSTING

A. Measure steady state load currents at each panelboard feeder; rearrange circuits in panelboard to balance phase loads to within 20 percent of each other. Maintain proper phasing for multi-wire branch circuits.

END OF SECTION

SECTION 16491

FUSES

PART 1 - GENERAL

1.1 SUMMARY: Section includes fuses.

1.2 RELATED SECTIONS

A. 16010 – Basic Electrical Requirements

B. 16411 - Enclosed Switches

1.3 REFERENCES

A. National Electrical Manufacturers Association:
1. NEMA FU 1 - Low Voltage Cartridge Fuses.

1.4 FUSE PERFORMANCE REQUIREMENTS

A. Main Service Switches Larger than 600 amperes: Class L (fast-acting)

B. Main Service Switches: Class RK5, Dual Element, Time Delay

C. Power Load Feeder Switches: RK5, Dual Element, Time Delay

D. Motor Load Feeder Switches: Class RK1, Low Peak, Dual Element, Time Delay

E. Lighting Load Feeder Switches: RK5, Dual Element, Time Delay

F. Other Feeder Switches: RK5, Dual Element, Time Delay

G. General Purpose Branch Circuits: Class RK1, Low Peak, Dual Element, Time Delay

H. Control Circuits: Supply control circuit fuses per equipment Manufacturer’s recommendations.

1.5 SUBMITTALS

A. Product Data: Submit data sheets showing electrical characteristics, including time-current curves.

1.6 CLOSEOUT SUBMITTALS

A. Project Record Documents: Record actual sizes, ratings, and locations of fuses.

1.7 QUALIFICATIONS

A. Manufacturer: Company specializing in manufacturing products specified in this section with minimum three years experience.

1.8 MAINTENANCE MATERIALS

A. Furnish two fuse pullers for each size fuse on the project.

1.9 EXTRA MATERIALS

A. Furnish six spare fuses of each Class, size, and rating installed.

PART 2 - PRODUCTS

2.1 FUSES

A. Manufacturers:
   1. Bussman
   2. Shawmut
   3. Approved equal

B. Dimensions and Performance: NEMA FU 1, Class as specified or as indicated on Drawings.

C. Voltage: Rating suitable for circuit phase-to-phase voltage.

PART 3 - EXECUTION

3.1 INSTALLATION

A. Install fuse with label oriented so Manufacturer, type, and size are easily read.

END OF SECTION

SECTION 16510

INTERIOR LUMINAIRES

PART 1 - GENERAL

1.1 SUMMARY

A. Section includes interior luminaires, lamps, ballasts, and accessories.

B. Related Sections:
1. Section 16530 - Emergency Lighting
2. Section 16010 – Basic Electrical Requirements

1.2 REFERENCES

A. American National Standards Institute:
1. ANSI C82.1 - American National Standard for Lamp Ballast-Line Frequency Fluorescent Lamp Ballast
2. ANSI C82.4 - American National Standard for Ballasts-for High-Intensity-Discharge and Low-Pressure Sodium Lamps (Multiple-Supply Type)

1.3 SUBMITTALS

A. Shop Drawings: Indicate dimensions and components for each luminaire not standard product of Manufacturer.

B. Product Data: Submit dimensions, ratings, and performance data.

1.4 QUALIFICATIONS

A. Manufacturer: Company specializing in manufacturing products specified in this section with minimum three years experience.

1.5 FIELD MEASUREMENTS

A. Verify field measurements prior to fabrication.

PART 2 - PRODUCTS

2.1 INTERIOR LUMINAIRES

A. Product Description: Complete interior luminaire assemblies, with features, options, and accessories as scheduled.

2.2 FLUORESCENT BALLASTS

A. Product Description: Electronic ballast less than 20 percent THD suitable for lamps specified, with voltage to match luminaire voltage.

2.3 HIGH INTENSITY DISCHARGE (HID) BALLASTS

A. Product Description: ANSI C82.4, metal halide lamp ballast, suitable for lamp specified, with voltage to match luminaire voltage.

2.4 FLUORESCENT LAMPS

A. Manufacturers: All linear fluorescent lamps shall be from the same Manufacturer.
   1. General Electric
   2. Philips
   3. Osram/Sylvania
   4. Substitutions: Section 01630 - Product Requirements

2.5 HID LAMPS

A. Manufacturers: All HID lamps shall be from the same Manufacturer.
   1. General Electric
   2. Philips
   3. Osram/Sylvania
   4. Substitutions: Section 01630 - Product Requirements

PART 3 - EXECUTION

3.1 INSTALLATION

A. Install suspended luminaires using pendants supported from swivel hangers. Install pendant length required to suspend luminaire at indicated height.

B. Support luminaires larger than 2 x 4 foot size independent of ceiling framing.

C. Locate recessed ceiling luminaires as indicated on Drawings.

D. Install surface mounted luminaires plumb and adjust to align with building lines and with each other. Secure to prevent movement.

E. Install recessed luminaires to permit removal from below.

F. Install recessed luminaires using accessories and fire-stopping materials to meet regulatory requirements for fire rating.

G. Install clips to secure recessed grid-supported luminaires in place.

H. Install wall-mounted luminaires at height as indicated on Drawings.

I. Install accessories furnished with each luminaire.

J. Connect luminaires to branch circuit outlets provided under Section 16130 using flexible conduit.

K. Make wiring connections to branch circuit using building wire with insulation suitable for temperature conditions within luminaire.

L. Install specified lamps in each luminaire.

M. Ground and bond interior luminaires in accordance with Section 16060.

3.2 FIELD QUALITY CONTROL

A. Operate each luminaire after installation and connection. Inspect for proper connection and operation.

3.3 ADJUSTING

A. Aim and adjust luminaires.

3.4 CLEANING

A. Remove dirt and debris from enclosures.

B. Clean photometric control surfaces as recommended by Manufacturer.

C. Clean finishes and touch up damage.

3.5 SPARE LAMPS

A. Re-lamp all incandescent or filament type luminaries at Substantial Completion.

B. Provide spare lamps as follows:
1. HID Lamps: Four spare lamps of each size and type
2. Linear Fluorescent: Eight spare lamps of each size, type, and color
3. Compact Fluorescent: Four spare lamps of each size, type, and color
4. Incandescent, Quartz, Halogen: Eight spare lamps of each size and type

3.6 SCHEDULES

A. See schedule on drawings.

END OF SECTION

SECTION 16520

EXTERIOR LUMINAIRES

PART 1 - GENERAL

1.1 SUMMARY

A. Section includes exterior luminaires, poles, and accessories.

1.2 RELATED SECTIONS

A. 16010 – Basic Electrical Requirements

1.3 SUBMITTALS

A. Product Data: Submit dimensions, ratings, and performance data.

1.4 QUALIFICATIONS

A. Manufacturer: Company specializing in manufacturing products specified in this section with minimum three years experience.

1.5 COORDINATION

A. Furnish bolt templates and pole mounting accessories to installer of pole foundations.

PART 2 - PRODUCTS

2.1 LUMINAIRES

A. Product Description: Complete exterior luminaire assemblies, with features, options, and accessories as scheduled on the drawings.

2.2 FLUORESCENT BALLASTS

A. Manufacturers:
   1. Magnetek Inc.
   2. Philips Electronic North America
   3. Advanced
   4. Approved equal

B. Product Description: Electronic ballast certified by Certified Ballast Manufacturers, Inc. to comply with ANSI C82.1, suitable for lamps and environmental conditions specified, with voltage to match luminaire voltage.

2.3 HIGH INTENSITY DISCHARGE (HID) BALLASTS

A. Manufacturers:
1. Magnetek Inc.
2. Philips Electronic North America
3. Advanced
4. Approved equal

B. Product Description: ANSI C82.4, metal halide lamp ballast, suitable for lamp and environmental conditions specified, with voltage to match luminaire voltage.

2.4 FLUORESCENT LAMPS

A. Manufacturers:
1. General Electric Co.
2. Philips Electronics
3. Osram/Sylvania
4. Approved equal

2.5 HID LAMPS

A. Manufacturers:
1. General Electric Co.
2. Philips Electronic
3. Osram/Sylvania
4. Approved equal

2.6 METAL POLES

A. Material and Finish: Steel with polyester powder finish as scheduled in fixture schedule on drawings.

B. Section Shape and Dimensions: Tapered round.

C. Height: As scheduled.

D. Accessories:
1. Handhold
2. Anchor bolts

PART 3 - EXECUTION

3.1 EXAMINATION

A. Verify foundations are ready to receive fixtures.

3.2 INSTALLATION

A. Install concrete bases for lighting poles at locations as indicated on Drawings.

B. Install poles plumb. Grout around each base.

C. Install lamps in each luminaire.

D. Bond and ground luminaires, metal accessories and metal poles in accordance with Section 16060. Install supplementary grounding electrode at each pole.

3.3 FIELD QUALITY CONTROL

A. Operate each luminaire after installation and connection. Inspect for improper connections and operation.

3.4 ADJUSTING

A. Aim and adjust luminaires to provide illumination levels and distribution.

3.5 CLEANING

A. Clean photometric control surfaces as recommended by Manufacturer.

B. Clean finishes and touch up damage.

3.6 PROTECTION OF FINISHED WORK

A. Re-lamp luminaires having failed lamps at Substantial Completion.

3.7 SCHEDULES

A. See schedule on drawings.

END OF SECTION

SECTION 16530

EMERGENCY LIGHTING

PART 1 - GENERAL

1.1 SUMMARY

A. Section includes emergency lighting units and lighted exit signs.

1.2 RELATED SECTIONS

A. 16010 – Basic Electrical Requirements

B. 16510 - Interior Luminaires

1.3 REFERENCES

A. National Electrical Manufacturers Association:
   1. NEMA WD 6 - Wiring Devices-Dimensional Requirements.

1.4 SYSTEM DESCRIPTION

A. Emergency lighting to comply with requirements.

1.5 SUBMITTALS

A. Product Data: Submit dimensions, ratings, and performance data.

1.6 QUALIFICATIONS

A. Manufacturer: Company specializing in manufacturing products specified in this section with minimum three years experience.

PART 2 - PRODUCTS

2.1 EMERGENCY LIGHTING UNITS

A. Product Description: Self-contained emergency lighting unit as scheduled on the drawings.

2.2 EXIT SIGNS

A. Product Description: Exit sign fixture as scheduled on the drawings.

2.3 FLUORESCENT LAMP EMERGENCY POWER SUPPLY

A. Product Description: Emergency battery power supply suitable for installation in ballast compartment of fluorescent luminaire.

B. Lamp Ratings: One F32W lamp providing 1100 lumens, minimum.

C. Include TEST switch and AC ON indicator light, installed to be operable and visible from outside of assembled luminaire.

PART 3 - EXECUTION

3.1 INSTALLATION

A. Install suspended exit signs using pendants supported from swivel hangers. Install pendant length required to suspend sign at indicated height.

B. Install surface-mounted emergency lighting units and exit signs plumb and adjust to align with building lines and with each other. Secure to prevent movement.

C. Install wall-mounted emergency lighting units and exit signs at height as indicated on Drawings.

D. Install accessories furnished with each emergency lighting unit and exit sign.

E. Connect emergency lighting units and exit as indicated on Drawings.

F. Make wiring connections to branch circuit using building wire with insulation suitable for temperature conditions within unit.

G. Install specified lamps in each emergency lighting unit and exit sign.

H. Ground and bond emergency lighting units and exit signs in accordance with Section 16060.

3.2 FIELD QUALITY CONTROL

A. Operate each unit after installation and connection. Inspect for proper connection and operation.

3.3 ADJUSTING

A. Aim and adjust lamp fixtures.

B. Position exit sign directional arrows as indicated on Drawings.

3.4 PROTECTION OF FINISHED WORK

A. Re-lamp emergency lighting units and exit signs having failed lamps at Substantial Completion.

END OF SECTION

SECTION 16710

TELECOMMUNICATIONS EQUIPMENT AND CABLING

PART 1 - GENERAL

1.1 SCOPE OF WORK INCLUDES

A. Telecommunications Contractor (hereafter referred to as Contractor) shall, for a fixed fee, procure and install of all required materials to provide complete and functional telecommunications equipment and cabling system as defined in the accompanying project drawings, notes, and specifications. Contractor shall provide a complete, functional system including all necessary components, whether identified in this Section or not.

B. The work performed under this Section shall be of high quality and performed in a professional manner. The Texas Department of Transportation (Owner) reserves the right to reject all or a portion of the work performed, either on technical or aesthetic grounds.

C. Contractor shall, through coordination with the Owner or the Owner's Representative, provide materials and labor to result in an installed and tested, complete and working telecommunication cabling system as depicted within the project drawings/notes, and as described herein.

D. This Section of the Project documentation identifies the components, Manufacturers, and the acceptable installation standards for such components. Component identifications are included within this Section whether they are included in this project or not. Using the project drawings/notes, the Contractor shall determine which components do not need to be included and installed. Before beginning any work on the project, the Contractor shall provide a list of excluded components to the Owner or the Owner's Representative.

E. The Contractor shall initiate contact with and coordinate with the local telephone company to ensure that a standard Regulated Service Entrance or acceptable substitute is available and adequate to support the number of devices called for in the drawings. The Regulated Service Entrance includes the termination, lightning protection, and Telephone Company demarcation equipment and must be installed in compliance with all applicable codes and standards. Contractor shall provide and install punch blocks, back boards, multi-pair distribution cable, Cat-3 or Cat-5 compliant station wiring, ladder rack and/or J-hook assemblies, termination devices, and whatever else is needed to provide voice services at locations as depicted within the project drawings and notes. The drawings and notes depict routing, termination points, and other pertinent information.

F. Contractor shall provide and install device mounting racks, Cat-5 compliant station wiring, ladder rack and/or J-hook assemblies, patch panels, station outlet boxes, termination devices, and whatever else is needed to provide high speed data services at locations as depicted within the project drawings and notes. The drawings and notes depict routing, termination points, and other pertinent information.

G. Horizontal Cat-5 UTP 4-pair blue-jacketed station cable shall be provided and installed as depicted on the drawings (denoted as "data"). Installed data station cables shall be placed within conduit, Cat-5 compliant cable clips, cable raceway, and/or cable ladder rack. Data station cables shall be routed from each outlet as shown on the drawings to the hub room as shown on the drawings. Data station cables shall be homerun from point to point with no splices. Data station cables shall be terminated on EIA/TIA-568-A Cat-5 compliant 8-position/8-conductor (8P8C) modular jacks utilizing T568B wiring pin-outs at the user end, and on EIA/TIA-568-A Cat-5 compliant 8P8C 24-port patch panels utilizing T568B wiring pin-outs within the hub room rack mounted patch panels.

H. Horizontal Cat-3 UTP 4-pair white-jacketed station cable shall be provided and installed as depicted on the drawings (denoted as "voice"). Installed voice station cables shall be placed within conduit, Cat-3/5 compliant cable clips, cable raceway, and/or cable ladder rack. Voice station cables shall be routed from each outlet as shown on the drawings to the punch blocks located within the hub room as shown on the drawings. Voice station cables shall be homerun from point to point with no splices. Each voice station cable shall be terminated on two (2) 6-position/6-conductor (6P6C) modular jacks at each outlet as indicated on the drawing details at the user end, and on 66M150 termination blocks within the hub room.

I. Exact layouts of fixed wall offices, conference rooms, and modular furniture outlet placements shall be as provided by the Owner. In base bid, Contractor shall provide pricing based on the number of new outlets and reinstalled outlets shown on the drawings.

J. Except as otherwise shown on the drawings, each fixed wall outlet shall include two (2) 4-pair Cat-5 cables for data applications, terminated on Cat-5 compliant jacks, and one (1) 4-pair Cat-3 cable for voice applications, terminated on two (2) voice grade jacks per the drawing details. Other outlets shall be configured as shown on the drawing details.

K. Voice cable backboards shall be color-coded strictly per this Specification. Horizontal station cable backboards shall be blue; Riser backboards shall be green; Cross-connect backboards shall be white and include wire spool type cable management for cross connect routing as shown on the drawing details. If all of the voice cabling is installed on one backboard, the backboard shall be painted white and the wire spools and punch-down blocks shall be colored coded to identify use.

L. Telecommunications cabling system ground shall be single point, terminating at the Building Electrical Service Entrance Ground per the National Electrical Code. Grounding connectivity shall be in accordance with TIA/EIA TSB 67 and the National Electrical Code. Grounding for all voice riser cables, equipment racks, termination hardware, and related equipment shall be provided and placed by the Contractor.

M. Equipment racks, backboards, termination hardware, cable and wire management hardware, cable labeling, grounding conductors and termination, and all other ancillary equipment required to provide a complete and working telecommunication system shall be provided and installed.

N. Upon completion of installation of conduit, cable, and other components, Contractor shall firestop all penetrations through fire-rated barriers, panels, walls, floors, ceilings, and

other partitions. Firestopping used must conform to an approved UL-listed firestopping system, and specific application of system components as set forth in an approved installation diagram. All system components, as well as specific UL-approved installation configuration diagram must be submitted prior to Contractor beginning any installation of cable, conduit, or other material. Any system submitted for installation must meet the codes and standards set forth below as a minimum. Contractor may exceed requirements if, in Contractor's judgment and with the Owner or the Owner's Representative acceptance, superior or more economical designs or materials are available for successful and continuous operation of the equipment as required by this Specification. Installed firestopping must meet requirements of applicable governing regulatory bodies and codes and must pass inspection by local authorities.

O. The entire cabling system shall be machine labeled with all cables numbered and terminated sequentially. The entire cabling system shall be tested and documented as specified herein and warranted to be free from defects in materials and workmanship and capable of transmitting standards based network applications regardless of protocol or network equipment Manufacturer for a period of 10 years. Warranty period commences upon Owner's first use of complete installed system or upon Owner's written acceptance of completed installation, whichever occurs first.

P. Contractor shall prepare and submit record documentation and final As-Built drawings in both hard copy and electronic form as prescribed within the project specifications.

1.2 REFERENCE STANDARDS: The following codes and standards set forth the minimum requirements which may be exceeded by the Contractor if, in the Contractor's judgment and with Owner's acceptance, superior or more economical designs or materials are available for successful and continuous operation of the equipment as required by this Specification:

A. The cable system shall meet the standards set forth in the American National Standards Institute / Electronic Industries Association / Telecommunications Industry Association recommended standards EIA/TIA-568-A, -569, -570, -606, -607, and EIA/TIA-TSB 67, 72.

B. All cables installed under this Specification shall be Underwriters' Laboratories (UL) listed and certified to pass the appropriate UL test for cable designated for installation in plenum and riser spaces per application.

C. The telecommunication cable system shall conform to all local codes and ordinances set forth by local jurisdictions as well as applicable sections of the National Electrical Code, NFPA-70-1996.

D. Firestopping shall be in accordance with ASTM E 814, ASTM E 136, and UL 1479 as well as Section 300-21 of the National Electrical Code.

E. Other applicable standards:
1. ANSI C2-1996 National Electrical Safety Code
2. UL 497 Electrical Grounding and Bonding Equipment
3. FCC Rules and Regulations, Part 68
4. All local codes as adopted by local governmental bodies and the State of Texas
5. Basic, Uniform, and Standard Building Codes (BOCA, ICBO, SSBC)

6. REA Cable Designations - PE Series Specifications
7. NFPA 101 - Life Safety Code

1.3 CONTRACT DRAWINGS AND SPECIFICATIONS

A. The intent of the drawings and specifications is to establish the type of system and functions, but not to set forth each specific item essential to the functioning of the system. The drawings are generally diagrammatic and show approximate location and extent of work. In case of doubt of work intended, it is the responsibility of the Contractor to request instructions from the Owner or the Owner's Representative. The Contractor shall be responsible for installing a complete functioning system.

B. Contractor shall review all drawings and specifications before commencing work. Where discrepancies occur, Contractor shall immediately notify the Owner or the Owner's Representative for clarification.

1.4 SUBMITTALS

A. Prior to ordering any material, provide four (4) copies of complete brochure information on all products for installation on this project. All brochures and specification sheets shall be bound within a three-ring loose leaf binder and organized in the same manner as the Products portion of the Specifications. If more than one product is listed on the same page of the brochure or specification sheet submitted, the intended product or part number shall be clearly indicated or highlighted by the Contractor.

B. Contractor shall submit Proposed Test Procedures and a sample of the printout or test result form, as well as a list of all Test Equipment to be used for cable testing.

C. Contractor shall submit a Proposed Labeling and Cable Identification Scheme describing the outlet labeling, patch panel labeling, fiber patch panel labeling, voice termination labeling, and all cable end labeling procedures and samples.

D. If the Contractor routes telecommunications cables through fire rated walls or other fire rated elements, the Contractor shall submit a Proposed Firestopping System plan and method for approval prior to beginning the firestopping portion of the work.

1.5 RECORD DRAWINGS: Contractor shall maintain one set of drawings on site to continually and accurately record the as-constructed work. The mark-up drawings shall accurately indicate locations of all equipment, pull-boxes, conduits, cable types, cable routing, cable labeling, outlet locations, and outlet labeling. All record drawings shall be maintained and updated daily and made available for inspection at any time during the course of the work by the Owner or the Owner's Representative. At project completion Contractor shall deliver drawings and documentation of the project, in both hard copy and in AutoCAD V12 or later format, to minimally include:

A. As-built telecommunications floor plans of the facility with entire contracted cable and outlet placement along with the outlet labeling scheme clearly depicted.

B. As-built logical riser diagram describing connectivity and cable sizes for both telecommunications and grounding cabling systems.

C. Cable test results submitted in both hard copy and magnetic format along with viewing software from the tester Manufacturer. Hard copy to be bound within loose-leaf binder neatly organized according to the test type and medium as identified in the Testing portion of this Specification.

PART 2 - PRODUCTS

2.1 GENERAL

A. Materials and equipment provided must be new products of Manufacturers regularly engaged in the production of such products.

B. Products must be UL listed where a UL test procedure is applicable.

C. Substitutions of any equipment from the Approved Manufacturers listing of each product must be approved by the TxDOT Information Systems Division person assigned to this Project. Requests for substitutions must be submitted in writing and state which component is being requested for substitution, and include supporting documentation proving equivalency to all parameters of listed components.

2.2 TELECOMMUNICATIONS CABLES

A. Multi-pair Copper Distribution Cable
   1. Multi-pair Copper Voice Distribution Cable shall be used to provide connectivity between the new network interface device in the telecommunications room of the office building to existing telecommunications backboard in the electric room in the existing shop building. Suitable cable support apparatus shall be provided where a part of cable run is not placed in conduit.
   2. Telephone Distribution Cable, 25 pair, 22 AWG, with PVC jacket for conduit placement.
   3. Cable shall be constructed of 22 AWG solid annealed and individually insulated copper conductors with a PVC outer jacket. The insulated conductors shall be twisted into pairs of varying lengths to minimize crosstalk. The twisted pairs shall be coded using industry standard colors and bound into the drawing specified number of pair groups as per ANSI/ICEA S-80-576.
   4. Cable shall be UL listed Type CMG or CM as required per the installation environment for which it is placed and as outlined in the NEC Sections 800-51(a) and (b) respectively.
   5. Approved Manufacturers:
      a. Lucent
      b. General Cable
      c. Essex Cable
      d. Approved Equivalent

B. Cat-5 Data Station Cables.

1. Cat-5 rated 4-pair UTP Horizontal/Station cables shall provide connectivity from the data patch panel in the telecommunications room to each fixed wall and workstation outlet location as indicated on the project drawings. Each outlet shall be served with the quantity of Cat-5 cables listed per the outlet legend described in the project drawings.
2. Cables shall be constructed of 24 AWG solid annealed and individually insulated copper conductors. The insulated conductors shall be twisted to form non-shielded pairs using standard telephone industry color codes. The outer cable sheath of all data station cables shall be blue.
3. Cables shall be type CMP rated as outlined in the NEC Sections 800-51(a). For plenum rated cables, the conductor insulation of all pairs shall be FEP or Teflon material.
4. Cables shall meet or exceed the minimum structural and electrical characteristics defined within ANSI/TIA/EIA-568-A for Cat-5 cables and shall be acceptable for IEEE 802.3 applications
5. Approved Manufacturers:
    a. Lucent
    b. Berk-Tek
    c. CommScope
    d. Approved Equivalent

C. Cat-3 Voice Station Cables
1. Cat-3 rated 4-pair UTP Horizontal/Station cables shall provide connectivity from the telecommunications room to each auxiliary wire closet and fixed wall and workstation outlet location as indicated on the project drawings. Each outlet shall be served with the quantity of Cat-3 cables listed per the outlet legend described in the project drawings.
2. Cables shall be constructed of 24 AWG solid annealed and individually insulated copper conductors. The insulated conductors shall be twisted to form non-shielded pairs using standard telephone industry color codes. The outer cable sheath of all voice station cables shall be white.
3. Cables shall be type CMP rated as outlined in the NEC Sections 800-51(a).
4. Cables shall meet or exceed the minimum structural and electrical characteristics defined within ANSI/TIA/EIA-568-A for Cat-3 cables and shall be acceptable for IEEE 802.3 applications.
5. Approved Manufacturers:
    a. Lucent
    b. Berk-Tek
    c. CommScope
    d. Approved Equivalent

D. Cross Connect Wire.
1. Contractor shall provide one Reel/Box (1000 ft) of telephone cross-connect wire for installation of cross-connections by the Owner.
2. Wire shall be solid, 24 AWG, two-pair, copper conductors insulated with industry standard color-coded PVC. Provide cross connect wire in reel containing one thousand feet (1000') of wire.
3. Cross Connect Wire shall be of the same Manufacturer as Multi-pair Copper Voice Riser Cable Manufacturer.

E. Grounding Conductor.
1. Bare stranded copper ground conductors shall be provided and installed by the Contractor as shown on the project drawings to provide a grounding system consistent with the 1996 National Electrical Code as well as EIA/TIA 607.
2. Ground conductors shall be minimum 6 AWG between the Building Service Ground point and the hardware components located within the Laboratory hub room.

2.3 TERMINATION EQUIPMENT: Termination equipment shall be provided and installed by the Contractor. Mounting hardware and accessories typically required to provide a complete and working installation shall be provided and installed by the Contractor whether listed herein or not.

A. Cat-5 Patch Panels
1. 19" equipment rack-mounted 24-port modular patch panels shall be provided and installed in the telecommunications room and in any auxiliary wire closets as indicated on the project drawings. Patch panel shall be rated Cat-5 compliant (per ANSI/EIA/TIA-568-A) and shall utilize 8P/8C style non-keyed jacks with T568B pin-out assignments and 110-type termination.
2. Approved Manufacturers:
a. Panduit
b. Approved Equivalent

B. Voice Punch Down Termination and Connecting Blocks
1. Type 66M150 termination/wiring blocks for cross connecting between voice station and Riser cables shall be provided and installed in the telecommunications room and any auxiliary wire closets as shown on the project drawings. 66M150 Style blocks shall be wall mountable and manufactured with standoff legs to allow cables to pass behind. All required connecting blocks (4-pair and 5-pair), and labeling strips shall be included.
2. Approved Manufacturers:
a. Lucent
b. Siemon
c. Approved Equivalent

2.4 TELECOMMUNICATIONS WORKSTATION OUTLETS

A. Telecommunications Workstation Outlets shall be provided at the locations shown on the project drawings. Cabling of all telecommunications outlets is the responsibility of the Contractor. Outlets shall be configured, and labeled as depicted in the project drawings. One Manufacturer shall supply all components for all outlet assemblies.

B. Voice/Data outlets will be of modular design. Faceplates and jack inserts shall be color coordinated per Owner's direction. Each outlet shall be configured with modular Cat-5 compliant 8P/8C jacks wired to the T568B pin assignment sequence and/or modular voice grade 6P/6C jacks wired to a "split-pair" USOC pin assignment per the project details.

C. Any unused faceplate ports shall have blank covers installed.

D. Approved Manufacturers:
   1. Panduit
   2. Approved Equivalent

2.5 CABLE SUPPORT HARDWARE AND MOUNTING EQUIPMENT: Miscellaneous Equipment shall be provided and installed by the Contractor as described below and on the drawings. Mounting hardware and accessories typically required to provide a complete and working installation shall be provided and installed by the Contractor whether listed herein or not.

A. Plywood Backboards: Plywood backboards shall be 4’ x 8’ x ¾” grade CDX plywood mounted with the 8' length placed in the vertical position and securely anchored to wall with fasteners appropriate for the wall construction. Backboards shall be painted white with fire retardant paint as per local code requirements.

B. Termination Backboards: Voice components shall be mounted on Terminal Backboards per the project drawings. Contractor shall utilize Blue (183B1) backboards for station cable termination, Green (183B2) backboards for Riser cable termination, and White (187B1) backboards for all cross connections.

C. Plywood and Termination Backboard Cable Management shall be provided and placed by Contractor on all telecommunications backboards to provide effective routing of all telecommunications cabling. Contractor shall utilize D-rings, Wire Distribution Spools, and Cable Clamps as depicted on the accompanying project drawings.

D. Equipment Rack shall be provided and placed by Contractor as shown on the project drawings. Unit shall be wall mounted and shall be manufactured of aluminum. Nominal equipment rack width shall be 19”. Equipment rack shall conform to EIA Standard RS-310-C.
   1. Approved Manufacturers:
      a. Chatsworth Products
      b. Homaco
      c. Harris
      d. Approved Equivalent

E. Equipment Rack Cable Management: Contractor shall provide and install double-sided vertical and horizontal Cable Management sections to effectively organize, strain relieve, and manage the number of data, station, and patch cables as detailed in the project drawings.
   1. Approved Manufacturers:
      a. Chatsworth Products
      b. Homaco
      c. Ortronics
      d. Approved Equivalent

F. Ground Bars, Lugs, and Clamps: Where applicable, ¼” x 12” x 1” copper ground bars shall be installed on the telecommunications Backboard as shown on the drawings. Ground bars shall be mounted utilizing insulated standoffs. Copper grounding conductors shall be placed per the accompanying drawings to effectively bond each ground bar to the Building Electrical Service Entrance Ground. Equipment racks and any other

telecommunications equipment requiring grounding shall be bonded to the nearest ground bar using industry standard grounding connectors or lugs as recommended by the respective equipment Manufacturer.

1. Approved Manufacturers:
    a. Ground Bar - Newton Instruments Fig. 3059
    b. Approved Equivalent

G. Surface Mounted Raceway.

1. The raceway and all of its fittings and system components shall be nonmetallic, UL-listed with nonflammable self-extinguishing characteristics tested to comparable specifications of UL94V-0.
2. The raceway shall be a two-piece design with a base and a snap-on cover, or one-piece with a plastic hinged cover section. Total width shall be a minimum of 1.5” by 0.75” deep with an approximate thickness of 0.10”. Each channel shall be of sufficient size as to adequately support the number of telecommunications cables required per the outlet configuration(s).
3. Transition fittings shall consist of tees, elbows, cover clips, end fittings, and drop ceiling connectors. Transition fittings shall be of the same Manufacture as the raceway, shall be placed per Manufacturer’s recommendations and installation requirements, and shall be designed for the specific installation application where installed.
4. Approved Manufacturers:
    a. Wiremold
    b. Panduit
    c. Approved Equivalent

H. J-hook Assemblies: Contractor shall comply with the maximum fill and spacing requirements as specified herein and/or shown on the project drawings/notes. Contractor shall provide and install J-hook assemblies as required to meet spacing and fill requirements.

1. J-hook horizontal cable supporting hardware shall be UL listed. The J-hook shall provide a broad flat base for proper cable support, thereby reducing stress and bending of cabling.
2. Contractor shall attach appropriate J-hook fasteners for wall, stud, beam, or flange mounting to the supporting structure. Space fasteners to fall a maximum of 5’ apart and no more than 4’ from the final outlet destination turn point as shown on the project drawings.
3. Approved Product:
    a. Caddy CableCat Clips and Caddy supporting hardware
    b. Approved Equivalent

PART 3 - EXECUTION

3.1 INSTALLATION REQUIREMENTS

A. Contractor shall give notice to all entities requiring advance notification and comply with all regulations specified by all governing agencies having jurisdiction over the performance of the work.

B. Contractor shall coordinate with and abide by the construction schedule and sequencing as dictated by the Owner or the Owner's Representative. Storage and staging areas within the job site shall be as dictated by the Owner or the Owner's Representative.

C. Contractor shall provide and pay for all permits, labor, materials, equipment, tools, utilities, and services necessary for the proper execution and completion of the Telecommunications Cabling System.

D. Contractor shall maintain during construction and submit accurate record construction drawings as described in Section 1.5 Record Drawings within two (2) workdays after completion of construction.

3.2 INSTALLATION METHODS

A. Contractor shall provide and install telecommunications cabling system as detailed by the project drawings, notes, details, specifications, and addenda if so issued. Where specific equipment and cable layouts are provided, it is the Contractors responsibility to install as specified or to provide complete information justifying alternatives prior to beginning work on affected portions of the project.

B. The following prescribes methods, which shall define a minimum level of quality to be maintained throughout the project. By prior written agreement with the Owner, the Contractor may exceed this level of quality; however, the project schedule, budget, and function of the delivered system must be maintained while doing so.

1. Use the maximum possible bending radius on all cables during installation. A radius of curvature greater than the minimum bending radius of the cable per the Manufacturer's specifications shall be maintained at all times.
2. Where placed within conduit, all cables shall be continuously lubricated during the pulling-in process. The maximum pulling tensions specified by the cable Manufacturers shall not be exceeded. Monitor cable-pulling tension with a mechanical tension-meter.
3. Contractor shall use tools and equipment specifically designed for each installation task. The Contractor shall utilize installation practices, which ensure the highest quality installation. Contractor shall perform all cutting, splicing, pulling and termination of cables using equipment specifically designed for that purpose.
4. Contractor shall install tie wraps using a tension-controlling cutting device. Tension shall not exceed that which is specified by the Manufacturer of the cable as being deleterious to the specified performance of the cable. Tie wraps and other securing hardware shall be rated as required for the installation environment.
5. Contractor shall fill conduit with cables with the following guidelines:
    a. Where conduits are stacked, the cabling system Contractor shall fill the bottom raceway to its maximum fill ratio first and then move to the next raceway above it and so on.
    b. Where multiple conduits are being used, the Contractor shall fill one conduit to its maximum fill ratio before going on to the next conduit. The cabling system Contractor shall leave as many spare conduits

available as possible and under no circumstance shall the Contractor leave less than one spare conduit available.

c. The maximum fill ratio for all conduits shall be 40%.

d. The Contractor shall not exceed the maximum fill ratio, per the NEC, for any reason.

e. All spare conduits shall have two (2) pull strings installed and left for future pulling in of cable. The pull strings shall be clearly labeled on each end as "Pulling Line Number 1 and Pulling Line Number 2," and each end shall be clearly labeled to indicate the location of its corresponding opposite end.

6. Contractor shall support cables running overhead that are not installed in raceway or conduit by approved load dispersing “J” hook assemblies, spaced a maximum of 5 feet from each other.
7. Install raceways or conduit system completely before pulling-in cables. Clean interior of each run of conduit before pulling-in cable.
8. Penetrations through walls and floors shall maintain fire resistance rating, per NEC 300-21.
9. Install connectors in conformance with Manufacturer recommended stripping and crimping procedures. Use special tools designed for this purpose.
10. Termination onto patch panels and punch-down onto termination blocks of all station cables shall be in consecutive, as-built, numerical sequence from top to bottom and left to right without skipping any ports or positions. Where applicable, floor number will comprise the high order number of the sequence.
11. Cat-5 installation shall conform strictly to EIA/TIA-568-A and TSB-40B to insure a quality system that meets the transmission rate criteria.
12. Labeling of all telecommunications components shall be as described within the accompanying project drawings and Section 3.4 “Labeling Methods” of this Specification Document. Labeling shall be mechanically produced not handwritten.

3.3 FIRESTOPPING

A. For the purposes of this section the following definitions shall apply:

1. Firestop System means a specific construction consisting of any device intended to close off an opening or penetration during a fire and/or materials that fill an opening in a wall or floor assembly where penetration is by cables, cable trays, conduits, ducts, pipes and any poke through termination device, such as electrical outlet boxes along with their means of support through the wall or the floor opening. (Ref: ASTM E-814)
2. Listed System Design means an informational listing by an Accredited Testing Agency developed from Firestop Systems Reports depicting the correct use and installation of firestop materials. These published listings contain drawings depicting geometry, minimum/maximum dimensions for all the individual components tested including penetration item type and size, annular space, insulating materials used, substrate types and thickness, sealant types and thickness, etc.
3. Fire Resistance Rating means the time in hours or fraction thereof that a material or assembly of materials will withstand the passage of flame and the transmission of heat when exposed to fire under specified conditions of test and performance

criteria, or as determined by extension of interpretation derived therefrom as prescribed in the National Building Code.

4. Service Penetration means any hole or void created in the faces or edges of Fire Separations or Firewalls for Mechanical and Electrical through penetrations or poke through termination devices and/or other building services.
5. Firestop Material means any material used individually or as a component to create an ASTM E-814 Firestop System.

B. Work Included in Firestopping.

1. Work of this section comprises firestop materials and listed systems designs intended to act as firestop systems and smoke seals at openings around penetrations, at unpenetrated openings, at projecting or recessed items, and at openings and joints within and around fire separations and firewalls.
2. All plans involving the installation of the various firestopping systems must be submitted to and approved by the Owner or the Owner's Representative prior to beginning the firestop systems portion of the work.
3. Cable shall at no point pass through an unsealed penetration through a fire-rated barrier.
4. Contractor shall provide seals approved by the UL in all fire rated separations and firewalls to form tight barriers to retard the passage of flame and smoke.
5. The installed seals shall provide and maintain the fire resistance rating of the adjacent floor, wall or other fire separation assembly to the requirements of ASTM E-814 and acceptable to authorities having jurisdiction and the Engineer.
6. Provide the work using competent Installers, experienced in the application of the materials and systems being used, approved and trained by the material or system Manufacturer.
7. Firestop systems shall conform to the (F) and (T) ratings of ASTM E-814 and other local requirements of authorities having jurisdiction.

3.4 LABELING METHODS

A. General: Labeling shall be machine produced or typewritten, self laminating, indelible, and shall be permanently affixed to patch panel ports, termination blocks, and outlet locations, as well as all station and data riser cable ends. Handwritten labels will not be accepted. Contractor shall confirm final, as-built numbers with the Owner or the Owner's Representative prior to labeling. Proposed labeling scheme shall at a minimum meet the following criteria.

B. Labeling of all components within the hub rooms shall be in sequential order.

C. Outlet labels shall provide reference to the final, as-built outlet location and station position. Contractor shall clean outlet faceplates of all dirt and dust prior to applying labels. Provide "Voice" and "Data" descriptors or icons on the proper jacks.

D. Station Cable Labeling: Each station cable label shall possess characters describing the serving patch panel and port position, or serving termination block and position, and the destination room number and station identifier.

E. Voice Distribution Cable Labeling: Each voice distribution cable shall possess characters describing both the serving termination block and position, and destination termination block, and position.

F. Patch Panel Labeling: Each station patch panel port label shall possess characters describing the final, as built room number within which the outlet is located as well as the specific station identifier. Patch panels shall be numbered consecutively from top patch panel in rack to bottom patch panel in rack.

G. Termination Block Labeling: Each station termination block label shall possess characters describing the final, as built, room number within which the outlet is located as well as the specific station identifier. The positions shall be labeled in consecutive sequence from as-built, final room and station order.

PART 4 - TESTING AND QUALITY ASSURANCE

4.1 GENERAL

A. Contractor shall have installed similar systems in at least ten (10) other projects within the last five (5) years. Contractor shall submit evidence of compliance with this requirement prior to beginning work on the project.

4.2 TESTING

A. Individual Installers of cabling, components, and devices shall be certified through the Panduit Installer Certification Program. Contractor shall submit evidence of compliance with this requirement prior to any individual beginning work on the project.

1. The Contractor shall separately test and document the cables and terminations throughout the entire cabling system. The Contractor shall ensure that the installed cable and equipment is without flaw and that no damaged cable or equipment has been included in the installation. The Owner's Representatives shall be allowed to observe the testing of the installed cabling and terminations at any time during the testing process.
2. Acceptance of the installed Telecommunications Cabling System shall be based on the quality of Contractor performance by analysis/inspection of the testing program documentation and the conformance of the system operation with the criteria described herein. Contractor shall make available all drawings and documentation prior to acceptance testing.
3. Contractor shall provide all necessary testing equipment for performing the required acceptance test. Contractor shall verify the authenticity and display appropriate calibration data to include the expiration date of the correct calibration.
4. Contractor shall perform inspection of all products before installation and shall perform other inspections as necessary to assure that quality of performance conforms to specified requirements. Contractor shall perform timely quality assurance inspections throughout the duration of the project, including a pre-installation inspection and a final inspection. The pre-installation inspection shall be performed jointly by the Contractor and the Owner or the Owner's Representative a minimum of five (5) work days prior to beginning any work.

The pre-installation inspection will, at a minimum, verify the conformance of all equipment to the requirements set forth by the drawings and Specifications and industry standards, site readiness, availability of Bill of Materials (BOM), and adequacy of equipment furnished by the Contractor.

5. The Contractor shall perform in-progress inspections regularly to verify conformance of the installation methods to the Scope of Work (SOW) and industry standards. The Contractor shall prepare an inspection checklist to facilitate an orderly inspection process and to insure that all installed components of the cabling infrastructure are examined before, during and after installation. Contractor shall provide one copy of each completed inspection checklist within one (1) workday after each inspection. Inspections during installation as well as a final inspection encompassing the entire installed system shall be performed prior to system acceptance by the Owner or the Owner's Representative.
6. The Contractor shall correct, in a timely manner, any installation deficiencies or unacceptable equipment, based on a Contractor, the Owner or the Owner's Representative quality assurance (QA) inspection. Contractor shall then perform re-certification of any affected portion of the installation. All quality assurance inspections are subject to verification by the Owner or the Owner's Representative.
7. The Contractor shall perform inspection of the project as a whole, assuring himself that the work on the project is ready for final acceptance, before calling upon the Owner or the Owner's Representative to make a final inspection. Evidence during acceptance testing that such overall inspection has not been performed shall be grounds for rejection of installation and rescheduling of testing.
8. Testing of all installed telecommunications cabling systems shall be performed by the Contractor. Interim testing of the cabling systems during and after installation is encouraged to ensure that the following testing and acceptance criteria are met.

4.3 UTP COPPER CABLE SYSTEMS

A. All twisted pair cable shall be tested for continuity, crosses or grounds, and to ensure that pin-outs are in accordance with the drawings and these Specifications. Test results shall document each installed cable pair for pass/fail, problems encountered in the case of a failure, and the procedure required to result in a cleared pair. The results of the testing shall be furnished in printed format. All test documents shall be dated and signed by the personnel performing the testing. Hand-written test results are not acceptable.

B. Contractor shall perform final testing on the entire UTP voice copper cable system to demonstrate the acceptability of the project as installed. As a minimum, the Contractor shall perform and furnish documentation of the following tests:
   1. Continuity
   2. Shorts/Crosses
   3. Grounds
   4. Opens
   5. Reversed Pairs
   6. Split Pairs
   7. NEXT Performance

8. Length
9. Attenuation Performance

C. Cat-5 End to End Link Performance shall be in accordance with the specification set forth in ANSI/TIA/EIA-568-A as well as meeting the documents' requirements for:
1. Cabling length and topology
2. Component, performance and reliability
3. Installation practices

D. All Cat-5 wiring shall be tested to indicate a minimum of 100 Mbps transmission capability. Test results shall document each installed cable pair for measured attenuation and Near End Cross Talk (NEXT), problems encountered in the case of a value being unacceptable, and the procedure required to result in a compliant link. Cat-5 testing shall use an approved Cat-5 testing device for validation of performance. Each cable pair tested shall meet the following link performance requirements from the Hub Room termination to the outlet port as set forth in the ANSI/TIA/EIA-568B:

CATEGORY FIVE END TO END LINK PERFORMANCE		
Frequency (MHz)	Maximum Attenuation (dB)	Maximum NEXT (dB)
1	2.2	-54.5
4	4.7	-59.5
10	7.0	-44
16	8.76	-40.5
20	10.0	-38.5
100	23.5	-27

4.4 TESTING DELIVERABLES

A. Within ten (10) days of completion of testing all cabling systems, Contractor shall submit two (2) copies of the fiber, general copper, and Cat-5 test results as described in the Testing portion of the Specifications in both hard copy and electronic format. The hard copies shall be submitted in an orderly and typewritten format, bound, and separated by test type using dividers.

4.5 WARRANTY

A. In addition to guarantee of equipment by Manufacturer(s), the Contractor shall also guarantee equipment. Such guarantee shall include tests, adjustments and/or replacements of defective equipment, materials, and workmanship for a period of ten (10) years from the date of acceptance of the project as complete by the Owner or the Owner’s Representative.

END OF SECTION

SECTION 16722

GAS MONITORING SYSTEM

PART 1 - GENERAL

1.1 GENERAL OPERATION

A. The Gas Monitoring System (GMS) shall operate as stand alone system(s). The monitors shall be engineered to continuously monitor for the presence of propane gas. When gas concentration surpasses the preset limit in any sensor module in a zone, audible alarm indication and relays shall be activated for that particular zone. Sensor reaction shall be instantaneous; however alarms shall be capable of being delayed dependent on user preference, and dedicated flashing warning lights for visual indication and low mounted side wall exhaust fans for propane gas evacuation shall be immediately activated.

B. The preset limit for activation shall be 20% LEL (lower explosive limit) for propane gas.

1.2 SCOPE: Install the following in accordance with the engineering drawings:

A. Gas detection monitor panels (with built-in audible alarm), sensors, flashing warning lights and dedicated exhaust fans.

B. All associated electrical equipment and materials – conduit, wiring, switches, relays, etc.

1.3 RELATED SECTIONS

A. Section 16123 – Building Wire and Cable

B. Section 16130 – Raceways and Boxes

C. Section 16010 – Basic Electrical Requirements

1.4 REFERENCES

A. NFPA 70 – National Electrical Code

B. NFPA 58 – Liquefied Petroleum Gas Code

C. NFPA 72 – National Fire Alarm Code

1.5 SUBMITTALS

A. Product Data: Provide Manufacturers data on all equipment and components described herein.

B. Submittal shall include Manufacturer's Installation Instructions and complete system wiring and central control station schematics.

1.6 OPERATION AND MAINTENANCE DATA

A. Calibrate monitoring system per Manufacturer's recommendations.
   1. The Manufacturer's authorized technical representative shall be present during all tests and inspections. The Manufacturer's authorized representative shall provide supervision of final connections to the system panel, perform a complete functional test of the system and submit a written report to the contractor attesting to the proper operation of the completed system. This report shall be a part of the final documents submitted to the owner.

B. The Manufacturer's authorized representative shall perform an eight (8) hour training session where the representative shall instruct and train a minimum of six (6) TxDOT personnel and, if applicable, local Fire Department personnel in the operation of the system. At the training session, the Manufacturer's authorized representative shall provide a complete written operating and maintenance manual that clearly describes the system, its operation, and any maintenance requirements. It shall also have a clearly understandable maintenance schedule and a complete parts list for all components of the system(s).

1.7 DELIVERY, STORAGE, AND HANDLING

A. Deliver, store, protect and handle products to site under provisions of the Uniform General Conditions and Special Conditions.

1.8 EXTRA MATERIALS

A. Monitoring system Calibration Kit.

B. Furnish under provisions of the Uniform General Conditions and Special Conditions.

PART 2 - PRODUCTS

2.1 MANUFACTURERS

A. Gas Monitoring Equipment:
   1. Armstrong Monitoring Corporation
   2. BW Technologies
   3. Enmet Corporation
   4. Thermo Gas Tech
   5. Rel-Tek Corporation
   6. Approved equal

2.2 GAS MONITORING SYSTEM

A. Monitoring Panel:
   1. Shall be enclosed in a NEMA 12 cabinet.
   2. Dual DPDT 10 ampere relays for alarm actuation and control of ventilation equipment and/or auxiliary alarms.

3. LED's indicating power on, low and high alarms, fail, plus a user selectable audible indicator capable of being silenced for high alarm.
4. Test sequence activated by single push button.
5. Alarms shall be equipped with user selectable time delays whereby, when chosen, low and high alarm conditions must prevail for five and ten minutes respectively before activation occurs.
6. Alarms shall be equipped with dead bands which require gas levels to decline slightly below the original trip point before alarms will automatically reset.

B. Sensors:
1. Multi-drop propane gas sensor compatible with Monitor Panel.

C. Strobe (Warning) Light:
1. 120 VAC amber strobe light. See drawing schedule.

D. Alarm annunciator:
1. Annunciators in office areas shall be red in color, shall be clearly audible, well above a normal sound level, and shall be of such a size that it is inobtrusive in the environment.
2. Annunciators in exterior areas shall be red in color, and shall be clearly audible across the compound, well above a normal sound level.

PART 3 - EXECUTION

3.1 INSTALLATION

A. GMS shall be installed in accordance with Manufacturer's instructions, NFPA 58, local codes, the National Electric Code (NEC) and the engineering Drawing. See Drawing for locations.

B. Monitor – Bottom of monitor panel shall be mounted on wall 48" above floor.

C. Sensors – Shall be mounted on wall 18" above floor. All wiring shall be run in conduit with no exposed wiring.

D. Strobe Warning Light – Shall be mounted on wall 10 feet above floor. All wiring shall be run in conduit with no exposed wiring.

E. Alarm Annunciators – Shall be mounted on wall 10 feet above floor (or just below ceiling in office areas). All wiring shall be run in conduit with no exposed wiring.

F. Side wall exhaust fans shall be wired into the GMS and set to activate set upon detection of LP gas. See drawings for fan locations.

END OF SECTION

ATTACHMENT F
Prototypical Area Engineer and Maintenance Facility Construction Documents
Fort Worth District Headquarters

THIS PAGE LEFT BLANK INTENTIONALLY

INFORMATION AVAILABLE ONLY BY INTERNET OR BY DISC

http://www.dot.state.tx.us/mnt/contract/rfp.htm

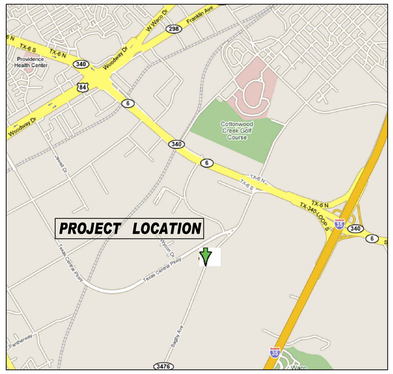

VICINITY MAP
(NOT TO SCALE)
7203 BAGBY AVENUE
McLENNAN COUNTY, TEXAS.
WACO DISTRICT

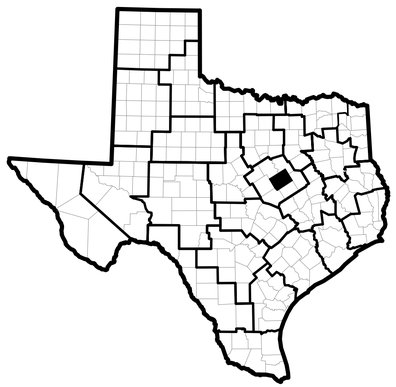

Mc LENNAN COUNTY, TEXAS

WACO AREA
ENGINEER AND MAINTENANCE FACILITY

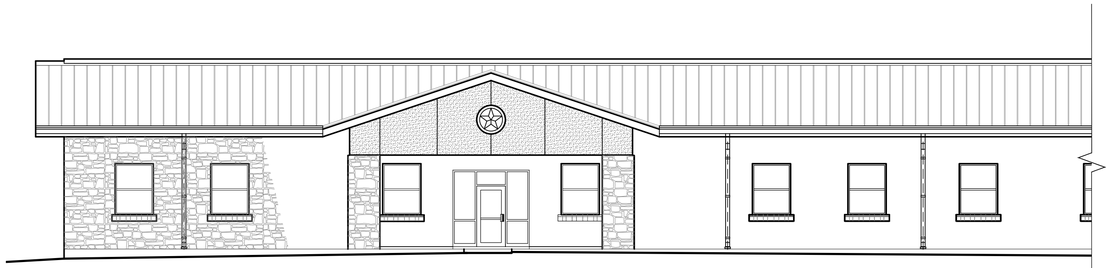

SITE NUMBER:
099071

BUILDING SUMMARY:

BUILDING 1	7,507 SQ. FT. @ OFFICE BUILDING #098020
BUILDING 2	8,683 SQ. FT. @ LABORATORY / SHOP BUILDING #098021
BUILDING 3	4,000 SQ. FT. @ VEHICLE STORAGE BUILDING #098022
BUILDING 4	1733 SQ. FT. @ WASH BAY BUILDING #098028

PARKING SUMMARY:
46 - 11' x 20' SPACES
2 - VAN ACCESSIBLE SPACES

48 - TOTAL SPACES PROVIDED

BUILDING CODES:
International Building Code - 2006
National Electric Code - 2005
Uniform Plumbing Code - 2003
Uniform Mechanical Code - 2003
State Energy Code (ASHRAE Standard 90.1-2004)

SITE SUMMARY:
TOTAL ACRES - 20 ACRES

HR SUMMARY:
TOTAL FTE - 60

SCOPE OF WORK:

THIS PROJECT INCLUDES THE CONSTRUCTION OF AN OFFICE BUILDING, LABORATORY / SHOP AND VEHICLE STORAGE BUILDING, A WASH BAY AND A FUEL STATION. SITE IMPROVEMENT WORK INCLUDES SERVICE UTILITIES, ASPHALT AND CONCRETE DRIVES, PARKING LOTS, SECURITY FENCING AND LANDSCAPING ON AN EXISTING TxDOT SITE.

Texas Department of Transportation - Maintenance Division
150 East Riverside Drive
Austin, Texas 78704
(512) 416-3048

AREA ENGINEER AND MAINTENANCE FACILITY
Austin, Texas
Karl Oberlander, PMP, RA - Project Manager - (512) 416-2463

Copyright © 2006 Texas Department of Transportation

PROJECT:
WACO AREA ENGINEER AND MAINTENANCE FACILITY

7203 BAGBY AVENUE, McLENNAN COUNTY,
TEXAS.

WACO DISTRICT - 09
PROJECT NUMBER: CBC-4704-00-672

INDEX OF DRAWINGS

COVERSHEET

GENERAL
G1.1 ABBREVIATIONS AND SYMBOLS
G1.2 TEXAS ACCESSIBILITY STANDARDS

CIVIL
C1.0 CIVIL NOTES
C2.0 HORIZONTAL CONTROL PLAN
C3.0 SITE GRADING AND DRAINAGE PLAN
C4.0 SITE PAVING PLAN
C5.0 WATER AND WASTEWATER PLAN
C6.0 WASTEWATER PROFILES
C7.0 ON SITE SEWAGE FACILITY PLAN
C8.0 OSSF DETAILS
C8.1 OSSF DETAILS
C9.0 MISC. DETAILS
C10.0 STORM WATER POLLUTION PREVENTION PLAN

ARCHITECTURAL
A1.0 SITE PLAN
A1.1 SITE SPOT ELEVATIONS PLAN
A1.2 SITE DETAILS
A1.3 GATE & FENCE DETAILS
A2.0 CODE COMPLIANCE SHEET
A2.1 FLOOR PLAN – OFFICE
A2.2 FLOOR PLAN – LAB/SHOP
A2.3 FLOOR PLAN – VEHICLE STORAGE
A2.4 FLOOR PLAN/ELEVATIONS – WASH BAY
A3.1 ROOF PLAN – OFFICE
A3.2 ROOF PLAN – LAB/SHOP
A3.3 ROOF PLAN – WASH BAY & VEHICLE STORAGE
A3.4 ROOF DETAILS
A3.5 ROOF DETAILS
A4.1 REFLECTED CEILING PLAN – OFFICE
A4.2 REFLECTED CEILING PLAN – LAB/SHOP
A5.1 EXTERIOR ELEVATIONS – OFFICE
A5.2 EXTERIOR ELEVATIONS – LAB/SHOP
A5.3 EXTERIOR ELEVATIONS – VEHICLE STORAGE
A6.1 TOILETS– PLANS & ELEVATIONS
A6.2 MILLWORK ELEVATIONS
A6.3 MILLWORK DETAILS
A7.1 BUILDING SECTIONS – OFFICE
A7.2 BUILDING SECTION – LAB/SHOP & WASH BAY
A8.1 PARTITION TYPES
A8.2 WALL SECTIONS
A8.3 WALL SECTIONS
A8.4 WALL SECTIONS
A8.5 WALL SECTIONS
A8.6 WALL SECTIONS/DETAILS – WASH BAY
A8.7 WALL SECTIONS/DETAILS – WASH BAY
A9.1 FINISH SCHEDULE & DETAILS
A9.2 DOOR SCHEDULE – DOOR & WINDOW TYPES
A9.3 DOOR DETAILS
A9.4 WINDOW AND DOOR DETAILS
A9.5 PLAN DETAILS
A9.6 DETAILS

STRUCTURAL
S1.1 STRUCTURAL NOTES/ABBREVIATIONS
S2.1 FOUNDATION PLAN – OFFICE
S2.2 FOUNDATION PLAN – LAB/SHOP
S2.3 FOUNDATION PLAN – VEHICLE STORAGE
S3.1 FOUNDATION DETAILS
S3.2 FOUNDATION DETAILS
S3.3 FOUNDATION DETAILS
S3.4 FOUNDATION DETAILS
S4.1 FRAMING PLAN – OFFICE
S4.2 FRAMING PLAN – LAB/SHOP
S4.3 FRAMING PLAN – VEHICLE STORAGE
S4.4 FRAMING SECTIONS

MECHANICAL
M2.1 MECHANICAL PLAN – OFFICE BUILDING
M2.2 MECHANICAL PLAN – LAB/SHOP BUILDING
M2.3 MECHANICAL PLAN – VEHICLE STORAGE BUILDING
M4.1 MECHANICAL SCHEDULES – 1
M4.2 MECHANICAL SCHEDULES – 2
M5.1 MECHANICAL DETAILS – 1
M5.2 MECHANICAL DETAILS – 2
M5.3 MECHANICAL DETAILS –3

PLUMBING
P2.1 PLUMBING PLAN – OFFICE BUILDING
P2.2 PLUMBING PLAN – LAB/SHOP BUILDING
P2.3 PLUMBING PLAN – WASH BAY
P3.1 PLUMBING RISER DIAGRAMS – SANITARY SEWER
P3.2 PLUMBING RISER DIAGRAMS – DOMESTIC WATER
P4.1 PLUMBING SCHEDULES
P5.1 PLUMBING DETAILS – 1
P5.2 PLUMBING DETAILS – 2
P5.3 PLUMBING DETAILS – 3

ELECTRICAL
PE1.1 PLUMBING & ELECTRICAL SITE PLAN
E2.1 LIGHTING PLAN – OFFICE BUILDING
E2.2 LIGHTING PLAN – LAB/SHOP BUILDING
E2.3 LIGHTING PLAN – VEHICLE STORAGE BUILDING
E2.4 POWER PLAN – OFFICE BUILDING
E2.5 POWER PLAN – LAB/SHOP BUILDING
E2.6 POWER PLAN – VEHICLE STORAGE BUILDING
E2.7 ELECTRICAL PLAN – WASH BAY
E2.8 GAS DETECTION PLAN – LAB/SHOP BUILDING
E2.20 FUEL STATION PLAN – SCHEDULE & ELEVATIONS
E2.21 FUEL STATION PLAN – POWER AND SPECIAL SYSTEMS
E3.1 ELECTRICAL PANEL BOARD SCHEDULES – 1
E4.2 ELECTRICAL PANEL BOARD SCHEDULES – 2
E5.1 ELECTRICAL DETAILS
E5.2 VOICE / DATA DETAILS

AREA ENGINEER AND MAINTENANCE FACILITY
PROJECT NUMBER: CBC-4704-00-672

SCHEDULE OF ABBREVIATIONS

A

A	AMPERE
AB	ANCHOR BOLT
ABV	ABOVE
A/C	AIR CONDITIONING
ACC	ACCESS
ACI	AMERICAN CONCRETE INSTITUTE
ACOUST	ACOUSTICAL
ACU	AIR CONDITIONING UNIT
ADA	AMERICANS WITH DISABILITIES ACT
ADD'L	ADDITIONAL
ADD	ADDITION OR ADDITIVE
ADH	ADHESIVE
ADJ	ADJACENT OR ADJUSTABLE
AFF	ABOVE FINISH FLOOR
AGG	AGGREGATE
AHJ	AUTHORITY HAVING JURISDICTION
AISC	AMERICAN INSTITUTE OF STEEL CONSTRUCTION
ALT	ALTERNATE
ALUM	ALUMINUM
ANC	ANCHOR
APA	AMERICAN PLYWOOD ASSOCIATION
APPROX	APPROXIMATELY
ARCH	ARCHITECT(URAL)
ASM	SMACNA ARCHITECTURAL SHEET METAL MANUAL
ASPH	ASPHALT
ASTM	AMERICAN SOCIETY FOR TESTING OF MATERIALS
ATC	ACOUSTICAL TILE CEILING
AUTO	AUTOMATIC
AUX	AUXILIARY

B

B/F	BELOW FLOOR
BD	BOARD
BEL	BELOW
BET	BETWEEN
BLDG	BUILDING
BLK	BLOCK
BLKG	BLOCKING
BM	BENCH MARK OR BEAM
BOT	BOTTOM
BRG	BEARING
BRZ	BRONZE
BUR	BUILT-UP ROOF(ING)

C

C	CHANNEL OR CONDUIT
CAB	CABINET
CB	CATCH BASIN
C/C	CENTER TO CENTER
CCT	CIRCUIT
CER	CERAMIC
CFM	CUBIC FEET PER MINUTE
CG	CORNER GUARD
CHT	CEILING HEIGHT
CI	CAST IRON
CIP	CAST IRON PIPE OR CAST IN PLACE
CISP	CAST IRON SOIL PIPE
CJ	CONTROL JOINT
CL	CENTERLINE
CLG	CEILING
CLO	CLOSET
CLR	CLEAR
CMU	CONCRETE MASONRY UNIT
CO	CLEANOUT
COMP	COMPOSITION
COMPR	COMPRESSIBLE
CONC	CONCRETE
CONF	CONFER OR CONFERENCE
CONN	CONNECTION
CONST	CONSTRUCTION
CONT	CONTINUOUS
CONTR	CONTRACTOR
CPT	CARPET(ED)
CR	COLD ROLLED
CRC	COLD ROLLED CHANNEL
CSK	COUNTERSINK (SUNK)
CSMT	CASEMENT
CT	CERAMIC TILE
CTR	CENTER
CW	COLD WATER

D

D	DEPTH OR DRAIN
DBL	DOUBLE
DC	DIRECT CURRENT
DCO	DOUBLE CLEANOUT
DEMO	DEMOLITION
DET	DETAIL
DF	DRINKING FOUNTAIN
DHW	DOMESTIC HOT WATER
DI	DUCTILE IRON
DIA	DIAMETER
DIAG	DIAGONAL
DN	DOWN
DR	DOOR OR DRIVE
DS	DOWNSPOUT
DTL	DETAIL
DWC	DRYWALL CHANNEL
DWG	DRAWING
DWL	DOWEL

E

E	EAST
EA	EACH
ECJ	EDGE CONTROL JOINT
EEW	EMERGENCY EYE WASH
EF	EACH FACE
EIFS	EXTERIOR INSULATION AND FINISH SYSTEM
EJ	EXPANSION JOINT
EL	ELEVATOR
ELEC	ELECTRIC(AL)
ELEV	ELEVATION
EMER	EMERGENCY
EMH	ELECTRICAL MANHOLE
EQ	EQUAL
EQUIP	EQUIPMENT
ESE	EMERGENCY EYE SHOWER
EW	EACH WAY
EW-EF	EACH WAY – EACH FACE
EWC	ELECTRIC WATER COOLER
EWH	ELECTRIC WATER HEATER
EXH	EXHAUST
EXIST	EXISTING
EXP	EXPOSED
EXP JT	EXPANSION JOINT
EXT	EXTERIOR
EXTEN	EXTENSION

F

F	FIRE PIPE
FA	FIRE ALARM
FCO	FLOOR CLEANOUT
FD	FLOOR DRAIN
FDC	FIRE DEPT. CONNECTION
FDN	FOUNDATION
FE	FIRE EXTINGUISHER
FEC	FIRE EXTINGUISHER CABINET
FF	FINISH FLOOR
FFE	FINISH FLOOR EXISTING
FH	FIRE HYDRANT
FHC	FIRE HOSE CABINET
FIN	FINISH
FIX	FIXTURE
FL	FLOW LINE
FLR	FLOOR
FPRF	FIREPROOFING
FR	FIRE RATED
FRMG	FRAMING
FRP	FIBERGLASS REINFORCED PLASTIC
FS	FLOOR SINK
FT	FEET
FTG	FOOTING
FVC	FIRE VALVE CABINET

G

G	GRILLE OR GAS
GA	GAUGE (GAGE)
GALV	GALVANIZED
GB	GRAB BAR OR GRADE BEAM
GCO	GRADE CLEANOUT
GI	GALVANIZED IRON OR GRATE INLET
GL	GLASS
GND	GROUND
GR	GRADE
GSU	GLAZED STRUCTURAL UNIT
GWB	GYPSUM WALLBOARD
GYP	GYPSUM

H

HB	HOSE BIBB
HC	HANDICAP
HDWE	HARDWARE
HDWD	HARDWOOD
HM	HOLLOW METAL
HND	HAND
HP	HORSE POWER
HORIZ	HORIZONTAL
HR	HOUR
HS	HIGH STRENGTH OR HEADED STUDS
HT	HEIGHT
HTR	HEATER
HVAC	HEATING/VENTILATING/ AIR CONDITIONING
HW	HOT WATER
HWTM	HOT WATER TEMPER- ATURE MAINTENANCE

I

ID	INSIDE DIAMETER
IF	INSIDE FACE
IN	INCH
INFO	INFORMATION
INSUL	INSULATION
INT	INTERIOR
INTER	INTERMEDIATE

J

J	JUNCTION
JAN	JANITOR
JB	JUNCTION BOX
JST	JOIST
JT	JOINT

K

KCJ	KEYED CONSTRUCTION JOINT
KIT	KITCHEN
KV	KILOVOLT
KVA	KILOVOLT-AMPERE
KW	KILOWATT
KWH	KILOWATT-HOUR

L

L	LENGTH
LAM	LAMINATE
LAV	LAVATORY
LF	LINEAR FEET
LH	LEFT HAND
LL	LIVE LOAD
LLH	LONG LEG HORIZONTAL
LLV	LONG LEG VERTICAL
LOC	LOCATE OR LOCATION
LONG	LONGITUDINAL
LP	LOW POINT
LT	LIGHT(S)
LTG	LIGHTING
LT WT	LIGHT WEIGHT
LVL	LEVEL

M

M	MOTOR
MAINT	MAINTENANCE
MANUF	MANUFACTURER
MAS	MASONRY
MAT'L	MATERIAL
MAX	MAXIMUM
M.B.M.	METAL BUILDING MANUFACTURER
MBR	MEMBER
MDP	MAIN DISTRIBUTION PANEL
MECH	MECHANICAL
MEP	MECHANICAL/ELECTRICAL/ PLUMBING
MFR	MANUFACTURER
MG	MIRROR GLASS
MH	MANHOLE
MIN	MINIMUM
MJA	SEALANT JOINT SHAPE DETAIL
MO	MASONRY OPENING
MPH	MILES PER HOUR
MTG	MOUNTING OR MOUNTED
MTL	METAL

N

N	NORTH
NFWH	NON-FREEZE WALL HYDRANT
NFYH	NON-FREEZE YARD HYDRANT
NIC	NOT IN CONTRACT
NO	NUMBER
NOM	NOMINAL
NTS	NOT TO SCALE

O

OA	OUTSIDE AIR
OC	ON CENTER
OCEW	ON CENTER –EACH WAY
OD	OUTSIDE DIAMETER
OF	OUTSIDE FACE
OFD	OVERFLOW DRAIN
OH	OVERHEAD
OPNG	OPENING
OPP	OPPOSITE
OSL	OUTSIDE LEG
OZ	OUNCES

P

PART	PARTITION
PL	PROPERTY LINE OR PLATE
PLAM	PLASTIC LAMINATE
PLAS	PLASTER
PLF	POUNDS PER LINEAR FOOT
PLYWD	PLYWOOD
PNL	PANEL
PR	PAIR
PROV	PROVIDE
PSF	POUNDS PER SQUARE FOOT
PSI	POUNDS PER SQUARE INCH
PSIG	POUNDS PER SQUARE INCH GAGE
PT	POINT
PTD	PAPER TOWEL DISPENSER OR PAINTED
PVC	POLYVINYL CHLORIDE
PVMT	PAVEMENT

Q

QT	QUARRY TILE
QTY	QUANTITY

R

R	RISER OR REGISTER
RA	RETURN AIR
RAD	RADIUS OR RETURN AIR DUCT
RCP	REFLECTED CEILING PLAN
RD	ROOF DRAIN
RE	REFER TO
REF	REFERENCE
REFL	REFLECTED
REINF	REINFORCING (REINFORCED)
REM	REMARK OR REMOVE
REQ'D	REQUIRED
RET	RETAINING
REV	REVERSE OR REVISED
RH	RIGHT HAND
RM	ROOM
RO	ROUGH OPENING
RPM	REVOLUTIONS PER MINUTE
RPZ	REDUCED PRESSURE PRINCIPAL BACKFLOW PREVENTER
RTU	ROOF TOP UNIT

S

S	SOUTH
SA	SUPPLY AIR
SAN	SANITARY
SAT	SUSPENDED ACOUSTICAL TILE
SC	SCALE
SCH	SCHEDULE
SCW	SOLID CORE WOOD
SD	SMOKE DAMPER OR STORM DRAIN
SECT	SECTION
SF	SUPPLY FAN OR SQUARE FEET
SGFT	STRUCTURAL GLAZED FACING TILE
SH	SPRINKLER HEAD
SHT	SHEET
SIM	SIMILAR
SJ	SAWED JOINT
SM	SPRINKLER MAIN
SMACNA	SHEET METAL AND AIR CONDITIONING CONTRACTORS NATIONAL ASSOCIATION
SPC	SPACE
SPEC	SPECIFICATION
SPEC'D	SPECIFIED
SQ	SQUARE
SS	SERVICE SINK OR SANITARY SEWER
SSM	SOLID SURFACE MATERIAL

S

SHT	SHEET
SIM	SIMILAR
SJ	SAWED JOINT
SM	SPRINKLER MAIN
SMACNA	SHEET METAL AND AIR CONDITIONING CONTRACTORS NATIONAL ASSOCIATION
SPC	SPACE
SPEC	SPECIFICATION
SPEC'D	SPECIFIED
SQ	SQUARE
SSMH	SANITARY SEWER MANHOLE
SSTL	STAINLESS STEEL
STA	STATION
STD	STANDARD
STIFF	STIFFENER
STIR	STIRRUP
STL	STEEL
STOR	STORAGE
STR	STRUCTURAL
SUPT	SUPPORT
SUSP	SUSPENDED
SV	SHEET VINYL
SVC	SERVICE
SW	SWITCH
SYM	SYMMETRICAL

T

T	THICKNESS OR TREAD
TAS	TEXAS ACCESSIBILITY STANDARDS
T&B	TOP AND BOTTOM
TC	TOP OF CURB
TEL	TELEPHONE
TEMP	TEMPERATURE OR TEMPORARY
TH	THRESHOLD
THRU	THROUGH
THR'D	THREADED
TLT	TOILET
TOC	TOP OF CONCRETE
TOS	TOP OF STEEL
TOT	TOTAL
TOW	TOP OF WALL
TP	TOILET PARTITION
TRANS	TRANSVERSE OR TRANSITION
TS	TUBE STEEL
T-STAT	THERMOSTAT
TTD	TOILET TISSUE DISPENSER
TYP	TYPICAL

U

U/G	UNDERGROUND
UL	UNDERWRITERS LABORATORY INC.
UNO	UNLESS OTHERWISE NOTED
UR	URINAL

V

V	VENT OR VOLT
VAC	VACUUM
VB	VINYL BASE
VCT	VINYL COMPOSITION TILE
VERT	VERTICAL
VEST	VESTIBULE
VF	VENTILATION FAN
VIF	VERIFY IN FIELD
VOL	VOLUME
VTR	VENT THROUGH ROOF
VWC	VINYL WALL COVERING
VWF	VINYL WALL FABRIC

W

W	WIDTH, WASTE OR WEST
W/	WITH
W/O	WITHOUT
WC	WATER CLOSET
WD	WOOD
WDW	WINDOW
WH	WATER HEATER OR WALL HYDRANT
WP	WEATHERPROOF OR WORKING POINT
WPFG	WATERPROOFING
WPL	WATERPROOF LOUVER
WS	WATER STOP
WSCT	WAINSCOT
WT	WEIGHT
WV	WATER VALVE
WWF	WELDED WIRE FABRIC
WWM	WELDED WIRE MESH

GENERAL SYMBOLS

- 24.0 NEW CONTOUR
- 20.1 EXIST. SPOT ELEV.
- 24.0 EXIST. CONTOUR
- LEVEL LINE
- D5 DEMOLITION NOTE SYMBOL
- C8 NEW CONSTRUCTION SYMBOL
- A8.4 PARTITION TYPE KEY
- A8.4 PARTITION TYPE KEY
- TA9 TOILET ACCESSORIES KEY NOTE
- X COLUMN GRID LOCATION
- RECEPTION 101 ROOM NAME / NUMBER
- WHEELCHAIR TURNING RADIUS
- 1/A1.1 PLAN / DETAIL ENLARGED
- 1 A1.0 WALL SECTION
- 2 A2.0 BUILDING SECTION
- 1/A1.1 SECTION DETAIL
- 1/A1.1 INTERIOR ELEV. KEY
- 115 DOOR TYPE
- B WINDOW TYPE
- 1 DRAWING TITLE / SCALE
- 1 A1.0 EXTERIOR ELEVATION
- NORTH NORTH ARROWS
- FE FIRE EXTINGUISHER
- X LOUVER TYPE

ARCHITECTURAL SYMBOLS

SECTION

- CONCRETE
- PRECAST CONCRETE
- CMU
- BRICK
- CAST/CUT STONE
- NATURAL STONE
- STEEL
- ALUMINUM
- BRASS/BRONZE
- FINISHED WOOD
- METAL LATH & PLASTER
- CERAMIC/QUARRY TILE
- GLASS/MIRROR
- GRADE/EARTH
- CARPET
- GRAVEL
- SAND
- CONTINOUS WOOD BLOCKING
- DISCONTINUOUS WOOD SHIM
- PLYWOOD
- SPRAYED FIREPROOFING
- BATT/BLANKET INSULATION
- RIGID INSULATION
- ROOF DECK INSULATION
- GYPSUM SHEATHING
- GYPSUM WALLBOARD
- BACKER ROD & SEALANT
- JOINT FILLER
- ACOUSTICAL CEILING
- PLASTIC LAMINATE
- EXTERIOR INSULATED FINISH SYSTEM (E.I.F.S.)

ELEVATION

- CONCRETE
- BRICK
- BRICK
- BRICK
- GLASS
- CONCRETE
- BRICK
- BRICK
- WOOD
- SAND
- SAND

Texas Department of Transportation
125 E. 11th Street
Austin, Texas 78701-2483
(512) 416-3045
Copyright © 2005 Texas Department of Transportation

THIS DOCUMENT IS RELEASED FOR THE PURPOSE OF INFORMATION ONLY
NOT FOR REGULATORY APPROVAL, PERMITTING, OR CONSTRUCTION.

WACO AREA ENGINEER AND MAINTENANCE FACILITY
WACO, MCLENNAN COUNTY WACO DISTRICT

Revisions

Drawn by: –

Project No. CBC4704-00672

Date 05.21.2007

Sheet No. G1.1 of 2 sheets

ABBREVIATIONS / SYMBOLS

NOTE: THIS DRAWING WAS CREATED FOR PRODUCTION ON 22" x 34" SHEET SIZE. DO NOT SCALE PRINTS.

CADFILE: T:\MNTFMD02FTW\CBC4704-00-637\02-77-47040063 7\Acad\prototypical pdfs\waco\Acad\Arch\0672_G1_1.dwg Plotted: Fri, Aug. 07, 2009 @ 1:09 PM By: MBAZAN

MOUNTING HEIGHTS

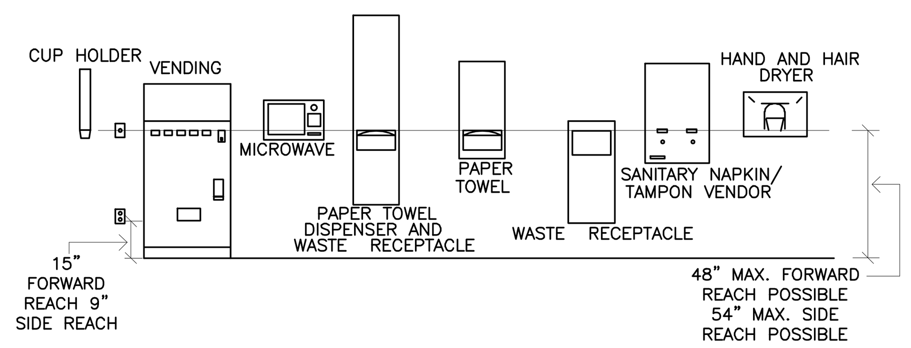

DOOR SIGNAGE MOUNTING HEIGHTS AND LOCATION

CHARACTER PROPORTIONS

LETTERS AND NUMBERS OF SIGNS SHALL HAVE A WIDTH–TO–HEIGHT RATIO OF BETWEEN 3:5 AND 1:1, AND STROKE/WIDTH–TO– HEIGHT RATIO BETWEEN 1:5 AND 1:10

CHARACTER HEIGHT

CHARACTERS AND NUMBERS ON SIGNS SHALL BE SIZED ACCORDING TO THE VIEWING DISTANCE FROM WHICH THEY ARE TO BE READ. THE MINIMUM HEIGHT IS MEASURED USING AN UPPER CASE "X". LOWER CASE CHARACTERS ARE PERMITTED. OVERHEAD SIGNS SHALL HAVE MINIMUM CLEARANCE OF 80" UNDER LOWEST POINT OF THE SIGN. MINIMUM CHARACTER **HEIGHT SHALL BE 3".**

RAISED AND BRAILLE CHARACTER

LETTERS AND NUMERALS SHALL BE RAISED 1/32" MINIMUM UPPER CASE "SANSERIF" OR "SIMPLE SERIF" TYPE AND SHALL BE ACCOMPANIED WITH GRADE 2 BRAILLE. RAISED CHARACTERS SHALL BE AT LEAST 5/8" HIGH, BUT NO HIGHER THAN 2". PICTOGRAMS SHALL BE ACCOMPANIED BY THE EQUIVALENT VERBAL DESCRIPTION PLACED DIRECTLY BELOW PICTOGRAMS. THE BORDER DIMENSION OF PICTOGRAM SHALL BE 6" MIN. IN HEIGHT.

FINISH AND CONTRAST

THE CHARACTERS AND BACKGROUND OF THE SIGNS SHALL BE EGGSHELL, MATTE, OR NON–GLARE FINISH. CHARACTERS AND SYMBOLS SHALL CONTRAST WITH THEIR BACKGROUND.(LIGHT CHARACTERS ON DARK BACKGROUND OR VICE–VERSA)

MOUNTING LOCATIONS AND HEIGHT

SIGNS SHALL BE INSTALLED ON THE WALL ADJACENT TO THE LATCH SIDE OF THE DOOR. IF NO SPACE IS LEFT TO THE LATCH SIDE OF THE DOOR, SUCH AS DOUBLE–LEAF DOORS, SIGN SHALL BE PLACED ON THE NEAREST ADJACENT WALL. MOUNTING HEIGHT SHALL BE 60" ABOVE FINISH FLOOR TO THE CENTERLINE OF THE SIGN. MOUNTING LOCATION SHALL BE SUCH THAT A PERSON MAY APPROACH WITHIN 3" OF SIGNAGE WITHOUT ENCOUNTERING PROTRUDING OBJECT OR STANDING WITHIN THE SWING OF A DOOR.

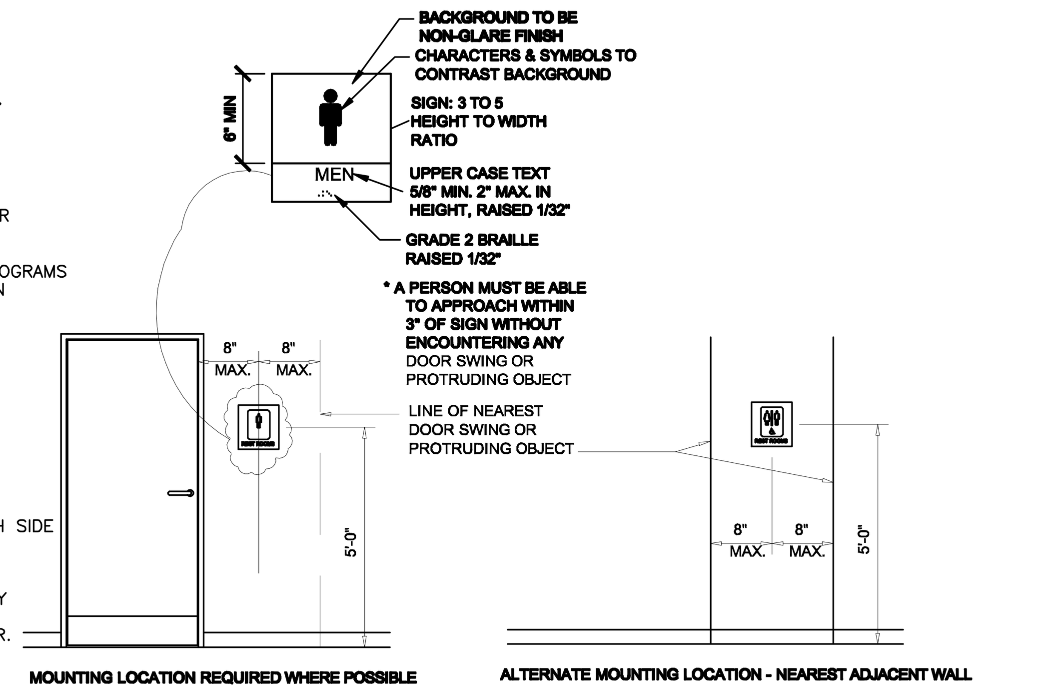

ACCESSIBLE ROUTE

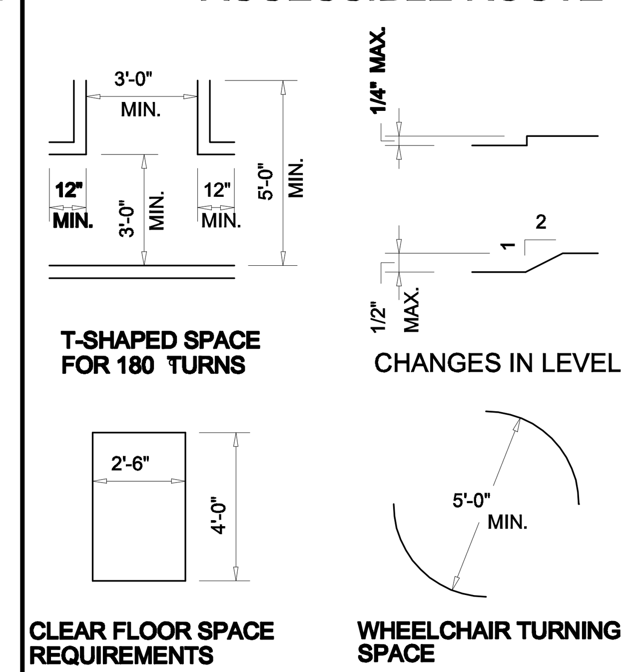

DRINKING FOUNTAINS

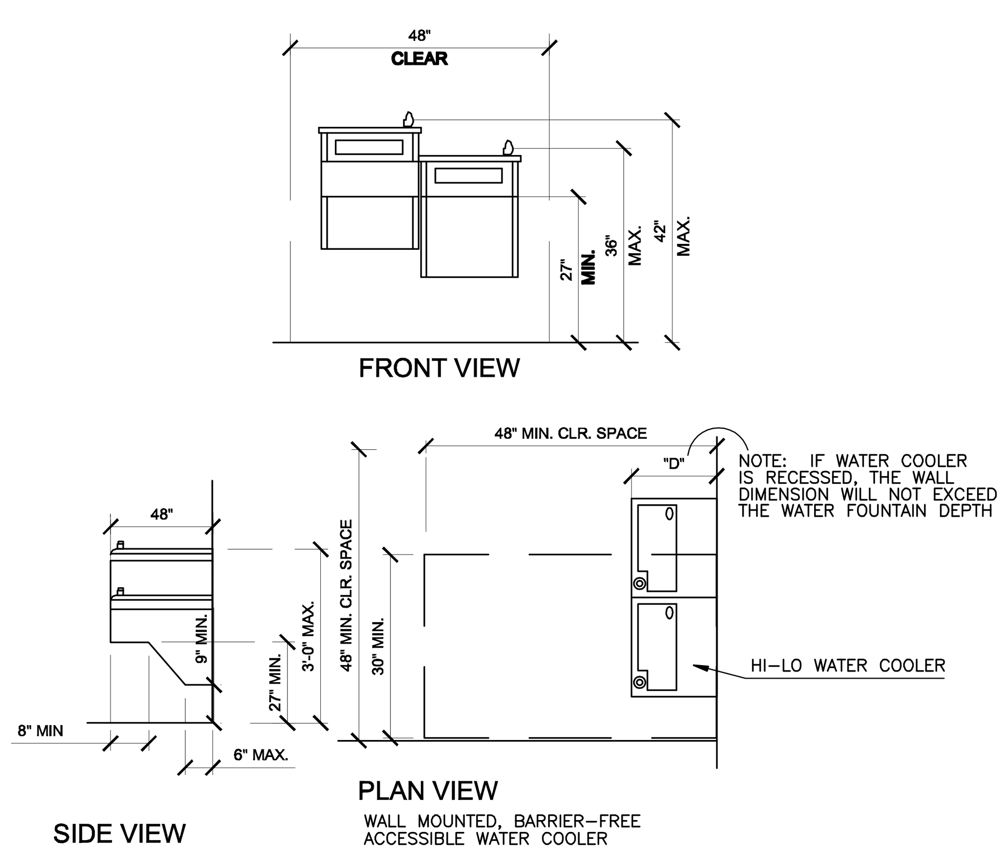

NOTES: 1. SPOUT SHALL BE WITHIN 3" FROM FRONT OF UNIT, FLOW OF WATER SHALL BE MIN. 4" HIGH AND PARALLEL TO FRONT OF UNIT.
2. CONTROLS SHALL BE FRONT–MOUNTED OR SIDE–MOUNTED NEAR THE FRONT. CONTROLS SHALL BE ABLE TO BE OPERATED WITH ONE HAND AND WITH MAX. FORCE OF 5 LBS.

REACHES AND PROTRUDING OBJECTS

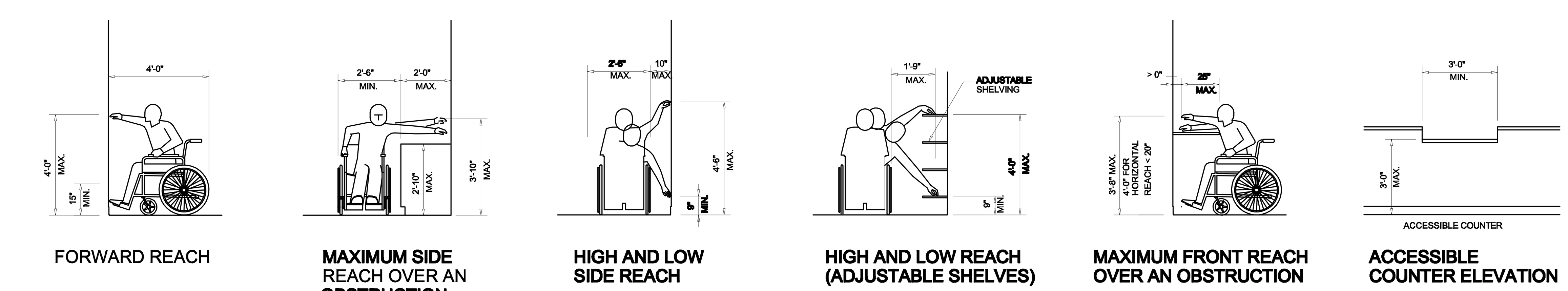

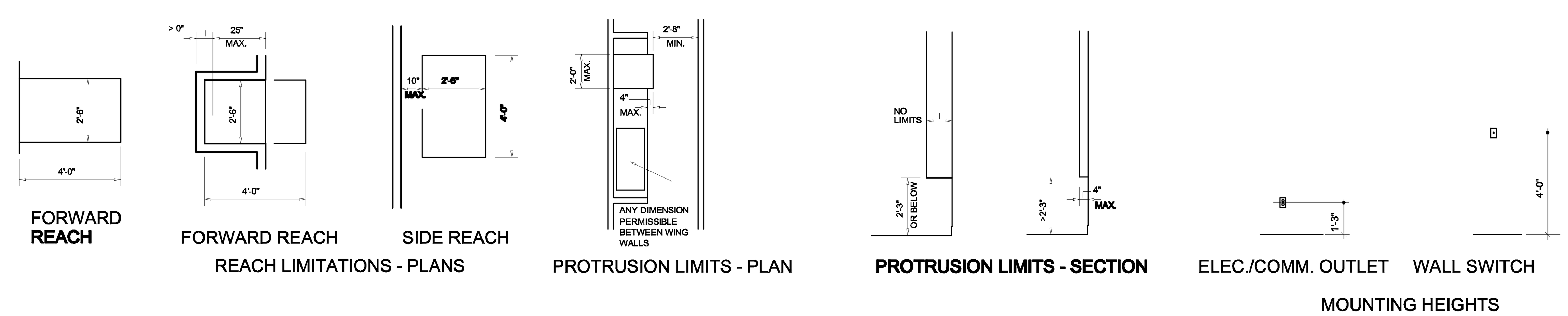

DOORS

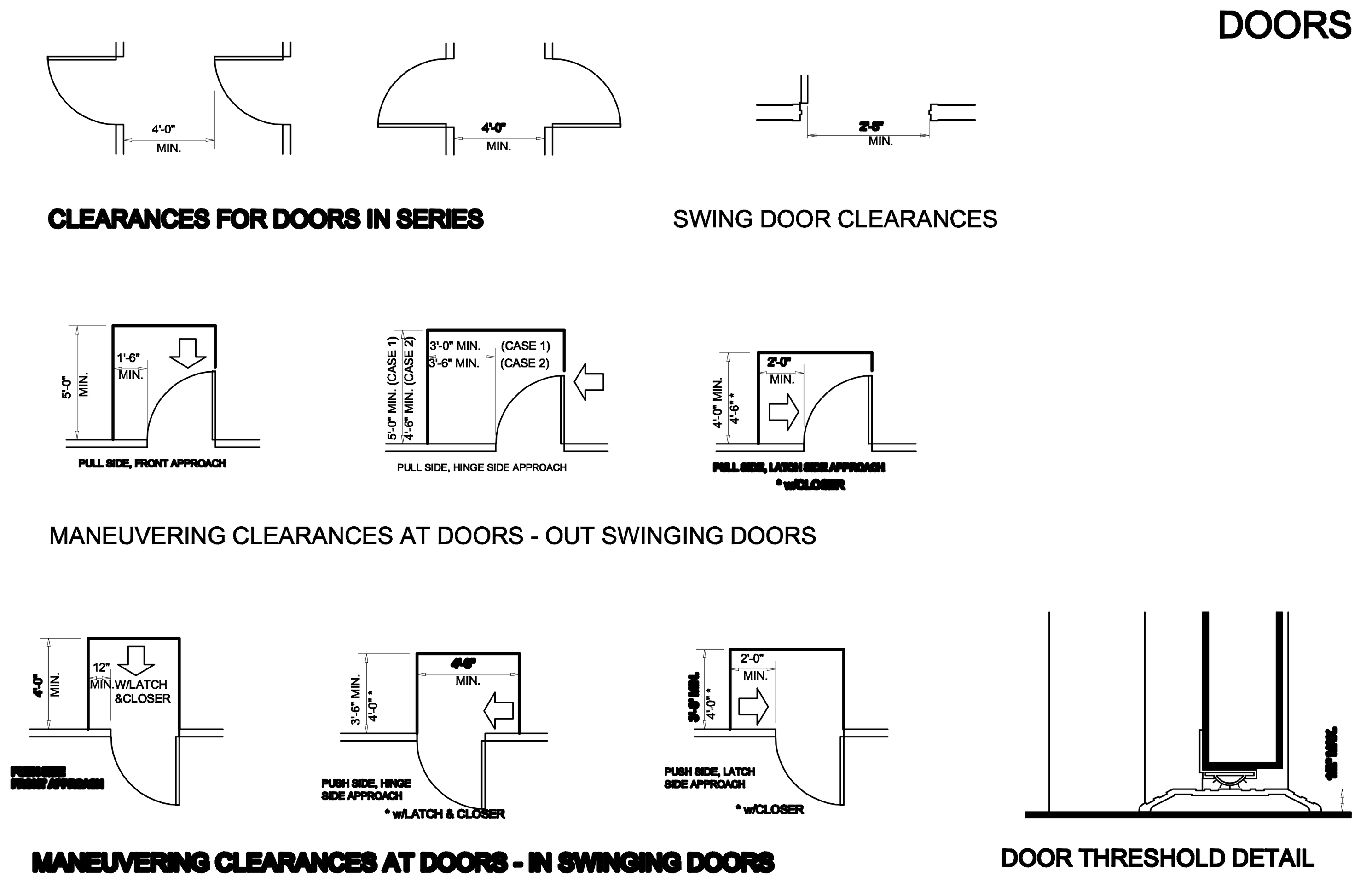

TOILET ROOMS

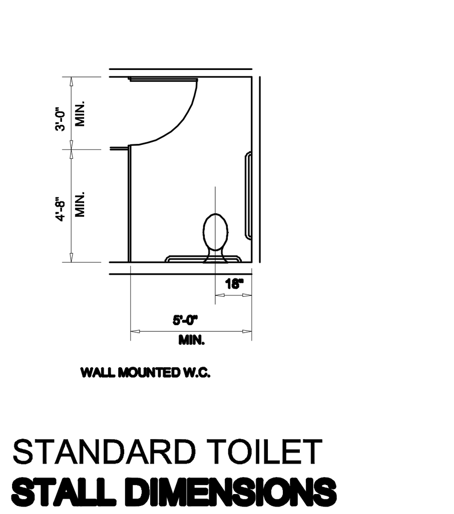

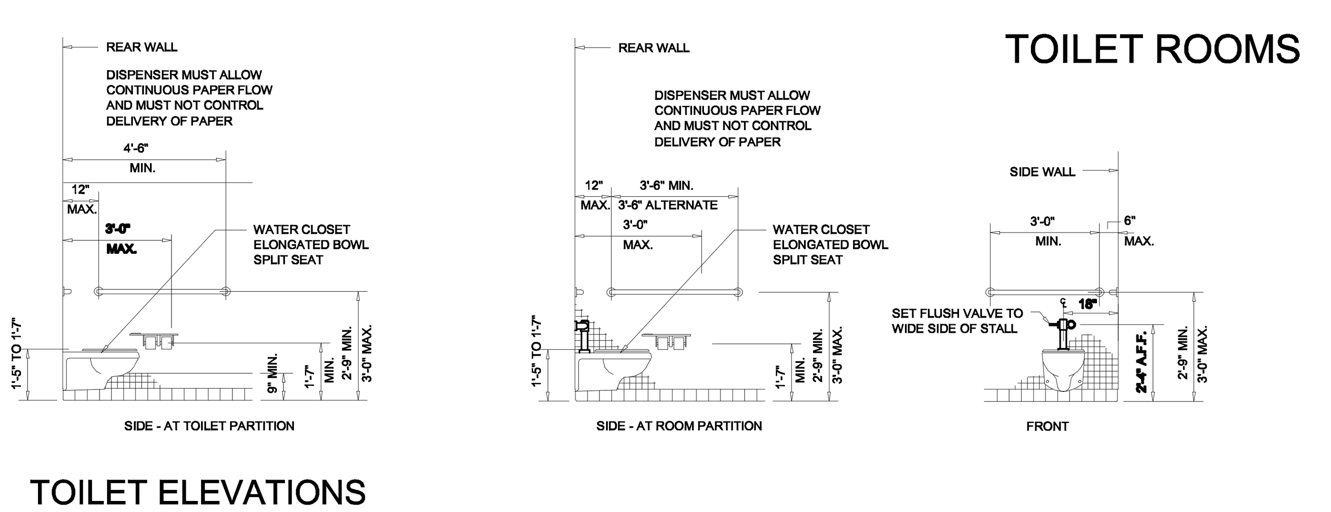

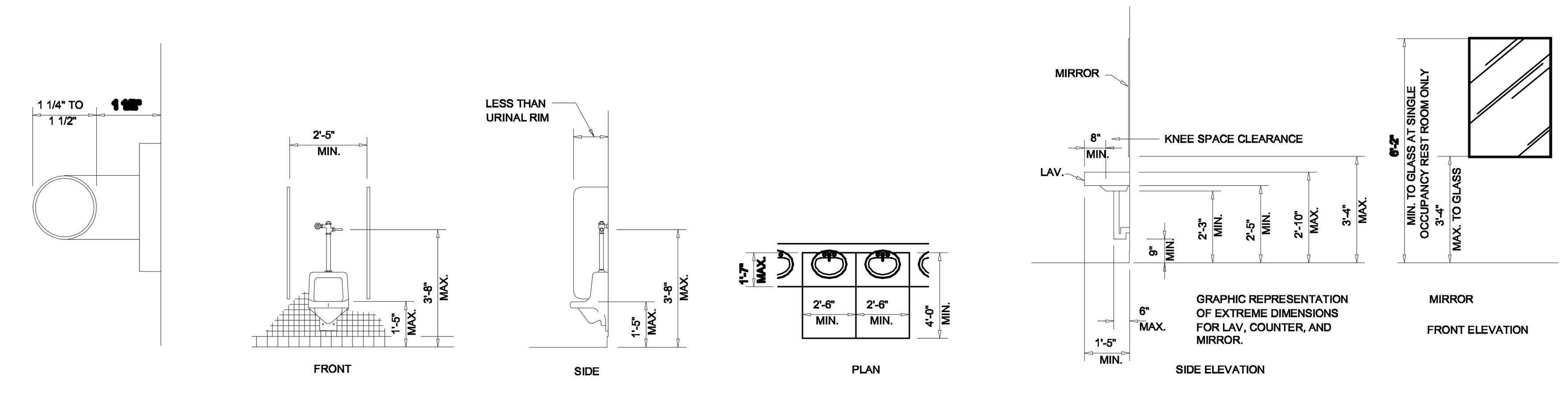

GENERAL NOTES

THIS SHEET IS FOR INFORMATION AND GUIDELINES ONLY
REFER TO ADA AND TAS FOR COMPLETE CRITERIA

1. INFORMATION SHOWN ON THIS SHEET IS THE MINIMUM REQUIRED FOR ADA COMPLIANCE.
2. ALL CONDITIONS SHOWN ON THIS SHEET MAY NOT BE REQUIRED BY THIS PROJECT. COMPARE THE REQUIREMENTS OF THE ARCHITECTURAL DRAWINGS WITH THIS SHEET FOR RELEVANT INFORMATION.
3. NOTIFY THE ARCHITECT IMMEDIATELY OF ANY DISCREPANCIES BETWEEN THE ARCHITECTURAL DRAWINGS AND INFORMATION GIVEN ON THIS SHEET FOR CLARIFICATION.

General Notes:

1. Minimum clear width of accessible route: 36".
2. Running slope shall not exceed 1:20. (Cross slope shall not exceed 1:50).
3. 1/4" to 1/2" changes in level require edge to be beveled with a slope no greater than 1:2.
4. The highest operable part of controls, dispensers, receptacles and other operable equipment shall be placed no higher than 4' and no lower than 1' 3" above the finish floor. These requirements shall apply to controls and operating mechanisms which are expected to be operable by occupants, visitors, or other users of a building or facility and may include but are not limited to, thermostats, light switches, alarm activated devices, ventilators or electrical outlets.
5. Provide solid blocking at all wall mounted accessories.

Ramps:

1. Maximum slope: 1:12.
2. Transitions shall be flush and free of abrupt changes.
3. Maximum slope of adjacent surfaces: 1:20.
4. Maximum clear width: 36".
5. Handrails required if rise exceeds 6" or run exceeds 72".
6. Handrails shall be provided in both sides or the ramp.
7. Inside rail on switch back or dogleg ramps shall be continuous.
8. Where no continuous, rails shall extend at least 12" beyond top and bottom of ramp parallel to the ground surface
9. Height or handrails: 35" (34–36).
10. Clear floor space between rails and any wall shall be 1–1/2".
11. Gripping surfaces shall be uninterrupted by newel posts, other construction elements, or obstructions.
12. Ends shall be rounded, or returned smoothly to floor, wall or post.
13. Handrails shall not rotate in their fittings.
14. Diameter or width of gripping surfaces shall be 1–1/4" to 1–1/2", or shall provide an equivalent gripping surface.
15. All required curb ramps shall have a groove surface w/grooves running perpendicular to route of travel.
16. All required curb ramps will be painted yellow for contrast.
17. Sides of required curb ramps will have a maximum of 1:10 slope.

Stairs:

1. All steps on all flights of stairs shall have uniform riser heights and tread widths. minimum tread depth shall be 11" unless otherwise noted, measured from riser to riser.
2. Underside of nosing shall not be abrupt.
   Radius of curvature at leading tread edge shall not exceed 1/2".
   Risers shall be sloped or underside of nosing shall have an angle not less than 60 degrees.
   Nosing shall project no more than 1–1/2".
3. Handrails are required at both sides of all stairs.
4. Inside rail on switch back or dogleg stairs shall be continuous.
5. Where no continuous, handrail extensions shall be provided as follows:
   Top of stairs flights: Parallel to floor, 12" minimum beyond top riser nosing.
   Bottom of stair flights: continue sloping for one tread width beyond bottom rise, plus 12" minimum parallel to floor.
6. Handrail height: 35" measured from stair nosing.
7. Clear floor space between rail and any wall shall be 1–1/2".
8. Gripping surfaces shall be uninterrupted by newel posts, other construction elements or obstructions.
9. Ends shall be rounded, or returned smoothly to floor, wall or post.
10. Handrails shall not rotate in their fittings.
11. Diameter or width of gripping surface shall be 1–1/4" to 1–1/2", or shall provide an equivalent gripping surface.

Doors:

Re: Clearance diagrams – this sheet

1. Doorways shall provide a clear opening of 32" min., with the door open 90 degrees.
2. Openings more than 24" in depth shall provide a clear opening of 36" minimum.
3. Max. Threshold height: 1/2".
4. Door hardware:
   Handless, pulls, latches, locks and other operating devices shall have a shape that is easy to grasp with one hand and does not require tight grasping, tight pinching or twisting of the wrist to operate.
5. Lever–operated mechanisms, push–type mechanisms, and U–shaped handles are acceptable designs.
6. Hardware required fro passage shall be mounted no higher than 47–1/2" above finished floor.
7. Door Closer: If a door has a closer, then the sweep period of the closer shall be adjusted so that from an open position of 70 degrees, the door will take at least 3 seconds to move to a point 3" from the latch, measured to the leading edge of the floor.
8. Door opening Force: The maximum force for pinching or pulling open a door shall be as follows:
   a. Exterior hinged doors: 8 lb.
   b. Interior hinged doors: 5 lb.
   c. Sliding or folding doors: 5 lb.
9. Automatic Doors and Power–assisted Doors: If an automatic door is used, then it shall comply with ANSI/BHMAA156.10–1985.
   Slowly opening, low powered, automatic doors shall comply with ANSIA156.19–1884.
   Such doors shall not open to back check faster than 3 seconds and shall required no more than 15 lb. to stop door movement.
   If a power–assisted door is used, its door opening force shall comply with forces listed above and its closing force shall comply with ANSIA156.19–1984.

Water Closets:

1. Water closets shall be located 18" to the center line from a side wall or partition.
2. The height to the top of the toilet seat shall be 17" to 19".
3. For water closets not located in toilet stalls, the following grab bars shall be provided, 34" above the finish floor.
   Side Wall: 42" long min., 12" from back wall.
   Back Wall: 36" long min., 12" min. each of water closet center line.
4. Flush controls shall be 28" above the finish floor.
   Controls for flush valves shall be mounted on the west side of toilet areas.
5. Toilet paper dispensers shall be installed on the side wall, below the grab bar, a minimum 19" above the floor, and a maximum 36" from the rear wall.
6. Toilet stalls will have a minimum depth of 7"–11".
7. Toilet stall doors will have no twist type hardware.

Urinals:

1. Urinals shall be wall hang with an elongated rim 17" maximum above the finish floor.
2. Flush controls shall be 44" maximum above the finished floor.

Lavatories and Mirrors:

1. Lavatories shall extend 17" minimum from the wall.
2. Clearance of 29" minimum shall be provided from finish floor to bottom of apron.
3. Knee clearance of 27" minimum shall extend 8" minimum under the edge of the lavatory.
4. Toe clearance of 9" minimum shall be provided for the full depth of the lavatory.
5. Hot water and drain pipes under lavatories shall be insulated or otherwise configured to protect against contact.
6. Mirrors shall be mounted with the bottom edge of the reflecting surface 40" maximum above the finish floor and the top edge 74" max. above finished floor.
7. If medicine cabinets are provided, at least one shall be located with a usable shelf no higher than 43–1/2" above the floor.

Sinks:

1. Knee clearance of 27" high minimum, 30" wide minimum and 19" deep minimum shall be provided underneath sinks.
2. Hot water and drain pipes under lavatories shall be insulated or otherwise configured to protect against contact.

Grab Bars:

1. Diameter or width of gripping surface shall be 1–1/4" to 1–1/2", or the shape shall provide an equivalent gripping surface.
2. The space between grab bars and adjacent walls shall be 1–1/2".
3. Grab bars shall not rotate within their fittings.
4. Grab bars and adjacent wall surfaces shall be free of sharp or abrasive surfaces.
5. Edges shall have a radius of 1/8" minimum.

Alarms:

1. Visual alarm signal appliances shall be placed 80 inches above the highest floor level within the space or 6" below the ceiling, whichever is lower.
2. Alarm system will meet ADA requirements including flashing lights at 100' max. spacing in corridors and eventually leased areas during tenant finish.

Signage:

1. Signs which designate permanent rooms and spaces shall comply with the requirements listed above for: Mounting Location and Height
   Where permanent identification is provided for rooms and spaces, signs shall be installed on the wall adjacent to the latch side of the door.
   Where there is no wall space to the latch side of the door, including at double–leaf doors, signs shall be placed on the nearest adjacent wall.
   Mounting height shall be 60" above the finish floor to the centerline of the sign
2. Exterior traffic crossing from ADA spaces to Building entrances shall receive yellow surface markings 8'–0" wide (min.) and ADA crossing warning signs for auto traffic.

TEXAS ACCESSIBILITY STANDARDS

NOTE: THIS DRAWING WAS CREATED FOR PRODUCTION ON 22" x 34" SHEET SIZE. DO NOT SCALE PRINTS.

Texas Department of Transportation
125 E. 11th Street
Austin, Texas 78701-2483
(512) 416-3649

Copyright © 2005 Texas Department of Transportation

THIS DOCUMENT IS RELEASED FOR THE PURPOSE OF INFORMATION ONLY
NOT FOR REGULATORY APPROVAL, PERMITTING, OR CONSTRUCTION.

WACO AREA ENGINEER AND MAINTENANCE FACILITY

WACO, MCLENNAN COUNTY WACO DISTRICT

Revisions

Drawn by: -

Project No. CBC4704-00672

Date 05.21.2007

Sheet No. G1.2 of 2 sheets

Plotted: Fri, Aug. 07, 2009 @ 1:10 PM By: MBAZAN

CIVIL GENERAL NOTES

1. The project includes grading, water line and appurtenances, gravity wastewater line and appurtenances, concrete pavement, sidewalks, curbs, asphalt pavement and an On-Site Sewage Facility. Specific items may have been identified as Future Work by TxDOT. These items are shown on the drawings for information purposes only.
2. The Texas Department of Transportation Standard Specifications, 2004 shall govern materials and methods used to perform this work. Select items not covered by TxDOT SS2004 are to follow the Project Specifications.
3. All water and wastewater improvements shall be constructed in accordance with Texas Commission on Environmental Quality (TCEQ) Chapters 190 and 317 and conform to current AWWA requirements.
4. All construction operations shall be accomplished in accordance with applicable State statutes and U.S. Occupational Safety Department of Labor and Health Administration. Information and related reference materials may be obtained from O.S.H.A. at 611 East 6th Street, Room 303, Austin, Texas.
5. Work to be performed within State right-of-way shall be coordinated with Rick Swinson, TxDOT Roadway Maintenance Supervisor at (254) 772-1200.
6. Local Agency Phone Numbers:
   Sheriff Office: X
   Fire Department:
   Water & Wastewater Department:
   Texas Excavation Safety System: (800) DIG-TESS
7. Contractor shall maintain the job site in a safe, neat, and workman-like manner at all times. Any unattractive nuisance shall be removed or camouflaged by Contractor when directed by the Owner.
8. The Contractor shall be responsible for all coordination between himself and other contractors and utilities in the vicinity of this project. Once the contractor becomes aware of a possible conflict, it is the Contractor's responsibility to notify the Project Inspector within twenty-four (24) hours.
9. All damage caused directly or indirectly by the Contractor or his subcontractors to the street surface or subsurface outside the project limits shall be repaired to the Owner's satisfaction at the Contractor's expense. This includes any scrapes, gouges, cuts, traffic signs and markings, and/or any other damage.
10. Blasting within the project area will not be allowed.
11. The Contractor shall provide at least one chemically treated portable toilet for every 20 workmen on the job site, a minimum of one toilet is required. The unit(s) shall remain on the site during all of the phases of construction. The Contractor shall enforce the use of facilities by all personnel at the site. The unit shall be obscured from public view to the greatest extent practicable.
12. Traffic control and protective devices shall be used and shall conform to the Texas Manual on Uniform Traffic Control Devices for Streets and Highways. Barricades, warning signs, flashing devices, and flagpersons shall be provided by the Contractor. If at any time during construction the Contractor's proposed plan for handling traffic does not provide for the safe, comfortable movement of traffic, the Contractor shall immediately change his operations to correct the unsatisfactory condition. This shall be paid for at the lump sum bid price included in the bid proposal. All traffic control devices shall have ASTM Type III high intensity sheeting.
13. The Contractor shall be responsible for keeping streets adjacent to the project free of mud and construction debris at all times.
14. Contractor shall have in his possession, prior to construction, all necessary permits, and licenses, etc. Contractor shall have at least one set of approved engineering plans and specifications on-site at all times.
15. All construction activities including material storage and staging area shall be within the construction limits indicated on the drawings. Use of the area within the construction limits for these purposes will be restricted to those locations where driver sight distance to businesses and side street intersections is not obstructed and at other locations where an unsightly appearance, as determined by the owner, will not exist.

UTILITIES

1. Contractor shall be responsible for contacting all utility companies at least 48 hours prior to construction. For field location of underground franchise utilities prior to any excavation, Contractor shall notify the Texas Excavation Safety System at (800) DIG-TESS.
2. When an existing water main shut out is necessary or possible, the Contractor shall notify the Project Inspector, and the utility. A minimum of seventy-two (72) hours advance notice for all shut outs shall be provided.
3. All utility work within TxDOT right-of-way requires a Utility Permit from the TxDOT District Office and shall provide traffic control measures in accordance with the TMUTCD.
4. Contractor will be responsible for costs incurred as a result of utility relocations performed for Contractor's convenience.
5. The information shown on these drawings indicating type and location of underground, surface, and aerial utilities is approximate. The Contractor is responsible for determining the location of all utilities affected by construction for this project in order to avoid damaging those utilities and agrees to be fully responsible for any and all damage which might be occasioned by the Contractor's failure to exactly locate and preserve any and all utilities. The Contractor shall immediately arrange for repair and restoration of Contractor damaged utilities; and the Contractor shall pay for such repairs.
7. Water lines two inches or less may be Type K copper, or gasketed PVC Schedule 80 with a minimum rated working pressure of 150 psi.
8. Water lines four (4) inches and greater will be AWWA C-900.
9. Valves less than four (4) inches will be brass ball valves, valves four (4) inches and greater will be iron body gate valves. All valves shall be placed in valve boxes with ball valves in concrete boxes with cast iron lids and gate valves in cast iron boots with cast iron lids. All valve boxes shall be minimum H-20 load rating.
10. All water lines shall be installed with a tracer tape or wire.
11. All water service lines shall be embedded with 6" sand below and around the pipe and 12" of sand over the top of the pipe.
12. All bends 4" and greater shall be restrained joints or blocked.
13. Wastewater lines 4" and greater shall be gasketed PVC SDR26.
14. Install 2'x2'x8" thick reinforced concrete pad around all valve and cleanout stacks not located in flower beds.
15. Install 5'x5'x8" thick reinforced concrete pad around all manholes.
16. All manholes shall have bolt down water tight lids..

PAVING

1. All fill shall be compacted to 95% standard proctor density in a maximum of 6" lifts.
2. All barrier free ramps shall comply with the current TDLR and TxDOT regulations.
3. All exterior flat concrete shall be broom finished.
4. Subgrade shall be scarified or cut and pulverized to a minimum depth of 6". Soils shall be lime stabilized by slurry placement method at a rate of 3% by weight in accordance with Item 260, TxDOT SS2004. All deleterious material shall be removed prior to stabilization and/or compaction. Compaction shall be ordinary compaction in accordance with Item 132, TxDOT SS2004.
5. Flexible base shall be a minimum of 12" Type D, Grade 1 in accordance with Item 247, TxDOT SS2004 under HMAC pavement..
6. The prime coat shall be a MC-30 in accordance with Item 300, TxDOT SS2004, and applied at a rate of 0.2 gal/sy in accordance with Item 310, TxDOT SS2004.
7. The surface treatment shall be a single course treatment constructed in accordance with Item 316, TxDOT SS2004. The asphalt shall be Type AC-20-5TR in accordance with Item 300, TxDOT SS2004 and applied at a rate of 0.4 gal/sy. The aggregate shall be a Type B, Grade 4 in accordance with Item 302, TxDOT SS2004, applied at a rate of 0.01 CY/SY.
8. The pavement surface course shall be 2" of Type C HMAC in accordance with Item 340, TxDOT SS2004.
9. Flexible base course shall be installed in max. 6", min. 3" lifts. The curb and gutters shall be constructed upon the first course. The final course of flexible base shall be placed following a minimum 72 hours curing time for the curb and gutter.
10. HMAC pavement shall not be placed in concrete gutters.

ENVIRONMENTAL

1. The placement of erosion/sedimentation controls shall be in accordance with the plans and in place prior to other construction related activities.
2. No soil distrubing activities shall occur prior to the SWP3 and associtated best management practices being fully implemented and inspected by the TxDOT District Environmental Coordinator. The Contractor shall schedule the on-site meeting.
3. Seeding for erosion control shall be in accordance with Items 164 and 166, TXDOT SS2004, for the Waco District #9, Permanent Urban Seed Mix; Clay Soils; Bermudagrass.
4. SWP3 to be funished by Owner. Reference sheet C10.0 for plan.
5. The Notice of Intent (NOI) shall be posted in a location viewable to the public until construction is complete and Notice of Termintation (NOT) submitted.
6. The Contractor or its representative shall review the site weekly and after any major storm. Adjustments / repairs shall be made as needed and the District Environmental Coordinator notified of adjustments.
7. Contractor shall revegitate disturbed areas upon completion of grading activities.
8. Excess excavated material shall not be desposited in low areas or along natural drainage ways. If the Contractor places excess material in drainage ways, he shall be responsible for all damage resulting from such fill and he shall remove the material at his cost.
9. Upon the completion of construction, the right-of-way landscaping shall be restored.

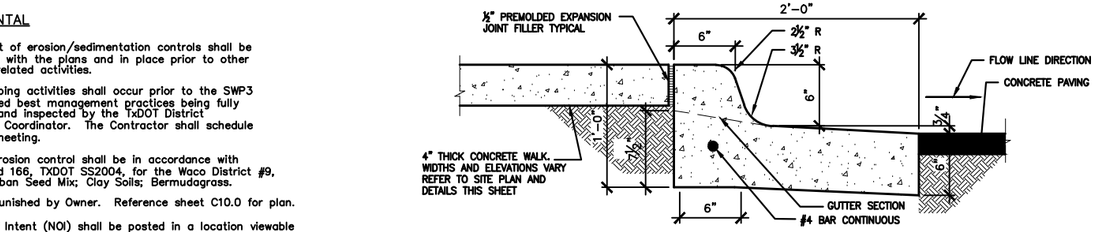

SUBGRADE TREATMENT: 3% LIME
FLEXIBLE BASE: TYPE D, GRADE 1
PRIME COAT: TYPE MC-30, APPLICATION RATE 0.2 GAL/SY
SURFACE TREATMENT SINGLE COURSE:
AGGREGATE: TYPE B, GRADE 4, APPLICATION RATE 0.01 CY/SY
ASPHALT: TYPE AC-20-5TR, APPLICATION RATE 0.4 GAL/SY
PAVEMENT SURFACE: 2" HMAC TYPE C.

1 FLEXIBLE BASE PAVEMENT SECTION
SCALE: NTS

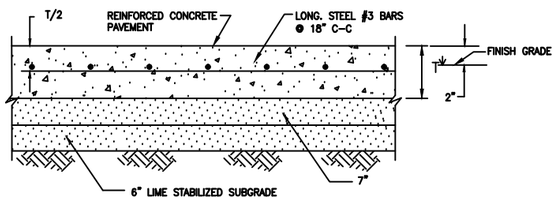

NOTE: CONCRETE PAVEMENT THICKNESS (T) SHALL BE 7" AT APRONS AND FUEL STATION

2 REINFORCED APRON PAVEMENT SECTION
SCALE: NTS

3 CURB AND GUTTER SECTION - SPILL
SCALE: NTS

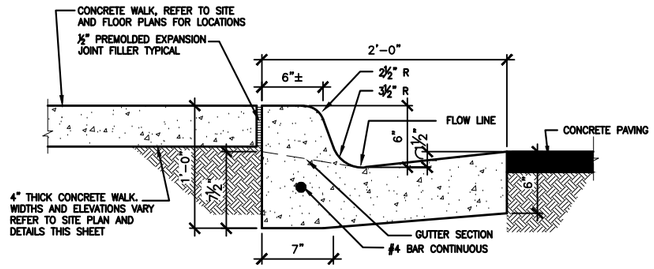

4 CURB AND GUTTER SECTION - CATCH
SCALE: NTS

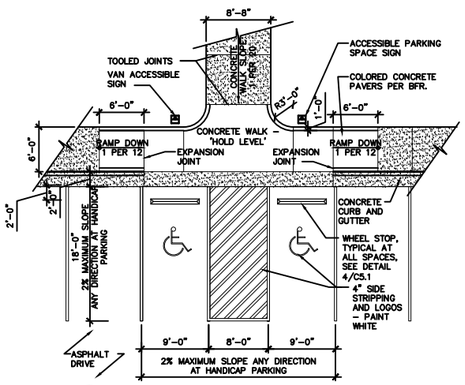

5 ADA MARKINGS
SCALE: NTS

Texas Department of Transportation
125 E. 11th Street
Austin, Texas 78701-2483
(512) 416-3048

Copyright © 2005 Texas Department of Transportation

THIS DOCUMENT IS RELEASED FOR THE PURPOSE OF INFORMATION ONLY NOT FOR REGULATORY APPROVAL, PERMITTING, OR CONSTRUCTION.

WACO AREA ENGINEER AND MAINTENANCE FACILITY
WACO, MCLENNAN COUNTY
WACO DISTRICT

Revisions

Drawn by: NJP

Project No.
CBC4704-00672
Date
03.2007
Sheet No.
C1.0

1 of 10 sheets

CIVIL NOTES

CADFILE: T:\MNTFM\D02FTWCBC4704-00-837702-77-4700408374\Acad\prototypical pdfs\waco\Acad\CivilC1-0.dwg Plotted: Fri, Aug. 07, 2009 @ 1:28 PM By: EEILERT

⚠ CONTROL POINTS

POINT #	NORTHING	EASTING	ELEVATION	DESCRIPTION
313	10514639.81	3280304.43	596.09	CP 5/8 IR W/CAP
322	10514348.86	3281117.04	592.80	CP 5/8 IR W/CAP
323	10514235.09	3280578.83	604.96	CP 5/8 IR W/CAP

NOTE:
CONTRACTOR SHALL ESTABLISH BENCHMARK LOCATION AND ELEVATION AT EXISTING TxDOT ROW MARKER APPROXIMATELY 150 FEET NE OF EXISTING CONCRETE DRIVE

FENCE CORNER POSTS

POINT #	NORTHING	EASTING
67	10514603.50	3280508.33
68	10514982.66	3280659.46
69	10514999.46	3280691.72
70	10515086.11	3281113.73
71	10515070.10	3281311.62
72	10515011.99	3281447.34
73	10514021.27	3281029.91
74	10514280.58	3280378.81

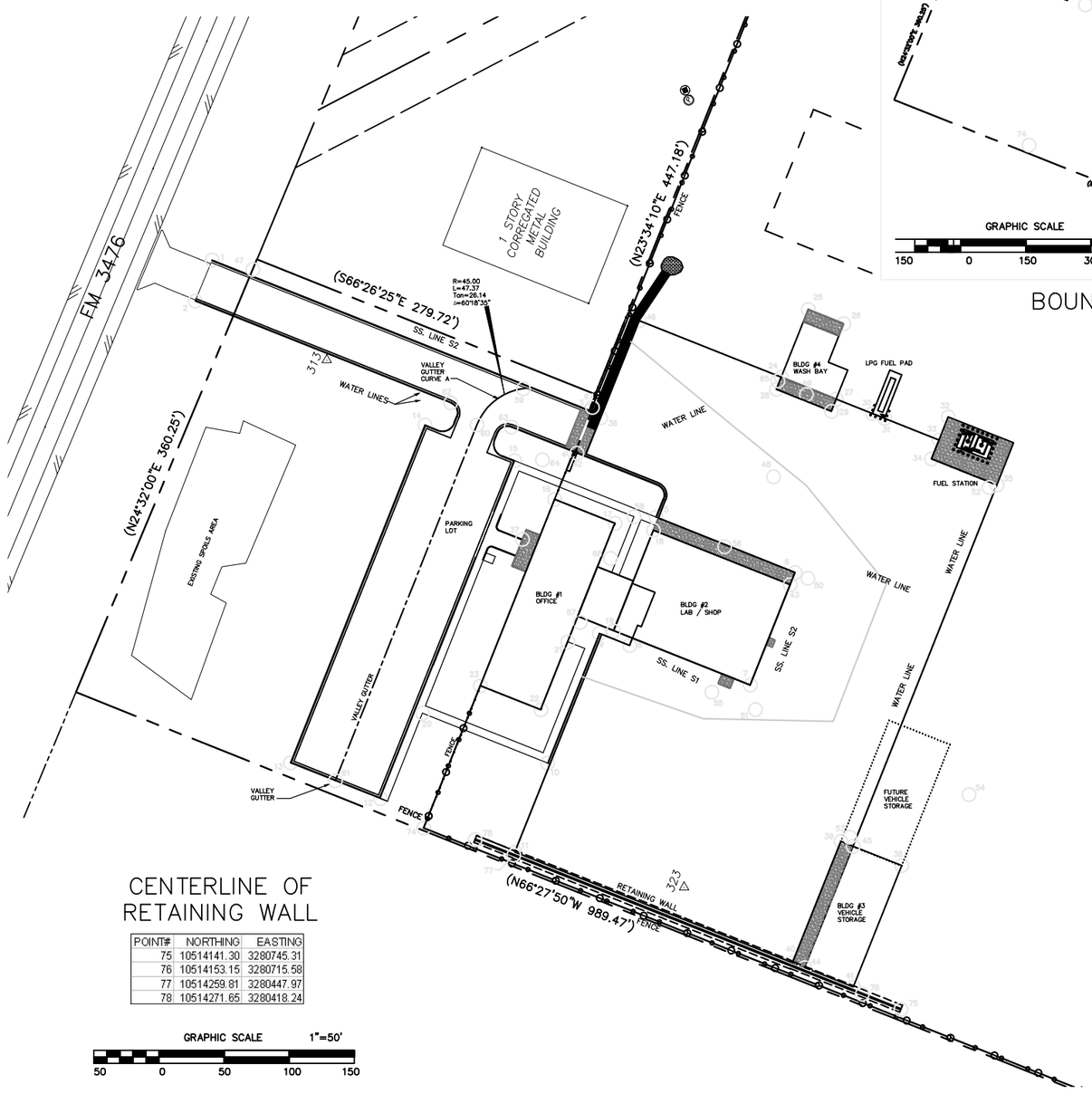

CENTERLINE OF RETAINING WALL

POINT#	NORTHING	EASTING
75	10514141.30	3280745.31
76	10514153.15	3280715.58
77	10514259.81	3280447.97
78	10514271.65	3280418.24

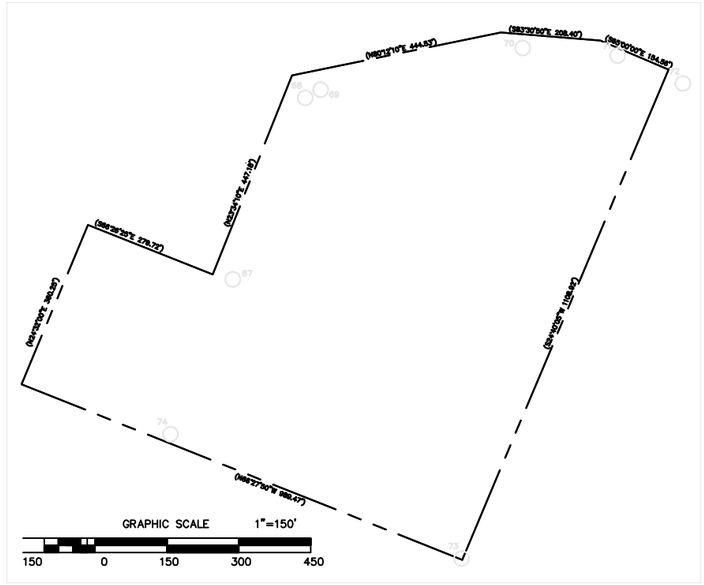

BOUNDARY DESCRIPTION

HORIZONTAL CONTROL PLAN POINT LIST

POINT #	NORTHING	EASTING	ELEVATION	DESCRIPTION
1	10514716.50	3280216.37	598.37	Back of curb
2	10514685.12	3280203.26	598.98	Back of curb
3	10514600.98	3280506.42	594.27	Back of curb
4	10514569.40	3280493.82	594.27	Back of curb
5	10514519.26	3280557.15	598.98	Back of curb
6	10514476.71	3280663.98	598.66	Corner of concrete apron
7	10514390.31	3280629.57	599.00	Corner of building #2
8	10514420.75	3280536.93	598.51	Corner of sidewalk
9	10514430.03	3280513.61	598.78	Back of curb/corner of sidewalk
10	10514330.51	3280473.97	603.05	Back of curb/corner of sidewalk
11	10514262.07	3280448.87	604.21	Pavement corner
12	10514303.29	3280345.36	600.88	Back of curb
13	10514330.67	3280276.61	600.88	Back of curb
14	10514589.88	3280379.83	595.96	Back of curb
15	10514562.49	3280448.59	595.96	Back of curb
16	10514532.90	3280479.30	599.00	Corner of building #1
17	10514514.40	3280525.76	599.00	Corner of building #1
18	10514509.23	3280555.30	599.00	Corner of building #2
19	10514431.89	3280524.50	598.74	Corner of building #2
20	10514368.77	3280377.90	598.85	Corner of sidewalk
21	10514423.56	3280489.31	599.00	Corner of sidewalk
22	10514371.33	3280468.78	599.00	Corner of building #1
23	10514389.83	3280422.33	599.00	Corner of building #1
24	10514626.59	3280653.41	595.10	Wash bay corner
25	10514678.61	3280674.13	595.10	Corner of concrete apron
26	10514667.76	3280701.38	595.10	Corner of concrete apron
27	10514609.81	3280695.52	595.10	Wash bay corner
28	10514617.30	3280649.71	594.62	Corner of concrete apron
29	10514600.52	3280691.82	595.42	Corner of concrete apron
30	10514598.71	3280723.40	595.90	Corner of fuel pad
31	10514595.01	3280732.69	595.90	Corner of fuel pad
32	10514596.17	3280781.58	596.00	Corner of fuel station
33	10514578.36	3280774.49	596.15	Corner of HMAC pavement
34	10514563.89	3280768.73	596.00	Corner of fuel station
35	10514543.91	3280818.89	596.00	Corner of fuel station
36	10514595.58	3280514.59	593.67	Corner of concrete apron
37	10514502.13	3280454.68	598.21	Corner of sidewalk
38	10514251.70	3280745.84	598.97	Corner of buildings #3
39	10514270.29	3280699.16	598.63	Corner of concrete apron
40	10514177.16	3280662.07	598.63	Corner of concrete apron
41	10514158.57	3280708.75	598.97	Corner of building #3
42	10514568.35	3280496.47	594.27	Back of curb
43	10514467.42	3280660.28	599.00	Corner of building #2
44	10514173.46	3280671.36	598.97	Corner of building #3
45	10514266.59	3280708.45	598.97	Corner of building #3
46	10514670.06	3280544.25	592.07	Corner of HMAC pavement
47	10514709.44	3280247.60	596.33	SSWR manhole line S2 Sta. 7+21.01-rim
48	10514550.22	3280647.39	596.21	SSWR manhole line S2 Sta. 2+90.71-rim
49	10514613.56	3280672.62	594.73	Double clean-out
50	10514472.36	3280673.66	598.31	SSWR manhole line S2 Sta. 2+08.54-rim
51	10514371.52	3280633.50	599.30	SSWR manhole line S1 Sta. 2+53.70 = SSWR manhole line S2 Sta. 1+00.00
52	10514542.04	3280812.77		Water
53	10514273.55	3280705.84		Water
54	10514306.17	3280797.58		Connect SSWR line S1 Sta.0+77.09-connect OSSF
55	10514384.89	3280599.93	598.57	SSWR manhole line S1 Sta. 2+89.84-lateral
56	10514496.51	3280609.85	598.66	Concrete apron
57	10514438.47	3280499.04		Double clean-out SSWR line S1 Sta. 4+04.08
58	10514519.53	3280540.24	598.45	Corner of sidewalk
59	10514617.93	3280455.28	593.87	Valley gutter P.C.
60	10514590.04	3280419.72	595.45	Valley gutter P.T.
61	10514316.98	3280310.98	600.38	End transition of valley gutter
62	10514606.95	3280399.54	595.28	Back of curb CR.
63	10514588.44	3280446.01	594.78	Back of curb CR.
64	10514563.32	3280469.83		Water line continue on irrigation
65	10514623.81	3280650.77		Water
66	10514487.66	3280522.17		Water line continue on plumbing

NOTES:
1. ALL BACK OF CURB ELEVATIONS ARE TOP OF 6" CURB.
2. ALL BUILDING CORNER ELEVATIONS ARE FINISHED FLOOR.
3. BENCHMARK: TxDOT AERIAL PANEL HV3-83 – PK NAIL IN ASPHALT APPROX. 950 FEET NORTH OF THE CENTER OF FM 2063, 5 FEET WEST OF THE EAST RIDGE PAVEMENT (SHOULDER) ON THE EAST SIDE OF THE NORTH BOUND TRAFFIC LANE OF INTERSTATE HIGHWAY NO. 35. ELV = 585.77'
3. FOR CONSTRUCTION LAYOUT REQUIREMENTS SEE DIVISION 1 SPECIFICATIONS, SECTION 01300, PARAGRAPH 1.4.

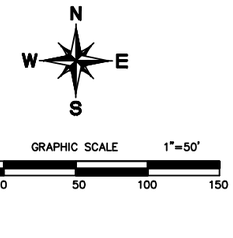

HORIZONTAL CONTROL PLAN

Texas Department of Transportation
125 E. 11th Street
Austin, Texas 78701-2483
(512) 416-3048

Copyright © 2005 Texas Department of Transportation

THIS DOCUMENT IS RELEASED FOR THE PURPOSE OF INFORMATION ONLY NOT FOR REGULATORY APPROVAL, PERMITTING, OR CONSTRUCTION.

WACO AREA ENGINEER
AND MAINTENANCE FACILITY
WACO, MCLENNAN COUNTY
WACO DISTRICT

Revisions

Drawn by: ∞

Project No.
CBC4704-00672
Date
05.21.2007
Sheet No.
C2.0

CADFILE: T:\MNTFM\D02FTW\CBC4704-00-83702-77-470400837\Acad\prototypical pdfs\waco\Acad\Civil\C2-0.dwg Plotted: Fri, Aug. 07, 2009 @ 1:44 PM By: EEILERT

CADFILE: T:\MNT\FMID02FTW\CBC4704-00-83702-77-4704008837\Acad\prototypical pdfs\waco\Acad\Civil\C3-0.dwg Plotted: Fri, Aug. 07, 2009 @ 1:42 PM By: EEILERT

GRAPHIC SCALE 1"=500'

500 0 500 1000 1500

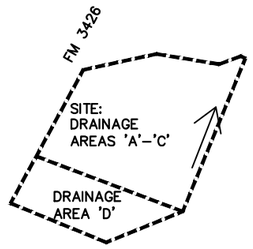

OFFSITE DRAINAGE AREA MAP

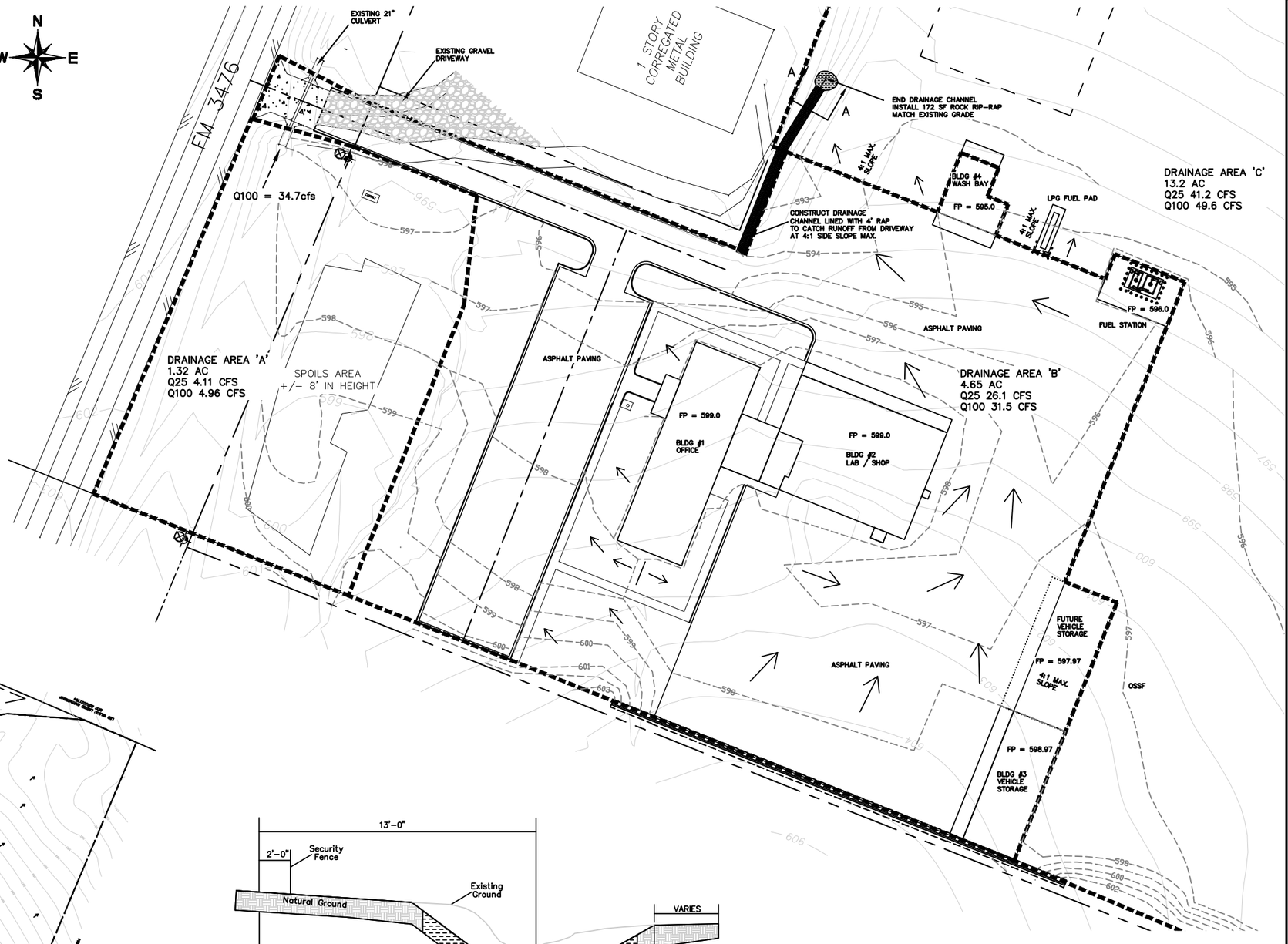

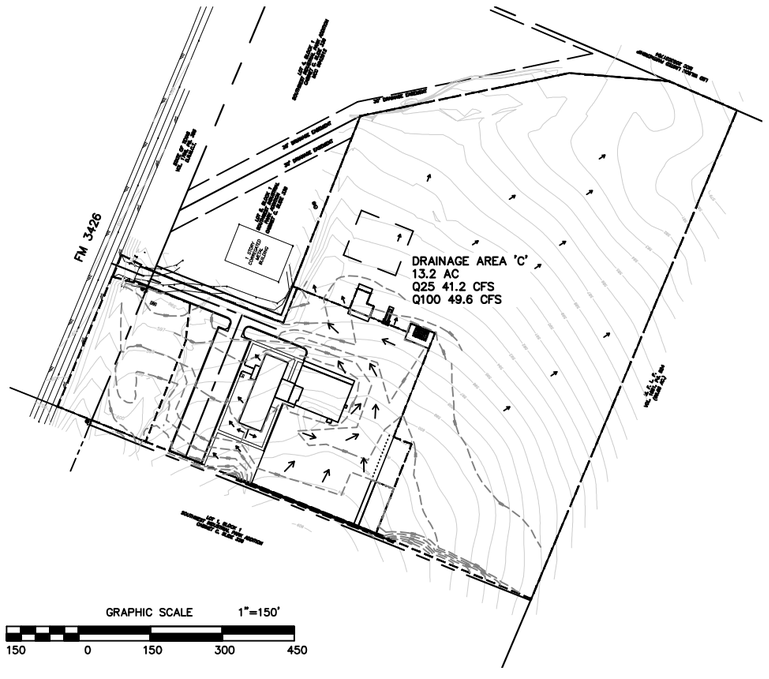

GRAPHIC SCALE 1"=150'

150 0 150 300 450

OVERALL SITE DRAINAGE AREA MAP

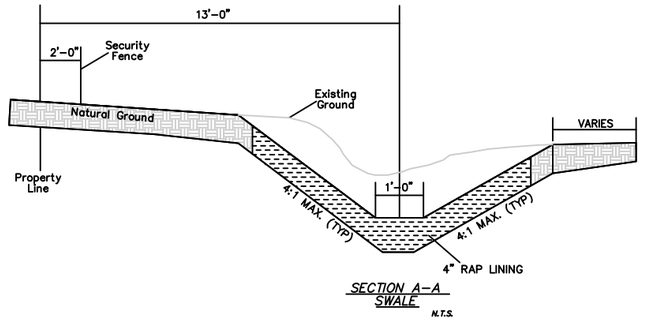

SECTION A–A
SWALE
N.T.S.

GRAPHIC SCALE 1"=40'

40 0 40 80 120

LEGEND

- EXISTING CONTOUR
- PROPOSED CONTOUR
- FLOW DIRECTION
- DRAINAGE AREA BOUNDARY

DRAINAGE CALCULATIONS

Drainage Area	Area	I25	I100	Runoff Coefficient "C"	Q25	Q100	Land Usage
	Acres	in / hr	in / hr		cfs	cfs	
A	1.32	6.23	7.52	0.50	4.11	4.96	Open Lot
B	4.65	6.23	7.52	0.90	26.07	31.47	Parking Lot & Building
C	13.2	6.23	7.52	0.50	41.12	49.63	Open Lot
D	7.92	6.23	7.52	0.50	24.67	29.78	Offsite Drainage
To = 15 minutes							

SITE GRADING & DRAINAGE PLAN

Texas Department of Transportation
125 E. 11th Street
Austin, Texas 78701-2483
(512) 416-3048

Copyright © 2005 Texas Department of Transportation

THIS DOCUMENT IS RELEASED FOR THE PURPOSE OF INFORMATION ONLY NOT FOR REGULATORY APPROVAL, PERMITTING, OR CONSTRUCTION.

WACO AREA ENGINEER
AND MAINTENANCE FACILITY
WACO, MCLENNAN COUNTY
WACO DISTRICT

Revisions

Drawn by: NJP

Project No.
CBC4704-00672
Date
03.2007
Sheet No.
C3.0

LEGEND	
X 500.00	PROPOSED ELEVATION
TC	TOP OF CURB
EA	EDGE OF ASPHALT
FG	FINISHED GRADE
TW	TOP OF WALL
FL	FLOWLINE OF CHANNEL

GRAPHIC SCALE 1"=40'

40 0 40 80 120

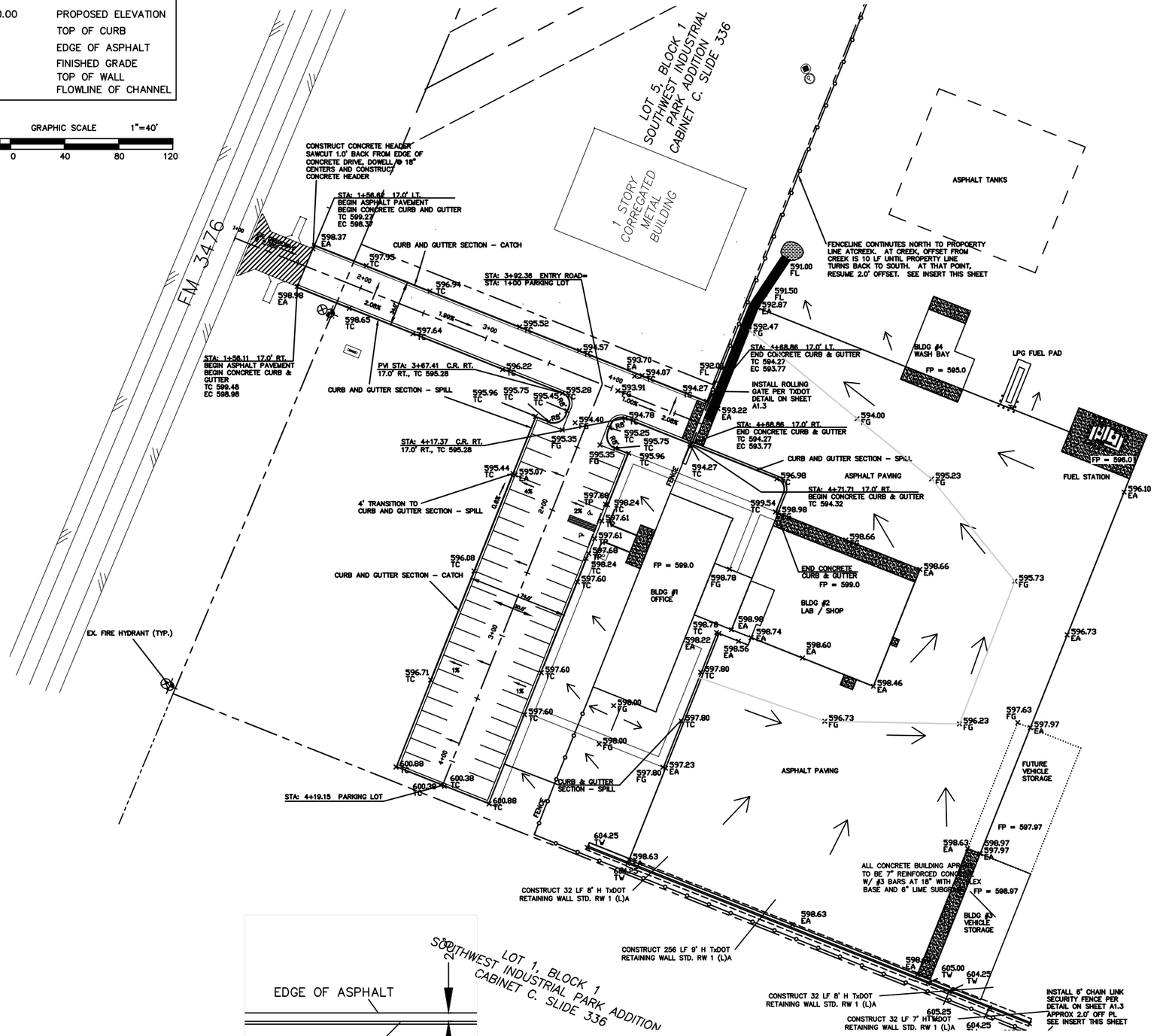

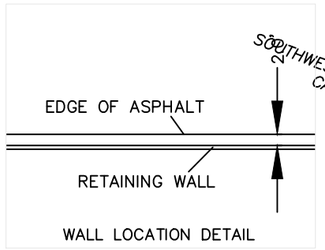

WALL LOCATION DETAIL

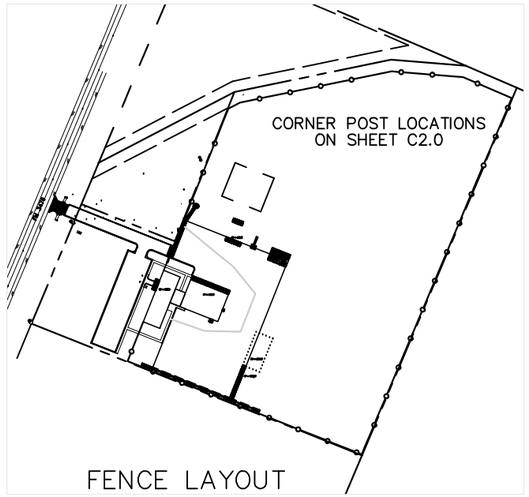

FENCE LAYOUT

GRAPHIC SCALE 1"=200'

200 0 200 400 600

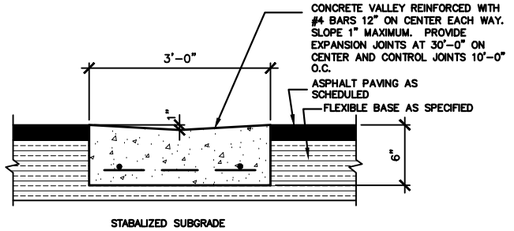

1 CONCRETE VALLEY GUTTER
SCALE: NTS

ADDITIONAL PAVING DETAILS ON SHEET C1.0

SITE PAVING PLAN

Texas Department of Transportation
125 E. 11th Street
Austin, Texas 78701-2483
(512) 416-3048

Copyright © 2005 Texas Department of Transportation

THIS DOCUMENT IS RELEASED FOR THE PURPOSE OF INFORMATION ONLY NOT FOR REGULATORY APPROVAL, PERMITTING, OR CONSTRUCTION.

WACO AREA ENGINEER AND MAINTENANCE FACILITY
WACO, MCLENNAN COUNTY
WACO DISTRICT

Revisions

Drawn by: NJP

Project No. CBC4704-00672
Date 03.2007
Sheet No. C4.0

4 of 10 sheets

CADFILE: T:\MNTFM\D02FT\WCBC4704-00-837\02-77-4704008377\Acad\prototype\pcsd pdfs\waco\Acad\Civil\C4-0.dwg Plotted: Fri, Aug. 07, 2009 @ 1:46 PM By: EEILERT

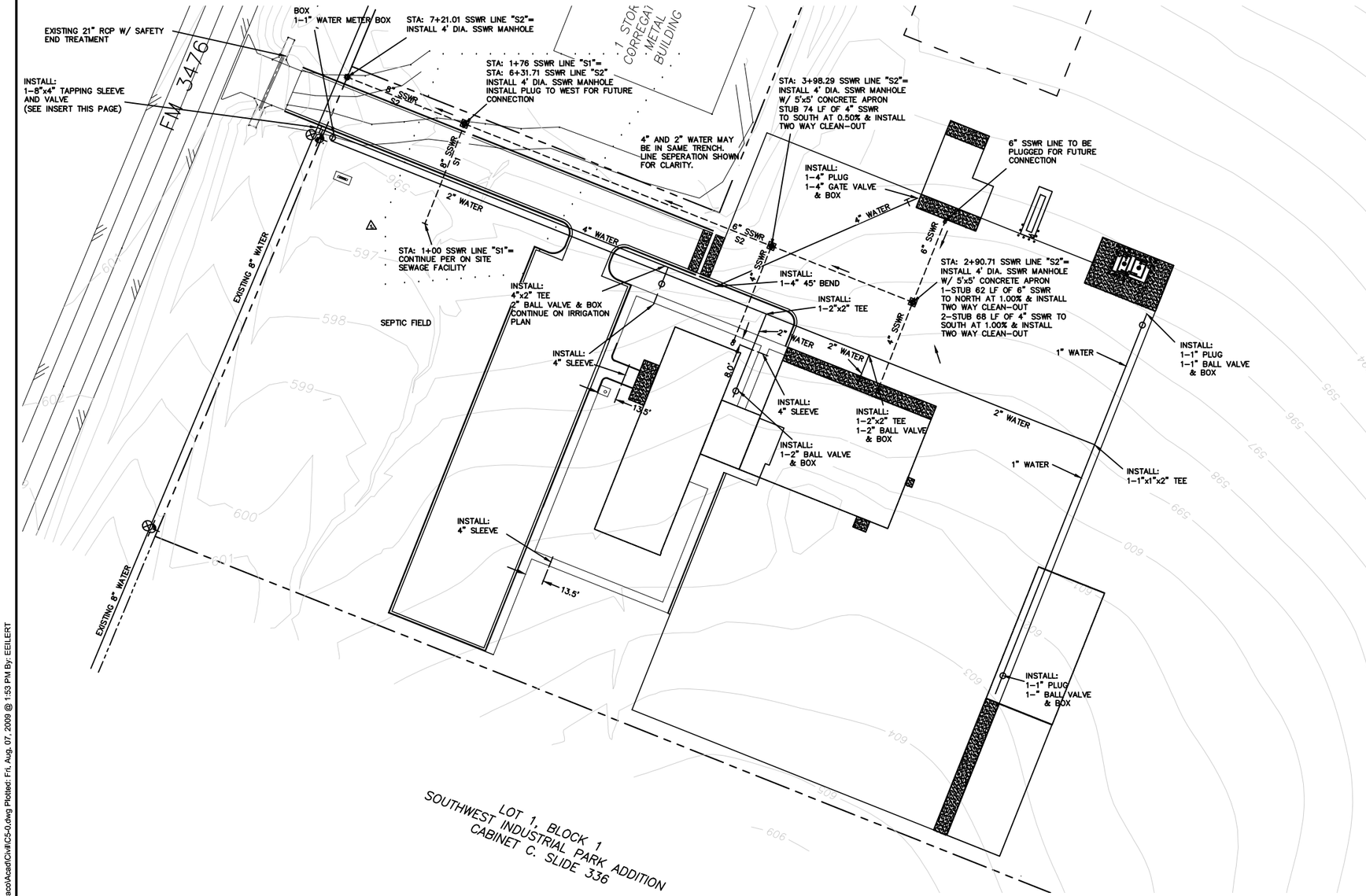

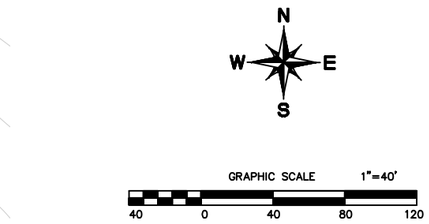

LEGEND

- PROP. WATER
- PROP. SSWR
- PROP. BALL VALVE
- PROP. GATE VALVE

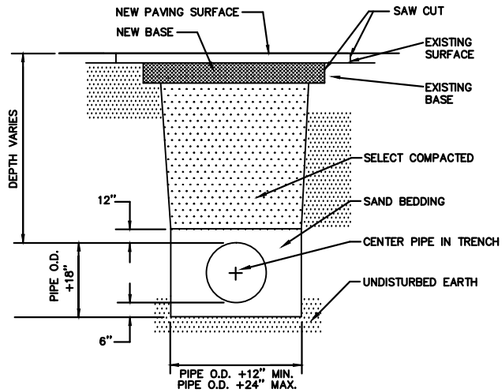

ELEVATION

NOTES:

1. THE EXISTING PAVING SURFACE SHALL BE SAW CUT IN A STRAIGHT LINE, A MINIMUM OF 12" WIDER THAN THE UNDISTURBED SIDES OF THE TRENCH, SYMMETRICAL ABOUT THE CENTERLINE OF THE EXCAVATION.
2. ANY CONCRETE PAVING SHALL BE SAW CUT 6" WIDER THAN UNDISTURBED SIDES OF EXCAVATION.
3. IF EXCAVATION AREA IS OPEN FOR TEMPORARY PUBLIC USE THE SURFACE SHALL BE MAINTAINED LEVEL WITH ADJACENT RIDING SURFACE WITH COLD MIX OR FLEXIBLE BASE MATERIAL.
4. ROAD BASE AND SURFACE MATERIALS SHALL BE REPLACED IN KIND OF EQUAL THICKNESS WITH MINIMUM BASE THICKNESS OF 8".

3 PIPE BEDDING
SCALE:NTS

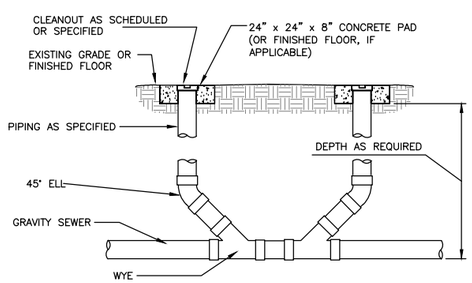

1 TWO WAY CLEAN OUT
SCALE:NTS

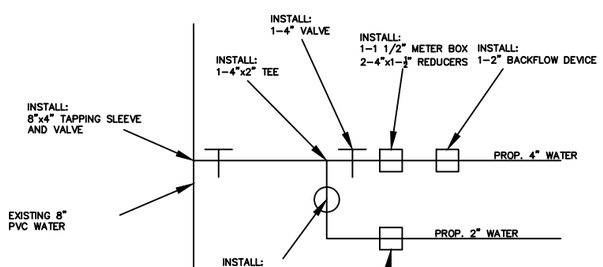

2 WATER CONNECTION
SCALE:NTS

NOTES:

1. New 4" and 2" water line may be installed in same trench with minimum 6" separation.
2. Edge of water line trench nom. 3' off back of curb along driveway.
3. 4" and 2" water line separation shown for clarity.
4. All 4" PVC sleeves shall be 2' below finished grade and extend 1' beyond pavement.
5. Meters provided by city.
6. Sanitary sewer flow line data on profile sheet.
7. Contractor shall coordinate with City of Waco Water and Wastewater Department prior to making tap.
8. Contractor shall use appropriate fittings or taps when transitioning from 4" C-900 to 2" Sch. 80.

WATER & WASTEWATER PLAN

Texas Department of Transportation
125 E. 11th Street
Austin, Texas 78701-2483
(512) 416-3048
Copyright © 2005 Texas Department of Transportation

THIS DOCUMENT IS RELEASED FOR THE PURPOSE OF INFORMATION ONLY NOT FOR REGULATORY APPROVAL, PERMITTING, OR CONSTRUCTION.

WACO AREA ENGINEER AND MAINTENANCE FACILITY
WACO, MCLENNAN COUNTY
WACO DISTRICT

Revisions
1 OSSF MOVED TO FRONT

Drawn by: NJP

Project No.
CBC4704-00672
Date
03.2007
Sheet No.
C5.0

5 of 10 sheets

CADFILE: T:\MNT\FMID02FTW\CBC4704-00-83702-77-4704000837\Acad\prototypical pdfs\waco\Acad\Civil\C5-0.dwg Plotted: Fri, Aug. 07, 2009 @ 1:53 PM By: EEILERT

CADFILE: T:\MNTFM\D02FTW\CBC4704-00-837\02-77-470400837\Acad\prototypical pdfs\waco\Acad\Civil\C6-0.dwg Plotted: Fri, Aug. 07, 2009 @ 1:55 PM By: EEILERT

WASTEWATER PROFILES

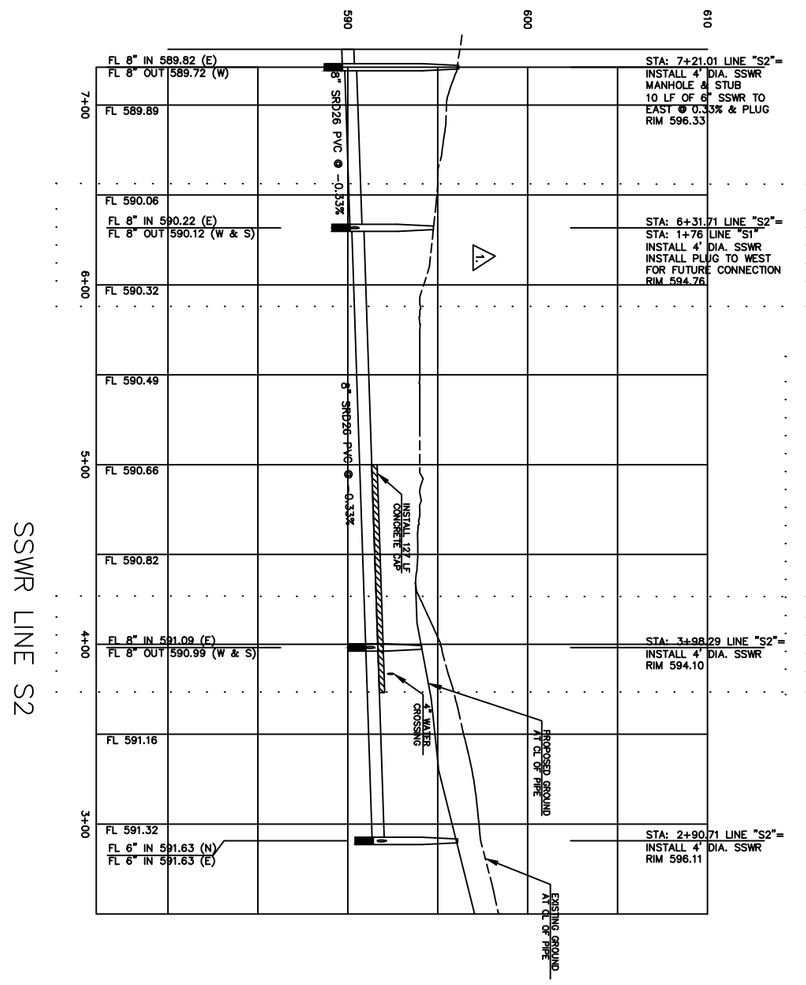

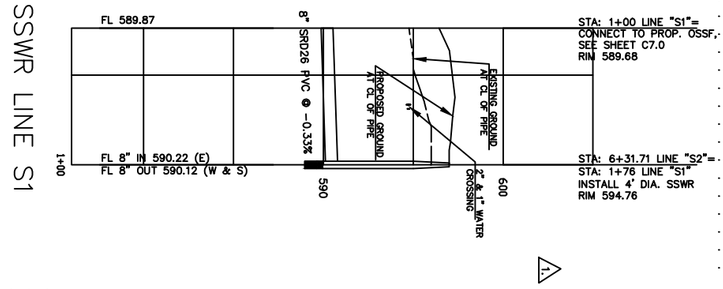

HORIZ. SCALE = 1":40'
VERT. SCALE = 1":4'

Revisions	1 S1 REVISED PER SHEET C5
Drawn by:	NJP
Project No.	CBC4704-00672
Date	03.2007
Sheet No.	C6.0
6 of 10 sheets	

WACO AREA ENGINEER AND MAINTENANCE FACILITY

WACO, MCLENNAN COUNTY
WACO DISTRICT

THIS DOCUMENT IS RELEASED FOR THE PURPOSE OF
INFORMATION ONLY
NOT FOR REGULATORY
APPROVAL, PERMITTING,
OR CONSTRUCTION.

Texas Department of Transportation
125 E. 11th Street
Austin, Texas 78701-2483
(512) 416-3048

Copyright © 2005 Texas Department of Transportation

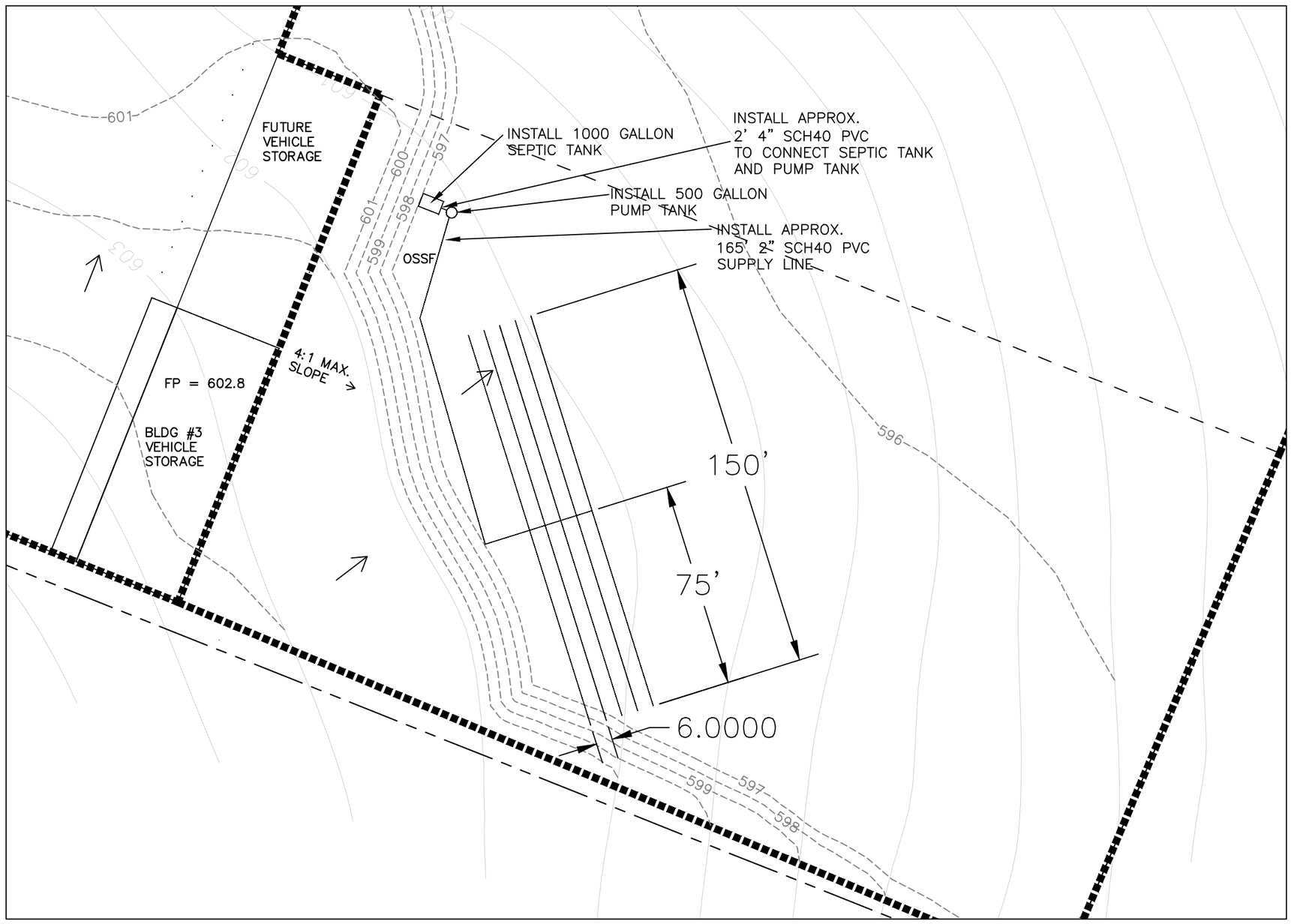

Texas Department of Transportation
125 E. 11th Street
Austin, Texas 78701-2483
(512) 416-3048
Copyright © 2005 Texas Department of Transportation

THIS DOCUMENT IS RELEASED FOR THE PURPOSE OF INFORMATION ONLY NOT FOR REGULATORY APPROVAL, PERMITTING, OR CONSTRUCTION.

WACO AREA ENGINEER AND MAINTENANCE FACILITY

WACO, MCLENNAN COUNTY
WACO DISTRICT

Revisions

Drawn by: JCI

Project No.
CBC4704-00672
Date
03.2007
Sheet No.
C7.0

CADFILE: T:\MNTFM\DD02FT\WCBC4704-00-837\02-77-4704008837\Acad\prototypical pdf's\waco\Acad\Civil\C7-0.dwg Plotted: Fri, Aug. 07, 2009 @ 2:02 PM By: EEILERT

Note: Install laterals holes down.
Note: Geotextile fabric shall be placed between the rock/soil interface.
Note: Zabel orifice shields (Model PDS-OS-1.25) shall be placed over every 5/32" hole.

LINE #	ELEV. TRENCH BOTTOM	ELEV. LATERAL INVERT	HOLES SPACING
1	594.0	594.5	5.0'
2	594.0	594.5	5.0'
3	594.0	594.5	5.0'
4	594.0	594.5	5.0'
5	594.0	594.5	5.0'

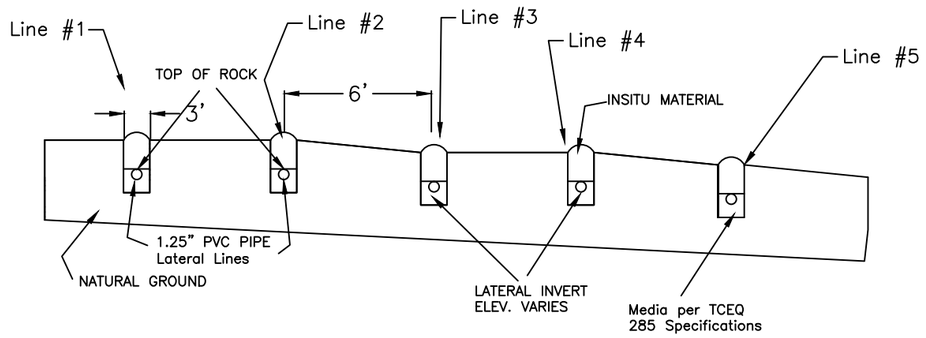

FRONT VIEW

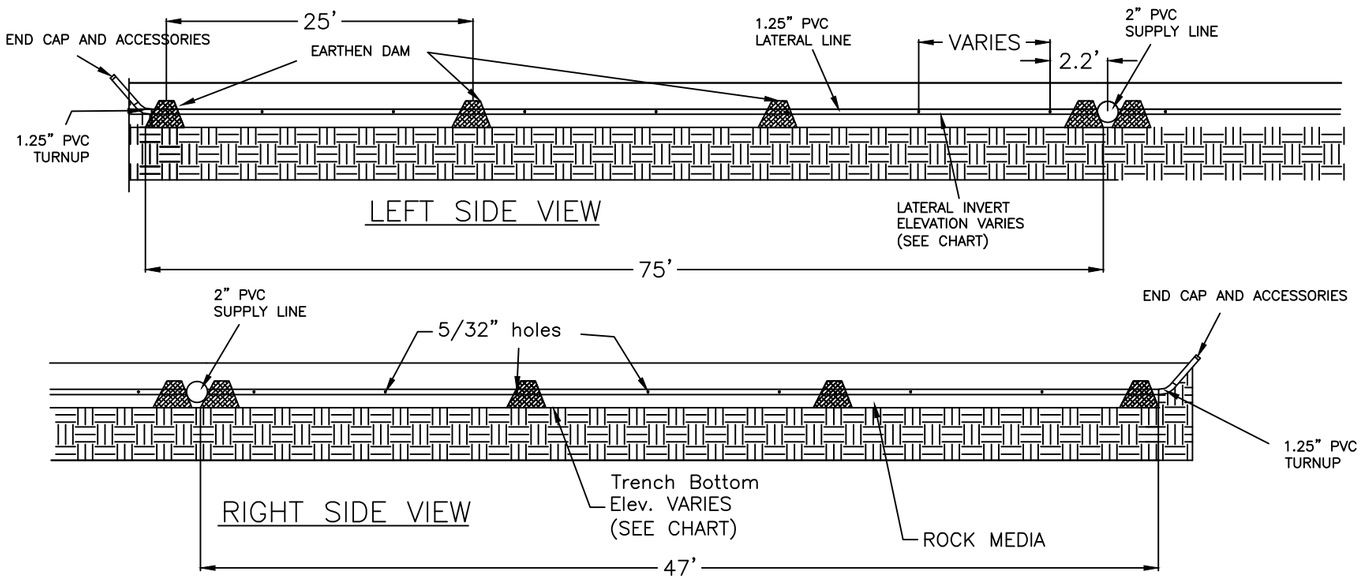

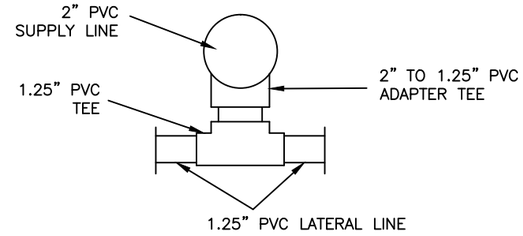

DETAIL AT SUPPLY LINE CONNECTION
(NOT TO SCALE)

Texas Department of Transportation
125 E. 11th Street
Austin, Texas 78701-2483
(512) 416-3048

Copyright © 2005 Texas Department of Transportation

THIS DOCUMENT IS RELEASED FOR THE PURPOSE OF INFORMATION ONLY NOT FOR REGULATORY APPROVAL, PERMITTING, OR CONSTRUCTION.

WACO AREA ENGINEER
AND MAINTENANCE FACILITY
WACO, MCLENNAN COUNTY
WACO DISTRICT

Revisions

Drawn by: JGI

Project No.
CBC4704-00672
Date
03.2007
Sheet No.
C8.0

8 of 10 sheets

CADFILE T:\MNTFMD02FTWCBC4704-00-93702-77-470400837\Acad\prototypical pdfs\waco\Acad\Civil\C8-0.dwg Plotted: Fri, Aug. 07, 2009 @ 2:04 PM By: EEILERT

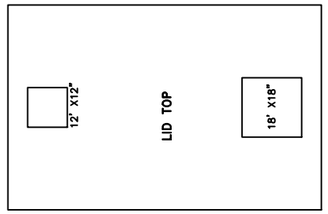

TOP VIEW

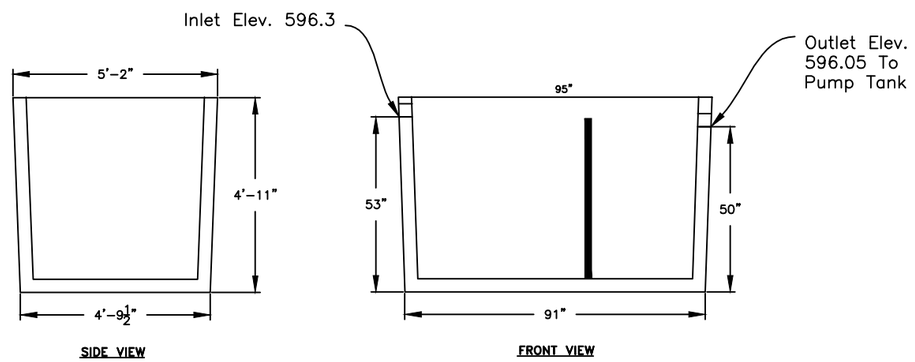

SIDE VIEW FRONT VIEW

APC 1000 Gallon Tank Dimensions (Two Chambers)

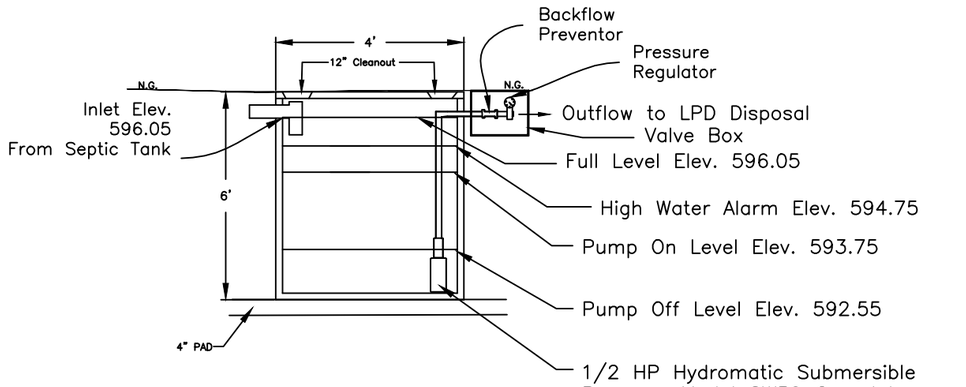

500 Gallon Pump Tank

Texas Department of Transportation
125 E. 11th Street
Austin, Texas 78701-2483
(512) 416-3048
Copyright © 2005 Texas Department of Transportation

THIS DOCUMENT IS RELEASED FOR THE PURPOSE OF:
INFORMATION ONLY
NOT FOR REGULATORY APPROVAL, PERMITTING, OR CONSTRUCTION.

WACO AREA ENGINEER AND MAINTENANCE FACILITY
WACO, MCLENNAN COUNTY
WACO DISTRICT

Revisions

Drawn by: JGI

Project No.
CBC4704-00672
Date
03.2007
Sheet No.
C9.0

9 of 10 sheets

CADFILE: T:\MNTFMD02FTWCBC4704-00-837102-77-47\04008837\Acad\prototypical pdfs\waco\AcadCivilC9-0.dwg Plotted: Fri, Aug. 07, 2009 @ 2:08 PM By: EEILERT

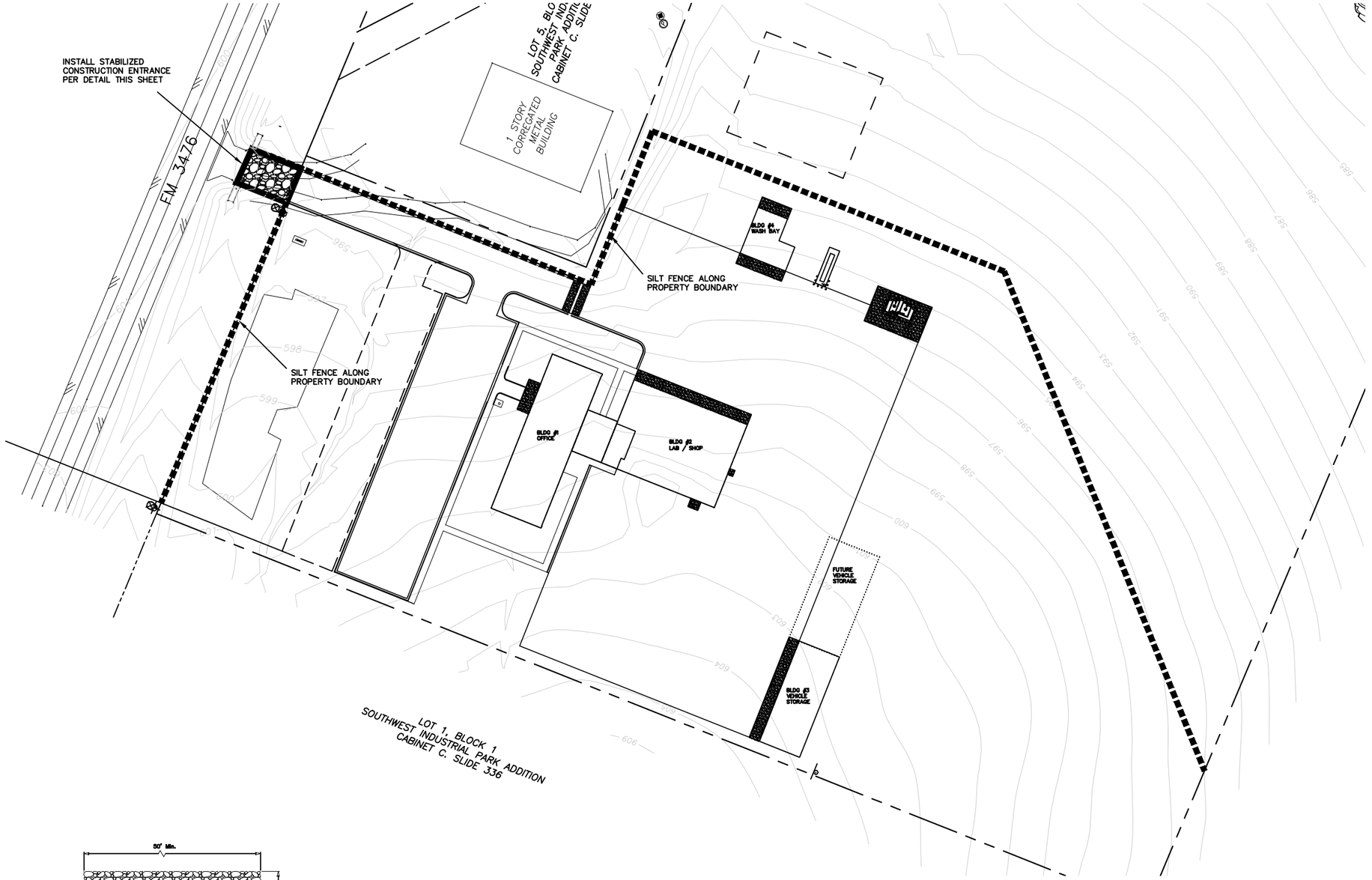

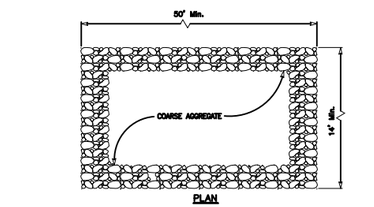

STABILIZED CONSTRUCTION ENTRANCE

GENERAL NOTES

1. THE LENGTH OF THE STABILIZED CONSTRUCTION ENTRANCE SHALL NOT BE LESS THAN 50'.
2. THE COARSE AGGREGATE SHOULD BE OPEN GRADED WITH A SIZE OF 4" TO 8".
3. THE APPROACH TRANSITIONS SHOULD BE NO STEEPER THAN 6:1 AND CONSTRUCTED AS DIRECTED BY THE ENGINEER.
4. THE CONSTRUCTION ENTRANCE FOUNDATION COURSE SHALL BE FLEXIBLE BASE, BITUMINOUS CONCRETE, PORTLAND CEMENT CONCRETE OR OTHER MATERIAL AS APPROVED BY THE ENGINEER.
5. THE GUIDELINES SHOWN HEREON ARE SUGGESTIONS ONLY AND MAY BE MODIFIED BY THE ENGINEER.

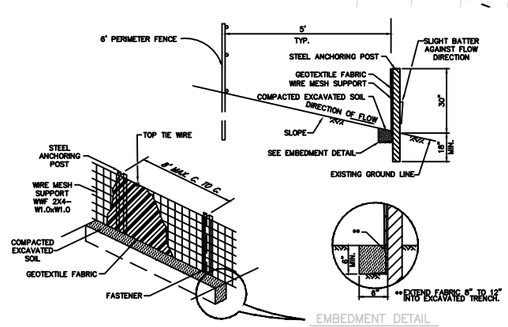

SILT FENCING DETAILS
N.T.S.

STORM WATER POLLUTION PREVENTION PLAN

Texas Department of Transportation
125 E. 11th Street
Austin, Texas 78701-2483
(512) 416-3048

Copyright © 2005 Texas Department of Transportation

THIS DOCUMENT IS RELEASED FOR THE PURPOSE OF INFORMATION ONLY NOT FOR REGULATORY APPROVAL, PERMITTING, OR CONSTRUCTION.

WACO AREA ENGINEER AND MAINTENANCE FACILITY
WACO, MCLENNAN COUNTY
WACO DISTRICT

Revisions

Drawn by: NJP

Project No.
CBC4704-00672
Date
03.2007
Sheet No.
C10.0

11 of 10 sheets

CADFILE: T:\MNTFM\D02FTW\CBC4704-00-837\02-77-4\704008374\Acad\grotoolypical pdfs\waco\Acad\Civil\C10-0.dwg Plotted: Fri, Aug. 07, 2009 @ 2:10 PM By: EEILERT

KEY NOTES:

1. HANDICAP CURB CUT - REFER TO CIVIL DRAWINGS FOR ADDITIONAL NOTES.
2. 4" WIDE STRIPPING AND HANDICAP LOGOS - REFER TO CIVIL DRAWINGS.
3. FLAG POLE - REFER TO DETAIL 9 SHEET A1.2
4. 6' WIDE , 4" THICK REINFORCED CONCRETE SIDEWALK (TYP) REFER TO CIVIL DRAWINGS.
5. REINFORCED CONCRETE APRON - REFER TO STRUCTURAL DRAWINGS. SCORE CONTROL JOINTS AND PROVIDE 1/2" THICK EXPANSION JOINT AT 20'-0"± MAXIMUM (SEE STRUCTURAL AND CIVIL)
6. CONCRETE CURB AND GUTTER - REFER TO CIVIL DRAWINGS. EXTEND TO CONCRETE WALK
7. FUELING STATION - REFER TO SHEET A2.4.
8. BUILDING IDENTIFICATION SIGN - REFER TO DETAIL 1 SHEET A1.2
9. CONTINUOUS SECURITY FENCE AND GATE, TO BE INSTALLED.
10. TEMPORARY CONSTRUCTION FENCE - PROVIDE FENCE TO MAINTAIN SECURITY OF OWNERS EXISTING ADJACENT SITE.
11. CONCRETE SLAB FOR LPG TANK.
12. LPG TANK, BY OWNER, NOT IN CONTRACT.
13. PARKING SIGNAGE, REFER TO DETAIL 6 SHEET A1.2

DEMOLITION KEY NOTES:

D1 DEMO ANY EXISTING ASHPHALTIC CEMENT MATERIALS WITHIN THE LIMITS OF CONSTRUCTION.

D2 DEMO ANY EXISTING VEGETATION WITHIN THE LIMITS OF CONSTRUCTION, VERIFY WITH OWNER PRIOR TO REMOVAL.

D3 DEMO ANY EXISTING FENCE, STOCKPILES AND DEBRIS WITHIN THE LIMITS OF CONSTRUCTION.

GENERAL NOTES:

1. ALL DIMENSIONS ARE FROM BACK OF CURB, FACE OF MASONRY, PROPERTY LINE OR METAL WALL PANEL.
2. ALL SITE IMPROVEMENTS ADJACENT TO PROPERTY LINE SHALL EXTEND TO PROPERTY LINE OR TO SECURITY FENCE - REFER TO TYPICAL FENCE DETAILS SHEET A1.3
3. REFER TO CIVIL DRAWINGS FOR DIMENSION CONTROL PLAN AND DIMENSION CONTROL COORDINATES.
4. REFER TO CIVIL DRAWINGS FOR EROSION CONTROL PLAN.
5. REFER TO CIVIL DRAWINGS FOR GRADING PLAN.
6. REFER TO CIVIL DRAWINGS FOR UTILITY PLAN.
7. CONTRACTOR TO VERIFY BENCHMARKS LOCATION AND ELEVATION W/ ENGINEER PRIOR TO CONSTRUCTION.

SITE PLAN LEGEND:

- ASPHALT PAVING AND BASE AS SCHEDULED FOR BIDDING UNDER THIS CONTRACT.
- LANDSCAPING AND IRRIGATION SYSTEM AS SPECIFIED
- REINFORCED CONCRETE PAVING / WALK - REFER TO DETAILS ON SHEET C5.1

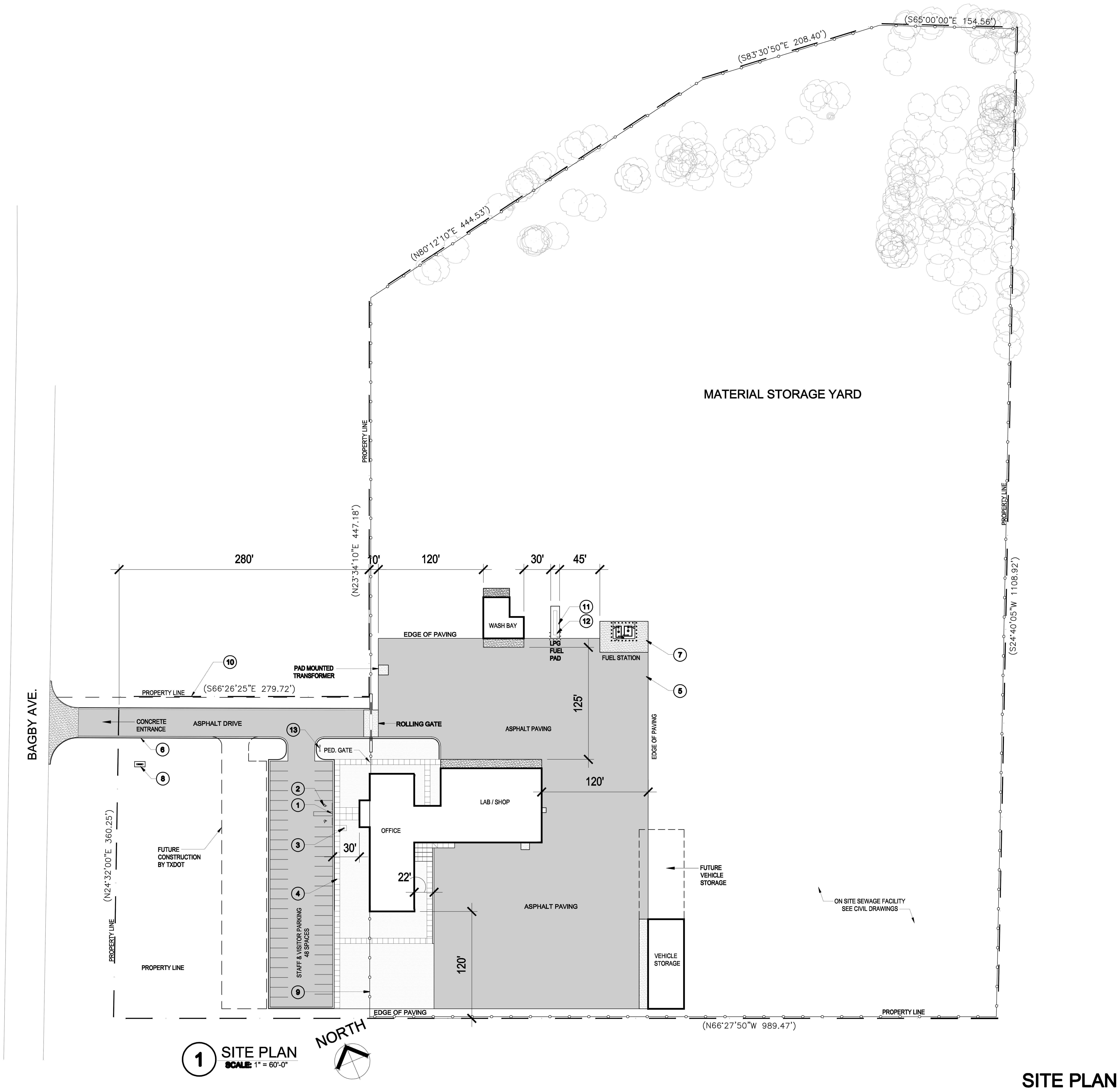

1 SITE PLAN
SCALE: 1" = 60'-0"

CADFILE: T:\MNTFM\DO2FTWC\BC4704-00-537\02-77-4704\00537\Acad\prototypical pdfs\waco\Acad\Arch\0672_A1_0.dwg Plotted: Fri, Aug. 07, 2009 @ 12:44 PM By: MBAZAN

Texas Department of Transportation
125 E. 11th Street
Austin, Texas 78701-2483
(512) 416-2646
Copyright © 2005 Texas Department of Transportation

THIS DOCUMENT IS RELEASED FOR THE PURPOSE OF INFORMATION ONLY
NOT FOR REGULATORY APPROVAL, PERMITTING, OR CONSTRUCTION.

WACO AREA ENGINEER AND MAINTENANCE FACILITY
WACO, MCLENNAN COUNTY
WACO DISTRICT

Revisions

Drawn by: KAO/EE
Project No. CBC4704-00672
Date 05.21.2007
Sheet No.
A1.0
of 37 sheets

SITE PLAN

NOTE: THIS DRAWING WAS CREATED FOR PRODUCTION ON 22" x 34" SHEET SIZE. DO NOT SCALE PRINTS.

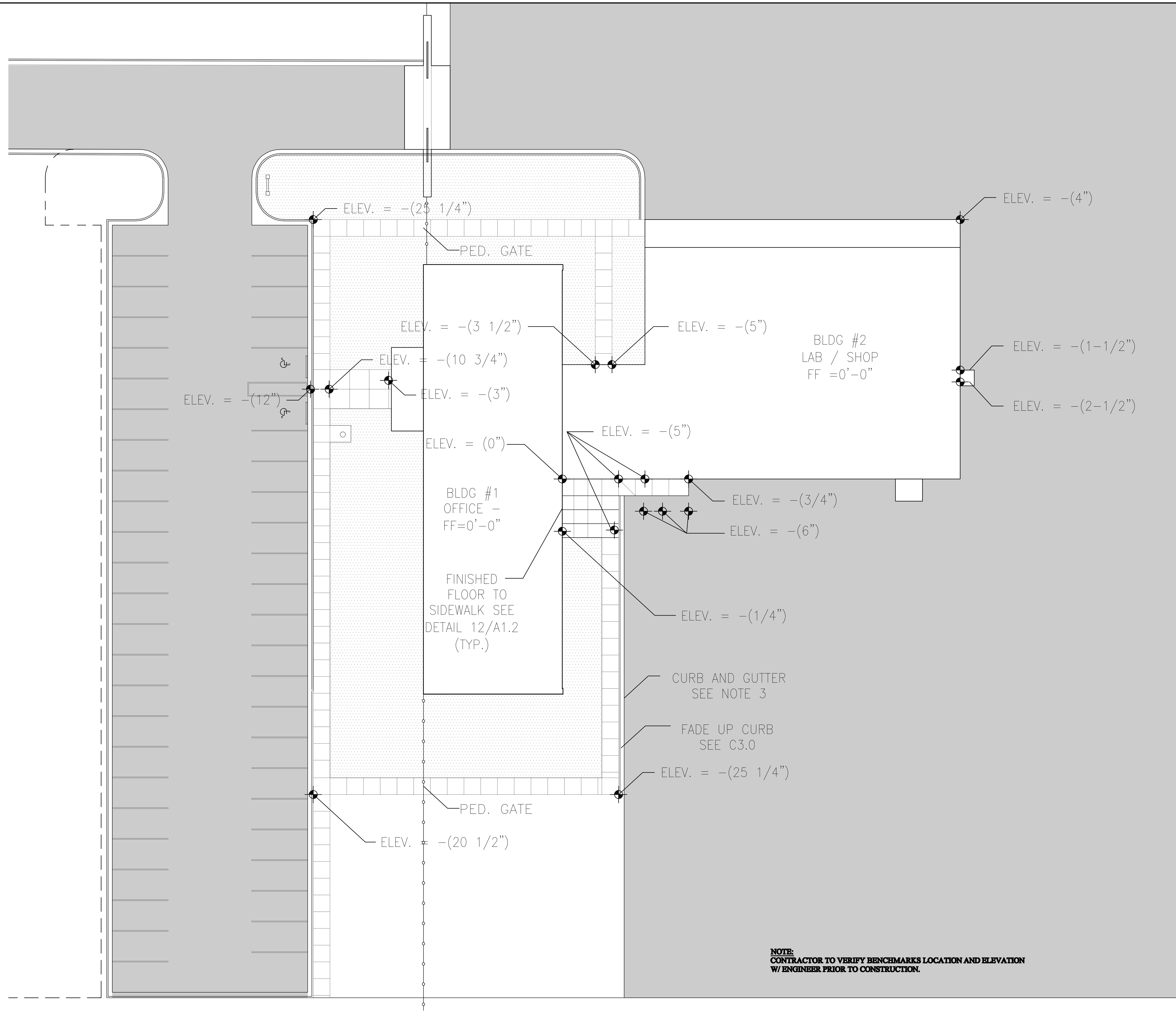

NOTE:
CONTRACTOR TO VERIFY BENCHMARKS LOCATION AND ELEVATION W/ ENGINEER PRIOR TO CONSTRUCTION.

NORTH

1 SITE SPOT ELEVATIONS PLAN
SCALE: 1" = 20'

NOTES

1. REFER TO CIVIL DRAWINGS FOR DIMENSION CONTROL PLAN AND DIMENSION CONTROL COORDINATES.
2. REFER TO CIVIL DRAWINGS FOR EROSION CONTROL PLAN.
3. REFER TO CIVIL DRAWINGS FOR GRADING PLAN.
4. REFER TO CIVIL DRAWINGS FOR UTILITY PLAN.
5. ASSUMED FINISHED FLOOR ELEVATION = 0'-0" UNLESS NOTED OTHERWISE. SEE CIVIL DWGS. FOR ACTUAL ELEVATION

SITE SPOT ELEVATIONS PLAN

NOTE: THIS DRAWING WAS CREATED FOR PRODUCTION ON 22" x 34" SHEET SIZE. DO NOT SCALE PRINTS.

Texas Department of Transportation
125 E. 11th Street
Austin, Texas 78701-2483
(512) 416-2840
Copyright © 2005 Texas Department of Transportation

THIS DOCUMENT IS RELEASED FOR THE PURPOSE OF INFORMATION ONLY
NOT FOR REGULATORY APPROVAL, PERMITTING, OR CONSTRUCTION.

WACO AREA ENGINEER AND MAINTENANCE FACILITY
WACO, MCLENNAN COUNTY
WACO DISTRICT

Revisions

Drawn by: KAO/EE
Project No. CBC4704-00672
Date 05.21.2007
Sheet No. A1.1
of 37 sheets

CADFILE: T:\MNTFM\D02FTW\CBC4704-00-837\02-77-47040\0837\Acad\prototypical pdf\waco\Acad\Arch\0672_A1_1.dwg Plotted: Fri, Aug. 07, 2009 @ 12:45 PM By: MBAZAN

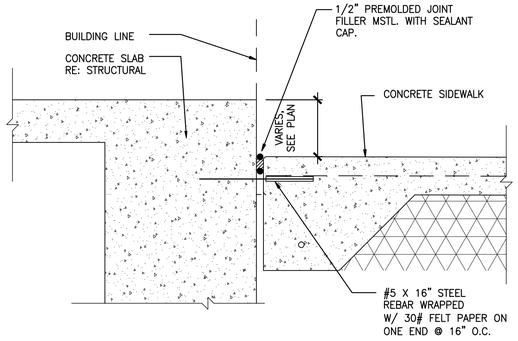

12 SIDEWALK AT BUILDING FOUNDATION
SCALE: N. T. S. (TYPICAL)

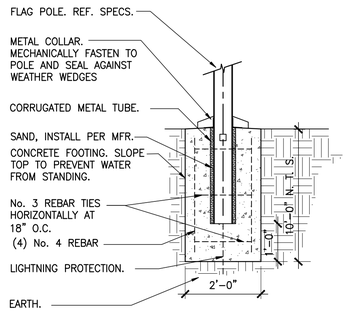

9 FLAG POLE BASE
SCALE: 1/2" = 1'-0"

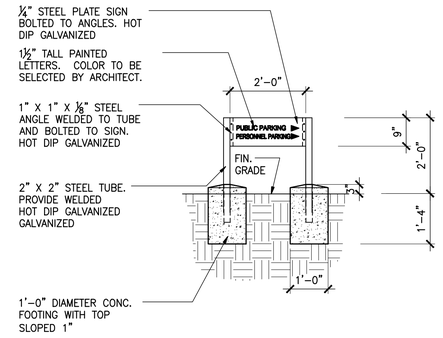

6 ENTRY SIGN ELEVATION
SCALE: 1/2" = 1'-0"

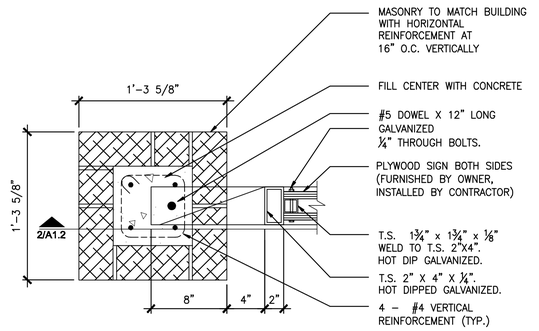

3 TXDOT SIGN PLAN VIEW
SCALE: 1/8" = 1'-0"

11 LIGHT POLE BASE
SCALE: 1/2" = 1'-0"

8 BOLLARD DETAIL
SCALE: 1/2" = 1'-0"

5 TXDOT SIGN SECTION
SCALE: 1/2" = 1'-0"

2 TXDOT SIGN SECTION
SCALE: 1/2" = 1'-0"

10 ACCESSIBLE SIGN
SCALE: 1/2" = 1'-0"

7 BOLLARD DETAIL
SCALE: 1/2" = 1'-0"

4 TXDOT SIGN ELEVATION
SCALE: 1/2" = 1'-0"

1 TXDOT SIGN ELEVATION
SCALE: 1/2" = 1'-0"

SITE DETAILS

THIS DOCUMENT IS RELEASED FOR THE PURPOSE OF
INFORMATION ONLY
NOT FOR REGULATORY
APPROVAL, PERMITTING,
OR CONSTRUCTION.

Texas Department of Transportation
125 E. 11th Street
Austin, Texas 78701-2483
(512) 416-3000
Copyright © 2005 Texas Department of Transportation

WACO AREA ENGINEER AND MAINTENANCE FACILITY
WACO, MCLENNAN COUNTY
WACO DISTRICT

Revisions

Drawn by: JOT
Project No. CBC4704-00672
Date 05.21.2007
Sheet No. A1.2
of 37 **sheets**

CADFILE: T:\MNTFM\2025FY\WCBC4704-00-857\02-77-4704008571\wacfpro\stypical pdf\sheets\Acad\Arch\10672_A1_2.dwg Plotted: Fri, Aug. 07, 2009 @ 12:30 PM By: MBAZAN

NOTE: THIS DRAWING WAS CREATED FOR PRODUCTION ON 22" x 34" SHEET SIZE. DO NOT SCALE PRINTS.

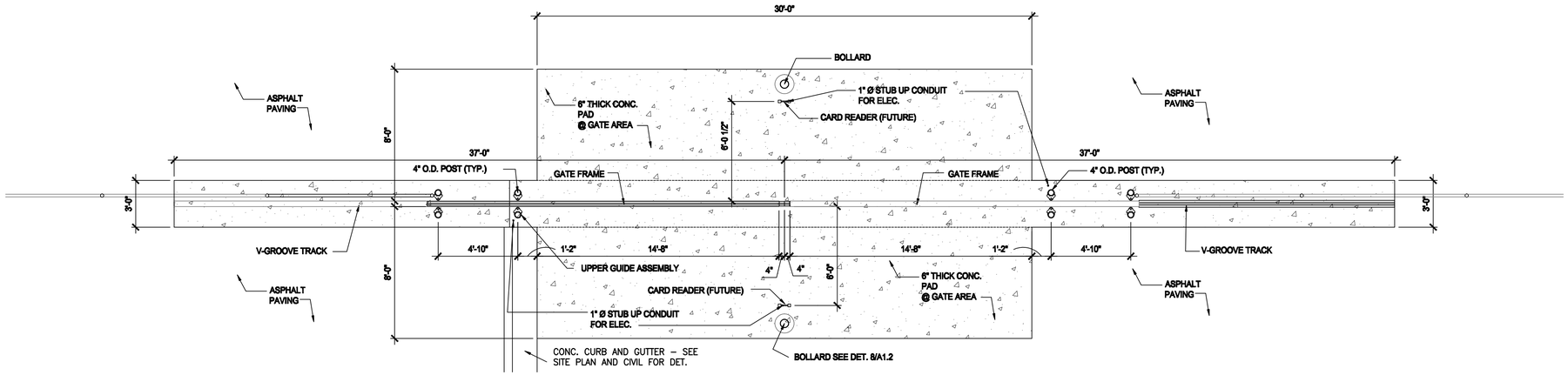

1 PLAN @ SECURITY GATE
SCALE: 1/4" = 1'-0"

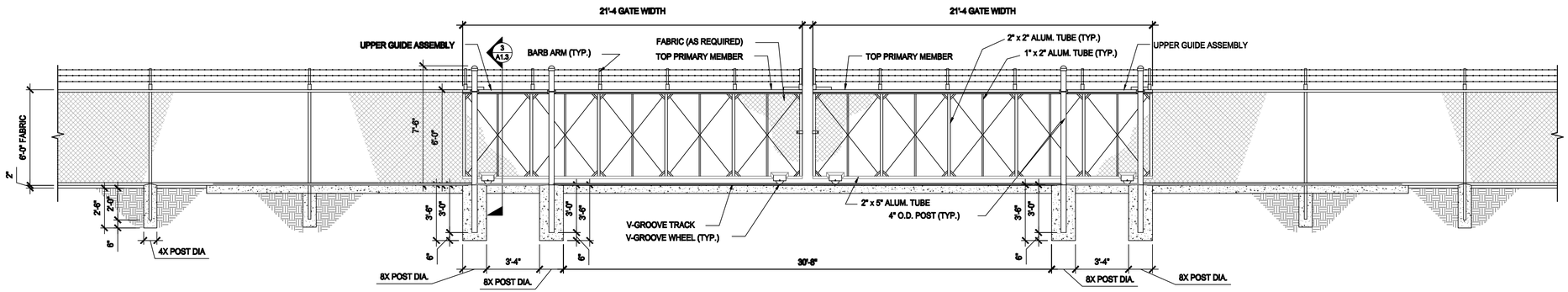

2 STANDARD ROLLING SECURITY GATE
SCALE: 1/4" = 1'-0"

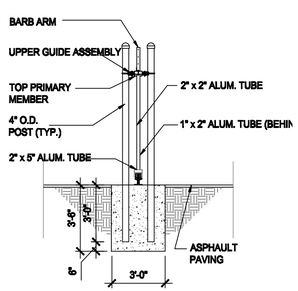

3 GATE SECTION
SCALE: 1/4" = 1'-0"

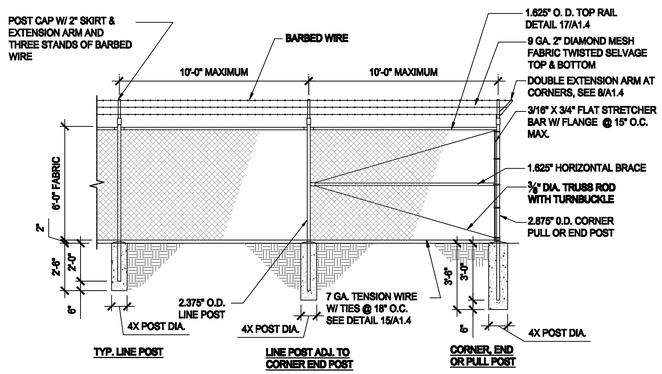

4 SECURITY FENCING WITH BARBED WIRE
SCALE: 1/4" = 1'-0"

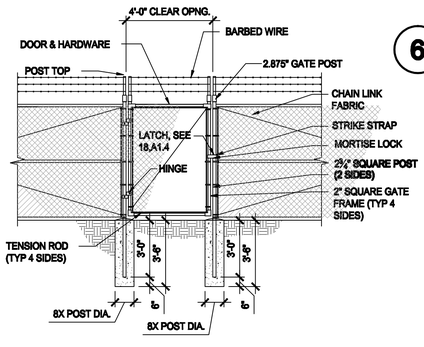

5 PEDESTRIAN GATE
SCALE: 1/4" = 1'-0"

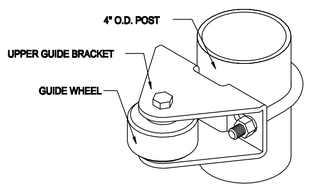

6 UPPER GUIDE ASSEMBLY
SCALE: 1/2" = 1'-0"

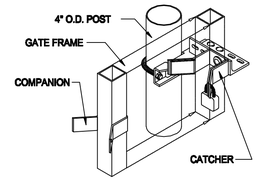

7 CATCH ASSEMBLY
SCALE: 1/2" = 1'-0"

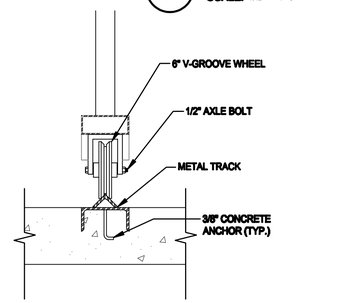

8 V-GROOVE WHEEL ASSEMBLY
SCALE: 1/2" = 1'-0"

GATE & FENCE DETAILS

NOTE: THIS DRAWING WAS CREATED FOR PRODUCTION ON 22" x 34" SHEET SIZE. DO NOT SCALE PRINTS.

CADFILE: T:\NHT\PWD\DFTWC\BC4704-00-83\02-77-4704008377\Acad\prots\plotsl pdf#seed=Acad\Arch\0572_A1_3.dwg Plotted: Fri, Aug. 07, 2009 @ 12:47 PM By: MBAZAN

Texas Department of Transportation
125 E. 11th Street
Austin, Texas 78701-2483
(512) 416-2000

Copyright © 2005 Texas Department of Transportation

THIS DOCUMENT IS RELEASED FOR THE PURPOSE OF
INFORMATION ONLY
NOT FOR REGULATORY
APPROVAL, PERMITTING,
OR CONSTRUCTION.

WACO AREA ENGINEER AND MAINTENANCE FACILITY
WACO, MCLENNAN COUNTY
WACO DISTRICT

Revisions

Drawn by: KAO/EE
Project No. CBC4704-00672
Date 05.21.2007
Sheet No.

A1.3
of 37 sheets

BUILDING CODE:
2006 INTERNATIONAL BUILDING CODE

OCCUPANCY CLASSIFICATION & SEPARATION

CLASS	DESCRIPTION	SEPARATION – SEC. 302.3.2 & TABLE 302.3.2	
B	OFFICE AREAS	B TO S1	3 HOUR
S1	GENERAL MATERIAL STORAGE		
S2	GENERAL MATERIAL STORAGE	B TO S2	2 HOUR

OPENINGS IN THIS FIRE BARRIER ARE REQUIRED TO BE PROTECTED WITH 3 HOUR FIRE ASSEMBLIES. -- TABLE 715.3

NOTE: STORAGE AREAS LESS THAN 1000 SQUARE FEET NEED NOT BE SEPARATED. – TABLE 302.3.2

NOTE: STORAGE AREAS LARGER THAN 100 SQUARE FEET ARE REQUIRED TO BE 1 HOUR SEPARATION. – TABLE 302.1.1

PROPERTY DESCRIPTION

NORTH SIDE HAS A PROPERTY LINE. - DISTANCE TO PROPERTY LINE = 200'
EAST SIDE HAS A PROPERTY LINE. - DISTANCE TO PROPERTY LINE = 150'
SOUTH SIDE HAS A PROPERTY LINE. - DISTANCE TO PROPERTY LINE = 200'
WEST SIDE HAS A PROPERTY LINE. - DISTANCE TO PROPERTY LINE = 300'

CONSTRUCTION TYPE: IIB

ALLOWABLE FLOOR AREA:

1. ASSUME A PROPERTY LINE BETWEEN BUILDINGS AND TREAT EACH BUILDING SEPARATELY.
2. DUE TO SEPARATION FRONTAGE, ALLOWABLE AREA MAY BE INCREASED 50%

BUILDING 1 & 2:

OCCUPANCY	BASIC ALLOWABLE AREA (S.F.)	ACTUAL AREA (S.F.)		RATIO OF ACTUAL S.F. TO ALLOWABLE AREA
B	23,000	9,716		0.42
S1	17,500	2,658		0.15
S2	26,000	766		0.02
	20,250	17,140	TOTAL LESS THAN 1	0.59

OCCUPANCY LOAD FACTORS:

DESCRIPTION		OCCUPANTS LOAD	MIN. EXITS	CORRIDOR RATING	DOOR SWING
BUILDING 1 & 2: Section 1014					
B	MAIN OFFICE	35	1	N/A	OUT
B	MAIN OFFICE	46	1	N/A	OUT
S1	GENERAL STORAGE	13	1	N/A	N/R
S2	SHOP STOR/STOCK RM	3	1	N/A	N/R
S1	EQUIP. STORAGE	14	1	N/A	OUT

EXIT ACCESS TRAVEL DISTANCE:

1. THE MAXIMUM TRAVEL DISTANCE IN GROUP B IS 200 FEET. – TABLE 1015.1
2. THE MAXIMUM TRAVEL DISTANCE IN GROUP S1 IS 200 FEET. – TABLE 1015.1

NOTES:

1 MINIMUM WIDTH OF EXITS' 0.2 INCH / OCCUPANT
2 AREAS WITH 'AC' BEFORE THE NUMBER OF OCCUPANTS IS BEING TREATED AS AN ACCESSORY USE AREA.

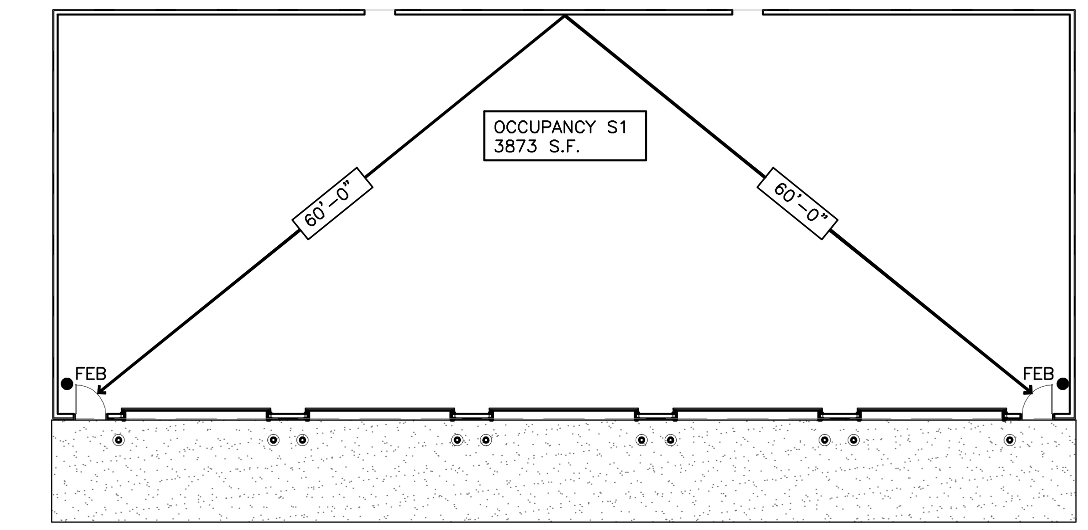

2 FLOOR PLAN - VEHICLE STORAGE
SCALE: 1/16" = 1'-0"

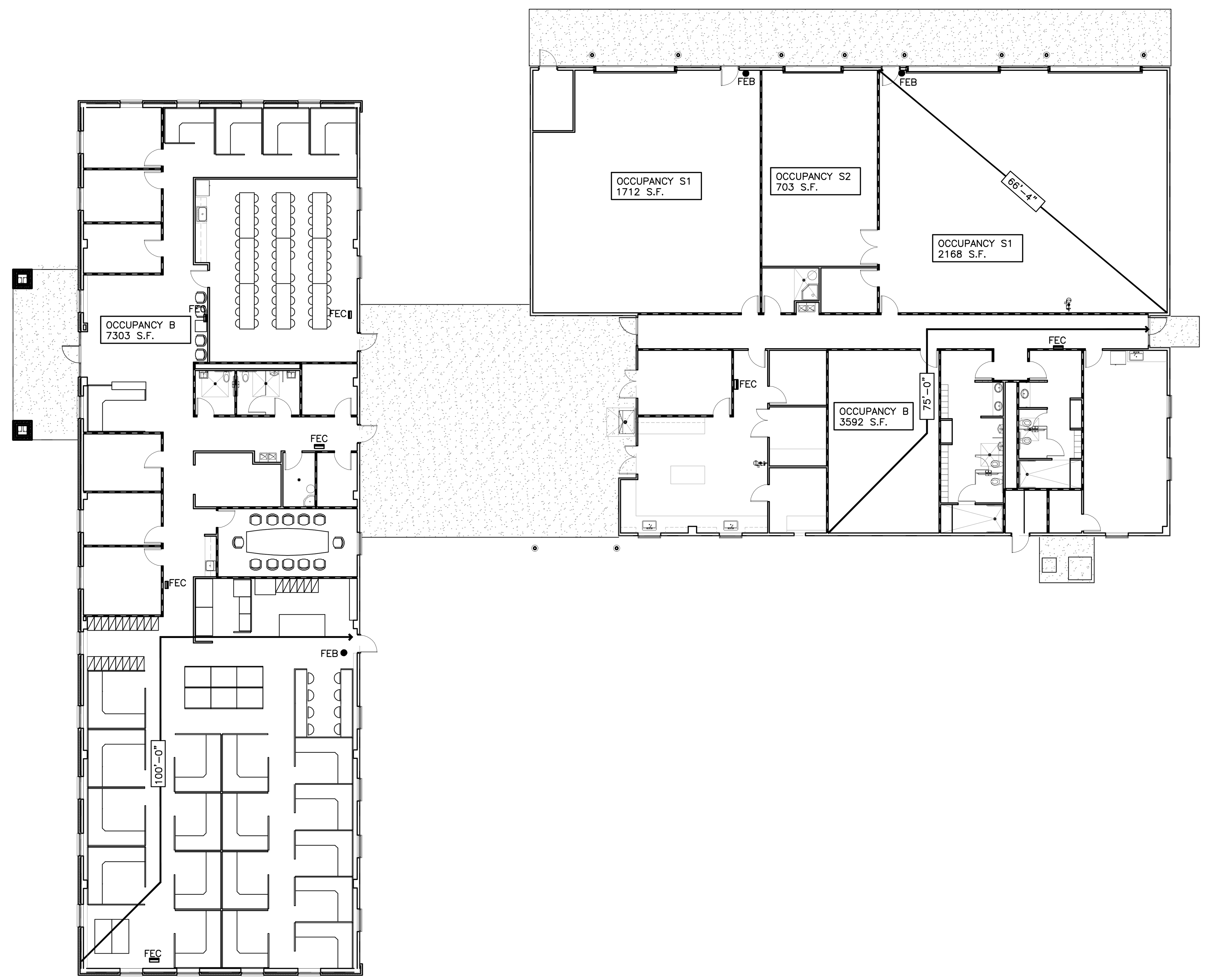

1 FLOOR PLAN - OFFICE BUILDING / LAB/ SHOP
SCALE: 1/16" = 1'-0"
FURNITURE SHOWN FOR REFERENCE ONLY (NIC)

LEGEND

	WALL
	1 HOUR FIRE RESISTIVE ASSEMBLY RATING WALL WITH 20 MINUTE DOORS AND 5/8" TYPE "X" GYP. WALL BD. AND/OR 5/8" ABUSE RESISTANT WALL PANELS 8' HIGH
→	TRAVEL DISTANCE
FEC	FIRE EXTINGUISHER CABINET
FEB	FIRE EXTINGUISHER WITH BRACKETS

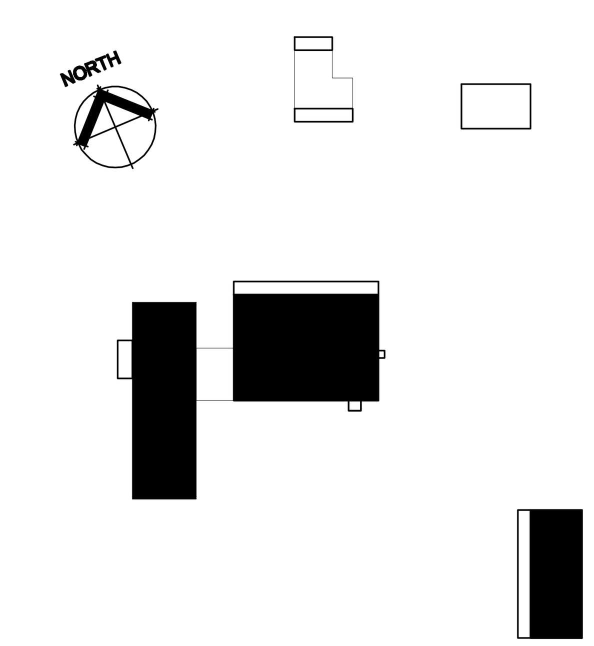

KEY PLAN

CODE COMPLIANCE PLAN

Texas Department of Transportation
125 E. 11th Street
Austin, Texas 78701-2483
(512) 416-2040
Copyright © 2005 Texas Department of Transportation

THIS DOCUMENT IS RELEASED FOR THE PURPOSE OF INFORMATION ONLY
NOT FOR REGULATORY APPROVAL, PERMITTING, OR CONSTRUCTION.

WACO AREA ENGINEER AND MAINTENANCE FACILITY
WACO, MCLENNAN COUNTY
WACO DISTRICT

Revisions

Drawn by: KAO/EE
Project No. CBC4704-00672
Date 05.21.2007
Sheet No.
A2.0
of 37 sheets

NOTE: THIS DRAWING WAS CREATED FOR PRODUCTION ON 22" x 34" SHEET SIZE. DO NOT SCALE PRINTS.

Plotted: Fri, Aug. 07, 2009 @ 12:50 PM By: MBAZAN

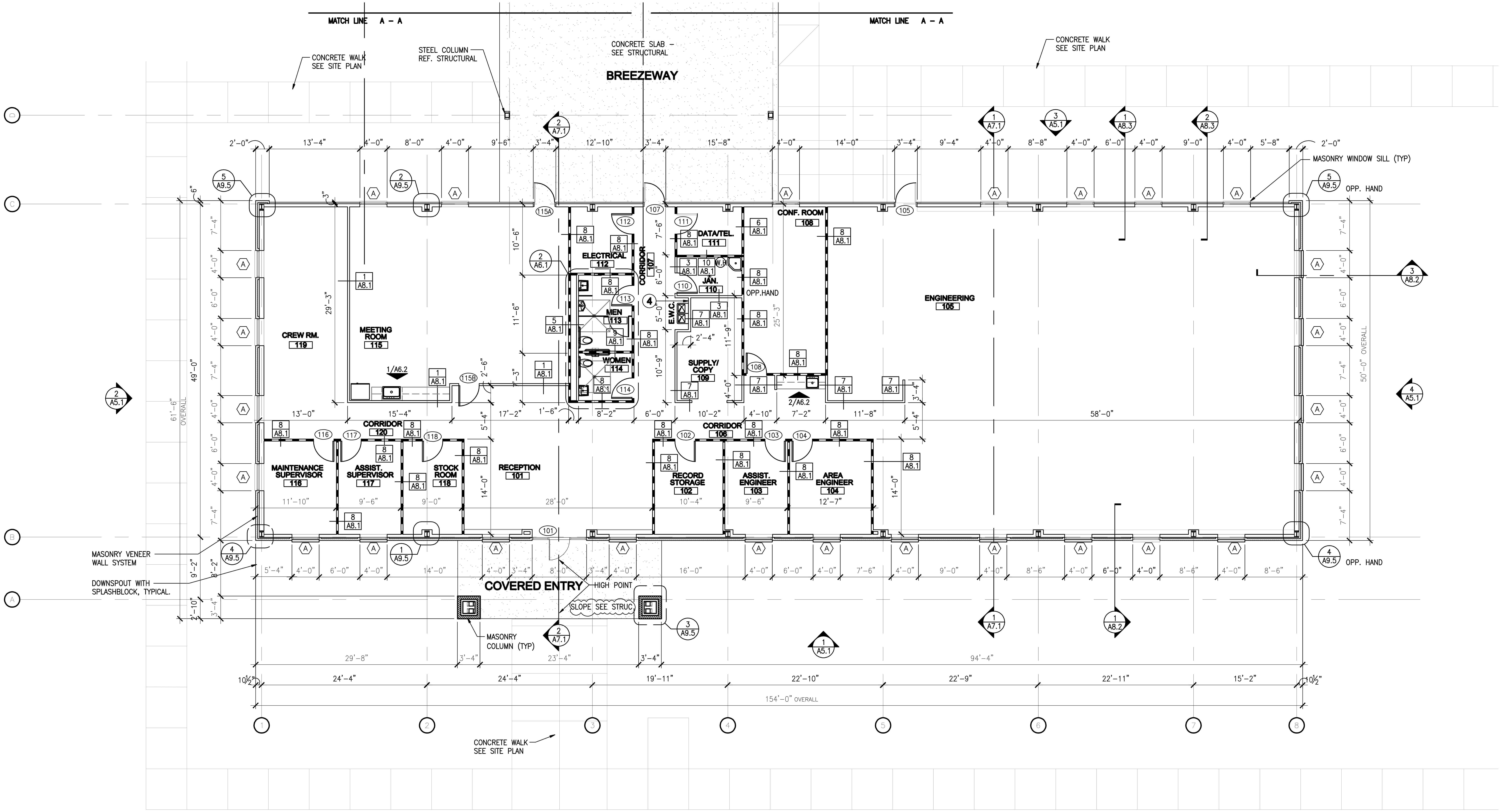

1 FLOOR PLAN - OFFICE BUILDING

SCALE: 1/8" = 1'-0"

GENERAL NOTES:

1. DIMENSIONS ARE FROM FACE OF STUD TO EXTERIOR FACE OF MASONRY OR METAL PANEL.
2. DIMENSIONS OF MASONRY ARE NOMINAL ON PLANS AND ACTUAL OF DETAILS.
3. SEE SHEET G1.1 FOR SYMBOLS DESCRIPTIONS.
4. APPLY FRP FULL HEIGHT TO ALL THREE SIDES OF ELEC. WATER COOLER ALCOVES AND INSTALL CORNER GUARDS AT OUTSIDE CORNERS.

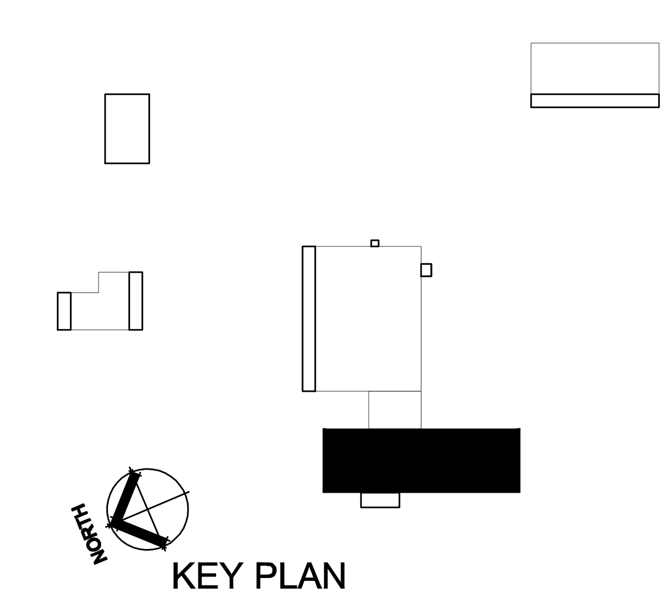

KEY PLAN

FLOOR PLAN - OFFICE

Texas Department of Transportation
125 E. 11th Street
Austin, Texas 78701-2483
(512) 416-2040
Copyright © 2005 Texas Department of Transportation

THIS DOCUMENT IS RELEASED FOR THE PURPOSE OF INFORMATION ONLY
NOT FOR REGULATORY APPROVAL, PERMITTING, OR CONSTRUCTION.

WACO AREA ENGINEER AND MAINTENANCE FACILITY
WACO, MCLENNAN COUNTY
WACO DISTRICT

Revisions
△ 08/29/07
△
△
△

Drawn by: KAO/EE
Project No. CBC4704-00672
Date 05.21.2007
Sheet No. A2.1
of 37 sheets

NOTE: THIS DRAWING WAS CREATED FOR PRODUCTION ON 22" x 34" SHEET SIZE. DO NOT SCALE PRINTS.

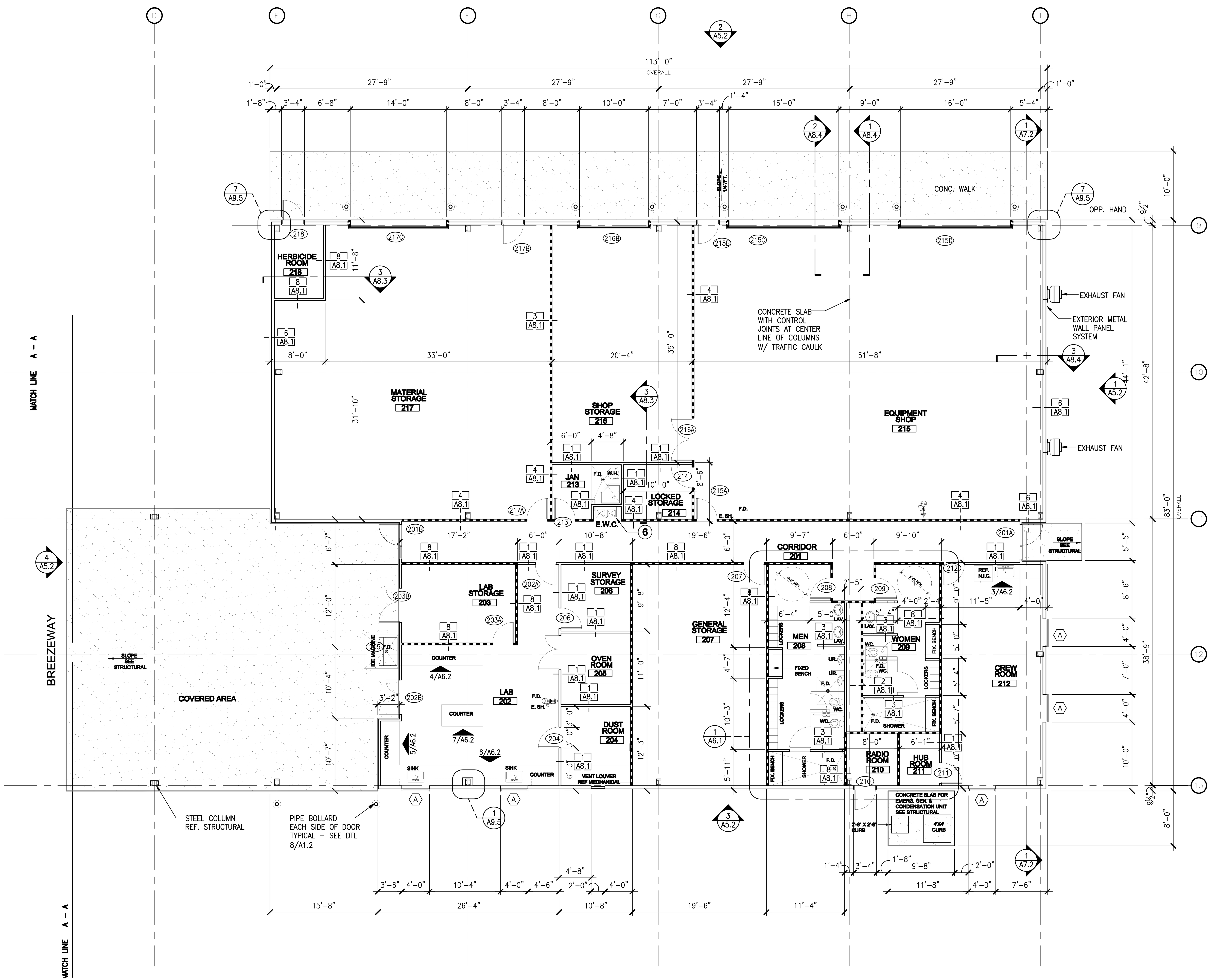

1 FLOOR PLAN - LAB / SHOP BUILDING
SCALE: 1/8" = 1'-0"

GENERAL NOTES:

1. DIMENSIONS ARE FROM FACE OF STUD TO EXTERIOR FACE OF MASONRY OR METAL PANEL.
2. DIMENSIONS OF MASONRY ARE NOMINAL ON PLANS AND ACTUAL OF DETAILS.
3. SEE SHEET G1.1 FOR SYMBOLS DESCRIPTIONS.

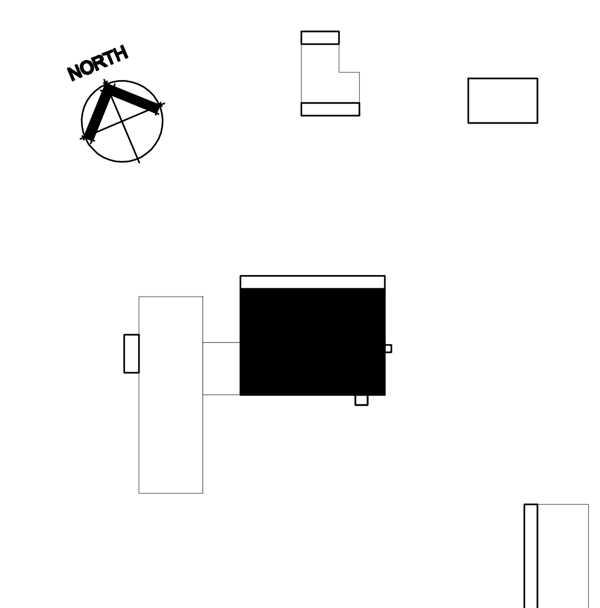

KEY PLAN

FLOOR PLAN - LAB / SHOP

Texas Department of Transportation
125 E. 11th Street
Austin, Texas 78701-2483
(512) 416-3848

Copyright © 2005 Texas Department of Transportation

THIS DOCUMENT IS RELEASED FOR THE PURPOSE OF INFORMATION ONLY
NOT FOR REGULATORY APPROVAL, PERMITTING, OR CONSTRUCTION.

WACO AREA ENGINEER AND MAINTENANCE FACILITY
WACO, MCLENNAN COUNTY WACO DISTRICT

Revisions

Drawn by: KAO/EE
Project No. CBC4704-00672
Date 05.21.2007
Sheet No.
A2.2
of 37 sheets

NOTE: THIS DRAWING WAS CREATED FOR PRODUCTION ON 22" x 34" SHEET SIZE. DO NOT SCALE PRINTS.

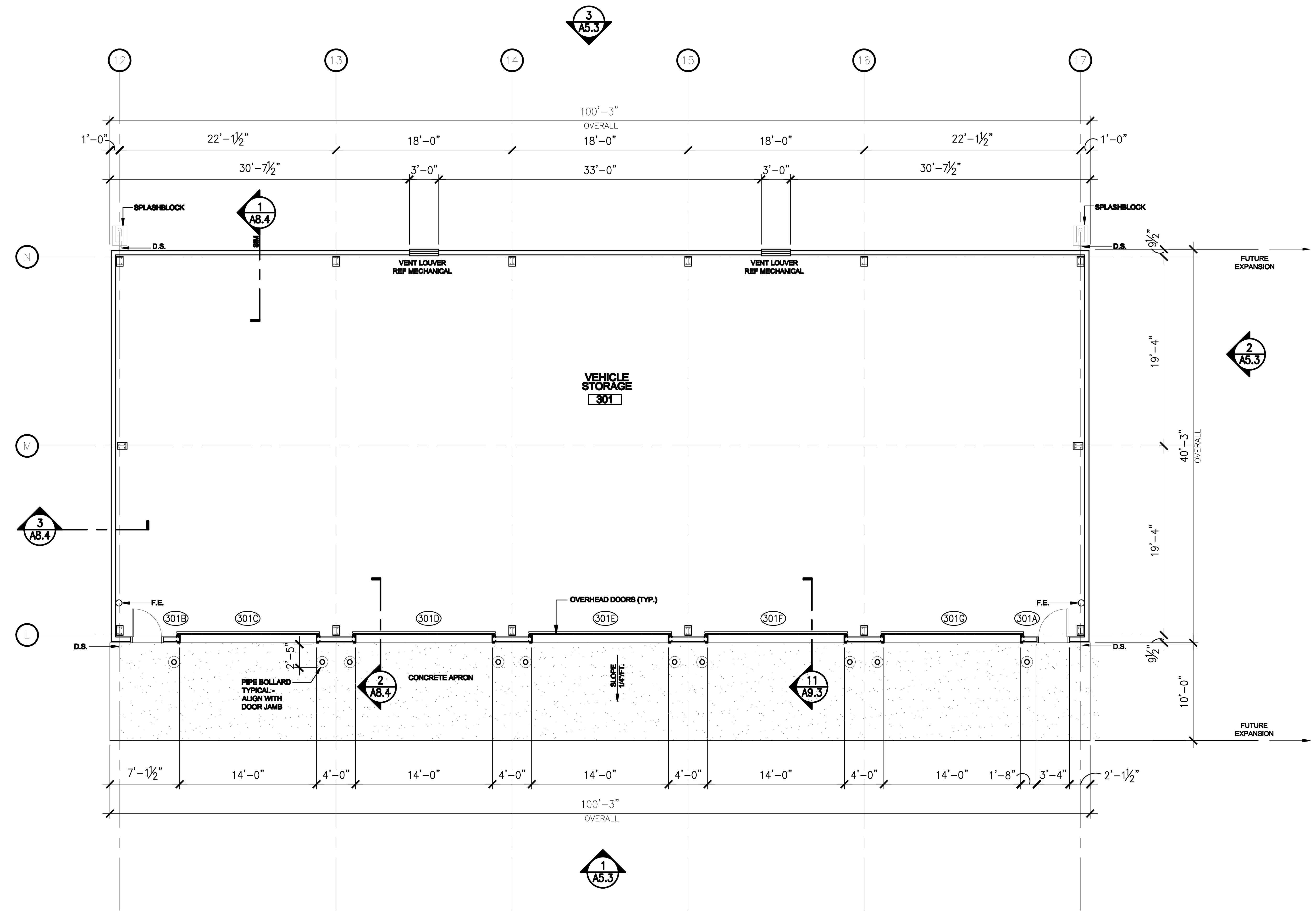

1 FLOOR PLAN - VEHICLE STORAGE BUILDING
SCALE: 1/8" = 1'-0"

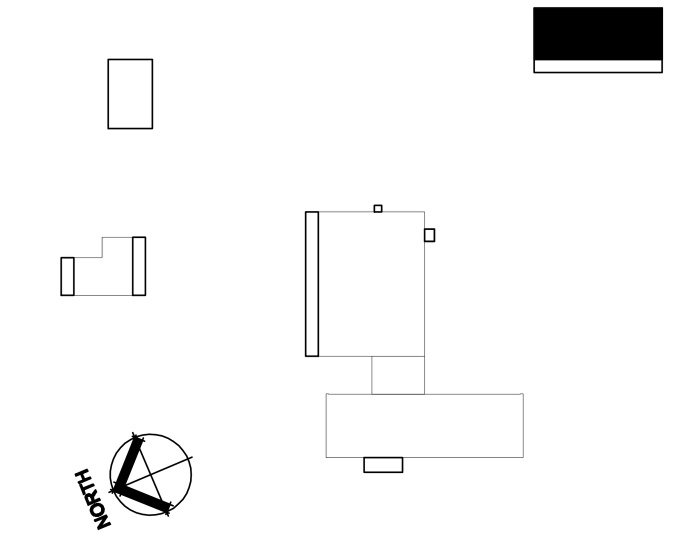

KEY PLAN

Texas Department of Transportation
125 E. 11th Street
Austin, Texas 78701-2483
(512) 416-2046
Copyright © 2005 Texas Department of Transportation

THIS DOCUMENT IS RELEASED FOR THE PURPOSE OF INFORMATION ONLY
NOT FOR REGULATORY APPROVAL, PERMITTING, OR CONSTRUCTION.

WACO AREA ENGINEER AND MAINTENANCE FACILITY
WACO, MCLENNAN COUNTY
WACO DISTRICT

Revisions

Drawn by: KAO/EE
Project No. CBC4704-00672
Date 05.21.2007
Sheet No.
A2.3
of 37 sheets

FLOOR PLAN - VEHICLE STORAGE

NOTE: THIS DRAWING WAS CREATED FOR PRODUCTION ON 22" x 34" SHEET SIZE. DO NOT SCALE PRINTS.

Plotted: Fri, Aug. 07, 2009 @ 12:52 PM By: MBAZAN

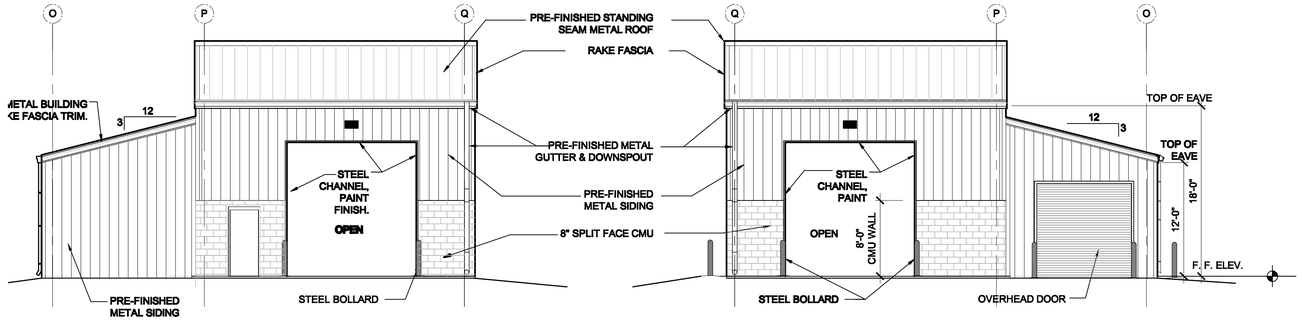

3 SOUTH ELEVATION
SCALE: 1/8"=1'-0"

2 NORTH ELEVATION
SCALE: 1/8"=1'-0"

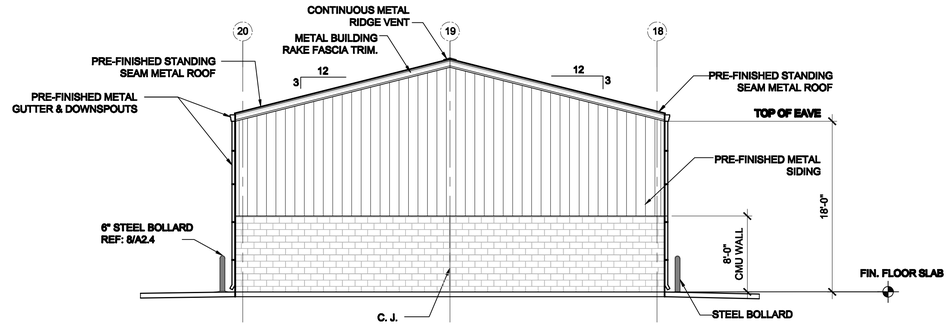

4 EAST ELEVATION
SCALE: 1/8"=1'-0"

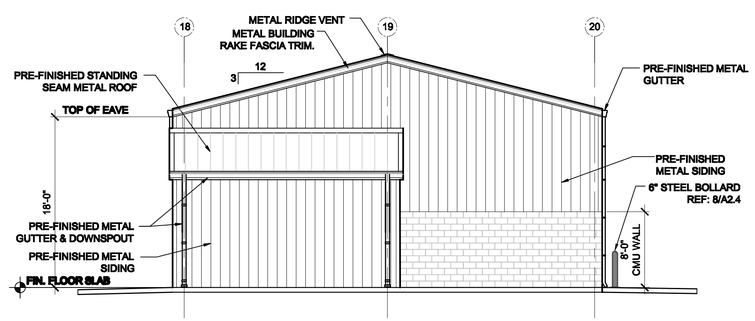

5 WEST ELEVATION
SCALE: 1/8"=1'-0"

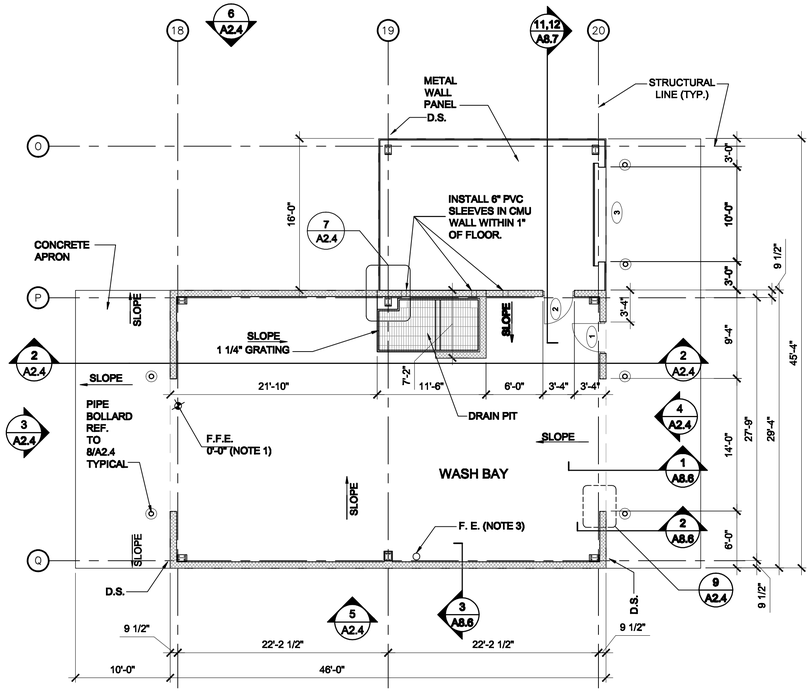

1 FLOOR PLAN
SCALE: 1/8"=1'-0"

NOTE:
1. SET FINISHED FLOOR ELEVATION (F.F.E.) 6" ABOVE HIGHEST FINIISHED GRADE POINT AT PERIMETER OF NEW BUILDING.
2. LT. BROOM FIN. ON CONCRETE
3. FIRE EXT. EQUAL TO LARSEN 'MP10' ABC TYPE W/ WALL BRACKET & MEETS NFPA 10.

NORTH

FLOOR PLAN / ELEVATIONS - WASH BAY

NOTE: THIS DRAWING WAS CREATED FOR PRODUCTION ON 22" x 34" SHEET SIZE. DO NOT SCALE PRINTS.

Texas Department of Transportation
125 E. 11th Street
Austin, Texas 78701-2483
(512) 416-3000

Copyright © 2005 Texas Department of Transportation

THIS DOCUMENT IS RELEASED FOR THE PURPOSE OF
INFORMATION ONLY
NOT FOR REGULATORY
APPROVAL, PERMITTING,
OR CONSTRUCTION.

WACO AREA ENGINEER AND MAINTENANCE FACILITY
WACO, MCLENNAN COUNTY
WACO DISTRICT

Revisions

Drawn by:
KAO/EE
Project No.
CBC4704-00672
Date
05.21.2007
Sheet No.
A2.4
of 37 sheets

CADFILE: T:\MAINTRAD\D25FTW\CBC4704-00-697\03-77-4704006377\Acad\print\dgn\plot pdf\texas\Axis\Arch\D672_A2_4.dwg Plotted: Fri, Aug. 07, 2009 @ 12:22 PM By: MBAZAN

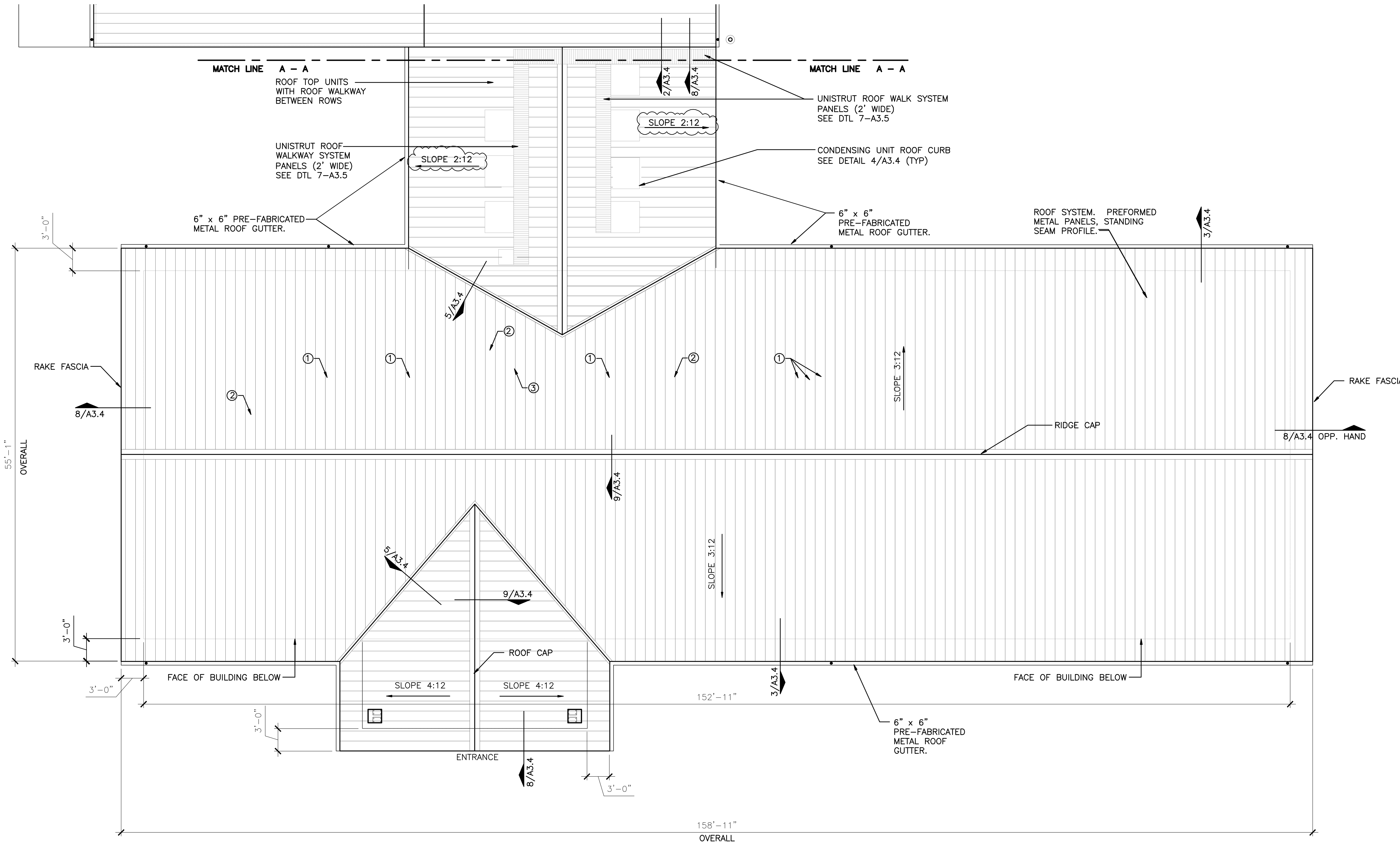

1 ROOF PLAN - OFFICE BUILDING
SCALE: 1/8" = 1'-0"

NOTES:
1 - VENTS THRU ROOF ARE FOR ARCH. AND MEP COORDINATION. CONTRACTOR SHALL VERIFY LOCATION & QUANTITY W/ MECHANICAL CONTRACTOR
2 - ALL THRU ROOF VENTS TO BE LOCATED ON OPPOSITE SIDE OF RIDGE FROM ENTRY

NOTES:
① OUTSIDE AIR INTAKE – SEE DETAIL 10&11/A3.4
② PLUMBING VENT – SEE DETAIL 1/A3.4
③ EXHAUST JACK – SEE DETAIL 4/A3.4

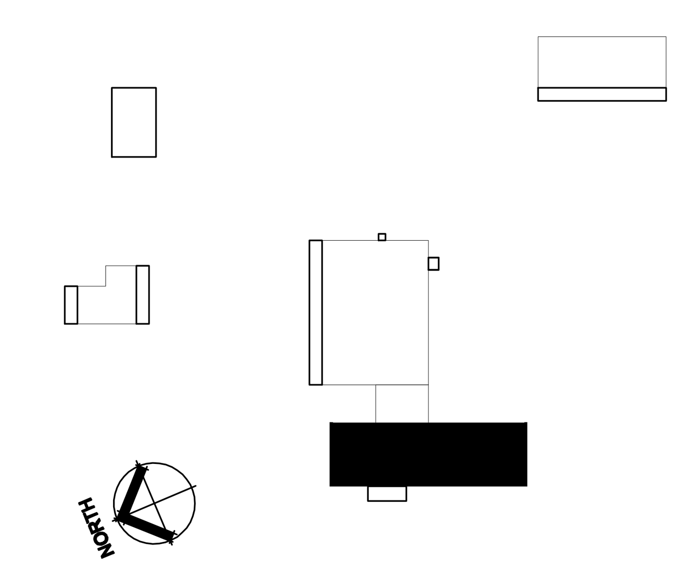

KEY PLAN

ROOF PLAN - OFFICE

Texas Department of Transportation
125 E. 11th Street
Austin, Texas 78701-2483
(512) 416-2848

Copyright © 2005 Texas Department of Transportation

THIS DOCUMENT IS RELEASED FOR THE PURPOSE OF INFORMATION ONLY
NOT FOR REGULATORY APPROVAL, PERMITTING, OR CONSTRUCTION.

WACO AREA ENGINEER AND MAINTENANCE FACILITY
WACO, MCLENNAN COUNTY WACO DISTRICT

Revisions
△ 08/29/07
△
△
△

Drawn by: KAO/EE
Project No. CBC4704-00672
Date 05.21.2007
Sheet No.
A3.1
of 37 sheets

NOTE: THIS DRAWING WAS CREATED FOR PRODUCTION ON 22" x 34" SHEET SIZE. DO NOT SCALE PRINTS.

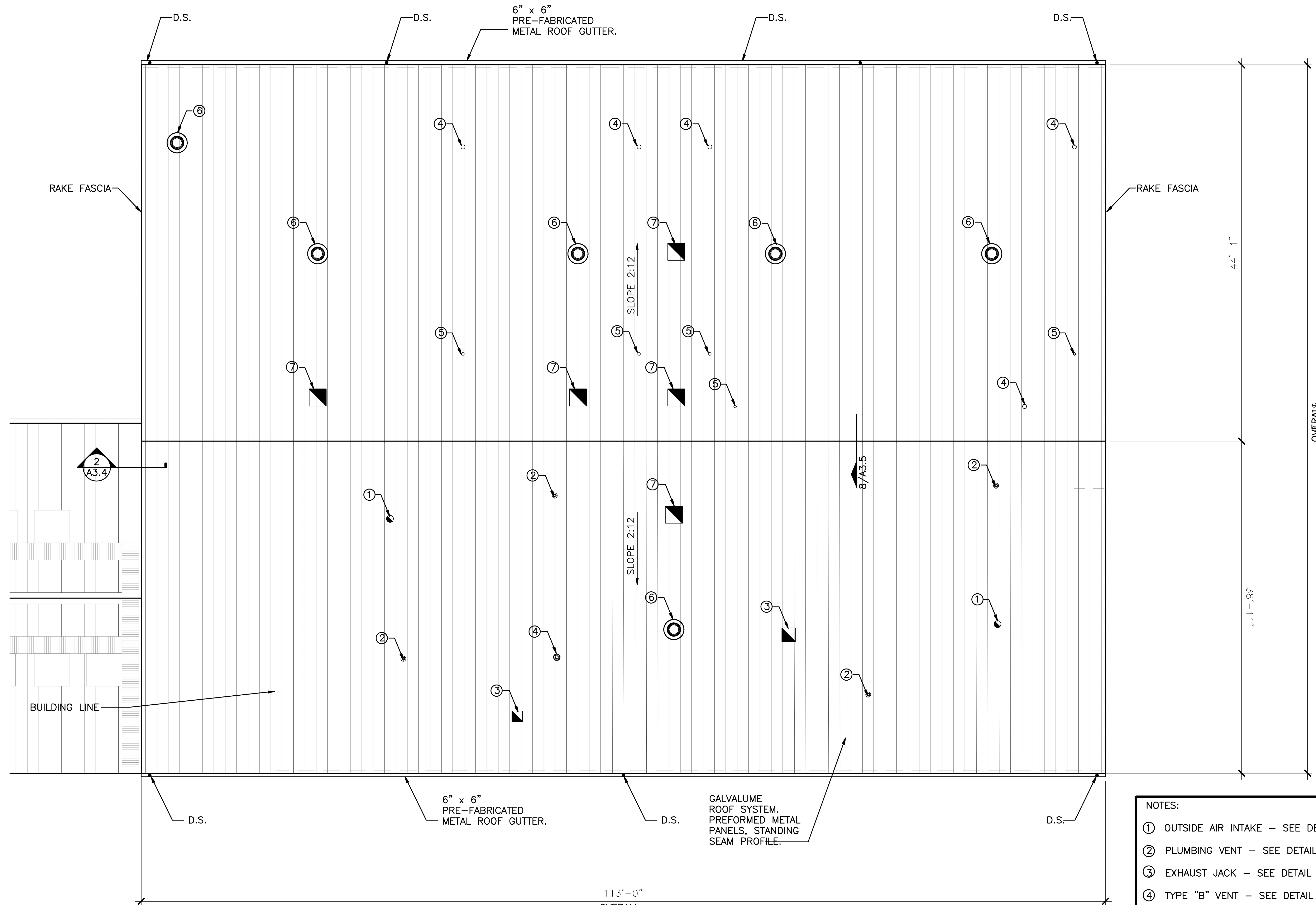

NOTES:

1. OUTSIDE AIR INTAKE – SEE DETAIL 10&11/A3.4
2. PLUMBING VENT – SEE DETAIL 1/A3.4
3. EXHAUST JACK – SEE DETAIL 4/A3.4
4. TYPE "B" VENT – SEE DETAIL 1/M5.3
5. COMBUSTION AIR VENT – SEE DETAIL 1/M5.3
6. EXHAUST FAN – SEE DETAIL 4/A3.4
7. INTAKE HOOD – SEE DETAIL 4/A3.4

1 ROOF PLAN - SHOP/LAB BUILDING

SCALE: 1/8" = 1'-0"

NOTE: VENTS THRU ROOF ARE FOR ARCH. AND MEP COORDINATION. CONTRACTOR SHALL VERIFY LOCATION & QUANTITY W/ MECHANICAL CONTRACTOR

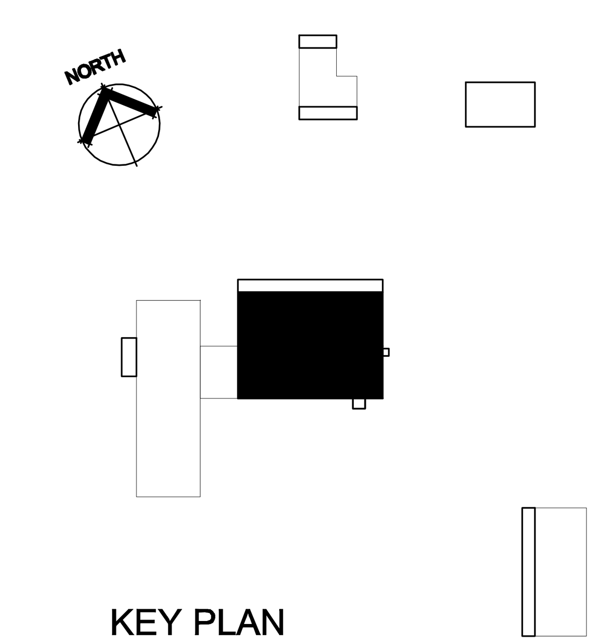

KEY PLAN

Texas Department of Transportation
125 E. 11th Street
Austin, Texas 78701-2483
(512) 416-3040

Copyright © 2005 Texas Department of Transportation

THIS DOCUMENT IS RELEASED FOR THE PURPOSE OF INFORMATION ONLY NOT FOR REGULATORY APPROVAL, PERMITTING, OR CONSTRUCTION.

WACO AREA ENGINEER AND MAINTENANCE FACILITY

WACO, MCLENNAN COUNTY WACO DISTRICT

Revisions

Drawn by: KAO/EE

Project No. CBC4704-00672

Date 05.21.2007

Sheet No. A3.2 of 37 sheets

ROOF PLAN - LAB/SHOP

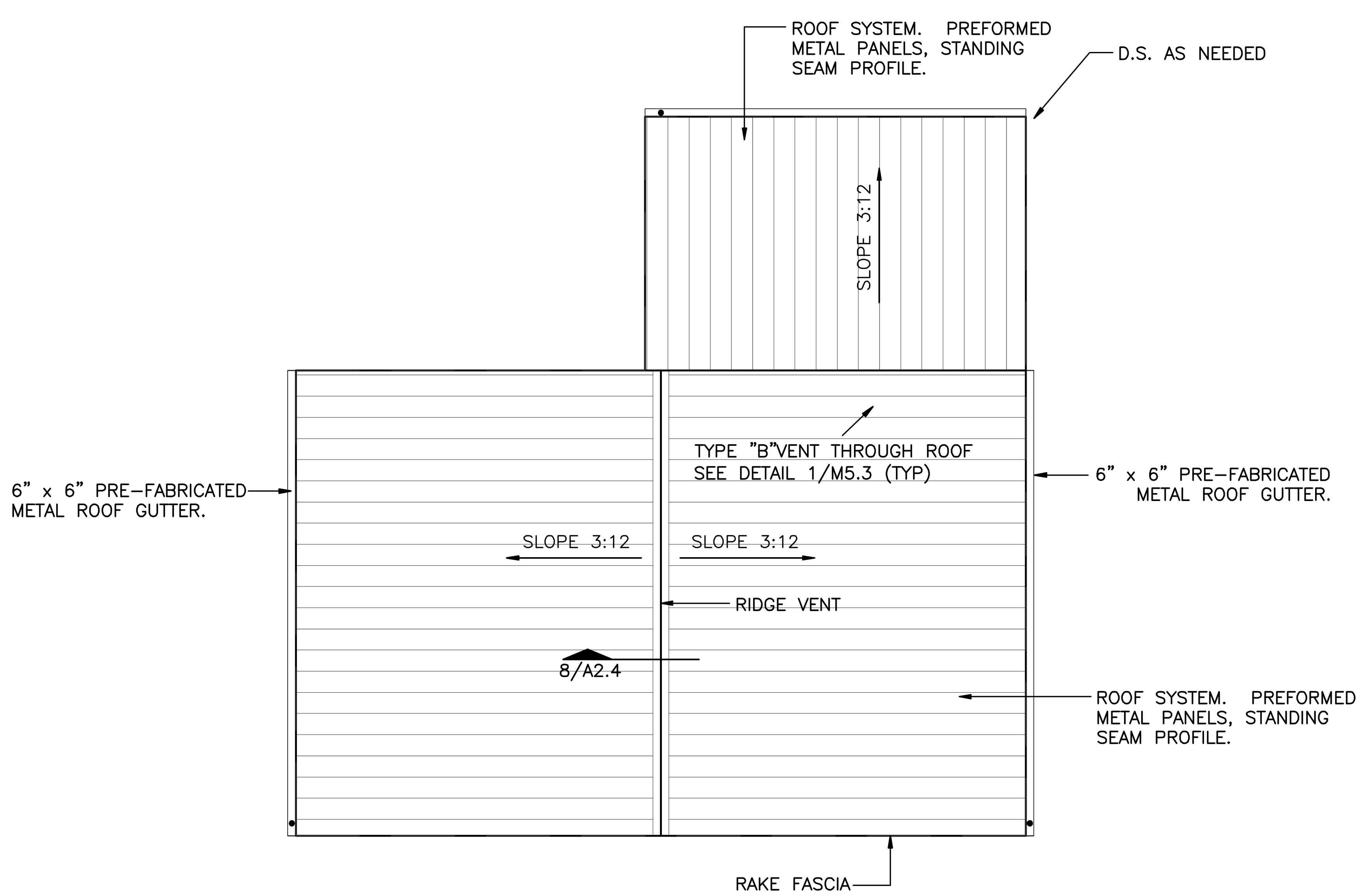

1 **ROOF PLAN - WASH BAY**
SCALE: 1/8" = 1'-0"

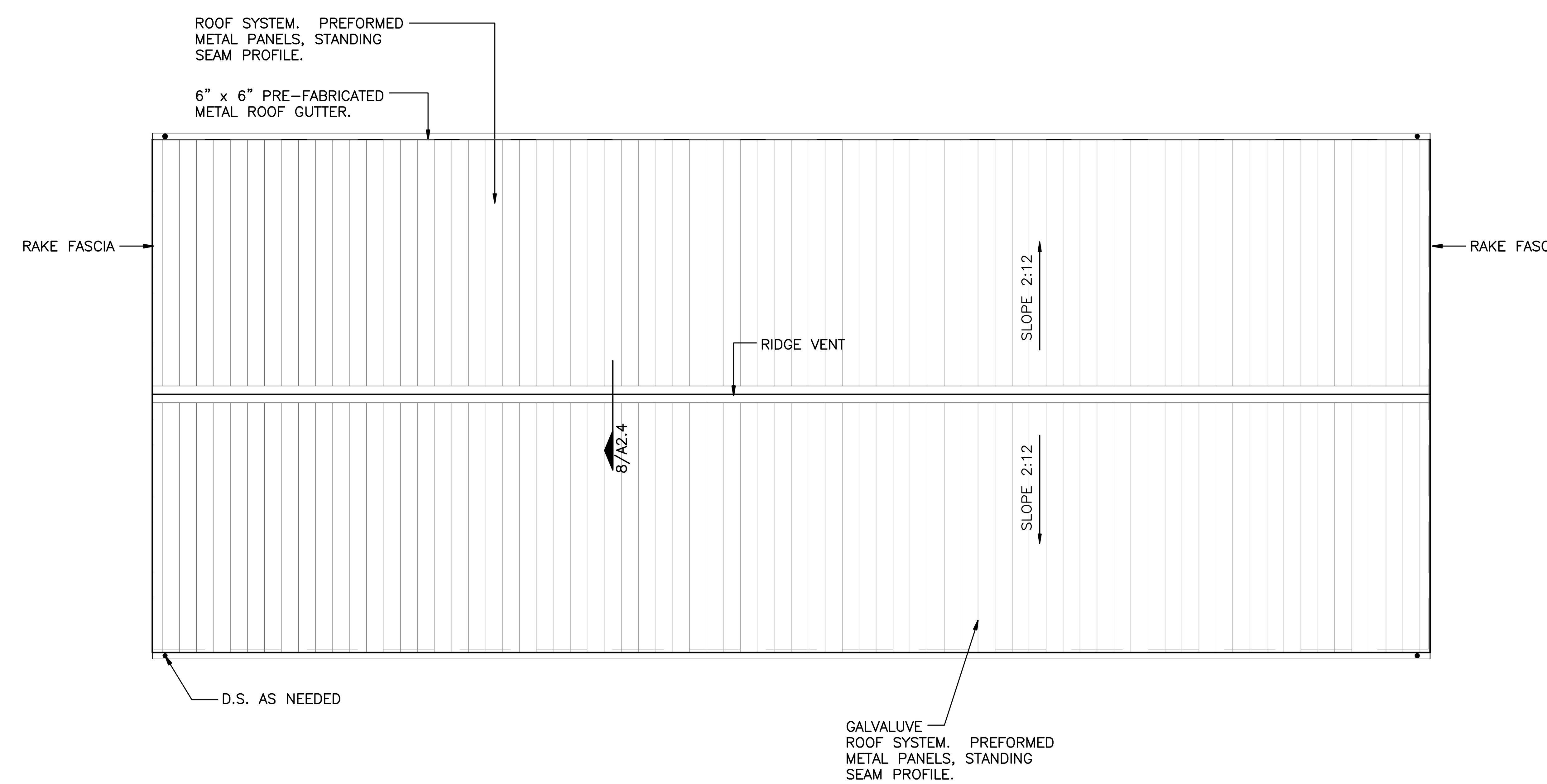

2 **ROOF PLAN - VEHICLE STORAGE**
SCALE: 1/8" = 1'-0"

NOTE: VENTS THRU ROOF ARE FOR ARCH. AND MEP COORDINATION. CONTRACTOR SHALL VERIFY LOCATION & QUANTITY W/ MECHANICAL CONTRACTOR

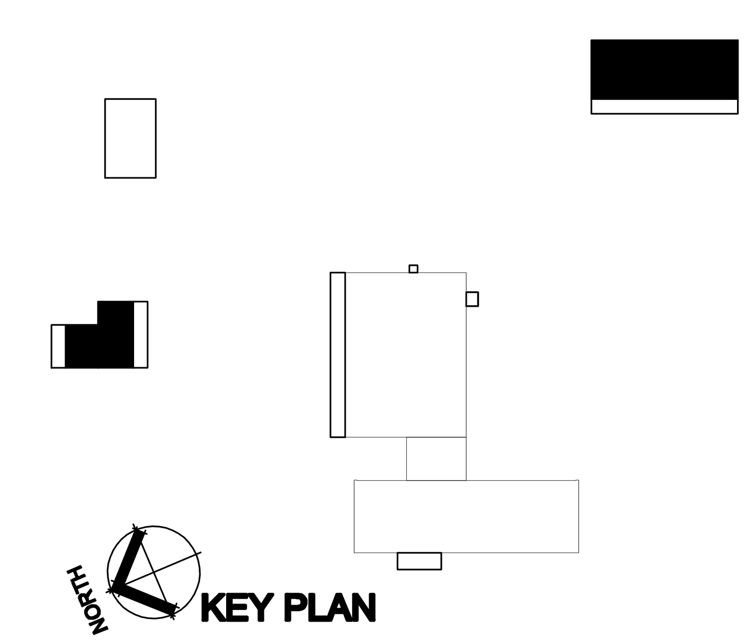

KEY PLAN

ROOF PLAN - WASH BAY & VEHICLE STORAGE BUILDINGS

Texas Department of Transportation
125 E. 11th Street
Austin, Texas 78701-2483
(512) 416-3048

Copyright © 2005 Texas Department of Transportation

THIS DOCUMENT IS RELEASED FOR THE PURPOSE OF INFORMATION ONLY
NOT FOR REGULATORY APPROVAL, PERMITTING, OR CONSTRUCTION.

WACO AREA ENGINEER AND MAINTENANCE FACILITY
WACO, MCLENNAN COUNTY
WACO DISTRICT

Revisions

Drawn by: KAO/EE
Project No. CBC4704-00672
Date 05.21.2007
Sheet No. A3.3
of 37 sheets

NOTE: THIS DRAWING WAS CREATED FOR PRODUCTION ON 22" x 34" SHEET SIZE. DO NOT SCALE PRINTS.

CADFILE: T:\MNTFMD\02FTWCBC4704-00-837\02-77-4704008371\Acad\prototypical pdfs\waco\Acad\Arch\0672_A3_3.dwg Plotted: Fri, Aug. 07, 2009 @ 12:54 PM By: MBAZAN

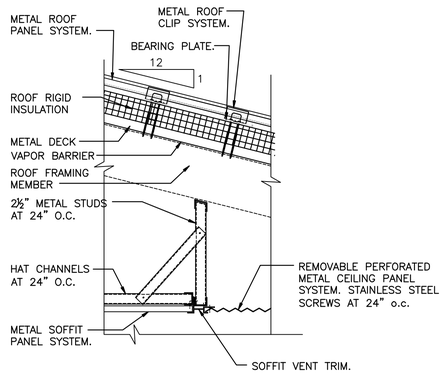

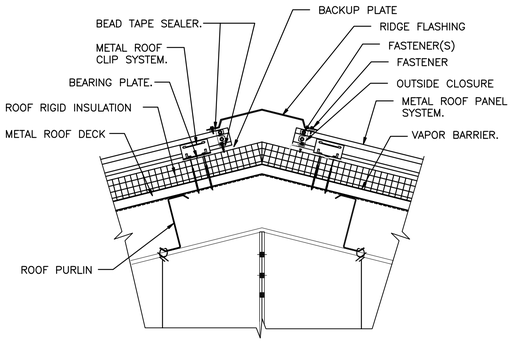

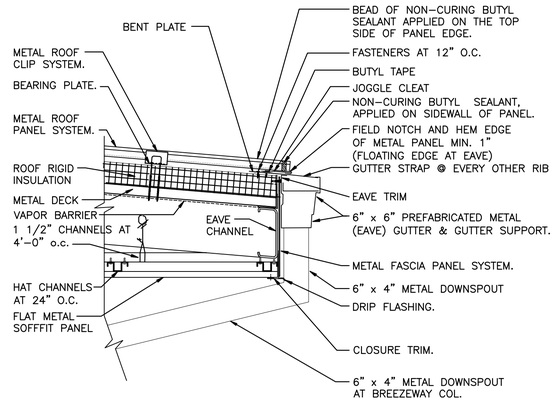

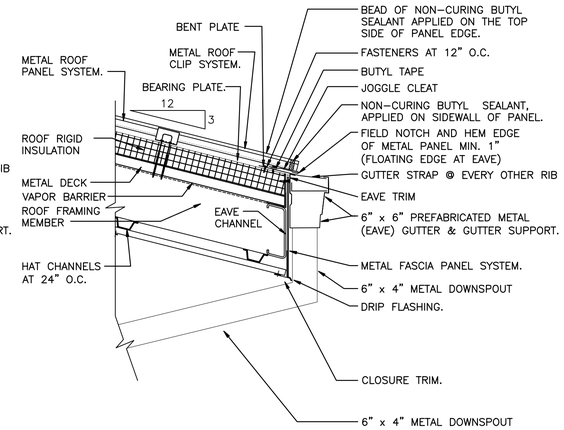

12 REMOVABLE PANEL DETAIL
SCALE: 1" = 1'-0"

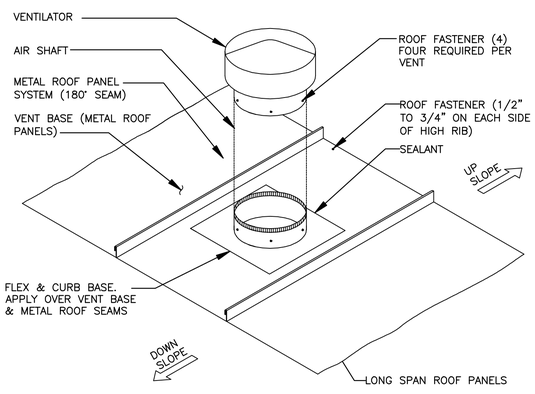

9 RIDGE CAP DETAIL
SCALE: 1" = 1'-0"

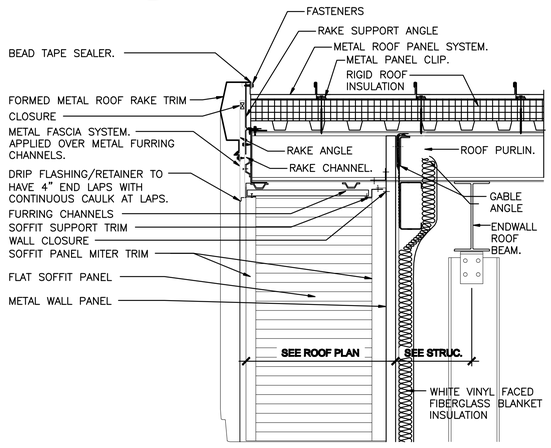

6 EAVE DETAIL
SCALE: 1" = 1'-0"

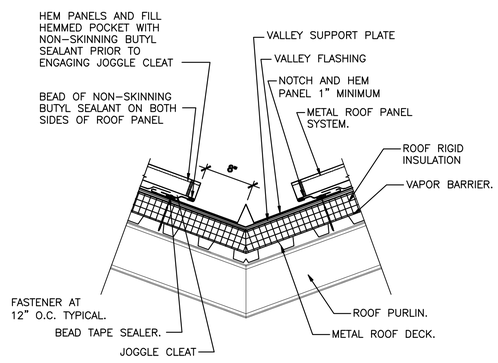

3 EAVE DETAIL
SCALE: 1" = 1'-0"

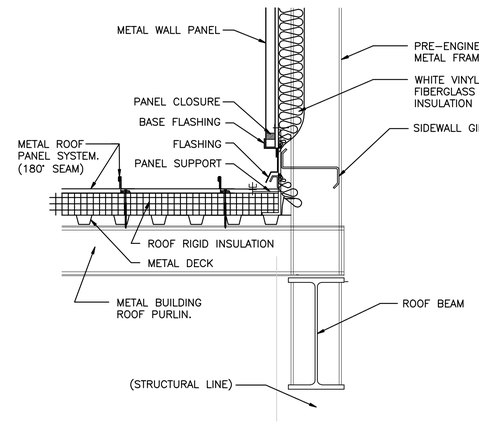

11 DETAIL - OUTSIDE AIR INTAKE
SCALE: N.T.S.

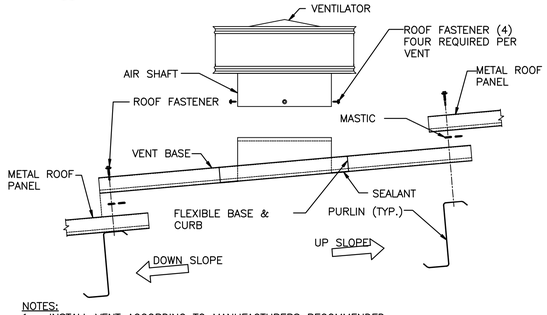

NOTES:
1. INSTALL VENT ACCORDING TO MANUFACTURERS RECOMMENDED INSTALLATION PROCEDURES.
2. SEAL ALL CONNECTIONS WITH GUTTER SEAL TO INSURE WEATHER TIGHTNESS.
3. TAPE MASTIC SIZE SHALL BE THE SAME AS FURNISHED FOR ROOF PANELS.

8 RAKE DETAIL
SCALE: 1" = 1'-0"

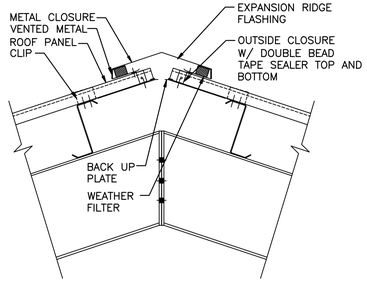

5 VALLEY DETAIL
SCALE: 1" = 1'-0"

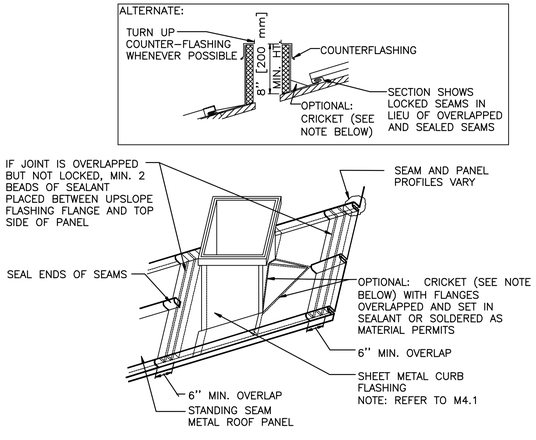

2 FLASHING DETAIL AT ROOF
SCALE: 1" = 1'-0"

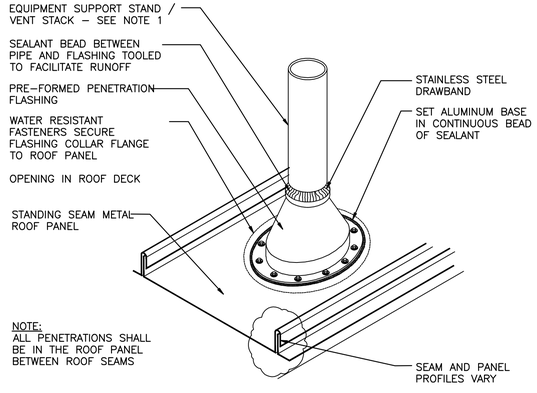

10 SECTION - OUTSDE AIR INTAKE
SCALE: N.T.S.

7 RIDGE VENT DETAIL
SCALE: N.T.S

4 CURB DETAIL (BY ROOF MFG.)
SCALE: N.T.S.

1 VTR (VENT THROUGH ROOF) DETAIL
SCALE: N.T.S.

ROOF DETAILS

NOTE: THIS DRAWING WAS CREATED FOR PRODUCTION ON 22" x 34" SHEET SIZE. DO NOT SCALE PRINTS.

Texas Department of Transportation
125 E. 11th Street
Austin, Texas 78701-2483
(512) 416-2000

Copyright © 2005 Texas Department of Transportation

THIS DOCUMENT IS RELEASED FOR THE PURPOSE OF INFORMATION ONLY NOT FOR REGULATORY APPROVAL, PERMITTING, OR CONSTRUCTION.

WACO AREA ENGINEER AND MAINTENANCE FACILITY
WACO, MCLENNAN COUNTY
WACO DISTRICT

Revisions

Drawn by: JOT
Project No. CBC4704-00672
Date 05.21.2007
Sheet No.

A3.4
of 37 sheets

CADFILE: T:\MAIT\M\200\FTW\CBC4704-00-83703-77-4704008372\sheets\proto\typical pdf\sheets\Asset\Arch\0372_A3_4.dwg Plotted: Fri, Aug. 07, 2009 @ 12:55 PM By: MBAZAN

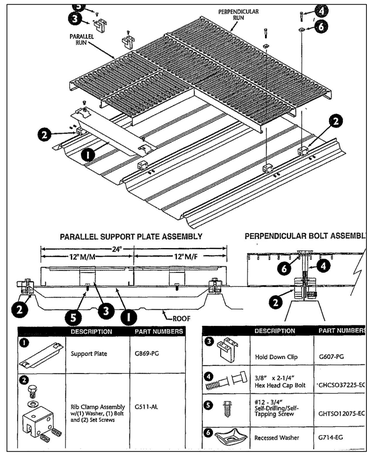

	DESCRIPTION	PART NUMBERS
1	Support Plate	G869-PG
2	Rib Clamp Assembly w/(1) Washer, (1) Bolt and (2) Set Screws	CS11-AL

	DESCRIPTION	PART NUMBERS
3	Hold Down Clip	G607-PG
4	3/8" x 2-1/4" Hex Head Cap Bolt	*CHCS037225-SC
5	#12 - 3/4" Self-Drilling/Self-Tapping Screw	CHTSO12075-EC
6	Recessed Washer	G714-EG

5 UNISTRUT ROOF WALWAYS (1-800-284-1412)
SCALE: N.T.S.

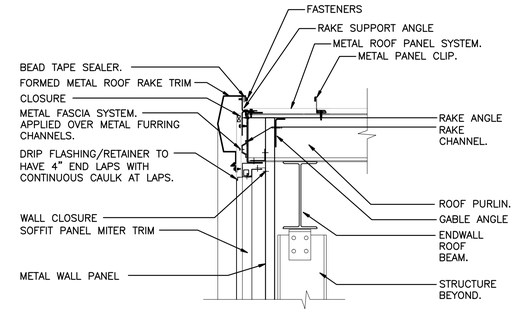

3 RAKE DETAIL
SCALE: 1" = 1'-0"

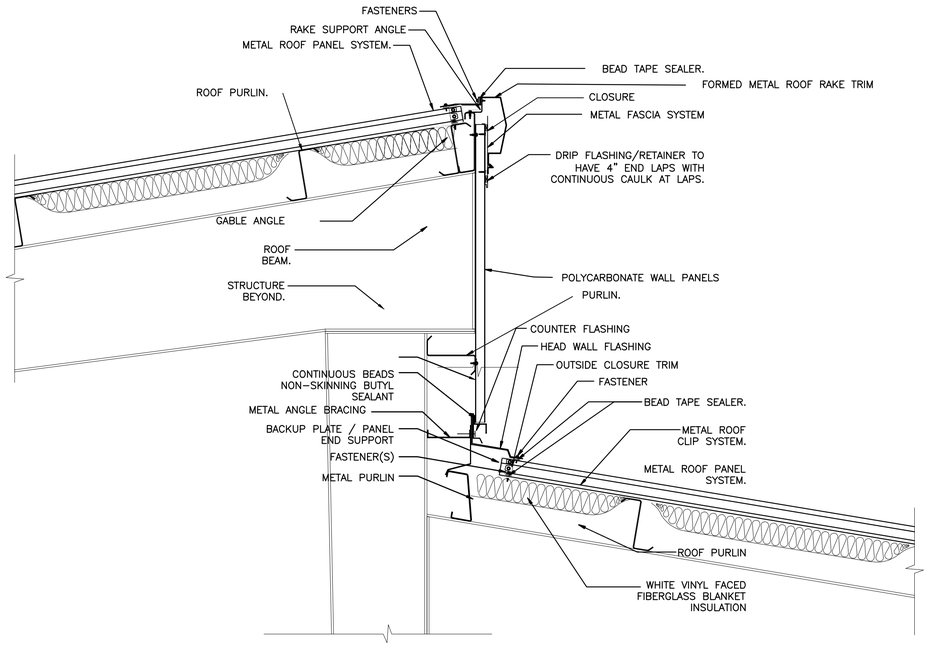

4 RAKE DETAIL AT LAB / SHOP
SCALE: 1" = 1' - 0"

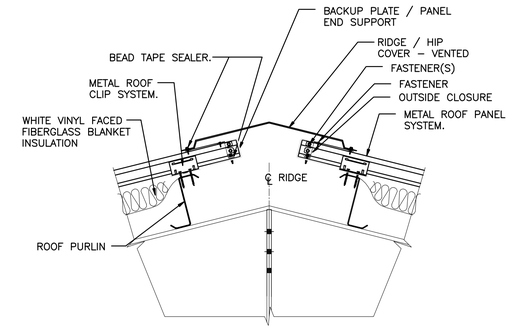

2 RIDGE VENT DETAIL
SCALE: 1" = 1'-0"

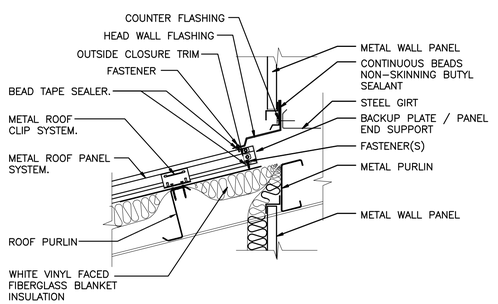

1 SIDEWALL / ROOF TRANSITION
SCALE: 1" = 1'-0"

ROOF DETAILS

NOTE: THIS DRAWING WAS CREATED FOR PRODUCTION ON 22" x 34" SHEET SIZE. DO NOT SCALE PRINTS.

Texas Department of Transportation
125 E. 11th Street
Austin, Texas 78701-2483
(512) 416-2000

Copyright © 2005 Texas Department of Transportation

THIS DOCUMENT IS RELEASED FOR THE PURPOSE OF
INFORMATION ONLY
NOT FOR REGULATORY
APPROVAL, PERMITTING,
OR CONSTRUCTION.

WACO AREA ENGINEER AND MAINTENANCE FACILITY
WACO, MCLENNAN COUNTY
WACO DISTRICT

Revisions

Drawn by:
KAO/EE
Project No.
CBC4704-00672
Date
05.21.2007
Sheet No.

A3.5
of 37 sheets

CADFILE: T:\MNTPAVD\02FTW\CBC4704-00-00\703-7F-FY04\00672\Acad\prints\typical pdf\waco\Acad\Arch\00672_A3_5.dwg Plotted: Fri, Aug. 07, 2009 @ 12:28 PM By: MBAZAN

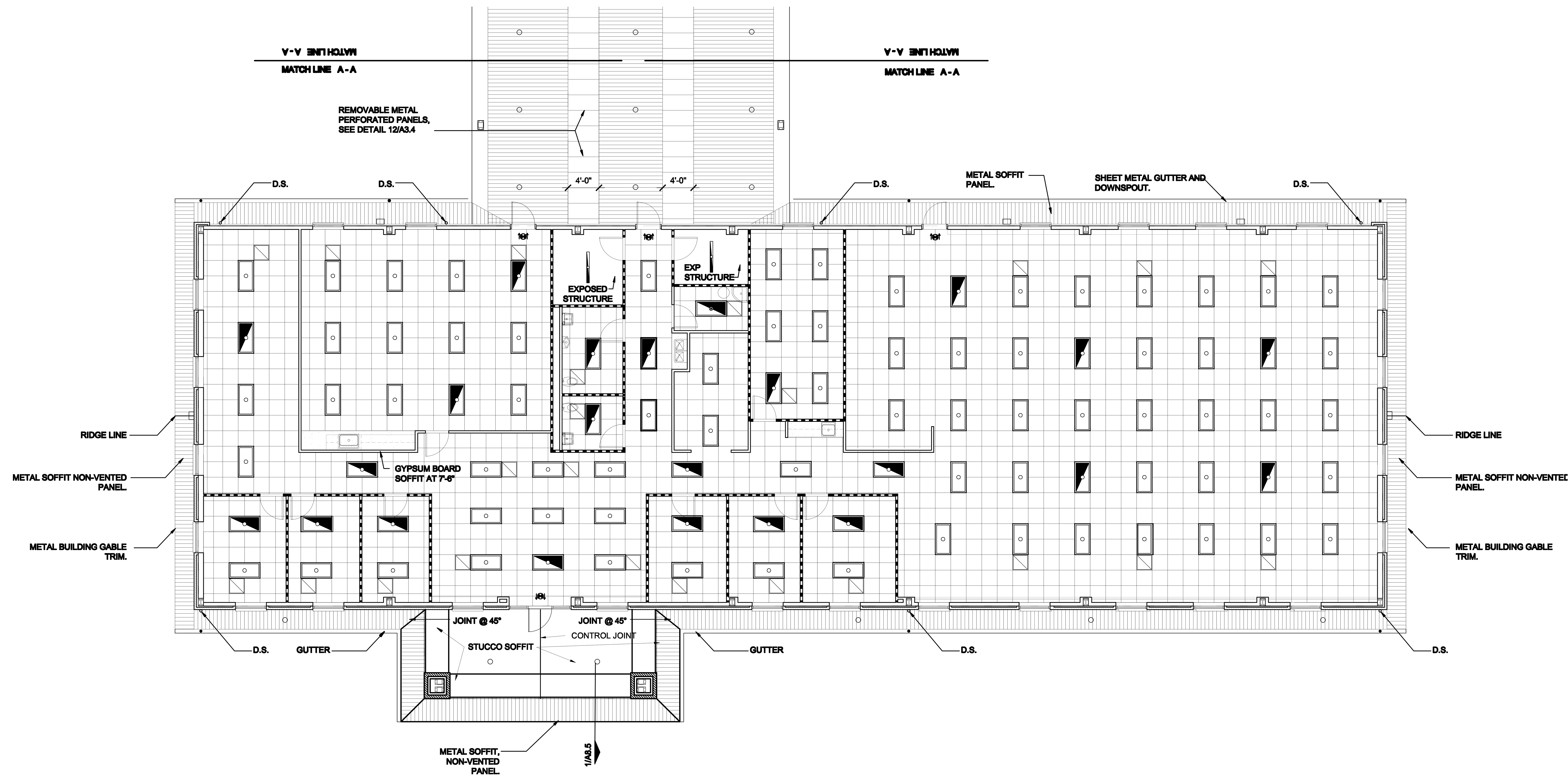

1 REFLECTED CEILING PLAN - OFFICE

SCALE: 1/8" = 1'-0"

LEGEND

- RETURN AIR DIFFUSER
- SUPPLY AIR DIFFUSER
- LIGHT FIXTURE REF: ELEC.
- EMERGENCY LIGHT FIXTURE REF: ELEC.
- 2' X 2' SUSPENDED ACOUSTICAL CEILING GRID
- RECESSED LIGHT FIXTURE
- LIGHT FIXTURE REF: ELEC.
- EXIT LIGHT
- LIGHT FIXTURE REF: ELEC.
- GYP. BOARD

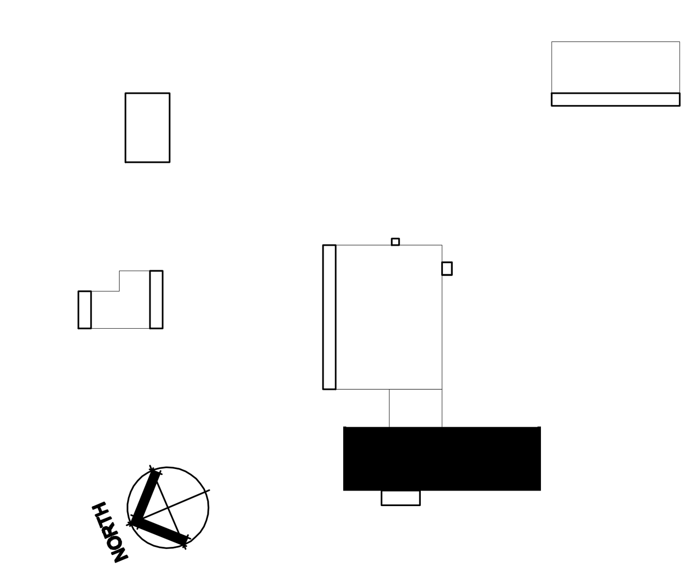

KEY PLAN

Texas Department of Transportation
125 E. 11th Street
Austin, Texas 78701-2483
(512) 416-3048
Copyright © 2005 Texas Department of Transportation

THIS DOCUMENT IS RELEASED FOR THE PURPOSE OF INFORMATION ONLY
NOT FOR REGULATORY APPROVAL, PERMITTING, OR CONSTRUCTION.

WACO AREA ENGINEER AND MAINTENANCE FACILITY
WACO, MCLENNAN COUNTY
WACO DISTRICT

Revisions

Drawn by: KAO/EE
Project No. CBC4704-00672
Date 05.21.2007
Sheet No.

A4.1
of 37 sheets

REFLECTED CEILING PLAN-OFFICE

NOTE: THIS DRAWING WAS CREATED FOR PRODUCTION ON 22" x 34" SHEET SIZE. DO NOT SCALE PRINTS.

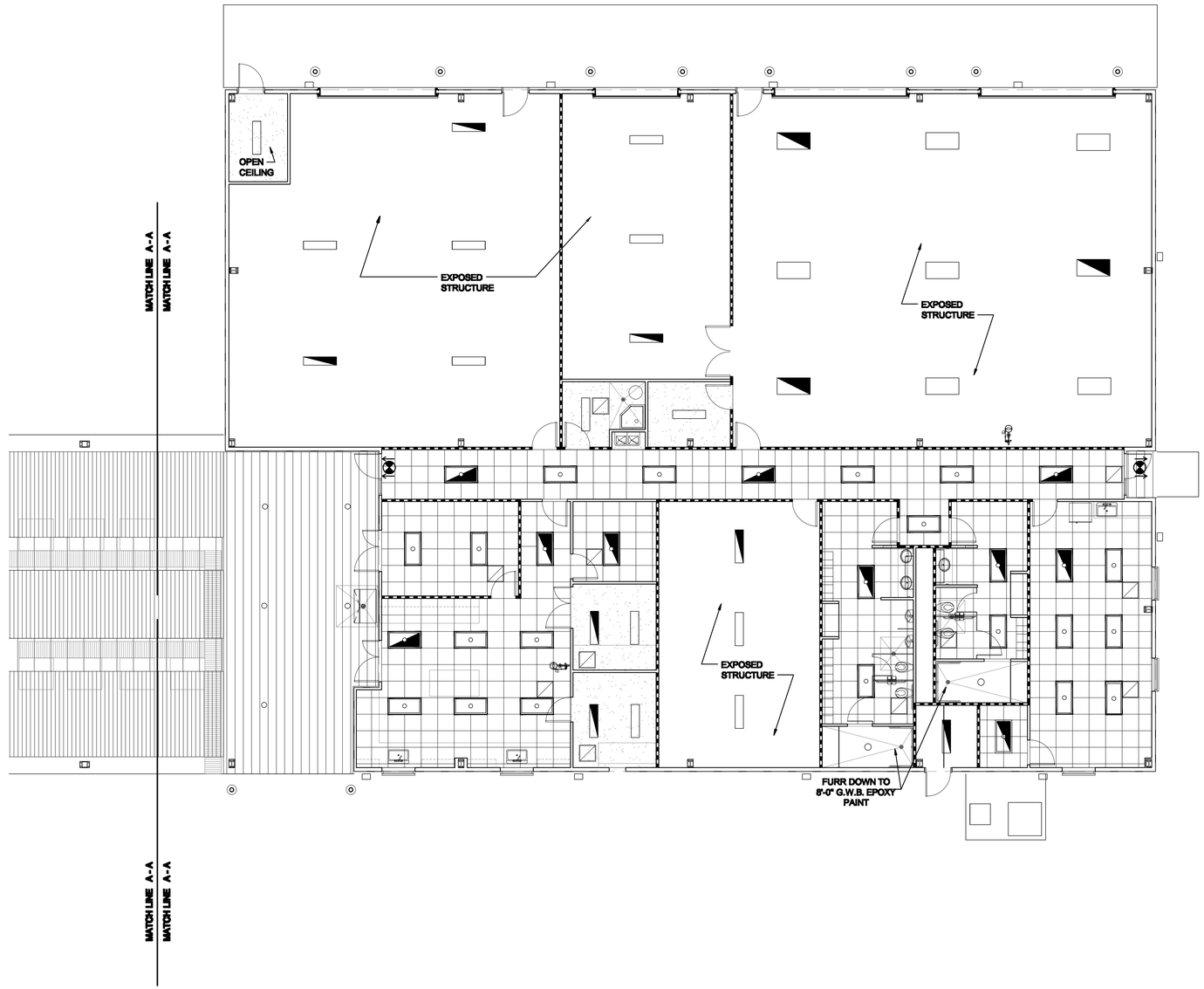

1 **REFLECTED CEILING PLAN - SHOP/LAB**
SCALE: 1/8" = 1'-0"

LEGEND

- RETURN AIR DIFFUSER
- SUPPLY AIR DIFFUSER
- LIGHT FIXTURE REF: ELEC.
- EMERGENCY LIGHT FIXTURE REF: ELEC.
- 2' X 2' SUSPENDED ACOUSTICAL CEILING GRID
- RECESSED LIGHT FIXTURE
- LIGHT FIXTURE REF: ELEC.
- EXIT LIGHT
- LIGHT FIXTURE REF: ELEC.
- GYP. BOARD

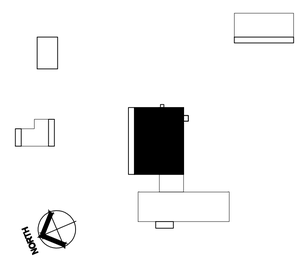

KEY PLAN

REFLECTED CEILING PLAN - LAB/SHOP

NOTE: THIS DRAWING WAS CREATED FOR PRODUCTION ON 22" x 34" SHEET SIZE. DO NOT SCALE PRINTS.

Texas Department of Transportation
125 E. 11th Street
Austin, Texas 78701-2483
(512) 416-3000
Copyright © 2005 Texas Department of Transportation

THIS DOCUMENT IS RELEASED FOR THE PURPOSE OF
INFORMATION ONLY
NOT FOR REGULATORY
APPROVAL, PERMITTING,
OR CONSTRUCTION.

WACO AREA ENGINEER AND MAINTENANCE FACILITY
WACO, MCLENNAN COUNTY
WACO DISTRICT

Revisions

Drawn by: KAO/EE
Project No. CBC4704-00672
Date 05.21.2007
Sheet No.

A4.2
of 37 sheets

CADFILE: T:\ANITA\DOGFTWC\BC4704-00-657\02-77-4704006572\Acad\proto\typical pdf\waco\Acad\Arch\06572_A4_2.dwg Plotted: Fri, Aug. 07, 2009 @ 12:57 PM By: MBAYAN

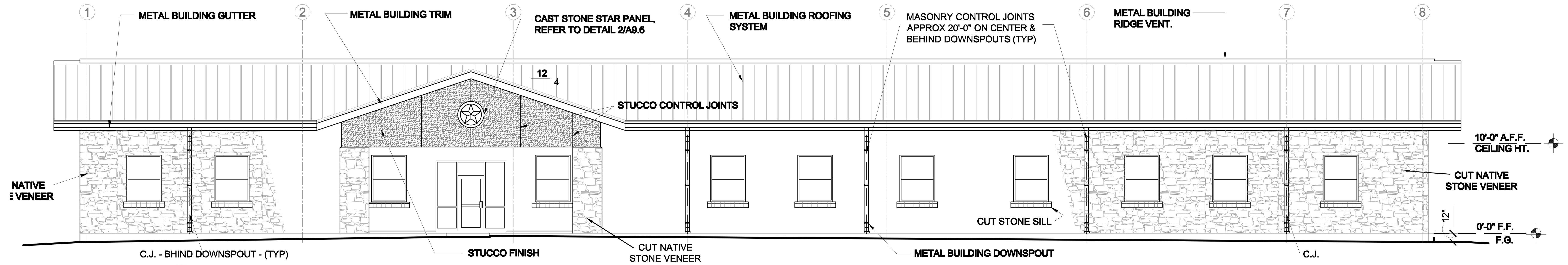

1 **SOUTH ELEVATION**
SCALE: 1/8"=1'-0"

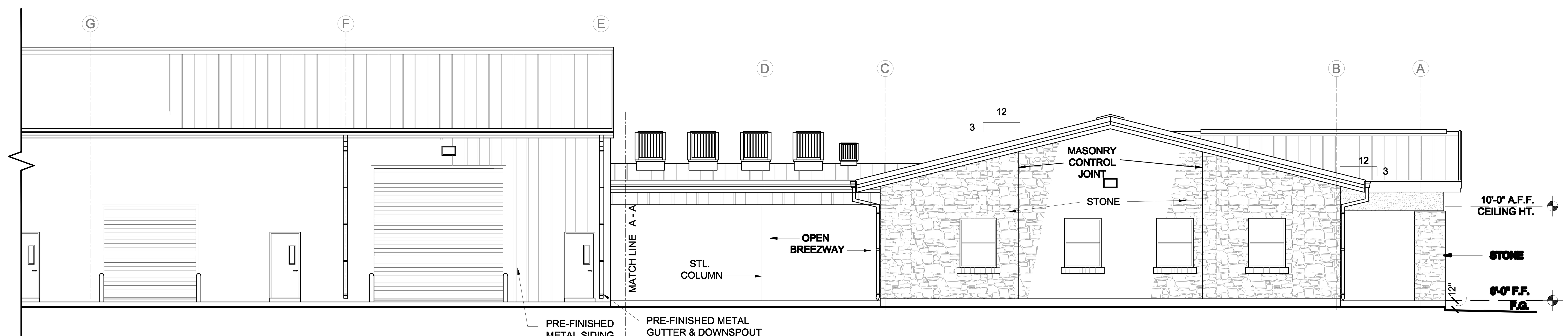

2 **WEST ELEVATION**
SCALE: 1/8"=1'-0"

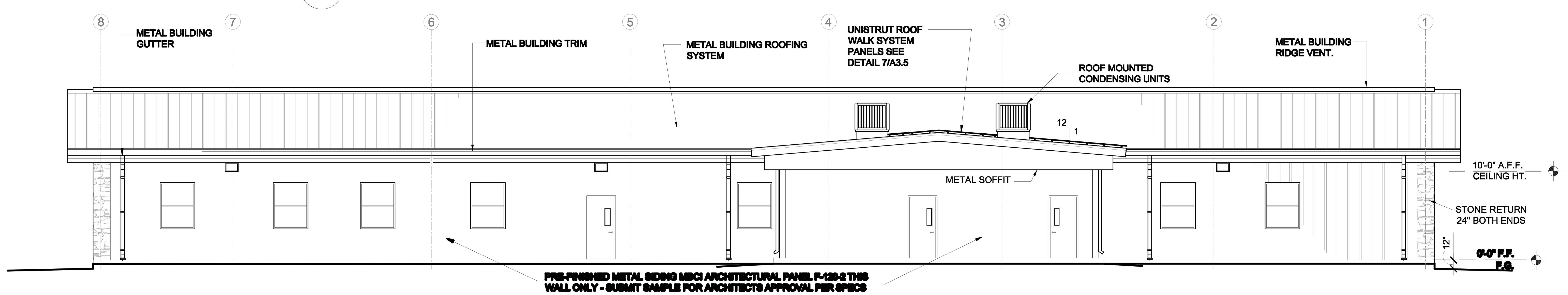

3 **NORTH ELEVATION**
SCALE: 1/8"=1'-0"

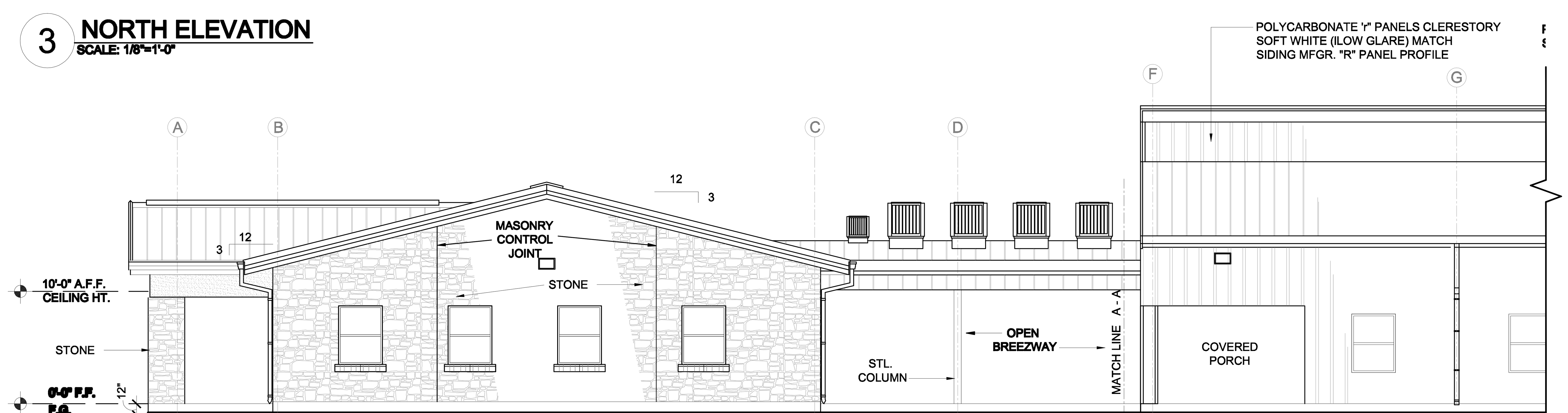

4 **EAST ELEVATION**
SCALE: 1/8"=1'-0"

EXTERIOR ELEVATIONS - OFFICE BUILDING

NOTE: THIS DRAWING WAS CREATED FOR PRODUCTION ON 22" x 34" SHEET SIZE. DO NOT SCALE PRINTS.

Texas Department of Transportation
125 E. 11th Street
Austin, Texas 78701-2483
(512) 416-3046
Copyright © 2005 Texas Department of Transportation

THIS DOCUMENT IS RELEASED FOR THE PURPOSE OF INFORMATION ONLY
NOT FOR REGULATORY APPROVAL, PERMITTING, OR CONSTRUCTION.

WACO AREA ENGINEER AND MAINTENANCE FACILITY
WACO, MCLENNAN COUNTY
WACO DISTRICT

Revisions

Drawn by: KAO/EE
Project No. CBC4704-00672
Date 05.21.2007
Sheet No. A5.1
of 37 sheets

CADFILE: T:\MNTFMD\02FTW\CBC4704-00-637\02-77-4704000637\Acad\prototypical pdfs\waco\Acad\Arch\0672_A5_1.dwg Plotted: Fri. Aug. 07, 2009 @ 12:57 PM By: MBAZAN

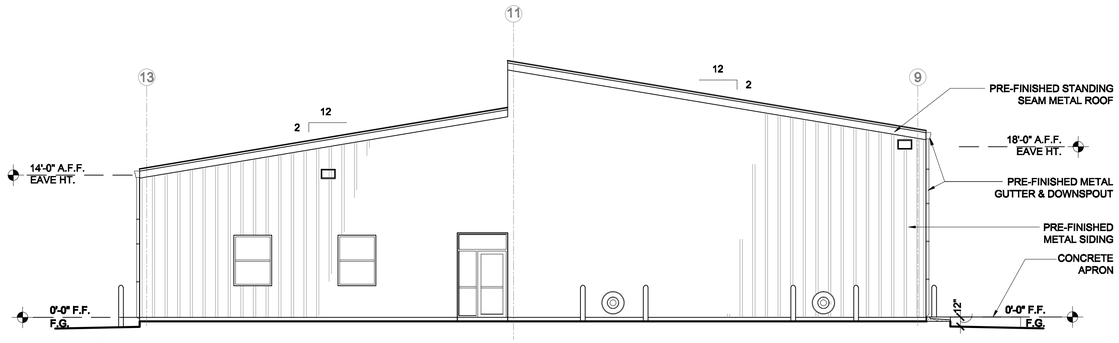

1 NORTH ELEVATION
SCALE: 1/8"=1'-0"

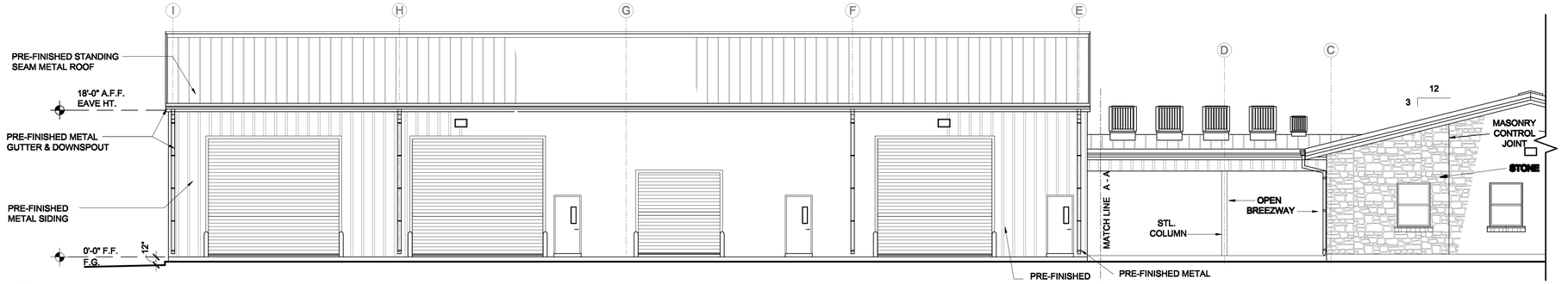

2 WEST ELEVATION
SCALE: 1/8"=1'-0"

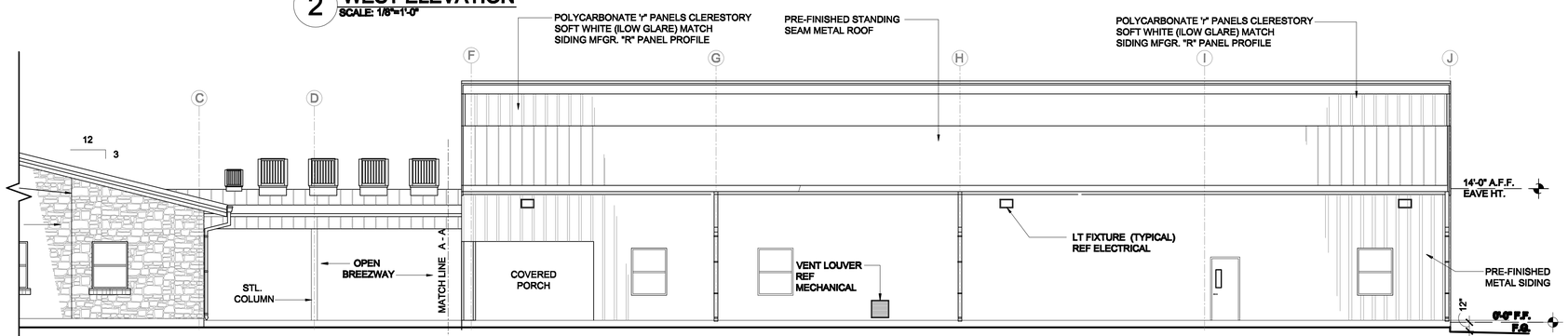

3 EAST ELEVATION
SCALE: 1/8"=1'-0"

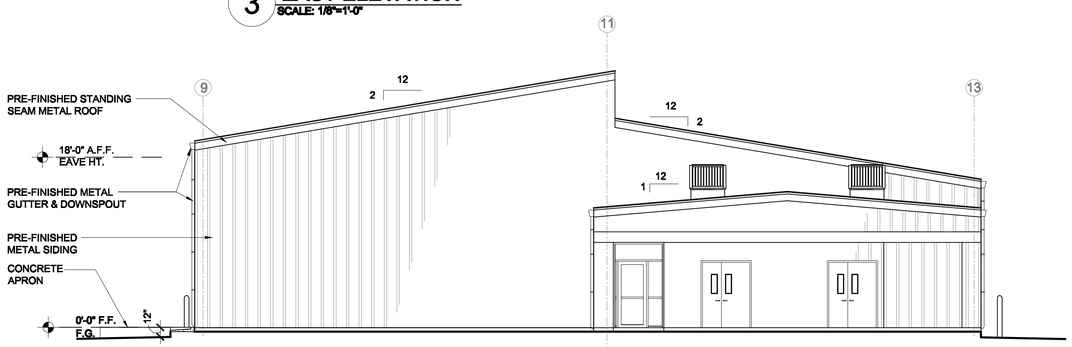

4 SOUTH ELEVATION
SCALE: 1/8"=1'-0"

EXTERIOR ELEVATIONS - LAB / SHOP BUILDING

NOTE: THIS DRAWING WAS CREATED FOR PRODUCTION ON 22" x 34" SHEET SIZE. DO NOT SCALE PRINTS.

Texas Department of Transportation
125 E. 11th Street
Austin, Texas 78701-2483
(512) 416-3000

Copyright © 2005 Texas Department of Transportation

THIS DOCUMENT IS RELEASED FOR THE PURPOSE OF INFORMATION ONLY NOT FOR REGULATORY APPROVAL, PERMITTING, OR CONSTRUCTION.

WACO AREA ENGINEER AND MAINTENANCE FACILITY
WACO, MCLENNAN COUNTY
WACO DISTRICT

Revisions

Drawn by: KAO/EE
Project No. CBC4704-00672
Date 05.21.2007
Sheet No.
A5.2
of 37 sheets

CADFILE: T:\ANTRAD\02FTW\CBC4704-00-00\703-77-4704008370\Acad\prod\dgn\sht pdf\Waco\Acad\Arch\00572_A5_2.dwg Pltdat: Fri, Aug. 07, 2009 @ 12:28 PM By: MBAZAN

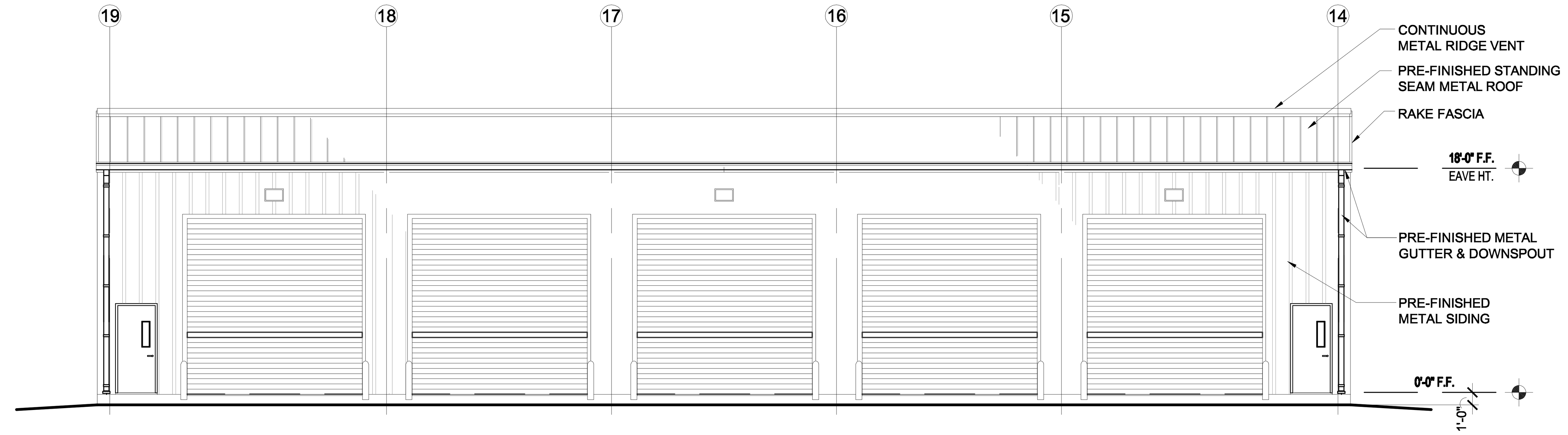

1 FRONT ELEVATION
SCALE: 1/8"=1'-0"

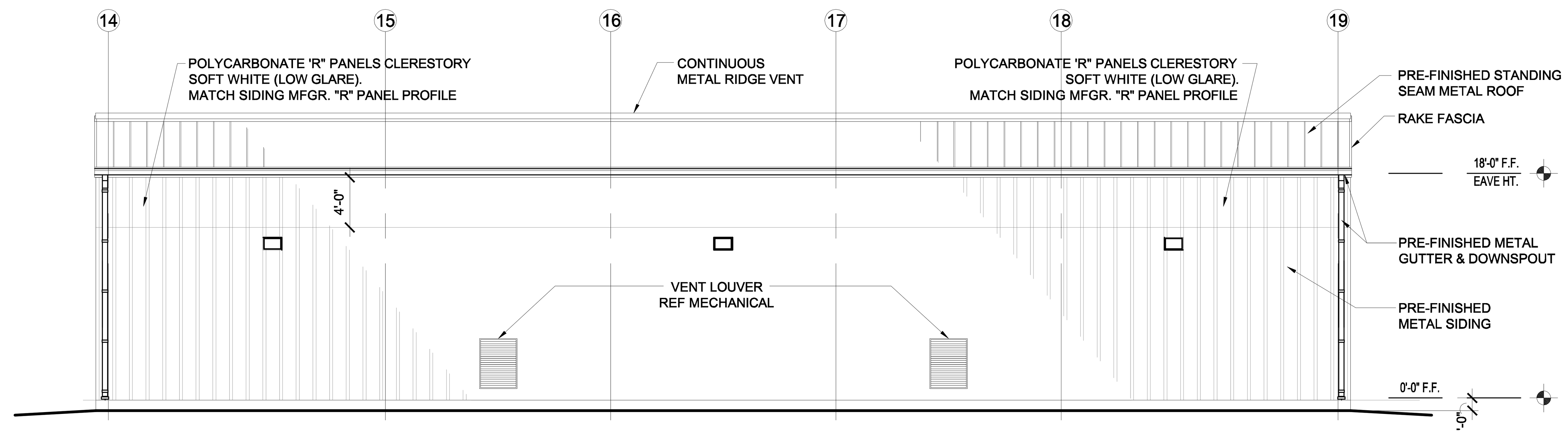

2 REAR ELEVATION
SCALE: 1/8"=1'-0"

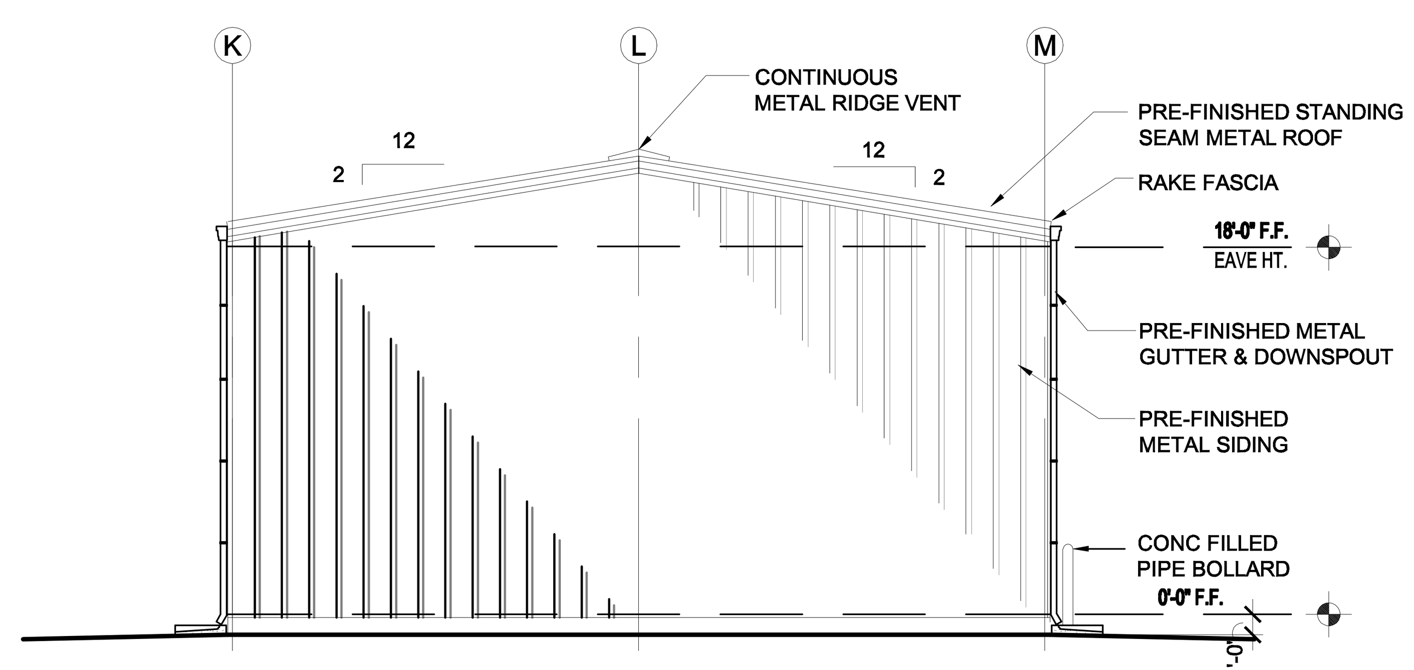

3 SIDE ELEVATION
SCALE: 1/8"=1'-0"

CADFILE: T:\MNTFMD02FTW\CBC4704-00-837\02-77-470400837\Acad\prototypical pdfs\waco\Acad\Arch\0672_A5_3.dwg Plotted: Fri, Aug. 07, 2009 @ 12:59 PM By: MBAZAN

Texas Department of Transportation
125 E. 11th Street
Austin, Texas 78701-2483
(512) 416-3045
Copyright © 2005 Texas Department of Transportation

THIS DOCUMENT IS RELEASED FOR THE PURPOSE OF
INFORMATION ONLY
NOT FOR REGULATORY
APPROVAL, PERMITTING,
OR CONSTRUCTION.

WACO AREA ENGINEER AND MAINTENANCE FACILITY
WACO, MCLENNAN COUNTY
WACO DISTRICT

Revisions

Drawn by:
KAO/AV
Project No.
CBC4704-00672
Date
05.21.2007
Sheet No.
A5.3
of 37 sheets

EXTERIOR ELEVATIONS - VEHICLE STORAGE

NOTE: THIS DRAWING WAS CREATED FOR PRODUCTION ON 22" x 34" SHEET SIZE. DO NOT SCALE PRINTS.

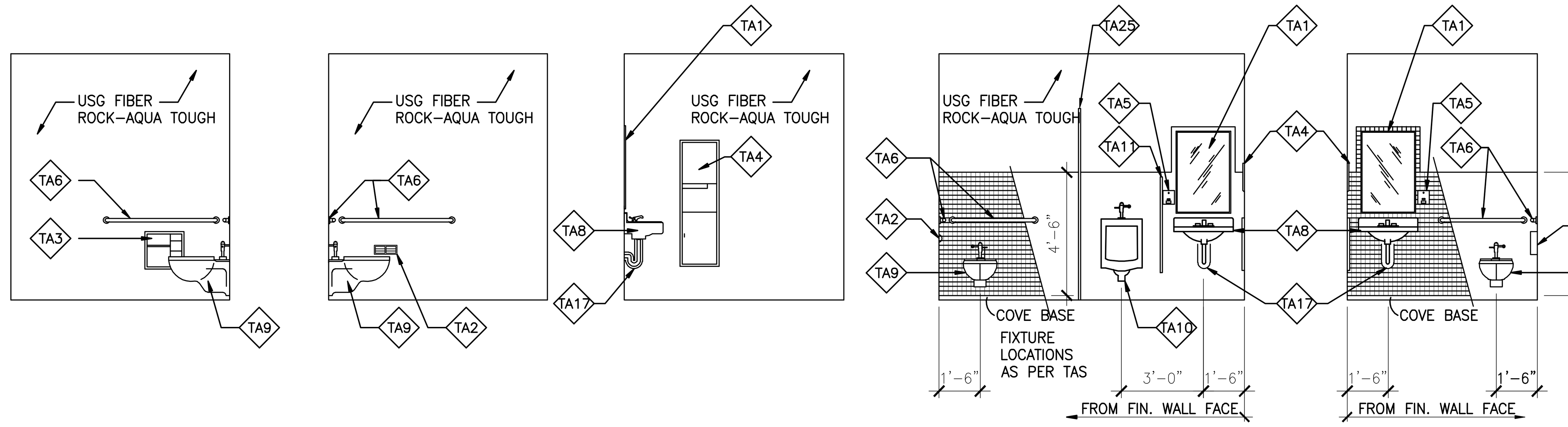

13 WOMEN
SCALE: 1/4" = 1'-0"

12 MEN
SCALE: 1/4" = 1'-0"

11 WOMEN
SCALE: 1/4" = 1'-0"

10 MEN
SCALE: 1/4" = 1'-0"

9 WOMEN
SCALE: 1/4" = 1'-0"

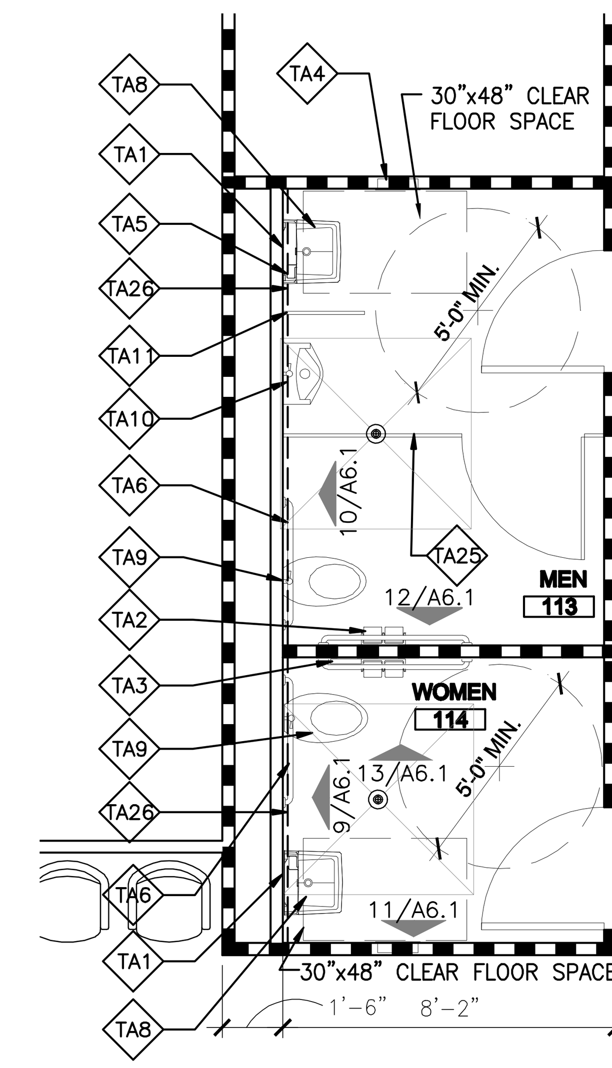

2 ENLARGED FLOOR PLAN
SCALE: 1/4" = 1'-0"

NOTE: INSTALL PLUMBING PER ADA & TAS COMPLIANCE. REFER TO SHEET G1.2 FOR ADA MOUNTING HEIGHTS

TOILET ACCESSORIES SCHEDULE / KEY NOTES

- TA1 – 24" X 36" MIRROR. BOTTOM EDGE MOUNTED 40" A.F.F.
- TA2 – DOUBLE ROLL TOILET TISSUE DISPENSER
- TA3 – SANITARY NAPKIN DISPOSAL/TOILET TISSUE DISPENSER
- TA4 – SURFACE MOUNTED PAPER TOWEL DISPENSER – 4'-2" A.F.F. TO DISPENSER OPENING
- TA5 – SOAP DISPENSER @ 44" AFF
- TA6 – TOILET GRAB BARS – 34" A.F.F. 36" LONG AT REAR, 42" LONG ON SIDE LOCATED 12" MAX FROM REAR WALL.
- TA7 – PROVIDE TILE SPACERS BEHIND MIRROR, WITH TILE BOARDER AROUND MIRROR.
- TA8 – WALL MOUNTED LAVATORY
- TA9 – WALL MOUNTED WATER CLOSET
- TA10– WALL MOUNTED URINAL
- TA11– URINAL SCREEN – 21" DEEP
- TA12– CURTAIN AND ROD
- TA13– 24"x 60" FIXED DRESSING BENCH ON 4 PEDESTALS
- TA14– 12" DOUBLE TIER LOCKERS ON 4" CONCRETE CURB
- TA15– STAINLESS STEEL CORNER GUARDS 5'-0" HT.
- TA16– CLOTHES HOOK @ 48" AFF MAX.
- TA17– PROTECTIVE COVERS AT PIPES
- TA18– SHOWER GRAB BAR @ 34" A. F. F.
- TA19– 4" SPLASH GUARD
- TA20– COUNTER MOUNTED LAVATORY
- TA21– PLASTIC LAMINATE COUNTER WITH RECESSED LAVATORY WITH PLUMBING APRON
- TA22– 24"x 48" FIXED DRESSING BENCH ON 4 PEDESTALS
- TA23– 72" X 36" MIRROR. BOTTOM EDGE MOUNTED 40" A.F.F.
- TA24– 60" X 36" MIRROR. BOTTOM EDGE MOUNTED 40" A.F.F.
- TA25– TOILET PARTITIONS
- TA26– LIMITS OF CERAMIC TILE

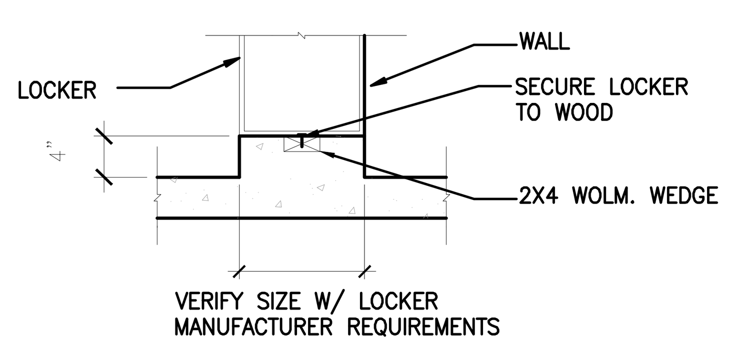

14 BASE AT LOCKERS
SCALE: 3/4" = 1'-0"

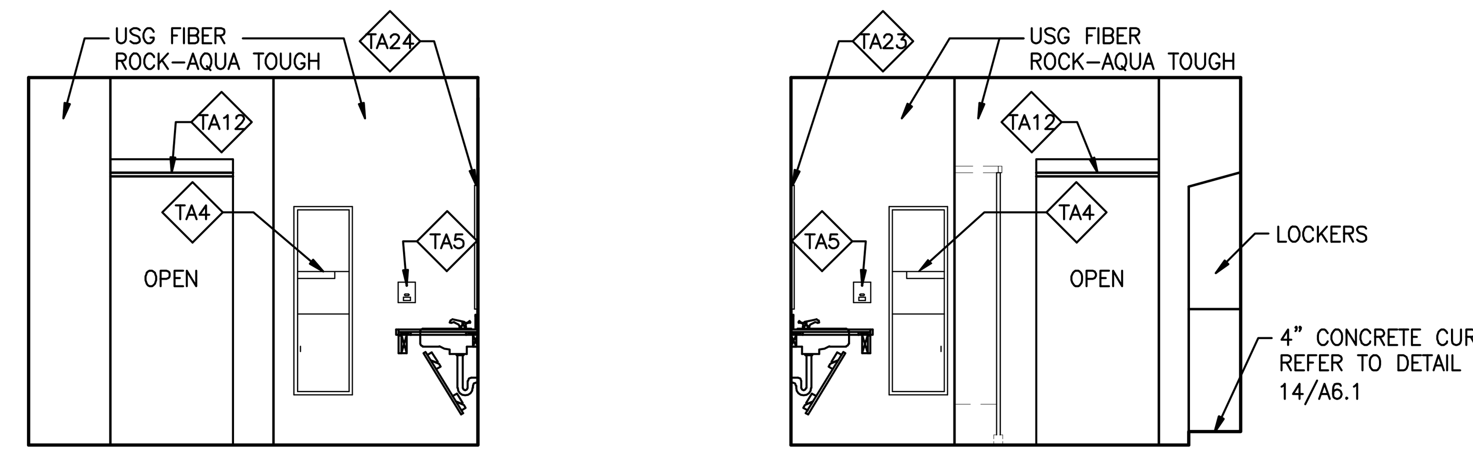

8 WOMEN - ELEVATION
SCALE: 1/4" = 1'-0"

7 MEN - ELEVATION
SCALE: 1/4" = 1'-0"

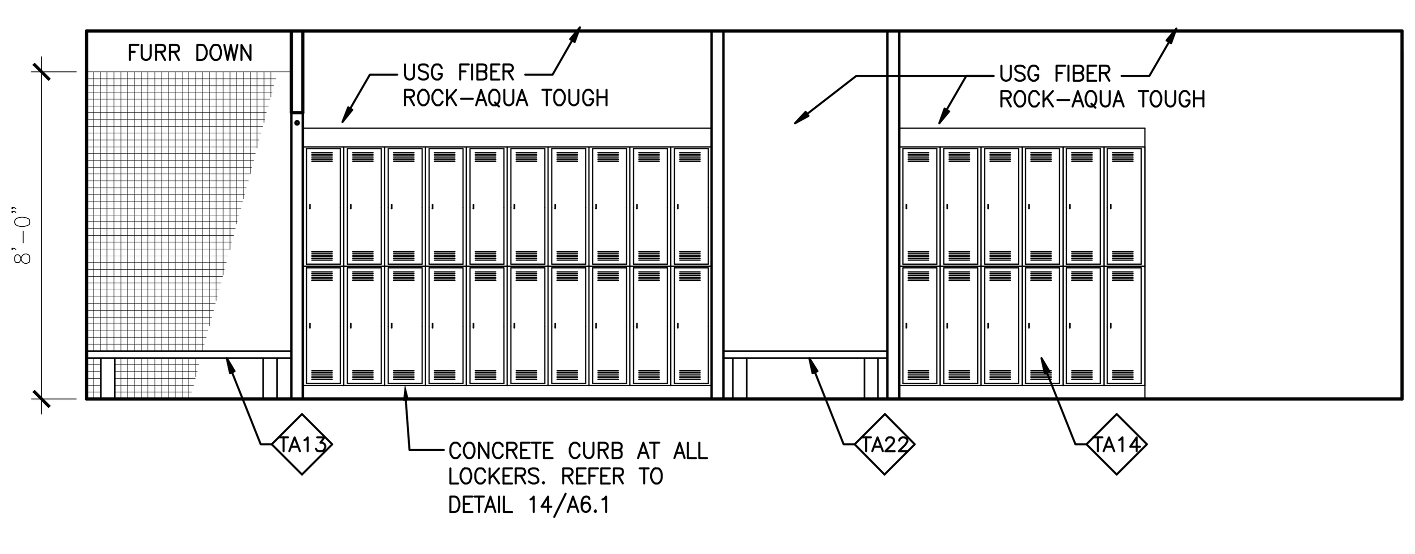

6 MEN - ELEVATION
SCALE: 1/4" = 1'-0"

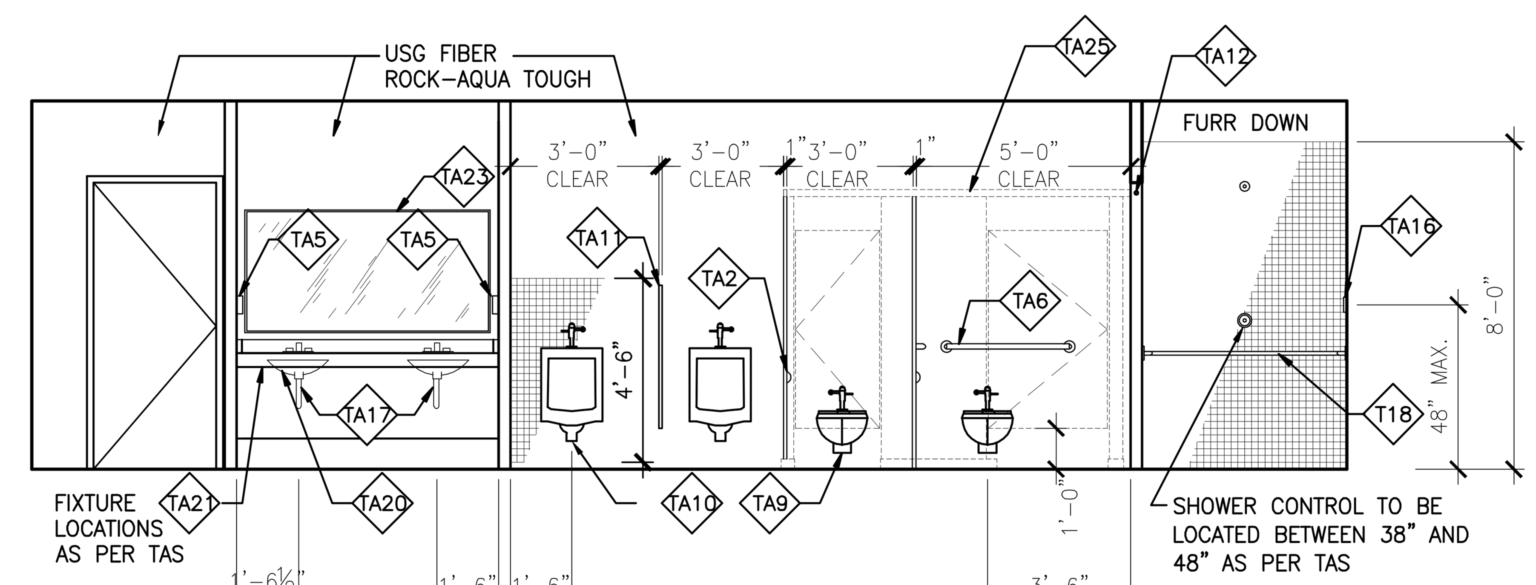

5 MEN - ELEVATION
SCALE: 1/4" = 1'-0"

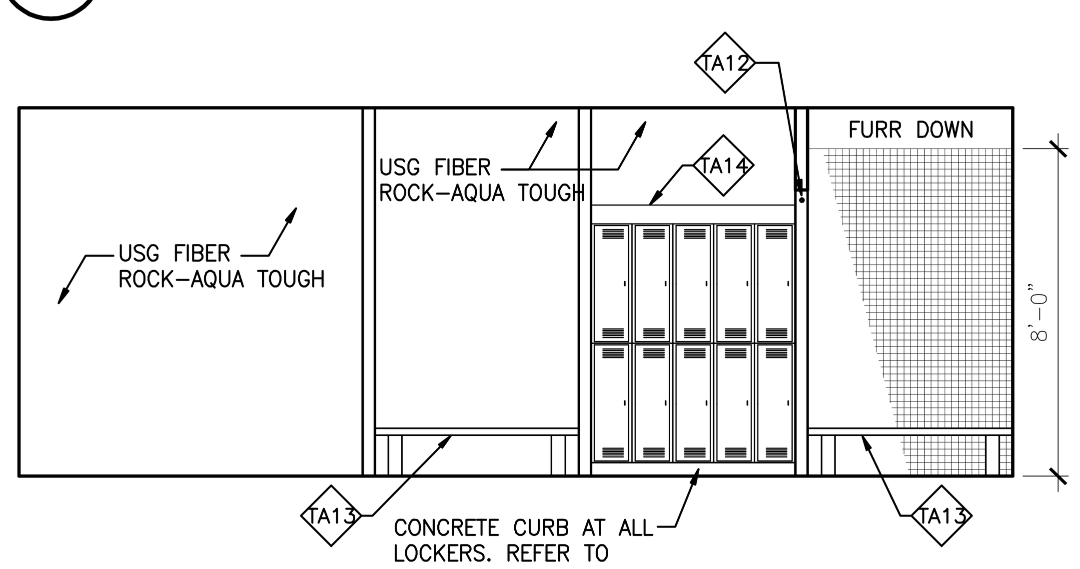

4 WOMEN - ELEVATION
SCALE: 1/4" = 1'-0"

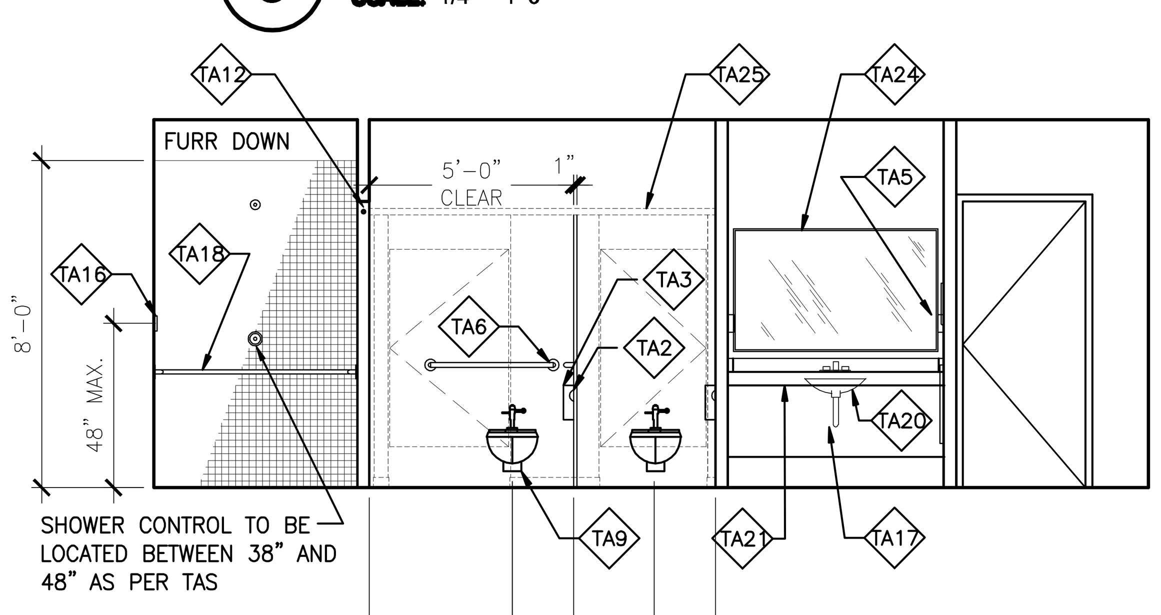

3 WOMEN - ELEVATION
SCALE: 1/4" = 1'-0"

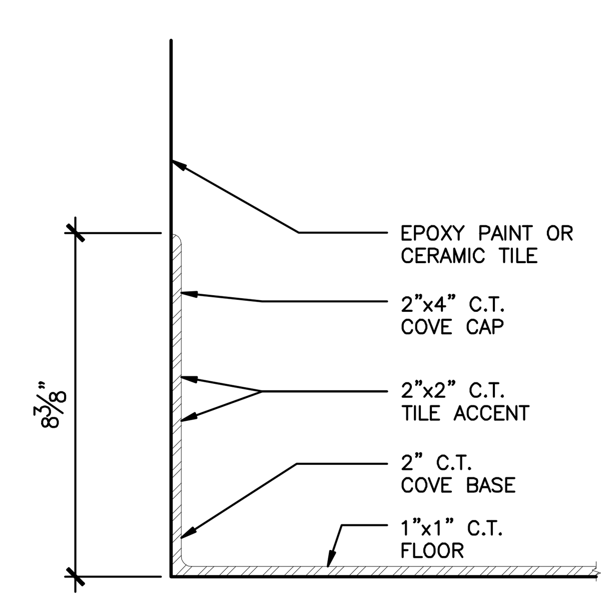

15 C.T. COVE BASE
SCALE: 3" = 1'-0"

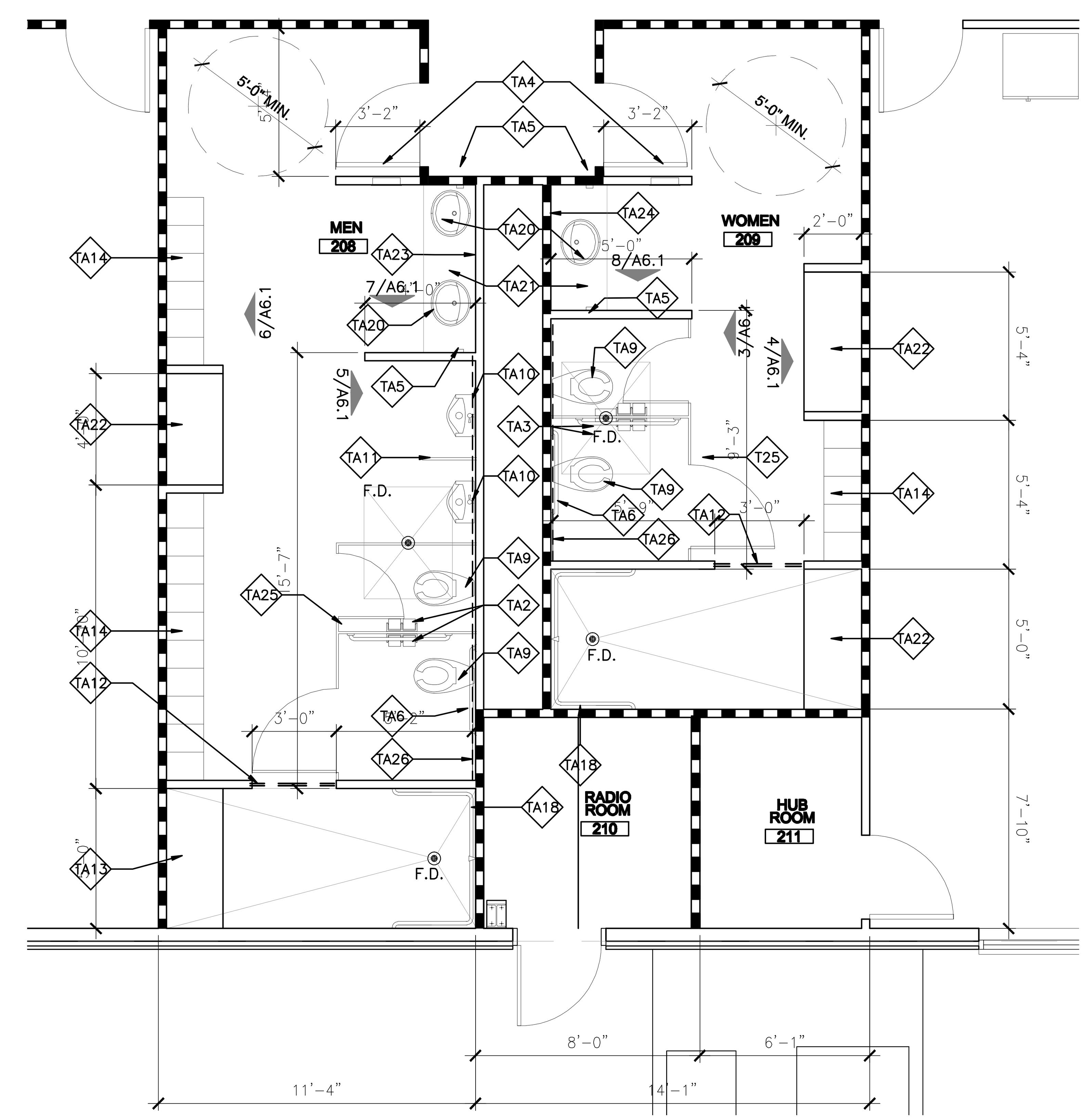

1 ENLARGED FLOOR PLAN
SCALE: 1/4" = 1'-0"

TOILETS - PLANS & ELEVATIONS

Texas Department of Transportation
125 E. 11th Street
Austin, Texas 78701-2483
(512) 416-2046
Copyright © 2005 Texas Department of Transportation

THIS DOCUMENT IS RELEASED FOR THE PURPOSE OF INFORMATION ONLY
NOT FOR REGULATORY APPROVAL, PERMITTING, OR CONSTRUCTION.

WACO AREA ENGINEER AND MAINTENANCE FACILITY
WACO, MCLENNAN COUNTY WACO DISTRICT

Revisions

Drawn by: KAO/EE
Project No. CBC4704-00672
Date 05.21.2007
Sheet No. A6.1
of 37 sheets

NOTE: THIS DRAWING WAS CREATED FOR PRODUCTION ON 22" x 34" SHEET SIZE. DO NOT SCALE PRINTS.

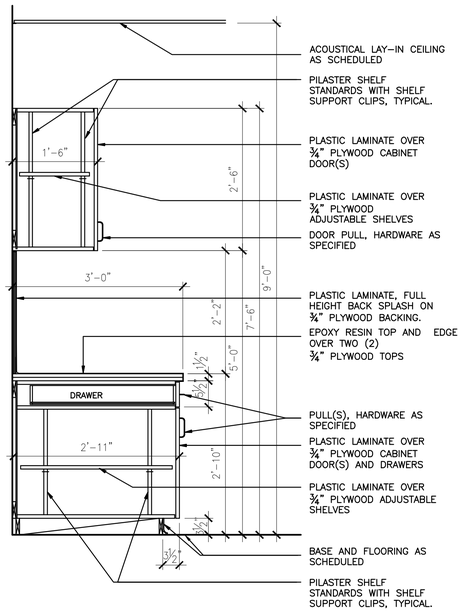

11 **SECTION** SCALE: 3/4" = 1'-0"

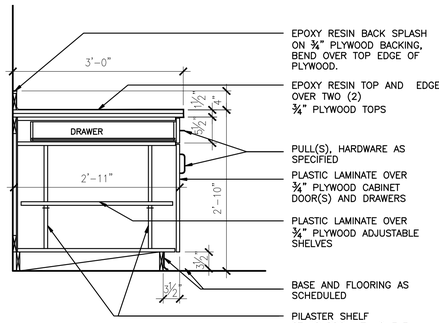

10 **SECTION** SCALE: 3/4" = 1'-0"

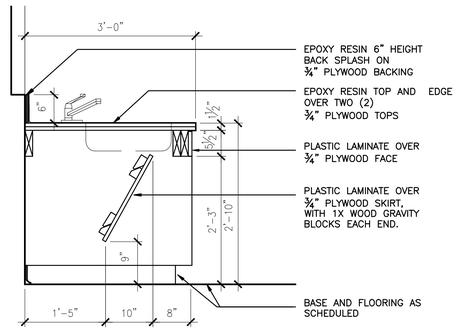

9 **SECTION** SCALE: 3/4" = 1'-0"

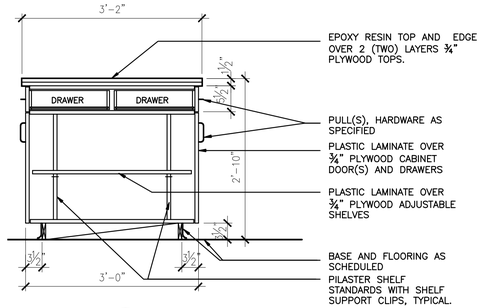

8 **SECTION** SCALE: 3/4" = 1'-0"

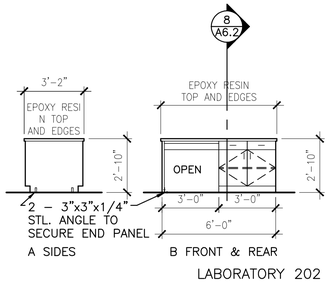

LABORATORY 202

7 **ELEVATION** SCALE: 1/4" = 1'-0"

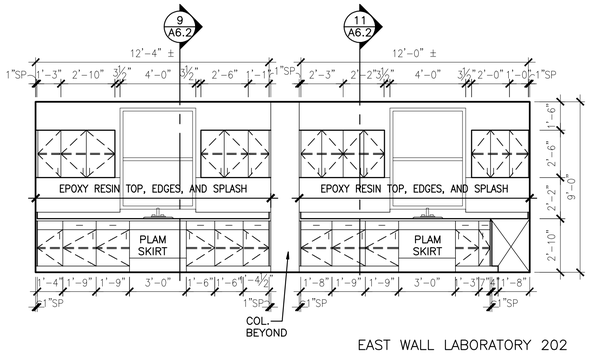

EAST WALL LABORATORY 202

6 **ELEVATION** SCALE: 1/4" = 1'-0"

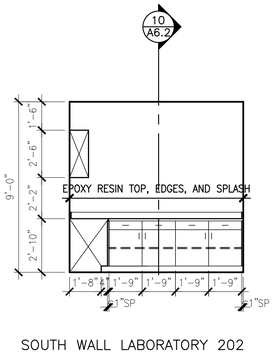

SOUTH WALL LABORATORY 202

5 **ELEVATION** SCALE: 1/4" = 1'-0"

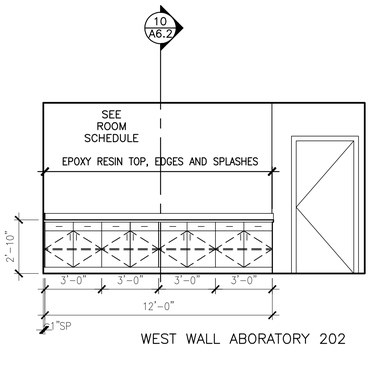

WEST WALL ABORATORY 202

4 **ELEVATION** SCALE: 1/4" = 1'-0"

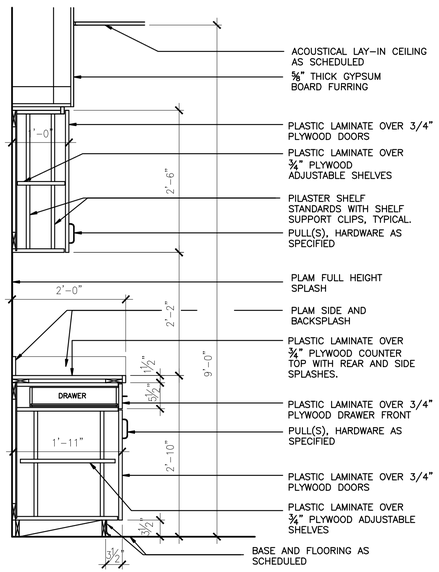

13 **SECTION** SCALE: 3/4" = 1'-0"

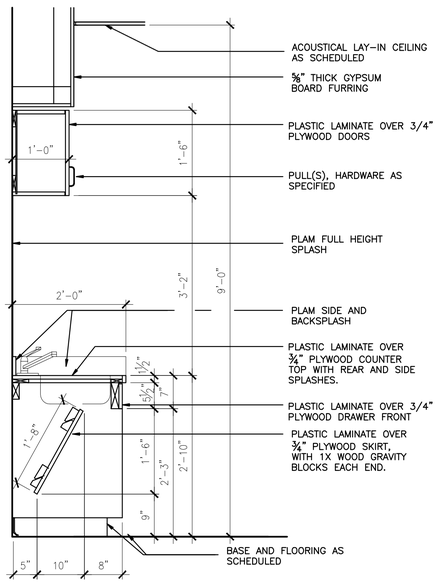

12 **SECTION** SCALE: 3/4" = 1'-0"

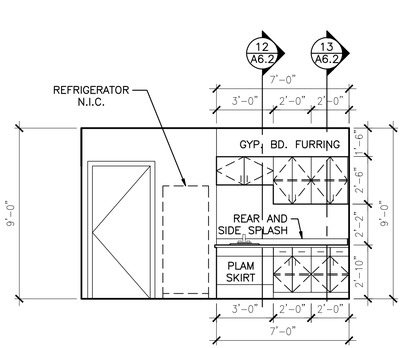

CREW RM 212

3 **ELEVATION** SCALE: 1/4" = 1'-0"

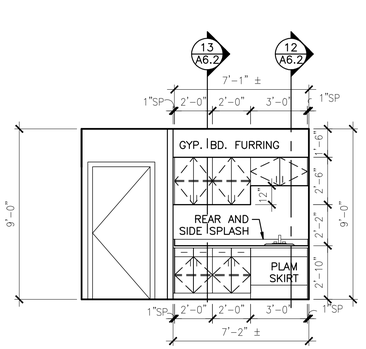

CORRIDOR 106

2 **ELEVATION** SCALE: 1/4" = 1'-0"

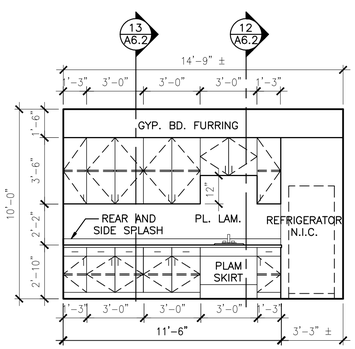

MEETING ROOM 115

1 **ELEVATION** SCALE: 1/4" = 1'-0"

GENERAL NOTES:

1. PROVIDE 2 ROWS OF 2X6 FIRE–RETARDANT WOOD BLOCKING FOR EACH UPPER CABINET.
2. SEE MILLWORK ELEVATIONS FOR NUMBER OF ADJUSTABLE SHELVES.
3. PLASTIC LAMINATE FINISH AT THE INTERIOR SURFACES OF ALL CABINETS AND SHELVES SURFACES.
4. REFER TO SHEET A6.3 FOR MILLWORK DETAILS.

MILLWORK ELEVATIONS

Texas Department of Transportation
125 E. 11th Street
Austin, Texas 78701-2483
(512) 416-2000

Copyright © 2005 Texas Department of Transportation

THIS DOCUMENT IS RELEASED FOR THE PURPOSE OF INFORMATION ONLY NOT FOR REGULATORY APPROVAL, PERMITTING, OR CONSTRUCTION.

WACO AREA ENGINEER AND MAINTENANCE FACILITY
WACO, MCLENNAN COUNTY
WACO DISTRICT

Revisions

Drawn by: JOT
Project No. CBC4704-00672
Date 05.21.2007
Sheet No.

A6.2
of 37 sheets

NOTE: THIS DRAWING WAS CREATED FOR PRODUCTION ON 22" x 34" SHEET SIZE. DO NOT SCALE PRINTS.

CADFILE: T:\ANTRAK\DGN\TWC\CBC4704-00-65\103-77-47\400837\Acad\proto\dyn\sht pdf\Iresco\Acad\Arch\05172_A6_2.dwg Plotted: Fri, Aug. 07, 2009 @ 1:30 PM By: MBAZAN

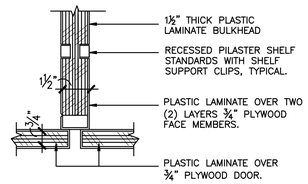

9 ENLARGED DETAIL
SCALE: 3" = 1'-0"

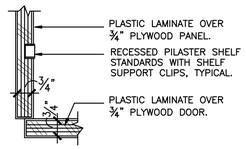

8 ENLARGED DETAIL
SCALE: 3" = 1'-0"

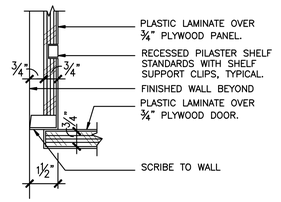

7 ENLARGED DETAIL
SCALE: 3" = 1'-0"

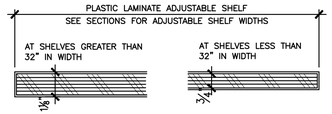

6 ENLARGED DETAIL
SCALE: 3" = 1'-0"

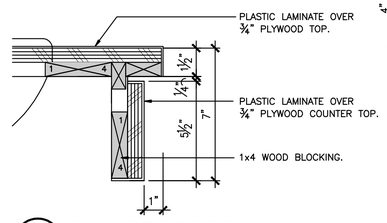

5 ENLARGED DETAIL
SCALE: 3" = 1'-0"

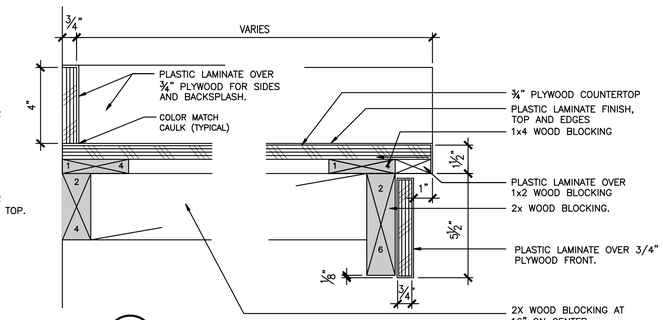

4 ENLARGED DETAIL
SCALE: 3" = 1'-0"

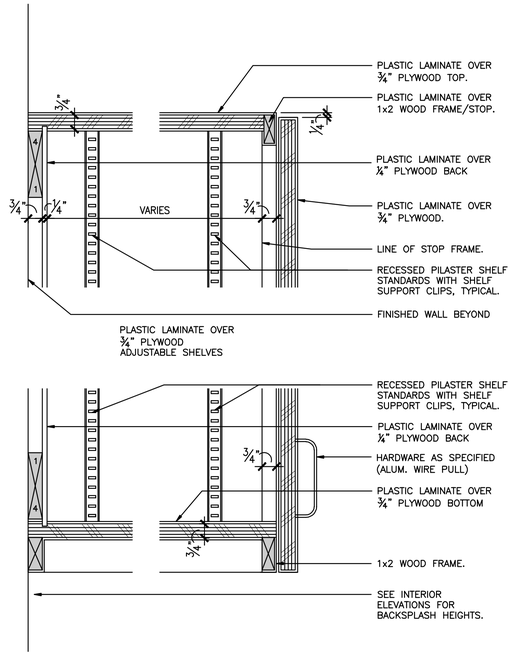

3 ENLARGED DETAIL
SCALE: 3" = 1'-0"

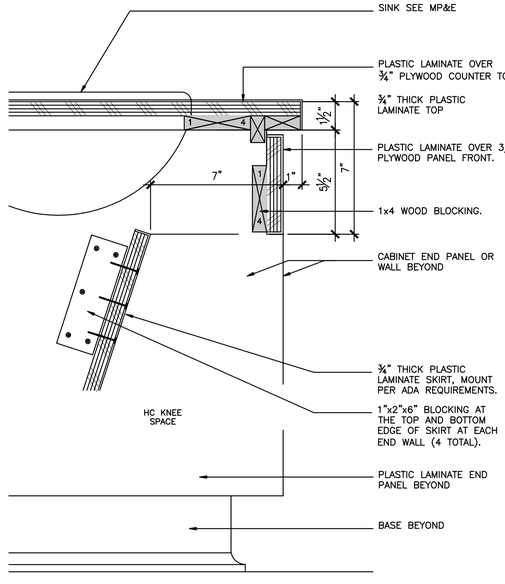

2 ENLARGED DETAIL
SCALE: 3" = 1'-0"

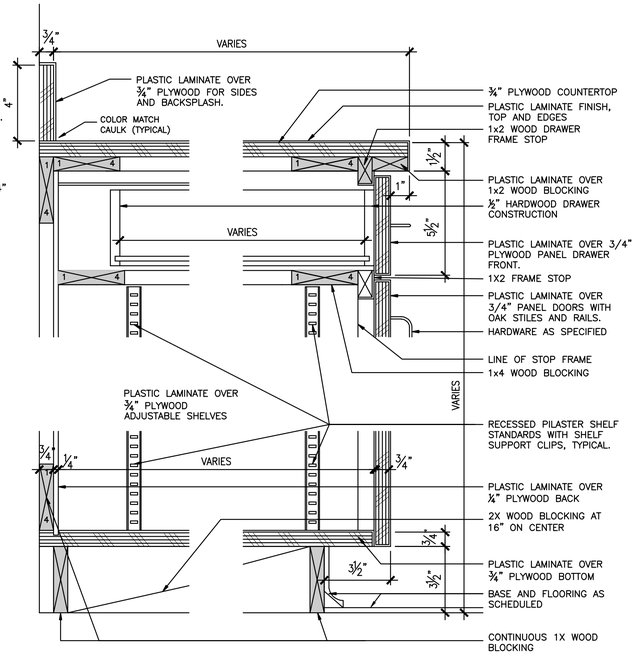

1 ENLARGED DETAIL
SCALE: 3" = 1'-0"

MILLWORK DETAILS

NOTE: THIS DRAWING WAS CREATED FOR PRODUCTION ON 22" x 34" SHEET SIZE. DO NOT SCALE PRINTS.

Texas Department of Transportation
125 E. 11th Street
Austin, Texas 78701-2483
(512) 416-3000

Copyright © 2005 Texas Department of Transportation

THIS DOCUMENT IS RELEASED FOR THE PURPOSE OF
INFORMATION ONLY
NOT FOR REGULATORY
APPROVAL, PERMITTING,
OR CONSTRUCTION.

WACO AREA ENGINEER AND MAINTENANCE FACILITY
WACO, MCLENNAN COUNTY
WACO DISTRICT

Revisions

Drawn by: JOT
Project No. CBC4704-00672
Date 05.21.2007
Sheet No. A6.3
of 37 **sheets**

CADFILE: T:\MNTFM\DOGFTWCBC\4704-00-65\102-77-4704006537\Acad\proto\dyn\set pdf\sheets\Acad\Arch\N5572_A6_3.dwg Pltdtd: Fri, Aug. 07, 2009 @ 1:01 PM By: MBAYZAN

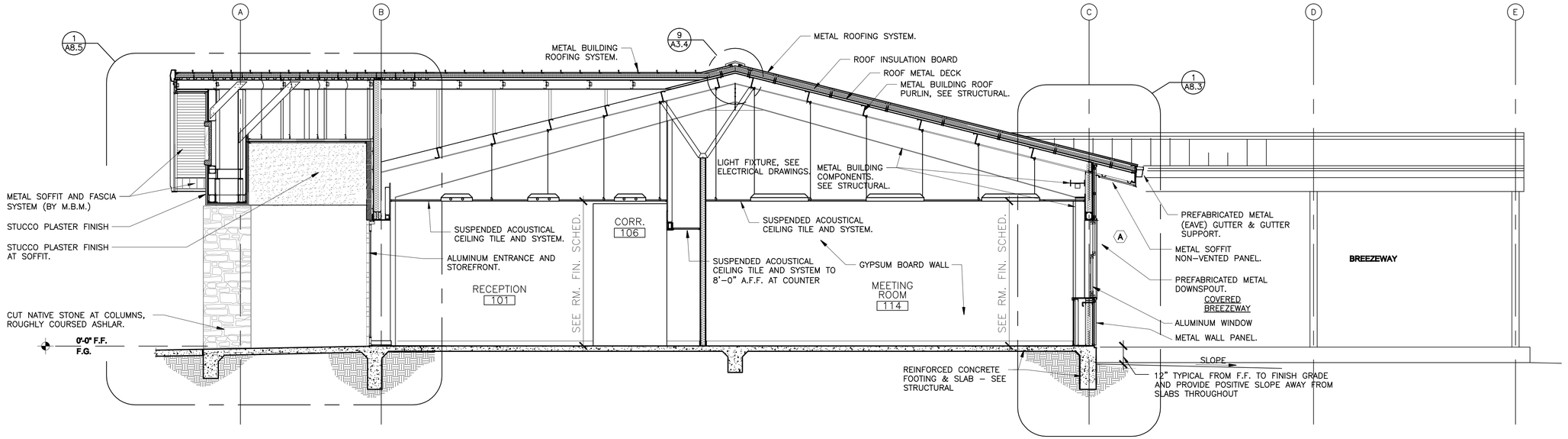

2 BUILDING SECTION - OFFICE
SCALE: 1/4" = 1'-0"

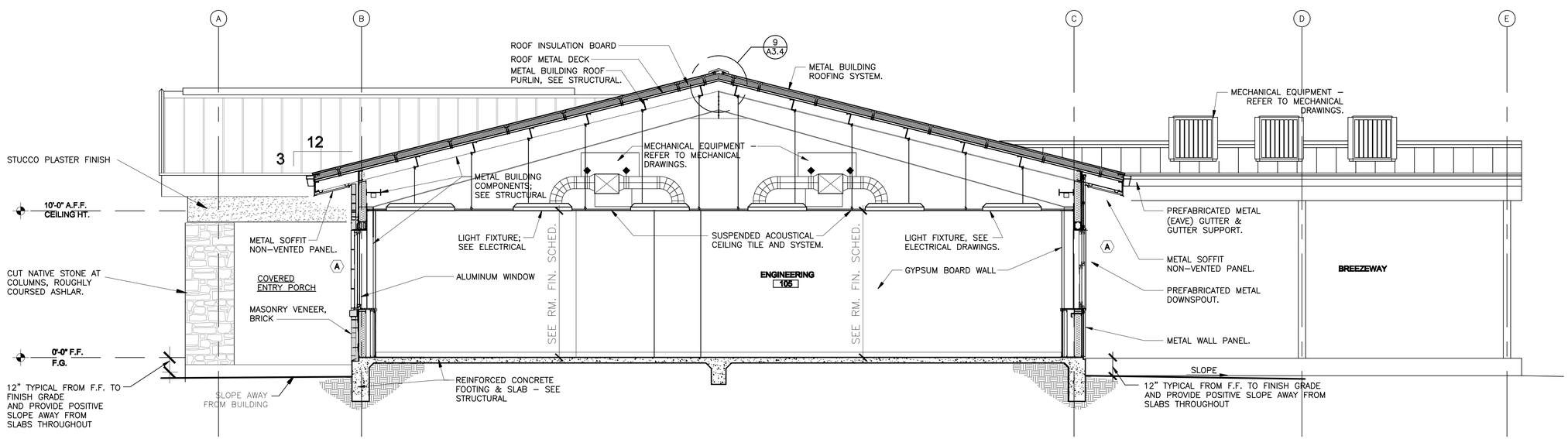

1 BUILDING SECTION - OFFICE
SCALE: 1/4" = 1'-0"

BUILDING SECTIONS - OFFICE

NOTE: THIS DRAWING WAS CREATED FOR PRODUCTION ON 22" x 34" SHEET SIZE. DO NOT SCALE PRINTS.

Texas Department of Transportation
125 E. 11th Street
Austin, Texas 78701-2483
(512) 416-3000

Copyright © 2005 Texas Department of Transportation

THIS DOCUMENT IS RELEASED FOR THE PURPOSE OF
INFORMATION ONLY
NOT FOR REGULATORY
APPROVAL, PERMITTING,
OR CONSTRUCTION.

WACO AREA ENGINEER AND MAINTENANCE FACILITY
WACO, MCLENNAN COUNTY
WACO DISTRICT

Revisions

Drawn by:
KAO/AV
Project No.
CBC4704-00672
Date
05.21.2007
Sheet No.

A7.1
of 37 sheets

CADFILE: T:\MAINTA\D0267TWC\BC4704-00-00\703-77-4704D0267\Acad\projects\typical pdf\waco\Acad\Arch\0672_A7_1.dwg Plotted: Fri, Aug. 07, 2009 @ 1:01 PM By: MBAZAN

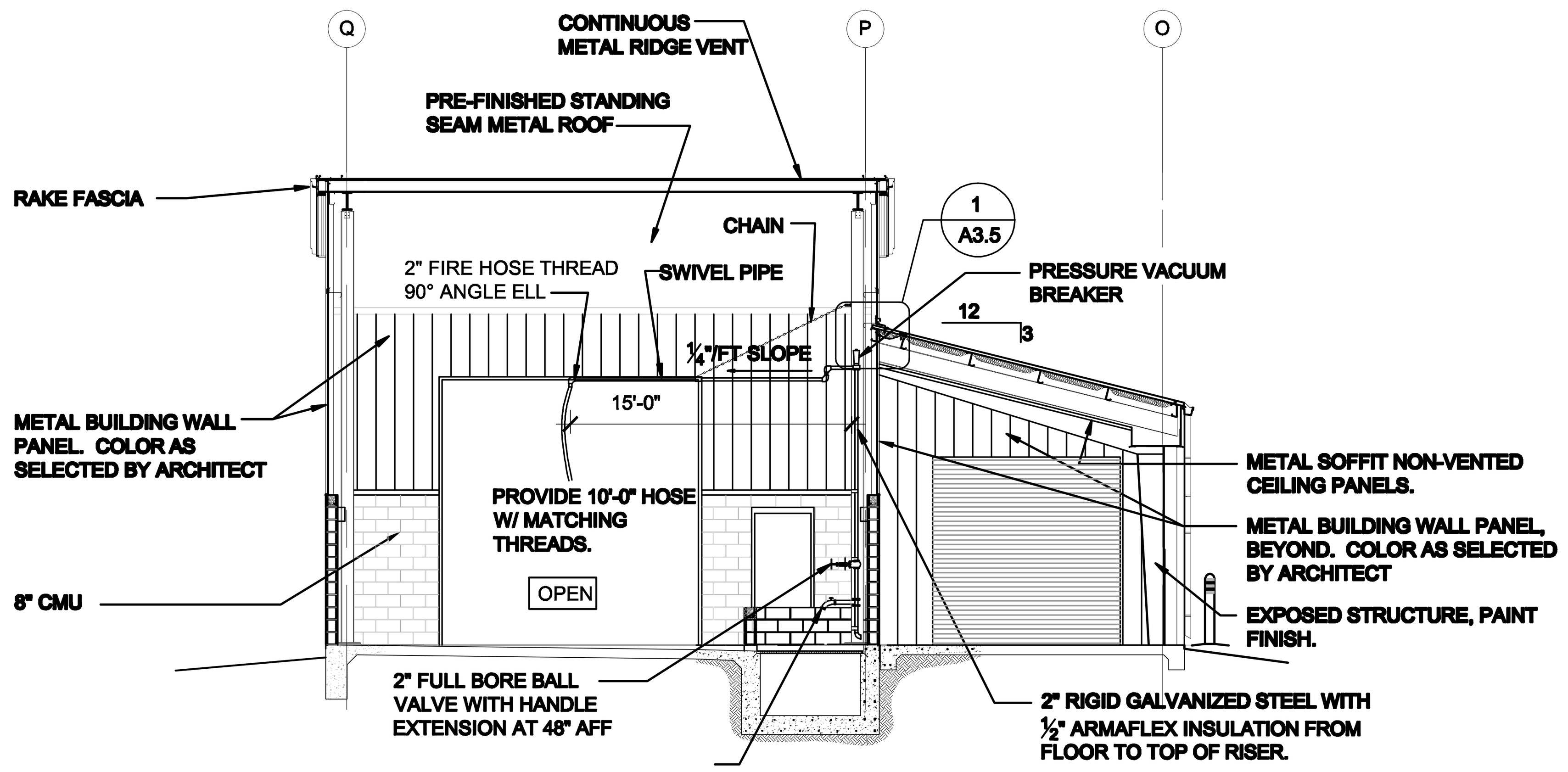

3 BUILDING SECTION AT WASH BAY
SCALE: 1/8" = 1'-0"

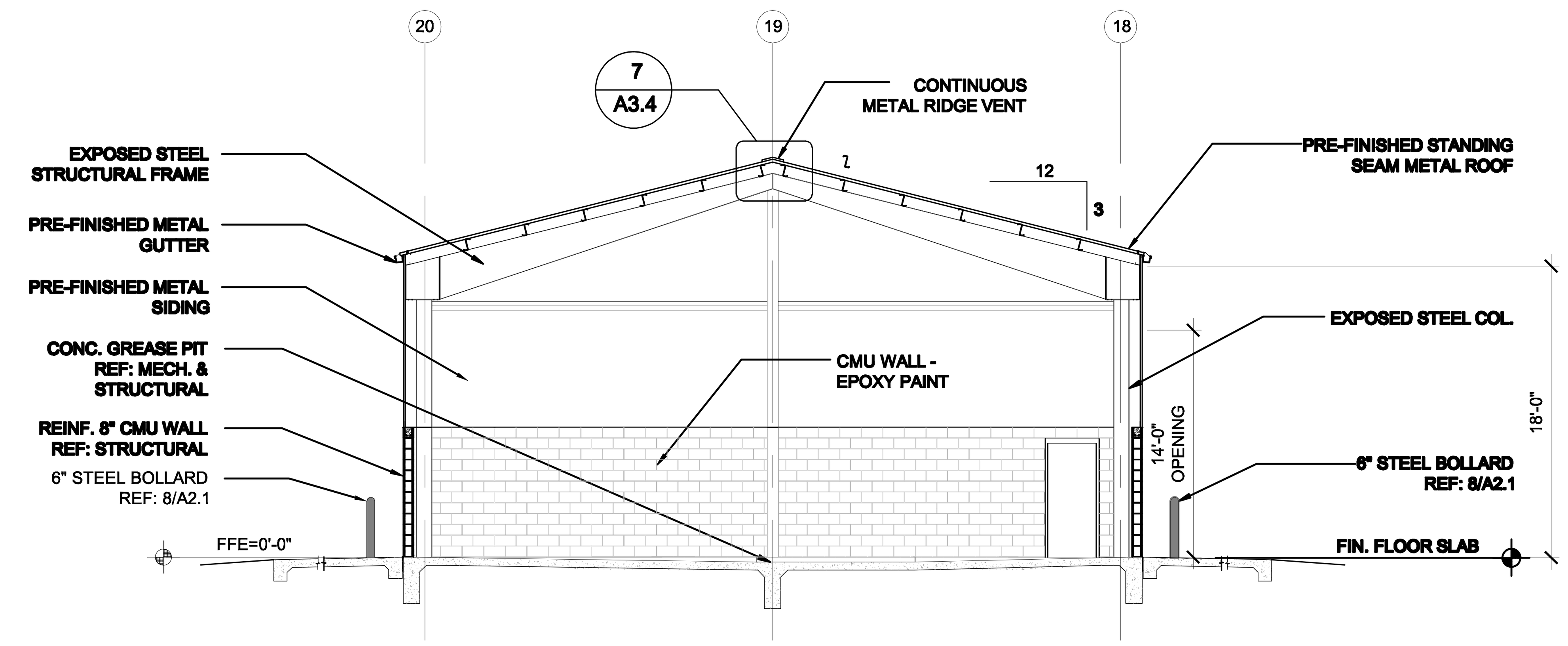

2 BUILDING SECTION AT WASH BAY
SCALE: 1/8" = 1'-0"

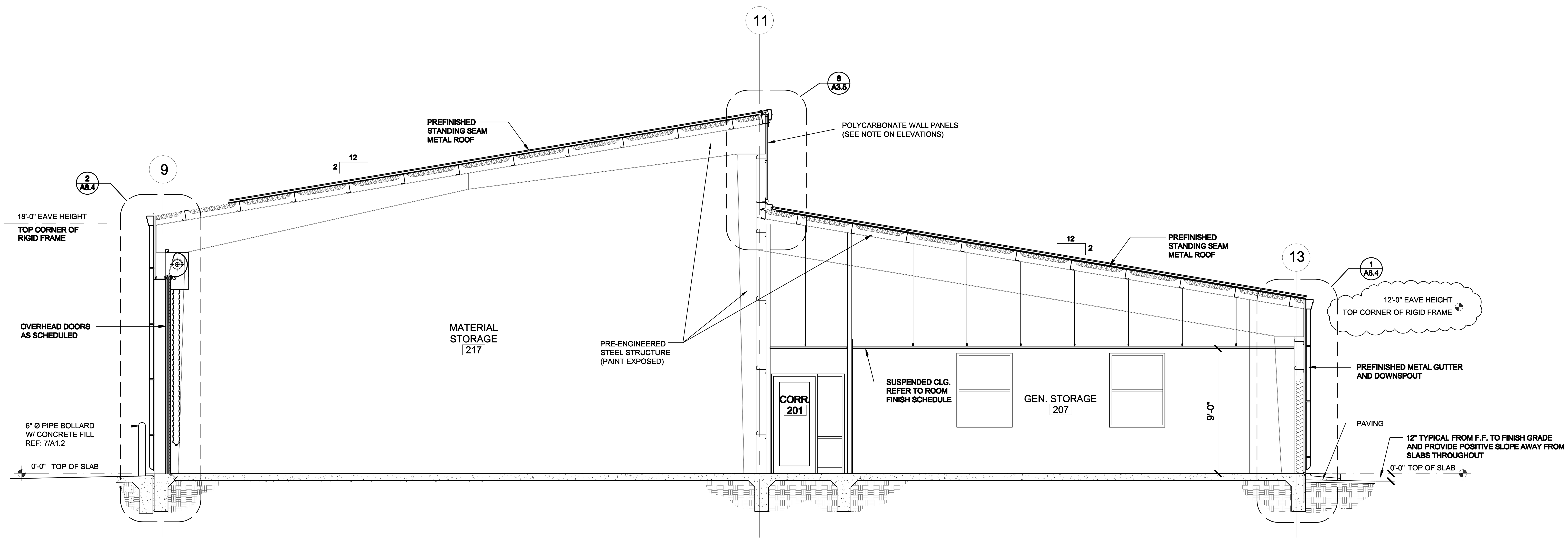

1 BUILDING SECTION - LAB / SHOP
SCALE: 1/4" = 1'-0"

BUILDING SECTIONS - LAB / SHOP & WASH BAY

NOTE: THIS DRAWING WAS CREATED FOR PRODUCTION ON 22" x 34" SHEET SIZE. DO NOT SCALE PRINTS.

CADFILE: T:\MNTFMD02FTW\CBC4704-00-637\02-77-470400637\Acad\prototypical pdfs\waco\Acad\Arch\0672_A7_2.dwg Plotted: Fri. Aug. 07, 2009 @ 1:02 PM By: MBAZAN

Texas Department of Transportation
125 E. 11th Street
Austin, Texas 78701-2483
(512) 416-3048

Copyright © 2005 Texas Department of Transportation

THIS DOCUMENT IS RELEASED FOR THE PURPOSE OF INFORMATION ONLY

NOT FOR REGULATORY APPROVAL, PERMITTING, OR CONSTRUCTION.

WACO AREA ENGINEER AND MAINTENANCE FACILITY

WACO, MCLENNAN COUNTY
WACO DISTRICT

Revisions
1 08/30/07

Drawn by: KAO/EE

Project No. CBC4704-00672

Date 05.21.2007

Sheet No.

A7.2

of 37 sheets

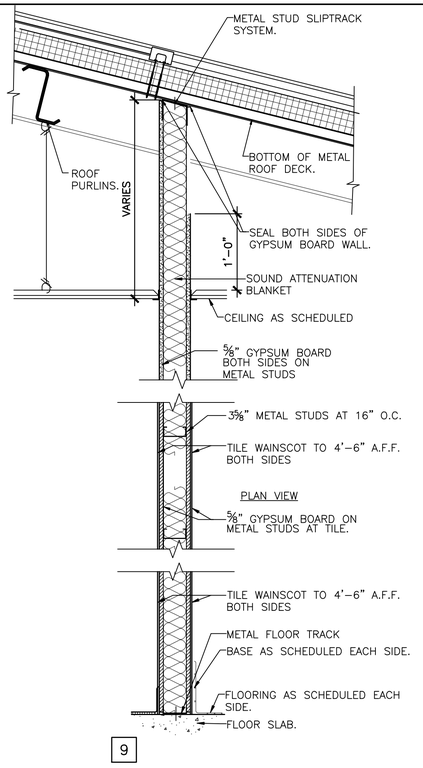

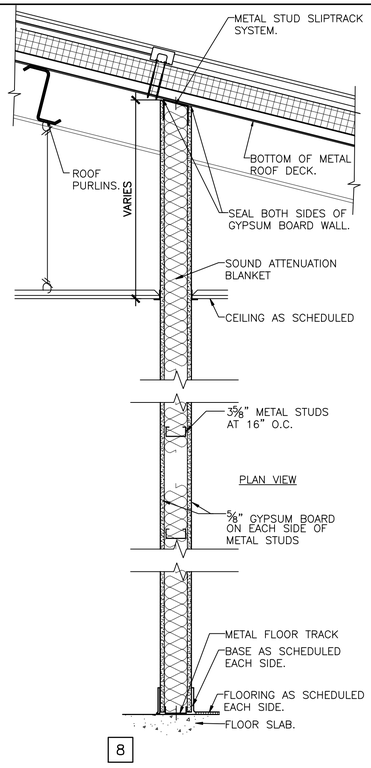

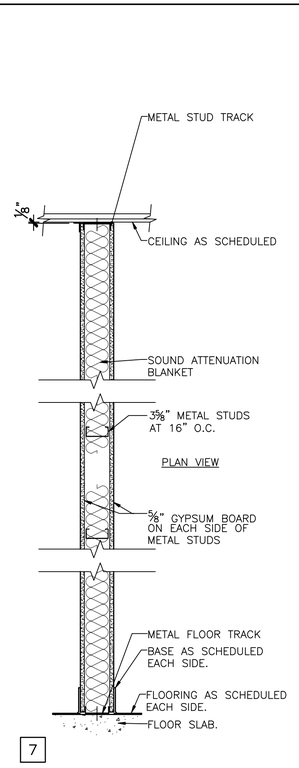

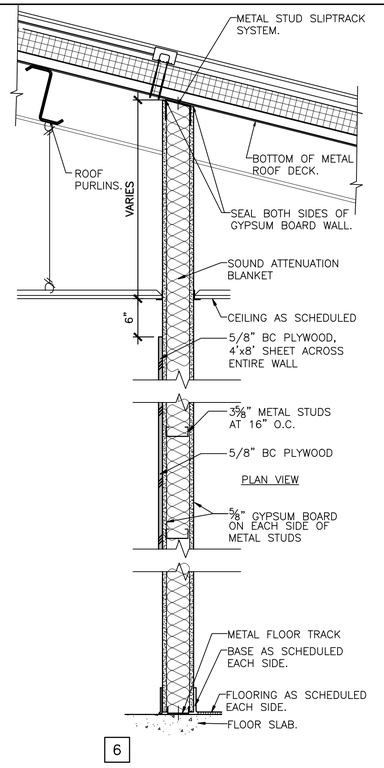

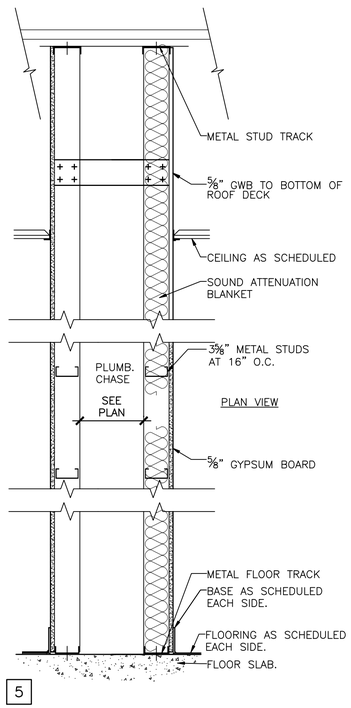

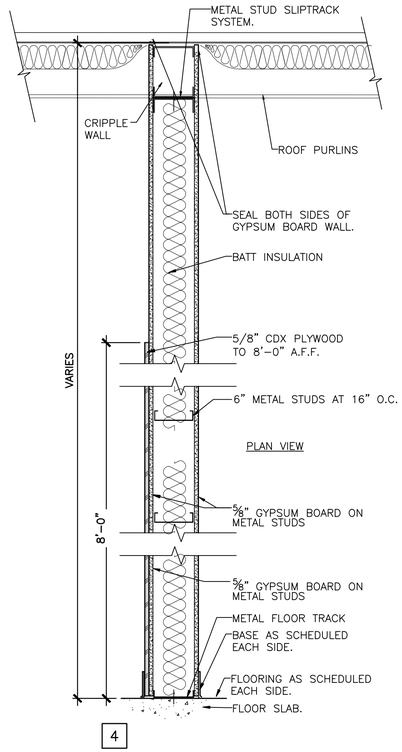

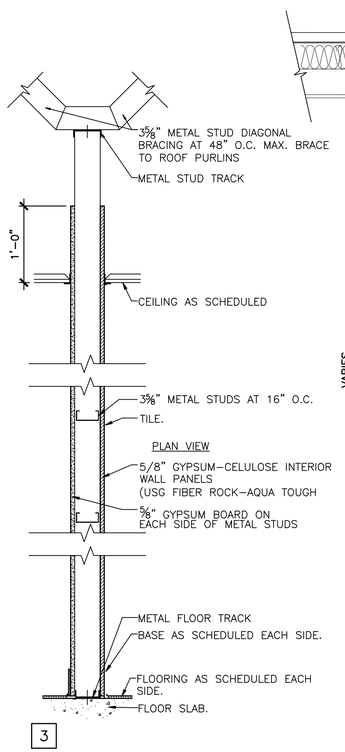

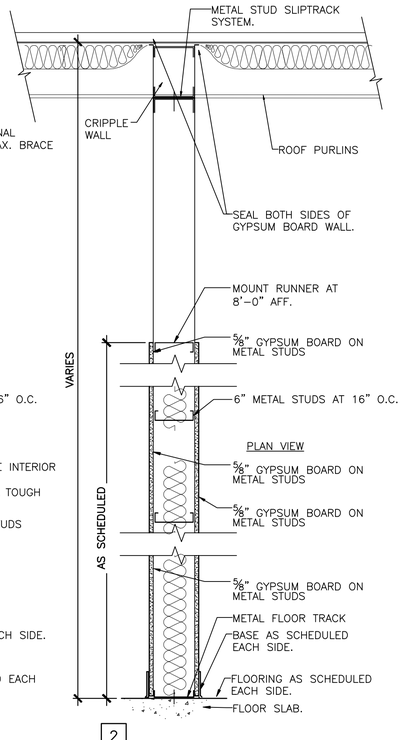

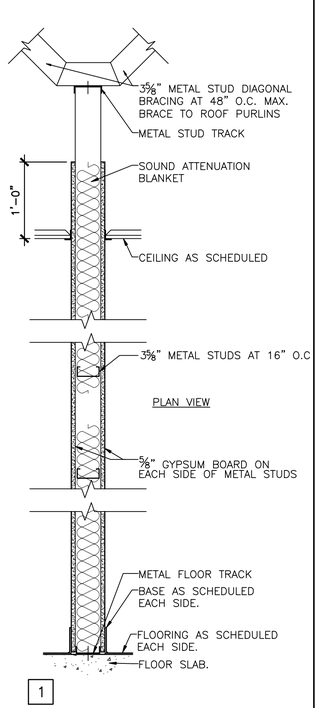

1 ALL PARTITION TYPES
SCALE: 1" = 1'-0"

PARTITION TYPES

NOTE: THIS DRAWING WAS CREATED FOR PRODUCTION ON 22" x 34" SHEET SIZE. DO NOT SCALE PRINTS.

Texas Department of Transportation
125 E. 11th Street
Austin, Texas 78701-2483
(512) 416-2000

Copyright © 2006 Texas Department of Transportation

THIS DOCUMENT IS RELEASED FOR THE PURPOSE OF INFORMATION ONLY
NOT FOR REGULATORY APPROVAL, PERMITTING, OR CONSTRUCTION.

WACO AREA ENGINEER AND MAINTENANCE FACILITY
WACO, MCLENNAN COUNTY
WACO DISTRICT

Revisions

Drawn by: KAO/AV
Project No. CBC4704-00672
Date 05.21.2007
Sheet No.

A8.1
of 37 sheets

CADFILE: T:\MAITW\D06FTWCBC4704-00-6577\02-7-7\704006577\acad\proj\plot pltdrawout\Acad\Arch\06572_A8_1.dwg Plotted: Fri, Aug. 07, 2009 @ 1:22 PM By: MBAZAN

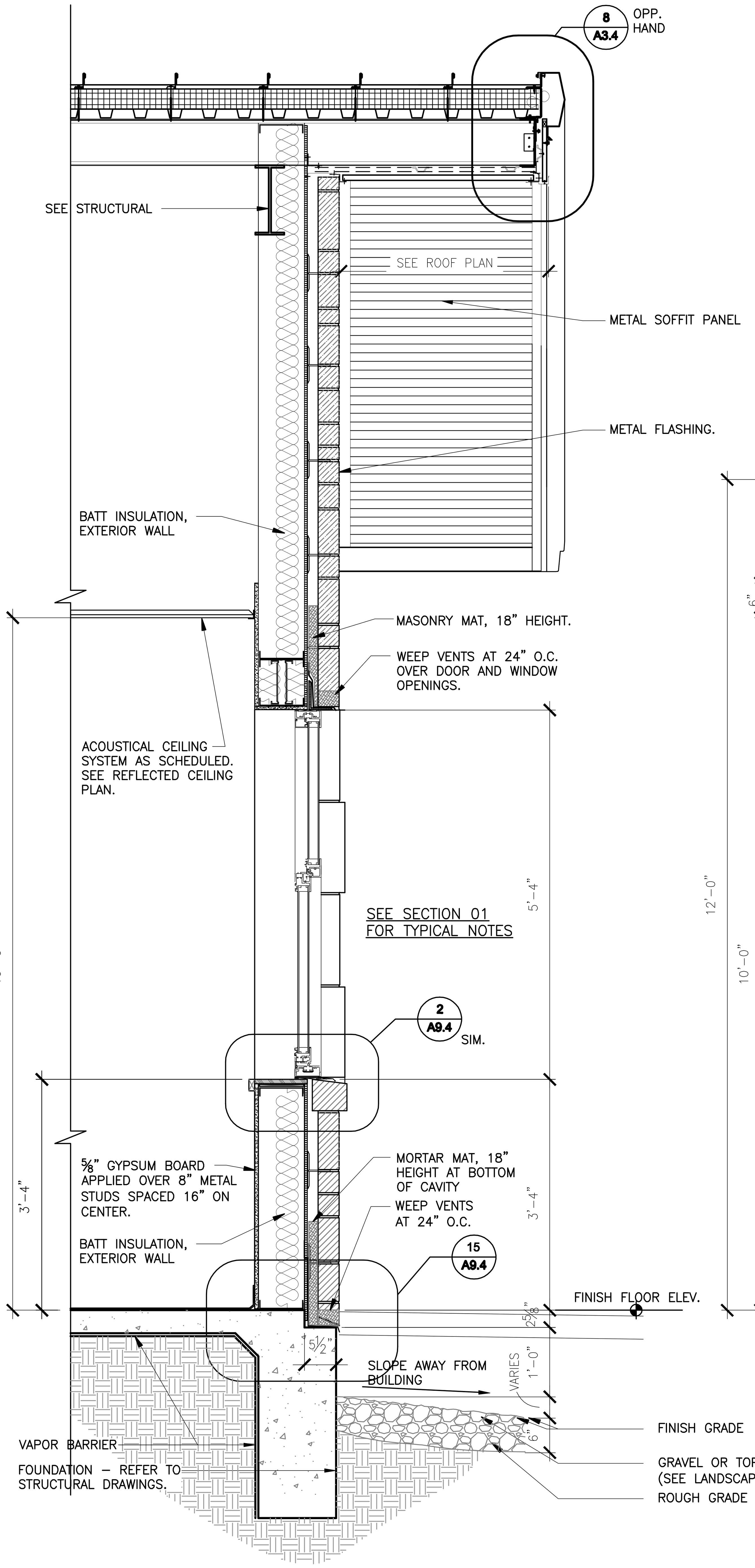

3 END WALL SECTION - OFFICE
SCALE: 3/4" = 1'-0"

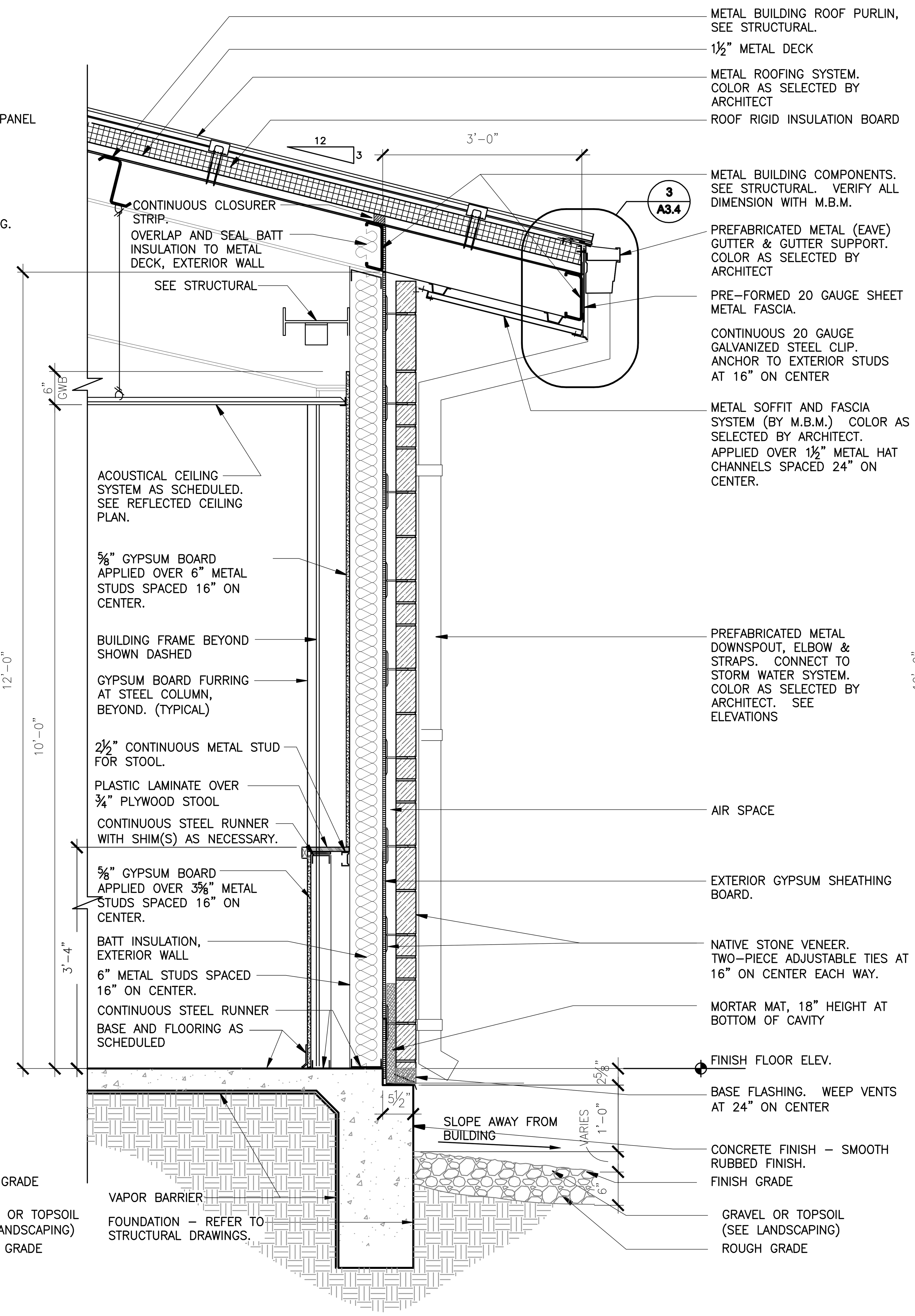

2 WALL SECTION - OFFICE
SCALE: 3/4" = 1'-0"

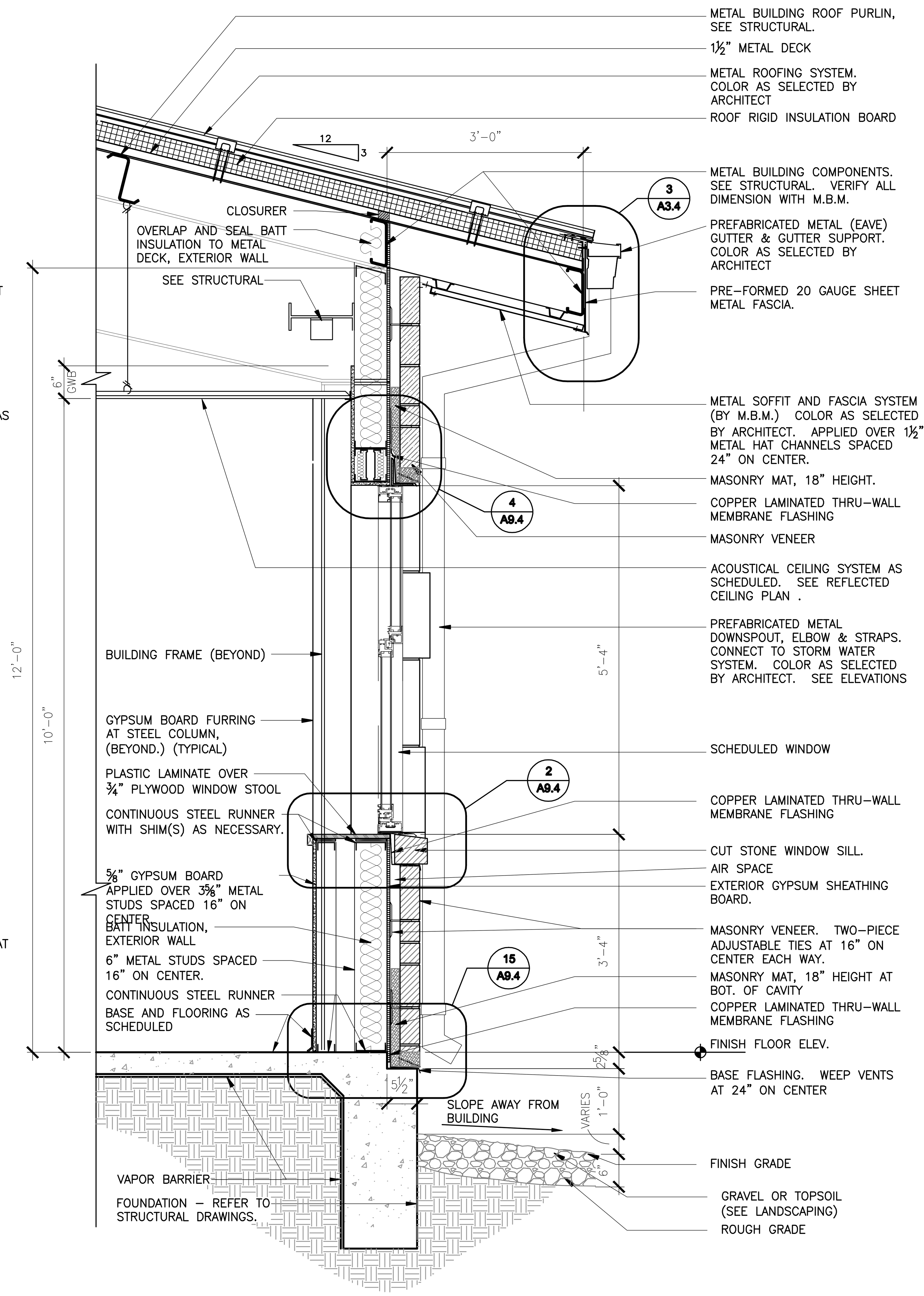

1 WALL SECTION AT WINDOW - OFFICE
SCALE: 3/4" = 1'-0"

WALL SECTIONS

Texas Department of Transportation
125 E. 11th Street
Austin, Texas 78701-2483
(512) 416-2948
Copyright © 2005 Texas Department of Transportation

THIS DOCUMENT IS RELEASED FOR THE PURPOSE OF INFORMATION ONLY
NOT FOR REGULATORY APPROVAL, PERMITTING, OR CONSTRUCTION.

WACO AREA ENGINEER AND MAINTENANCE FACILITY
WACO, MCLENNAN COUNTY WACO DISTRICT

Revisions

Drawn by: KAO/AV
Project No. CBC4704-00672
Date 05.21.2007
Sheet No.
A8.2
of 37 sheets

NOTE: THIS DRAWING WAS CREATED FOR PRODUCTION ON 22" x 34" SHEET SIZE. DO NOT SCALE PRINTS.

CADFILE: T:\MNTFMD\02FT\WCBC4704-00-837\02-77-470400837\Acad\prototypical pdf\waco\Acad\Arch\0672_A8_2.dwg Plotted: Fri, Aug. 07, 2009 @ 1:53 PM By: MBAZAN

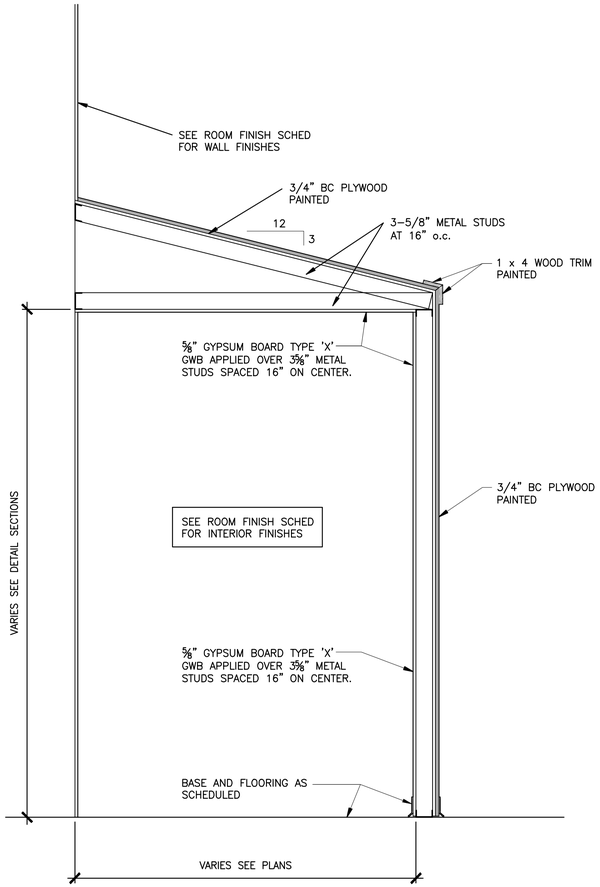

3 WALL SECTION - LAB / SHOP
SCALE: 3/4" = 1'-0"

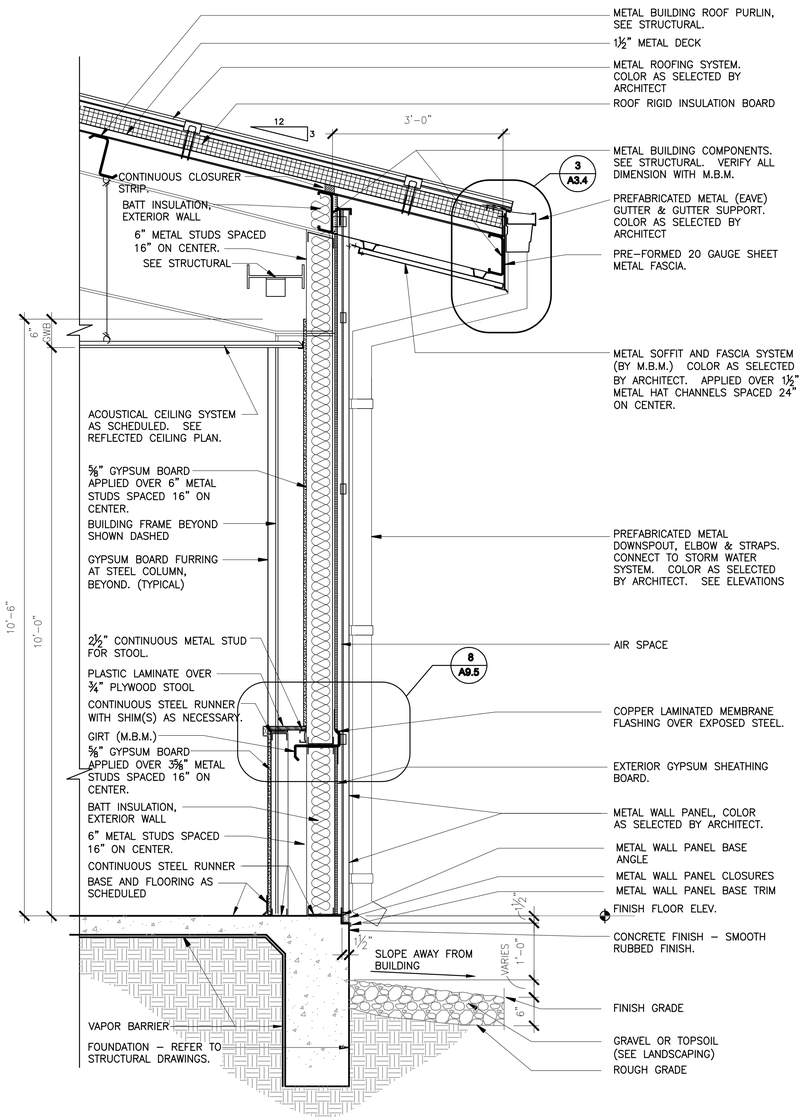

2 WALL SECTION - OFFICE
SCALE: 3/4" = 1'-0"

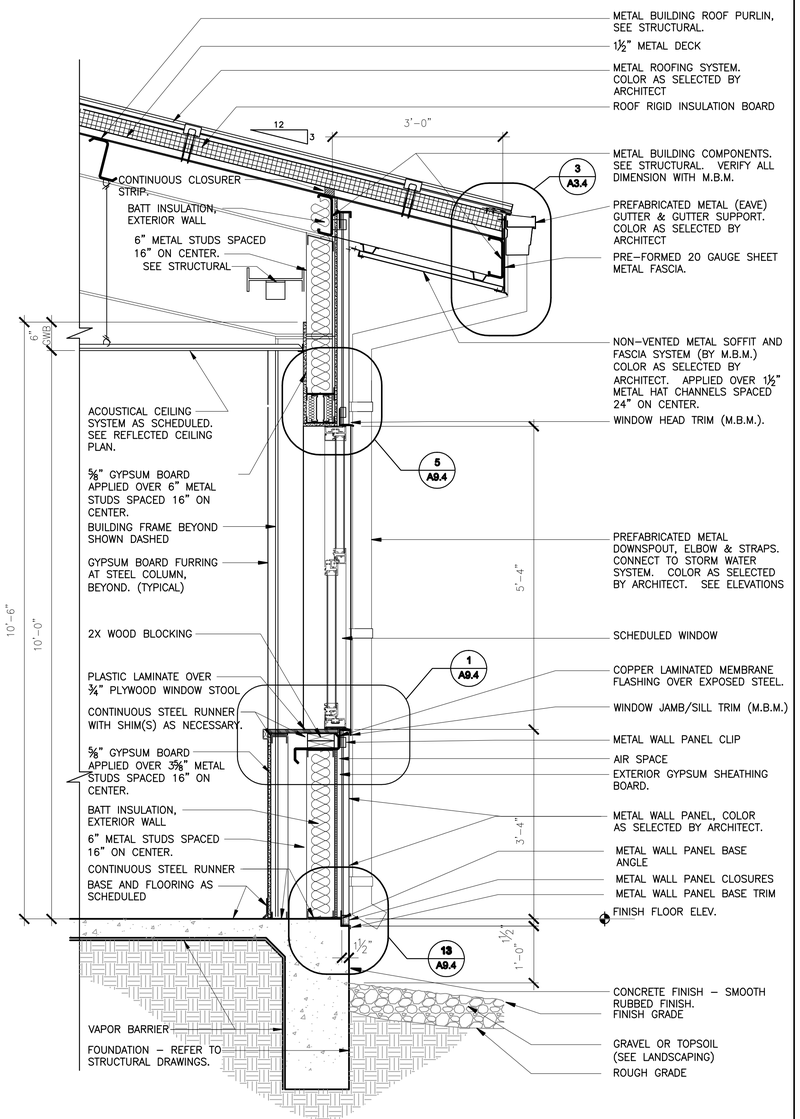

1 WALL SECTION AT WINDOW - OFFICE
SCALE: 3/4" = 1'-0"

WALL SECTIONS

NOTE: THIS DRAWING WAS CREATED FOR PRODUCTION ON 22" x 34" SHEET SIZE. DO NOT SCALE PRINTS.

CADFILE: T:\ANITRA\DGZ\TWC\CBC4704-00-05\102-77-4704005\TWC\cad\print\dgn\sht pdf\texas\Aces\Arch\A0572_A8_3.dwg Plotted: Fri, Aug. 07, 2009 @ 1:39 PM By: MBAZAN

Texas Department of Transportation
125 E. 11th Street
Austin, Texas 78701-2483
(512) 416-2000

Copyright © 2005 Texas Department of Transportation

THIS DOCUMENT IS RELEASED FOR THE PURPOSE OF
INFORMATION ONLY
NOT FOR REGULATORY
APPROVAL, PERMITTING,
OR CONSTRUCTION.

WACO AREA ENGINEER AND MAINTENANCE FACILITY
WACO, MCLENNAN COUNTY
WACO DISTRICT

Revisions

Drawn by: KAO/AV
Project No. CBC4704-00672
Date 05.21.2007
Sheet No.

A8.3
of 37 sheets

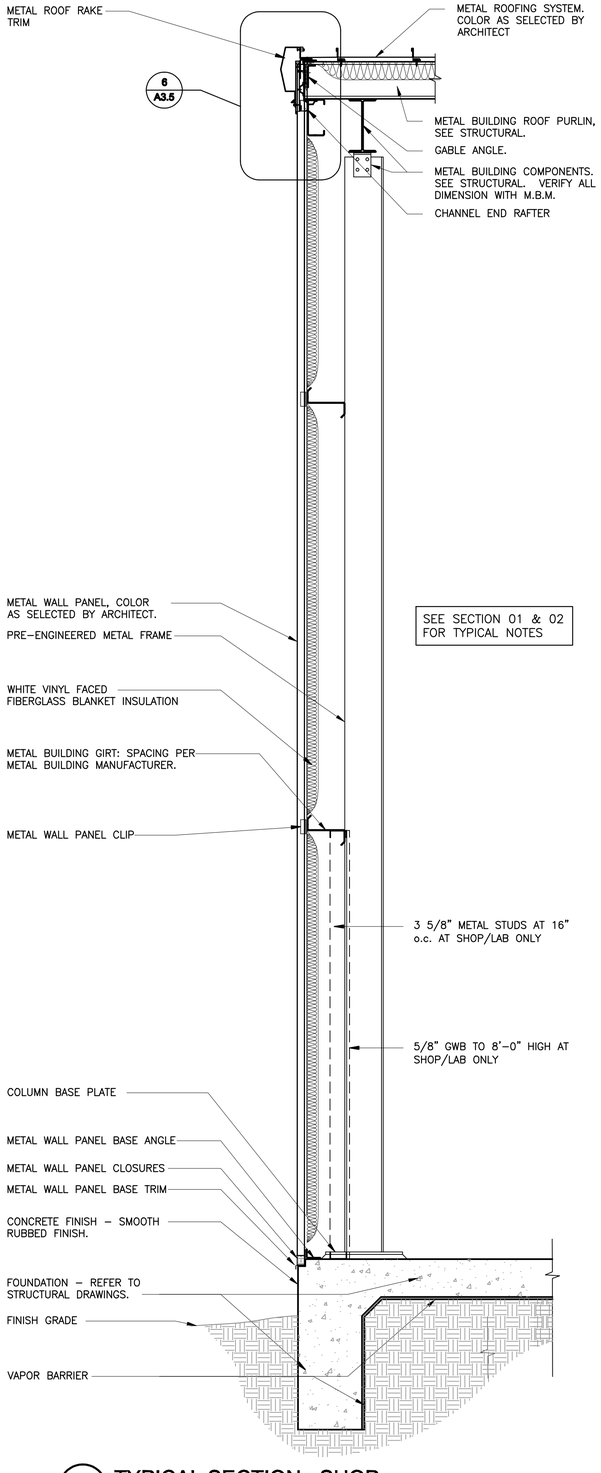

3 TYPICAL SECTION - SHOP
SCALE: 3/4" = 1'-0"

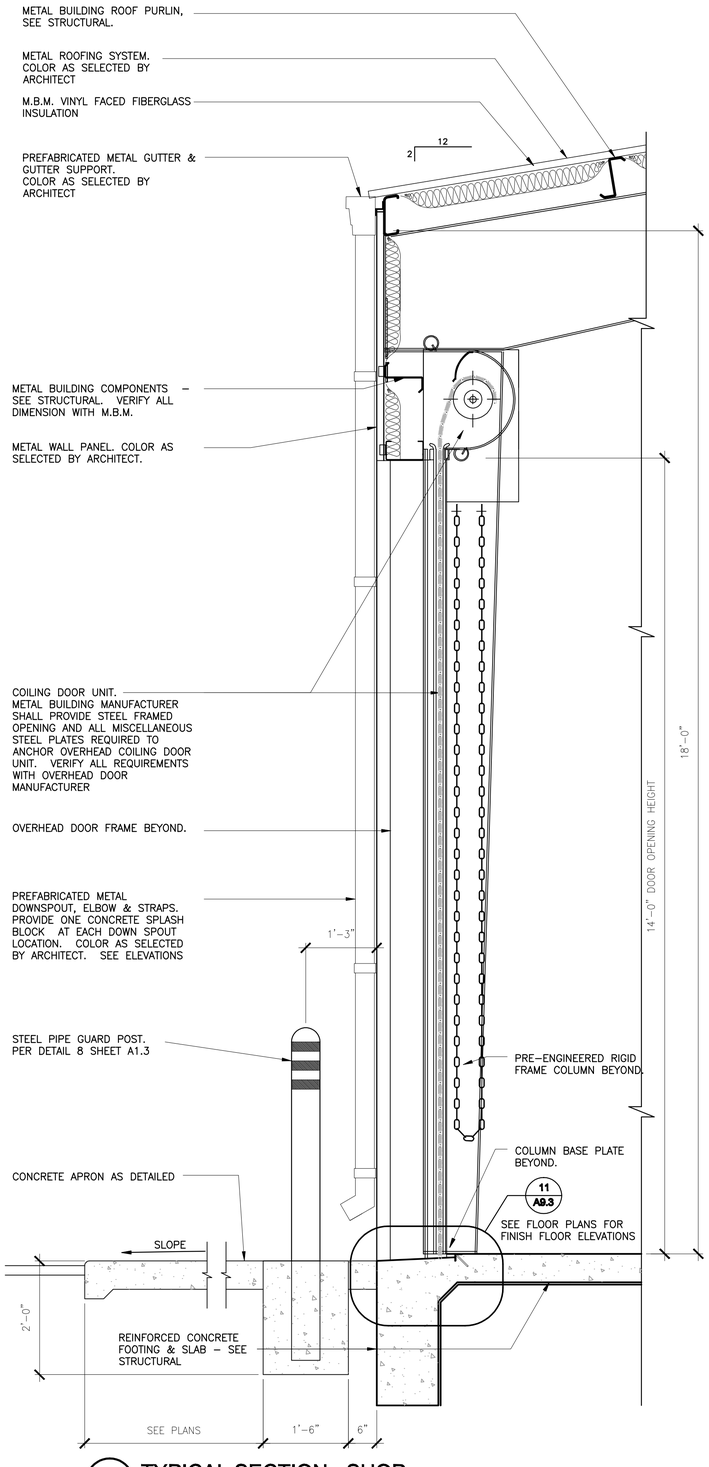

2 TYPICAL SECTION - SHOP
SCALE: 3/4" = 1'-0"

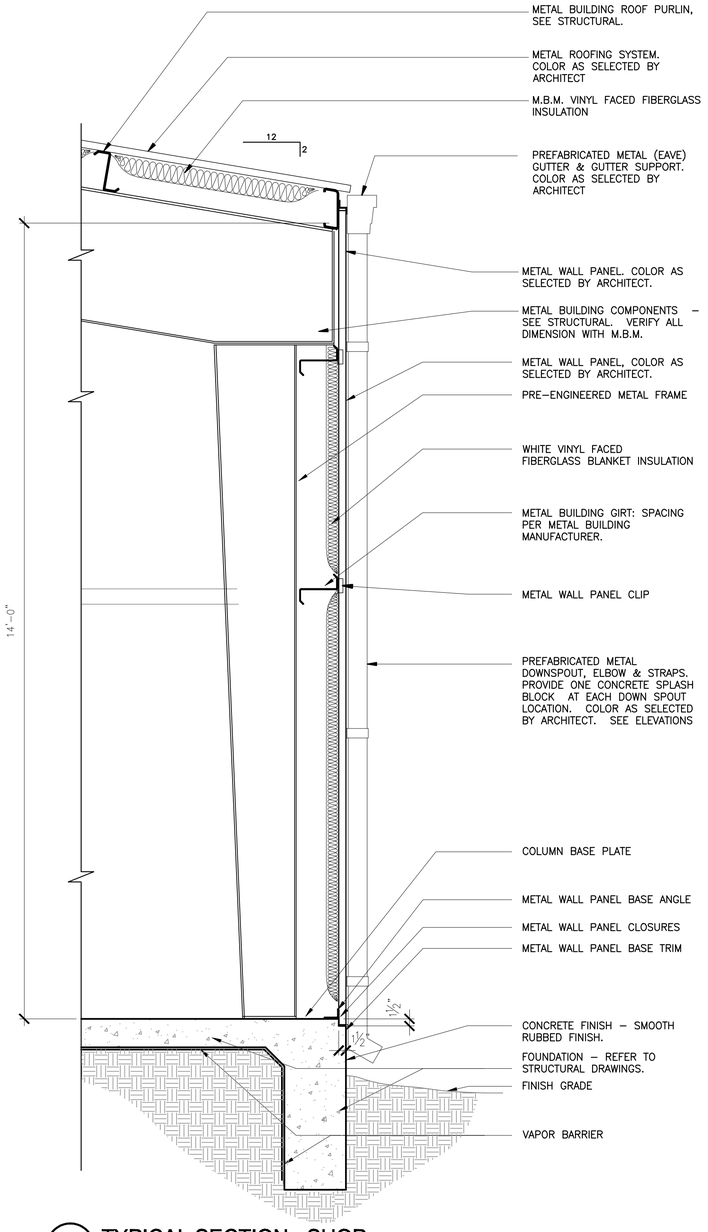

1 TYPICAL SECTION - SHOP
SCALE: 3/4" = 1'-0"

WALL SECTIONS

NOTE: THIS DRAWING WAS CREATED FOR PRODUCTION ON 22" x 34" SHEET SIZE. DO NOT SCALE PRINTS.

Texas Department of Transportation
125 E. 11th Street
Austin, Texas 78701-2483
(512) 416-2000

Copyright © 2005 Texas Department of Transportation

THIS DOCUMENT IS RELEASED FOR THE PURPOSE OF
INFORMATION ONLY
NOT FOR REGULATORY
APPROVAL, PERMITTING,
OR CONSTRUCTION.

WACO AREA ENGINEER AND MAINTENANCE FACILITY
WACO, MCLENNAN COUNTY
WACO DISTRICT

Revisions

Drawn by: KAO/AV
Project No. CBC4704-00672
Date 05.21.2007
Sheet No.

A8.4
of 37 sheets

CADFILE: T:\MNTFM\D20GFTWCBC4704-00-837\03-77-4704008371\ead\prod\plotd pdf\sheets\Arch\00672_A8_4.dwg Plotted: Fri, Aug. 07, 2009 @ 1:24 PM By: MBAZAN

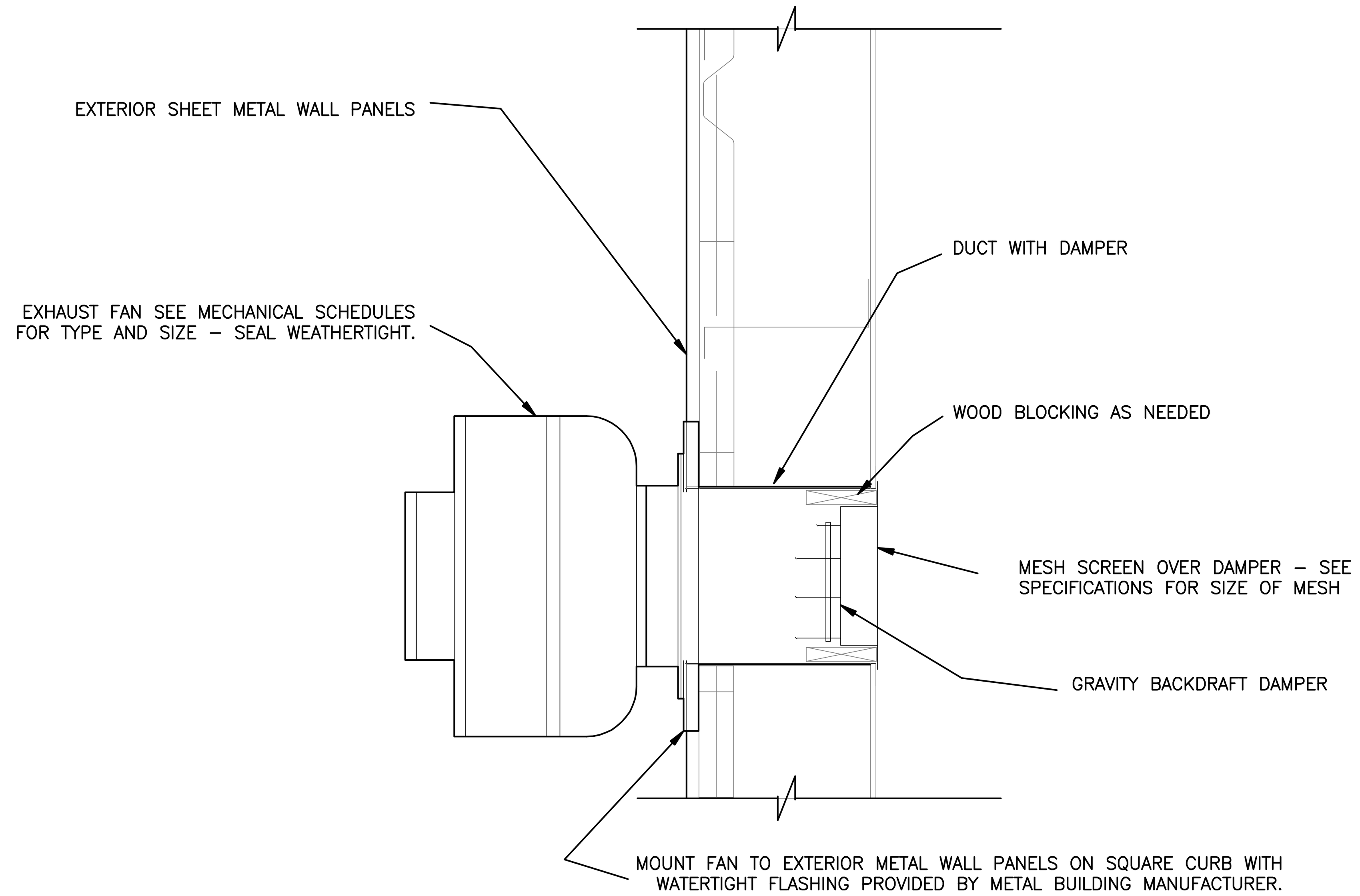

2 WALL SECTION - EXHAUST FAN
SCALE: 3/4" = 1'-0"

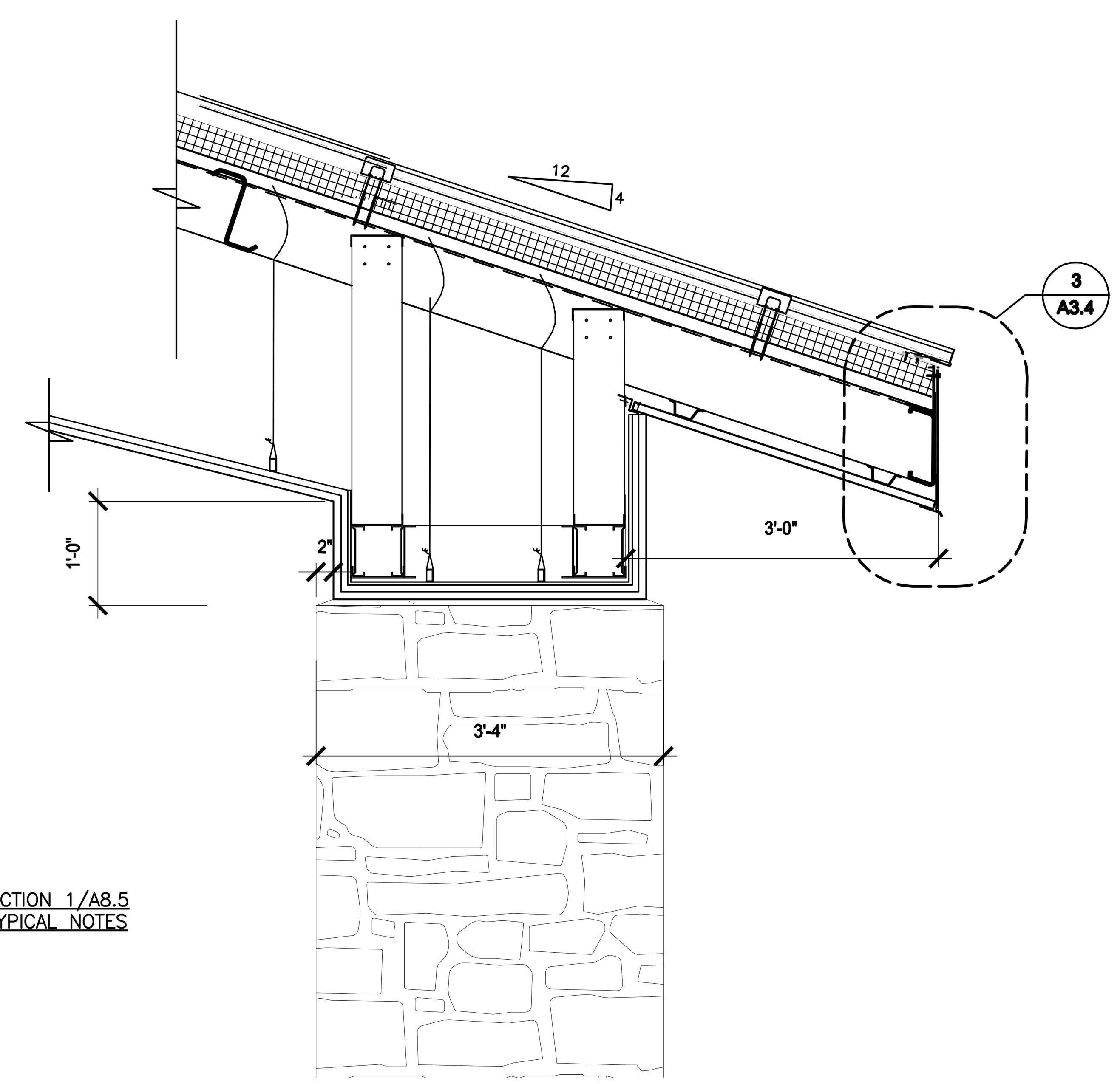

SEE SECTION 1/A8.5 FOR TYPICAL NOTES

3 WALL SECTION - ENTRANCE
SCALE: 3/4" = 1'-0"

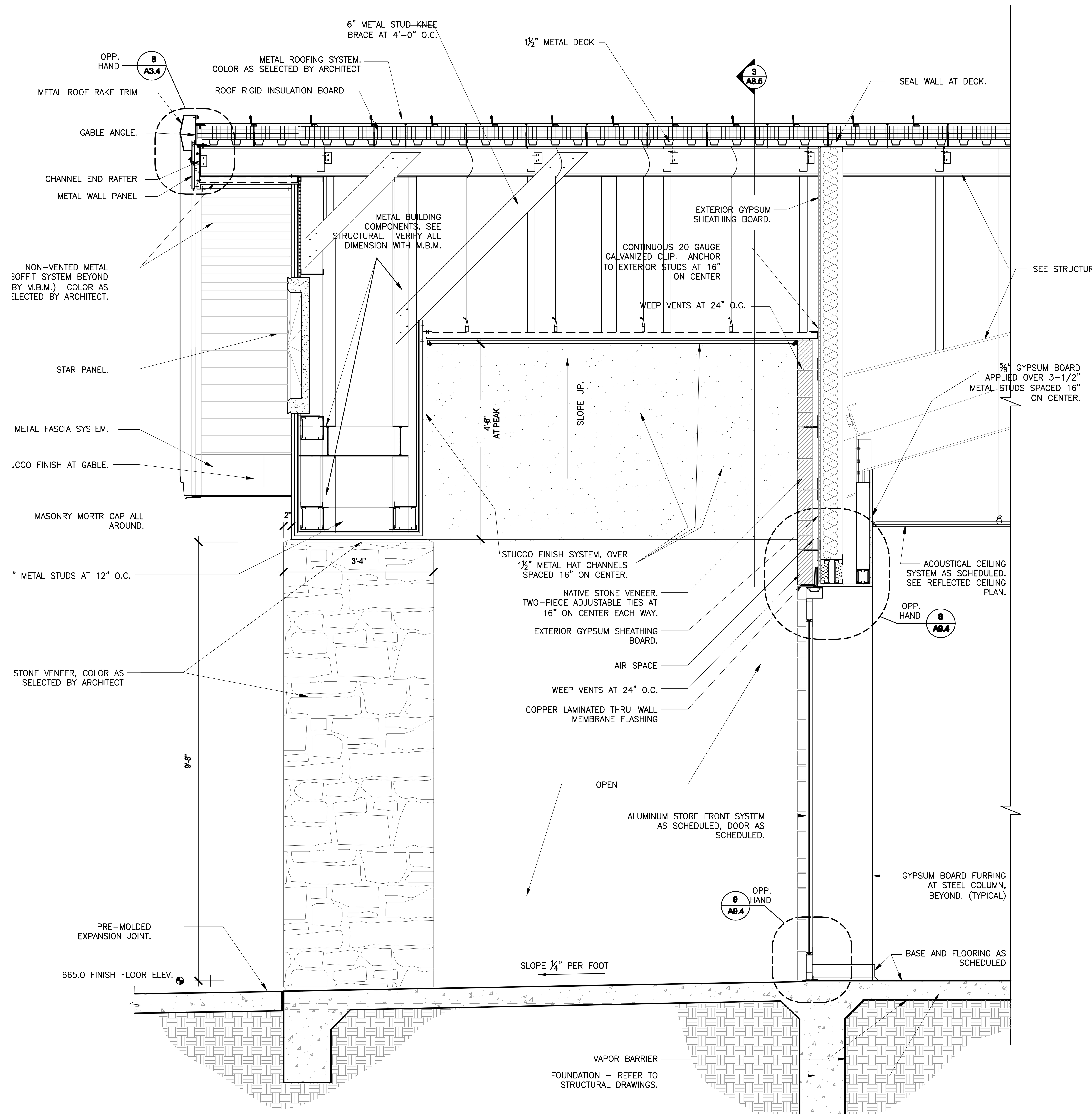

1 WALL SECTION - ENTRANCE
SCALE: 3/4" = 1'-0"

CADFILE: T:\MNTFMD\02FTW\CBC4704-00-837\02-77-47040083\7\Acad\prototypical pdfs\waco\Acad\Arch\0672_A8_5.dwg Plotted: Fri, Aug. 07, 2009 @ 1:04 PM By: MBAZAN

Texas Department of Transportation
125 E. 11th Street
Austin, Texas 78701-2483
(512) 416-2040
Copyright © 2005 Texas Department of Transportation

THIS DOCUMENT IS RELEASED FOR THE PURPOSE OF INFORMATION ONLY
NOT FOR REGULATORY APPROVAL, PERMITTING, OR CONSTRUCTION.

WACO AREA ENGINEER AND MAINTENANCE FACILITY
WACO, MCLENNAN COUNTY WACO DISTRICT

Revisions

Drawn by: KAO/AV
Project No. CBC4704-00672
Date 05.21.2007
Sheet No.
A8.5
of 37 sheets

WALL SECTIONS

NOTE: THIS DRAWING WAS CREATED FOR PRODUCTION ON SHEET SIZE. DO NOT SCALE PRINTS.

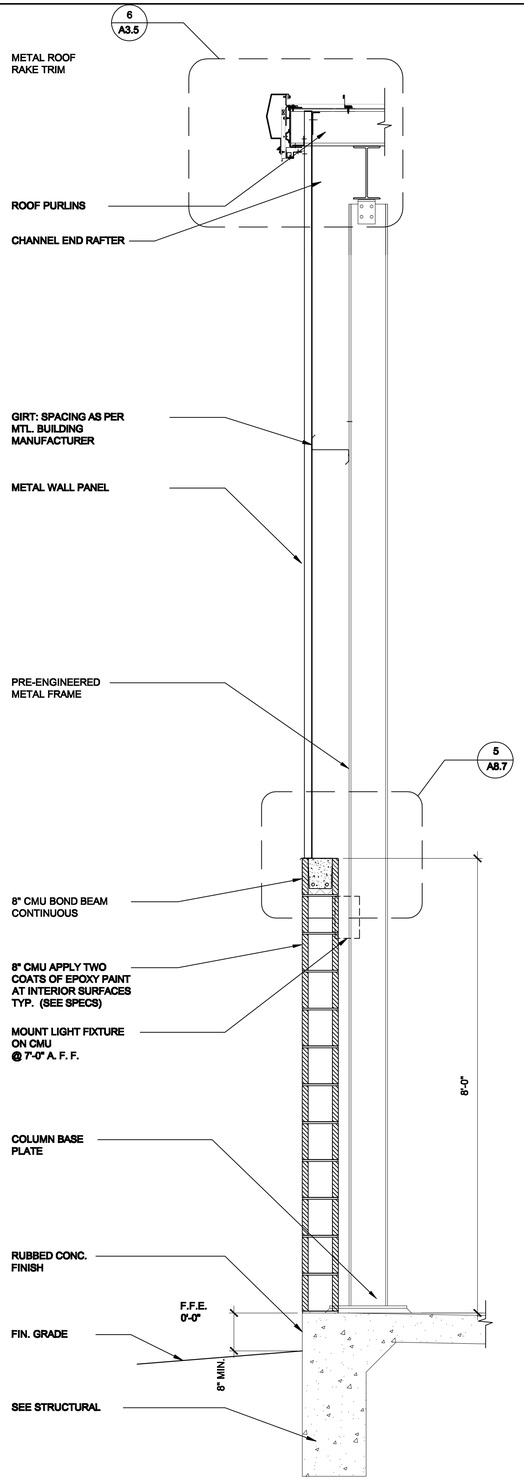

3 WALL SECTION
SCALE: 3/4"= 1'-0"

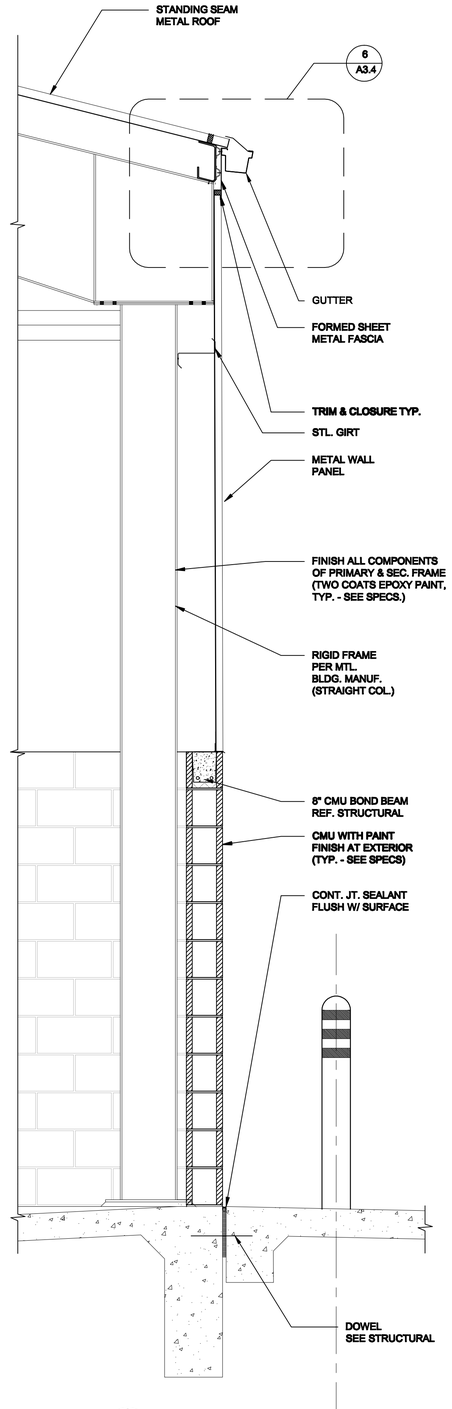

2 WALL SECTION
SCALE: 3/4"= 1'-0"

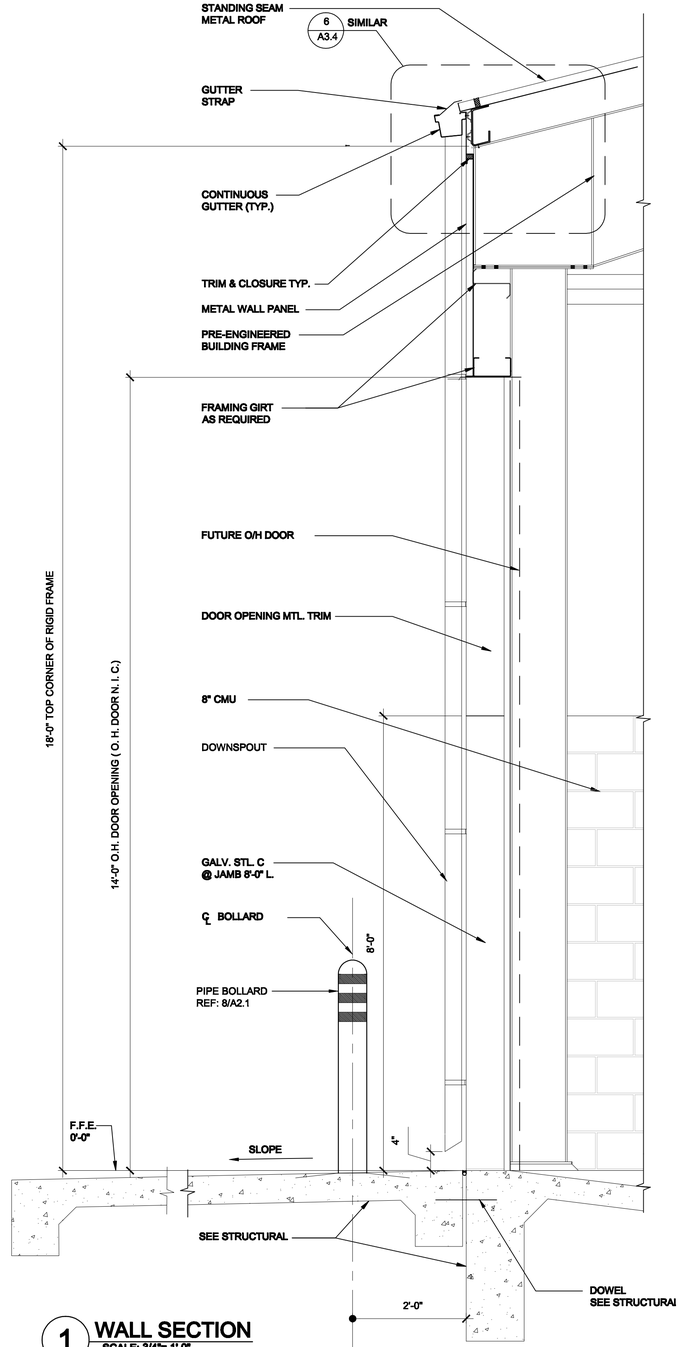

1 WALL SECTION
SCALE: 3/4"= 1'-0"

WALL SECTIONS / DETAILS - WASH BAY

NOTE: THIS DRAWING WAS CREATED FOR PRODUCTION ON 22" x 34" SHEET SIZE. DO NOT SCALE PRINTS.

Texas Department of Transportation
125 E. 11th Street
Austin, Texas 78701-2483
(512) 416-3000

Copyright © 2005 Texas Department of Transportation

THIS DOCUMENT IS RELEASED FOR THE PURPOSE OF
INFORMATION ONLY
NOT FOR REGULATORY
APPROVAL, PERMITTING,
OR CONSTRUCTION.

WACO AREA ENGINEER
AND MAINTENANCE FACILITY
WACO, MCLENNAN COUNTY
WACO DISTRICT

Revisions

Drawn by:
S. F.
Project No.
CBC4704-00672
Date
05.21.2007
Sheet No.

A8.6
of 37 sheets

CADFILE: T:\ANTRAD\D2FTW\CBC4704-00-00\103-77-4704008370\Acad\print\dgn\sht pdf\Waco\Acad\Arch\00672_A8_6.dwg Pltlist: Pkt, Aug. 07, 2009 @ 1:34 PM By: MBAZAN

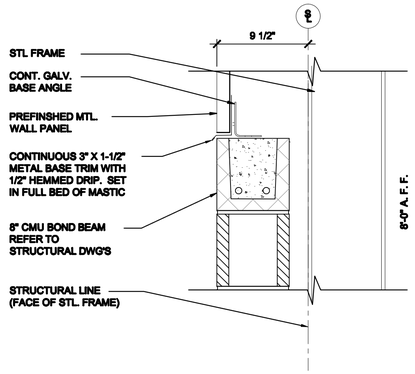

5 WALL DETAIL
SCALE: 1 1/2"= 1'-0"

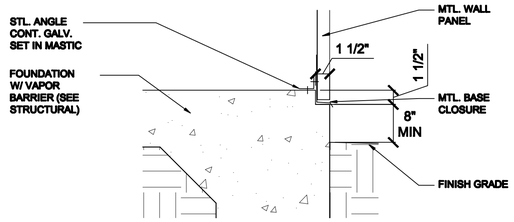

4 WALL DETAIL
SCALE: 1 1/2"= 1'-0"

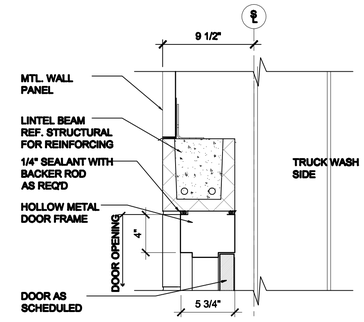

6 DOOR HEAD
SCALE: 1 1/2"= 1'-0"

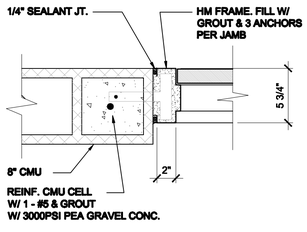

8 DOOR JAMB
SCALE: 1 1/2"= 1'-0"

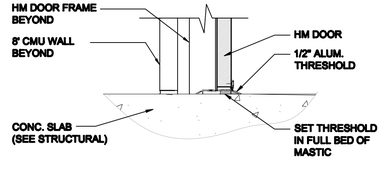

10 DOOR SILL
SCALE: 1 1/2"= 1'-0"

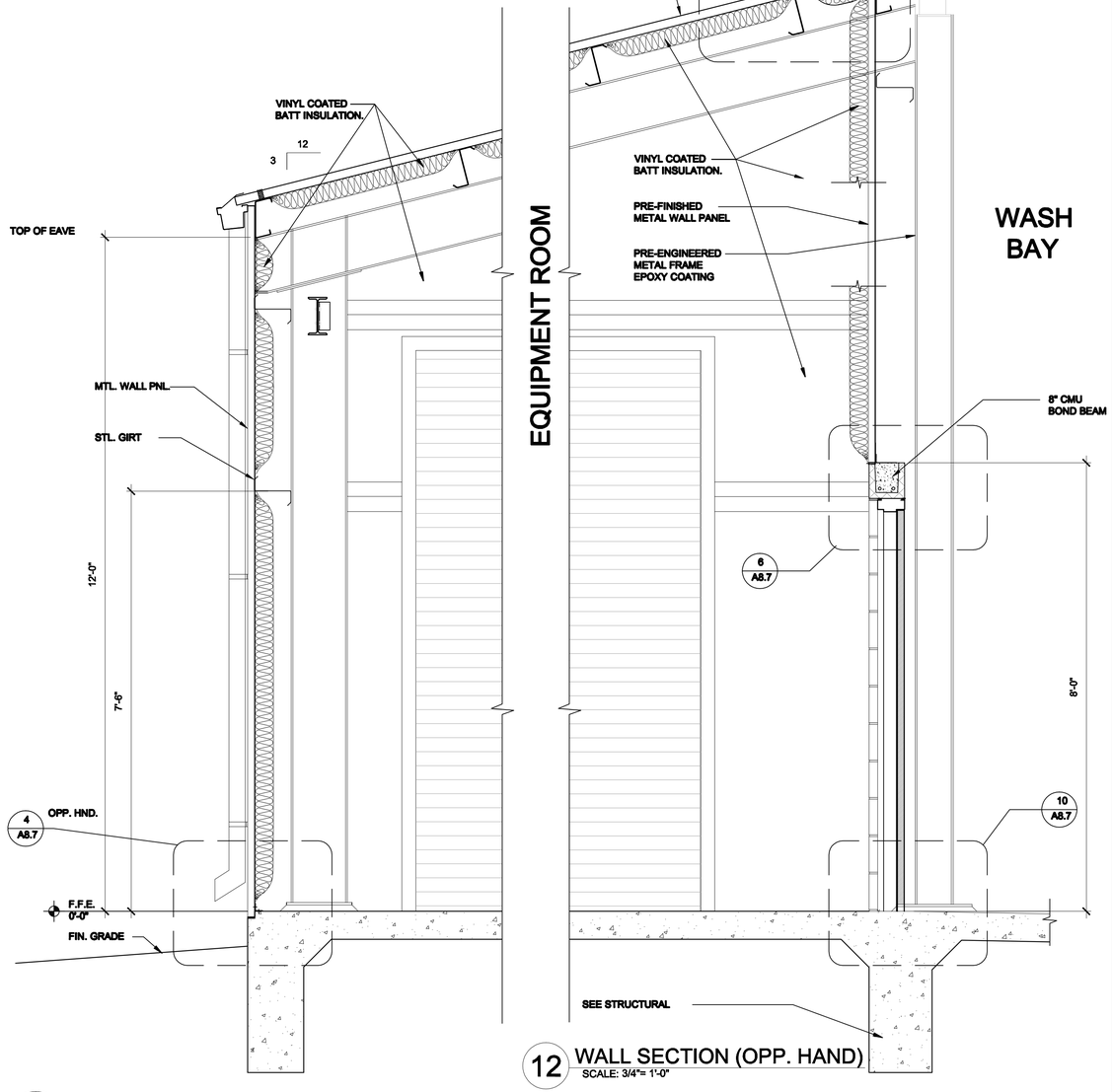

11 WALL SECTION (OPP. HAND)
SCALE: 3/4"= 1'-0"

12 WALL SECTION (OPP. HAND)
SCALE: 3/4"= 1'-0"

WALL SECTIONS / DETAILS - WASH BAY

NOTE: THIS DRAWING WAS CREATED FOR PRODUCTION ON 22" x 34" SHEET SIZE. DO NOT SCALE PRINTS.

CADFILE: T:\MAITR\DGN\CBC4704-00-857002-77-4704008370\acad\projects\plan pdf\waco\Acad\Arch\0672_A8_7.dwg Plotted: Fri, Aug. 07, 2009 @ 1:35 PM By: MBAZAN

Texas Department of Transportation
125 E. 11th Street
Austin, Texas 78701-2483
(512) 416-3000
Copyright © 2005 Texas Department of Transportation

THIS DOCUMENT IS RELEASED FOR THE PURPOSE OF
INFORMATION ONLY
NOT FOR REGULATORY
APPROVAL, PERMITTING,
OR CONSTRUCTION.

WACO AREA ENGINEER
AND MAINTENANCE FACILITY
WACO, MCLENNAN COUNTY
WACO DISTRICT

Revisions

Drawn by:
KAO/SF
Project No.
CBC4704-00672
Date
05.21.2007
Sheet No.

A8.7
of 37 sheets

KEY TO ROOM FINISH SCHEDULE

FLOOR	BASE	WALLS	CEILING
F1 SEALED CONCRETE F2 12" X 12" VINYL COMPOSITION TILE F3 1" x 1" CERAMIC TILE	B1 4" RUBBER BASE B2 NOT USED B3 CERAMIC TILE – COVED	W1 GYPSUM BOARD – PAINTED W2 USG FIBEROCK 5/8" AQUA TOUGH WALL PANELS W3 2" x 2" – 56" HT. GLAZED CERAMIC TILE WAINSCOT– EPOXY PAINT WAILL BOARD ABOVE W4 PAINTED PLYWOOD TO 8' AFF W5 EXPOSED STRUCTURE W6 USG FIBEROCK 5/8" ABUSE RESISTANT PANELS	C1 2' x 2' ACOUSTICAL TILE "A" C2 GYPSUM BOARD – PAINTED C3 EXPOSED STRUCTURE C4 2' x 2' ACOUSTICAL TILE "B"

SCHEDULE OF ROOM FINISHES

	ROOM NO.	ROOM NAME	FLOOR	BASE	WALLS NORTH	WALLS EAST	WALLS SOUTH	WALLS WEST	CEILING MTL.	CEILING HT.	REMARKS
OFFICE BUILDING	101	RECEPTION	F 2	B 1	W 1	W 1	W 1	W 1	C 1	10'–0"	
	102	RECORD STORAGE	F 2	B 1	W 1	W 1	W 1	W 1	C 1	9'–0"	
	103	ASSISTANT ENGINEER	F 2	B 1	W 1	W 1	W 1	W 1	C 1	9'–0"	
	104	AREA ENGINEER	F 2	B 1	W 1	W 1	W 1	W 1	C 1	9'–0"	
	105	ENGINEERING	F 2	B 1	W 1	W 1	W 1	W 1	C 1	10'–0"	
	106	CORRIDOR	F 2	B 1	W 1	W 1	W 1	W 1	C 1	10'–0"	NOTE 4
	107	CORRIDOR	F 2	B 1	W 1	W 1	–	W 1	C 1	10'–0"	
	108	CONFERENCE ROOM	F 2	B 1	W 1	W 1	W 1	W 1	C 1	9'–0"	NOTE 2
	109	SUPPLY / COPY	F 2	B 1	W 1	W 1	W 1	W 1	C 1	9'–0"	
	110	JANITOR	F 1	B 1	W 6	W 6	W6	W 6	C 3	–	
	111	DATA / TELECOM	F 1	B 1	W 1	W 1	W 1	W 1	C 3	–	NOTE 1
	112	ELECTRICAL	F 1	B 1	W 1	W 1	W 1	W 1	C 3	–	
	113	MEN	F 3	B 3	W 2	W 2	W 2	W2–W3	C 1	9'–0"	NOTE 3
	114	WOMEN	F 3	B 3	W 2	W 2	W 2	W2–W3	C 1	9'–0"	NOTE 3
	115	MEETING ROOM	F 2	B 1	W 1	W 1	W 1	W 1	C 1	9'–0"	NOTE 5
	116	MAINTENANCE SUPERVISOR	F 2	B 1	W 1	W 1	W 1	W 1	C 1	9'–0"	
	117	ASSISTANT SUPERVISOR	F 2	B 1	W 1	W 1	W 1	W 1	C 1	9'–0"	
	118	STOCK ROOM	F 2	B 1	W 1	W 1	W 1	W 1	C 1	9'–0"	
	119	CREW ROOM	F 2	B 1	W 1	W 1	W 1	W 1	C 1	10'–0"	
	120	CORRIDOR	F 2	B 1	W 1	–	W 1	W 1	C 1	10'–0"	
LAB / SHOP	201	CORRIDOR	F 2	B 1	W 6	W 6	W 6	W 6	C 1	10'–0"	
	202	LAB	F 2	B 1	W 6	W 6	W 6	W 6	C 1	9'–0"	
	203	LAB STORAGE	F 1	B 1	W 6	W 6	W 6	W 6	C 1	9'–0"	
	204	DUST ROOM	F 2	B 1	W 1	W 1	W 1	W 1	C 1	9'–0"	
	205	OVEN ROOM	F 2	B 1	W 1	W 1	W 1	W 1	C 1	9'–0"	
	206	SURVEY STORAGE	F 2	B 1	W 1	W 1	W 1	W 1	C 1	9'–0"	
	207	GENERAL STORAGE	F 1	B 1	W 1	W 1	W 1	W 1	C 1	9'–0"	
	208	MEN	F 3	B 3	W2–W3	W 2	W 2	W 2	C 4	9'–0"	NOTE 6
	209	WOMEN	F 3	B 3	W 2	W 2	W2–W3	W 2	C 4	9'–0"	NOTE 6
	210	RADIO ROOM	F 1	B 1	W 1	W 1	W 1	W 1	C 4	9'–0"	
	211	HUB ROOM	F 1	B 1	W 1	W 1	W 1	W 1	C 3	–	
	212	CREW ROOM	F 2	B 1	W 1	W 1	W 1	W 1	C 1	9'–0"	
	213	JANITOR	F 1	B 1	W 6	W 6	W 6	W 6	C 3	–	
	214	LOCKED STORAGE	F 1	B 1	W 1	W 1	W 1	W 1	C 1	9'–0"	
	215	EQUIPMENT SHOP	F 1	B 2	W4/W5	W4/W5	W4/W5	W4/W5	C 3	–	
	216	SHOP STORAGE	F 1	B 2	W 5	W 5	W 5	W 5	C 3	–	
	217	MATERIAL STORAGE	F 1	B 2	W 5	W 5	W 5	W 5	C 3	–	
	218	HERBICIDE ROOM	F 1	B 1	W 1	W 1	W 1	W 1	C 3	–	
	301	VEHICLE STORAGE	F 1	B 2	W 5	W 5	W 5	W 5	C 3	–	

FINISH NOTES:

1. INSTALL REDUCER STRIPS AT ALL FLOORING MATERIAL CHANGES.
2. REFER TO SPECIFICATIONS FOR ACOUSTICAL CEILING CLASSIFICATIONS "A" AND "B".

REMARKS NOTES:

NOTE 1. INSTALL 1/2"x 4'x 8' PLYWOOD ON WALL 4' A.F.F. ON SOUTH WALL. PROVIDE NECESSARY BLOCKING IN STUD WALLS TO SUPPORT PLYWOOD.

NOTE 2. PROVIDE BLOCKING IN STUD WALL @ 3' & 7' A.F.F. ON EAST AND WEST WALL OF CONFERENCE ROOM 107 AND NORTH WALL OF MEETING ROOM 114.

NOTE 3. INSTALL CERAMIC TILE OVER $\frac{5}{8}$" FIBEROCK AQUA TOUGH PANELS

NOTE 4. SEE ELEVATION 2/A6.2 FOR FINISHES AT MILLWORK

NOTE 5. SEE ELEVATION 1/A6.2 FOR FINISHES AT MILLWORK

NOTE 6 INSTALL WALL TILE TO A HEIGHT OF 8'-0" AFF AT THREE WALLS OF SHOWER STALL - 8' - W2 CEILING AT SHOWERS, EPOXY PAINT

FINISH SCHEDULE & DETAILS

NOTE: THIS DRAWING WAS CREATED FOR PRODUCTION ON 22" x 34" SHEET SIZE. DO NOT SCALE PRINTS.

Texas Department of Transportation
125 E. 11th Street
Austin, Texas 78701-2483
(512) 416-3000
Copyright © 2005 Texas Department of Transportation

THIS DOCUMENT IS RELEASED FOR THE PURPOSE OF
INFORMATION ONLY
NOT FOR REGULATORY
APPROVAL, PERMITTING,
OR CONSTRUCTION.

WACO AREA ENGINEER
AND MAINTENANCE FACILITY
WACO, MCLENNAN COUNTY
WACO DISTRICT

Revisions

Drawn by:
KAO/EE
Project No.
CBC4704-00672
Date
05.21.2007
Sheet No.
A9.1
of 37 sheets

CADFILE: T:\ANITA\D0GF1WC\BC4704-00-857\02-77-4704008371\Acad\proto\typical pdf\elwaco\Acad\Arch\0572_A9_1.dwg PltStat: FitL Aug. 07, 2009 @ 1:35 PM By: MBAZAN

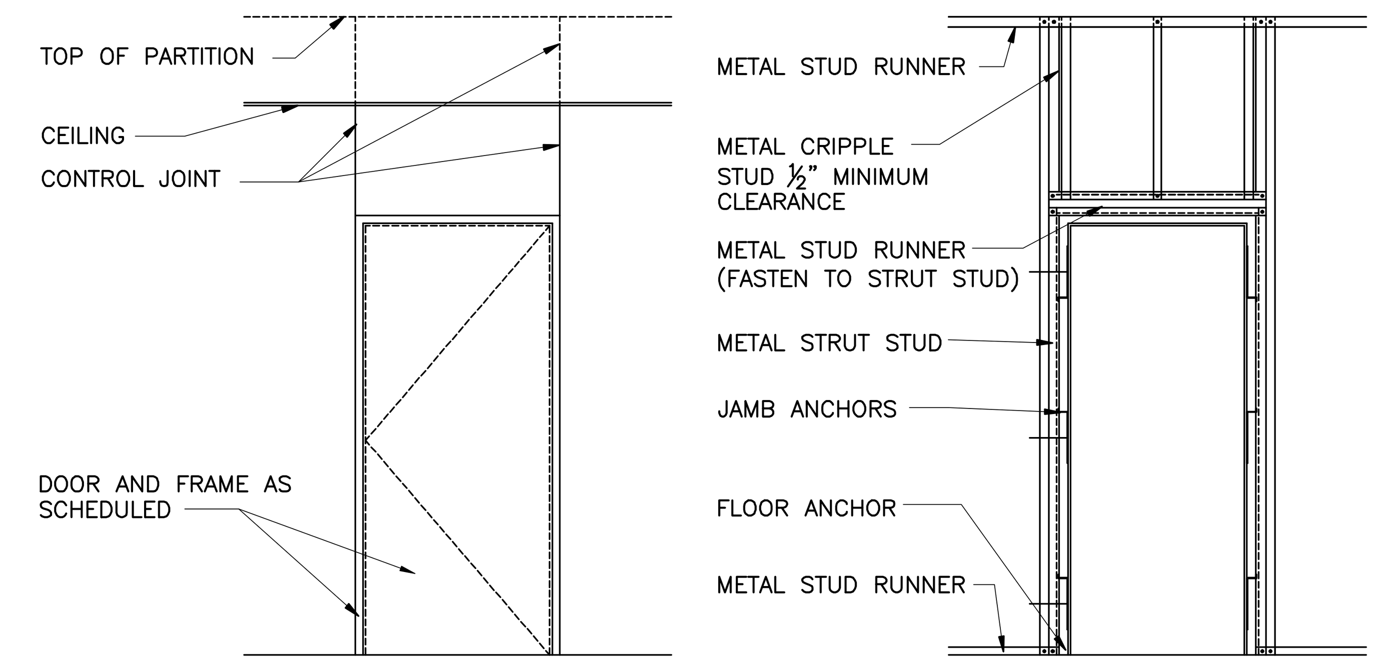

6 DOOR FRAMING

SCALE: N. T. S.

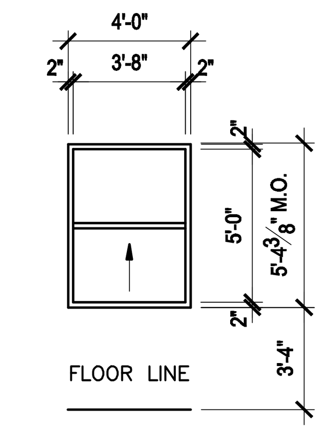

WINDOW TYPE (A)

SINGLE HUNG ALUMINUM (2" X 4½") WITH CLEAR ANODIZED FINISH.

GLAZE WITH 1" THICK, GREEN TINTED (OUTER PANE ONLY), TEMPERED, INSULATING GLASS W/ S.S. INSECT SCREEN

5 WINDOW TYPES

SCALE: N. T. S.

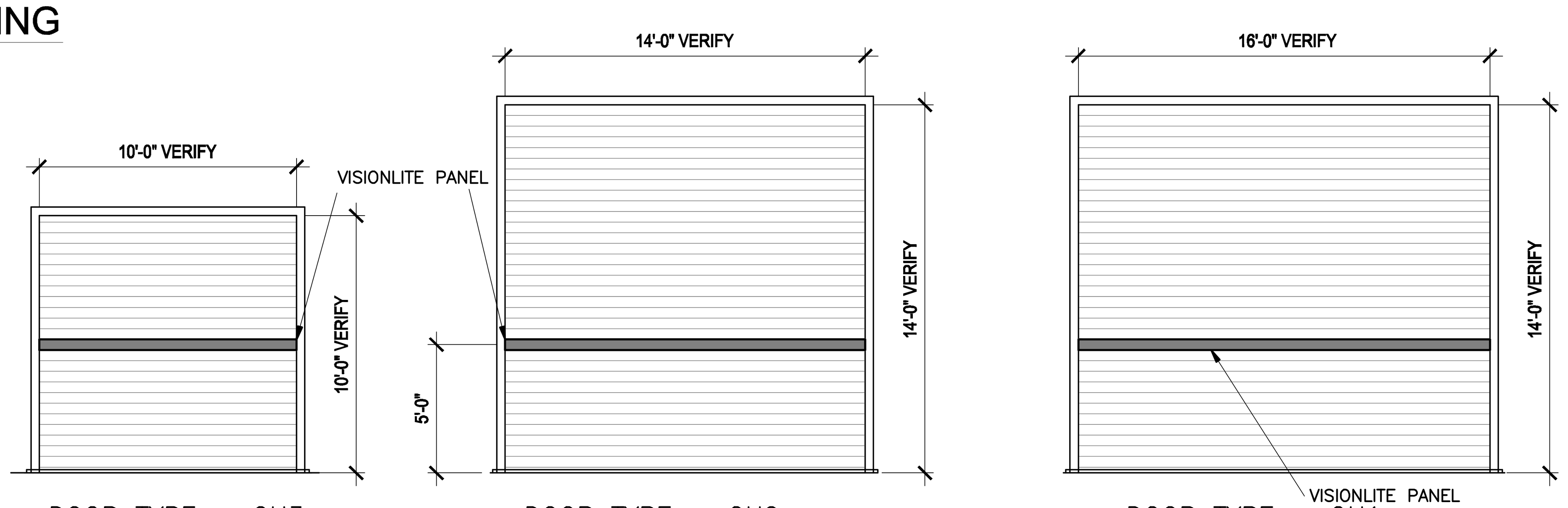

DOOR TYPE – OH3

STEEL, COILING DOOR (INSULATED).

DOOR TYPE – OH2

STEEL, COILING DOOR (INSULATED).

DOOR TYPE – OH1

STEEL, COILING DOOR (INSULATED).

4 COILING DOOR TYPES

SCALE: N. T. S.

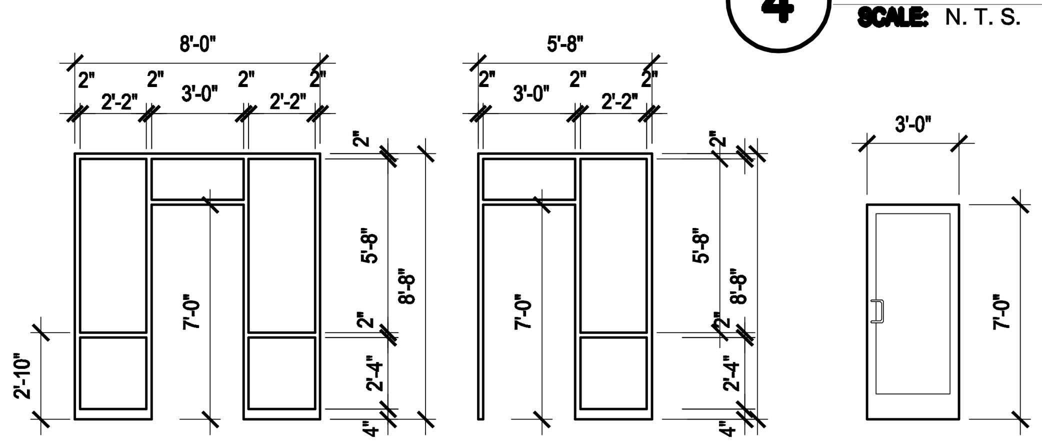

FRAME TYPE – AL2

ALUMINUM STORE FRONT SYSTEM (2" X 4½") WITH CLEAR ANODIZED FINISH.

GLAZE WITH 1" THICK, GREEN TINTED (OUTER PANE ONLY), TEMPERED, INSULATING GLASS.

FRAME TYPE – AL1

DOOR TYPE – AL1

1¾" THICK, ALUMINUM FRAME, NARROW STYLE DOOR WITH 10" HIGH BOTTOM RAIL – CLEAR ANODIZED FINISH.

GLAZE WITH ½" THICK, GREEN, TEMPERED PLATE GLASS.

3 STORE FRONT SYSTEM

SCALE: N. T. S.

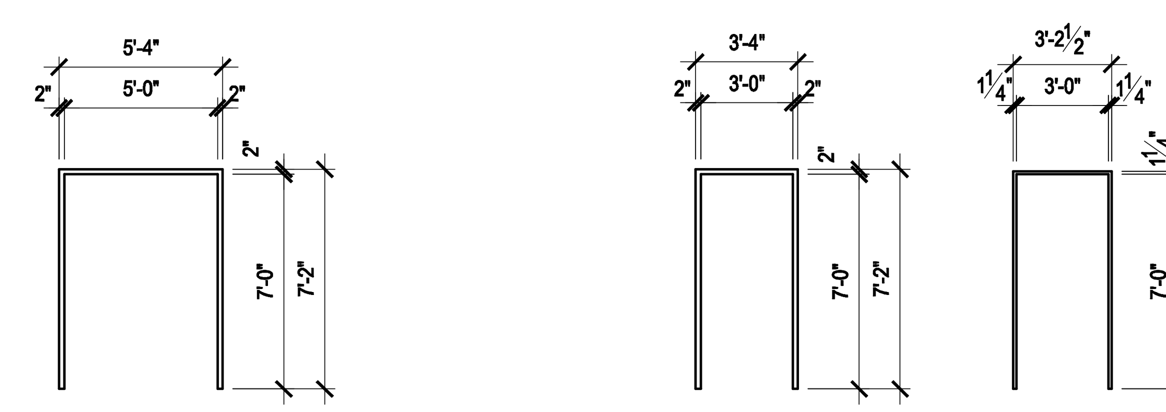

FRAME TYPE F4

HOLLOW METAL FRAME.

PAINT FINISH.

FRAME TYPE F3

NOT USED

FRAME TYPE F2

HOLLOW METAL FRAME.

PAINT FINISH.

FRAME TYPE F1

RED OAK WOOD FRAME.

STAIN AND VARNISH FINISH. MATCH DOOR AND TRIM.

2 FRAME TYPES

SCALE: N. T. S.

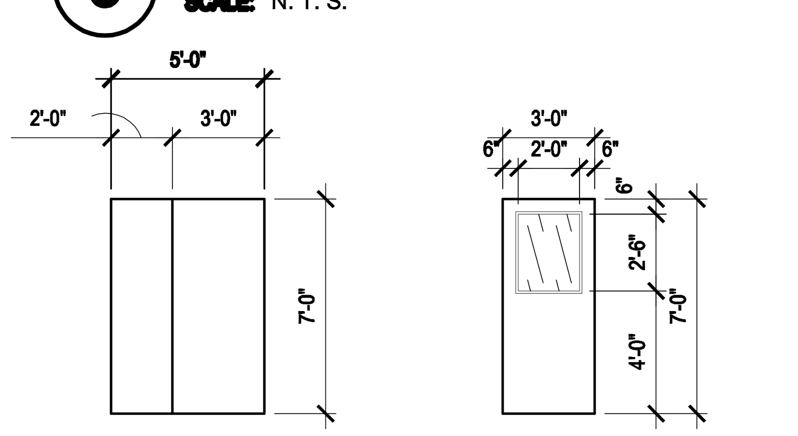

DOOR TYPE – D8

1¾" THICK, FLUSH, EXTRA HEAVY–DUTY, HOLLOW METAL DOOR.

PAINT FINISH.

DOOR TYPE – D7

1¾" THICK, FLUSH, EXTRA HEAVY–DUTY, HOLLOW METAL DOOR.

PAINT FINISH.

FURNISH DOOR WITH ¼" THICK, CLEAR, GLASS VIEW LITE (6"WX24"H) IN METAL FRAME

DOOR TYPE – D6

NOT USED

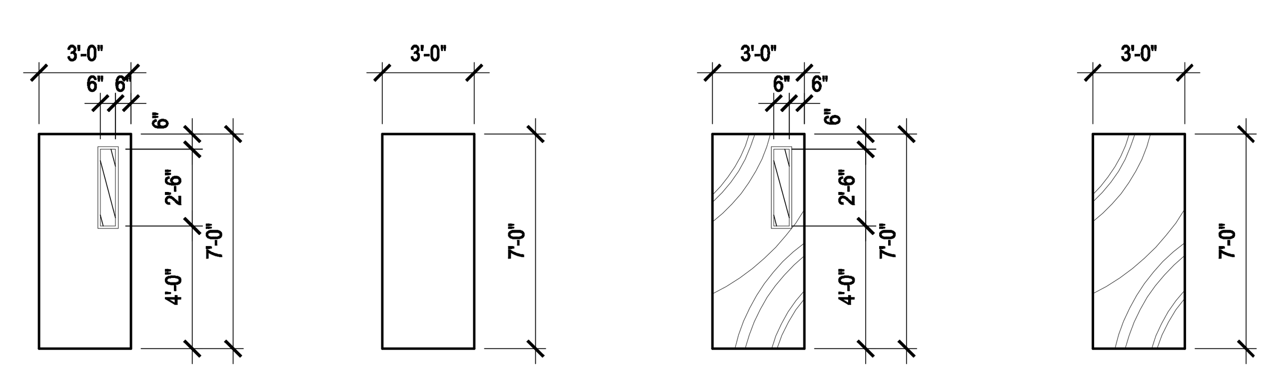

DOOR TYPE – D4

1¾" THICK, FLUSH, EXTRA HEAVY–DUTY, HOLLOW METAL DOOR.

PAINT FINISH.

FURNISH DOOR WITH ¼" THICK, CLEAR, GLASS VIEW LITE (6"WX24"H) IN METAL FRAME

DOOR TYPE – D3

1¾" THICK, FLUSH, EXTRA HEAVY–DUTY, HOLLOW METAL DOOR.

PAINT FINISH.

DOOR TYPE – D2

1¾" THICK, FLUSH, SOLID CORE, PLAIN SLICED, RED OAK, VENEER DOOR.

STAIN AND VARNISH FINISH.

FURNISH DOOR WITH ¼" THICK, CLEAR, GLASS VIEW LITE (6"WX24"H) IN METAL FRAME

DOOR TYPE – D1

1¾" THICK, FLUSH, SOLID CORE, PLAIN SLICED, RED OAK, VENEER DOOR.

STAIN AND VARNISH FINISH.

1 DOOR TYPES

SCALE: N. T. S.

DOOR SCHEDULE

	DOOR NUMBER	DOOR SIZE	DOOR TYPE	DOOR MAT'L	FRAME TYPE	FRAME MAT'L	DETAILS HEAD	DETAILS JAMB	DETAILS SILL	FIRE RATE	HDWE SET	REMARKS
OFFICE BUILDING	101	3-0" X 7'-0" X 1 3/4"	AL1	ALUM.	AL2	ALUM.	8/A9.4		9/A9.4		9	NOTE 1
	102	3'-0" X 7'-0" X 1 3/4"	D1	WOOD	F1	WOOD	10/A9.3	9/A9.3			4	
	103	3'-0" X 7'-0" X 1 3/4"	D1	WOOD	F1	WOOD	10/A9.3	9/A9.3			7	
	104	3'-0" X 7'-0" X 1 3/4"	D1	WOOD	F1	WOOD	10/A9.3	9/A9.3			7	
	105	3'-0" X 7'-0" X 1 3/4"	D4	H. M.	F2	H. M.	3/A9.3	2/A9.3	1/A9.3		1	NOTE 1
	107	3'-0" X 7'-0" X 1 3/4"	D4	H. M.	F2	H. M.	3/A9.3	2/A9.3	1/A9.3		1	NOTE 1
	108	3'-0" X 7'-0" X 1 3/4"	D2	WOOD	F1	WOOD	10/A9.3	9/A9.3			6	
	109	Clear Passageway	N/A	N/A	N/A	N/A						
	110	3'-0" X 7'-0" X 1 3/4"	D1	WOOD	F1	WOOD	10/A9.3	9/A9.3			4	
	111	3'-0" X 7'-0" X 1 3/4"	D1	WOOD	F1	WOOD	10/A9.3	9/A9.3			4	
	112	3'-0" X 7'-0" X 1 3/4"	D1	WOOD	F1	WOOD	10/A9.3	9/A9.3			4	
	113	3'-0" X 7'-0" X 1 3/4"	D1	WOOD	F1	WOOD	10/A9.3	9/A9.3			8	NOTE 2
	114	3'-0" X 7'-0" X 1 3/4"	D1	WOOD	F1	WOOD	10/A9.3	9/A9.3			5	NOTE 2
	115A	3'-0" X 7'-0" X 1 3/4"	D4	H. M.	F2	H. M.	3/A9.3	2/A9.3	1/A9.3		1	NOTE 1
	115B	3'-0" X 7'-0" X 1 3/4"	D2	WOOD	F1	WOOD	10/A9.3	9/A9.3			6	
	116	3'-0" X 7'-0" X 1 3/4"	D1	WOOD	F1	WOOD	10/A9.3	9/A9.3			7	
	117	3'-0" X 7'-0" X 1 3/4"	D1	WOOD	F1	WOOD	10/A9.3	9/A9.3			7	
	118	3'-0" X 7'-0"	D1	WOOD	F1	WOOD	10/A9.3	9/A9.3			7	
LAB/SHOP	201A	3-0" X 7'-0" X 1 3/4"	AL1	ALUM.	AL1	ALUM.					9	NOTE 1
	201B	3-0" X 7'-0" X 1 3/4"	AL1	ALUM.	AL1	ALUM.					9	NOTE 1
	202A	3'-0" X 7'-0" X 1 3/4"	D7	H.M.	F2	H.M.	6/A9.3	5/A9.3			4	
	202B-1	3'-0" x 7-0" x 1-3/4"	D8	H.M.	F4	H.M.	16/A9.3	15/A9.3	11/A9.3		2	Leaf 1
	202B-2	2'-0" x 7-0" x 1-3/4"	D8	H.M.		H.M.	16/A9.3	15/A9.3	11/A9.3			Leaf 2
	203A	3'-0" X 7'-0" X 1 3/4"	D3	H.M.	F2	H.M.	6/A9.3	5/A9.3			4	
	203B-1	3'-0" x 7-0" x 1-3/4"	D8	H.M.	F4	H.M.	16/A9.3	15/A9.3	11/A9.3		2	Leaf 1
	203B-2	2'-0" x 7-0" x 1-3/4"	D8	H.M.		H.M.	16/A9.3	15/A9.3	11/A9.3			Leaf 2
	204	3'-0" X 7'-0" X 1 3/4"	D3	H.M.	F2	H.M.	6/A9.3	5/A9.3			7	
	205-1	3'-0" x 7-0" x 1-3/4"	D8	H.M.	F4	H.M.	6/A9.3	5/A9.3			2	Leaf 1
	205-2	2'-0" x 7-0" x 1-3/4"	D8	H.M.		H.M.	16/A9.3	15/A9.3	11/A9.3			Leaf 2
	206	3'-0" X 7'-0" X 1 3/4"	D3	H.M.	F2	H.M.	6/A9.3	5/A9.3			4	
	207	3'-0" X 7'-0" X 1 3/4"	D3	H.M.	F2	H.M.	6/A9.3	5/A9.3			4	
	208	3'-0" X 7'-0" X 1 3/4"	D3	H.M.	F2	H.M.	6/A9.3	5/A9.3			8	
	209	3'-0" X 7'-0" X 1 3/4"	D3	H.M.	F2	H.M.	6/A9.3	5/A9.3			8	
	210	3'-0" x 7-0" x 1-3/4"	D3	H.M.	F2	H.M.	16/A9.3	15/A9.3	11/A9.3		4	
	211	3'-0" X 7'-0" X 1 3/4"	D3	H.M.	F2	H.M.	6/A9.3	5/A9.3			4	
	212	3'-0" X 7'-0" X 1 3/4"	D7	H.M.	F2	H.M.	6/A9.3	5/A9.3			7	
	213	3'-0" X 7'-0" X 1 3/4"	D3	H.M.	F2	H.M.	6/A9.3	5/A9.3			4	
	214	3'-0" X 7'-0" X 1 3/4"	D3	H.M.	F2	H.M.	6/A9.3	5/A9.3			4	
	215A	3'-0" X 7'-0" X 1 3/4"	D4	H.M.	F2	H.M.	6/A9.3	5/A9.3			4	
	215B	3'-0" x 7-0" x 1-3/4"	D4	H.M.	F2	H.M.	14/A9.3	13/A9.3	4/A9.3		4	
	215C	16'-0" x 14'-0" x 2"	OH1	STEEL		STEEL	12/A9.3	17/A9.3	11/A9.3		10	
	215D	16'-0" x 14'-0" x 2"	OH1	STEEL		STEEL	12/A9.3	17/A9.3	11/A9.3		10	
	216A	2-3'-0"x 7'-0"x 1-3/4"	D5	H.M.	F5	H.M.	6/A9.3	5/A9.3			2	
	216B	10'-0" x 14'-0" x 2"	OH2	STEEL		STEEL	12/A9.3	17/A9.3	11/A9.3		10	
	217A	3'-0" X 7'-0" X 1 3/4"	D3	H.M.	F2	H.M.	6/A9.3	5/A9.3			4	
	217B	3'-0" x 7-0" x 1-3/4"	D3	H.M.	F2	H.M.	14/A9.3	13/A9.3	4/A9.3		4	
	217C	14'-0" x 14'-0" x 2"	OH2	STEEL		STEEL	12/A9.3	17/A9.3	11/A9.3		10	
	218	3'-0" x 7-0" x 1-3/4"	D3	H.M.	F2	H.M.	14/A9.3	13/A9.3	4/A9.3		4	NOTE 3
VEHICLE STOR	301A	3'-0" x 7-0" x 1-3/4"	D4	H.M.	F2	H.M.	14/A9.3	13/A9.3	4/A9.3		4	
	301B	3'-0" x 7-0" x 1-3/4"	D4	H.M.	F2	H.M.	14/A9.3	13/A9.3	4/A9.3		4	
	301C	14'-0" x 14'-0" x 2"	OH2	STEEL		STEEL	12/A9.3	17/A9.3	11/A9.3		7	
	301D	14'-0" x 14'-0" x 2"	OH2	STEEL		STEEL	12/A9.3	17/A9.3	11/A9.3		7	
	301E	14'-0" x 14'-0" x 2"	OH2	STEEL		STEEL	12/A9.3	17/A9.3	11/A9.3		7	
	301F	14'-0" x 14'-0" x 2"	OH2	STEEL		STEEL	12/A9.3	17/A9.3	11/A9.3		7	
	301G	14'-0" x 14'-0" x 2"	OH2	STEEL		STEEL	12/A9.3	17/A9.3	11/A9.3		7	
WASH BAY	1	3'-0" X 7'-0" X 1 3/4"	D3	H.M.	F2	H.M.	6/A8.7	8/A8.7	10/A8.7		1	
	2	3'-0" X 7'-0" X 1 3/4"	D3	H.M.	F2	H.M.	6/A8.7	8/A8.7	10/A8.7		1	
	3	10'-0" x 10'-0"	OH3	STEEL	-	STEEL	12/A9.3	17/A9.3	11/A9.3		4	

REMARK NOTES:

1/2" WEATHERSTRIPPING AND D00R SWEEP.
UNDERCUT DOOR 1".
SEE MECHANICAL SPECIFICATIONS FOR LOUVER TYPE.
INSTALL 4" WIDE DUAL GUARD BY PROTECTO WRAP COMPANY UNDER ALL EXTERIOR DOOR THRESHOLDS.

Texas Department of Transportation
125 E. 11th Street
Austin, Texas 78701-2483
(512) 416-3048
Copyright © 2005 Texas Department of Transportation

THIS DOCUMENT IS RELEASED FOR THE PURPOSE OF INFORMATION ONLY
NOT FOR REGULATORY APPROVAL, PERMITTING, OR CONSTRUCTION.

WACO AREA ENGINEER AND MAINTENANCE FACILITY
WACO, MCLENNAN COUNTY WACO DISTRICT

Revisions

Drawn by: KAO/EE
Project No. CBC4704-00672
Date 05.21.2007
Sheet No.
A9.2
of 37 sheets

DOOR SCHEDULE - DOOR & WINDOW TYPES

NOTE: THIS DRAWING WAS CREATED FOR PRODUCTION ON 22" x 34" SHEET SIZE. DO NOT SCALE PRINTS.

CADFILE: T:\MNTFM\D02FTW\CBC4704-00-837\02-77-4704\00637\Acad\prototypical pdfs\waco\Acad\Arch\0672_A9_2.dwg Plotted: Fri. Aug. 07, 2009 @ 1:06 PM By: MBAZAN

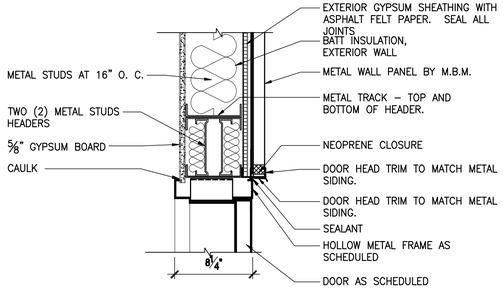

16 EXTERIOR DOOR HEAD
SCALE: 1 -1/2"= 1'-0"

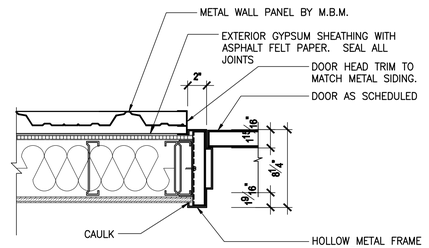

15 EXTERIOR DOOR JAMB
SCALE: 1 -1/2"= 1'-0"

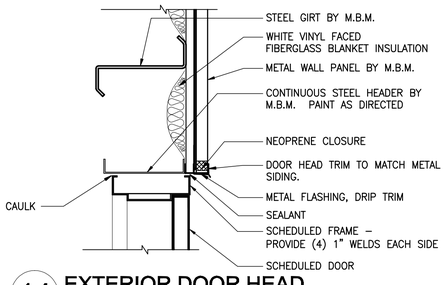

14 EXTERIOR DOOR HEAD
SCALE: 1 -1/2"= 1'-0"

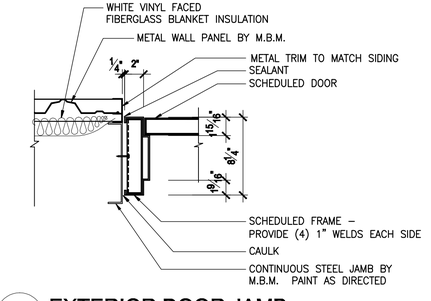

13 EXTERIOR DOOR JAMB
SCALE: 1 -1/2"= 1'-0"

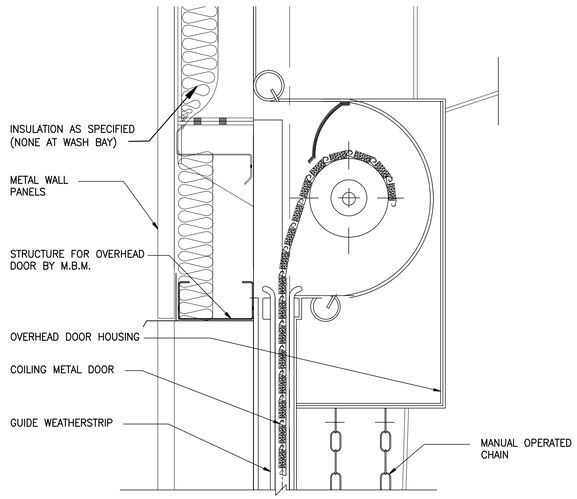

12 COILING DOOR HEAD
SCALE: 1 -1/2"= 1'-0"

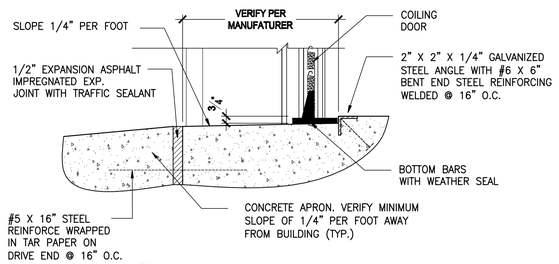

11 COILING DOOR SILL
SCALE: 1 -1/2"= 1'-0"

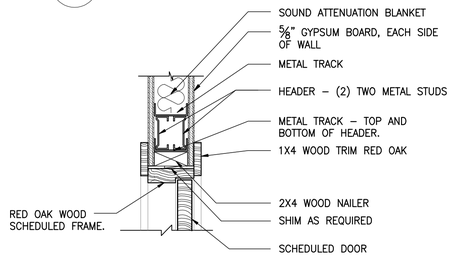

10 INTERIOR DOOR HEAD
SCALE: 1 -1/2"= 1'-0"

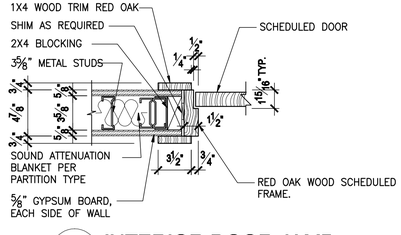

9 INTERIOR DOOR JAMB
SCALE: 1 -1/2"= 1'-0"

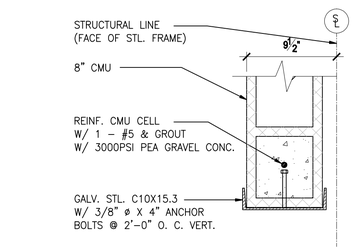

8 DOOR JAMB
SCALE:

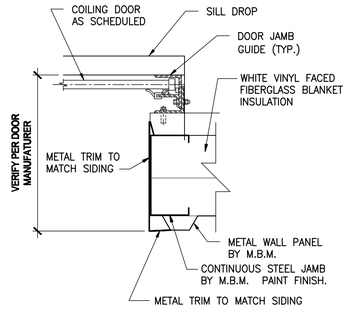

7 COILING DOOR JAMB
SCALE: 1 -1/2"= 1'-0"

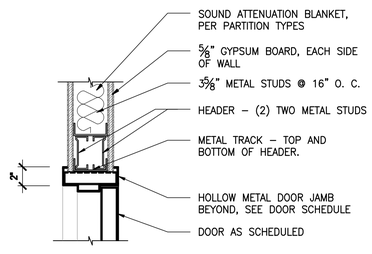

6 INTERIOR DOOR HEAD
SCALE: 1 -1/2"= 1'-0"

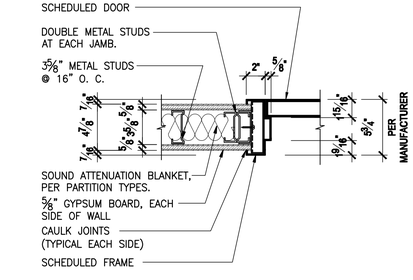

5 INTERIOR DOOR JAMB
SCALE: 1 -1/2"= 1'-0"

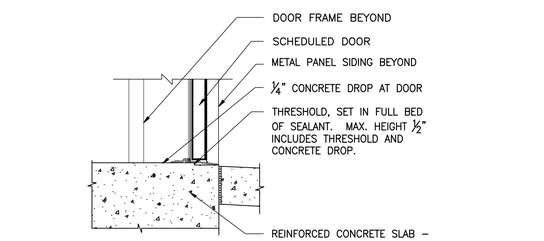

4 EXTERIOR DOOR SILL
SCALE: 1 -1/2"= 1'-0"

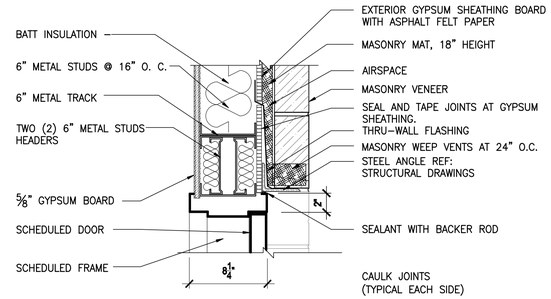

3 EXTERIOR DOOR HEAD
SCALE: 1 -1/2"= 1'-0"

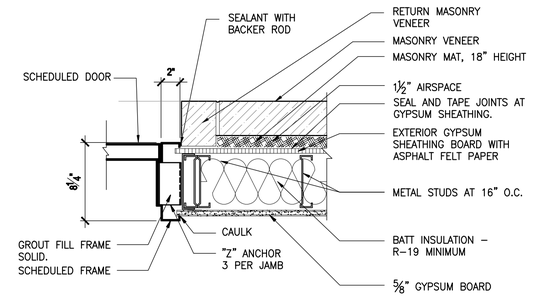

2 EXTERIOR DOOR JAMB
SCALE: 1 -1/2"= 1'-0"

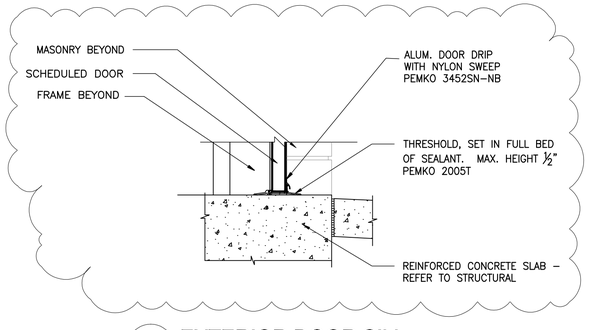

1 EXTERIOR DOOR SILL
SCALE: 1 -1/2"= 1'-0"

DOOR DETAILS

NOTE: THIS DRAWING WAS CREATED FOR PRODUCTION ON SHEET SIZE 24" X 36". DO NOT SCALE PRINTS.

CADFILE: T:\MNTPA\D\25TWC\BC4704-00-857\02-77-4704008571\Acad\prototypical pdf\Awxxx\Acad\Arch\0572_A9_3.dwg [Plotted: Fri, Aug. 07, 2009 @ 1:57 PM By: MBAZAN

Texas Department of Transportation
125 E. 11th Street
Austin, Texas 78701-2483
(512) 416-3000
Copyright © 2005 Texas Department of Transportation

THIS DOCUMENT IS RELEASED FOR THE PURPOSE OF INFORMATION ONLY NOT FOR REGULATORY APPROVAL, PERMITTING, OR CONSTRUCTION.

WACO AREA ENGINEER AND MAINTENANCE FACILITY
WACO, MCLENNAN COUNTY
WACO DISTRICT

Revisions
1 06/15/07

Drawn by: KAO/AV
Project No. CBC4704-00572
Date 05.21.2007
Sheet No.

A9.3
of 37 sheets

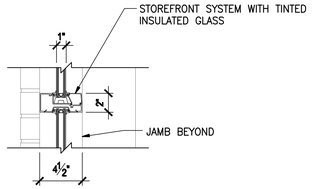

16 WINDOW MULLION DETAIL
SCALE: 1-1/2" = 1'-0"

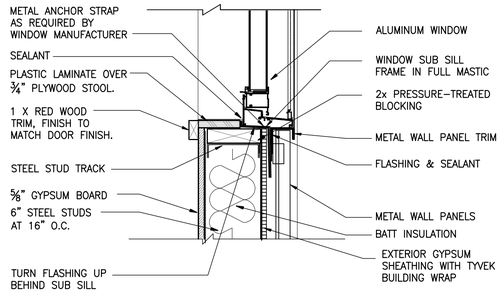

12 WINDOW JAMB
SCALE: 1-1/2" = 1'-0"

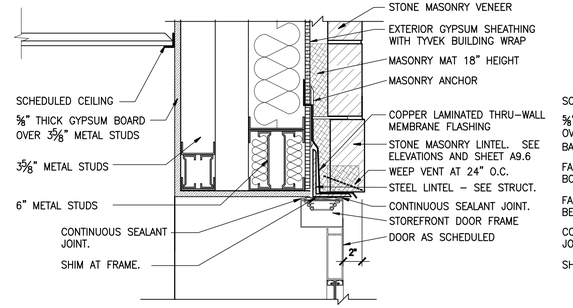

8 DOOR HEAD
SCALE: 1-1/2" = 1'-0"

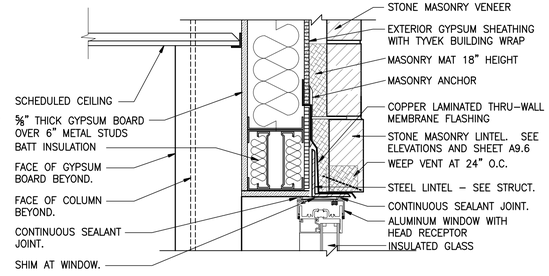

4 WINDOW HEAD
SCALE: 1-1/2" = 1'-0"

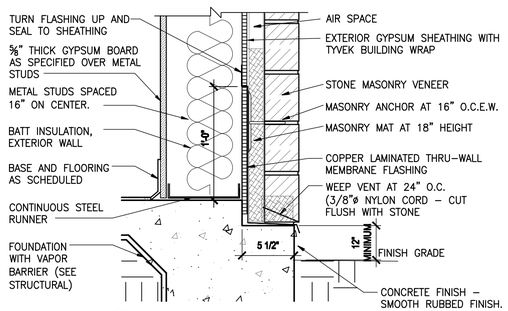

15 MASONRY BASE DETAIL
SCALE: 1-1/2" = 1'-0"

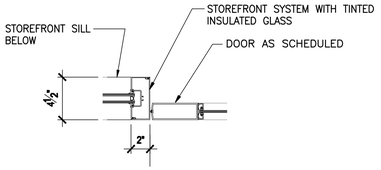

11 DOOR JAMB / HEAD SIMILAR
SCALE: 1-1/2" = 1'-0"

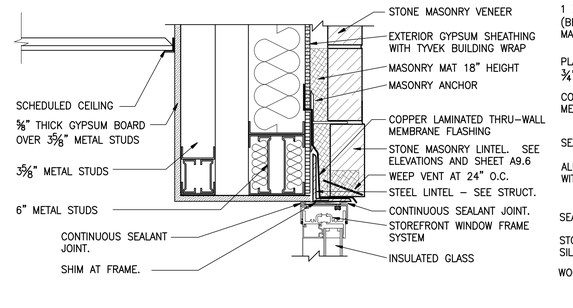

7 WINDOW HEAD
SCALE: 1-1/2" = 1'-0"

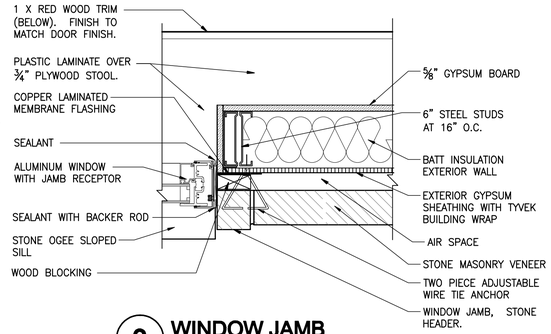

3 WINDOW JAMB
SCALE: 1-1/2" = 1'-0"

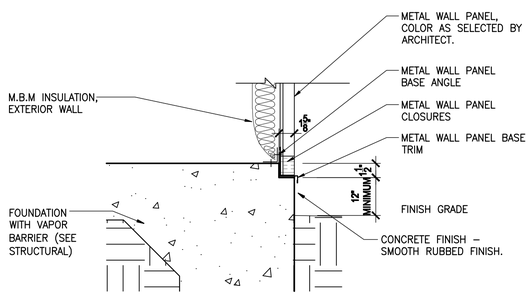

14 METAL SIDING BASE DETAIL
SCALE: 1-1/2" = 1'-0"

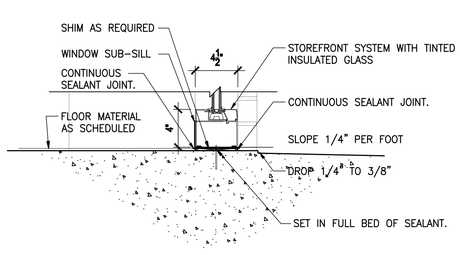

10 WINDOW SILL
SCALE: 1-1/2" = 1'-0"

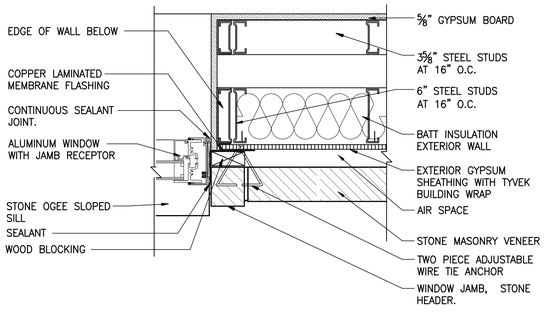

6 WINDOW JAMB
SCALE: 1-1/2" = 1'-0"

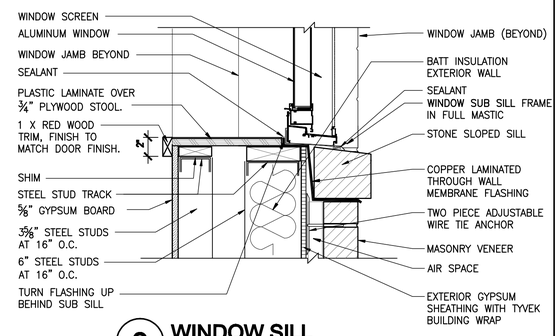

2 WINDOW SILL
SCALE: 1-1/2" = 1'-0"

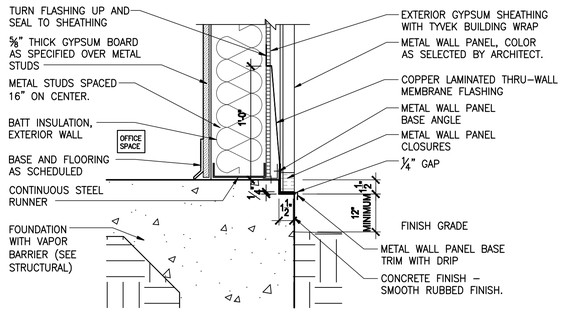

13 METAL SIDING BASE DETAIL
SCALE: 1-1/2" = 1'-0"

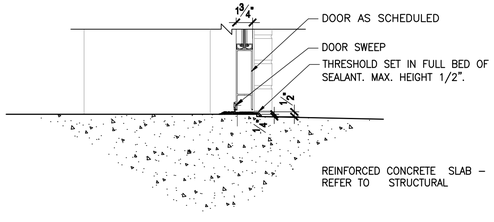

9 DOOR SILL
SCALE: 1-1/2" = 1'-0"

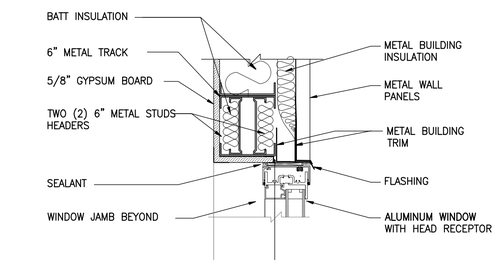

5 WINDOW HEAD
SCALE: 1-1/2" = 1'-0"

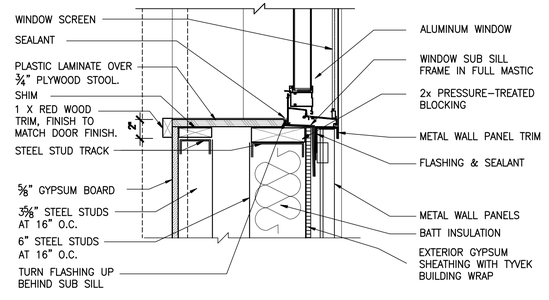

1 WINDOW SILL
SCALE: 1-1/2" = 1'-0"

WINDOW AND DOOR DETAILS

NOTE: THIS DRAWING WAS CREATED FOR PRODUCTION ON SHEET SIZE. DO NOT SCALE PRINTS.

CADFILE: T:\MAINTPAD\28FTWCBC4704-00-837\03-77-4704008371\Acad\prints\typical pdf\sheet\A\Acad\Arch\0572_A9_4.dwg Plotted: Fri, Aug. 07, 2009 @ 1:07 PM By: MBAZAN

Texas Department of Transportation
125 E. 11th Street
Austin, Texas 78701-2483
(512) 416-3000

Copyright © 2005 Texas Department of Transportation

THIS DOCUMENT IS RELEASED FOR THE PURPOSE OF INFORMATION ONLY NOT FOR REGULATORY APPROVAL, PERMITTING, OR CONSTRUCTION.

WACO AREA ENGINEER AND MAINTENANCE FACILITY
WACO, MCLENNAN COUNTY
WACO DISTRICT

Revisions

Drawn by: JOT
Project No. CBC4704-00672
Date 05.21.2007
Sheet No.

A9.4
of 37 sheets

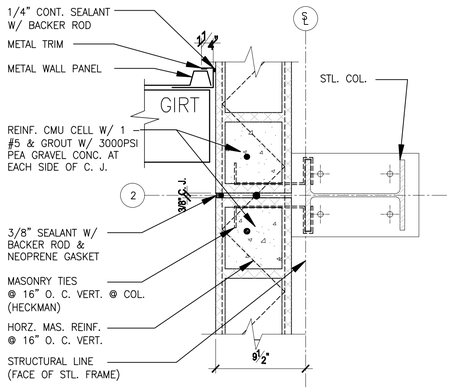

9 CONTROL JOINT AND BUTT WALL DETAIL
SCALE: 1 -1/2"= 1'-0"

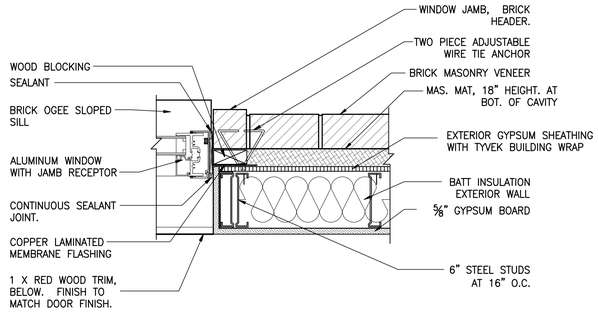

6 WINDOW SILL
SCALE: 1 -1/2"= 1'-0"

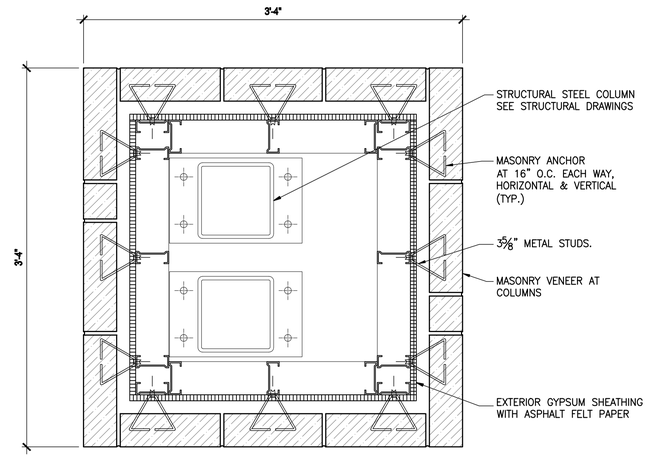

3 PLAN DETAIL
SCALE: 1 -1/2"= 1'-0"

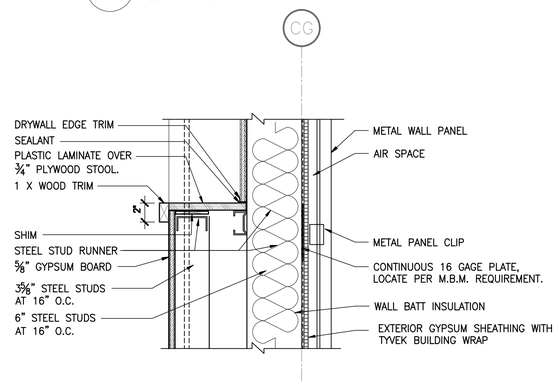

8 SILL SECTION DETAIL
SCALE: 1 -1/2"= 1'-0"

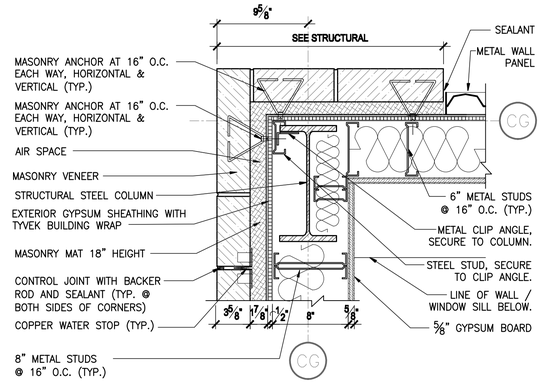

5 PLAN DETAIL
SCALE: 1 -1/2"= 1'-0"

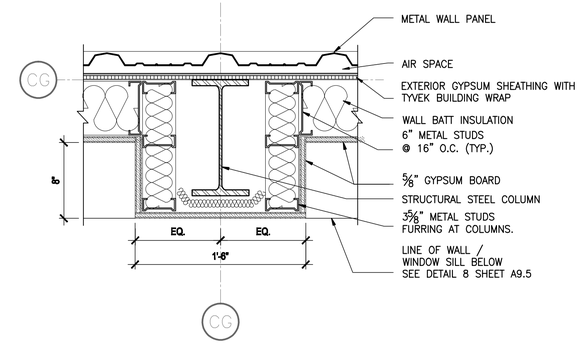

2 PLAN DETAIL
SCALE: 1 -1/2"= 1'-0"

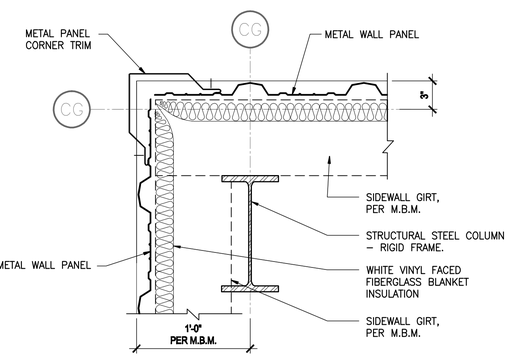

7 PLAN DETAIL
SCALE: 1 -1/2"= 1'-0"

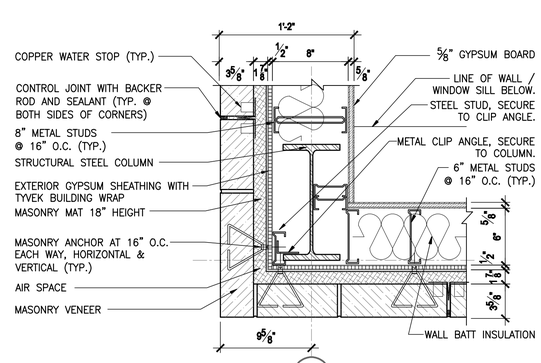

4 PLAN DETAIL
SCALE: 1 -1/2"= 1'-0"

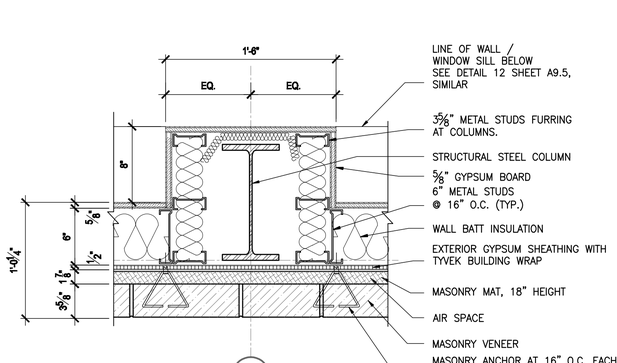

1 PLAN DETAIL
SCALE: 1 -1/2"= 1'-0"

PLAN DETAILS

NOTE: THIS DRAWING WAS CREATED FOR PRODUCTION ON 22" x 34" SHEET SIZE. DO NOT SCALE PRINTS.

Texas Department of Transportation
125 E. 11th Street
Austin, Texas 78701-2483
(512) 416-2000

Copyright © 2005 Texas Department of Transportation

THIS DOCUMENT IS RELEASED FOR THE PURPOSE OF
INFORMATION ONLY
NOT FOR REGULATORY
APPROVAL, PERMITTING,
OR CONSTRUCTION.

WACO AREA ENGINEER AND MAINTENANCE FACILITY
WACO, MCLENNAN COUNTY
WACO DISTRICT

Revisions

Drawn by: JOT/KAO
Project No. CBC4704-00672
Date 05.21.2007
Sheet No.

A9.5
of 37 sheets

CADFILE: T:\ANITA\DGN\TWC\BC4704-00-857\02-77-4704D857\Acad\dynotxt\dynotxt pdf\texas\Acad\Arch\A9572_A9_5.dwg Plotted: Fri, Aug. 07, 2009 @ 13:27 PM By: MBAZAN

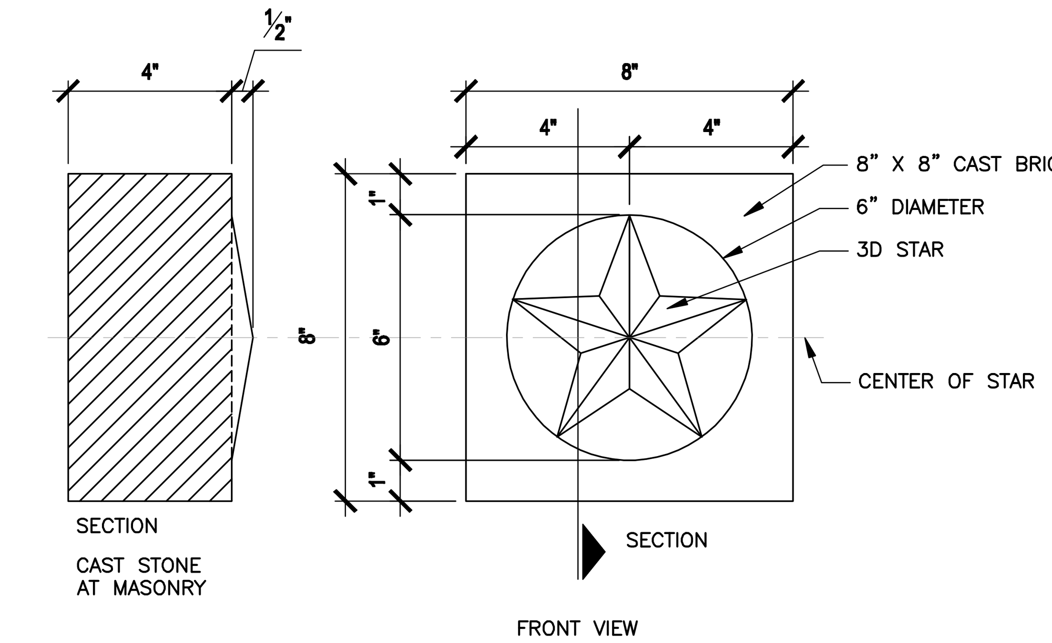

1 CAST STONE STAR ELEVATION / SECTION
SCALE: 3"= 1'-0"

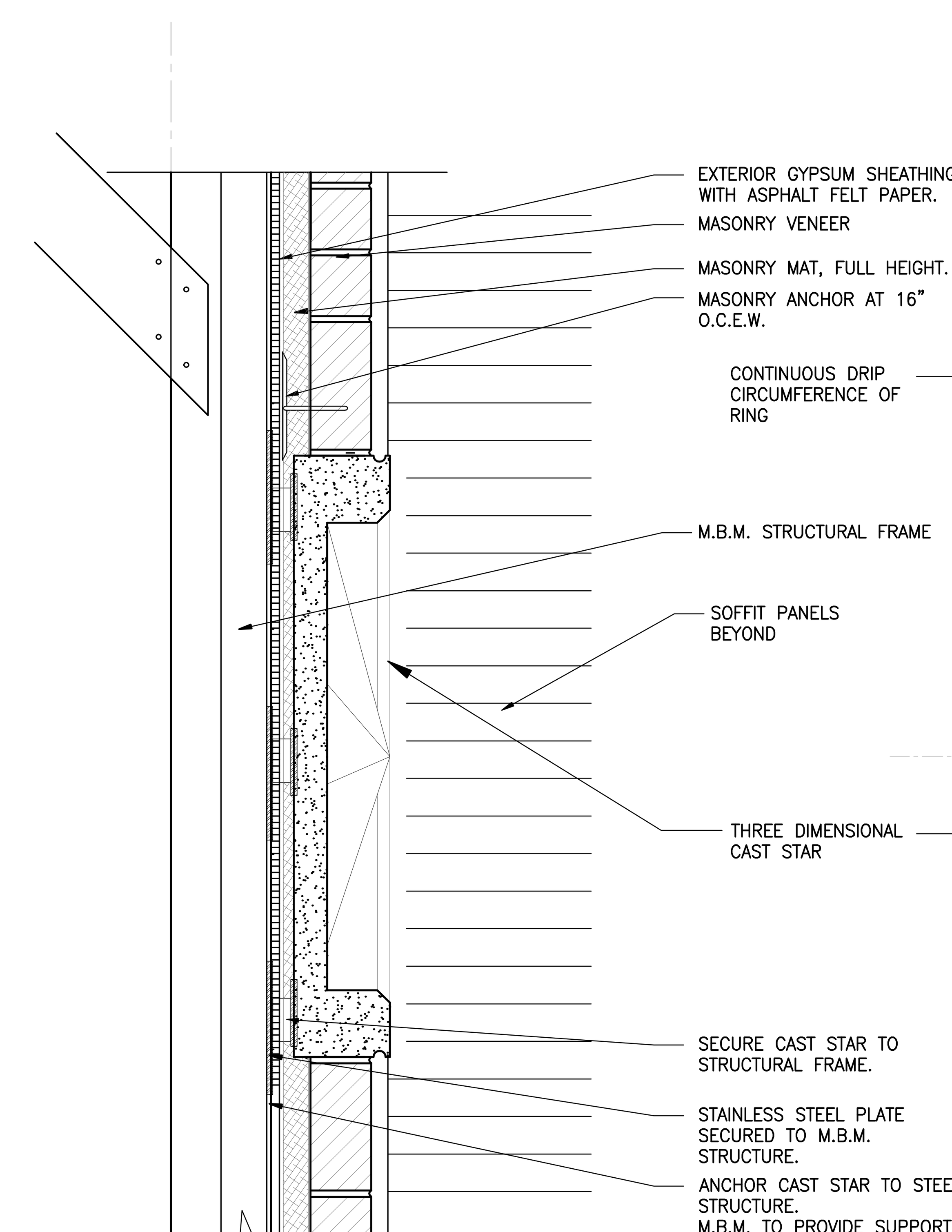

3 CAST STONE LARGE STAR DETAIL
SCALE: 1 -1/2"= 1'-0"

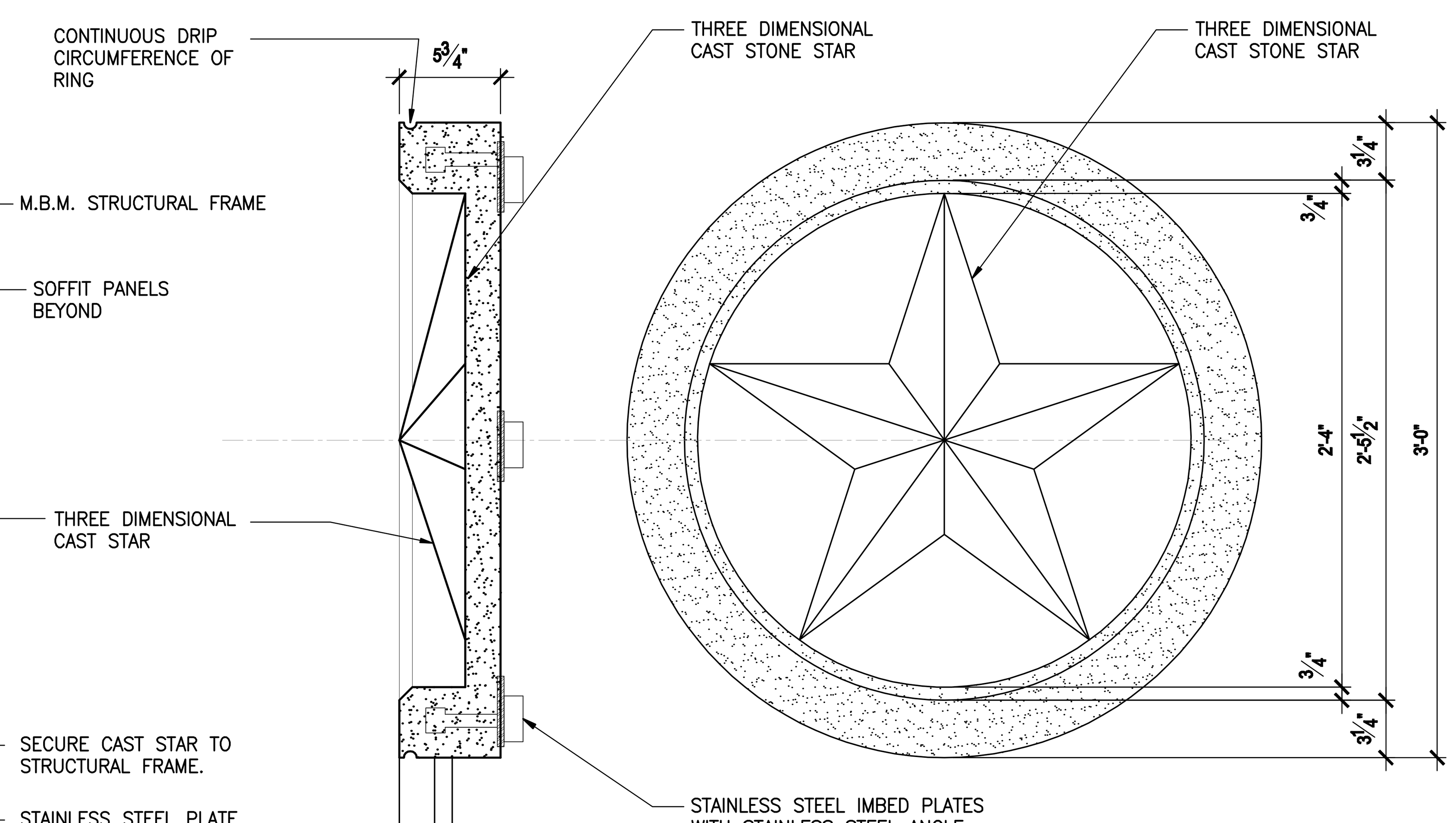

2 CAST STONE LARGE STAR ELEVATION / SECTION
SCALE: 1 -1/2"= 1'-0"

DETAILS

Texas Department of Transportation
125 E. 11th Street
Austin, Texas 78701-2483
(512) 416-2046
Copyright © 2005 Texas Department of Transportation

THIS DOCUMENT IS RELEASED FOR THE PURPOSE OF
INFORMATION ONLY
NOT FOR REGULATORY
APPROVAL, PERMITTING,
OR CONSTRUCTION.

WACO AREA ENGINEER AND MAINTENANCE FACILITY
WACO, MCLENNAN COUNTY
WACO DISTRICT

Revisions

Drawn by: JOT/KAO
Project No. CBC4704-00672
Date 05.21.2007
Sheet No.

A9.6
of 37 sheets

NOTE: THIS DRAWING WAS CREATED FOR PRODUCTION ON SHEET SIZE. DO NOT SCALE PRINTS.

CADFILE: T:\M\NTFM\D02FTW\CBC4704-00-837\02-77-47040087\Acad\prototypical pdfs\waco\Acad\Arch\0672_A9_6.dwg Plotted: Fri, Aug. 07, 2009 @ 1:59 PM By: MBAZAN

STRUCTURAL GENERAL NOTES

FOUNDATION NOTES

1. REMOVE ALL VEGETATION AND TOP SOIL FROM THE BUILDING AREA. STOCKPILE TOP SOIL FOR USE AT THE END OF PROJECT. EXCAVATE THE EXISTING SUBGRADE TO A DEPTH OF 6 FEET FROM LOW POINT AND EXTEND 3 FT. BEYOND THE EXTERIOR OF THE BUILDING AREA.
2. SCARIFY, MIX 7 % LIME/CEMENT BY WT. DEPENDING ON SOIL CONDITION, AND RECOMPACT THE NEXT 8" OF SOIL TO 95 % OF MAX DENSITY PER ASTM D698. THEN BACKFILL IN 8" LIFTS USING STRUCTURAL FILL . COMPACT TO A DENSITY OF 95 % PER ASTM D698 AT MOISTURE CONTENT EQUAL TO OR GREATER THAN THE OPTIMUM MOISTURE CONTENT FOR COHESIVE FILL AND AT WORKABLE MOISTURE CONTENT FOR GRANULAR FILL.
3. STRUCTURAL FILL SHALL CONSIST OF WELL GRADED GRANULAR MATERIAL FREE OF ORGANIC MATTER AND DEBRIS. NATURALLY OR ARTIFICIALLY WELL GRADED MIXTURE OF GRAVEL, CRUSHED STONE AND SAND: ASTM D 2940 WITH AT LEAST 95 PERCENT PASSING A 1 1/2 INCH SIEVE AND NOT MORE THAN 20 % PASSING No 200 U.S. STANDARD SIEVE, AND INCLUDE ALL IN BETWEEN SIZES. A PLASTIC INDEX OF 8 T0 18 WITH A LIQUID LIMIT OF 35 OR LESS IS REQUIRED.
4. COMPACTION AND MOISTURE CONTENT OF SUBGRADE AND EACH LIFT SHALL BE MONITORED BY QC INSPECTOR.
5. ALLOWABLE BEARING = 2000 PSF.
6. FOOTING EXCAVATION SHALL BE NEAT AND FREE OF LOOSE OR WET MATERIALS.
7. PROVIDE VAPOR RETARDER SHEET BELOW ALL SLAB AREAS AS PER SPECS, WITH ALL JOINTS LAPPED 12" CONTINUOUS AND SEALED. DROP VAPOR BARRIER DOWN THE SIDES OF ALL BEAM TRENCHES. DO NOT PLACE VAPOR BARRIER ACROSS TRENCH BOTTOM.
8. IF BEARING SOILS ARE SOFTENED BY SURFACE WATER INTRUSIONS DURING EXPOSURE OR BY DESICCATION, THE UNSUITABLE SOILS MUST BE REMOVED FROM THE FOUNDATION EXCAVATION PRIOR TO PLACEMENT OF CONCRETE
9. REFER TO GEOTECHNICAL STUDY BY ETTL Project No. T507-06 DATED JULY 17, 2006 (WACO).
10. GRADE AREA AROUND BUILDING TO DRAIN WATER AWAY FROM THE STRUCTURE. FINISHED FLOOR ELEVATIONS SHALL BE MINIMUM 12" ABOVE THE FINISH GRADE.
11. REFER TO PLUMBING DRAWINGS FOR LOCATION OF ALL SLAB PENETRATIONS

APPLICABLE SPECIFICATIONS AND CODES:

CONSTRUCTION SHALL BE IN ACCORDANCE WITH THE INTERNATIONAL BUILDING CODE, IBC 2003; ACI 318-99; AISC MANUAL OF STEEL CONSTRUCTION, 9TH ED.; SPECIFICATION FOR THE DESIGN OF COLD FORMED STEEL STRUCTURAL MEMBERS AISI

REINFORCING CONCRETE NOTES:

1. CONCRETE CONSTRUCTION SHALL BE IN ACCORDANCE WITH THE AMERICAN CONCRETE INSTITUTE "BUILDING CODE REQUIREMENTS FOR REINFORCED CONCRETE," ACI 318-99.
2. ALL CONCRETE SHALL HAVE A SPECIFIED MINIMUM COMPRESSIVE STRENGTH OF 3000 P.S.I. AT 28 DAYS.
3. SLUMP 3" to 5" WITH MAX. WATER/CEMENT RATIO OF 0.45
4. PROVIDE 5 % ±1-1/2 % OF ENTRAINED AIR IN CONCRETE PERMANENTLY EXPOSED TO THE WEATHER.
5. CONSTRUCTION JOINTS AS SHOWN ON THE DRAWING. CONTRACTOR SHALL SUBMIT ANY ADDITIONAL CONSTRUCTION JOINTS FOR ENGINEER'S REVIEW.
6. EMBEDDED CONDUITS, PIPES AND SLEEVES SHALL MEET THE REQUIREMENTS OF ACI 318-99 SECT. 6.3. INCLUDING THE FOLLOWING:
   - A. CONDUITS AND PIPES EMBEDDED WITHIN A SLAB, WALL, OR BEAM (OTHER THAN THOSE PASSING THROUGH) SHALL NOT BE LARGER IN OUTSIDE DIMENSION THAN 1/3 THE OVERALL THICKNESS OF THE SLAB, WALL OR BEAM IN WHICH THEY ARE EMBEDDED.
   - B. CONDUITS, PIPES AND SLEEVES SHALL NOT BE SPACED CLOSER THAN THREE DIAMETERS OR WIDTHS ON CENTER.
   - C. EMBEDDED CONDUITS, PIPES AND SLEEVES SHALL BE OF UNCOATED OR GALVANIZED IRON OR STEEL NOT THINNER THAN STANDARD SCHEDULE 40 STEEL PIPE.
7. REINFORCING STEEL SHALL BE DEFORMED BARS IN CONFORMANCE WITH ASTM A615 GRADE 60.
8. DETAILING OF REINFORCING STEEL IN ACCORDANCE WITH ACI DETAILING MANUAL
9. MIN. LAP 40 X BAR DIA. (NOMINAL)
10. STEEL CLEAR COVER:
    GRADE BEAM.- 1-1/2" TOP, 3" BOTTOM , AND 2" SIDE (FORMED). 3" SIDE (PLACE AGAINST EARTH)
    SLAB ON GRADE.- 2" TOP
11. USE WATER CURING FOR CONCRETE
12. PROVIDE CORNER AND INTERSECTION REINFORCEMENT AS SHOWN IN STD. DETAIL 10/S3.3, 14/S3.3
13. CONCRETE DESIGNED TO BE PUMPED SHALL BE SO NOTED ON THE MIX DESIGNS AND SHALL HAVE MIX PROPORTIONS COMPATIBLE WITH THE PUMPING PROCESS.
14. ALL MAJOR DEFECTIVE AREAS IN CONCRETE INCLUDING HONEYCOMBS, CRACKS IN EXCESS OF 0.01", AND SPALLS THAT OCCUR IN LOAD CARRYING MEMBERS VITAL TO STRUCTURAL INTEGRITY SHALL BE REPAIRED USING EPOXY ADHESIVE, EPOXY MORTAR AND/OR POLYMER CONCRETE. EXTENT AND DETERMINATION OF MAJOR DEFECTIVE AREAS SHALL BE DETERMINED BY THE ENGINEER.
15. REFER TO TxDOT STANDARD 1993 SPECIFICATIONS FOR CURING, FINISHES AND REBAR PREPARATION
16. PROVIDE #5 DOWELS AT 16" O. C. 1'-4" LONG BETWEEN SIDEWALKS AND FOUNDATION. WRAP ONE END WITH 30# FELP PAPER REFER TO SITE PLAN FOR LOCATION OF SIDEWALKS.
17. GRADE BEAM SHALL HAVE A MINIMUM OF 18" INTO THE GROUND, FROM FINISHED GRADE TO BOTTOM OF BEAM. REFER TO CIVIL GRADING PLAN FOR FINISH GRADE ELEVATIONS.

CONCRETE FORMWORK

1. THE DESIGN, CONSTRUCTION, AND SAFETY OF ALL FORM WORK SHALL BE THE RESPONSIBILITY OF THE GENERAL CONTRACTOR. ALL FORMS, SHORES, BACK SHORES, FALSEWORK, BRACING, AND OTHER TEMPORARY SUPPORTS SHALL BE ENGINEERED TO SUPPORT ALL LOADS IMPOSED INCLUDING THE WET WEIGHT OF CONCRETE, CONSTRUCTION EQUIPMENT, LIVE LOADS, LATERAL LOADS DUE TO WIND AND WET UNBALANCED CONCRETE. THE CONTRACTOR SHALL ALSO BE RESPONSIBLE FOR DETERMINING WHEN TEMPORARY SUPPORTS, SHORES, BACKSHORING, AND OTHER BRACING SHALL BE SAFELY REMOVED.

STEEL FRAMING NOTES

1. STRUCTURAL STEEL SHALL CONFORM TO ASTM A36. STRUCTURAL TUBING SHALL CONFORM TO ASTM A500, GRADE B, Fy = 46 KSI. CONNECTIONS SHALL CONFORM TO REQUIREMENTS OF AISC.
2. CONNECTIONS SHALL BE ASTM A325 BOLTS OR WELDED TO CARRY THE TABULATED AISC CAPACITY FOR THE SPAN OF THE MEMBER.
3. COLUMN BASE PLATES SHALL BE SET TO THE ELEVATION INDICATED ON THE DRAWINGS AND LEVELED USING STEEL SHIMS OR BY DOUBLE NUTS ON ANCHOR BOLTS. BASE PLATES SHALL THEN BE GROUTED WITH A MINIMUM 1" OF NON-SHRINK, HIGH STRENGTH NONMETALLIC GROUT. TIGHTEN ANCHOR BOLTS AFTER SUPPORTED MEMBERS HAVE BEEN POSITIONED AND PLUMBED.
4. WHERE METAL DECK IS SUPPORTED CONTINUOUSLY AT EDGES, WELD DECK TO STEEL SUPPORT AT 12" O. C. OR USE #12 SDS
5. ROOF DECK IS 1½" - 22 GAUGE TYPE F INTERMEDIATE RIB DECK COMPLYING WITH STEEL DECK INSTITUTE WITH MINIMUM I = 120 IN^4, SN = 120 IN^3 ATTACH TO SUPPORTING MEMBERS BY PLUG WELDING DIRECTLY THROUGH BOTTOM OF THE RIBS AT EVERY SUPPORT OR USE #12 SDS. WELD EACH SHEET AT BOTH SIDES SO THAT SPACING BETWEEN WELDS ACROSS THE WIDTH OF EACH SHEET DOES NOT EXCEED 18", IN ACCORDANCE WITH STEEL DECK INSTITUTE'S SPECIFICATIONS
6. FIELD CUTTING OF STRUCTURAL STEEL OR ANY FIELD MODIFICATION TO STRUCTURAL STEEL SHALL NOT BE MADE WITHOUT APPROVAL OF THE ENGINEER.

LIGHT GAGE STEEL FRAMING

1. LIGHT GAGE STEEL BASED ON USG STEEL FRAMING SYSTEMSOR APPROVED EQUIVALENT
2. FRAMING MEMBERS SHALL BE AS NOTED WITH STEEL BLOCKING AT MIDHEIGHT FOR WALLS GREATER THAN 8'-6" IN HEIGHT. EXTERIOR WALLS 6" STEEL STUDS 20 GA. INTERIOR WALLS 3 5/8" & 6" STEEL STUDS 20 GA.
3. ALL MEMBERS SHALL BE FORMED FROM STEEL HAVING A MINIMUM YIELD STRENGTH OF 40 KSI.
4. ALL TRACK AND PERIMETER CHANNEL SHALL BE UNPUNCHED, NOMINALLY THE SAME SIZE AND GAGE AS THE STUD UNO.

PRE-ENGINEERED METAL BUILDING

1. THE DESIGN OF THE STRUCTURE SYSTEM SHALL BE CLEAR RIGID FRAME WITH STRAIGHT COLUMNS AND ROOF BEAMS WITH A STANDING SEAM ROOF AND EXPANSION CLIPS.
2. ACTUAL BUILDING LENGTH SHALL BE STRUCTURAL LINE TO STRUCTURAL LINE, AND SHALL BE THE SAME AS NOMINAL LENGTH.
3. ACTUAL BUILDING WIDTH SHALL BE STRUCTURAL LINE TO STRUCTURAL LINE AND SHALL BE NOMINAL BUILDING WIDTH
4. REFER TO BUILDING ELEVATIONS FOR ROOF SLOPE
5. SEALED SHOP DRAWINGS AND CALCULATIONS FOR METAL BUILDING WITH PORCH SHALL BE SUBMITTED FOR ENGINEER'S APPROVAL
6. ALL COMPONENTS AND PARTS OF THE STRUCTURAL SYSTEM SHALL BE AS INDICATED ON THE DRAWING AND/OR SPECIFICATIONS.
7. ALL MODIFICATIONS WILL REQUIRE ENGINEER'S REVIEW.
8. ALL REACTIONS FOR FOUNDATION DESIGN SHALL BE SUPPLIED BY PRE-ENGINEERED BUILDING MANUFACTURER. NUMBER OF ANCHOR BOLTS AND DIAMETER SHALL BE SPECIFIED BY BUILDING MANUFACTURER.
9. FOUNDATION DESIGN WILL BE PROVIDED BY OWNER
10. BUILDING SHALL BE PRODUCED IN A MANUFACTURING FACILITY THAT IS CERTIFIED BY AISC- CATEGORY MB.
11. ALL STRUCTURAL MILL SECTIONS OR WELDED PLATE SECTIONS SHALL BE DESIGNED IN ACCORDANCE WITH AISC SPECIFICATION FOR THE DESIGN FABRICATION AND ERECTION OF STRUCTURAL STEEL FOR BUILDINGS AND ALL COLD FORMED STEEL MEMBERS SHALL BE IN ACCORDANCE WITH THE AISI LATEST EDITION.
12. THE STRUCTURAL SYSTEM WILL BE DESIGNED IN ACCORDANCE WITH IBC 2003 AND THE REQUIREMENTS OF THE LOCAL CITY/TOWN

DEAD LOAD	ACTUAL WEIGHT OF MATERIALS
LIVE LOAD ROOF	20 PSF
WIND	120 MPH EXPOSURE C
SNOW	AS PER CODE

MECHANICAL AND OTHER ATTACHMENTS TO ROOF 10 PSF
WEIGHT OF MAJOR EQUIPMENT SHALL BE CONSIDERED INDIVIDUALLY

13. WELDING SHALL CONFORM TO AWS D1.1

COORDINATION

1. IT IS THE RESPONSIBILITY OF THE GENERAL CONTRACTOR TO OBTAIN ALL CONTRACT DOCUMENTS AND LATEST ADDENDA AND TO SUBMIT SUCH DOCUMENTS TO ALL SUBCONTRACTORS AND MATERIAL SUPPLIERS PRIOR TO THE SUBMITTAL OF SHOP DRAWINGS, FABRICATION OF ANY STRUCTURAL MEMBERS, AND CONSTRUCTION.
2. THE GENERAL CONTRACTOR SHALL COMPARE THE ARCHITECTURAL, STRUCTURAL AND MECHANICAL DRAWINGS AND REPORT ANY DISCREPANCY BETWEEN EACH SET OF DRAWINGS AND WITHIN EACH SET OF DRAWINGS TO THE ARCHITECT AND ENGINEER PRIOR TO THE FABRICATION AND INSTALLATION OF ANY STRUCTURAL MEMBERS.
3. ONLY LARGER SLEEVE OPENINGS AND FRAMED OPENINGS IN STRUCTURAL FRAMING COMPONENT MEMBERS ARE INDICATED ON THE STRUCTURAL DRAWINGS. HOWEVER, ALL SLEEVES, INSERTS AND OPENINGS, INCLUDING FRAMES AND/OR SLEEVES SHALL BE PROVIDED FOR PASSAGE, PROVISION AND/OR INCORPORATION OF THE WORK OF THE CONTRACT, INCLUDING BUT NOT LIMITED TO MECHANICAL, ELECTRICAL AND PLUMBING WORK. THIS WORK SHALL INCLUDE THE COORDINATION OF SIZES, ALIGNMENT, DIMENSIONS, POSITION, LOCATIONS, ELEVATIONS AND GRADES AS REQUIRED TO SERVE THE INTENDED PURPOSE. OPENINGS NOT INDICATED ON THE STRUCTURAL DRAWINGS, BUT REQUIRED AS NOTED ABOVE, SHALL BE SUBMITTED TO THE ENGINEER FOR REVIEW.
4. REFER TO ARCHITECTURAL, MECHANICAL, ELECTRICAL AND PLUMBING DRAWINGS FOR FLOOR ELEVATIONS, SLOPES, DRAINS AND LOCATION OF DEPRESSED AND ELEVATED FLOOR AREAS.
5. COMPATIBILITY OF THE STRUCTURE AND PROVISIONS FOR BUILDING EQUIPMENT SUPPORTED ON OR FROM STRUCTURAL COMPONENTS SHALL BE VERIFIED AS TO SIZE, DIMENSIONS, CLEARANCES, ACCESSIBILITY, WEIGHTS AND REACTION WITH THE EQUIPMENT FOR WHICH THE STRUCTURE HAS BEEN DESIGNED PRIOR TO SUBMISSION OF SHOP DRAWINGS AND DATA FOR EACH PIECE OF EQUIPMENT AND FOR STRUCTURAL COMPONENTS. DIFFERENCES SHALL BE NOTED ON THE SUBMITTALS. SUCH DETAILS SHALL APPLY WHETHER OR NOT THEY ARE KEYED IN AT EACH LOCATION. QUESTIONS REGARDING APPLICABILITY OF TYPICAL DETAILS SHALL BE DETERMINED BY THE ENGINEER.
6. SHOP DRAWINGS SHALL BE PREPARED FOR ALL STRUCTURAL ITEMS AND SUBMITTED FOR REVIEW BY THE ENGINEER. CONTRACT DRAWINGS SHALL NOT BE REPRODUCED AND USED AS SHOP DRAWINGS. ALL ITEMS DEVIATING FROM THE CONTRACT DRAWINGS OR FROM PREVIOUSLY SUBMITTED SHOP DRAWINGS SHALL BE CLOUDED.
7. THE DETAILS DESIGNATED AS "TYPICAL DETAILS" APPLY GENERALLY TO THE DRAWINGS IN ALL AREAS WHERE CONDITIONS ARE SIMILAR TO THOSE DESCRIBED IN THE DETAILS.
8. ALL DIMENSIONS AND CONDITIONS OF EXISTING CONSTRUCTION SHALL BE VERIFIED BY THE CONTRACTOR AT THE JOB SITE. DIFFERENCES BETWEEN EXISTING CONSTRUCTION AND THE DRAWINGS SHALL BE REFERRED TO THE ARCHITECT. DIFFERENCES SHALL ALSO BE CLOUDED ON THE SHOP DRAWINGS.
9. THE DESIGN AND PROVISION OF ALL TEMPORARY SUPPORTS SUCH AS GUYS, BRACES, FALSEWORK, SUPPORTS AND ANCHORS FOR SAFETY LINES, CRIBBING OR ANY OTHER TEMPORARY ELEMENTS REQUIRED FOR THE EXECUTION OF THE CONTRACT ARE NOT INCLUDED IN THE DRAWINGS AND SHALL BE THE RESPONSIBILITY OF THE CONTRACTOR. TEMPORARY SUPPORTS SHALL NOT RESULT IN THE OVER STRESS OR DAMAGE OF THE ELEMENTS TO BE BRACED NOR ANY ELEMENTS USED AS BRACE SUPPORTS.
10. THE CONTRACT STRUCTURAL DRAWINGS AND SPECIFICATIONS REPRESENT THE FINISHED STRUCTURE, EXCEPT WHERE SPECIFICALLY SHOWN, AND DO NOT INDICATE THE METHOD OR MEANS OF CONSTRUCTION. THE CONTRACTOR SHALL SUPERVISE AND DIRECT THE WORK AND SHALL BE SOLELY RESPONSIBLE FOR ALL CONSTRUCTION MEANS, METHODS, PROCEDURES, TECHNIQUES, AND SEQUENCE.
11. THE ENGINEER SHALL NOT HAVE CONTROL OF, AND SHALL NOT BE RESPONSIBLE FOR, CONSTRUCTION MEANS, METHODS, TECHNIQUES, SEQUENCES, OR PROCEDURES, FOR SAFETY PRECAUTIONS AND PROGRAMS IN CONNECTION WITH THE WORK, FOR THE ACTS OR OMISSION OF THE CONTRACTOR, SUBCONTRACTOR, OR ANY OTHER PERSONS PERFORMING ANY OF THE WORK, OR FOR THE FAILURE OF ANY OF THEM TO CARRY OUT THE WORK IN ACCORDANCE WITH THE CONTRACT DOCUMENTS.
12. PERIODIC SITE OBSERVATION BY FIELD REPRESENTATIVES OF TXDOT IS SOLELY FOR THE PURPOSE OF DETERMINING IF THE WORK OF THE CONTRACTOR IS PROCEEDING IN ACCORDANCE WITH THE STRUCTURAL CONTRACT DOCUMENTS. THIS LIMITED SITE OBSERVATION IS NOT INTENDED TO BE AN EXHAUSTIVE CHECK OF THE QUALITY OR QUANTITY OF THE WORK, BUT RATHER PERIODIC IN AN EFFORT TO INFORM THE OWNER AGAINST DEFECTS AND DEFICIENCIES IN THE WORK OF THE CONTRACTOR.

STRUCTURAL MASONRY

1. CONCRETE MASONRY UNITS SHALL BE LIGHTWEIGHT HOLLOW LOAD BEARING TYPE N-1 UNITS WHICH CONFORM TO ASTM C90.
2. MINIMUM COMPRESSIVE PRISM STRENGTH OF THE MASONRY (F'm) SHALL BE 1500 POUNDS PER SQUARE INCH WHEN TESTED AT 28 DAYS. PROVIDE PRISM TESTS FOR EACH 5000 SQUARE FEET OF WALL IN ACCORDANCE WITH ASTM E447 METHOD B.
3. CHASES SHALL BE BUILT IN AND NOT CUT IN. CHASES SHALL BE PLUMB AND SHALL BE MINIMUM ONE-UNIT LENGTH FROM JAMBS OF OPENINGS. ANCHORS, WALL PLUGS, ACCESSORIES AND OTHER ITEMS TO BE BUILT IN SHALL BE INSTALLED AS THE MASONRY WORK PROGRESSES. ALL CUTTING AND FITTING OF MASONRY, INCLUDING THAT REQUIRED TO ACCOMMODATE THE WORK OF OTHER SECTIONS SHALL BE DONE BY MASONS WITH MASONRY SAWS.
4. MORTAR SHALL CONFORM TO ASTM C270, TYPE S, WITH A MINIMUM COMPRESSIVE STRENGTH OF 1800 PSI WHEN TESTED IN ACCORDANCE WITH ASTM C780. MORTAR IN CONTACT WITH EARTH SHALL BE TYPE M. MASONRY CEMENT SHALL NOT BE USED.
5. REINFORCE CONCRETE MASONRY UNITS WITH LADDER TYPE HOT DIP GALVANIZED (ASTM A153, CLASS B-2 COATING) COLD-DRAWN STEEL CONFORMING TO ANSI/ASTM A82, WITH (NO. 9 GAUGE OR 3/16 INCH) SIDE RODS WITH NO. 9 GAUGE CROSS RODS. SPACE JOINT REINFORCING AT 16" ON CENTER, UNLESS NOTED OTHERWISE. LAP JOINT REINFORCING 14" AT SPLICES. JOINT REINFORCING SHALL BE DISCONTINUOUS AT CONTROL AND EXPANSION JOINTS.
6. PROVIDE REINFORCED AND GROUTED VERTICAL CELLS AS NOTED ON THE DRAWINGS. GROUT AND REINFORCE THE FIRST CELL AT THE ENDS OF WALLS AND AT CORNERS.
7. REINFORCE EACH CELL OF CONCRETE MASONRY UNITS EACH SIDE OF FRAMED OPENINGS WITH 1-#4 VERTICAL. GROUT CELL FULL HEIGHT OF WALL.
8. LAP REINFORCING BARS IN GROUTED MASONRY 40 BAR DIAMETERS MINIMUM, UNLESS NOTED OTHERWISE. EXCEPT AT FOUNDATIONS, SPLICES IN REINFORCING SHALL BE STAGGERED SO THAT NOT MORE THAN 1/2 OF ALL BARS ARE SPLICED AT THE SAME LOCATION.
9. SEE ARCHITECT'S DRAWINGS FOR VERTICAL HEIGHT OF MASONRY WALLS.
10. ALL MASONRY WALLS SHOWN ON THE ARCHITECTURAL AND STRUCTURAL DRAWINGS HAVE BEEN DESIGNED TO RESIST THE PRESCRIBED CODE VERTICAL AND LATERAL LOADS APPLIED TO THEM IN THE FINAL DESIGN ONLY ASSUMING FULL BRACING TOP, BOTTOM, AND/OR SIDE OF WALL AS SHOWN. IT IS THE RESPONSIBILITY OF THE CONTRACTOR TO PROPERLY AND ADEQUATELY BRACE ALL MASONRY WALLS AT ALL STAGES DURING CONSTRUCTION TO RESIST ERECTION LOADS AND LATERAL LOADS OCCURRING DURING CONSTRUCTION.
11. PLACEMENT OF REINFORCING STEEL:
    - A. VERTICAL BARS SHALL BE HELD IN POSITION AT THE TOP AND BOTTOM AND AT INTERVALS NOT EXCEEDING 6'-0" WITH A MINIMUM CLEARANCE OF 1/4" FROM THE FACE OF THE MASONRY AND NOT LESS THAN ONE BAR DIAMETER OR 1" (WHICHEVER IS GREATER) BETWEEN ADJACENT BARS.
    - B. ALL DOWELS SHALL BE GROUTED INTO A CELL THAT LAPS THE VERTICAL STEEL. WHEN A FOUNDATION DOWEL DOES NOT LINE UP WITH A CORRESPONDING VERTICAL BAR, IT SHALL BE SLOPED NOT MORE THAN ONE HORIZONTAL TO SIX VERTICAL.
    - C. ALL HORIZONTAL REINFORCING STEEL SHALL BE PLACED IN CONTINUOUS BOND BEAM OR LINTEL BLOCK UNITS AND SHALL BE SOLIDLY GROUTED IN PLACE. MAINTAIN A MINIMUM OF ONE BAR DIAMETER OR 1"(WHICHEVER IS GREATER) CLEARANCE BETWEEN ADJACENT BARS AND A MINIMUM OF 1/4" CLEARANCE FROM THE FACE OF THE MASONRY.
12. REFER TO ARCHITECTURAL DRAWINGS FOR ADDITIONAL BOUND BEAM. PROVIDE ADDITIONAL BOUND BEAMS SHOWN ON THE ARCHITECTURAL DRAWINGS EVEN THOUGH THEY MAY NOT BE SHOWN ON THE STRUCTURAL DRAWINGS.

SCHEDULE OF ABBREVIATIONS

A
- ACI — AMERICAN CONCRETE INSTITUTE
- ADD'L — ADDITIONAL
- AISC — AMERICAN INSTITUTE OF STEEL CONSTRUCTION
- ASTM — AMERICAN SOCIETY FOR TESTING OF MATERIALS
- AWS — AMERICAN WELDING SOCIETY

B
- BLDG — BUILDING
- BM — BENCH MARK OR BEAM
- BOT — BOTTOM

C
- CJ — CONTROL JOINT
- CL — CENTERLINE
- COL — COLUMN
- CONC — CONCRETE
- CONT — CONTINUOUS

D
- DIA — DIAMETER
- DWL — DOWEL

E
- E — EAST
- EA — EACH
- EF — EACH FACE
- EJ — EXPANSION JOINT
- EW — EACH WAY
- EXIST — EXISTING
- EXT — EXTERIOR

F
- FDN — FOUNDATION
- FF — FINISH FLOOR

G
- GA — GAUGE (GAGE)
- GALV. — GALVANIZED
- GR — GRADE

H
- HB — HOSE BIBB
- HD — HOT DIPPED
- HP — HIGH POINT
- HORIZ — HORIZONTAL
- HT — HEIGHT

I
- INSUL — INSULATION
- IBC — INTERNATIONAL BUILDING CODE
- INT — INTERIOR

J
- J — JUNCTION
- JB — JUNCTION BOX
- JT — JOINT

K
- KSI — THOUSAND POUNDS PER SQUARE INCH

L
- L — LENGTH
- LL — LIVE LOAD
- LLH — LONG LEG HORIZONTAL
- LP — LOW POINT
- LVL — LEVEL

M
- M — MOTOR
- MAT'L — MATERIAL
- MAX — MAXIMUM
- MIN — MINIMUM
- MPH — MILES PER HOUR
- MTL — METAL

N
- N — NORTH
- NO — NUMBER
- NTS — NOT TO SCALE

O
- OC — ON CENTER
- OH — OVERHEAD
- OSL — OUTSIDE

P
- PART — PARTITION
- PI — PLASTICITY INDEX
- PSF — POUNDS PER SQUARE FOOT
- PSI — POUNDS PER SQUARE INCH
- PT — POINT

Q
- QC — QUALITY CONTROL

R
- REF — REFERENCE
- REINF — REINFORCING OR (REINFORCED)
- REQ'D — REQUIRED

S
- S — SOUTH
- SDS — SELF DRILLING SCREW
- SPEC — SPECIFICATION
- STD — STANDARD
- STL — STEEL
- STR — STRUCTURAL

T
- T&B — TOP AND BOTTOM
- TxDOT — TEXAS DEPARTMENT OF TRANSPORTATION
- TYP — TYPICAL

U
- UNO — UNLESS NOTED OTHERWISE

V
- VERT — VERTICAL

W
- W — WIDTH, WASTE OR WEST
- W/ — WITH
- WT — WEIGHT

SYMBOLS

- Ø — DIAMETER
- * — CONTRACTOR MAY ADJUST THIS DIMENSION TO SUIT PREFABRICATED METAL BLDG. WALL PANELS
- X / AX.X — FLOOR OR FOUNDATION DETAIL NUMBER
- X/SX.X — FOUNDATION SECTION MARK
- DETAIL SECTION MARK
- SLOPE ARROW

STEEL LINTEL SCHEDULE

SIZE	CLEAR OPENING	REMARKS	DETAIL
L 4 X 4 X 3/8	0'-0" UP TO 8'-0"	MIN. OF 8" BEARING @ EA. END	
L 6 X 4 X 3/8	8'-0" UP TO 11'-0"	MIN. OF 8" BEARING @ EA. END	
L 7 X 4 X 3/8	11'-0" UP TO 16'-0"	MIN. OF 8" BEARING @ EA. END	

STRUCTURAL NOTES

NOTE: THIS DRAWING WAS CREATED FOR PRODUCTION ON 22" x 34" SHEET SIZE. DO NOT SCALE PRINTS.

Texas Department of Transportation
125 E. 11th Street
Austin, Texas 78701-2483
(512) 416-3048
Copyright © 2005 Texas Department of Transportation

THIS DOCUMENT IS RELEASED FOR THE PURPOSE OF INFORMATION ONLY
NOT FOR REGULATORY APPROVAL, PERMITTING, OR CONSTRUCTION.

WACO AREA ENGINEER AND MAINTENANCE FACILITY
WACO, MCLENNAN COUNTY
WACO DISTRICT

Revisions

Drawn by: S. F.
Project No. CBC4704-00672
Date 05.21.2007
Sheet No. S1.1
of sheets

CADFILE: T:\MNTFMD02FTW\CBC4704-00-037\02-77-4704000537\Acad\prototypical pdfs\waco\Acad\Struct\672_S1_1.dwg Plotted: Fri. Aug. 07, 2009 @ 1:45 PM By: MBAZAN

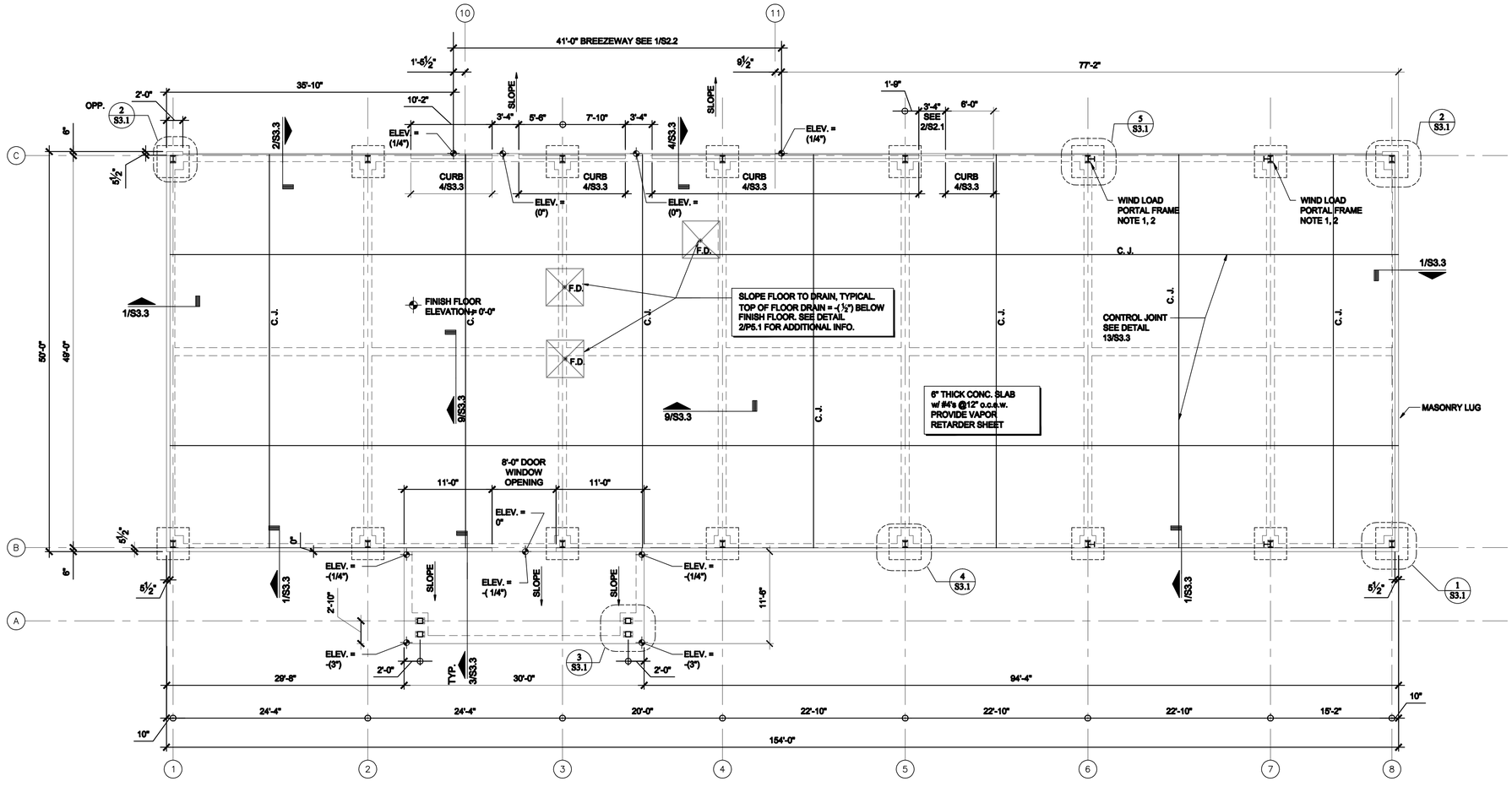

NORTH

1 FOUNDATION PLAN - OFFICE BUILDING

SCALE: 1/8" = 1' - 0"

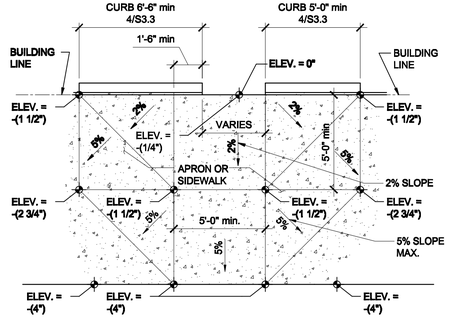

NOTES: 1. PROVIDE #5 DOWELS AT 12" O. C. AGAINST BUIDING FOUNDATION FOR SIDEWALKS LOCATED AGAINST BUILDING REF. TO ARCHITECTURAL SITE PLAN

2 PLAN DETAIL @ EXTERIOR DOOR

SCALE: 1/4" = 1' - 0"

NOTES:

1. LOCATION OF WIND PORTAL FRAME AS PER PRE-ENGINEER FABRICATOR
2. SIZE OF FOOTING SHALL BE ADJUSTED TO ACCOMMODATE WIND PORTAL FRAME
3. SLOPE CONCRETE APRON AT A RATE OF 2%
4. SLOPE CONCRETE AT ALL EXIT DOORS AT A RATE OF 2% (TYPICAL)
5. ASSUMED FINISH FLOOR ELEVATION = 0'-0" UNLESS NOTED OTHERWISE. SEE CIVIL DWGS. FOR ACTUAL ELEVATIONS.
6. TOP OF STRUCTURAL CONCRETE ELEVATION = FINISH FLOOR. UNLESS RECESSED TO RECEIVE TOPPING OR FLOORING MATERIALS.
7. REFER TO THE ARCHITECTURAL DRAWINGS FOR EXACT LOCATIONS OF FLOOR RECESSES, DROPS AND SLOPES NOT DIMENSIONED ON PLAN.
8. SEE PLUMBING DWG'S FOR FLOOR DRAINS

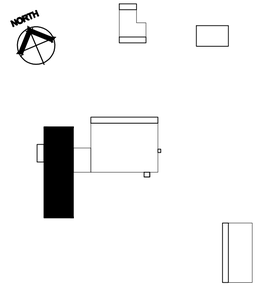

KEY PLAN

FOUNDATION PLAN - OFFICE

NOTE: THIS DRAWING WAS CREATED FOR PRODUCTION ON 22" x 34" SHEET SIZE. DO NOT SCALE PRINTS.

Texas Department of Transportation
125 E. 11th Street
Austin, Texas 78701-2483
(512) 416-2000

Copyright © 2005 Texas Department of Transportation

THIS DOCUMENT IS RELEASED FOR THE PURPOSE OF INFORMATION ONLY
NOT FOR REGULATORY APPROVAL, PERMITTING, OR CONSTRUCTION.

WACO AREA ENGINEER AND MAINTENANCE FACILITY
WACO, MCLENNAN COUNTY
WACO DISTRICT

Revisions

Drawn by: S. F.
Project No. CBC4704-00572
Date 05.21.2007
Sheet No.

S2.1
of sheets

CADFILE: T:\MAINTPA\D02FTWCBC4704-00-00572\02-77-4704D00572\Acad\proto\typical pdf\sheets\Acad\Sheets\572_S2_1.dwg Plotted: Fri, Aug. 07, 2009 @ 1:40 PM By: MBAZAN

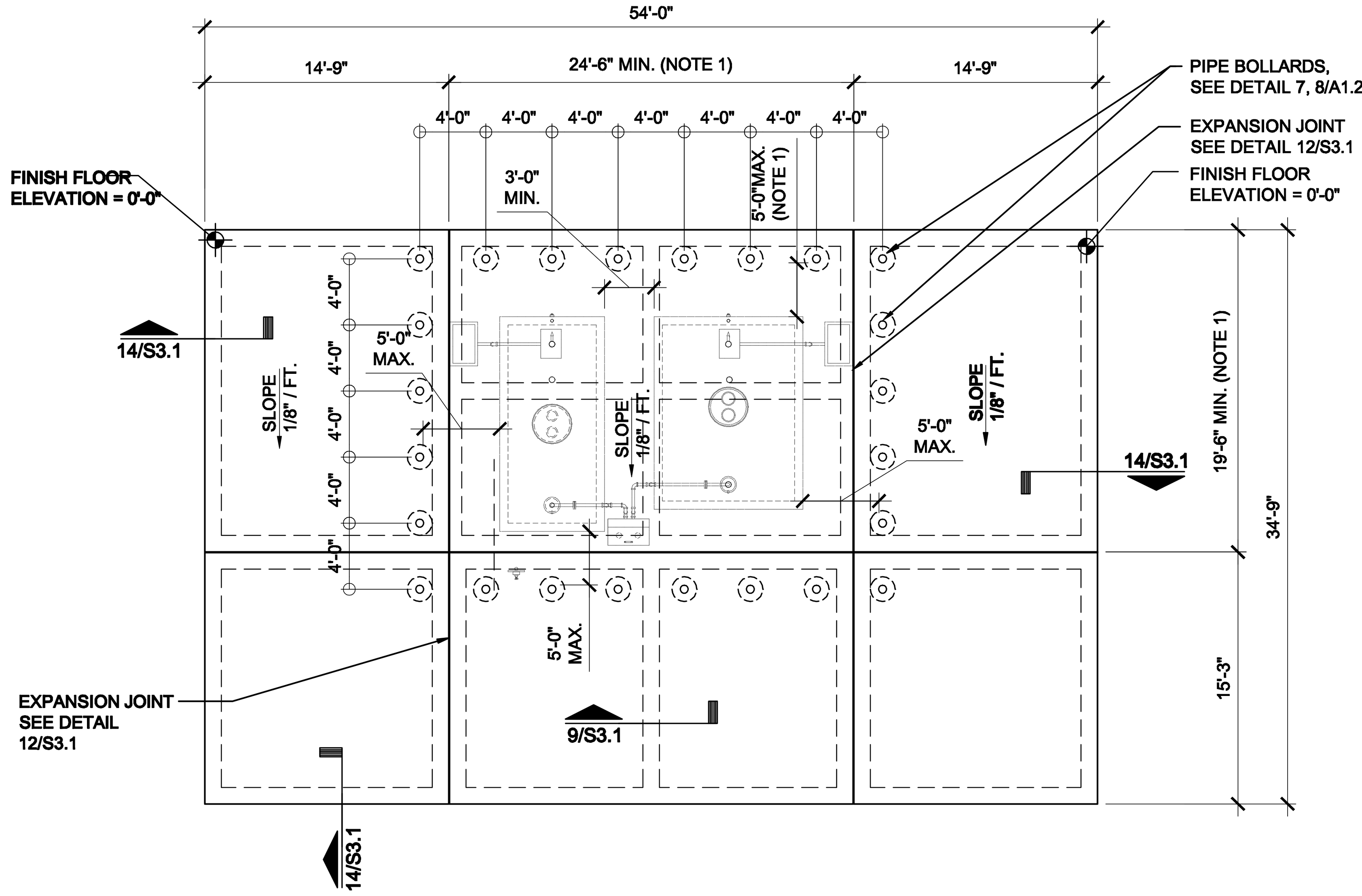

NOTES:
1. CONCRETE SLAB SIZE IS BASED BY SPECIFIED TANKS. DIMENSIONS MAY VARY PER SELECTED MANUFACTURER OF TANKS. CONTRACTOR IS RESPONSIBLE FOR MAKING ADJUSTMENTS TO CONCRETE SLAB AND MEETING THE MIN. REQUIRED CLEARANCES BETWEEN TANK TO TANK AND TANKS TO EDGE OF BOLLARDS.
2. REFER TO ARCHITECTURAL DWGS FOR LOCATION AND ORIENTATION OF FOUNDATION PAD

NORTH

2 FOUNDATION PLAN - FUEL STATION

SCALE: 1/8" = 1' - 0"

NOTES:
1. LOCATION OF WIND PORTAL FRAME AS PER PRE-ENGINEER FABRICATOR
2. SIZE OF FOOTING SHALL BE ADJUSTED TO ACCOMMODATE WIND PORTAL FRAME
3. SLOPE CONCRETE APRON AT A RATE OF 2%
4. SLOPE CONCRETE AT ALL EXIT DOORS AT A RATE OF 2% (TYPICAL)
5. ASSUMED FINISH FLOOR ELEVATION = 0'-0" UNLESS NOTED OTHERWISE. SEE CIVIL DWGS. FOR ACTUAL ELEVATIONS.
6. TOP OF STRUCTURAL CONCRETE ELEVATION = FINISH FLOOR. UNLESS RECESSED TO RECEIVE TOPPING OR FLOORING MATERIALS.
7. REFER TO THE ARCHITECTURAL DRAWINGS FOR EXACT LOCATIONS OF FLOOR RECESSES, DROPS AND SLOPES NOT DIMENSIONED ON PLAN.
8. SEE PLUMBING DWG'S FOR FLOOR DRAINS
9. PROVIDE A 3'-0" X 3'0" X 18" FOOTING AT EACH LEG OF VEHICLE LIFT. COORDINATE WITH MANUFACTURER FOR EXACT LOCATION OF LEGS.

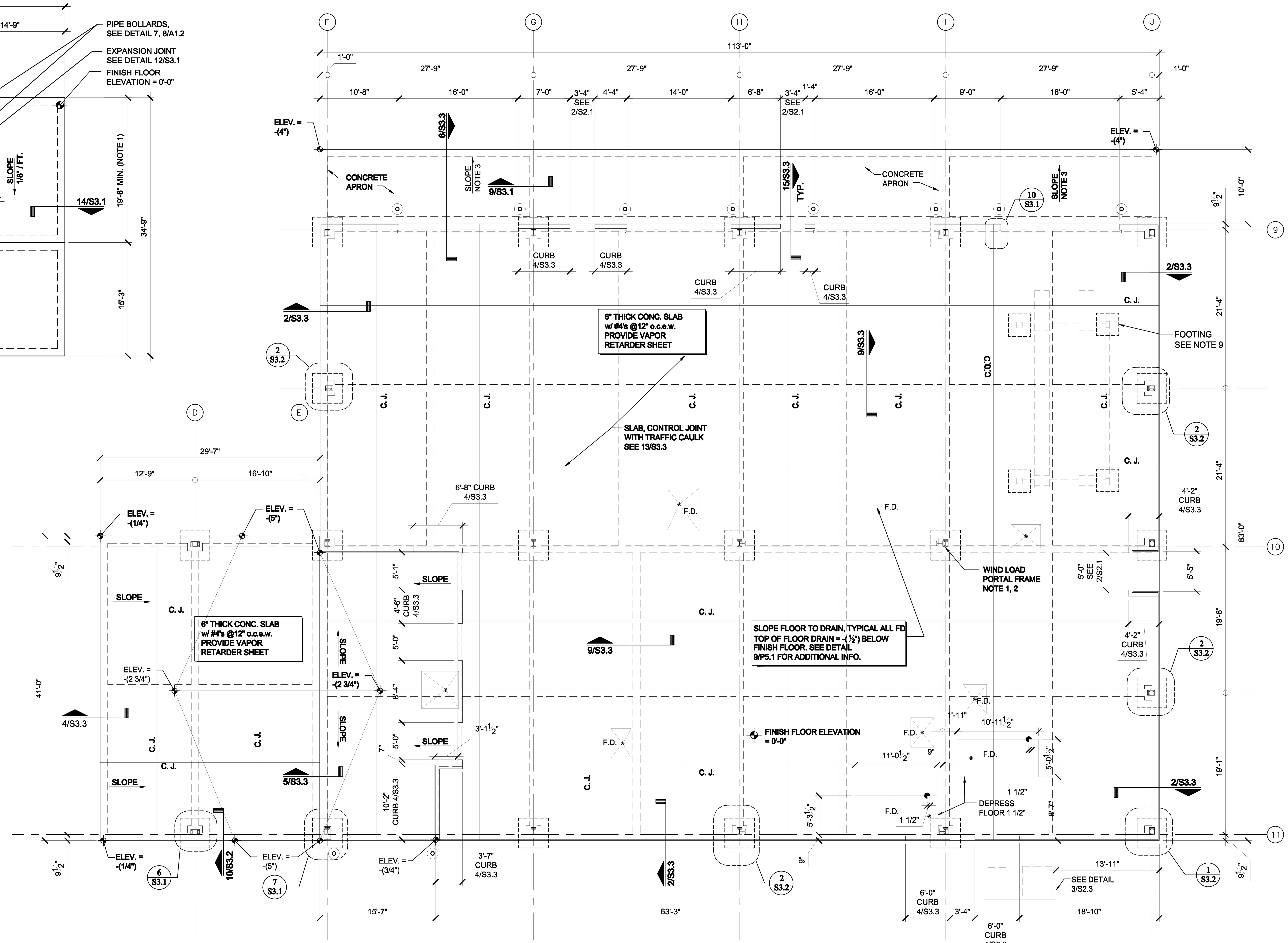

NORTH

1 FOUNDATION PLAN - LAB / SHOP BUILDING

SCALE: 1/8" = 1' - 0"

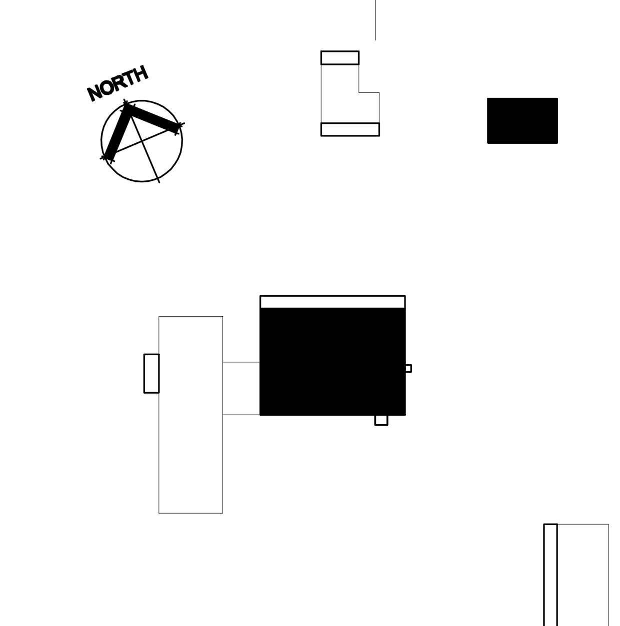

KEY PLAN

FOUNDATION PLAN - LAB / SHOP

NOTE: THIS DRAWING WAS CREATED FOR PRODUCTION ON 22" x 34" SHEET SIZE. DO NOT SCALE PRINTS.

Texas Department of Transportation
125 E. 11th Street
Austin, Texas 78701-2483
(512) 416-2040

Copyright © 2005 Texas Department of Transportation

THIS DOCUMENT IS RELEASED FOR THE PURPOSE OF INFORMATION ONLY NOT FOR REGULATORY APPROVAL, PERMITTING, OR CONSTRUCTION.

WACO AREA ENGINEER AND MAINTENANCE FACILITY
WACO, MCLENNAN COUNTY WACO DISTRICT

Revisions

Drawn by: S. F.
Project No. CBC4704-00672
Date 05.21.2007
Sheet No. S2.2 of sheets

CADFILE: T:\MNT\MD02\TWCBC4704-00-837\02-77-4704008\Acad\Struct\672_S2_2.dwg Plotted: Fri, Aug. 07, 2009 @ 1:47 PM By: MBAZAN

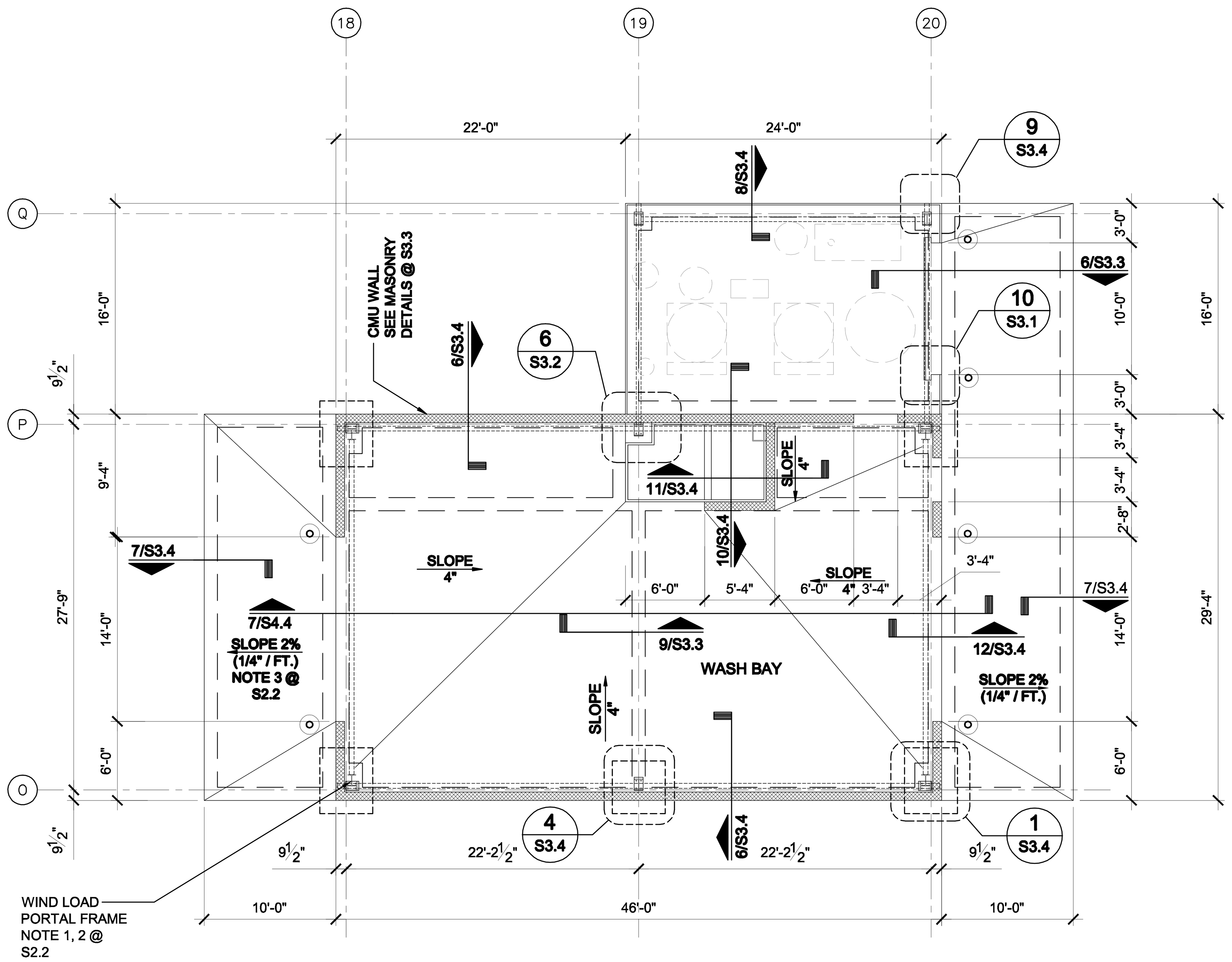

2 FOUNDATION PLAN - WASH BAY
SCALE: 1/8" = 1' - 0"

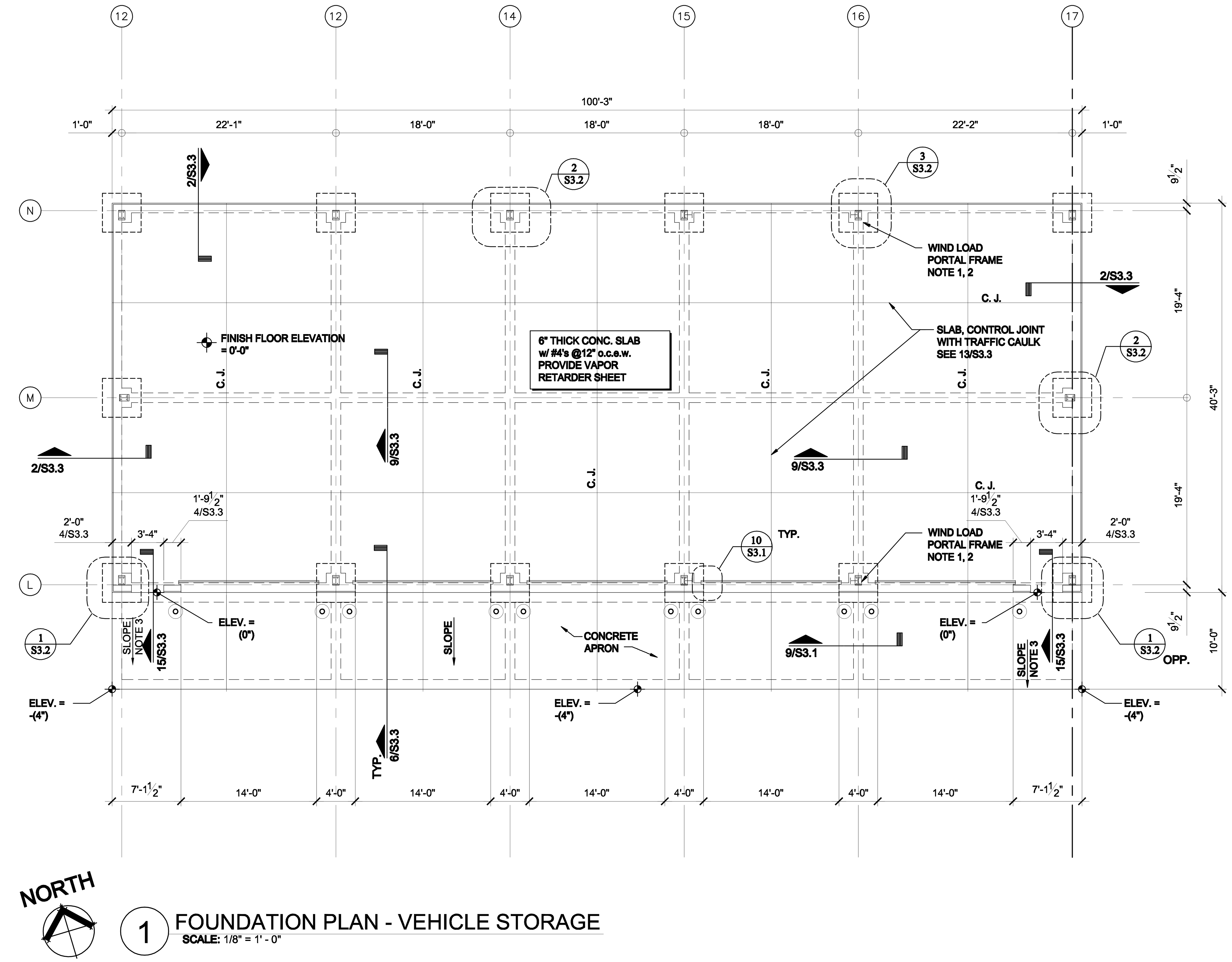

1 FOUNDATION PLAN - VEHICLE STORAGE
SCALE: 1/8" = 1' - 0"

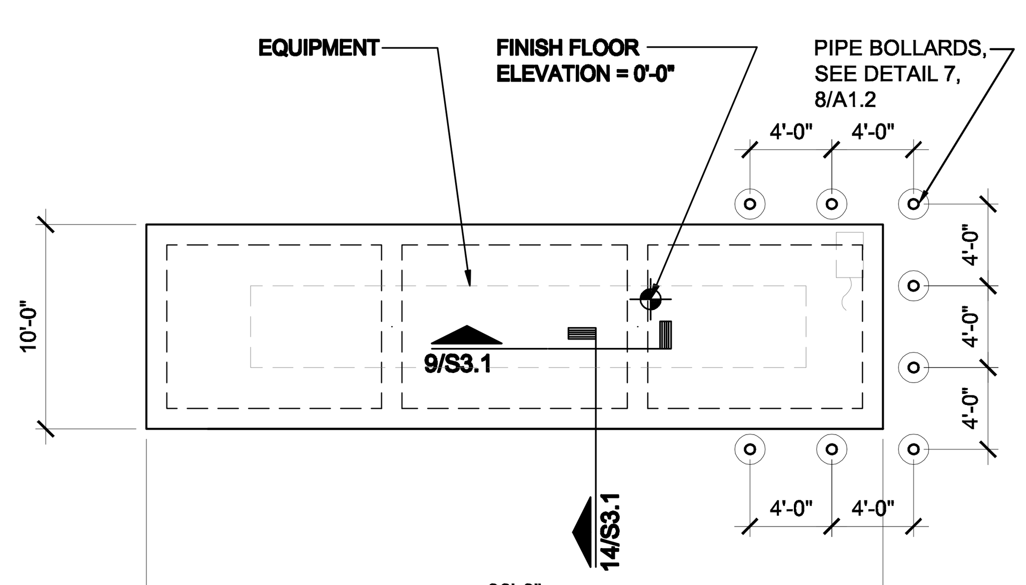

NOTE. REFER TO ARCHITECTURAL SITE PLAN FOR LOCATION

4 FOUNDATION PLAN - LPG TANK
SCALE: 1/8" = 1' - 0"

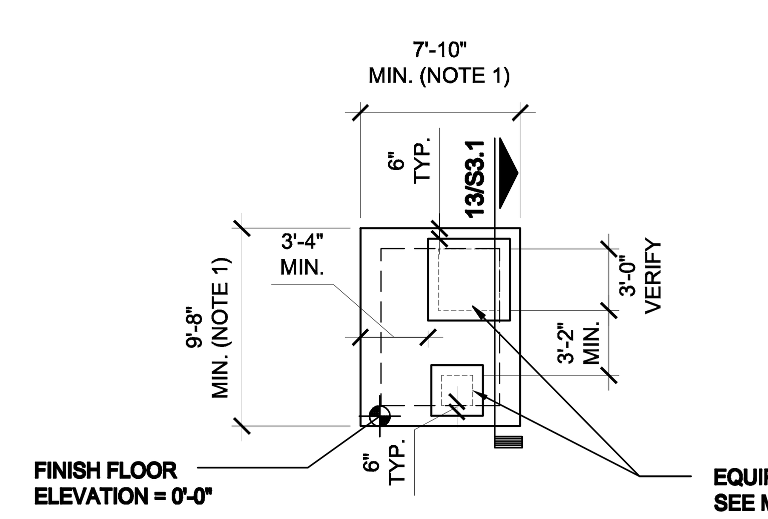

NOTES:
1. CONCRETE SLAB SIZE IS BASED BY SPECIFIED MECHANICAL EQUIPMENT. DIMENSIONS MAY VARY PER SELECTED MANUFACTURER OF EQUIPMENT. CONTRACTOR IS RESPONSIBLE FOR MAKING ADJUSTMENTS TO CONCRETE SLAB AND MEETING THE MIN. REQUIRED CLEARANCES BETWEEN TANK TO TANK AND TANKS TO EDGE OF BOLLARDS.
2. REFER TO ARCHITECTURAL DWGS FOR LOCATION AND ORIENTATION OF FOUNDATION PAD
3. PROVIDE DOWELS BETWEEN PAD AND BUILDING FOUNDATION.

3 FOUNDATION PLAN - TRANSFORMER
SCALE: 1/8" = 1' - 0"

NOTES:
1. LOCATION OF WIND PORTAL FRAME AS PER PRE-ENGINEER FABRICATOR
2. SIZE OF FOOTING SHALL BE ADJUSTED TO ACCOMMODATE WIND PORTAL FRAME
3. SLOPE CONCRETE APRON AT A RATE OF 2%
4. SLOPE CONCRETE AT ALL EXIT DOORS AT A RATE OF 2% (TYPICAL)
5. ASSUMED FINISH FLOOR ELEVATION = 0'-0" UNLESS NOTED OTHERWISE. SEE CIVIL DWGS. FOR ACTUAL ELEVATIONS.
6. TOP OF STRUCTURAL CONCRETE ELEVATION = FINISH FLOOR. UNLESS RECESSED TO RECEIVE TOPPING OR FLOORING MATERIALS.
7. REFER TO THE ARCHITECTURAL DRAWINGS FOR EXACT LOCATIONS OF FLOOR RECESSES, DROPS AND SLOPES NOT DIMENSIONED ON PLAN.

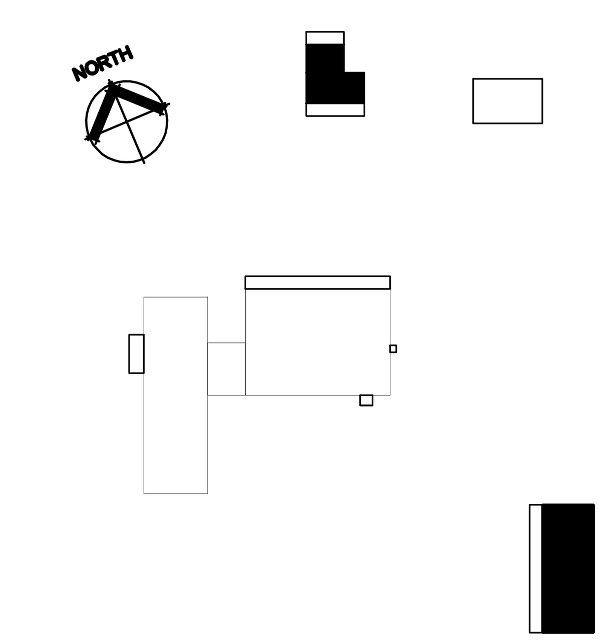

KEY PLAN

FOUNDATION PLAN - VEHICLE STORAGE

NOTE: THIS DRAWING WAS CREATED FOR PRODUCTION ON 22" x 34" SHEET SIZE. DO NOT SCALE PRINTS.

Texas Department of Transportation

THIS DOCUMENT IS RELEASED FOR THE PURPOSE OF INFORMATION ONLY
NOT FOR REGULATORY APPROVAL, PERMITTING, OR CONSTRUCTION.

WACO AREA ENGINEER AND MAINTENANCE FACILITY
WACO, MCLENNAN COUNTY
WACO DISTRICT

Revisions

Drawn by: S. F.
Project No. CBC4704-00672
Date 05.21.2007
Sheet No.
S2.3
of sheets

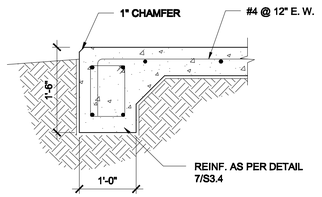

14 SECTION DETAIL
SCALE: 3/4" = 1' - 0"

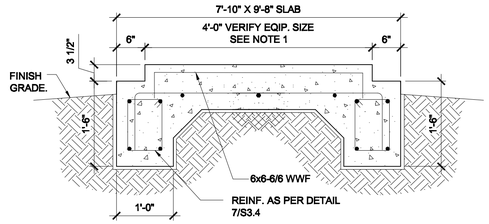

NOTE 1. REFER TO ARCHITECTURAL DWGS FOR LOCATION OF ELECTRIC GENERATOR PAD

13 SECTION DETAIL
SCALE: 3/4" = 1' - 0"

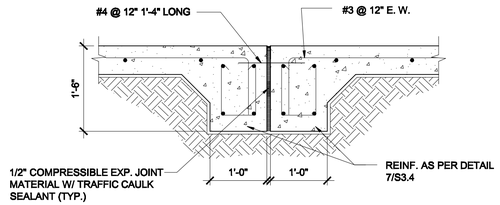

12 SECTION DETAIL
SCALE: 3/4" = 1' - 0"

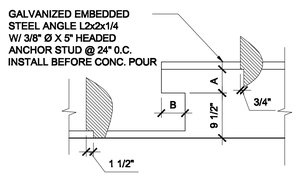

NOTE: DIMS. A & B AS PER DOOR MANUFACTURER'S REQUIREMENTS

10 PLAN DETAIL
SCALE: 3/4" = 1' - 0" TYPICAL

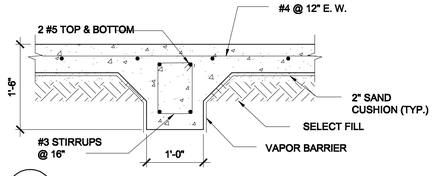

9 PLAN DETAIL
SCALE: 3/4" = 1' - 0"

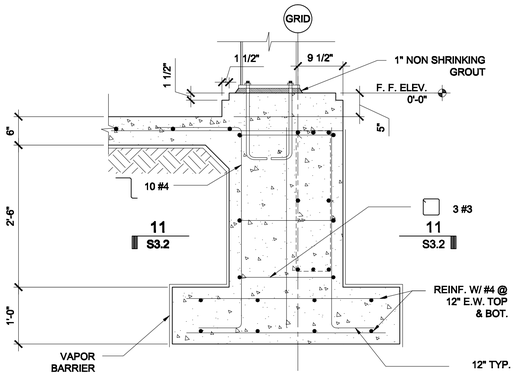

8 PLAN DETAIL
SCALE: 3/4" = 1' - 0"

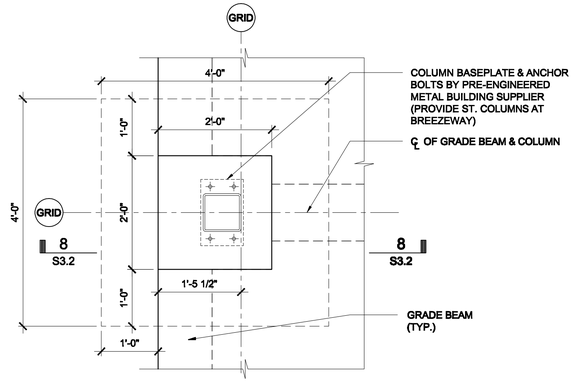

6 PLAN DETAIL
SCALE: 3/4" = 1' - 0" TYPICAL AT BREEZWAY

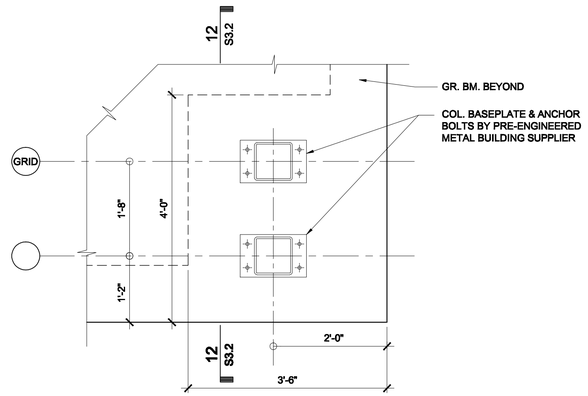

3 PLAN DETAIL
SCALE: 3/4" = 1' - 0"

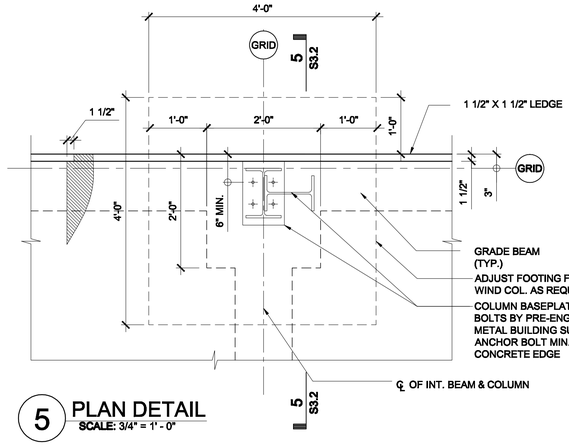

5 PLAN DETAIL
SCALE: 3/4" = 1' - 0"

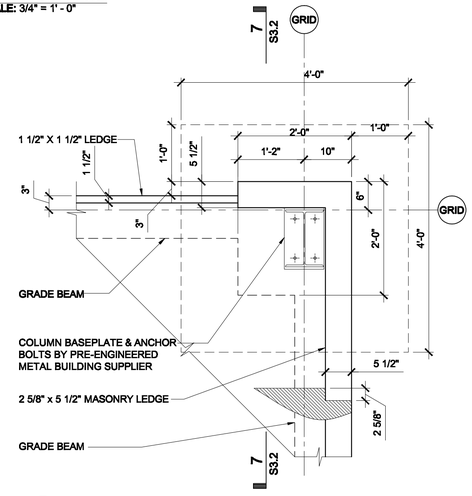

2 PLAN DETAIL
SCALE: 3/4" = 1' - 0"

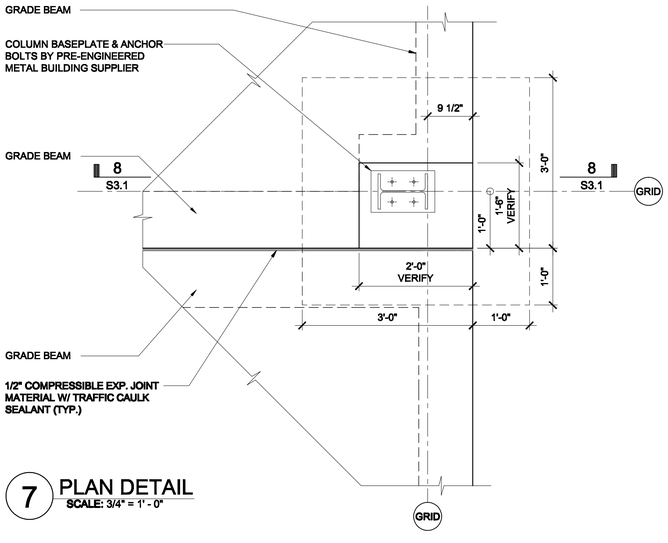

7 PLAN DETAIL
SCALE: 3/4" = 1' - 0"

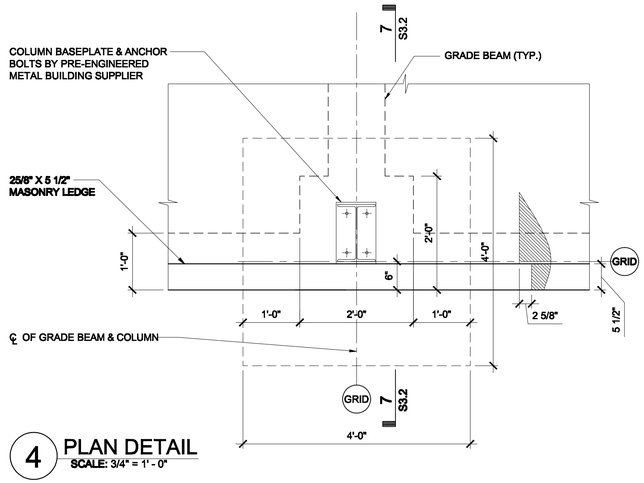

4 PLAN DETAIL
SCALE: 3/4" = 1' - 0"

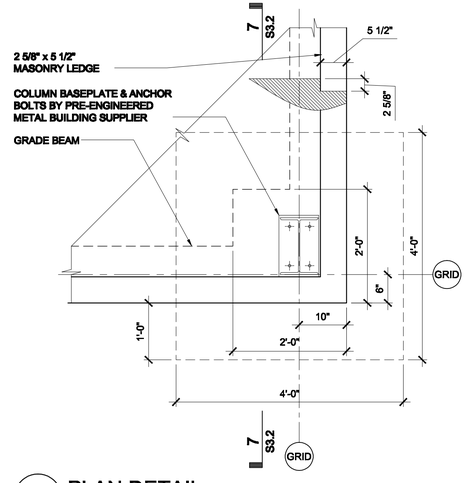

1 PLAN DETAIL
SCALE: 3/4" = 1' - 0"

FOUNDATION DETAILS

NOTE: THIS DRAWING WAS CREATED FOR PRODUCTION ON 22" x 34" SHEET SIZE. DO NOT SCALE PRINTS.

Texas Department of Transportation
125 E. 11th Street
Austin, Texas 78701-2483
(512) 416-2000

Copyright © 2005 Texas Department of Transportation

THIS DOCUMENT IS RELEASED FOR THE PURPOSE OF INFORMATION ONLY NOT FOR REGULATORY APPROVAL, PERMITTING, OR CONSTRUCTION.

WACO AREA ENGINEER AND MAINTANENCE FACILITY
WACO, MCLENNAN COUNTY
WACO DISTRICT

Revisions

Drawn by: S. F.
Project No. CBC4704-00572
Date 05.21.2007
Sheet No.

S3.1
of sheets

CADFILE: T:\MAINTFAM\D02FTWCBC\4704-00-00572\02-77-4704D00572\Acad\prototypical pdfs\waco\Acad\Structural\waco572_S3_1.dwg Plotted: Fri, Aug. 07, 2009 @ 1:01 PM By: MBAZAN

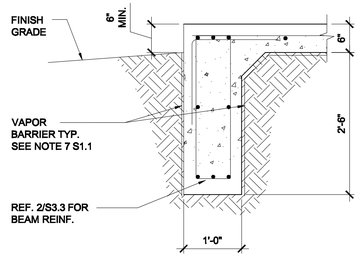

10 SECTION DETAIL
SCALE: 3/4" = 1' - 0"

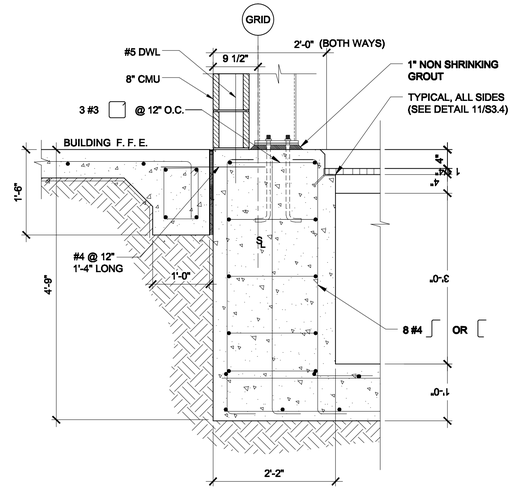

9 SECTION DETAIL
SCALE: 3/4" = 1' - 0"

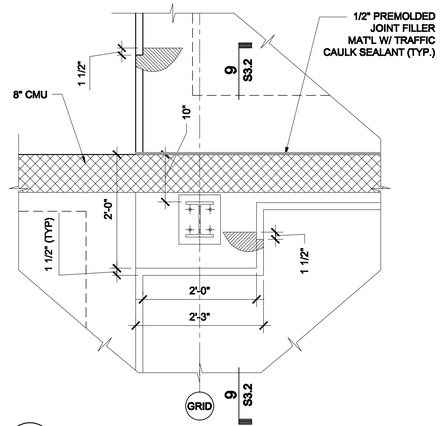

6 PLAN DETAIL
SCALE: 3/4" = 1' - 0"

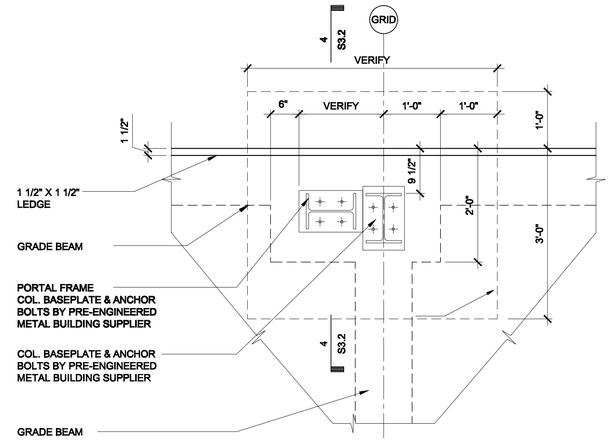

3 PLAN DETAIL
SCALE: 3/4" = 1' - 0"

11 SECTION DETAIL
SCALE: 3/4" = 1' - 0"

8 SECTION DETAIL
SCALE: 3/4" = 1' - 0"

5 SECTION DETAIL
SCALE: 3/4" = 1' - 0"

2 PLAN DETAIL
SCALE: 3/4" = 1' - 0"

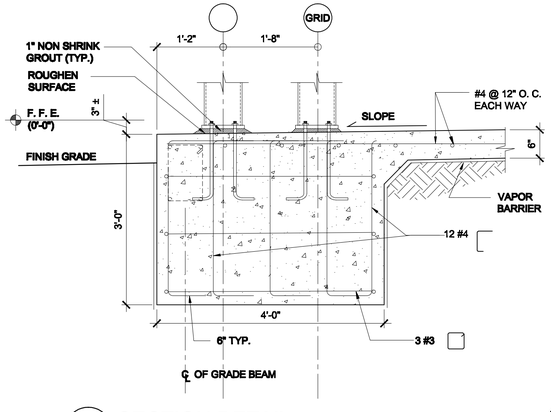

12 SECTION DETAIL
SCALE: 3/4" = 1' - 0"

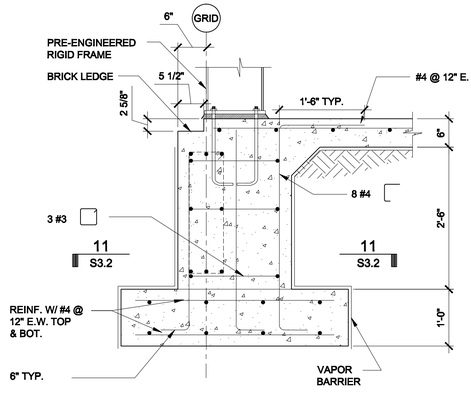

7 SECTION DETAIL
SCALE: 3/4" = 1' - 0"

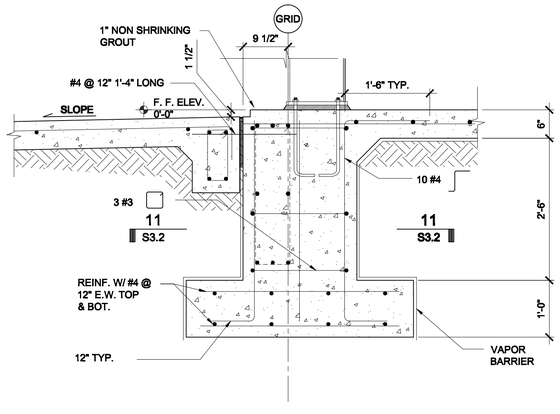

4 SECTION DETAIL
SCALE: 3/4" = 1' - 0"

1 PLAN DETAIL
SCALE: 3/4" = 1' - 0" TYPICAL AT CORNER

FOUNDATION DETAILS

NOTE: THIS DRAWING WAS CREATED FOR PRODUCTION ON 22" x 34" SHEET SIZE. DO NOT SCALE PRINTS.

Texas Department of Transportation
125 E. 11th Street
Austin, Texas 78701-2483
(512) 416-3000

Copyright © 2005 Texas Department of Transportation

THIS DOCUMENT IS RELEASED FOR THE PURPOSE OF
INFORMATION ONLY
NOT FOR REGULATORY
APPROVAL, PERMITTING,
OR CONSTRUCTION.

WACO AREA ENGINEER
AND MAINTENANCE FACILITY
WACO, MCLENNAN COUNTY
WACO DISTRICT

Revisions

Drawn by:
S. F.
Project No.
CBC4704-00672
Date
05.21.2007
Sheet No.

S3.2
of sheets

CADFILE: T:\MNTFA\D02\FTW\CBC4704-00-637\02-77-4704006371\Used\prototype\Used pdf\Waco\Used\Struct\672_S3_1.dwg Plotted: Fri, Aug. 07, 2009 @ 1:50 PM By: MBAZAN

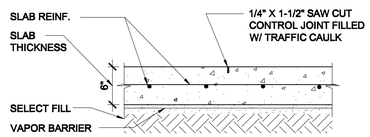

13 SECTION @ CONTROL JOINT
SCALE: 1" = 1' - 0"

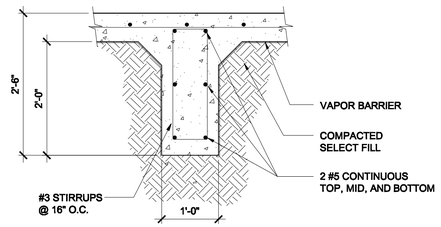

9 SECTION @ GRADE BEAM
SCALE: 1" = 1' - 0"

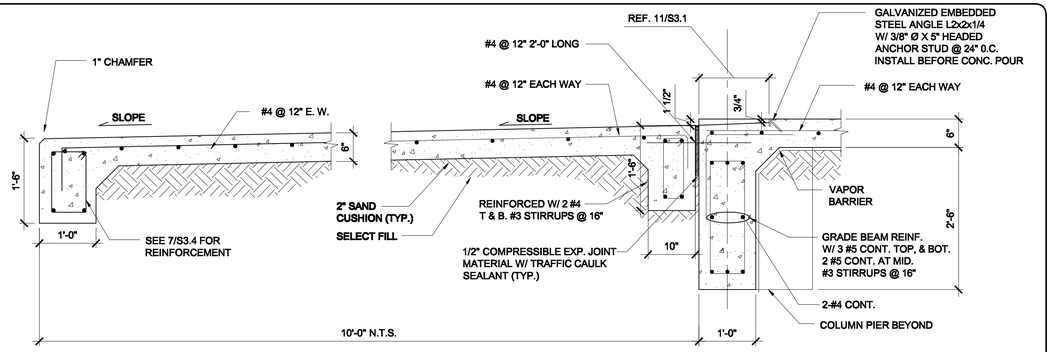

6 SECTION @ CONCRETE APRON
SCALE: 3/4" = 1' - 0"

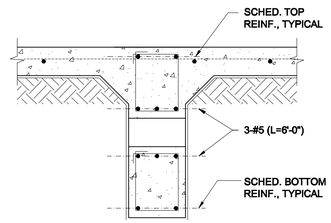

12 SECTION @ GRADE BEAM
SCALE: 3/4" = 1' - 0"

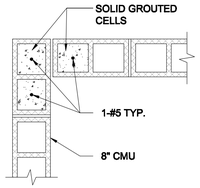

8 TYP. DETAIL @ WALL CORNER
SCALE: 3/4" = 1' - 0"

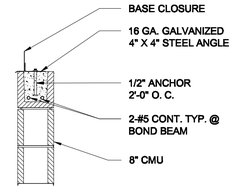

13 TYP. DETAIL @ TOP OF WALL
SCALE: 3/4" = 1' - 0"

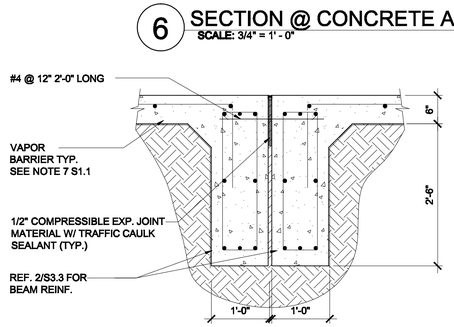

5 SECTION @ GRADE BEAM
SCALE: 3/4" = 1' - 0"

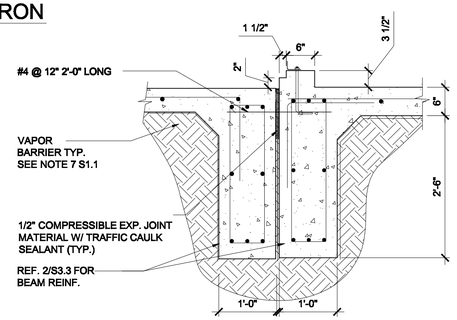

4 SECTION @ GRADE BEAM
SCALE: 3/4" = 1' - 0"

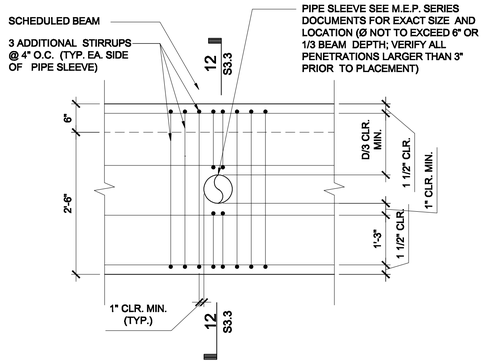

11 SECTION @ GRADE BEAM
SCALE: 3/4" = 1' - 0"

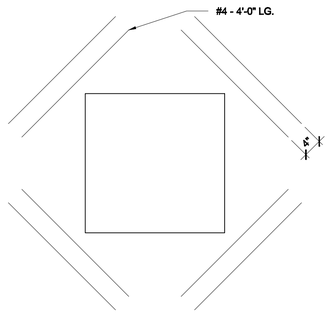

7 BONDBEAM CORNER DETAIL
SCALE: 3/4" = 1' - 0"

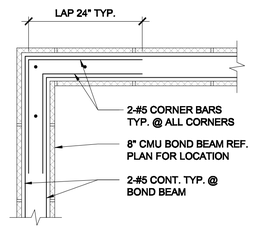

14 CORNER BARS AT ALL
SCALE: 3/4" = 1' - 0" REENTRANT CORNERS

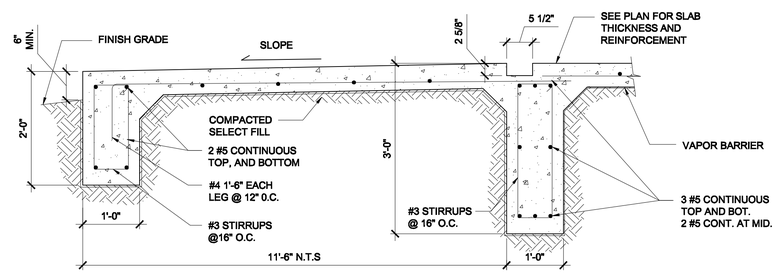

3 SECTION @ GRADE BEAM & PORCH
SCALE: 3/4" = 1' - 0"

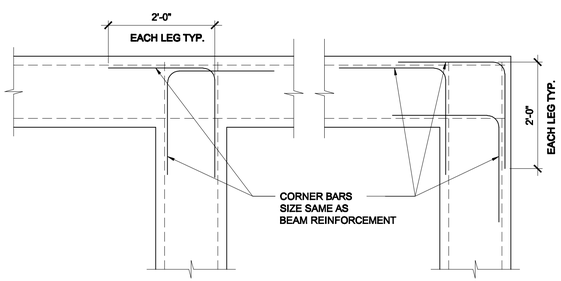

CORNER AND INTERSECTION REINFORCING APPLIES TO TOP AND BOTTOM AND INTERMEDIATE BARS

10 SECTION @ GRADE BEAM
SCALE: 3/4" = 1' - 0"

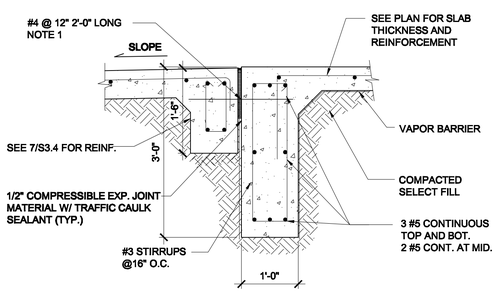

NOTES: 1. PROVIDE #5 DOWELS AT 12" O. C. AGAINST BUIDING FOUNDATION FOR SIDEWALKS LOCATED AGAINST BUILDING

15 SECTION @ GRADE BEAM
SCALE: 3/4" = 1' - 0" TYPICAL @ DOOR

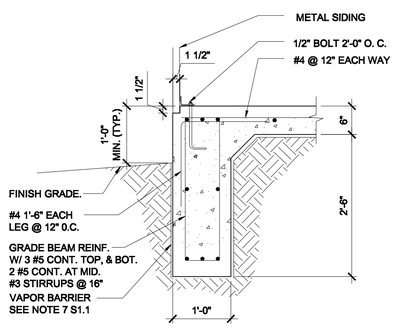

2 SECTION @ GRADE BEAM
SCALE: 3/4" = 1' - 0"

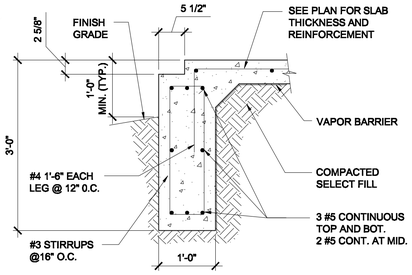

1 SECTION @ GRADE BEAM
SCALE: 3/4" = 1' - 0"

FOUNDATION DETAILS

NOTE: THIS DRAWING WAS CREATED FOR PRODUCTION ON 22" x 34" SHEET SIZE. DO NOT SCALE PRINTS.

Texas Department of Transportation
125 E. 11th Street
Austin, Texas 78701-2483
(512) 416-3000

Copyright © 2005 Texas Department of Transportation

THIS DOCUMENT IS RELEASED FOR THE PURPOSE OF
INFORMATION ONLY
NOT FOR REGULATORY
APPROVAL, PERMITTING,
OR CONSTRUCTION.

WACO AREA ENGINEER AND MAINTENANCE FACILITY
WACO, MCLENNAN COUNTY
WACO DISTRICT

Revisions

Drawn by: S. F.
Project No. CBC4704-00672
Date 05.21.2007
Sheet No.

S3.3
of sheets

CADFILE: T:\ANTRA\DGN\CBC4704-00-S3\02-77-4704S3S1.dgn

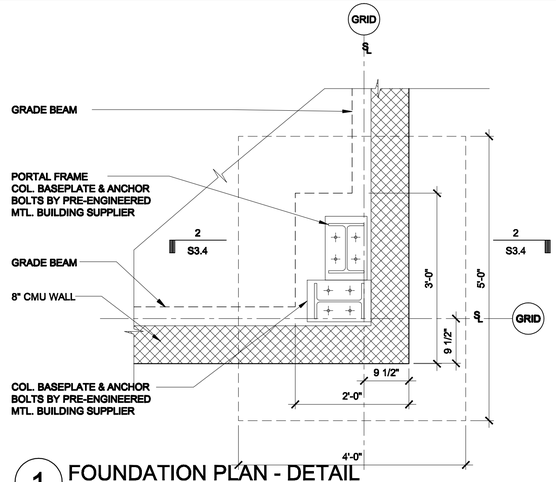

1 FOUNDATION PLAN - DETAIL
SCALE: 3/4" = 1' - 0"

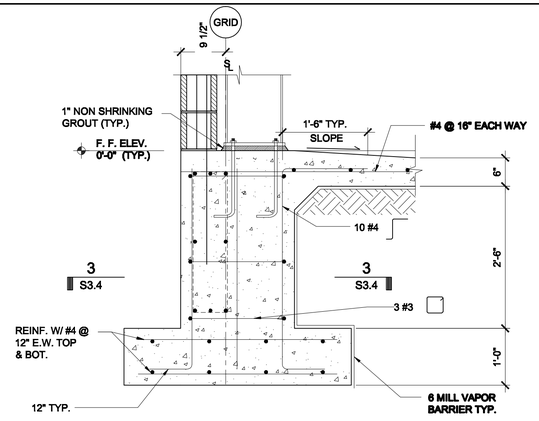

2 SECTION DETAIL
SCALE: 3/4" = 1' - 0"

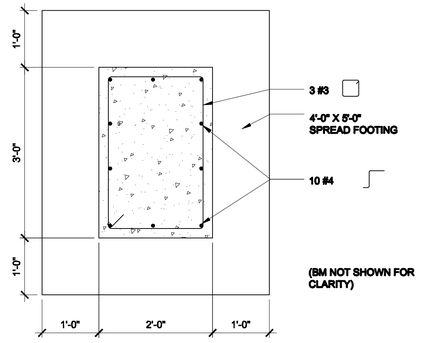

3 SECTION DETAIL
SCALE: 3/4" = 1' - 0"

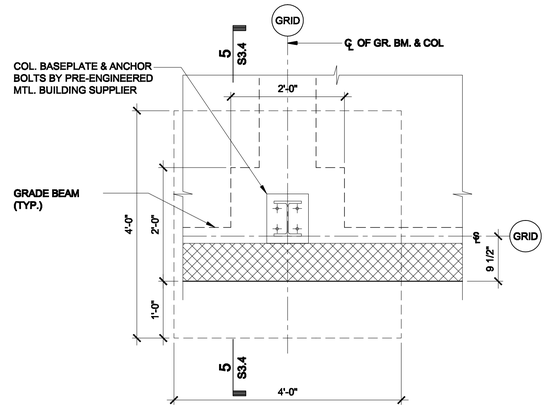

4 FOUNDATION PLAN - DETAIL
SCALE: 3/4" = 1' - 0"

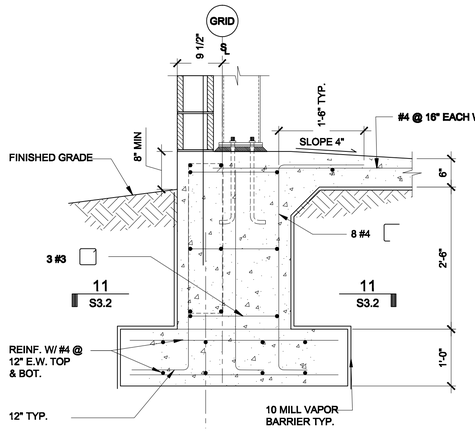

5 SECTION DETAIL
SCALE: 3/4" = 1' - 0"

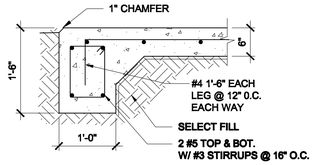

7 SECTION DETAIL
SCALE: 3/4" = 1' - 0"

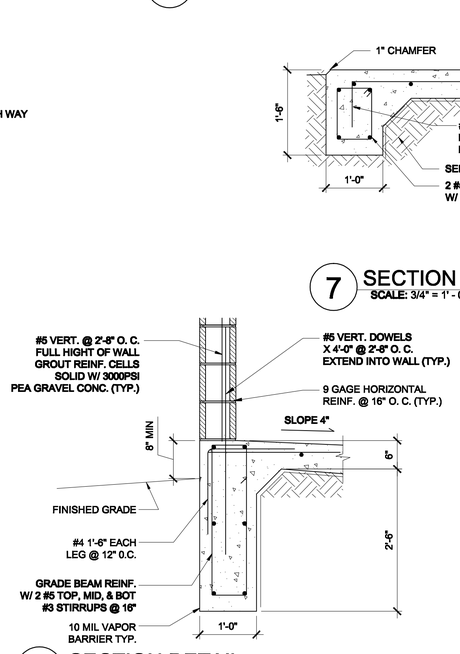

6 SECTION DETAIL
SCALE: 3/4" = 1' - 0"

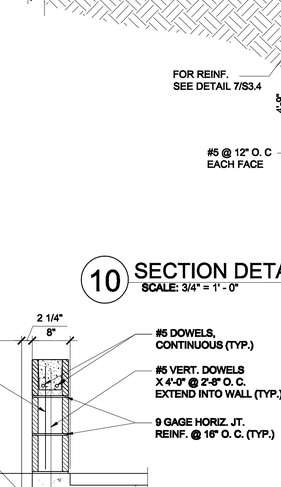

10 SECTION DETAIL
SCALE: 3/4" = 1' - 0"

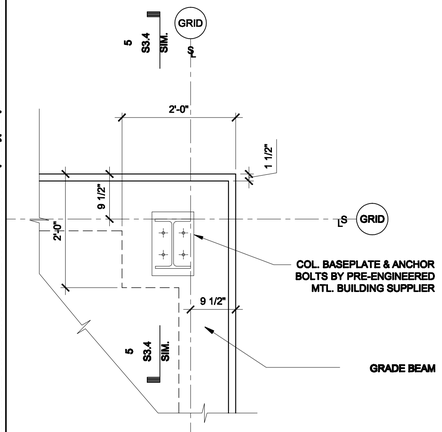

9 PLAN DETAIL
SCALE: 3/4" = 1' - 0"

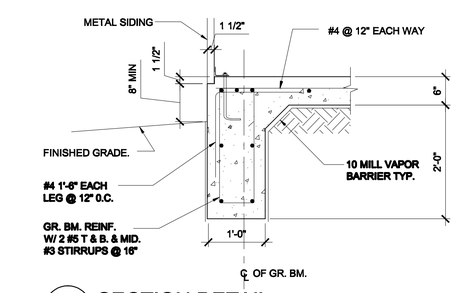

8 SECTION DETAIL
SCALE: 3/4" = 1' - 0"

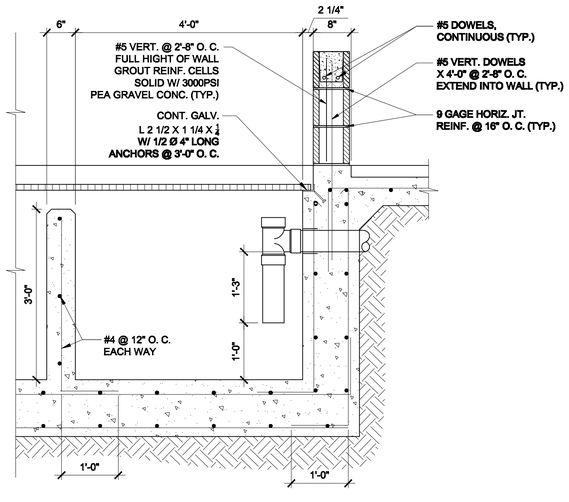

11 SECTION DETAIL
SCALE: 3/4" = 1' - 0"

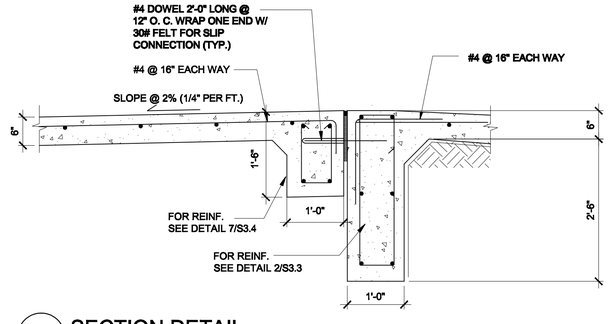

12 SECTION DETAIL
SCALE: 3/4" = 1' - 0"

FOUNDATION DETAILS

NOTE: THIS DRAWING WAS CREATED FOR PRODUCTION ON 22" x 34" SHEET SIZE. DO NOT SCALE PRINTS.

CADFILE: T:\NHTF\WDOF\WCBC4704-00-857\02-77-4704008377\acad\pvrotx\pytical pdf\sheets\Acad\Structs\872_S3_1.dwg Plotted: Fri, Aug. 07, 2009 @ 1:49 PM By: MBAZAN

Texas Department of Transportation
125 E. 11th Street
Austin, Texas 78701-2483
(512) 416-2000
Copyright © 2005 Texas Department of Transportation

THIS DOCUMENT IS RELEASED FOR THE PURPOSE OF
INFORMATION ONLY
NOT FOR REGULATORY
APPROVAL, PERMITTING,
OR CONSTRUCTION.

WACO AREA ENGINEER
AND MAINTENANCE FACILITY
WACO, MCLENNAN COUNTY
WACO DISTRICT

Revisions

Drawn by:
S. F.
Project No.
CBC4704-00672
Date
05.21.2007
Sheet No.

S3.4
of sheets

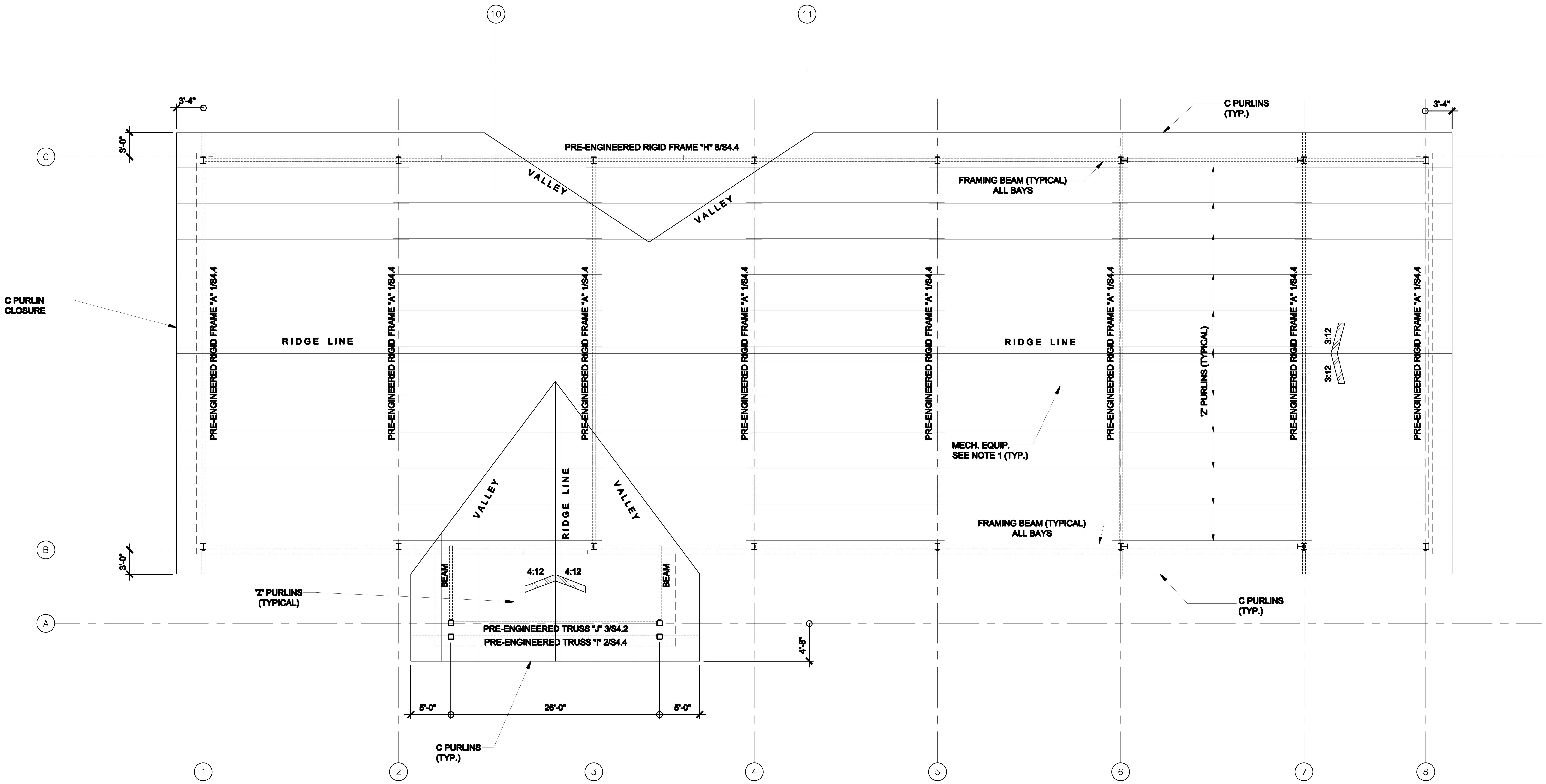

NORTH

1 FRAMING PLAN - OFFICE
SCALE: 1/8" = 1' - 0"

NOTE 1. WEIGHT OF MAJOR EQUIPMENT SHALL BE CONSIDERED IN THE DESIGN OF PURLINS. REFER AND COORDINATE WITH MECHANICAL DRAWINGS FOR LOCATION AND ACTUAL WEIGHT OF EQUIPMENT. MAX. DEFLECTION AT EQUIPMENT ≤ 3/16"

Texas Department of Transportation

THIS DOCUMENT IS RELEASED FOR THE PURPOSE OF INFORMATION ONLY
NOT FOR REGULATORY APPROVAL, PERMITTING, OR CONSTRUCTION.

WACO AREA ENGINEER AND MAINTENANCE FACILITY
WACO, MCLENNAN COUNTY
WACO DISTRICT

Revisions

Drawn by: S. F.
Project No. CBC4704-00672
Date 05.21.2007
Sheet No. S4.1
of sheets

FRAMING PLAN - OFFICE

NOTE: THIS DRAWING WAS CREATED FOR PRODUCTION ON 22" x 34" SHEET SIZE. DO NOT SCALE PRINTS.

NOTES:
1. PROVIDE FRAME WITH REQUIRED CONNECTIONS FOR FUTURE ADDITION.
2. COLUMN BETWEEN GRID LINE 9,10 AND 11 SHALL NOT BE PART OF RIGID FRAME.

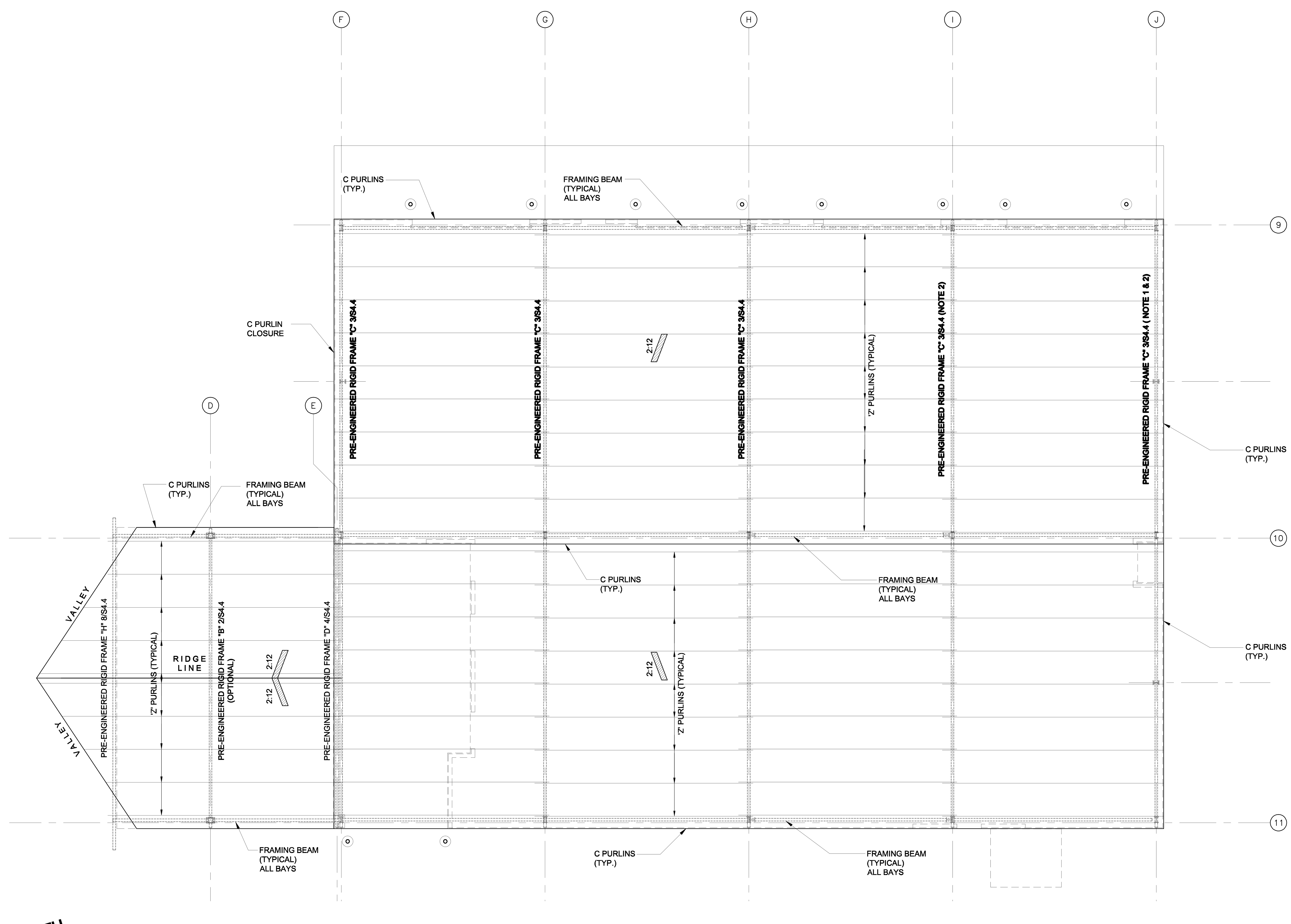

1 FRAMING PLAN - LAB / SHOP
SCALE: 1/8" = 1' - 0"

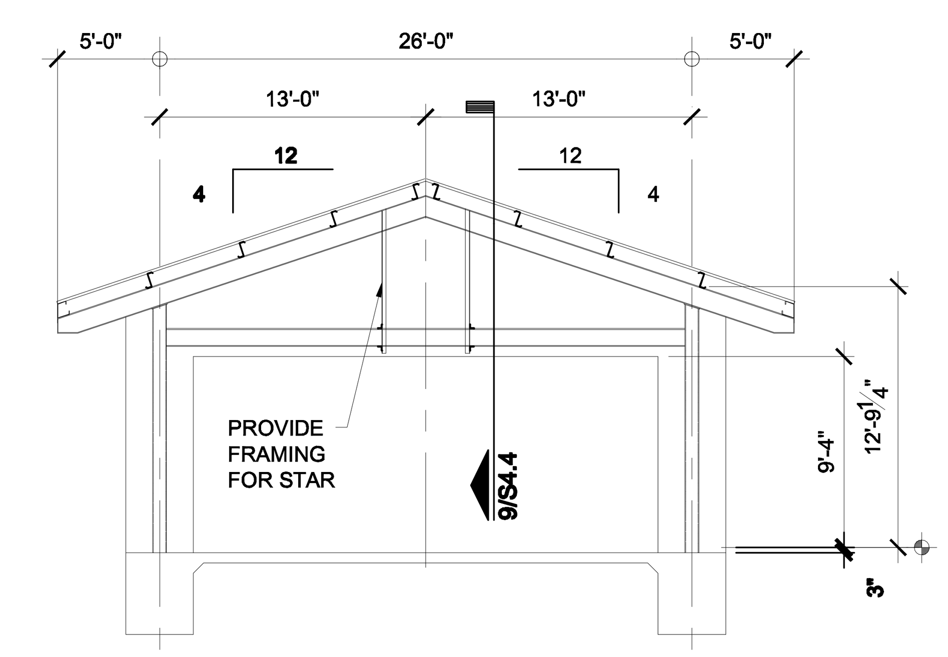

2 PRE-ENGINEERED RIGID FRAME "I"
SCALE: 1/8" = 1' - 0"

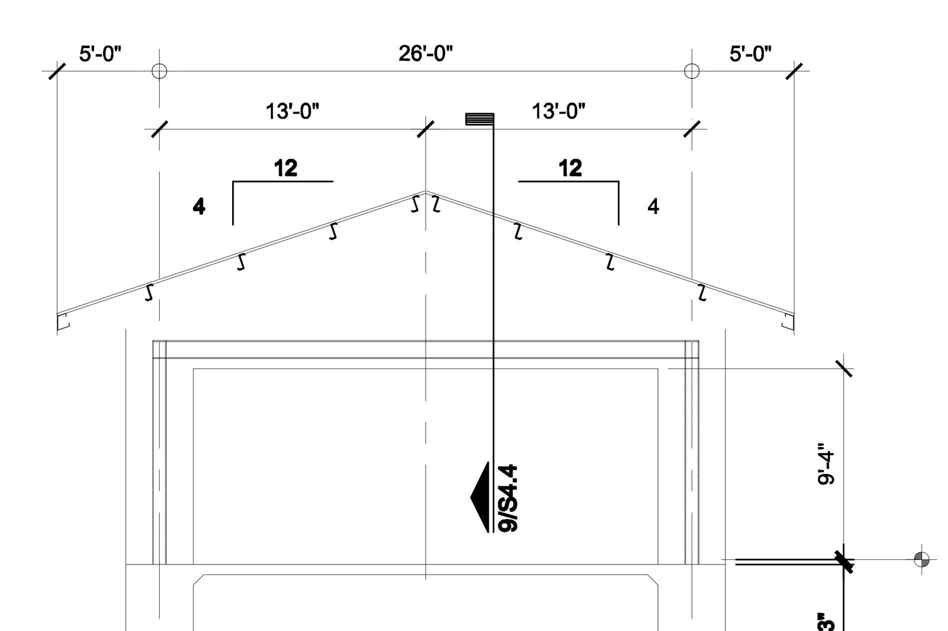

3 PRE-ENGINEERED RIGID FRAME "J"
SCALE: 1/8" = 1' - 0"

Texas Department of Transportation

THIS DOCUMENT IS RELEASED FOR THE PURPOSE OF INFORMATION ONLY
NOT FOR REGULATORY APPROVAL, PERMITTING, OR CONSTRUCTION.

WACO AREA ENGINEER AND MAINTENANCE FACILITY
WACO, MCLENNAN COUNTY
WACO DISTRICT

Revisions

Drawn by: S. F.
Project No. CBC4704-00672
Date 05.21.2007
Sheet No. S4.2
of sheets

FRAMING PLAN - LAB / SHOP

NOTE: THIS DRAWING WAS CREATED FOR PRODUCTION ON 22" x 34" SHEET SIZE. DO NOT SCALE PRINTS.

NOTES:
1. PROVIDE FRAME WITH REQUIRED CONNECTIONS FOR FUTURE ADDITION.
2. COLUMN AT GRID LINE M SHALL NOT BE PART OF RIGID FRAME.

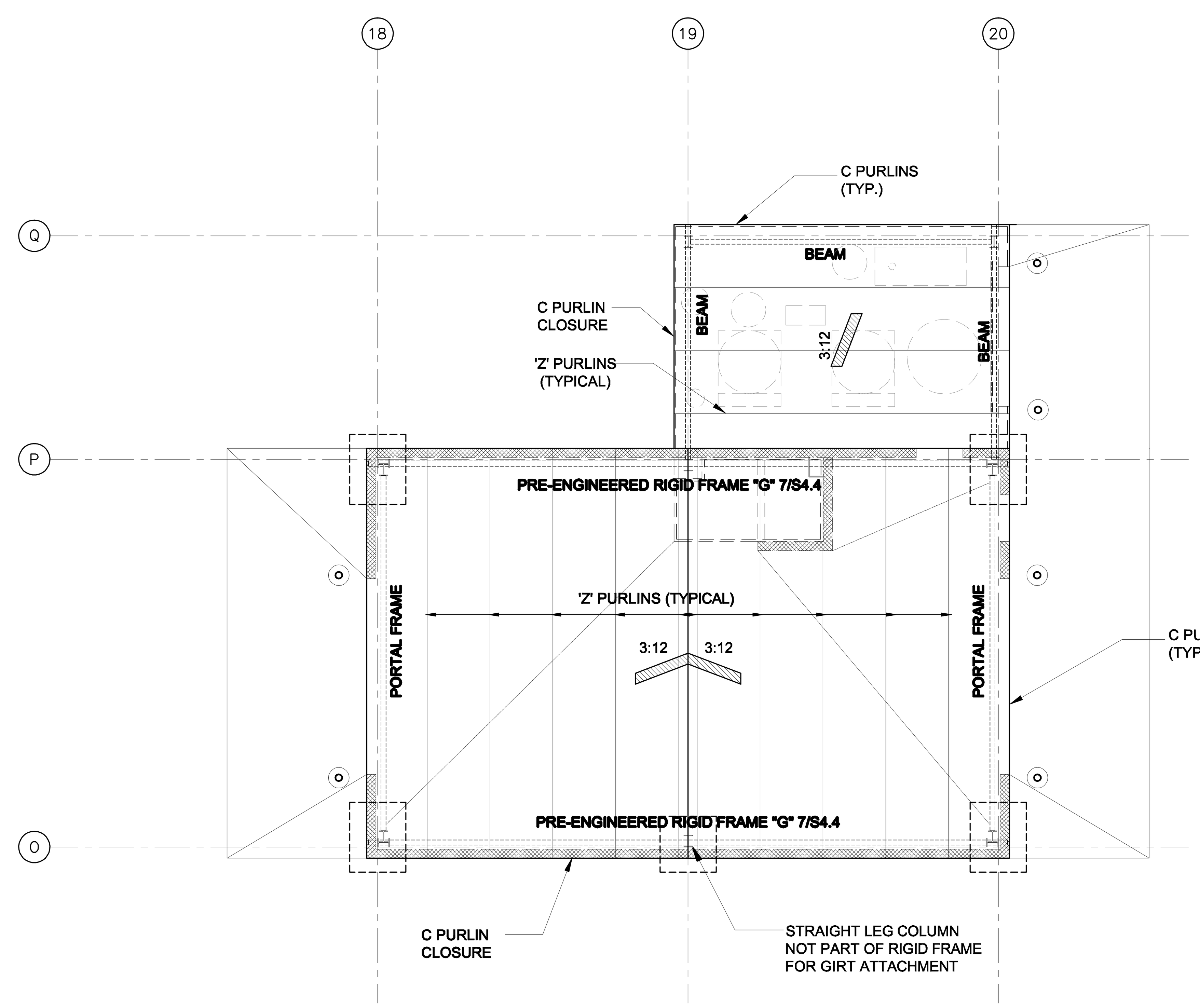

NOTE: PROVIDE OVERHEAD DOOR FRAME AT EACH OPENING FOR FUTURE OVERHEAD DOOR. ARANGE PORTAL FRAME ACCORDINGLY.

2 FRAMING PLAN - WASH BAY
SCALE: 1/8" = 1' - 0"

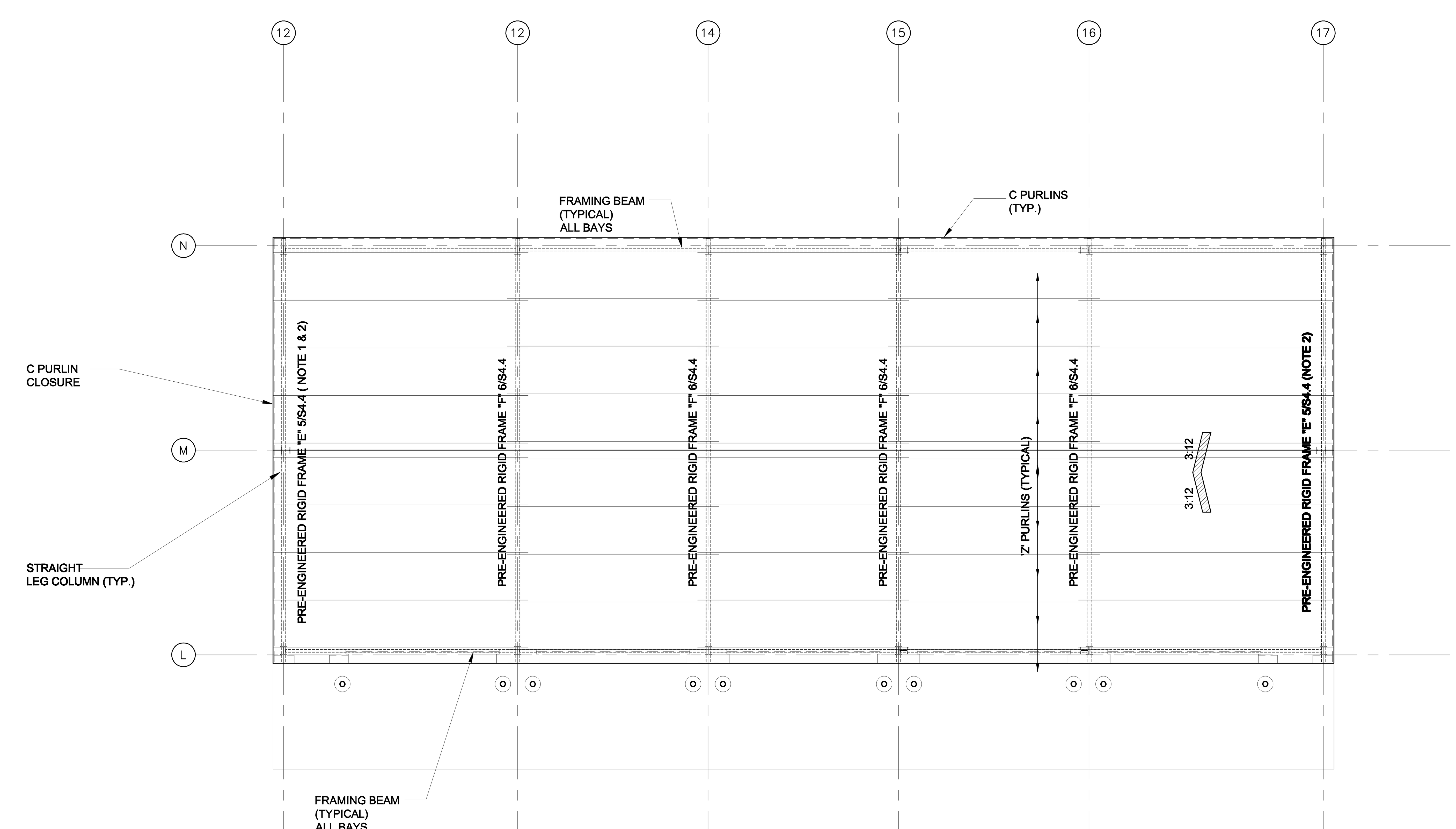

NORTH

1 FRAMING PLAN - VEHICLE STORAGE
SCALE: 1/8" = 1' - 0"

Texas Department of Transportation
125 E. 11th Street
Austin, Texas 78701-2483
(512) 416-3046
Copyright © 2005 Texas Department of Transportation

THIS DOCUMENT IS RELEASED FOR THE PURPOSE OF INFORMATION ONLY
NOT FOR REGULATORY APPROVAL, PERMITTING, OR CONSTRUCTION.

WACO AREA ENGINEER AND MAINTENANCE FACILITY
WACO, MCLENNAN COUNTY WACO DISTRICT

Revisions

Drawn by: S. F.
Project No. CBC4704-00672
Date 05.21.2007
Sheet No. S4.3 of sheets

FRAMING PLAN - VEHICLE STORAGE

NOTE: THIS DRAWING WAS CREATED FOR PRODUCTION ON 22" x 34" SHEET SIZE. DO NOT SCALE PRINTS.

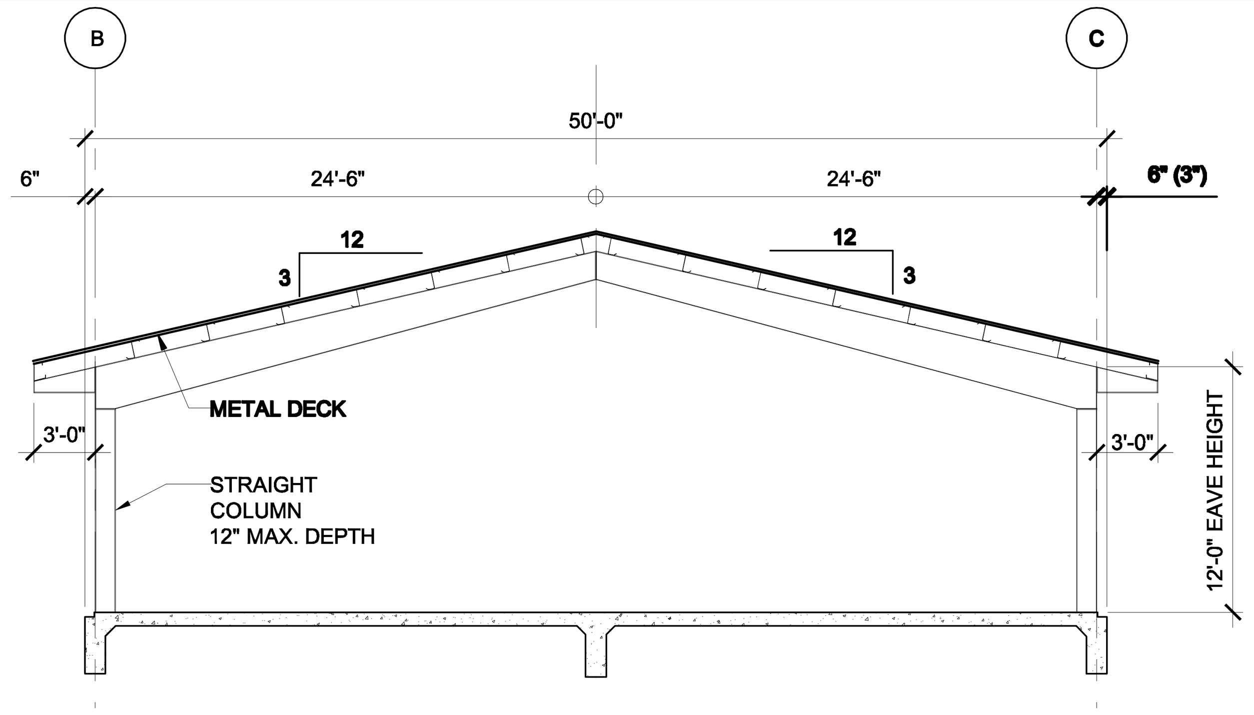

1 PRE-ENGINEERED RIGID FRAME "A"
SCALE: 1/8" = 1' - 0" STRAIGHT COLUMNS

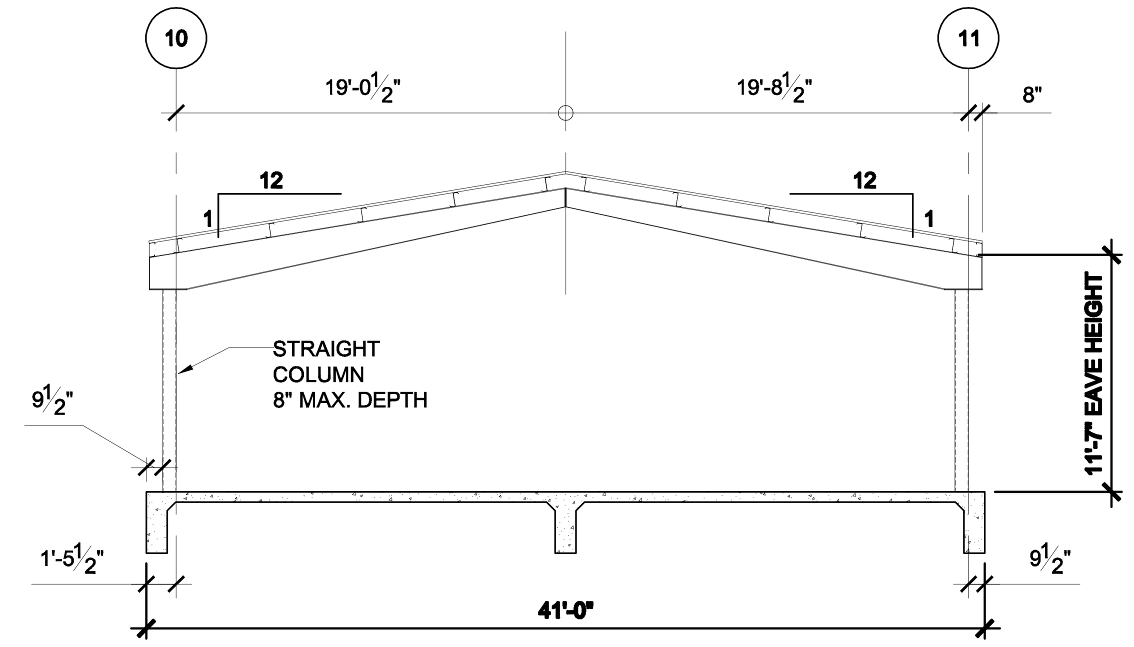

NOTE: FRAME AT COLUMN LINE D IS OPTIONAL. M. B. M. SHALL TAKE INTO ACCOUNT THE WEIGHTS OF THE MECHANICAL EQUIPMENT FOR THE DESIGN OF PURLINS TO SPAN THE LENGTH OF THE BREEZWAY.

2 PRE-ENGINEERED RIGID FRAME "B"
SCALE: 1/8" = 1' - 0" HALLOW STRUCTURAL COLUMNS

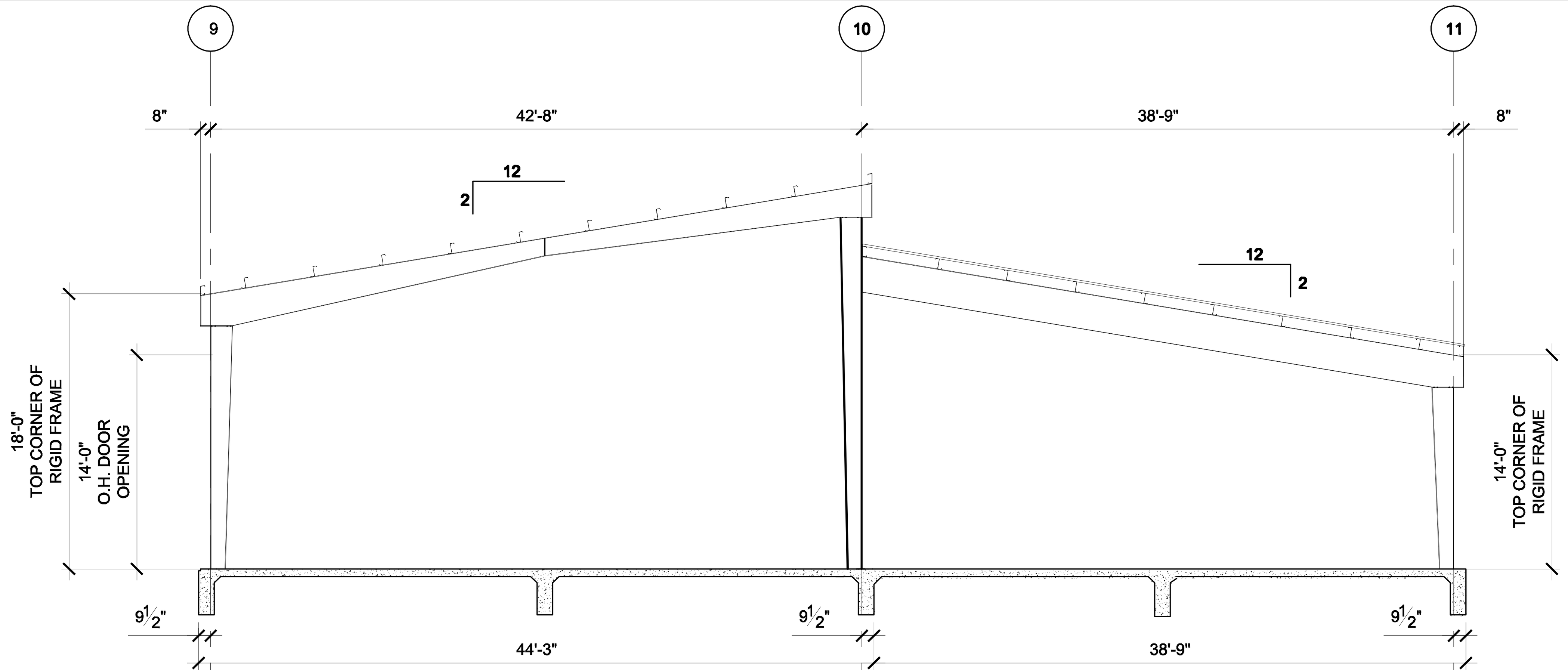

3 PRE-ENGINEERED RIGID FRAME "C"
SCALE: 1/8" = 1' - 0"

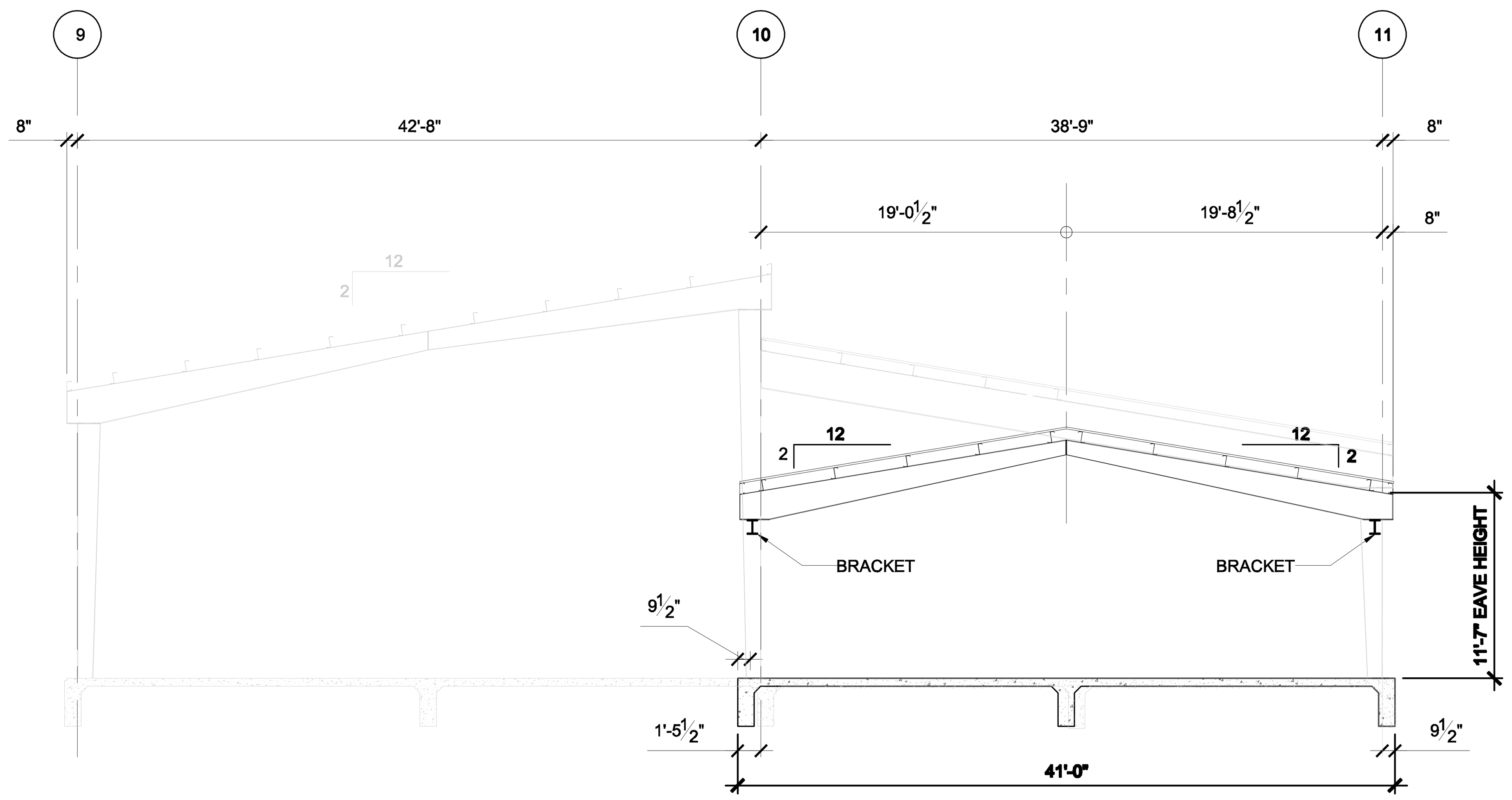

4 PRE-ENGINEERED RIGID FRAME "D"
SCALE: 1/8" = 1' - 0"

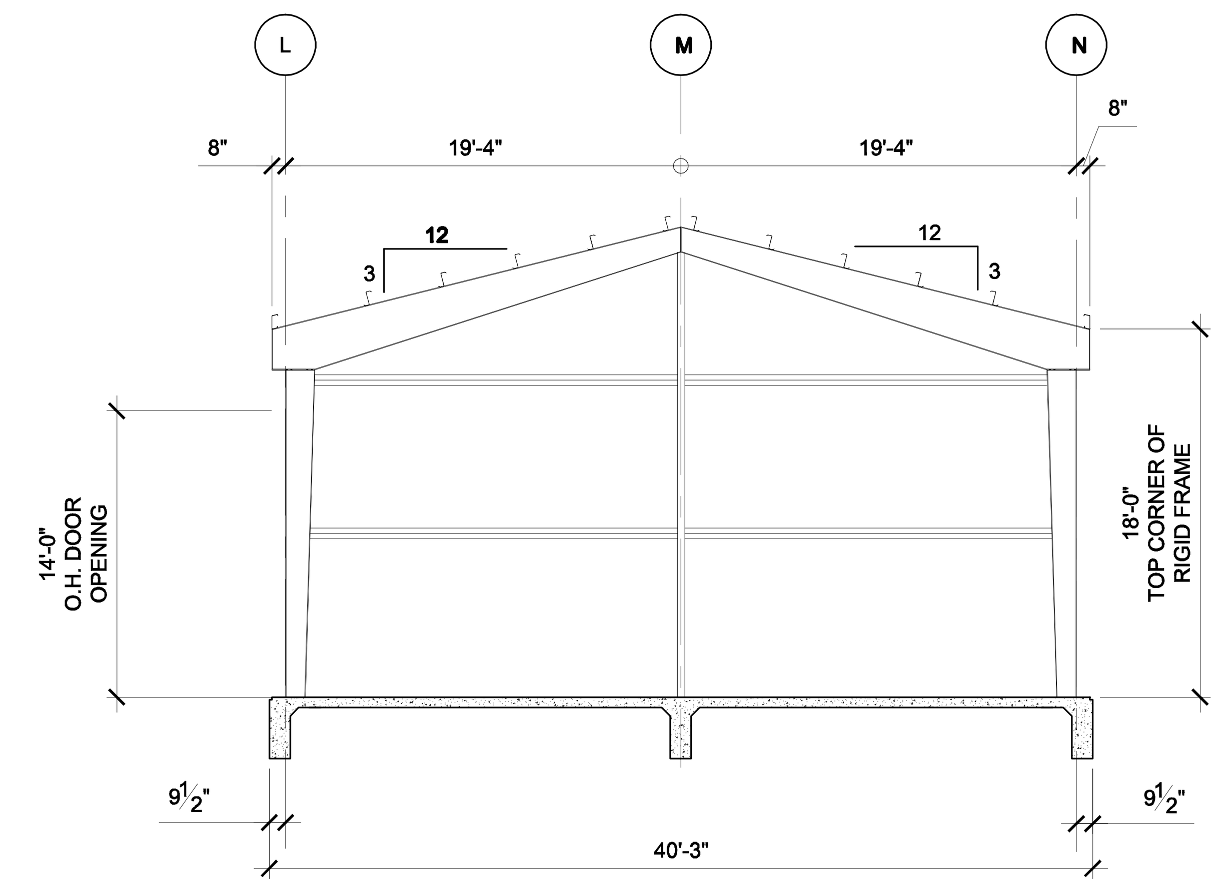

5 PRE-ENGINEERED RIGID FRAME "E"
SCALE: 1/8" = 1' - 0" RIGID FRAME FOR FUTURE ADDITION

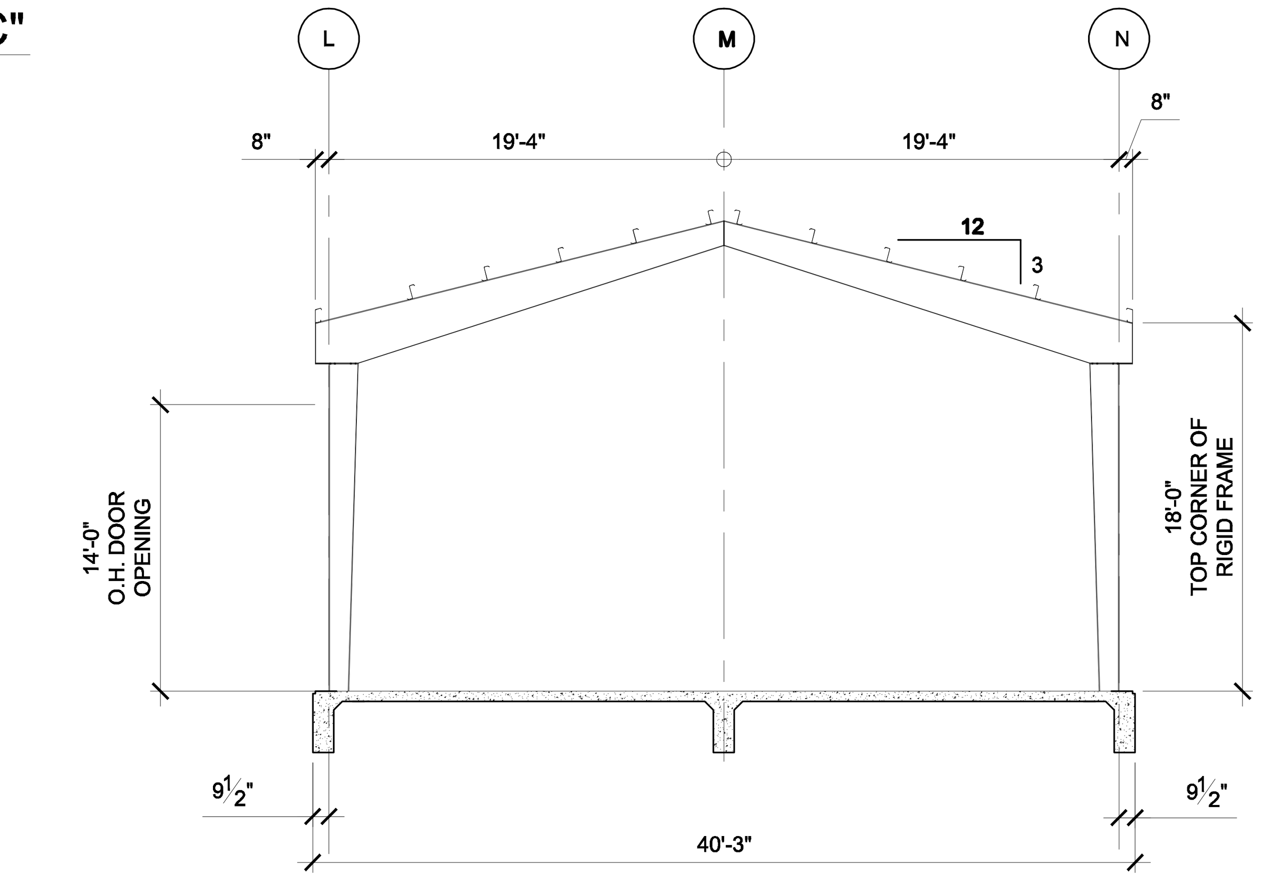

6 PRE-ENGINEERED RIGID FRAME "F"
SCALE: 1/8" = 1' - 0"

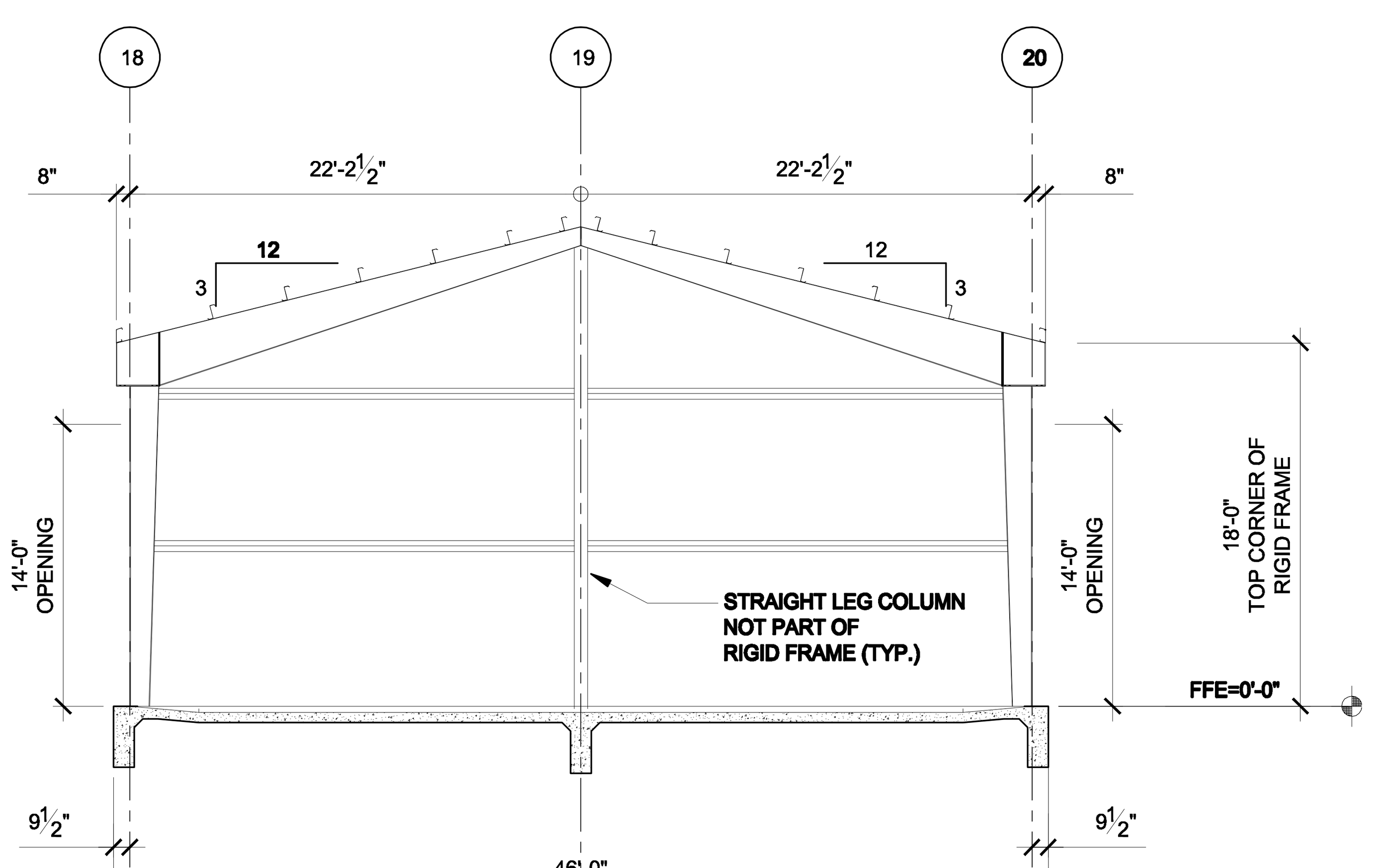

7 PRE-ENGINEERED RIGID FRAME "G"
SCALE: 1/8" = 1' - 0"

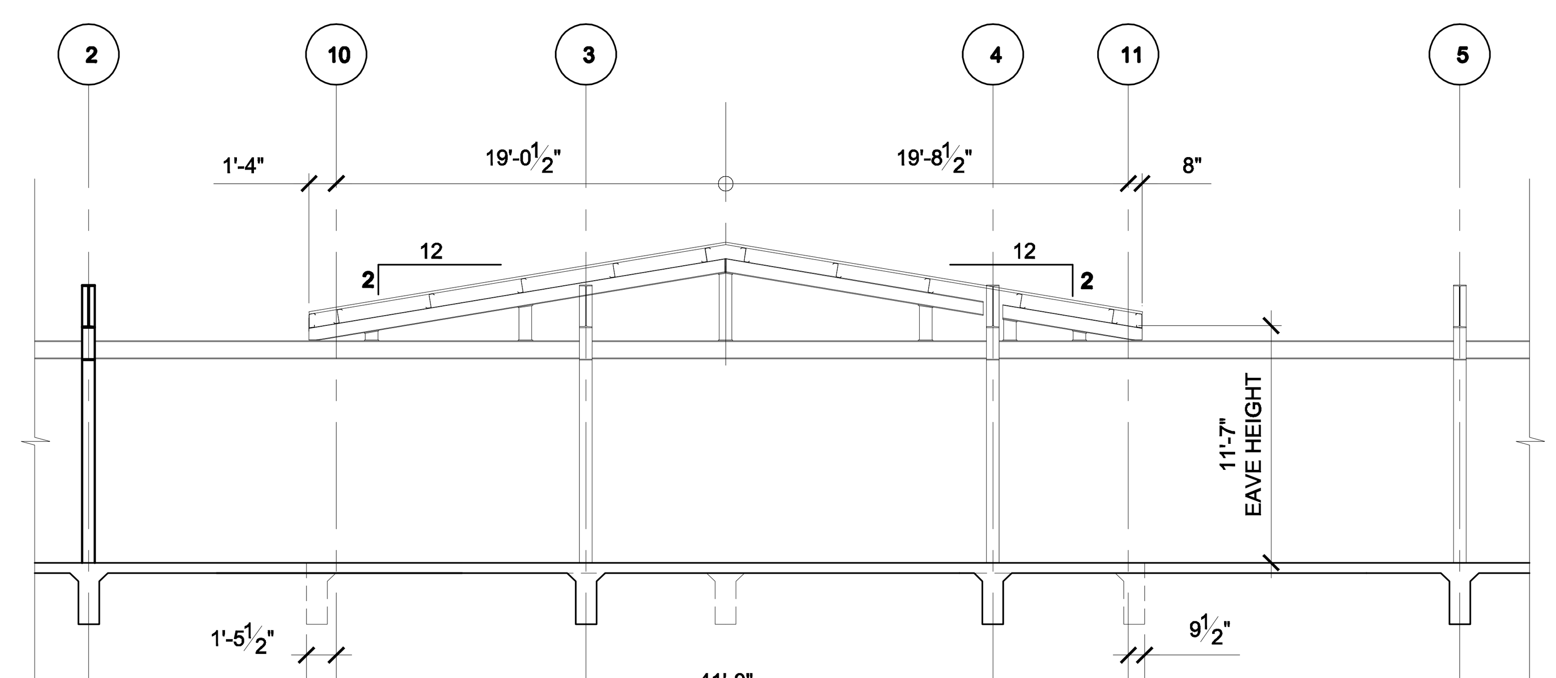

8 PRE-ENGINEERED RIGID FRAME "H"
SCALE: 1/8" = 1' - 0"

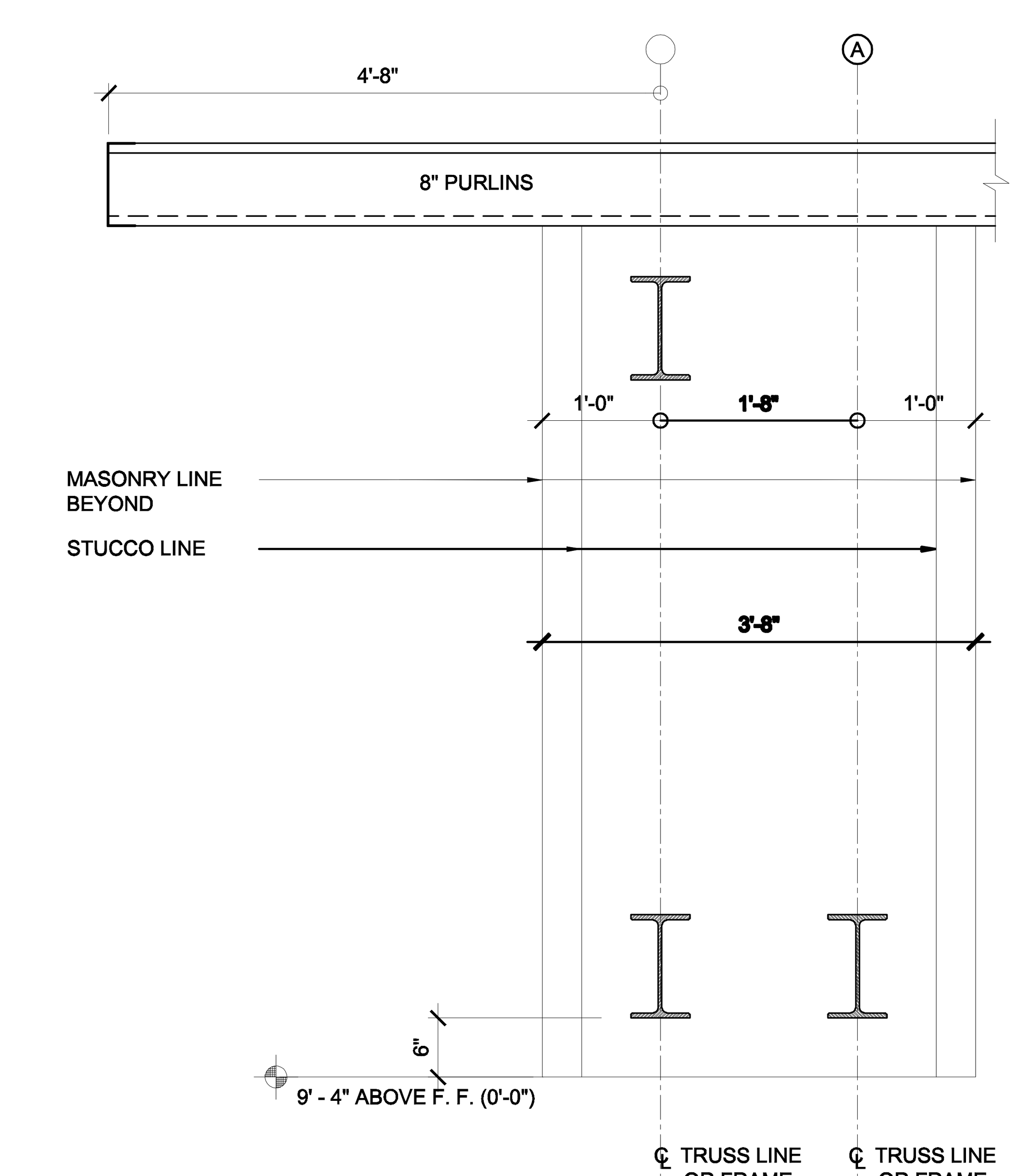

9 FRAME SECTION
SCALE: 3/4" = 1' - 0"

FRAMING SECTION

Texas Department of Transportation
125 E. 11th Street
Austin, Texas 78701-2483
(512) 416-2055
Copyright © 2005 Texas Department of Transportation

THIS DOCUMENT IS RELEASED FOR THE PURPOSE OF
INFORMATION ONLY
NOT FOR REGULATORY
APPROVAL, PERMITTING,
OR CONSTRUCTION.

WACO AREA ENGINEER AND MAINTENANCE FACILITY
WACO, MCLENNAN COUNTY WACO DISTRICT

Revisions

Drawn by:
S. F.
Project No.
CBC4704-00672
Date
05.21.2007
Sheet No.
S4.4
of sheets

NOTE: THIS DRAWING WAS CREATED FOR PRODUCTION ON 22" x 34" SHEET SIZE. DO NOT SCALE PRINTS.

CADFILE: T:\MNTFMD02FTW\CBC4704-00-537\02-77-47040037\Acad\prototypical pdfs\waco\Acad\Struct\672_S4_2.dwg Plotted: Fri, Aug. 07, 2009 @ 1:53 PM By: MBAZAN

APPLIES TO ALL M-SHEETS

GENERAL NOTES

1. NOTE THAT CONSTRUCTION DRAWINGS ARE DIAGRAMMATIC BY THEIR NATURE, AND ARE NOT INTENDED TO SHOW EVERY CONNECTION IN DETAIL OR EVERY PIPE, DUCT OR CONDUIT IN ITS EXACT LOCATION. FEATURES AND COMPONENTS NOT SHOWN ARE SUBJECT TO THE REQUIREMENTS OF STANDARDS REFERENCED ELSEWHERE IN THE CONSTRUCTION DOCUMENTS. THE CONTRACTOR SHALL COORDINATE THE VARIOUS TRADES IN ORDER TO AVOID INTERFERENCE BETWEEN THE VARIOUS SEGMENTS OF THE PROJECT.
2. ALL WORK SHALL BE INSTALLED PARALLEL OR PERPENDICULAR TO THE BUILDING LINES.
3. REFER TO SPECIFICATIONS FOR ADDITIONAL INFORMATION. THE SPECIFICATIONS REPRESENT AN ESSENTIAL PART OF THE CONSTRUCTION DOCUMENTS.
4. DIFFUSERS SHALL BE CENTERED IN THE ROOM OR AREA INDICATED. DIFFUSERS SHALL ALSO BE SPACED EVENLY AS SHOWN IN THE PLAN. COORDINATE WITH THE REFLECTED CEILING PLAN FOR EXACT LOCATIONS.
5. ALL DUCTWORK DIMENSIONS INDICATED IN PLANS ARE CLEAR UNOBSTRUCTED FREE AREA DIMENSIONS.
6. SINGLE WALL RECTANGULAR DUCTWORK SHALL BE FABRICATED FROM SHEETMETAL, INSTALLED AND TESTED AS RECOMMENDED BY SMACNA AS A MINIMUM STANDARD. NOTE THAT THE SPECIFICATIONS MAY STIPULATE STRICTER CONSTRUCTION REQUIREMENTS WHICH SHALL BE COMPLIED TO.
7. INSULATE ALL DUCTWORK INCLUDING SUPPLY AIR, RETURN AIR, OUTSIDE AIR, WITH EXTERNAL 2" BLANKET TYPE INSULATION. INSULATION SHALL HAVE A FOIL, REINFORCED KRAFT PAPER (FRK) VAPOR BARRIER FACING, AS SPECIFIED.
8. DUCT WORK TRANSITIONS SHALL HAVE MAXIMUM 15° CONVERGENCE, UNLESS NOTED OTHERWISE.
9. CHANGES IN DIRECTION IN ROUND DUCT WORK SHALL BE MADE USING 4–SECTION ADJUSTABLE "90's" OR 3–SECTION ADJUSTABLE "45's".
10. ALL 90° TURNS IN RECTANGULAR DUCT SHALL BE INSTALLED WITH TURNING VANES.
11. SUPPORT ALL DUCTWORK WITH UNISTRUT AND HANGERS AS SPECIFIED, AND PER MANUFACTURERS RECOMMENDATIONS.
12. ALL DROPS TO SUPPLY DIFFUSERS, RETURN DUCTS, EXHAUST GRILLES, AND ALL OUTSIDE AIR SUPPLIES, SHALL HAVE VOLUME BALANCING DAMPERS INSTALLED AT MAIN DUCT TAP.
13. ALL TAP CONNECTIONS IN RECTANGULAR DUCT FOR ROUND SHEETMETAL OR FLEXIBLE DUCT SHALL BE INSTALLED USING CONICAL BELLMOUTH WITH 1" FLANGE AND GASKET SPIN–IN CONNECTOR WITH DAMPER INCLUDING 2" BUILD OUT, NYLON BUSHINGS, LOCKING QUADRANT AND HANDLE.
14. DUCT SEALANT SHALL BE LATEX BASED, WATER SOLUBLE. SOLVENT BASED DUCT SEALANT IS PROHIBITED.
15. ALL AREAS: FLEXIBLE METAL DUCT IS PERMITTED AT THE DIFFUSERS, MAXIMUM LENGTH IS 4FT. ALL FLEXIBLE METAL DUCT SHALL HAVE A FLAME RETARDANT VAPOR BARRIER.
16. CONNECTIONS OF "AHU" UNITS TO DUCTWORK SHALL BE MADE WITH FLEXIBLE VIBRATION DAMPENING CONNECTIONS AS SPECIFIED.
17. USE SPRING ISOLATORS ON ALL SUSPENDED MECHANICAL EQUIPMENT. VIBRATION ISOLATION SHALL BE AS SPECIFIED.
18. ALL REFRIGERANT LINES SHALL BE INSULATED WITH 1/2" ARMAFLEX (OR APPROVED EQUAL) CLOSED CELL FOAM PIPE INSULATION. INSULATION INSTALLED WHERE EXPOSED TO SUNLIGHT SHALL BE PAINTED WITH TWO COATS OF WHITE EXTERIOR GRADE LATEX PAINT. INDIVIDUALLY INSULATE THE LIQUID AND VAPOR REFRIGERANT LINES, NEATLY BUNDLE THE REFRIGERANT LINES TOGETHER (FOR THE ENTIRE LENGTH), WITHOUT COMPRESSING INSULATION.
19. CONDENSATE LINES SHALL BE MINIMUM 3/4" TYPE "K" COPPER, INSTALLED AS SPECIFIED FOR WATER PIPING, INSULATED WITH SAME MATERIAL AS DESCRIBED FOR FREON LINES.
20. OUTSIDE AIR INTAKES SHALL BE INSTALLED AS INDICATED. MAINTAIN A DISTANCE OF AT LEAST 10 FT AWAY FROM ANY EXHAUST FAN, FLUE, COMBUSTION AIR VENT, AND/OR SANITARY SEWER VENT. LOCATE INTAKES ON OFFICE BUILDING AT LEAST 10 FT. BEHIND ROOF RIDGE CAP.
21. ROOF CONTRACTOR SHALL INSTALL ALL ROOF PENETRATIONS IN THE APPROXIMATE LOCATIONS SHOWN IN PLANS AS PER ARCHITECTURAL DRAWINGS AND SPECIFICATIONS.
22. ON PAD MOUNTED CONDENSING UNITS INSTALL 4" SQUARE NEOPRENE AND CORK VIBRATION ISOLATION PADS ON ALL FOUR CORNERS. CONDENSING UNITS SHALL BE INSTALLED ON AN EQUIPMENT PAD (SEE THE ARCHITECT PLANS). MAINTAIN 36" CLEARANCE BETWEEN EACH UNIT, MINIMUM 48" FROM THE BUILDING STRUCTURE, AND MINIMUM 6" TO EDGE OF PAD, ALL SIDES. CONDENSING UNITS LARGER THAN FIVE TONS SHALL HAVE AN ADDITIONAL ISOLATION PAD ON EACH SIDE LOCATED IN THE CENTER OF THE UNIT AND 72" CLEARANCE FROM ALL OTHER UNITS.
23. SLEEVE ALL WALL PENETRATIONS WITH SLEEVE 2 PIPE SIZES LARGER THAN PENETRATING PIPE. SLEEVE AND PENETRATING PIPE SHALL BE CONSTRUCTED FROM THE SAME MATERIAL. MAINTAIN INSULATION THROUGH SLEEVES.
24. ALL EXTERIOR, SLAB AND CONDITIONED TO NON–CONDITIONED PENETRATIONS, PACK ANNULUR SPACE WITH MINERAL WOOL. SEAL EACH EXTERIOR END AND TOP END OF SLAB PENETRATION WITH SEALANT (SEE ARCHITECTURAL SPECIFICATIONS).
25. FIRE CAULK ALL PIPE PENETRATIONS WHERE ARCHITECTURAL PLANS CALL FOR FIRE RATED CONSTRUCTION WALLS. STOP INSULATION SHORT OF SLEEVE FILL ANNULAR SPACES WITH FIRE RATED CAULK.

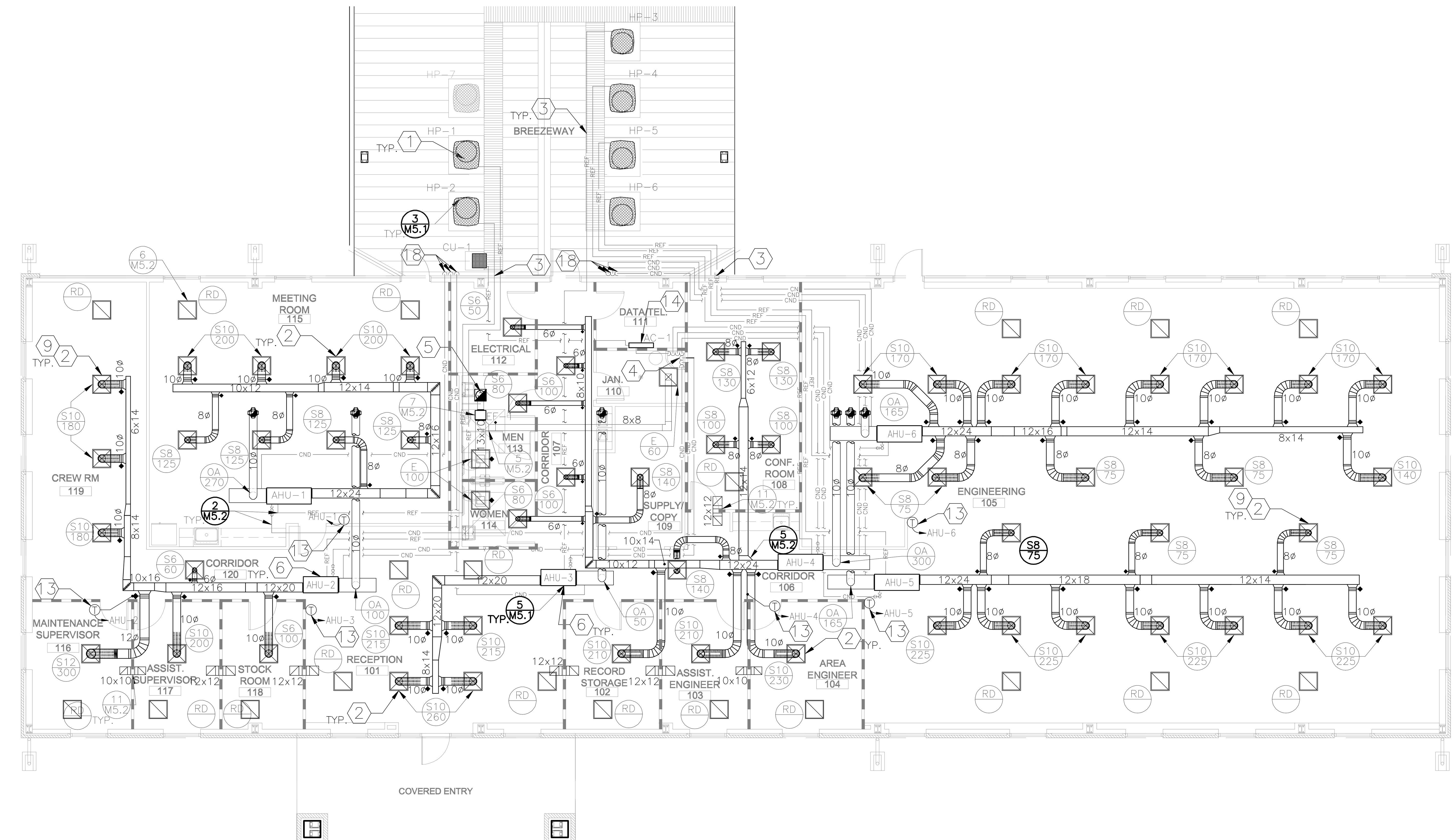

1 FLOOR PLAN - OFFICE BUILDING

SCALE: 1/8" = 1'-0"

0' 2' 4' 8' 16'

KEYED NOTES "⬡"

1. INSTALL VIBRATION ISOLATION PADS. MAINTAIN CLEARANCES BETWEEN EACH UNIT AND EDGE OF PAD AS DESCRIBED IN THE GENERAL NOTES. ANCHOR OUTDOOR UNIT TO ROOF CURB WITH FOUR LOOSE CABLES WITH ONE END BOLTED TO THE OUTDOOR UNIT AND THE OTHER END BOLTED TO THE CURB. CABLES SHALL BE LOOSE ENOUGH TO NOT TRANSMIT VIBRATION, BUT SHORT ENOUGH TO PREVENT THE UNIT FROM MOVING.
2. CONTRACTOR MAY USE FLEXIBLE METAL DUCT AS DESCRIBED IN THE GENERAL NOTES.
3. ROUTE FREON LINES AND CONTROL WIRING ABOVE CEILING TO EXTERIOR WALL. PENETRATE EXTERIOR WALL WITH FREON LINES AND CONTROL WIRING TO BREEZE WAY CAVITY LOCATED ABOVE SOFFIT ACCESS PANELS. ROUTE FREON LINES THROUGH CAVITY ABOVE ACCESS PANELS TO ROOF CURBS. DAYLIGHT FREON LINES AND CONTROL WIRING THROUGH THE SIDE OF THE ROOF CURB, JUST BELOW PROVIDED FLASHING. INSULATE AND SEAL EXTERIOR WALL PENETRATION. SEAL REFRIGERANT LINE PENETRATION THROUGH SIDE OF ROOF CURB. CONTROL WIRING SHALL BE IN EMT CONDUIT ABOVE CEILING AND IN BREEZEWAY CAVITY. EXPOSED CONDUIT SHALL BE LIQUID TIGHT FLEXIBLE METAL CONDUIT.
4. ROUTE 3/4" HARDDRAWN TYPE "K" COPPER PIPING CONDENSATE DRAIN FROM EACH INDOOR UNIT TO MOP SINK. TERMINATE EACH CONDENSATE DRAIN OVER MOP SINK DRAIN, MAINTAIN SLOPE 1/8" TO 1/4" PER FOOT WITH AN ELBOW INSTALLED IN THE DOWN POSITION. PROVIDE 1" AIR GAP ABOVE MOP SINK.
5. DISCHARGE EXHAUST AIR TO ROOF JACK. SUSPEND EXHAUST FAN WITH UNISTRUT AND SPRING VIBRATION ISOLATORS.
6. PROVIDE AND INSTALL PLEATED FILTERS AND SUPPLY AND RETURN FLEXIBLE CONNECTORS FOR EACH INDOOR UNIT PER MANUFACTURER RECOMMENDATIONS.
7. INSTALL AND PROVIDE A DUCT MOUNTED SMOKE DETECTOR IN THE RETURN AND THE SUPPLY AIR DUCT. SMOKE DETECTOR SHALL SHUT DOWN AHU–7. THE SMOKE DETECTOR IN THE SUPPLY SHALL BE LOCATED JUST BEFORE THE FIRST BRANCH AIR DUCT.
8. NOT USED.
9. ALL GRILLES AND DIFFUSERS IN ALL SPACES SHALL BE COORDINATED WITH BUILDING STRUCTURE AND SUPPORTED AT ALL FOUR CORNERS. (SEE ARCHITECTURAL AND STRUCTURAL DRAWINGS).
10. NOT USED.
11. NOT USED.

.....CONTINUED KEYED NOTES "⬡"

12. INSTALL AND PROVIDE A 4"ø LISTED TYPE "B" VENT EXTEND 24" ABOVE ROOF.
13. INSTALL THERMOSTAT ON WALL 48" A.F.F.
14. MOUNT INDOOR UNIT CENTERED ON WALL 7FT ABOVE FINISHED FLOOR TO THE BOTTOM OF UNIT, COORDINATE WITH TRADES TO ENSURE UNIT DOES NOT OBSTRUCT OTHER EQUIPMENT IN ROOM.
15. TRANSITION DUCT TO FIT CURB AND DAMPER. DUCT INTAKE AIR PARALLEL WITH ROOF DECK DROP DOWN AT WALL TO FLOOR 16"X16", 18 GAUGE SHEETMETAL LEAVE BOTTOM OF DUCT OPEN 24" A.F.F. PROVIDE AND INSTALL BIRDSCREEN.
16. ROUTE CONDENSATE LINE DOWN WALL INSIDE OF RADIO ROOM AND PENETRATE SLAB TO TIE INTO SHOWER DRAIN. INSTALL AN AIR GAP FITTING IN CONDENSATE LINE ON THE WALL INSIDE OF RADIO ROOM.
17. INSTALL BOTTOM OF LOUVER 10FT A.F.F. COORDINATE WITH BUILDING STRUCTURE. (SEE ARCHITECTURAL AND STRUCTURAL DRAWINGS). INSTALL ASSEMBLY TO MANUFACTURER RECOMMENDATIONS. SECURE THE MOUNTING PLATFORM TO BUILDING BEAM. DUCT FAN DISCHARGE TO LOUVER.
18. STUB SECONDARY CONDENSATE LINE FROM END OF AHU DRAIN PAN AND ROUTE TO OUTSIDE OF BUILDING AS INDICATED IN PLAN. MAINTAIN A SLOPE OF 1/4" PER FOOT. STUB DOWN THRU SOFFIT.
19. INSTALL EXHAUST FAN ON ROOF CURB.
20. COORDINATE WITH ELECTRICAL. MECHANICAL SHALL SUPPLY ALL THERMOSTATS. ELECTRICAL SHALL PROVIDE WIRE AND CONDUIT AND INSTALL THE 120V THERMOSTATS WHICH SHALL CONTROL THE INFRARED HEATERS.
21. ROTATE INFRARED HEATER 20° TOWARD CENTER OF ROOM. INSTALL BOTTOM OF HEATER 14FT A.F.F.
22. NOT USED
23. EXTEND WELDING EXHAUST DUCTWORK UP AND EXIT THRU CLEAR STORY.
24. FIRE CAULK ALL PENETRATIONS IN FIRE WALL. (SEE GENERAL NOTES).
25. INSTALL BOTTOM OF LOUVER 18" A.F.F. COORDINATE WITH BUILDING STRUCTURE. (SEE ARCHITECTURAL AND STRUCTURAL DRAWINGS).

MECHANICAL LEGEND

SUPPLY DIFFUSER	DUCT SIZE CHANGE
RETURN GRILLE, OR EXHAUST	RECTANGULAR ELBOW WITH TURNING VANES
VOLUME BALANCING DAMPER	XX GRILLE TYPE, CFM AIR FLOW
VENTILATION LOUVER	RECTANGULAR "BOOT" TAP
T THERMOSTAT S REMOTE SENSOR H HUMIDISTAT	ROUND "CONICAL" FITTING WITH VOLUME DAMPER
	STATIONARY SPLITTER WITH TURNING VANES AND DAMPER
DETAIL NUMBER / SHEET DESIGNATOR	VAINED, RADIUS ELBOW

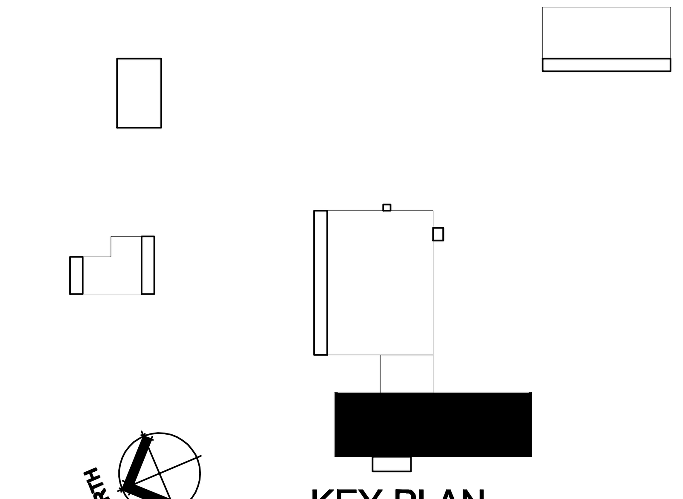

KEY PLAN

MECHANICAL PLAN - OFFICE BUILDING

NOTE: THIS DRAWING WAS CREATED FOR PRODUCTION ON 22" x 34" SHEET SIZE. DO NOT SCALE PRINTS.

Texas Department of Transportation
125 E. 11th Street
Austin, Texas 78701-2483
(512) 416-3048

Copyright © 2005 Texas Department of Transportation

THIS DOCUMENT IS RELEASED FOR THE PURPOSE OF INFORMATION ONLY
NOT FOR REGULATORY APPROVAL, PERMITTING, OR CONSTRUCTION.

WACO AREA ENGINEER AND MAINTENANCE FACILITY

WACO, MCLENNAN COUNTY
WACO DISTRICT

Revisions

△
△
△
△

Drawn by: KCR

Project No. CBC4704-00672

Date 05.21.2007

Sheet No.

M2.1

of 8 M sheets

SEE M2.1 FOR GENERAL AND KEYED NOTES

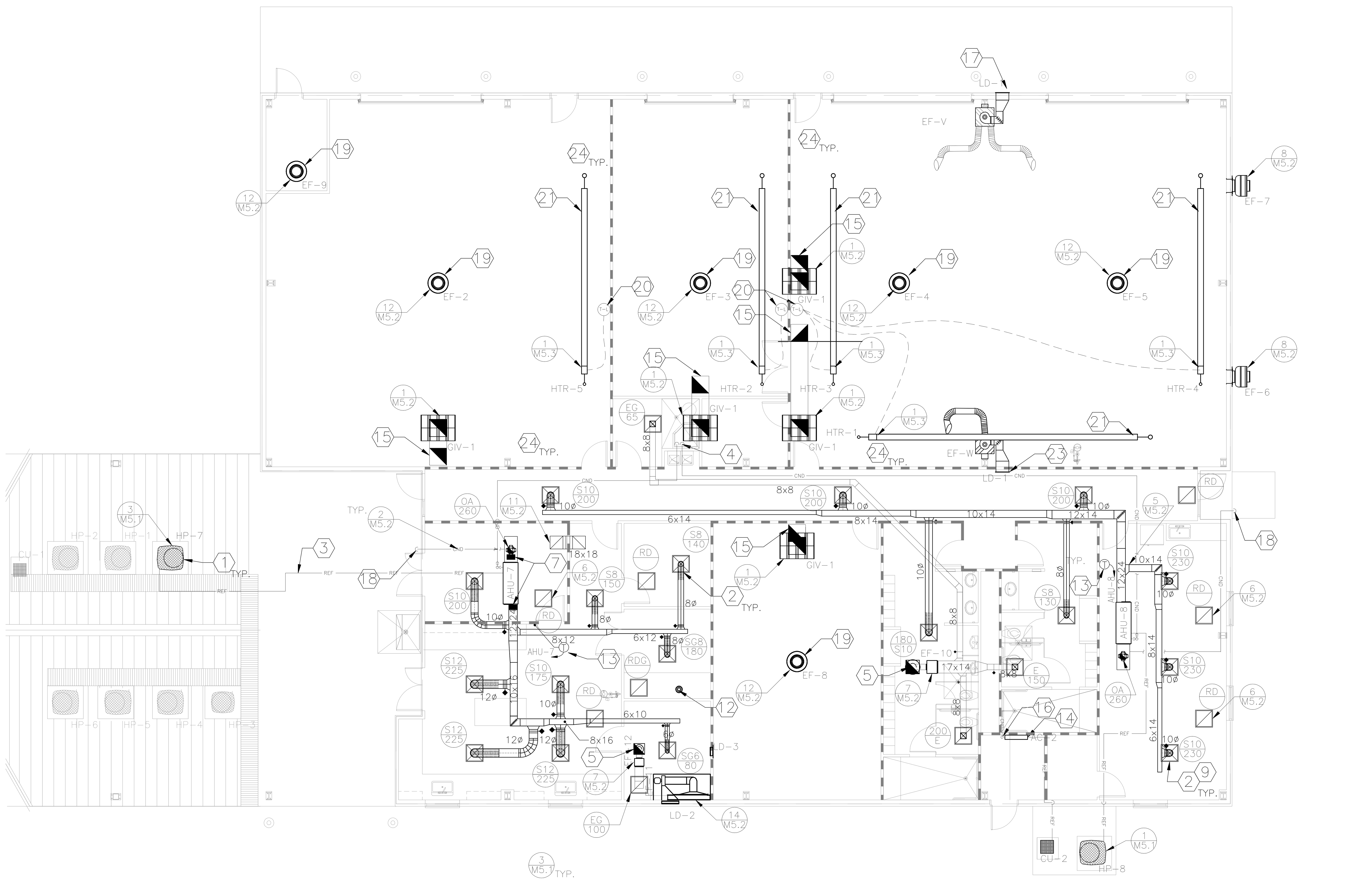

1 FLOOR PLAN - LAB/SHOP BUILDING

SCALE: 1/8" = 1'-0"

0' 2' 4' 8' 16'

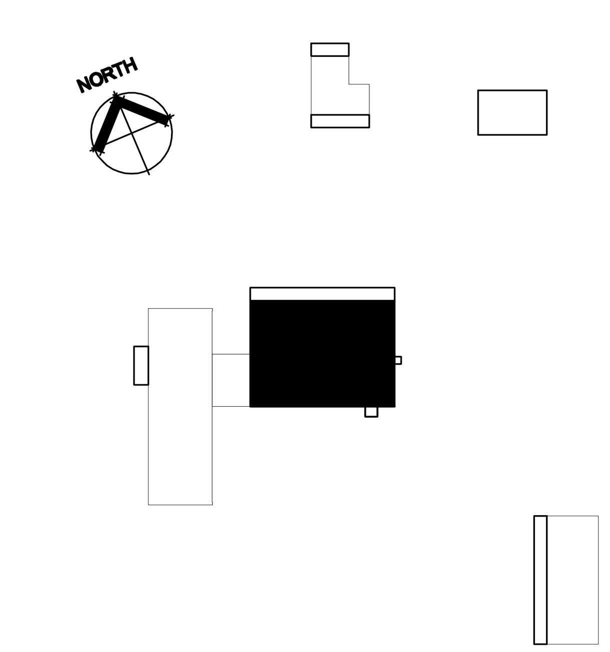

KEY PLAN

Texas Department of Transportation
125 E. 11th Street
Austin, Texas 78701-2483
(512) 416-2648

Copyright © 2005 Texas Department of Transportation

THIS DOCUMENT IS RELEASED FOR THE PURPOSE OF INFORMATION ONLY
NOT FOR REGULATORY APPROVAL, PERMITTING, OR CONSTRUCTION.

WACO AREA ENGINEER AND MAINTENANCE FACILITY

WACO, MCLENNAN COUNTY
WACO DISTRICT

Revisions

Drawn by: KCR
Project No. CBC4704-00672
Date 05.21.2007
Sheet No.

M2.2
of 8 M sheets

MECHANICAL PLAN - LAB/SHOP BUILDING

NOTE: THIS DRAWING WAS CREATED FOR PRODUCTION ON 22" x 34" SHEET SIZE. DO NOT SCALE PRINTS.

SEE M2.1 FOR GENERAL AND KEYED NOTES

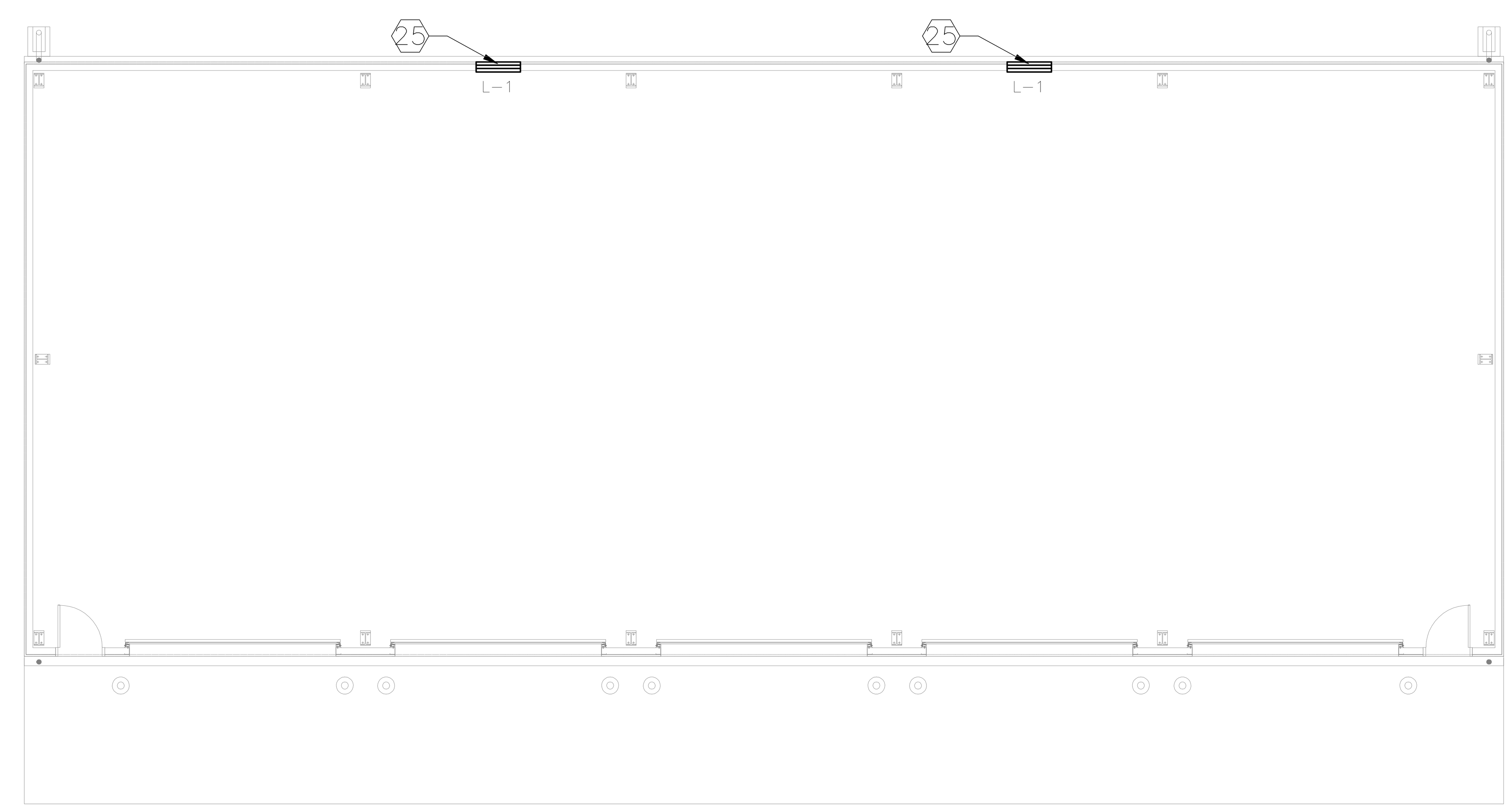

1 FLOOR PLAN - VEHICLE STORAGE BUILDING

SCALE: 1/8" = 1'-0"

0' 2' 4' 8' 16'

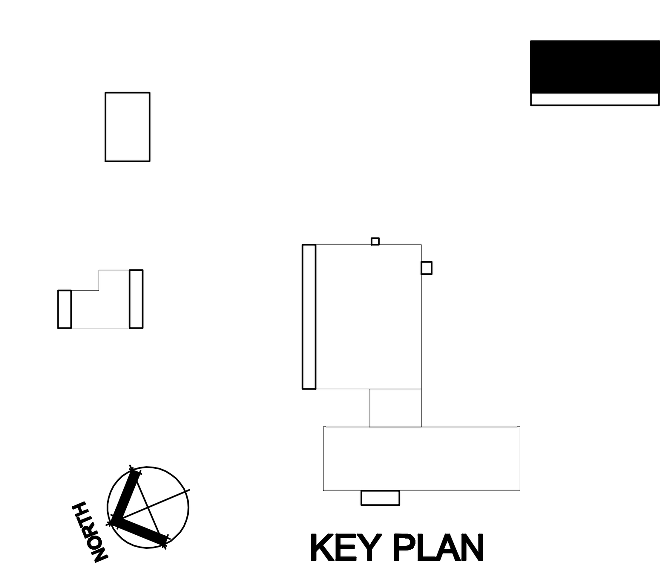

KEY PLAN

Texas Department of Transportation
125 E. 11th Street
Austin, Texas 78701-2483
(512) 416-2046
Copyright © 2005 Texas Department of Transportation

THIS DOCUMENT IS RELEASED FOR THE PURPOSE OF INFORMATION ONLY
NOT FOR REGULATORY APPROVAL, PERMITTING, OR CONSTRUCTION.

WACO AREA ENGINEER AND MAINTENANCE FACILITY

WACO, MCLENNAN COUNTY
WACO DISTRICT

Revisions

Drawn by: KCR

Project No. CBC4704-00672

Date 05.21.2007

Sheet No.

M2.3

of 8 M sheets

MECHANICAL PLAN - VEHICLE STORAGE BUILDING

NOTE: THIS DRAWING WAS CREATED FOR PRODUCTION ON 22" x 34" SHEET SIZE. DO NOT SCALE PRINTS.

HEAT PUMP SCHEDULE

INDOOR UNIT:	AHU-1	AHU-2	AHU-3	AHU-4	AHU-5	AHU-6	AHU-7	AHU-8
*ELECTRIC RESISTANCE HEATER MODEL No.	BAYHTR3415000	BAYHTR3410000	BAYHTR3410000	BAYHTR3415000	BAYHTR3415000	BAYHTR3415000	BAYHTR3415000	BAYHTR3415000
*AUX. HEAT INPUT, KW / CONTROL STAGES	11.53 / 1	7.20 / 1	7.20 / 1	11.53 / 1	11.53 / 1	11.53 / 1	11.53 / 1	11.53 / 1
*AUX. HEATING CAPACITY, BTUH	39,300	24,600	24,600	39,300	39,300	39,300	39,300	39,300
*UNIT VOLTS / PHASE / HZ	208 / 3 / 60	208 / 3 / 60	208 / 3 / 60	208 / 3 / 60	208 / 3 / 60	208 / 3 / 60	208 / 3 / 60	208 / 3 / 60
*CIRCUIT#1 MCA / MOCP	44 / 45	45 / 45	37 / 40	45 / 45	45 / 45	45 / 45	44 / 45	44 / 45
CIRCUIT#2 MCA / MOCP	N/A	N/A	N/A	N/A	N/A	N/A	N/A	N/A
FAN DRIVE TYPE / No. SPEEDS	DIRECT / 3	DIRECT / 3	DIRECT / 3	DIRECT / 4	DIRECT / 4	DIRECT / 4	DIRECT / 3	DIRECT / 3
DESIGN SUPPLY CFM (HORIZONTAL)	1600 @ 0.30" W.G.	1150 @ 0.30" W.G.	950 @ 0.37" W.G.	1800 @ 0.56" W.G.	1800 @ 0.56" W.G.	1800 @ 0.56" W.G.	1600 @ 0.30" W.G.	1600 @ 0.30" W.G.
DESIGN SUPPLY CFM (VERTICAL)	N/A	N/A	N/A	N/A	N/A	N/A	N/A	N/A
**DESIGN OUTSIDE AIR CFM (OA)	270	100	50	300	165	165	260	260
BLOWER FAN (HP)	1/2	1/3	1/3	1	1	1	1/2	1/2
NUMBER AND SIZE OF FILTERS (LOW VEL.)	(1) 20 x 20 x 1	(1) 20 x 20 x 1	(1) 20 x 20 x 1	(1) 20 x 22 x 1	(1) 20 x 22 x 1	(1) 20 x 22 x 1	(1) 20 x 20 x 1	(1) 20 x 20 x 1
MANUFACTURER	TRANE	TRANE	TRANE	TRANE	TRANE	TRANE	TRANE	TRANE
AIR HANDLER MODEL	2TEC3F48A1000AA	2TEC3F36A1000AA	2TEC3F30A1000AA	2TEC3F60A1000AA	2TEC3F60A1000AA	2TEC3F60A1000AA	2TEC3F48A1000AA	2TEC3F48A1000AA
No. REFRIGERANT CIRCUITS/ INDOOR UNIT	1	1	1	1	1	1	1	1
MOUNTING SUBBASE	N/A	N/A	N/A	N/A	N/A	N/A	N/A	N/A
OUTDOOR UNIT: (NOTE CAPACITIES LISTED/UNIT)	HP-1	HP-2	HP-3	HP-4	HP-5	HP-6	HP-8	HP-8
No. OUTDOOR UNITS / INDOOR UNIT	1	1	1	1	1	1	1	1
***RATED PERFORMANCE BASED ON	1600 @ 0.3" W.G.	1200 @ 0.21" W.G.	950 @ 0.37" W.G.	1865 @ 0.58" W.G.	1865 @ 0.58" W.G.	1865 @ 0.58" W.G.	1600 @ 0.3" W.G.	1600 @ 0.3" W.G.
***COOLING CAPACITY (TOTAL BTUH)	46,000	34,000	28,000	56,000	56,000	56,000	46,000	46,000
***COOLING CAPACITY (SENSIBLE BTUH)	33,200	24,800	20,400	40,000	40,000	40,000	33,200	33,200
***EER/SEER MATCHED AIR HANDLER	11.40 / 13.00	11.70 / 13.25	11.60 / 13.25	11.10 / 13.00	11.10 / 13.00	11.10 / 13.00	11.40 / 13.00	11.40 / 13.00
***HIGH TEMP. HTG. CAP. (BTUH)	42,500	32,200	26,000	53,000	53,000	53,000	42,500	42,500
***LOW TEMP. HTG. CAP. (BTUH)	N/A	N/A	N/A	N/A	N/A	N/A	N/A	N/A
***HIGH TEMPERATURE SYSTEM (COP)	3.50	3.50	3.50	3.50	3.50	3.50	3.50	3.50
***LOW TEMPERATURE SYSTEM (COP)	N/A	N/A	N/A	N/A	N/A	N/A	N/A	N/A
No. COMPRESSORS / OUTDOOR UNIT	1	1	1	1	1	1	1	1
COMPRESSOR TYPE	SCROLL	SCROLL	SCROLL	SCROLL	SCROLL	SCROLL	SCROLL	SCROLL
No. OUTDOOR FANS / OUTDOOR UNIT	1	1	1	1	1	1	1	1
REFRIGERANT	R-22	R-22	R-22	R-22	R-22	R-22	R-22	R-22
LOW AMBIENT (HEAD PRESSURE CONTROL)	0°F	0°F	0°F	0°F	0°F	0°F	0°F	0°F
*MIN CIRCUIT AMPACITY/MAX FUSE OR C.B.	16 / 25	11 / 15	9 / 15	23 / 40	23 / 40	23 / 40	16 / 25	16 / 25
*UNIT VOLTS / PHASE / HZ	208 /3 / 60	208 /3 / 60	208 /3 / 60	208 /3 / 60	208 /3 / 60	208 /3 / 60	208 /3 / 60	208 /3 / 60
MANUFACTURER	TRANE	TRANE	TRANE	TRANE	TRANE	TRANE	TRANE	TRANE
MODEL (OUTSIDE UNIT)	2TWA3048A3000AA	2TWA3036A3000AA	2TWA3030A3000AA	2TWA3060A3000AA	2TWA3060A3000AA	2TWA3060A3000AA	2TWA3048A3000AA	2TWA3048A3000AA

REMARKS:

* SINGLE POINT SERVICE CONNECTION

** PROVIDE GREENHECK GRSI-10 INTAKE CAP ON 17-1/2"x17-1/2" ROOF CURB WITH A DAMPER TRAY AND A BR-40 10"x10" BACKDRAFT DAMPER. REFER TO ARCHITECTURAL FOR ROOF CURD SPECIFICATIONS.

*** LISTED PERFORMANCE DATA IS BASED ON A.R.I STANDARD 210/240 CAPACITY RATING CONDITIONS.

1. CONTRACTOR SHALL PROVIDE THE FOLLOWING: ANTI-SHORT-CYCLE KIT, DEFROST CONTROL, HEAT PUMP COIL GUARDS AND RUBBER-IN-SHEAR ISOLATORS.
2. CONTRACTOR SHALL FOLLOW MANUFACTURER'S RECOMMENDATIONS FOR REFRIGERANT LINE LENGTHS AND SIZES.
3. THE UNITS LISTED AS "HEAT PUMPS" INCLUDE MATCHED INSIDE COIL MOUNTED TO THE AIR HANDLER, AS WELL AS THE EXPANSION VALVES, AND ALL OTHER APPURTENANCES NECESSARY FOR COMPLETE SYSTEMS.
4. MECHANICAL CONTRACTOR SHALL INSTALL HARD DRAWN TYPE "K" COPPER CONDENSATE DRAIN LINE TO DRAINS AS SHOWN ON PLANS.
5. THE INSTALLATION SHALL INCLUDE A PROGRAMMABLE AUTOCHANGEOVER PROGRAMMABLE 3 STAGE HEAT / 2 STAGE COOL THERMOSTAT JOHNSON CONTROLS #T500HPP-1. NOTE TO CONTRACTOR SECOND STAGE COOLING ON SCHEDULED THEROMSTAT WILL NOT BE USED ON THIS PROJECT.
6. CONTRACTOR SHALL PROVIDE AND INSTALL A SMOKE DETECTION SYSTEM WITH A SENSOR FOR EACH AIR HANDLER EXCEEDING 2000 CFM SUPPLY AIR. MOUNT DUCT MOUNTED SENSOR IN THE SUPPLY DUCT AND RETURN DUCT. INTERLOCK SMOKE DETECTION SHUT OFF DEVICE WITH THE AIR HANDLER FANS.
7. THE CONTRACTOR SHALL GUARANTEE ALL INSTALLED EQUIPMENT, MATERIAL, AND WORK INCLUDED IN THIS CONTRACT AGAINST ANY DEFECTS IN MATERIAL OR WORKMANSHIP; AND SHALL SATISFACTORILY CORRECT, AT NO COST TO THE STATE, ANY SUCH DEFECT THAT MAY BECOME APPARENT WITHIN A PERIOD OF ONE YEAR AFTER COMPLETION OF THE INSTALLATION. THE WARRANTY PERIOD SHALL COMMENCE ON THE DATE OF ACCEPTANCE OF THE CONTRACT BY THE STATE. A MANUFACTURER'S 4 YEAR EXTENDED COMPRESSOR WARRANTY (BEYOND THE INITIAL ONE YEAR PERIOD) SHALL BE INCLUDED WHEN OFFERED BY THE MANUFACTURER FOR ALL SIZES OF UNITARY AND SELF-CONTAINED DIRECT EXPANSION EQUIPMENT. INSURANCE POLICIES ARE NOT ACCEPTABLE.
8. ALL COMPONENTS OF EACH HVAC SYSTEM SHALL BE PRODUCTS OF THE SAME MANUFACTURER, AND SHALL BE PERFORMANCE MATCHED WITH PUBLISHED PERFORMANCE RATINGS. HVAC SYSTEMS WITH COMPONENTS FROM DIFFERENT MANUFACTURERS, EVEN SUBSIDIARIES OF THE SAME COMPANY, WILL NOT BE ACCEPTED.
9. ALL INDOOR UNITS SHALL HAVE FLEXIBLE CONNECTIONS ON THE SUPPLY AND RETURN DUCT WITH PLEATED FILTERS INSTALLED.

INFRA-RED RADIANT HEATER SCHEDULE

MARK	MBTU	MANUFACTURER, MODEL/SIZE	DESCRIPTION
HTR-1	100	RE-VERBER-RAY, DX 30-100	30FT LONG, INFRA-RED LIQUIFIED PETROLEUM GAS FIRED TUBE HEATER DX SERIES WITH A 100,000 BTUH. INPUT RATING. THE EMITTER & COMBUSTION CHAMBER ARE ALUMINIZED STEEL 16 GAGE 4" O.D. CONSTRUCTION AND COATED WITH A HIGH TEMPERATURE CORROSION RESISTANT COATING. THE POWER SUPPLY IS 120V, 3-WIRE SYSTEM. THE BURNER SHALL BE CONTROLLED WITH A 100% SAFETY SHUT-OFF SYSTEM WITH DUAL DIFFERENTIAL PRESSURE SWITCHES AND A SILICON CARBIDE HOT SURFACE IGNITOR.
HTR-2	50	RE-VERBER-RAY, DX 20-50	20FT LONG, INFRA-RED LIQUIFIED PETROLEUM GAS FIRED TUBE HEATER DX SERIES WITH A 50,000 BTUH. INPUT RATING. THE EMITTER & COMBUSTION CHAMBER ARE ALUMINIZED STEEL 16 GAGE 4" O.D. CONSTRUCTION AND COATED WITH A HIGH TEMPERATURE CORROSION RESISTANT COATING. THE POWER SUPPLY IS 120V, 3-WIRE SYSTEM. THE BURNER SHALL BE CONTROLLED WITH A 100% SAFETY SHUT-OFF SYSTEM WITH DUAL DIFFERENTIAL PRESSURE SWITCHES AND A SILICON CARBIDE HOT SURFACE IGNITOR.
HTR-3, 4 & 5	75	RE-VERBER-RAY, DX 20-75	20FT LONG, INFRA-RED LIQUIFIED PETROLEUM GAS FIRED TUBE HEATER DX SERIES WITH A 75,000 BTUH. INPUT RATING. THE EMITTER & COMBUSTION CHAMBER ARE ALUMINIZED STEEL 16 GAGE 4" O.D. CONSTRUCTION AND COATED WITH A HIGH TEMPERATURE CORROSION RESISTANT COATING. THE POWER SUPPLY IS 120V, 3-WIRE SYSTEM. THE BURNER SHALL BE CONTROLLED WITH A 100% SAFETY SHUT-OFF SYSTEM WITH DUAL DIFFERENTIAL PRESSURE SWITCHES AND A SILICON CARBIDE HOT SURFACE IGNITOR.
T-L	---	COLUMBUS, S2022-11	120V SINGLE STAGE ELECTRIC THERMOSTAT WITH A CONTROL TEMPERATURE RANGE FROM 40° TO 80° F. HOUSED IN A WHITE PLASTIC COVER WITH DIAL ADJUSTMENT. THERMOSTAT SHALL BE CAPABLE OF CONTROLLING UP TO 4 INFRARED TUBE HEATERS.

NOTE: SUPPLY AND INSTALL AN 8" DIRT LEG AND A POINT OF USE GAS COCK WITH A SIDE PRESSURE TAP FOR EACH HEATER. REFER TO INFRARED HEATER DETAILS.

WALL MOUNTED SPLIT SYSTEM

INDOOR UNIT:	AC-1	AC-2
*UNIT VOLTS / PHASE / HZ	OUTDOOR UNIT	OUTDOOR UNIT
*MCA / MOCP	N/A	N/A
FAN DRIVE TYPE / No. SPEEDS	AUTO / 3	AUTO / 3
BLOWER FAN (HP)	0.024	0.024
NUMBER AND SIZE OF FILTERS (LOW VEL.)	FURNISHED	FURNISHED
MANUFACTURER	TRANE	TRANE
AIR HANDLER MODEL	MCW512AMUAO	MCW512AMUAO
No. REFRIGERANT CIRCUITS/ INDOOR UNIT	1	1
ELECTRIC RESISTANCE HEATER MODEL No.	N/A	N/A
OUTDOOR UNIT: (NOTE CAPACITIES LISTED/UNIT)	CU-1	CU-2
No. OUTDOOR UNITS / INDOOR UNIT	1	1
**RATED PERFORMANCE BASED ON	311 CFM	311 CFM
**COOLING CAPACITY (TOTAL BTUH)	13,250	13,250
**COOLING CAPACITY (SENSIBLE BTUH)	8,215	8,215
**EER/SEER MATCHED AIR HANDLER	9.60 / 11.2	9.60 / 11.2
No. COMPRESSORS / OUTDOOR UNIT	1	1
COMPRESSOR TYPE	SCROLL	SCROLL
No. OUTDOOR FANS / OUTDOOR UNIT	1	1
REFRIGERANT	R-22	R-22
LOW AMBIENT (HEAD PRESSURE CONTROL)	30°F	30°F
*MIN CIRCUIT AMPACITY/MAX FUSE OR C.B.	11 / 15	11 / 15
*UNIT VOLTS / PHASE / HZ	208 / 1 / 60	208 / 1 / 60
MANUFACTURER	TRANE	TRANE
MODEL (OUTSIDE UNIT)	TTB012C100A	TTB012C100A

REMARKS:

* SINGLE POINT SERVICE CONNECTION

** LISTED PERFORMANCE DATA IS BASED ON A.R.I STANDARD 210/240 CAPACITY RATING CONDITIONS.

1. CONTRACTOR SHALL FOLLOW MANUFACTURER'S RECOMMENDATIONS FOR REFRIGERANT LINE LENGTHS AND SIZES.
2. THE ABOVE SCHEDULED DUCTLESS SPLIT SYSTEM HAS AN OUTDOOR CONDENSING UNIT AND A WALL MOUNTED AIR HANDLER UNIT WITH REMOTE CONTROL FEATURES. WALL MOUNTED THERMOSTATS ARE ACCEPTABLE.
3. UNIT SHALL INCLUDE A PERMANENT WASHABLE FILTER.
4. MECHANICAL CONTRACTOR SHALL INSTALL HARD DRAWN TYPE "K" COPPER CONDENSATE DRAIN LINE TO DRAINS AS SHOWN ON PLANS.
5. THE CONTRACTOR SHALL GUARANTEE ALL INSTALLED EQUIPMENT, MATERIAL, AND WORK INCLUDED IN THIS CONTRACT AGAINST ANY DEFECTS IN MATERIAL OR WORKMANSHIP; AND SHALL SATISFACTORILY CORRECT, AT NO COST TO THE STATE, ANY SUCH DEFECT THAT MAY BECOME APPARENT WITHIN A PERIOD OF ONE YEAR AFTER COMPLETION OF THE INSTALLATION. THE WARRANTY PERIOD SHALL COMMENCE ON THE DATE OF ACCEPTANCE OF THE CONTRACT BY THE STATE. A MANUFACTURER'S 4 YEAR EXTENDED COMPRESSOR WARRANTY (BEYOND THE INITIAL ONE YEAR PERIOD) SHALL BE INCLUDED WHEN OFFERED BY THE MANUFACTURER FOR ALL SIZES OF UNITARY AND SELF-CONTAINED DIRECT EXPANSION EQUIPMENT. INSURANCE POLICIES ARE NOT ACCEPTABLE.
6. ALL COMPONENTS OF EACH HVAC SYSTEM SHALL BE PRODUCTS OF THE SAME MANUFACTURER, AND SHALL BE PERFORMANCE MATCHED WITH PUBLISHED PERFORMANCE RATINGS. HVAC SYSTEMS WITH COMPONENTS FROM DIFFERENT MANUFACTURERS, EVEN SUBSIDIARIES OF THE SAME COMPANY, WILL NOT BE ACCEPTED.

Texas Department of Transportation
125 E. 11th Street
Austin, Texas 78701-2483
(512) 416-3048

Copyright © 2005 Texas Department of Transportation

THIS DOCUMENT IS RELEASED FOR THE PURPOSE OF
INFORMATION ONLY
NOT FOR REGULATORY
APPROVAL, PERMITTING,
OR CONSTRUCTION.

WACO AREA ENGINEER AND MAINTENANCE FACILITY

WACO, MCLENNAN COUNTY
WACO DISTRICT

Revisions

Drawn by: KCR
Project No. CBC4704-00672
Date 05.21.2007
Sheet No. M4.1 of 8 M sheets

MECHANICAL SCHEDULES - 1

NOTE: THIS DRAWING WAS CREATED FOR PRODUCTION ON 22" x 34" SHEET SIZE. DO NOT SCALE PRINTS.

CADFILE: T:\MNTFMD02FTWCBC4704-00-637\02-77-470400637\Acad\prototypical pdfs\waco\Acad\MEP\MECH\M4_1_TO_M4_2.dwg Plotted: Fri. Aug. 07, 2009 @ 1:36 PM By: MBAZAN

EXHAUST FAN SCHEDULE

UNIT	MODEL#	MANUFACTURER NAME	EXHAUST FAN DESCRIPTION	DESIGN EXHAUST (CFM)	EXHAUST CFM/@ IN. W.G. ΔP	MOTOR RPM	INPUT HP (AMPS)	SONES	VOLTS/ PHASE/HZ	DRIVE	INSTALLATION DESCRIPTION	ROOF CURB (WALLFLANGE) SIZE	ROOF CURB HEIGHT IN.	DUCT/DAMPER INLET SIZE WXH (IN.)	COMMENTS
EF-1	CSP-A290	GREENHECK	IN-LINE	260	265/0.25	1050	(0.71)	2.6	120/1/60	DIRECT	SUSPEND	15	6	12-7/8 x 10	GREENHECK RCC-7 EXHAUST CAP INSTALLED ON ROOF CURB
EF-2	CUE-161-C	GREENHECK	UPBLAST	2,105	2,126/0.25	860	1/4	9.9	120/1/60	DIRECT	ROOF CURB	22	12	18-1/2 x 18-1/2	
EF-3	CUE-161-C	GREENHECK	UPBLAST	2,105	2,126/0.25	860	1/4	9.9	120/1/60	DIRECT	ROOF CURB	22	12	18-1/2 x 18-1/2	
EF-4	CUE-161-C	GREENHECK	UPBLAST	2,105	2,126/0.25	860	1/4	9.9	120/1/60	DIRECT	ROOF CURB	22	12	18-1/2 x 18-1/2	
EF-5	CUE-161-C	GREENHECK	UPBLAST	2,105	2,126/0.25	860	1/4	9.9	120/1/60	DIRECT	ROOF CURB	22	12	18-1/2 x 18-1/2	
EF-6	CW-161-C	GREENHECK	SIDEWALL	2,105	2,126/0.25	860	1/4	9.9	120/1/60	DIRECT	SIDEWALL	(22-1/8)	N/A	18-1/2 x 18-1/2	
EF-7	CW-161-C	GREENHECK	SIDEWALL	2,105	2,126/0.25	860	1/4	9.9	120/1/60	DIRECT	SIDEWALL	(22-1/8)	N/A	18-1/2 x 18-1/2	
EF-8	CUE-121-B	GREENHECK	UPBLAST	900	1,180/0.25	1140	1/6	8.2	120/1/60	DIRECT	ROOF CURB	19	12	14-1/2 x 14-1/2	
EF-9	CUE-60-E	GREENHECK	UPBLAST	80	81/0.125	1050	1/200	1.17	120/1/60	DIRECT	ROOF CURB	17	12	10-1/2 x 10-1/2	
EF-10	CSP-A510	GREENHECK	IN-LINE	415	464/0.25	1,070	(1.8)	2.8	120/1/60	DIRECT	SUSPEND	20-1/2	6	16-7/8 x 13-1/4	GREENHECK GRS-10 EXHAUST CAP INSTALLED ON ROOF CURB
EF-11	SFD-9-4C	GREENHECK	BLOWER	750	710/0.3	860	1/4	6.7	120/1/60	DIRECT	FLOOR MOUNT	N/A	N/A	10-1/8 x 6-1/4	ARRANGEMENT 4, CW ROTATION, DISCHARGE TH, GREENKOTE COATING
EF-12	CSP-A110	GREENHECK	IN-LINE	100	102/0.250	950	(0.62)	1.3	120/1/60	DIRECT	SUSPEND	15	6	12 X 9 1/4	GREENHECK RCC-7 EXHAUST CAP INSTALLED ON ROOF CURB
EF-W	EX-100	CAR-MON	WELDING	600	600/3.00	N/A	3/4	N/A	120/1/60	DIRECT	BEAM MOUNT	N/A	N/A	N/A	
EF-V	DUAL CO-X	CAR-MON	VEHICLE	600	600/3.00	N/A	3/4	N/A	120/1/60	DIRECT	BEAM MOUNT	N/A	N/A	N/A	
EF-WB	SE1-8-428-P	GREENHECK	PROPELLER	250	237/0.125	1650	1/40	N/A	120/1/60	DIRECT	SIDEWALL	N/A	N/A	12 X 12	SEE SHEET P2.3 FOR LOCATION.

REMARKS:

1. EF-1 & 10 INTERLOCK EXHAUST FAN WITH LIGHT SWITCHES. (SEE ELECTRICAL).
2. EF-6 & 7, INTERLOCK EXHAUST FAN WITH PROPANE LEAK DETECTION CONSOLE. (SEE ELECTRICAL). PROVIDE ALUMINUM RUB RING, AND BAKED PHENOLIC COATING ON ALL SURFACES EXPOSED TO AIRFLOW. MOTOR SHALL BE EXPLOSION PROOF AND MOUNTED OUT OF THE AIR STREAM.
3. EF-W, WELDING EXHAUST ASSEMBLY WITH CMW-9 FAN, 10 FEET TYPE PT WELDPROOF TUBING, SERIES EX-WB WALL PLATFORM AND "M" FUME RECEPTOR FITTING. CONTRACTOR SHALL INSTALL UNIT PER MANUFACTURER'S RECOMMENDATIONS. DUCT EXHAUST TO SCHEDULED LOUVER.
4. EF-V, VEHICLE EXHAUST PACKAGE, WITH SPRING ASSIST BALANCERS AND SLINGS, TWO 5" TYPE CLX HIGH TEMPERATURE TUBING, 30 FEET EACH, EPDM EXHAUST PIPE ADAPTERS CAR-MON SERIES CWM-9 FAN. ASSEMBLY SHALL BE SUITABLE FOR SIDE WALL MOUNTING AND SHALL BE MOUNTED PER MANUFACTURERS RECOMMENDATIONS. DUCT EXHAUST TO SCHEDULED LOUVER.
5. ALL ROOF JACKS SHALL BE INSTALLED BY ROOFER PER ARCHITECTURAL PLANS AND SPECIFICATIONS. SEE KEYED NOTES IN PLANS FOR EACH ROOF JACK LOCATION. SUSPEND EACH INLINE CABINET FAN WITH HANGING VIBRATION ISOLATORS.
6. PROVIDE AND INSTALL A BACKDRAFT DAMPER AND BIRDSREEN PROVIDED BY FAN MANUFACTURER ON ALL FANS.
7. CONTRACTOR SHALL INSTALL AND PROVIDE ROOF CURBS WITH A DAMPER SHELF FOR ALL ROOF MOUNTED EXHAUST FANS. CONTRACTOR IS RESPONSIBLE FOR MATCHING ROOF PROFILE AND PITCH ON ALL ROOF CURBS.
8. NOTE ALL EXHAUST FANS SHALL BE RUNNING WHILE PERFORMING TESTING AND AIR BALANCING MEASUREMENTS.
9. PROVIDE AND INSTALL GRAINGER #2E340 WALL MOUNTED FAN THERMOSTAT TO CONTROL BOTH EF-WB AND LOUVER L-WB2. SEE SHEET P2.3 FOR LOCATION.

DIFFUSER / GRILLE SCHEDULE

MARK	MANUFACTURER, MODEL/SIZE	DESCRIPTION
S12	MANUFACTURED BY TITUS TMS-AA-12-24X24-3-26-EG-IB-D75	FULL FACE T-BAR LAY-IN STYLE SQUARE CEILING DIFFUSER. ALL ALUMINUM CONSTRUCTION WITH FACTORY WHITE FINISH, WITH REMOVABLE 3-CONE INNER ASSEMBLIES; REMOVABLE BUTTON PLUG FOR ACCESS TO DAMPER OPERATOR AFTER INSTALLATION. INTEGRAL OPPOSED BLADE DAMPER COMPLETE WITH ROUND EQUALIZING GRID AND FACTORY INSTALLED ½" THICK FOIL BACKED INSULATION.
S10	MANUFACTURED BY TITUS TMS-AA-10-24X24-3-26-EG-IB-D75	
S8	MANUFACTURED BY TITUS TMS-AA-8-24X24-3-26-EG-IB-D75	
S6	MANUFACTURED BY TITUS TMS-AA-6-24X24-3-26-EG-IB-D75	
SG10	MANUFACTURED BY TITUS TMS-AA-10-24X24-1-26-EG-IB-D75	SURFACE MOUNT STYLE SQUARE CEILING DIFFUSER. ALL ALUMINUM CONSTRUCTION WITH FACTORY WHITE FINISH, WITH REMOVABLE 3-CONE INNER ASSEMBLIES; REMOVABLE BUTTON PLUG FOR ACCESS TO DAMPER OPERATOR AFTER INSTALLATION. INTEGRAL OPPOSED BLADE DAMPER COMPLETE WITH ROUND EQUALIZING GRID AND FACTORY INSTALLED ½" THICK FOIL BACKED INSULATION.
SG8	MANUFACTURED BY TITUS TMS-AA-8-24X24-1-26-EG-IB-D75	
SG6	MANUFACTURED BY TITUS TMS-AA-6-12X12-1-26-EG-IB-D75	
RD	MANUFACTURED BY TITUS 50F-24X24-3-26-A	T-BAR LAY-IN STYLE 24" x 24" SQUARE 1/2" x 1/2" x 1/2" EGGCRATE CORE CEILING RETURN GRILLE. ALL ALUMINUM CONSTRUCTION WITH FACTORY WHITE FINISH.
RDG	MANUFACTURED BY TITUS 50F-24X24-1-26-A	SURFACE MOUNT STYLE 24" x 24" SQUARE 1/2" x 1/2" x 1/2" EGGCRATE CORE CEILING RETURN GRILLE. ALL ALUMINUM CONSTRUCTION WITH FACTORY WHITE FINISH.
E	MANUFACTURED BY TITUS 50F-F-24X24-3-26-A	T-BAR LAY-IN STYLE 24" x 24" SQUARE 1/2" x 1/2" x 1/2" EGGCRATE CORE CEILING EXHAUST GRILLE WITH FILTER FRAME. INSTALL A PLEATED FILTER. ALL ALUMINUM CONSTRUCTION WITH FACTORY WHITE FINISH. TRANSISTION DUCT TO FIT GRILLE.
EG	MANUFACTURED BY TITUS 50F-F-24X24-1-26-A	SURFACE MOUNT STYLE 24" x 24" SQUARE 1/2" x 1/2" x 1/2" EGGCRATE CORE CEILING EXHAUST GRILLE WITH FILTER FRAME. ALL ALUMINUM CONSTRUCTION WITH FACTORY WHITE FINISH. TRANSISTION DUCT TO FIT GRILLE.

NOTE: DO NOT USE INTEGRAL OPPOSED BLADE DAMPERS IN GRILLES FOR BALANCING. UNLESS NOTED OTHERWISE. SUPPORT ALL T-BAR LAY IN GRILLES AT ALL FOUR CORNERS. SUPPORT ALL FLUSH MOUNT SIDEWALL REGISTERS, GRILLES AND ACCESS DOORS ON ALL FOUR SIDES BY PROVIDING BLOCKING IN FRAMING.

GRAVITY INTAKE/RELIEF VENTILATORS AND LOUVER SCHEDULE

MARK	MANUFACTURER, MODEL/SIZE	DESCRIPTION
GIV-1	MANUFACTURED BY GREENHECK FHI & WD-410 FAN CURB: 32 in. W x 32 in. H FAN THROAT: 24 in. W x 24 in. H INTAKE DAMPER: 24 in. W x 24 in. H	GRAVITY INTAKE FABRA HOOD AND HORIZONTAL MOUNT FLANGLESS SPRING CLOSED INTAKE BACKDRAFT DAMPER. HOOD SHALL BE LOW PROFILE WITH AN ARCHED HOOD PANEL HEAVY GAGE GALVANIZED STEEL WITH FACTORY APPLIED BAKED ENAMEL FINISH, COLOR SELECTED BY ARCHITECT, APPROX. FREE AREA 4.0 SQFT. PRESSURE DROP ACROSS HOOD SHALL BE LESS THAN 0.149 IN. W.G. ΔP. INSTALL WITH HEAVY GAGE ALUMINUM BIRDSCREEN AND STAINLESS STEEL INSECT SCREEN. ALUMINUM DAMPER BLADES SHALL START TO OPEN AT 0.014 IN. W.G. ΔP AND FULLY OPENED AT 0.12 IN. W.G. ΔP. DUCT INTAKE AIR PARALLEL WITH ROOF DECK DROP DOWN AT WALL TO FLOOR 24" x 24", 18 GAUGE SHEETMETAL LEAVE BOTTOM OF DUCT OPEN 24" A.F.F.
LD-1	MANUFACTURED BY GREENHECK ESJ-401 & EM-30 SIZE: 18 in. W x 18 in. H	FLANGELESS EXTRUDED ALUMINUM STATIONARY LOUVER AND VERTICAL MOUNT FLANGLESS EXHAUST BACKDRAFT DAMPER IN BUILDING EXTERIOR WALL. LOUVER SHALL BE HEAVY GAGE EXTRUDED WITH FACTORY APPLIED FINISH, COLOR SELECTED BY ARCHITECT, APPROX. FREE AREA 0.89 SQFT. INSTALL WITH EXPANDED ALUMINUM BIRDSCREEN AND STAINLESS STEEL INSECT SCREEN. COUNTERBALANCED DUCTED DAMPER BLADES SHALL START TO OPEN AT 0.01 IN. W.G. ΔP AND FULLY OPENED AT 0.055 IN. W.G. ΔP.
LD-2	MANUFACTURED BY GREENHECK ESJ-401 & EM-30 SIZE: 24 in. W x 24 in. H	FLANGELESS EXTRUDED ALUMINUM STATIONARY LOUVER AND VERTICAL MOUNT FLANGLESS EXHAUST BACKDRAFT DAMPER IN BUILDING EXTERIOR WALL. LOUVER SHALL BE HEAVY GAGE EXTRUDED WITH FACTORY APPLIED FINISH, COLOR SELECTED BY ARCHITECT, APPROX. FREE AREA 1.72 SQFT. INSTALL WITH EXPANDED ALUMINUM BIRDSCREEN AND STAINLESS STEEL INSECT SCREEN. COUNTERBALANCED DUCTED DAMPER BLADES SHALL START TO OPEN AT 0.01 IN. W.G. ΔP AND BE FULLY OPENED AT 0.055 IN. W.G. ΔP.
LD-3	MANUFACTURED BY GREENHECK ESJ-401 & BR-32 SIZE: 12 in. W x 12 in. H	FLANGED EXTRUDED ALUMINUM STATIONARY LOUVER AND VERTICAL MOUNT FLANGLESS EXHAUST BACKDRAFT DAMPER IN BUILDING EXTERIOR WALL. LOUVER SHALL BE HEAVY GAGE EXTRUDED WITH FACTORY APPLIED FINISH, COLOR SELECTED BY ARCHITECT, APPROX. FREE AREA 0.29 SQFT. INSTALL WITH EXPANDED ALUMINUM BIRDSCREEN AND STAINLESS STEEL INSECT SCREEN. COUNTERBALANCED DUCTED DAMPER BLADES SHALL START TO OPEN AT 0.05 IN. WG @ 150 FPM. MOUNT @ 7 FT. A.F.F.
L-1	MANUFACTURED BY GREENHECK ESJ-401 SIZE: 36 in. W x 48 in. H	FLANGELESS EXTRUDED ALUMINUM STATIONARY LOUVER AND VERTICAL MOUNT FLANGE ON EXTERIOR WALL. LOUVER SHALL BE HEAVY GAGE EXTRUDED WITH FACTORY APPLIED FINISH, COLOR SELECTED BY ARCHITECT, APPROX. FREE AREA 6. SQFT. INSTALL WITH EXPANDED ALUMINUM BIRDSCREEN AND STAINLESS STELL INSECT SCREEN.
L-WB1	MANUFACTURED BY GREENHECK ESD-202 SIZE: 12 in. W x 12 in. H	FLANGELESS EXTRUDED ALUMINUM STATIONARY LOUVER AND VERTICAL MOUNT FLANGE ON EXTERIOR WALL. LOUVER SHALL BE HEAVY GAGE EXTRUDED WITH FACTORY APPLIED FINISH, COLOR SELECTED BY ARCHITECT, APPROX. FREE AREA 0.23 SQFT. INSTALL WITH EXPANDED ALUMINUM BIRDSCREEN. SEE SHEET P2.3 FOR LOCATION.
L-WB2	MANUFACTURED BY GREENHECK ESD-202 SIZE: 18 in. W x 18 in. H	FLANGELESS EXTRUDED ALUMINUM STATIONARY LOUVER AND VERTICAL MOUNT FLANGE ON EXTERIOR WALL. LOUVER SHALL BE HEAVY GAGE EXTRUDED WITH FACTORY APPLIED FINISH, COLOR SELECTED BY ARCHITECT, APPROX. FREE AREA 0.67 SQFT. INSTALL WITH EXPANDED ALUMINUM BIRDSCREEN. PROVIDE AND INSTALL GRAINGER #4C560, MOTORIZED DAMPER, MOUNTED ON FIELD FABRICATED MOUNTING PLATE ON INSIDE OF DAMPER. SEE SHEET P2.3 FOR LOCATION.

Texas Department of Transportation
125 E. 11th Street
Austin, Texas 78701-2483
(512) 416-3000
Copyright © 2005 Texas Department of Transportation

THIS DOCUMENT IS RELEASED FOR THE PURPOSE OF
INFORMATION ONLY
NOT FOR REGULATORY
APPROVAL, PERMITTING,
OR CONSTRUCTION.

WACO AREA ENGINEER
AND MAINTENANCE FACILITY
WACO, MCLENNAN COUNTY
WACO DISTRICT

Revisions

Drawn by:
KCR
Project No.
CBC4704-00672
Date
05.21.2007
Sheet No.

M4.2
of 8 M sheets

NOTE: THIS DRAWING WAS CREATED FOR PRODUCTION ON 22" x 34" SHEET SIZE. DO NOT SCALE PRINTS.

CADFILE: T:\MNTF\MD25FTWO\SHC\0704-00-857\02-77-07\M00857\Acad\proto\plot pdf\hvac\Acad\MEP\MECH\M4_1_TO_M4_2.dwg Plotted: Fri, Aug. 07, 2009 @ 1:27 PM By: MBAZAN

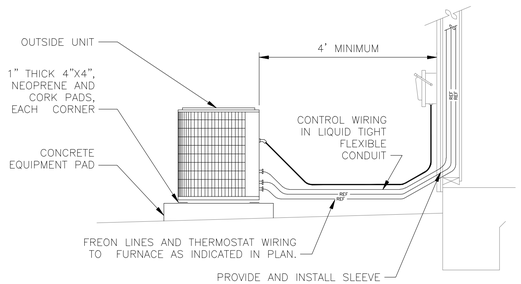

1 HEAT PUMP/CONDENSING UNIT REFRIGERANT LINES ABOVE GROUND
SCALE: NOT TO SCALE

2 DETAIL NOT USED
SCALE: NOT TO SCALE

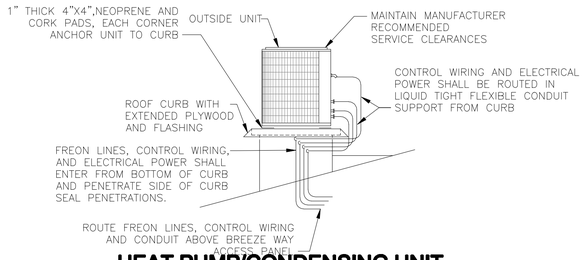

3 HEAT PUMP/CONDENSING UNIT INSTALLED ON ROOF CURB
SCALE: NOT TO SCALE

4 DETAIL NOT USED
SCALE: NOT TO SCALE

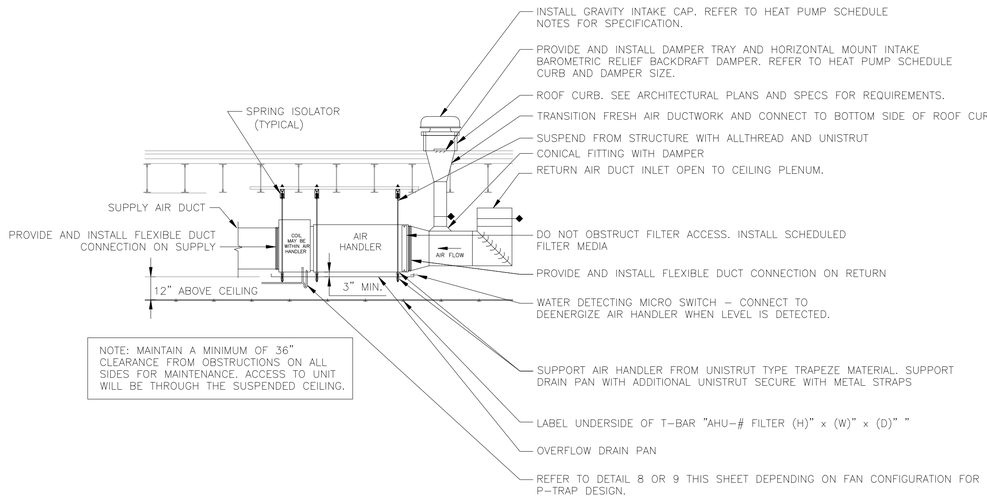

5 HORIZONTAL AIR HANDLER SUSPENDED ABOVE CEILING FREE RETURN SYSTEM
SCALE: NOT TO SCALE

6 DETAIL NOT USED
SCALE: NOT TO SCALE

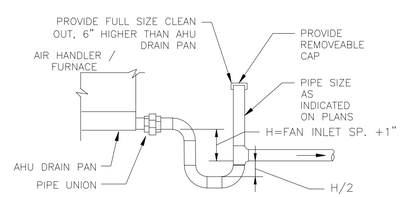

NOTE: PIPING SHOWN WITHOUT INSULATION FOR CLARITY. INSTALL INSULATION AS SPECIFIED.

8 CONDENSATE P-TRAP (DRAW-THRU AIR HANDLER)
SCALE: NOT TO SCALE

7 DETAIL NOT USED
SCALE: NOT TO SCALE

9 DETAIL NOT USED
SCALE: NOT TO SCALE

10 DETAIL NOT USED
SCALE: NOT TO SCALE

MECHANICAL DETAILS - 1

NOTE: THIS DRAWING WAS CREATED FOR PRODUCTION ON 22" x 34" SHEET SIZE. DO NOT SCALE PRINTS.

Texas Department of Transportation
125 E. 11th Street
Austin, Texas 78701-2483
(512) 416-3000

Copyright © 2005 Texas Department of Transportation

THIS DOCUMENT IS RELEASED FOR THE PURPOSE OF
INFORMATION ONLY
NOT FOR REGULATORY
APPROVAL, PERMITTING,
OR CONSTRUCTION.

WACO AREA ENGINEER
AND MAINTENANCE FACILITY
WACO, MCLENNAN COUNTY
WACO DISTRICT

Revisions

Drawn by: KCR
Project No. CBC4704-00672
Date 05.21.2007
Sheet No.

M5.1
of 8 M sheets

CADFILE: T:\AUTH\DOS\TWC\CBC4704-00-65\102-77-4704006570\Acad\proto\dgn\pal pal\twaco\Acad\MEP\MEC\HMS_1.dwg Plotted: Fri, Aug. 07, 2009 @ 1:37 PM By: MBAZAN

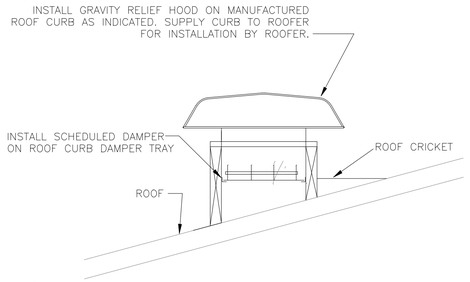

1 ROOF MOUNTED GRAVITY RELIEF HOOD
SCALE: NOT TO SCALE

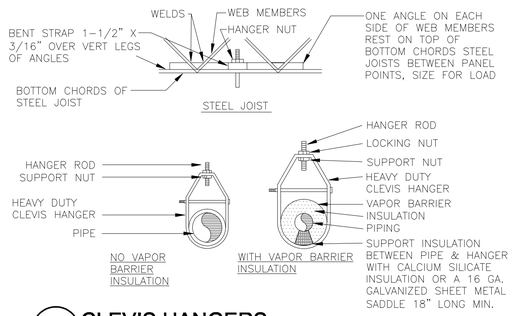

2 CLEVIS HANGERS
SCALE: NOT TO SCALE

3 DETAIL NOT USED
SCALE: NOT TO SCALE

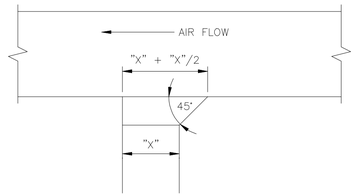

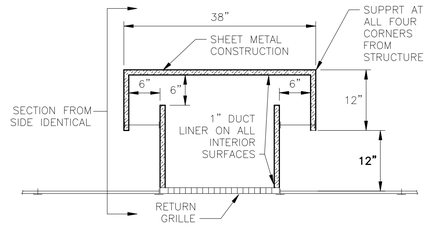

RETURN GRILLE SOUND BOX (SECTION CUT)
SCALE: NOT TO SCALE

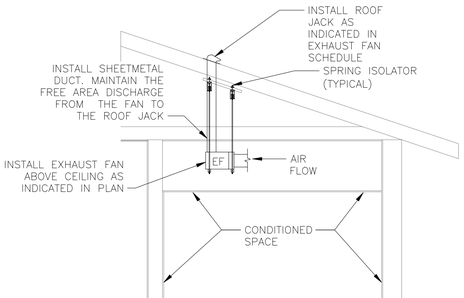

7 INLINE CABINET EXHAUST FAN
SCALE: NOT TO SCALE

4 DETAIL NOT USED
SCALE: NOT TO SCALE

5 RECTANGULAR DUCT BOOT TAP
SCALE: NOT TO SCALE

6 DETAIL NOT USED
SCALE: NOT TO SCALE

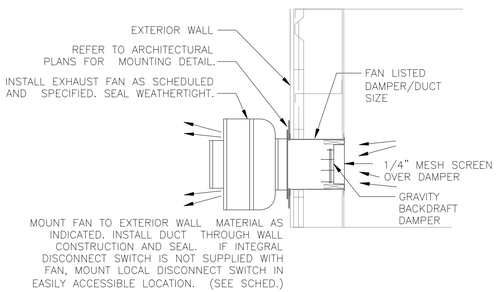

8 SIDEWALL EXHAUST FAN
SCALE: NOT TO SCALE

9 DETAIL NOT USED
SCALE: NOT TO SCALE

10 DETAIL NOT USED
SCALE: NOT TO SCALE

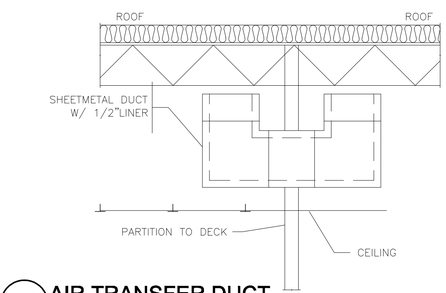

11 AIR TRANSFER DUCT
SCALE: NOT TO SCALE

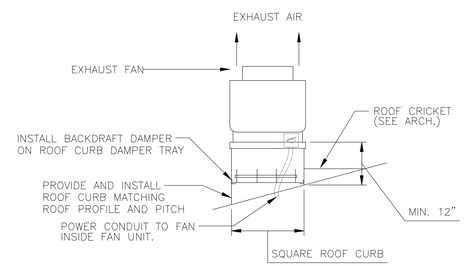

12 ROOF MOUNTED UPBLAST EXHAUST FAN
SCALE: NOT TO SCALE

13 DETAIL NOT USED
SCALE: NOT TO SCALE

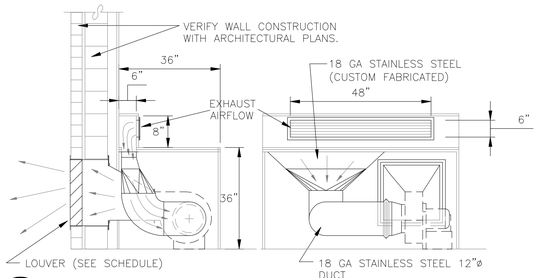

14 COUNTER TOP EXHAUST FAN
SCALE: NOT TO SCALE

15 DETAIL NOT USED
SCALE: NOT TO SCALE

MECHANICAL DETAILS - 2

NOTE: THIS DRAWING WAS CREATED FOR PRODUCTION ON 22" x 34" SHEET SIZE. DO NOT SCALE PRINTS.

Texas Department of Transportation
125 E. 11th Street
Austin, Texas 78701-2483
(512) 416-3000

Copyright © 2005 Texas Department of Transportation

THIS DOCUMENT IS RELEASED FOR THE PURPOSE OF
INFORMATION ONLY
NOT FOR REGULATORY
APPROVAL, PERMITTING,
OR CONSTRUCTION.

WACO AREA ENGINEER AND MAINTENANCE FACILITY
WACO, MCLENNAN COUNTY
WACO DISTRICT

Revisions

Drawn by: KCR
Project No. CBC4704-00672
Date 05.21.2007
Sheet No.

M5.2
of 8 M sheets

CADFILE: T:\MNTFM\DGN\TWC\CBC4704-00-05\102-77-4704005STA\cad\pwd\dgn\pal pal\texas\Acad\MEP\MECH\M5_2.dwg Plotted: Fri, Aug. 07, 2009 @ 1:35 PM By: MBAZAN

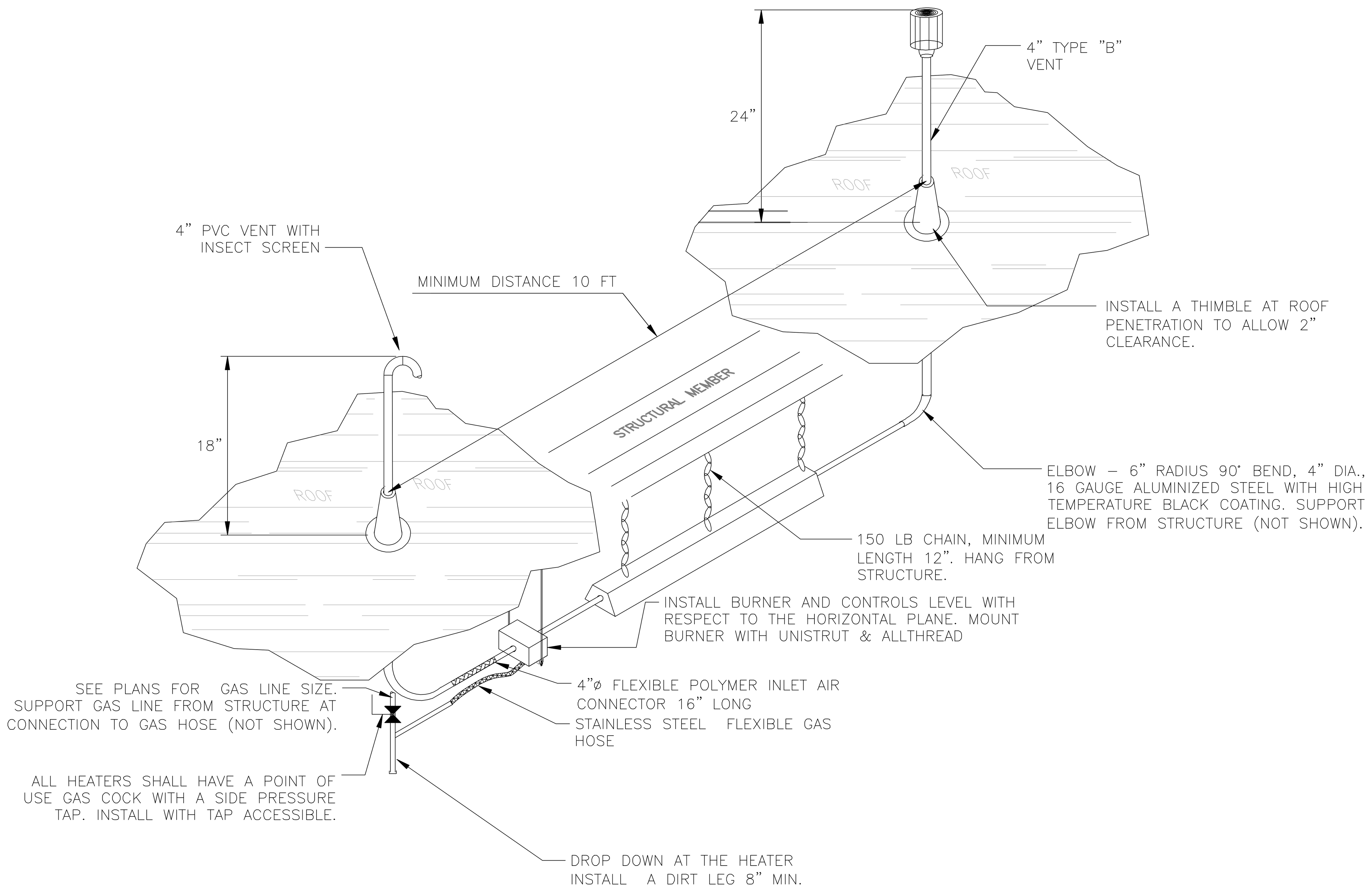

(1) **INFRARED TUBE HEATER**
SINGLE VENTING
SCALE: NOT TO SCALE

(2) DETAIL NOT USED
SCALE: NOT TO SCALE

(3) DETAIL NOT USED
SCALE: NOT TO SCALE

(4) DETAIL NOT USED
SCALE: NOT TO SCALE

(5) DETAIL NOT USED
SCALE: NOT TO SCALE

(6) DETAIL NOT USED
SCALE: NOT TO SCALE

MECHANICAL DETAILS - 3

NOTE: THIS DRAWING WAS CREATED FOR PRODUCTION ON 22" x 34" SHEET SIZE. DO NOT SCALE PRINTS.

CADFILE: T:MNTFMD02FTWCBC4704-00-637\02-77-470400637\Acad\prototypical pdfs\waco\Acad\MEP\MECH\M5_3.dwg Plotted: Fri. Aug. 07, 2009 @ 1:38 PM By: MBAZAN

Texas Department of Transportation
125 E. 11th Street
Austin, Texas 78701-2483
(512) 416-3048

Copyright © 2005 Texas Department of Transportation

THIS DOCUMENT IS RELEASED FOR THE PURPOSE OF INFORMATION ONLY
NOT FOR REGULATORY APPROVAL, PERMITTING, OR CONSTRUCTION.

WACO AREA ENGINEER AND MAINTENANCE FACILITY
WACO, MCLENNAN COUNTY
WACO DISTRICT

Revisions

Drawn by: KCR
Project No. CBC4704-00672
Date 05.21.2007
Sheet No.
M5.3
of 8 M sheets

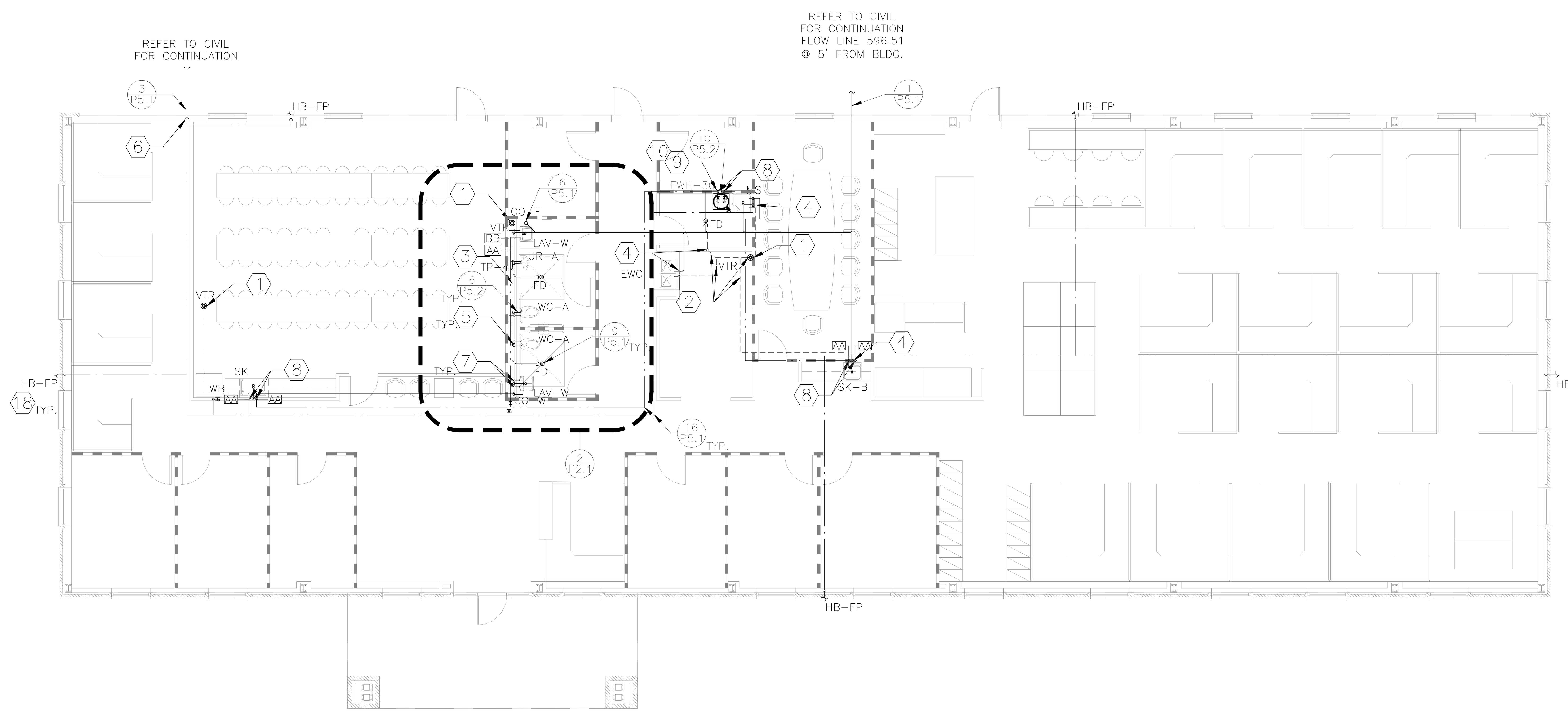

1 PLUMBING FLOOR PLAN - OFFICE BUILDING

SCALE: 1/8" = 1'-0"

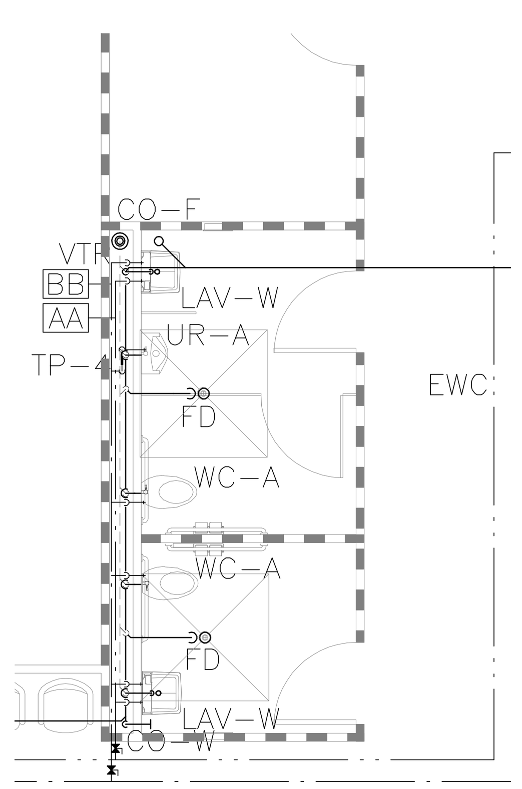

2 ENLARGED RESTROOM DETAIL

SCALE: 1/4" = 1'-0"

KEYED NOTES -

1. EXTEND SANITARY VENT THROUGH ROOF LINE AT LEAST 12" MAINTAINING AT LEAST 10FT FROM ANY OPENING IN BUILDING.
2. MANIFOLD VENTS TOGETHER SLOPE AWAY FROM VENT THROUGH ROOF.
3. SANITARY VENT UP INSIDE CHASE, MANIFOLD VENTS TOGETHER SLOPE AWAY FROM VENT THROUGH ROOF.
4. SANITARY VENT UP INSIDE WALL, ROUTE ABOVE CEILING.
5. WASTE DOWN THROUGH SLAB, COORDINATE WITH STRUCTURAL TO CLEAR GRADE BEAMS.
6. BUILDING DOMESTIC WATER SUPPLY, ROUTE UNDER SLAB AND STUB UP IN EXTERIOR WALL TO ABOVE CEILING.
7. PIPE WATER DOWN INSIDE CHASE, ROUTED FROM ABOVE CEILING.
8. PIPE WATER DOWN INSIDE WALL, ROUTED FROM ABOVE CEILING.
9. PROVIDE AND INSTALL WATER HEATER DRAIN PAN WITH 1"ø TYPE "K" COPPER HARD DRAWN DRAIN FROM PAN TO MOP SINK ELBOW IN THE DOWN POSITION.
10. PROVIDE AND INSTALL WATER HEATER T&P VALVE WITH 1"ø TYPE "K" COPPER HARD DRAWN RELIEF DRAIN FROM VALVE TO MOP SINK ELBOW IN THE DOWN POSITION.
11. GAS LINE SHALL RUN UNDERGROUND UP TO THE BUILDING. CONTRACTOR SHALL INSTALL AND PROVIDE A TRANSITION GAS RISER, GAS PLUG COCK VALVE AND UNION. INSTALL VALVE 24" AFG AT THE TOP OF THE GAS RISER IN THE HORIZONTAL POSITION. RUN GAS LINE THROUGH EXTERIOR WALL AND INTO THE BUILDING. PROVIDE LEAK SEAL TO ENSURE A WEATHER TIGHT PENETRATION. PIPE UP AND ROUTE INSIDE BUILDING JUST BELOW BOTTOM OF THE ROOF PERLINS DROP DOWN TO EACH HEATER.
12. PIPE DOWN EXPOSED. INSTALL ANCHORS TO SUPPORT PIPE AND HOSE BIBB TO WALL, INSTALL A 3/4" HOSE BIBB ON INSIDE WALL, 18" A.F.F.
13. PROVIDE A VERTICAL DROP AND DIRT LEG AT EACH HEATER. REFER TO HEATER DETAILS.
14. PROVIDE AND INSTALL AN ACCESSIBLE LOCKING BALL VALVE, LOCKED IN THE OPEN POSITION.
15. PROVIDE AND INSTALL AN ADDITIONAL QUICK DISCONNECT TO AIR DROP WITH AN ADDITIONAL QUICK DISCONNECT TO THE EXTERIOR OF THE BUILDING.
16. ALL PIPING IN OPEN BAYS, PIPE UP, ROUTE INSIDE BUILDING JUST BELOW BOTTOM OF ROOF DECKING.
17. FIRE CHALK ALL PENETRATIONS IN FIRE WALL. (SEE GENERAL NOTES).
18. FROST PROOF WALL HYDRANT SHALL FIT WITHIN WALL COORDINATE WITH ARCHITECTURAL DRAWINGS.
19. PROVIDE 24 x 24 ACCESS PANEL. REFER TO ARCHITECTURAL SPECIFICATIONS.
20. MAKE SURE FLOOR DRAIN IS CLEAR OF GRADE BEAMS DURING INSTALLATION.

0' 2' 4' 8' 16'

SYMBOL SCHEDULE

Symbol	Description
	SANITARY WASTE PIPING
	SANITARY VENT PIPING
	COLD WATER PIPING
	HOT WATER SUPPLY
	HOT WATER RETURN
HHW	HEATING HOT WATER SUPPLY
HHR	HEATING HOT WATER RETURN
CHS	CHILLED WATER SUPPLY
CHR	CHILLED WATER RETURN
NG	NATURAL GAS PIPING
LPG	LIQUID PETROLEUM GAS
CND	CONDENSATE DRAIN LINES
REF	REFRIGERANT PIPING
CA	COMPRESSED AIR PIPING
OIL	LUBRICANT PIPING
GR	GREASE PIPING
	HOSE BIBB
AA	WATER HAMMER ARRESTOR
	TEMP & PRESSURE VALVE
	BACKFLOW PREVENTER
	CHECK VALVE
CHR	CONTROL VALVE
NG	PRESURE REDUCING VALVE
	PIPE DROP
	PIPE RISER
	P-TRAP
	VALVE IN VALVE BOX
CHR	GATE VALVE
	BALL VALVE
VTR	VENT THRU ROOF
NG	TRENCH UNDER PAVEMENT INSTALL WITH SLEEVE

APPLIES TO ALL P-SHEETS

GENERAL NOTES

1. NOTE THAT CONSTRUCTION DRAWINGS ARE DIAGRAMMATIC BY THEIR NATURE, AND ARE NOT INTENDED TO SHOW EVERY CONNECTION IN DETAIL OR EVERY PIPE OR CONDUIT IN ITS EXACT LOCATION. FEATURES AND COMPONENTS NOT SHOWN ARE SUBJECT TO THE REQUIREMENTS OF STANDARDS REFERENCED ELSEWHERE IN THE CONSTRUCTION DOCUMENTS. THE CONTRACTOR SHALL COORDINATE THE VARIOUS TRADES IN ORDER TO AVOID INTERFERENCE BETWEEN THE VARIOUS SEGMENTS OF THE PROJECT. CONTRACTOR SHALL VERIFY ALL CRITICAL BUILDING DIMENSIONS FROM THE ARCHITECTURAL AND STRUCTURAL DRAWINGS.
2. ALL WORK SHALL BE INSTALLED PARALLEL OR PERPENDICULAR TO THE BUILDING LINES UNLESS NOTED OTHERWISE.
3. ALL COLD AND HOT WATER PIPING ABOVE SLAB SHALL BE HARD DRAWN TYPE "K" COPPER.
4. ALL COLD AND HOT WATER PIPING UNDER SLAB SHALL BE SOFT DRAWN TYPE "K" COPPER. MINIMIZE JOINT CONNECTIONS UNDER SLAB
5. COPPER SWEAT CONNECTIONS SHALL BE USED IN THE ASSEMBLY OF COPPER PIPING. USE ONLY SILVER OR ANTIMONY SOLDER, LEAD IS PROHIBITED.
6. USE DIELECTRIC UNIONS AT ALL CONNECTIONS BETWEEN COPPER AND GALVANIZED, IRON, OR STEEL PIPING.
7. USE DIELECTRIC UNIONS ON WATER HEATER CONNECTIONS. BOND HOT WATER AND COLD WATER PIPING WITH No. 8 AMERICAN WIRE GAUGE COPPER WIRE AND COPPER PIPE CLAMPS TO MAINTAIN GROUNDING ON HOT WATER PIPING. INSTALL AND PROVIDE FLEXIBLE CORRUGATED COPPER CONNECTORS PLACE LOOP IN CONNECTOR MAXIMUM TOTAL LENGTH 24".
8. ALL WATER PIPING SHALL SLOPE A MINIMUM OF 1/8" PER FOOT (1%) TO DRAIN TO ALL FIXTURES, HOSE BIBBS AND HOT WATER HEATERS TO ALLOW FOR WINTERIZATION.
9. ALL WASTE PIPING UNDER SLAB AND UP TO 5 FEET OUTSIDE THE BUILDING SHALL BE SERVICE WEIGHT CAST IRON BELL AND SPIGOT LABELED ASTM-74.
10. ALL WASTE AND VENT PIPING ABOVESLAB SHALL BE NO-HUB CAST IRON LABELED ASTM-888.
11. ALL HORIZONTAL WASTE AND VENT PIPING SHALL SLOPE 1/4" PER FOOT (2%), TOWARD THE DIRECTION OF WASTE FLOW.
12. PROVIDE SLEEVES FOR ALL GRADE BEAM PENETRATIONS. REFER TO STRUCTURAL DRAWINGS FOR GRADE BEAM PENETRATION REQUIREMENTS.
13. ALL FLOOR DRAINS SHALL BE FITTED WITH A TRAP PRIMER ACTIVATED BY A SURGE IN PRESSURE. RUN 1/2" COPPER TUBING FROM FLOOR DRAIN TO THE NEAREST AVAILABLE TRAP PRIMER DISTRIBUTION UNIT. INSTALL IN-LINE TRAP PRIMERS IN ADJACENT WATER SUPPLY FLUSH VALVE LINES AS INDICATED IN RISER DIAGRAMS.
14. ALL EXPOSED PIPING UNDER LAVATORIES SHALL BE INSULATED WITH SPECIFIED INSULATION.
15. INSULATION FOR COLD WATER PIPING STARTS AT THE BOTTOM OF THE SLAB PENETRATION. INSULATE ALL HOT WATER PIPING. (SEE SPECIFICATIONS).
16. ROOF CONTRACTOR SHALL INSTALL ALL ROOF PENETRATIONS IN THE APPROXIMATE LOCATIONS SHOWN IN PLANS. NOTE ALL ROOF PENETRATIONS ON THE OFFICE BUILDING SHALL BE LOCATED ON THE BACKSIDE OF RIDGE CAP. ALL ROOF PENETRATIONS SHALL BE INSTALLED PER ARCHITECTURAL DRAWINGS AND SPECIFICATIONS.
17. SUPPORT ALL ABOVE GRADE PIPING ON 6 FOOT CENTERS. USE UNISTRUT AND BRACES/TRAPEZES MADE OF UNISTRUT OR PER MANUFACTURER RECOMMENDATIONS.
18. CONTRACTOR IS RESPONSIBLE FOR COORDINATING, FILLING AND PAYING FOR ALL ASSOCIATED FEES AND PERMITS AS PART OF THIS BID PACKAGE.
19. SLEEVE ALL SLAB PENETRATIONS WITH SCHEDULE 40 PVC. SLEEVE SHALL BE 2 PIPE SIZES LARGER THAN PENETRATING PIPE. MAINTAIN INSULATION THROUGH SLEEVES.
20. SLEEVE ALL WALL PENETRATIONS WITH SLEEVE 2 PIPE SIZES LARGER THAN PENETRATING PIPE. SLEEVE AND PENETRATING PIPE SHALL BE CONSTRUCTED FROM THE SAME MATERIAL. MAINTAIN INSULATION THROUGH SLEEVES.
21. ALL EXTERIOR, SLAB AND CONDITIONED TO NON-CONDITIONED PENETRATIONS, PACK ANNULAR SPACE WITH MINERAL WOOL. SEAL EACH EXTERIOR END AND TOP END OF SLAB PENETRATION WITH SEALANT (SEE ARCHITECTURAL SPECIFICATIONS).
22. FIRE CHAULK ALL PENETRATIONS WHERE ARCHITECTURAL PLANS CALL FOR FIRE RATED CONSTRUCTION WALLS. STOP INSULATION SHORT OF SLEEVE FILL ANNULAR SPACES WITH FIRE RATED CHAULK.
23. ALL SANITARY DRAINAGE, VENT PIPING, FUEL PIPING, HOT AND COLD WATER SHALL BE PRESSURE TESTED BY THE CONTRACTOR AT WHICH TIME THE OWNER'S REPRESENTITIVE SHALL WITNESS THE PRESSURE TEST. REFERENCE THE SPECIFICATIONS FOR FURTHER REQUIREMENTS.

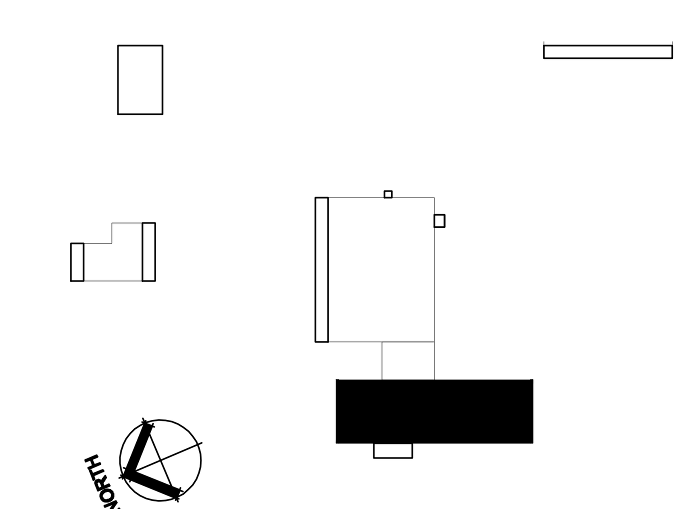

KEY PLAN

PLUMBING PLAN - OFFICE BUILDING

NOTE: THIS DRAWING WAS CREATED FOR PRODUCTION ON 22" x 34" SHEET SIZE. DO NOT SCALE PRINTS.

Texas Department of Transportation
125 E. 11th Street
Austin, Texas 78701-2483
(512) 416-3046

Copyright © 2005 Texas Department of Transportation

THIS DOCUMENT IS RELEASED FOR THE PURPOSE OF INFORMATION ONLY
NOT FOR REGULATORY APPROVAL, PERMITTING, OR CONSTRUCTION.

WACO AREA ENGINEER AND MAINTENANCE FACILITY

WACO, MCLENNAN COUNTY WACO DISTRICT

Revisions

Drawn by: KCR

Project No. CBC4704-00672

Date 05.21.2007

Sheet No.

P2.1

of 9P sheets

Plotted: Fri, Aug. 07, 2009 @ 1:28 PM By: MBAZAN

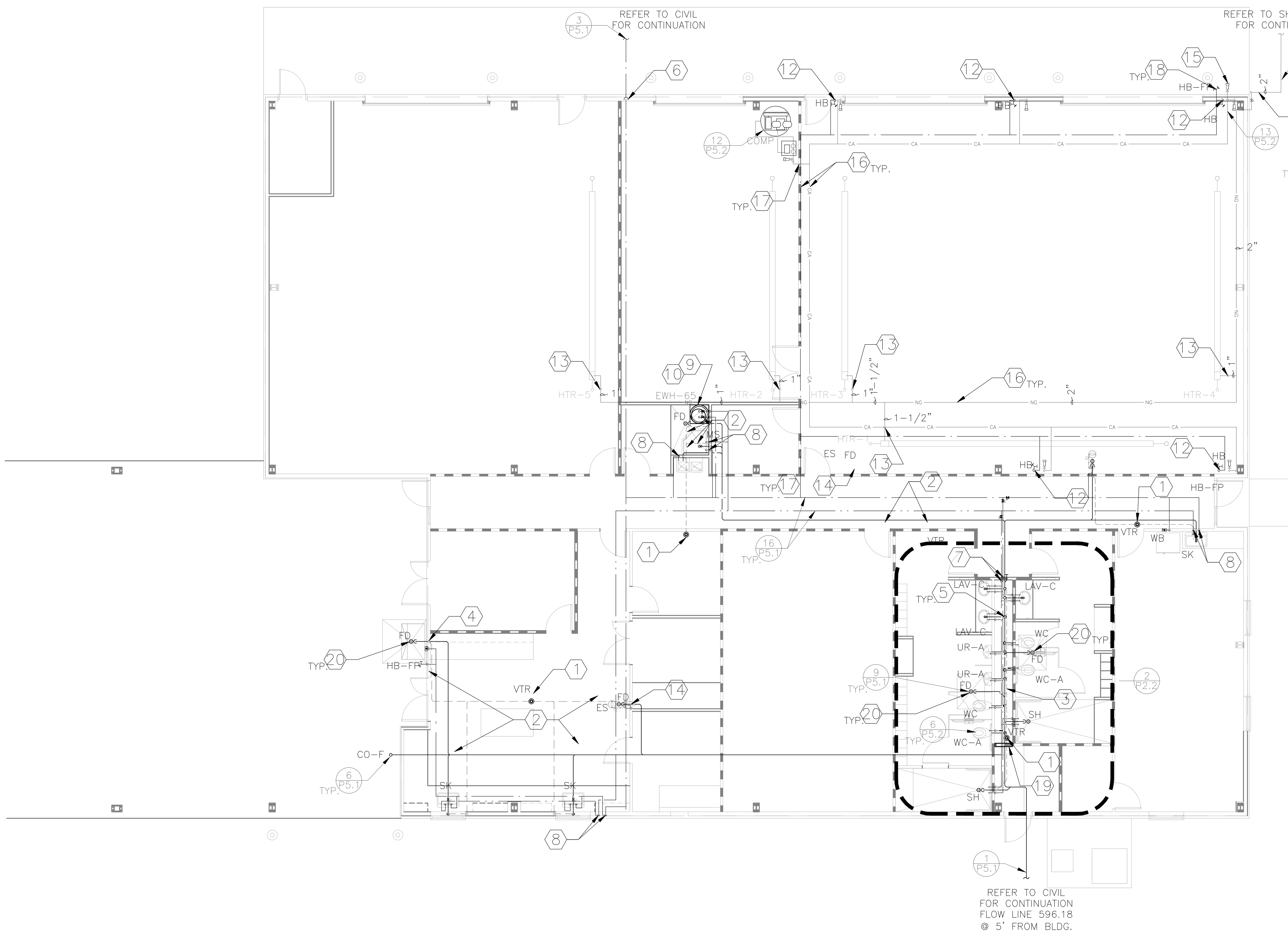

1 PLUMBING FLOOR PLAN - LAB/SHOP BUILDING
SCALE: 1/8" = 1'-0"

APPLIES TO ALL FUEL GAS PIPING

GENERAL NOTES

1. NOTE THAT CONSTRUCTION DRAWINGS ARE DIAGRAMMATIC BY THEIR NATURE, AND ARE NOT INTENDED TO SHOW EVERY CONNECTION IN DETAIL OR EVERY PIPE OR CONDUIT IN ITS EXACT LOCATION. FEATURES AND COMPONENTS NOT SHOWN ARE SUBJECT TO THE REQUIREMENTS OF STANDARDS REFERENCED ELSEWHERE IN THE CONSTRUCTION DOCUMENTS. THE CONTRACTOR SHALL COORDINATE THE VARIOUS TRADES IN ORDER TO AVOID INTERFERENCE BETWEEN THE VARIOUS SEGMENTS OF THE PROJECT. CONTRACTOR SHALL VERIFY ALL CRITICAL BUILDING DIMENSIONS FROM THE ARCHITECTURAL AND STRUCTURAL DRAWINGS.
2. ALL FUEL GAS PIPING SHALL BE INSTALLED PARALLEL OR PERPENDICULAR TO THE BUILDING LINES UNLESS NOTED OTHERWISE ALL CONNECTIONS SHALL BE MADE AT THE TOP OR SIDE OF FUEL GAS PIPING. CONNECTIONS TO THE BOTTOM SIDE OF GAS PIPING ARE NOT ACCEPTABLE.
3. ALL FUEL GAS PIPING UP TO 2" SHALL BE SCHEDULE 40 BLACK STEEL, THREADED WITH NPT PIPE THREADS. ALL JOINTS SHALL BE SEALED WITH TEFLON BASED PIPE DOPE MATERIAL AND TELFLON TAPE, INSOLUBLE IN THE PRESENCE OF GAS. ALL NATURAL GAS PIPING ABOVE 2" SHALL BE BLACK STEEL WITH WELDED FITTINGS. ALL WELDED JOINTS SHALL BE MADE BY A CERTIFIED PIPE WELDER AS DEFINED IN THE LATEST EDITION OF THE UNIFORM PLUMBING CODE.
4. SUPPORT ALL PIPING ON 6' CENTERS. USE UNISTRUT AND BRACES/TRAPEZES MADE OF UNISTRUT OR PER MANUFACTURER RECOMMENDATIONS.
5. PRESSURE TEST (DOWNSTREAM OF SERVICE REGULATOR) SHALL BE PERFORMED BY CONTRACTOR BEFORE INTRODUCING FUEL GAS TO THE SYSTEM AT WHICH TIME THE OWNER'S REPRESENTITIVE SHALL WITNESS THE TEST. CONTRACTOR SHALL ISOLATE ALL PRESSURE REGULATORS DURING LEAK TEST AND FIX ALL LEAKS. REFERENCE THE SPECIFICATIONS FOR ADDITIONAL REQUIREMENTS.
6. CONTRACTOR SHALL MEET THE MANUFACTURER'S RECOMMENDED INLET PRESSURE ON ALL RADIANT HEATERS TO ACHIEVE A FULLY FUNCTIONAL HEATING SYSTEM.
7. TAG ALL FUEL GAS PRESSURE REGULATORS SHOWING OPERATING PRESSURE IN INCHES OF WATER COLUMN AND LABELED NATURAL GAS.
8. CONTRACTOR SHALL INSTALL A UNION AND A FUEL GAS PLUG VALVE AT EVERY BUILDING ENTRY.
9. FUEL GAS PIPING INSTALLED BELOW GRADE SHALL BE EFFECTIVELY SUPPORTED AT ALL POINTS ON UNDISTURBED OR WELL COMPACTED SAND (SEE DETAILS).
10. ALL PROTECTIVELY COATED UNDERGROUND FUEL GAS PIPING SHALL BE INSPECTED BY OWNER'S REPRESENTATIVE FOR DAMAGE AND OR IMPERFECTIONS TO THE PIPE COATING. CONTRACTOR SHALL REPAIR NOTED AREAS AND HOLIDAYS PRIOR TO BACKFILLING TRENCH.
11. CONTRACTOR SHALL INSTALL A SLEEVE WHEN FUEL GAS PIPING PASSES UNDER PAVEMENT AND/OR CONCRETE. THE INSTALLED SLEEVE SHALL BE A MINIMUM OF TWO SIZES LARGER THAN THE SLEEVED GAS PIPING, THE SLEEVE SHALL BE SCHEDULE 80 PVC, OR C-900 PVC.
12. ALL UNDERGROUND FUEL GAS SUPPLY PIPING SHALL BE POLYMER COATED BLACK PIPE SCHEDULE 40. GAS PIPING INSTALLED UNDERGROUND IN EXTERIOR LOCATIONS SHALL BE PROTECTED FROM CORROSION BY APPROVED COATINGS MACHINE APPLIED AS SPECIFIED. FIELD WRAPPING SHALL BE INSTALLED AT JOINTS AND AREAS WHERE COATINGS HAVE BEEN DAMAGED OR INTERRUPTED.
13. ALL FUEL GAS PIPING SHALL BE PAINTED "SAFETY YELLOW".

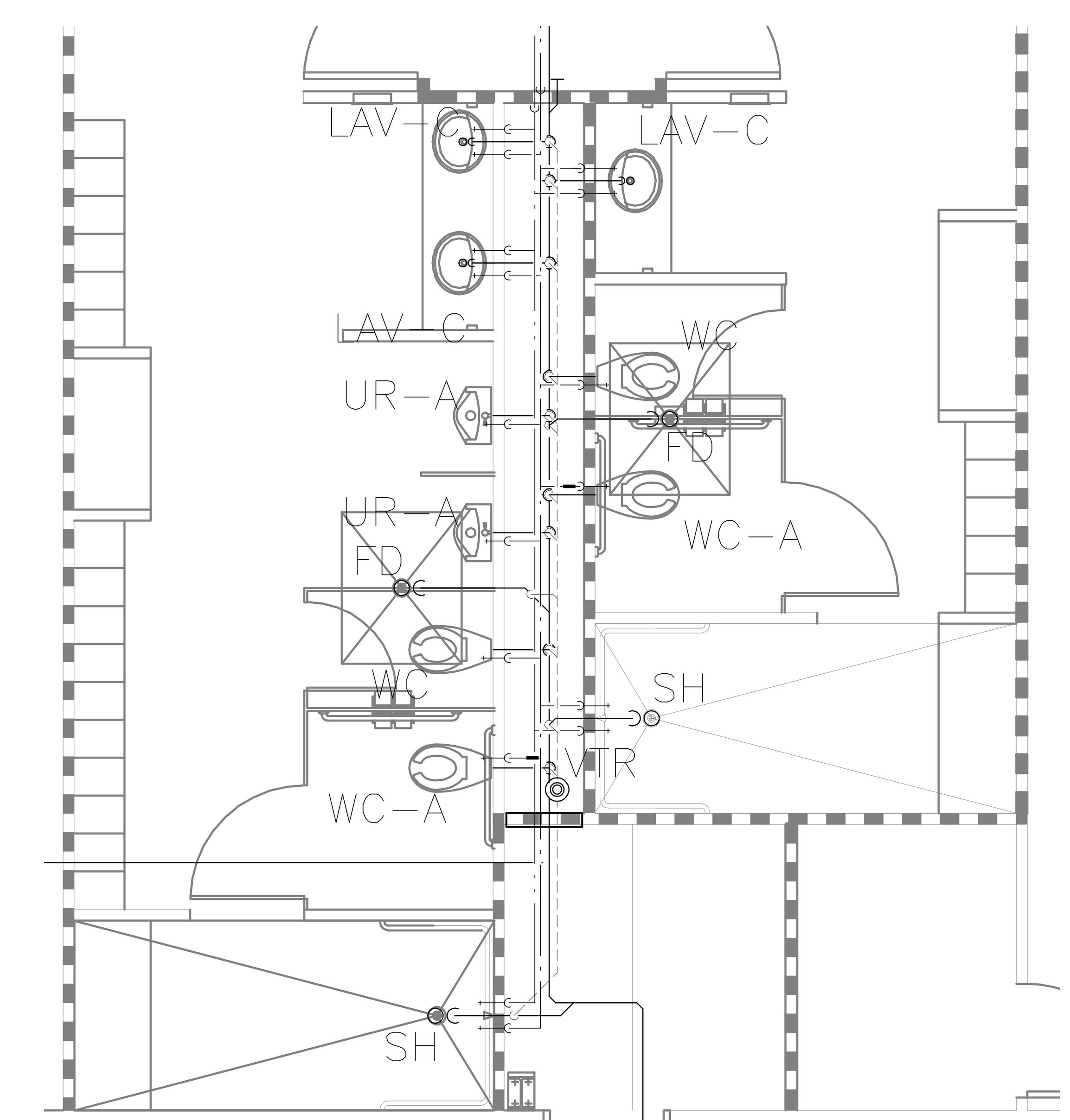

2 ENLARGED RESTROOM DETAIL
SCALE: 1/4" = 1'-0"

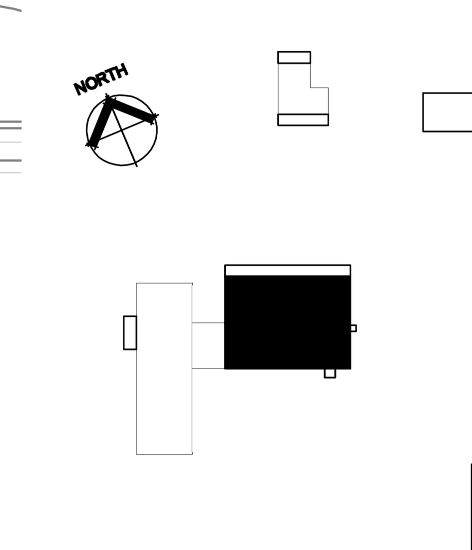

KEY PLAN

SEE P2.1 FOR PLUMBING
GENERAL & KEYED NOTES

PLUMBING PLAN - LAB/SHOP BUILDING

NOTE: THIS DRAWING WAS CREATED FOR PRODUCTION ON 22" x 34" SHEET SIZE. DO NOT SCALE PRINTS.

Texas Department of Transportation
125 E. 11th Street
Austin, Texas 78701-2483
(512) 416-3046
Copyright © 2005 Texas Department of Transportation

THIS DOCUMENT IS RELEASED FOR THE PURPOSE OF INFORMATION ONLY
NOT FOR REGULATORY APPROVAL, PERMITTING, OR CONSTRUCTION.

WACO AREA ENGINEER AND MAINTENANCE FACILITY
WACO, MCLENNAN COUNTY
WACO DISTRICT

Revisions

Drawn by: KCR
Project No. CBC4704-00672
Date 05.21.2007
Sheet No. P2.2
of 9P sheets

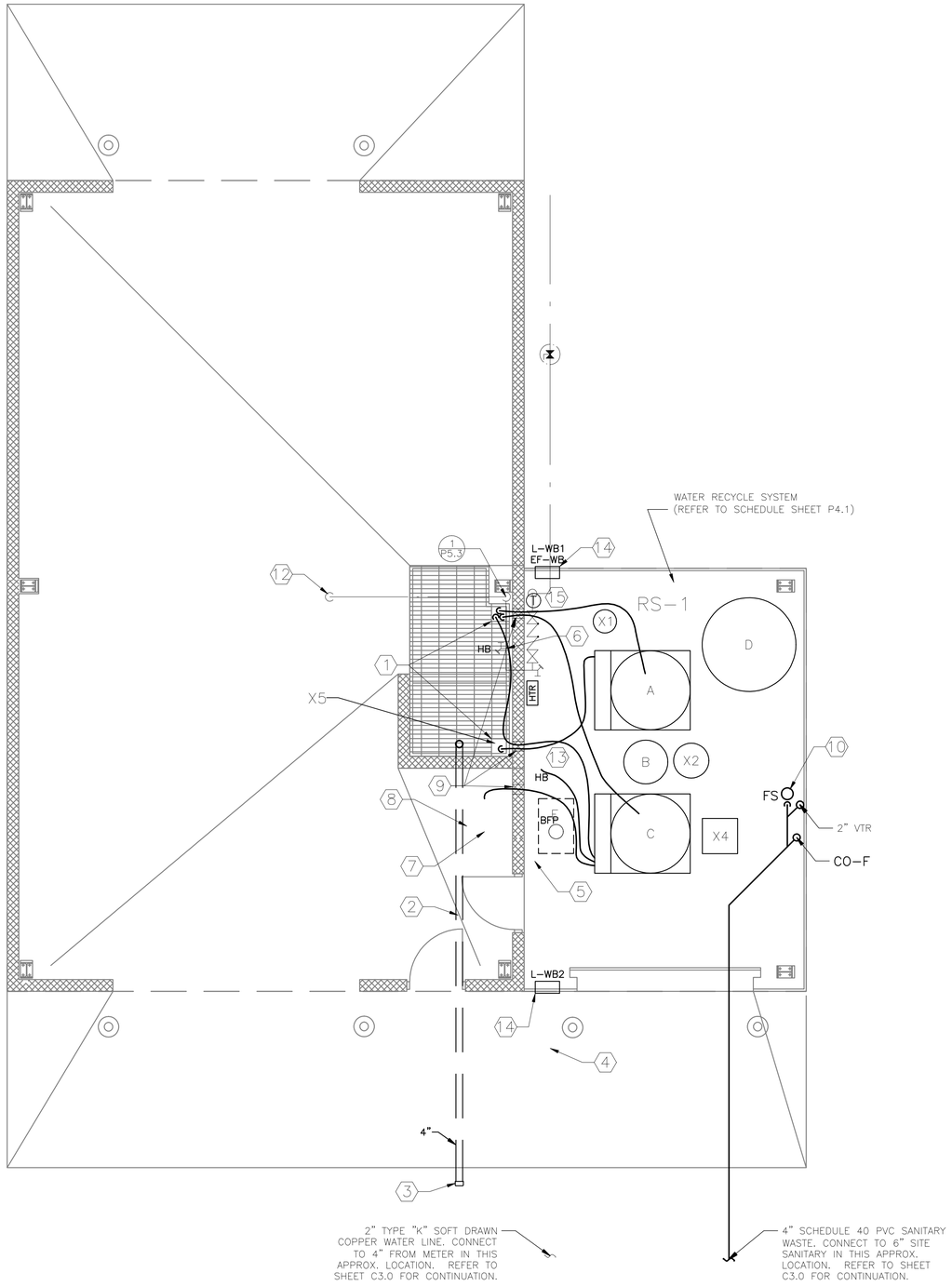

1 PLUMBING PLAN - WASH BAY
SCALE: 1/4" = 1'-0"

0' 1' 2' 4' 8'

KEYED NOTES "⬡"
THIS SHEET ONLY

1. PROVIDE BANDED CUT IN CORNER OF GRATE.
2. INSTALL 4" PVC DRAIN FOR FUTURE USE. SLOPE 1/4" PER FOOT AWAY FROM SUMP. PENETRATE GRADE BEAM WITH 6" PVC SLEEVE AND INSTALL DRAIN WITHIN SLEEVE. SEE STRUCTURAL FOR ADDITIONAL INFORMATION.
3. CAP PIPE 24" FROM CONCRETE, AND MARK WITH A 24" LONG, TREATED 2 X 4, PROJECTING FROM THE GROUND 2".
4. SOFT DRAWN 2" TYPE "K" COPPER PIPE. INSTALL BURIED MINIMUM OF 24". DO NOT PENETRATE GRADE BEAMS.
5. STUB UP THRU SLAB RIGID, HARD DRAWN 2" TYPE "K" COPPER PIPING THRU WALL FOR TRUCK FILL POST. INSTALL 3/4" HOSE BIBBS ON BOTH SIDES OF WALL. FASTEN TO WALL FOR SUPPORT USING 2", 20 GA. GALVANIZED STEEL STRAPS MOUNTED TO WALL WITH WATERPROOF CONNECTIONS.
6. SECURE HOSE BIBBS TO ADJACENT CONSTRUCTION.
7. PROVIDE DRAFT DAMPER IF RECOMMENDED BY MANUFACTURER. EXTEND 8" TYPE "B" VENT FROM PRESSURE WASHER TO MINIMUM 24" ABOVE ROOF OF WASHBAY. TRANSITION AS NECESSARY FROM PRESSURE WASHER. PROVIDE A MINIMUM OF TWO INTERMEDIATE SUPPORTS ON VENT STACK WITHIN WASHBAY AND WEATHERPROOF VENT CAP. INSTALL AS RECOMMENDED BY MANUFACTURER.
8. PRESSURE WASHER – SEE SCHEDULE AND SPECS. REMOVE WHEELS FROM PRESSURE WASHER AND ANCHOR TO SLAB USING BOLTS AND LEAD INSERTS.
9. 6" PVC SLEEVES IN WALL INSTALLED UNDER ARCHITECTURAL. SEE SHEET A2.4.
10. INSTALL SCHEDULED FLOORSINK WITH TRAP. INSTALL 4" SCHED. 40 PVC WITH 1/8" PER FOOT SLOPE. PENETRATE GRADE BEAMS IN MIDDLE 1/3 OF BEAM WITH 6" PVC SLEEVE. CENTER PIPE WITHIN SLEEVE.
11. NOT USED.
12. INSTALL TRUCK FILL POST. REFER TO DETAIL 1/P5.3.
13. MARK ALL PIPING AS NON-POTABLE WATER.
14. REFER TO MECHANICAL EQUIPMENT SCHEDULES FOR INFORMATION. MOUNT FAN AND LOUVER WITHIN 12" OF UNDERSIDE OF ROOF.
15. MOUNT THERMOSTAT (SEE EXHAUST FAN SCHEDULE) AT 48" A.F.F. THERMOSTAT SHALL CONTROL EF-WB AND L-WB MOTORIZED DAMPER.

SEE P2.1 FOR PLUMBING GENERAL NOTES

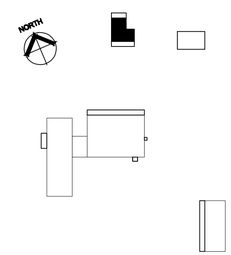

Texas Department of Transportation
125 E. 11th Street
Austin, Texas 78701-2483
(512) 416-3000
Copyright © 2005 Texas Department of Transportation

THIS DOCUMENT IS RELEASED FOR THE PURPOSE OF
INFORMATION ONLY
NOT FOR REGULATORY
APPROVAL, PERMITTING,
OR CONSTRUCTION.

WACO AREA ENGINEER
AND MAINTENANCE FACILITY
WACO, MCLENNAN COUNTY
WACO DISTRICT

Revisions

Drawn by: KCR
Project No. CBC4704-00672
Date 05.21.2007
Sheet No.
P2.3
of 9P sheets

PLUMBING PLAN - WASH BAY

NOTE: THIS DRAWING WAS CREATED FOR PRODUCTION ON 22" x 34" SHEET SIZE. DO NOT SCALE PRINTS.

CADFILE: T:\MNTR\M200\FTW\CBC4704-00-637\02-77-4704X00637\Acad\proto\typical pdf\sheets\Acad\MEP\PLUMP2_3.dwg Plotted: Fri, Aug. 07, 2009 @ 1:40 PM By: MBAZAN

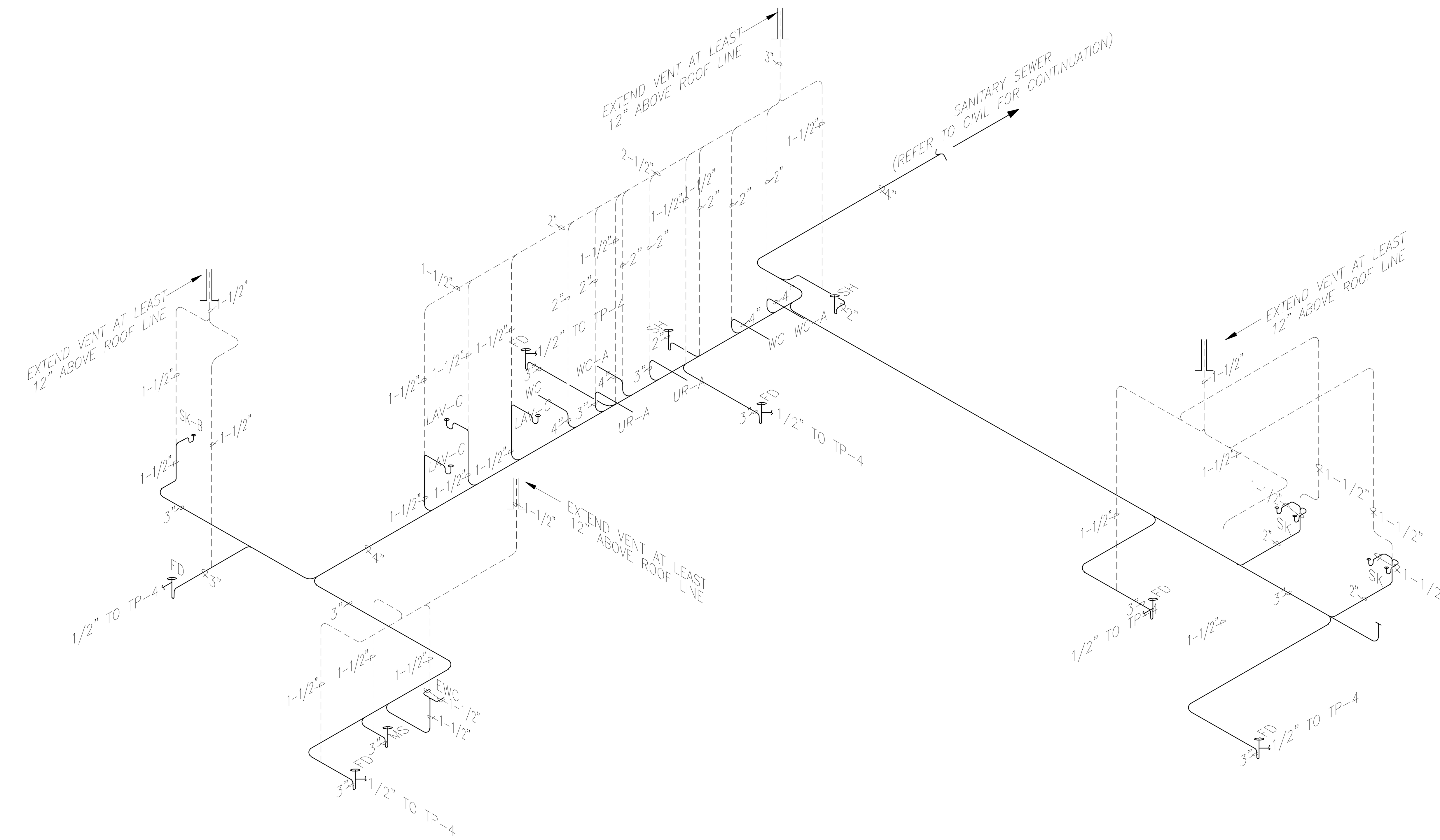

1 LAB/SHOP BUILDING SANITARY SEWER RISER
SCALE: NOT TO SCALE

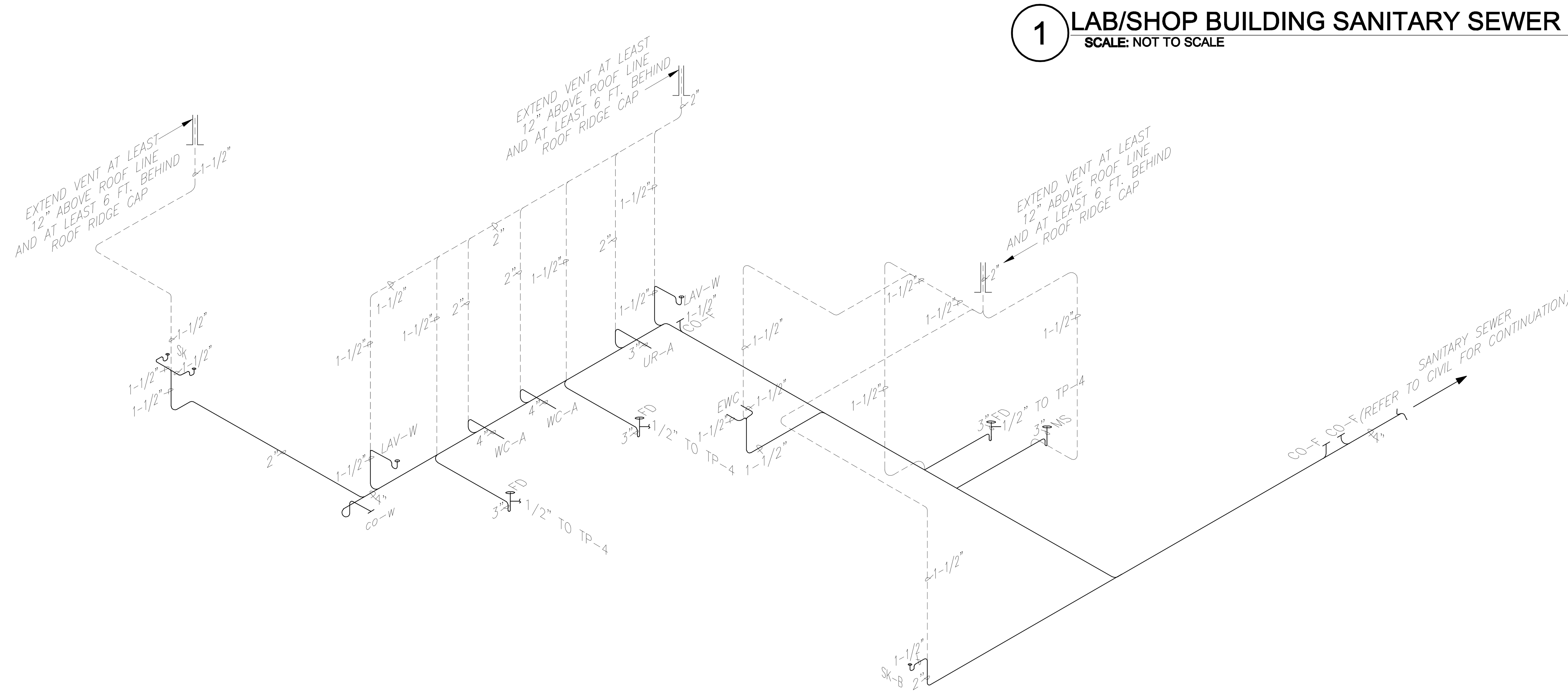

2 OFFICE BUILDING SANITARY SEWER RISER
SCALE: NOT TO SCALE

PLUMBING RISER DIAGRAMS - SANITARY SEWER

NOTE: THIS DRAWING WAS CREATED FOR PRODUCTION ON 22" x 34" SHEET SIZE. DO NOT SCALE PRINTS.

Texas Department of Transportation
125 E. 11th Street
Austin, Texas 78701-2483
(512) 416-2055
Copyright © 2005 Texas Department of Transportation

THIS DOCUMENT IS RELEASED FOR THE PURPOSE OF
INFORMATION ONLY
NOT FOR REGULATORY
APPROVAL, PERMITTING,
OR CONSTRUCTION.

WACO AREA ENGINEER AND MAINTENANCE FACILITY
WACO, MCLENNAN COUNTY
WACO DISTRICT

Revisions

Drawn by: KCR
Project No. CBC4704-00672
Date 05.21.2007
Sheet No.

P3.1
of 9 P sheets

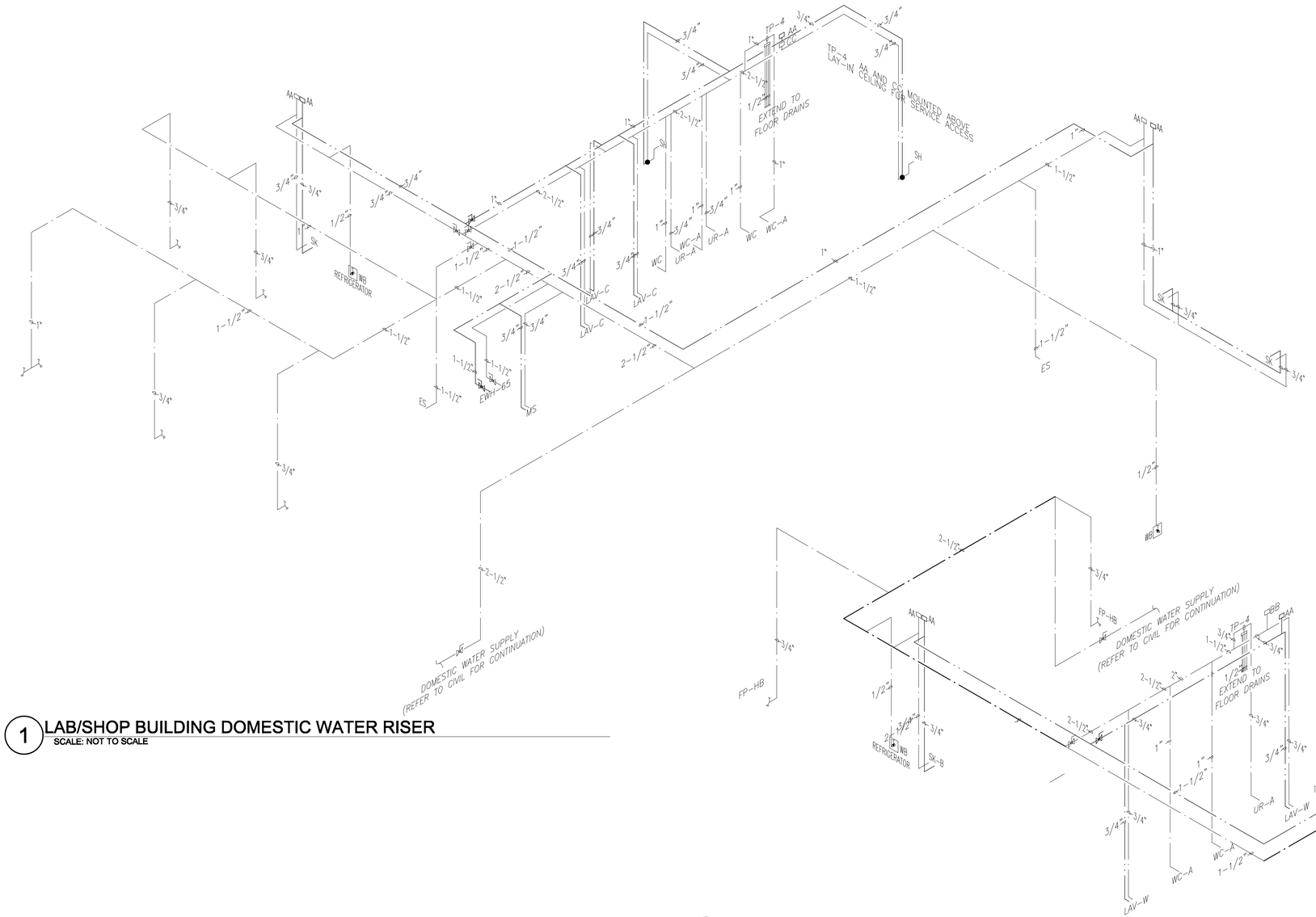

1 LAB/SHOP BUILDING DOMESTIC WATER RISER
SCALE: NOT TO SCALE

2 OFFICE BUILDING DOMESTIC WATER RISER
SCALE: NOT TO SCALE

PLUMBING RISER DIAGRAMS - DOMESTIC WATER

NOTE: THIS DRAWING WAS CREATED FOR PRODUCTION ON 22" x 34" SHEET SIZE. DO NOT SCALE PRINTS.

Texas Department of Transportation
125 E. 11th Street
Austin, Texas 78701-2483
(512) 416-3000

Copyright © 2005 Texas Department of Transportation

THIS DOCUMENT IS RELEASED FOR THE PURPOSE OF
INFORMATION ONLY
NOT FOR REGULATORY
APPROVAL, PERMITTING,
OR CONSTRUCTION.

WACO AREA ENGINEER
AND MAINTENANCE FACILITY
WACO, MCLENNAN COUNTY
WACO DISTRICT

Revisions

Drawn by:
KCR
Project No.
CBC4704-00672
Date
05.21.2007
Sheet No.

P3.2
of 9P sheets

CADFILE: T:\MNTR\WDGF\WCBC4704-00-637\02-77-4704006377\acad\prototype\bid pdf\texas\Acad\MEP\PLUMB\P3_1_and P3_2.dwg Plotted: Fri, Aug. 07, 2009 @ 1:41 PM By: MBAZAN

PLUMBING FIXTURE SCHEDULE

EQUIPMENT CONNECTIONS LISTED BELOW: SYMBOL	COLD	HOT	WASTE	VENT	MANUFACTURER MODEL# WITH DESCRIPTION
AA	3/4"	3/4"	N/A	N/A	WADE MODEL#5 SHOKSTOP WITH A FIXTURE UNIT CAPACITY RANGE 1–11, ALL STAINLESS STEEL CONSTRUCTION WITH WELDED NESTED BELLOWS. LOCATE ABOVE REMOVABLE TILE DROP CEILING OR ACCESSIBLE FROM ACCESS DOOR AS INDICATED ON RISER DIAGRAM.
BB	1"	1"	N/A	N/A	WADE MODEL#10 SHOKSTOP WITH A FIXTURE UNIT CAPACITY RANGE 12–32, ALL STAINLESS STEEL CONSTRUCTION WITH WELDED NESTED BELLOWS. LOCATE ABOVE REMOVABLE TILE DROP CEILING OR ACCESSIBLE FROM ACCESS DOOR AS INDICATED ON RISER DIAGRAM.
CC	1"	1"	N/A	N/A	WADE MODEL#20 SHOKSTOP WITH A FIXTURE UNIT CAPACITY RANGE 33–60, ALL STAINLESS STEEL CONSTRUCTION WITH WELDED NESTED BELLOWS. LOCATE ABOVE REMOVABLE TILE DROP CEILING OR ACCESSIBLE FROM ACCESS DOOR AS INDICATED ON RISER DIAGRAM.
BFP	2"	N/A	N/A	N/A	WATTS SERIES 007, MODEL #007M1QT–S 2" DOUBLE CHECK VALVE ASSEMBLY, LOW PRESSURE DROP BACKFLOW PREVENTER WITH THREADED CONNECTIONS, TWO RESILIENT SEATED QUARTER TURN BALL VALVES, FOUR TOP MOUNTED RESILIENT SEATED TEST COCKS, AND BRONZE STRAINER. THE CHECK MODULE SEATS AND DISCS SHALL BE REPLACEABLE. THE ASSEMBLY SHALL MEET THE REQUIREMENTS OF ASSE STD. 1015 AND AWWA STD. C510.
CO–F	N/A	N/A	4"	N/A	WADE MODEL#6004TY,1,118 CAST IRON CLEANOUT W/ VANDAL PROOF NICKEL BRONZE SCORIATED TOP, BRONZE GASKET PLUG, FOR TY–SEAL INSTALLATION. WHEN INSTALLED OUTSIDE CLEANOUT SHALL BE ENCASED IN 3" THICK CONCRETE PAD 12" X 12" DIMENSION, WITH CAST IRON TOP. PROVIDE APPROPRATE TOP TO MATCH ARCHITECTURAL FLOOR FINISH SCHEDULE.
CO–W	N/A	N/A	4"	N/A	WADE MODEL#8554,E CAST IRON CLEANOUT FERRULE WITH SPIGOT OUTLET AND THREADED BRASS COUNTERSUNK BRASS PLUG INCLUDING WADE MODEL#8480R8 ROUND STAINLESS STEEL ACCESS COVER.
ES	1–1/4"	N/A	1–1/4"	N/A	BRADLEY MODEL#S19–310BF COMBINATION DRENCH SHOWER AND EYE/FACE WASH UNIT WITH FACE SPRAY RING BARRIER FREE MODEL. UNIT SHALL HAVE A 10ø" YELLOW IMPACT–RESISTANT PLASTIC SHOWER HEAD, SPRAYHEAD ASSEMBLY WITH TWIN EYE WASH HEADS WITH PROTECTIVE COVERS, 10ø" STAINLESS STEEL BOWL, CHROME PLATED FACE SPRAY RING WITH HAND AND FOOT OPERATED STAY OPEN CHROME PLATED BRASS BALL VALVES WITH PRESSURE COMPENSATING DEVICES. ALL PIPE AND FITTINGS SHALL BE GALVANIZED STEEL COATED WITH SAFETY YELLOW. PIPE DRAIN OUTLET TOWARD FLOOR DRAIN.
EWC	3/8"	N/A	1–1/2"	N/A	ELKAY MODEL#LZSTL8 WITH LKAPREZL APRON, SELF CONTAINED WALL HUNG ELECTRIC REFRIGERATED WATER COOLER TWO–LEVEL MODEL. 3.7 FULL LOAD AMPS, 325 WATTS. IREFER TO ARCHITECTURAL FOR MOUNTING HEIGHT TO MEET ADA REQUIREMENTS. PROVIDE AND INSTALL TRAP.
FD	N/A	N/A	3"	N/A	WADE MODEL#1103,TY,STD5,1–27 CAST IRON FLOOR DRAIN WITH INTEGRAL CLAMPING COLLAR, 5ø" ADJUSTABLE NICKEL BRONZE STRAINER, TRAP PRIMER AND SEDIMENT BUCKET. PROVIDE AND INSTALL TRAP.
FD–C	N/A	N/A	4"	N/A	WADE MODEL#2374,TY,26 CAST IRON DEEP SUMP FLOOR DRAIN WITH SQUARE TOP AND LOOSE SET DUCTILE IRON GRATE. PROVIDE AND INSTALL TRAP.
FS	N/A	N/A	4"	N/A	WADE MODEL #9014–14 CAST IRON 8" ROUND FLOOR SINK WITH 6" SUMP, WHITE PORCELAIN COATED INTERIOR, PLASTIC DONE STRAINER AND NICKEL BRONZE TOP WITH HINGED GRATE. INSTALL WITH P–TRAP.
HB–FP	3/4"	N/A	N/A	N/A	WATTS MODEL#FHB–2–4, FROST–PROOF DRAINING WALL HYDRANT 3/4" INLET WITH VACUUM BREAKER. 3/4" HOSE THREAD OUTLET. SPECIFIED WALL THICKNESS IS 4 INCHES. INSTALL 24" A.F.F.
HB	3/4"	N/A	N/A	N/A	WATTS MODEL#SC8–4, 3/4" FEMALE NPT INLET CAST BRASS HOSE BIBB, WITH VACUUM BREAKER. INSTALL 24" A.F.F.
LAV–C	1/2"	1/2"	1–1/4"	N/A	AMERICAN STANDARD MODEL#0475.020, "AQUALYN" 20–3/8" X 17–3/8" WHITE, VITREOUS CHINA, SELF RIMMING, OVAL, COUNTER TOP LAVATORY. CHICAGO FAUCETS #404CP LAVATORY FAUCET INCLUDES MODEL#E12 AERATOR AND MODEL#390 ADA–COMPLIANT CURVED LEVER HANDLES AND OFFSET LAVATORY STRAINER. SUPPLY AND INSTALL WITH STOPS AND BRAIDED STAINLESS STEEL RISER HOSES.
LAV–W	1/2"	1/2"	1–1/4"	N/A	AMERICAN STANDARD MODEL#0356.015, "LUCERNE" 20–1/2" X 18–1/4" WHITE VITREOUS CHINA WALL HUNG LAVATORY. CHICAGO FAUCETS #404CP LAVATORY FAUCET INCLUDES MODEL#E12 AERATOR AND MODEL#390 ADA–COMPLIANT CURVED LEVER HANDLES AND OFFSET LAVATORY STRAINER. SUPPLY AND INSTALL WITH STOPS AND BRAIDED STAINLESS STEEL RISER HOSES. INSTALL ON EXTENDED–ARM, IN–WALL CARRIER BY WADE, ZURN, OR APPROVED EQUAL.
MS	3/4"	3/4"	3"	N/A	ACORN MODEL#TNC–24–BDS–CRS–OC–SH–SSC–TF2–KH36–KMH–KF–KWG–2–24" PRECAST TERRAZZO–WARE NEO–CORNER MOP SINK WITH STAINLESS STEEL WALL GAURDS, 36" HOSE AND MOP HANGER, ALL EXPOSED SURFACES SHALL BE FREE FROM PITS AND IMPERFECTIONS WITH A SEALED SURFACE. INTEGRAL DRAIN SHALL HAVE A STAINLESS STEEL STRAINER AND PROVIDE FOR AN INSIDE CAULKED CONNECTION TO A 3" PIPE WITH TRAP TO BE INSTALLED PER MANUFACTURER'S RECOMMENDATION. CHICAGO FAUCETS #897–RCF–369 ROUGH CHROME FINISH ADJUSTABLE SERVICE SINK FAUCET, PAIL HOOK WITH WALL SUPPORT, VACUUM BREAKER SPOUT, 3/4" HOSE THREAD OUTLET INTEGRAL STOP ARMS. MOUNT ON WALL 36" A.F.F.
SH	1/2"	1/2"	2"	N/A	CHICAGO FAUCETS MIXING VALVE MODEL# 2500–VOCCP, HOSE/HEAD/SLIDE BAR CHICAGO FAUCETS MODEL#153CR20035, VACUUM BREAKER/WALL SPOUT CHICAGO FAUCETS MODEL#778–9KJKCP. WHICH INCLUDES THE FOLLOWING: A TEMPSHIELD MIXING VALVE CAPABLE OF THERMOSTATIC & PRESSURE BALANCING INCLUDING INTEGRAL CHECK STOPS WITH A HAND HELD SHOWER USING A 69" METAL CLAD HOSE WITH 51" SLIDE BAR AND WALL SPOUT WITH VACUUM BREAKER. INSTALL IN ACCORDANCE TO ADA REQUIREMENTS.
SJ	N/A	N/A	N/A	N/A	OPW ENGINEERED SYSTEMS SWIVEL JOINT MODEL#3320–0201 2" BRONZE ONE–DIMENSIONAL SWIVEL JOINT, WITH BUNA–N–SEAL.
SK	1/2"	1/2"	1–1/2"	N/A	JUST MANUFACTURING, MODEL#DL–ADA–1933–A–GR, 18 GAUGE STAINLESS DOUBLE BOWL KITCHEN SINK, DIMENSION 33" X 19" WITH CENTER DRAINS. CHICAGO FAUCETS # 201A–GN8AE3–370CPR SINK FAUCET, WITH BRAIDED STAINLESS STEEL RISER HOSES. CONTRACTOR SHALL PROVIDE AND INSTALL ADA–OFFSET SINK STAINLESS STRAINER.
SK–B	1/2"	1/2"	1–1/2"	N/A	JUST MANUFACTURING, MODEL#SL–ADA–1613–A–GR, 18 GAUGE STAINLESS SINGLE BOWL SINK, DIMENSION 13" X 16" WITH CENTER DRAINS. CHICAGO FAUCETS # 201A–GN8AE3–370CPR SINK FAUCET, WITH BRAIDED STAINLESS STEEL RISER HOSES. CONTRACTOR SHALL PROVIDE AND INSTALL ADA–OFFSET SINK STAINLESS STRAINER.
SSK	3/4"	3/4"	2"	N/A	AMERICAN STANDARD MODEL#7692.008, 22" X 18" ACID RESISTING, WHITE ENAMELED CAST IRON DRILLED BACK WALL HUNG SERVICE SINK, WITH 2" CAST IRON TRAP STANDARD MODEL#7798.020, RIM GUARD MODEL#8379.018, CHICAGO FAUCETS #897–RCF–369 ROUGH CHROME FINISH ADJUSTABLE SERVICE SINK FAUCET, PAIL HOOK WITH WALL SUPPORT, VACUUM BREAKER SPOUT, 3/4" HOSE THREAD OUTLET INTEGRAL STOP ARMS.
TP	1/2"	N/A	N/A	N/A	WADE MODEL#2400S, SINGLE DISTRIBUTION 1/2" TRAP PRIMER VALVE WITH VACUUM BREAKER. 1/2" SWEAT CONNECTIONS. ALL BRONZE BODY, NONLIMING INTERNAL OPERATING ASSEMBLY WITH A GASKETED BRONZE COVER OR APPROVED EQUAL. INSTALL PER MANUFACTURERS RECOMMENDATIONS.
TP–4	1/2"	N/A	N/A	N/A	WADE MODEL#2400MF, SINGLE DISTRIBUTION 1/2" TRAP PRIMER VALVE WITH VACUUM BREAKER INCLUDING OPTIONAL DISTRIBUTION UNIT WITH FOUR 3/8" NPT FEMALE CONNECTIONS. ALL BRONZE BODY, NONLIMING INTERNAL OPERATING ASSEMBLY WITH A GASKETED BRONZE COVER OR APPROVED EQUAL. INSTALL PER MANUFACTURERS RECOMMENDATIONS.
UR–A (ADA)	3/4"	N/A	2"	N/A	AMERICAN STANDARD MODEL#6501.010 "WASHBROOK 1.0 GPF, BARRIER FREE WHITE VITREOUS CHINA SIPHON JET URINAL WITH 3/4" TOP INLET SPUD WITH SLOAN ROYAL FLUSH VALVE MODEL 186–1. MOUNT URINAL WITH TOP OF RIM AT 17" ABOVE FINISH FLOOR. INSTALL URNINAL ON IN–WALL UNIVERSAL CARRIER WADE MODEL#400 SERIES. INSTALL PER MANUFACTURERS' RECOMMENDATIONS.
VB	N/A	N/A	N/A	N/A	ROUGH BRASS FINISH ATMOSPHERIC VACUUM BREAKER MANUFACTURED BY WATTS MODEL #800M4QT, 2" N.P.T. WITH REPLACEABLE SEATS.
WB	1/2"	N/A	N/A	N/A	IPS CORPORATION MODEL#82088, RECESSED ICE MAKER BOX WITH FACTORY INSTALLED VALVE 1/2" SWEAT CONNECTION.
WC (ADA)	1"	N/A	4"	2"	AMERICAN STANDARD MODEL#2257.103, "AFWALL ELONGATED SIPHON JET ACTION FLUSH VALVE TOILET 1.6 GPF, WHITE VITREOUS CHINA WALL HUNG, 1–1/2" BRASS TOP SPUD. SLOAN ROYAL #111 FLUSH VALVE. REFER TO ARCHITECTURAL FOR MOUNTING HEIGHT. BENEKE #521HPSS ELONGATED WHITE OPEN FRONT SEAT WITHOUT LID. INSTALL TOILET ON NO–HUB SINGLE AND DOUBLE FIXED OFFSET VERTICAL CARRIER WADE MODEL#371SERIES. INSTALL CARRIER AND TOILET PER MANUFACTURERS' RECOMMENDATIONS.

AIR COMPRESSOR SCHEDULE

MARK	MANUFACTURER, MODEL/SIZE	TANK SIZE (GALLONS)	TANK CONFIGURATION	MAX. HP	CAPACITY (CFM) @175 PSI	RPM	OUTLET SIZE	VOLT/HZ/PH	No. STAGES	MAX. PSI RATING	RATED FLOW SCFM	FILTRATION RATING (MICRONS)
COMP	INGERSOLL–RAND MODEL# 2545N7.5FP	80	VERTICAL	7.5	27.0	825	3/4" NPT	208/60/3	2	175	N/A	N/A
REG/GAUGE	INGERSOLL–RAND MODEL# R27241–600, WITH GAUGE	N/A	N/A	N/A	N/A	N/A	1/2" NPT	N/A	N/A	200	150	N/A
SEP	INGERSOLL–RAND MODEL# PS–060	1	N/A	N/A	N/A	N/A	3/4" NPT	N/A	N/A	N/A	60	N/A
P–FILTER	INGERSOLL–RAND MODEL# GP–123	N/A	N/A	N/A	N/A	N/A	3/4" NPT	N/A	N/A	N/A	123@100 PSI	1
A–FILTER	INGERSOLL–RAND MODEL# HE–123	N/A	N/A	N/A	N/A	N/A	3/4" NPT	N/A	N/A	N/A	123@100 PSI	0.01

REMARKS:

1. BOND COPPER COMPRESSED AIR PIPING WITH No. 8 AMERICAN WIRE GAUGE WITH COPPER PIPE CLAMPS TO NEAREST ABOVE SLAB DOMESTIC WATER PIPING.
2. AIR COMPRESSOR SHALL INCLUDE A FACTORY MOUNTED MOTOR STARTER, ADJUSTABLE PRESSURE SWITCH, CENTRIFUGAL UNLOADER AND AUTOMATIC RECIEVER TANK DRAIN.
3. AIR COMPPRESSOR PUMP SHALL BE 100% CAST IRON RATED FOR 15,000 HOURS.
4. START UP KIT SHALL BE INSTALLED AND PROVIDED GIVING THE CAPABILITY OF MAINTENANCE FOR ONE YEAR.
5. AIR COMPRESSOR SHALL HAVE A TWO YEAR PUMP WARRANTY AND FIVE YEAR RECIEVER TANK WARRANTY.
6. AUTO DRAIN RECIEVER TANK DRAIN VALVE AND AUTO DRAIN COMPRESSED AIR FILTERS SHALL DRAIN TO OIL/WATER SEPARATOR.
7. RIGID MOUNT OIL/WATER SEPARATOR ON GALVANIZED METAL CHAIR. OIL/WATER SEPARATOR DRAIN SHALL BE 18 INCHES ABOVE FINISHED FLOOR.
8. COMPRESSED AIR PIPING SHALL BE 3/4" TYPE "K" COPPER.
9. PROVIDE ONE SPARE REPLACEABLE FILTER ELEMENT WITH EACH COMPRESSED AIR FILTER.

ELECTRIC HOT WATER HEATER SCHEDULE

MARK	MANUFACTURER, MODEL/SIZE	GALLON CAPACITY	GPH RECOVERY @90° RISE	ELEMENT WATTAGE	FULL LOAD AMPERAGE	VOLT/HZ/PH	JACKET DIAMETER	TOTAL HEIGHT
EWH–65	MANUFACTURED BY AMERICAN MODEL#E62–65H–045DV INCLUDES METAL CHAIR MANUFACTURED BY WATTS, MODEL#AS–26	66	20.7	4,500	21.6	208/60/1	22"	59.25"
EWH–30	MANUFACTURED BY AMERICAN MODEL#E62–30H–045DV INCLUDES METAL CHAIR MANUFACTURED BY WATTS, MODEL#AS–20	30	20.7	4,500	21.6	208/60/1	16"	46"

REMARKS:

1. WATER HEATERS SHALL BE UL 174 LISTED AND MEET OR EXCEED ASHRAE 90.1–2001.
2. ROUTE T&P RELIEF VALVE PIPING AS INDICATED IN PLANS.
3. PROVIDE AND INSTALL WATER HEATER DRAIN PAN. ROUTE DRAIN PIPING FOR DRAIN PAN AS INDICATED IN PLANS.
4. ALL DRAINS SHALL BE SHALL BE HARDDRAWN TYPE "K" COPPER.
5. PROVIDE AND INSTALL DRAIN PAN WITH DRAIN AND WATER HEATER GALVANIZED METAL CHAIR FOR EACH WATER HEATER, UNLESS NOTED OTHERWISE.
6. ALL HOT WATER HEATERS SHALL COME WITH A 6 YEAR LIMITED TANK AND PARTS WARRANTY.
7. INSTALL DIELECTRIC UNIONS AND HEAT TRAP CHECK VALVES ON HOT AND COLD WATER HOT WATER HEATER CONNECTIONS.
8. BOND HOT AND COLD WATER PIPING WITH No. 8 AMERICAN WIRE GAUGE WITH COPPER PIPE CLAMPS TO MAINTAIN GROUNDING FOR HOT WATER PIPING.
9. EACH ELECTRIC HOT WATER HEATER SHALL INCLUDE THE FOLLOWING: INTERNAL ANODE ROD, COLD WATER DIP TUBE WITH TOP WATER CONNECTIONS, AND BUILT IN ELECTRIC JUNCTION BOX READY FOR 3/4" CONDUIT CONNECTION.

WATER PURIFICATION AND RECYCLING SYSTEM

SEPARATOR SYSTEM COMPONENTS:	RS–1
A	MODEL CL–30D, SOLIDS SEPARATOR
B	165 GALLON POLYETHYLENE STORAGE TANK
C	MODEL CLB–603A, RECYCLING UNIT
D	1000 GALLON POLYETHYLENE STORAGE TANK
E	PRESSURE WASHER (SEE SPECIFICATIONS)
F	(NOT USED)
G	(NOT USED)
X1	OIL SKIMMING BUCKET
X2	PRESSURE TANK
X3	(NOT USED)
X4	MIN 9 CFM, 3 HP VERTICAL AIR COMPRESSOR
X5	SUMP PUMP
MINIMUM SYSTEM CAPACITY (GPM)	5.0
FUEL SOURCE (E AND G)	DIESEL
POWER REQUIREMENTS:	
# 208/240 VOLT AC, 1ø CIRCUITS	4
# 20A, 120 VOLT AC, 1ø CIRCUITS	1
TYPE OF WATER PURIFICATION	BIOREMEDIATION
MANUFACTURER	WATER MAZE WATER TREATMENT SYSTEMS

REMARKS:

1. THE ABOVE SCHEDULED CLOSED LOOP RECYCLE SYSTEM SHALL BE COMPLETELY SELF CONTAINED.
2. THE COMPLETE SYSTEM SHALL REQUIRE SINGLE PHASE, 120 OR 208 VOLT AC POWER, TO A CONTROL PANEL(S) INSTALLED ON THE SKID BY THE MANUFACTURER.
3. THE INSTALLED SYSTEM SHALL INCLUDE ALL PUMPS AND PIPING NECESSARY FOR TRANSFERING WATER FROM THE WASHBAY SUMP TO THE RS–1 SYSTEM, BETWEEN COMPONENTS OF THE SYSTEM, AND FOR THE SUPPLY OF RECYCLED WATER TO THE PRESSURE WASHER. FIELD PIPING SHALL BE INSTALLED USING SCHEDULE 80 PVC.
4. EACH COMPONENT SHALL INCLUDE COMPLETE CONTROLS AND WIRING FOR THE INTEGRATED OPERATION OF THE COMPLETE SYSTEM.
5. THE COMPLETE SYSTEM SHALL INCLUDE A PRESSURE WASHER. REFER TO SPECIFICATIONS.
6. UNIT SHALL INCLUDE THE ABILITY TO REMOVE EMULSIFIERS FROM THE WATER.
7. THE RECYCLED WATER SHALL BE FREE OF OIL TO A MAXIMUM CONCENTRATION OF 500 PPM. THE RECYCLED WATER SHALL HAVE A MAXIMUM CONCENTRATION OF SUSPENDED SOLIDS OF 100 PPM.
8. COMPLETE SYSTEM SHALL BE INSTALLED BY MANUFACTURER TRAINED AND CERTIFIED PERSONNEL TO MANUFACTURER'S SPECIFICATIONS AND RECOMMENDATIONS.
9. REFER TO SPECIFICATIONS FOR ADDITIONAL AND SPECIFIC REQUIREMENTS, INCLUDING TRAINING OF OWNER'S EMPLOYEES.
10. IF A SUBSTITUTION FOR THE SCHEDULED AND SPECIFIED SYSTEM IS ACCEPTED, THE CONTRACTOR SHALL BE RESPONSIBLE TO ASSURE THAT THE SYSTEM CONFIGURATION FITS WITHIN THE AVAILABLE SPACE AND THAT PIPING, CONTROL AND POWER REQUIREMENTS SPECIFIC TO THAT SYSTEM ARE ACCOMMODATED.
11. INSTALL AN INTAKE SILENCER ON THE AIR COMPRESSOR.

Texas Department of Transportation
125 E. 11th Street
Austin, Texas 78701-2483
(512) 416-3046
Copyright © 2005 Texas Department of Transportation

THIS DOCUMENT IS RELEASED FOR THE PURPOSE OF INFORMATION ONLY
NOT FOR REGULATORY APPROVAL, PERMITTING, OR CONSTRUCTION.

WACO AREA ENGINEER AND MAINTENANCE FACILITY
WACO, MCLENNAN COUNTY
WACO DISTRICT

Revisions

Drawn by: KCR
Project No. CBC4704-00672
Date 05.21.2007
Sheet No. P4.1 of 9P sheets

PLUMBING SCHEDULES

NOTE: THIS DRAWING WAS CREATED FOR PRODUCTION ON 22" x 34" SHEET SIZE. DO NOT SCALE PRINTS.

CADFILE: T:\MNTF\MD02F\TWC\BC4704-00-637\02-77-470400637\Acad\prototypical pdfs\waco\Acad\MEP\PLMB\P4_1.dwg Plotted: Fri. Aug. 07, 2009 @ 1:42 PM By: MBAZAN

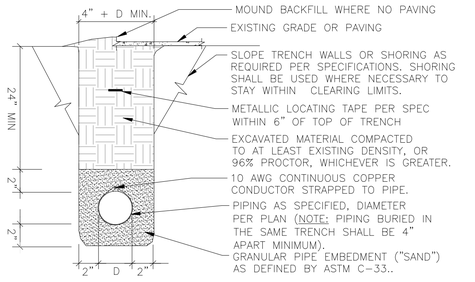

1 SEWER PIPING TRENCH
SCALE: NOT TO SCALE

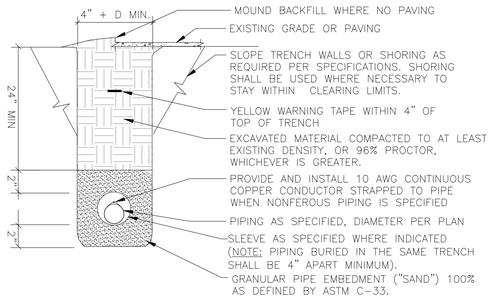

2 GAS PIPING TRENCH
SCALE: NOT TO SCALE

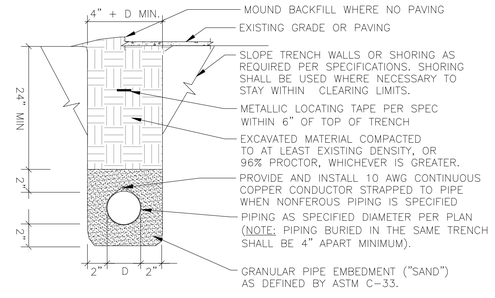

3 WATER PIPING TRENCH
SCALE: NOT TO SCALE

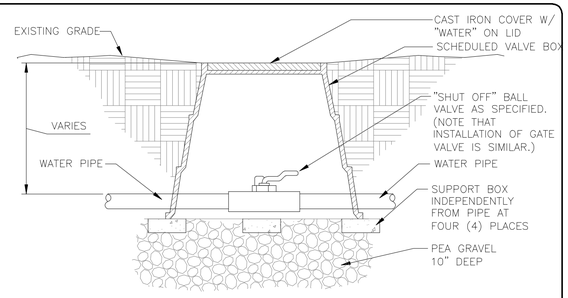

4 VALVE BOX & BALL VALVE IN SOIL
SCALE: NOT TO SCALE

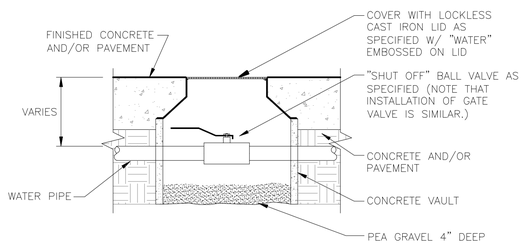

5 VALVE BOX & BALL VALVE IN CONCRETE
SCALE: NOT TO SCALE

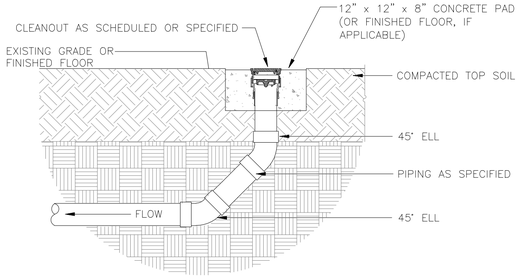

6 END OF LINE CLEAN OUT
SCALE: NOT TO SCALE

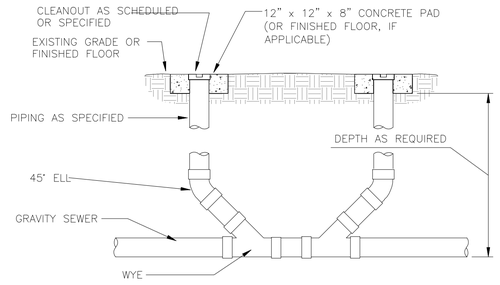

7 TWO WAY CLEAN OUT
SCALE: NOT TO SCALE

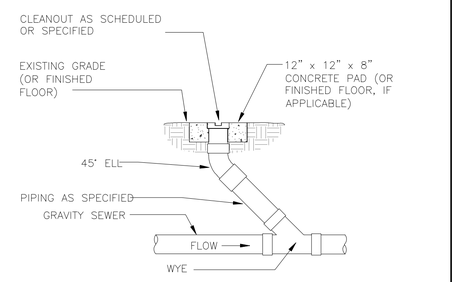

8 ONE WAY CLEAN OUT
SCALE: NOT TO SCALE

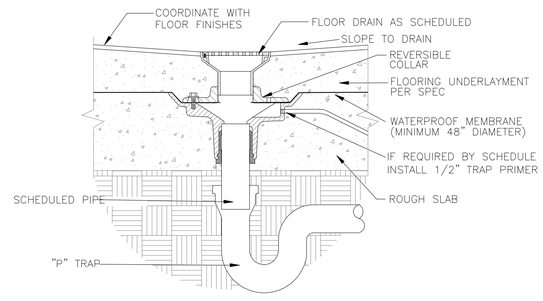

9 FLOOR DRAIN WITH TRAP PRIMER
SCALE: NOT TO SCALE

10 DETAIL NOT USED
SCALE: NOT TO SCALE

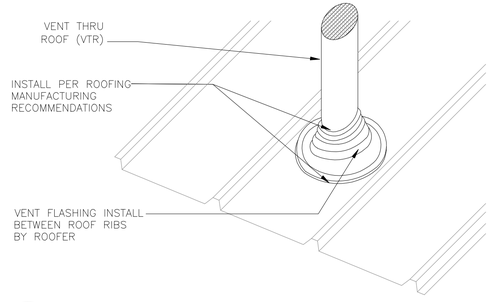

11 VENT THRU ROOF (VTR)
SCALE: NOT TO SCALE

12 DETAIL NOT USED
SCALE: NOT TO SCALE

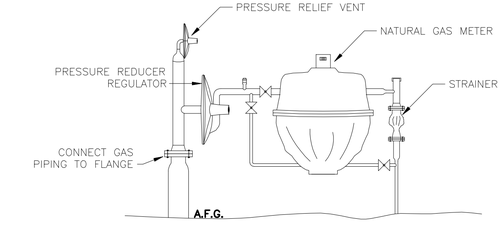

13 NATURAL GAS METER
SCALE: NOT TO SCALE

14 DETAIL NOT USED
SCALE: NOT TO SCALE

15 DETAIL NOT USED
SCALE: NOT TO SCALE

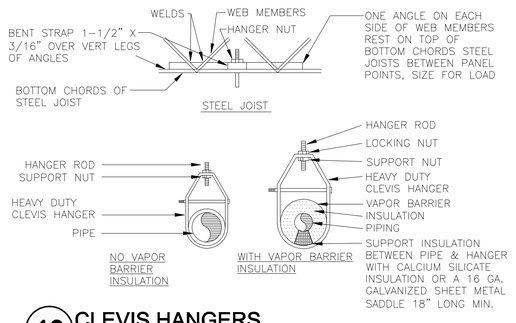

16 CLEVIS HANGERS
SCALE: NOT TO SCALE

PLUMBING DETAILS - 1

NOTE: THIS DRAWING WAS CREATED FOR PRODUCTION ON 22" x 34" SHEET SIZE. DO NOT SCALE PRINTS.

Texas Department of Transportation
125 E. 11th Street
Austin, Texas 78701-2483
(512) 416-3000

Copyright © 2005 Texas Department of Transportation

THIS DOCUMENT IS RELEASED FOR THE PURPOSE OF
INFORMATION ONLY
NOT FOR REGULATORY APPROVAL, PERMITTING, OR CONSTRUCTION.

WACO AREA ENGINEER AND MAINTENANCE FACILITY
WACO, MCLENNAN COUNTY
WACO DISTRICT

Revisions

Drawn by: KCR
Project No. CBC4704-00672
Date 05.21.2007
Sheet No.

P5.1
of 9P sheets

CADFILE: T:\NITP\WD\GFTWC\SC4704-00-657\02-77-4704006577\Acad\sys\cts\sys\cts\sys\cts

1 DETAIL NOT USED
SCALE: NOT TO SCALE

2 DETAIL NOT USED
SCALE: NOT TO SCALE

3 DETAIL NOT USED
SCALE: NOT TO SCALE

4 DETAIL NOT USED
SCALE: NOT TO SCALE

5 DETAIL NOT USED
SCALE: NOT TO SCALE

6 WALL HUNG W.C. W/FIXED CARRIER
SCALE: NOT TO SCALE

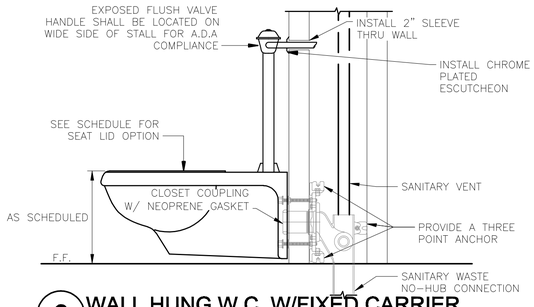

7 DETAIL NOT USED
SCALE: NOT TO SCALE

8 DETAIL NOT USED
SCALE: NOT TO SCALE

9 DETAIL NOT USED
SCALE: NOT TO SCALE

10 WATER HEATER ON CHAIR
SCALE: NOT TO SCALE

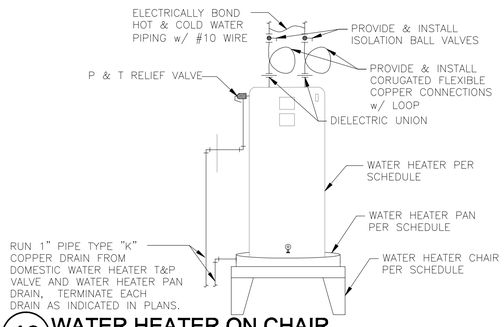

11 DETAIL NOT USED
SCALE: NOT TO SCALE

12 COMPRESSED AIR SYSTEM
SCALE: NOT TO SCALE

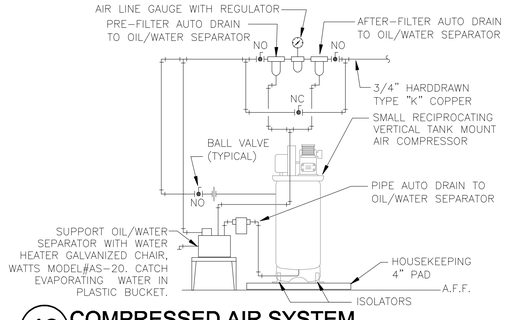

13 AIR DROP WITH QUICK DISCONNECT
SCALE: NOT TO SCALE

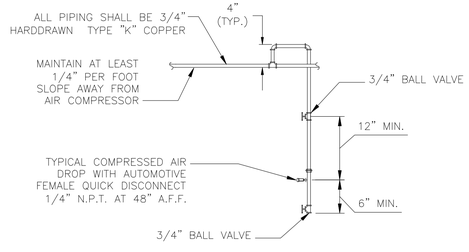

14 DETAIL NOT USED
SCALE: NOT TO SCALE

15 DETAIL NOT USED
SCALE: NOT TO SCALE

PLUMBING DETAILS - 2

NOTE: THIS DRAWING WAS CREATED FOR PRODUCTION ON 22" x 34" SHEET SIZE. DO NOT SCALE PRINTS.

Texas Department of Transportation
125 E. 11th Street
Austin, Texas 78701-2483
(512) 416-3000

Copyright © 2005 Texas Department of Transportation

THIS DOCUMENT IS RELEASED FOR THE PURPOSE OF
INFORMATION ONLY
NOT FOR REGULATORY
APPROVAL, PERMITTING,
OR CONSTRUCTION.

WACO AREA ENGINEER AND MAINTENANCE FACILITY
WACO, MCLENNAN COUNTY
WACO DISTRICT

Revisions

Drawn by: KCR
Project No. CBC4704-00672
Date 05.21.2007
Sheet No.

P5.2
of 9 P sheets

CADFILE: T:\MNTR\MOD2FTW\CBC4704-00-6571\02-77-47\400637\Acad\prototypical pdf\sheets\Acad\MEP\PLUMP\5_2.dwg Plotted: Fri, Aug. 07, 2009 @ 1:43 PM By: MBAZAN

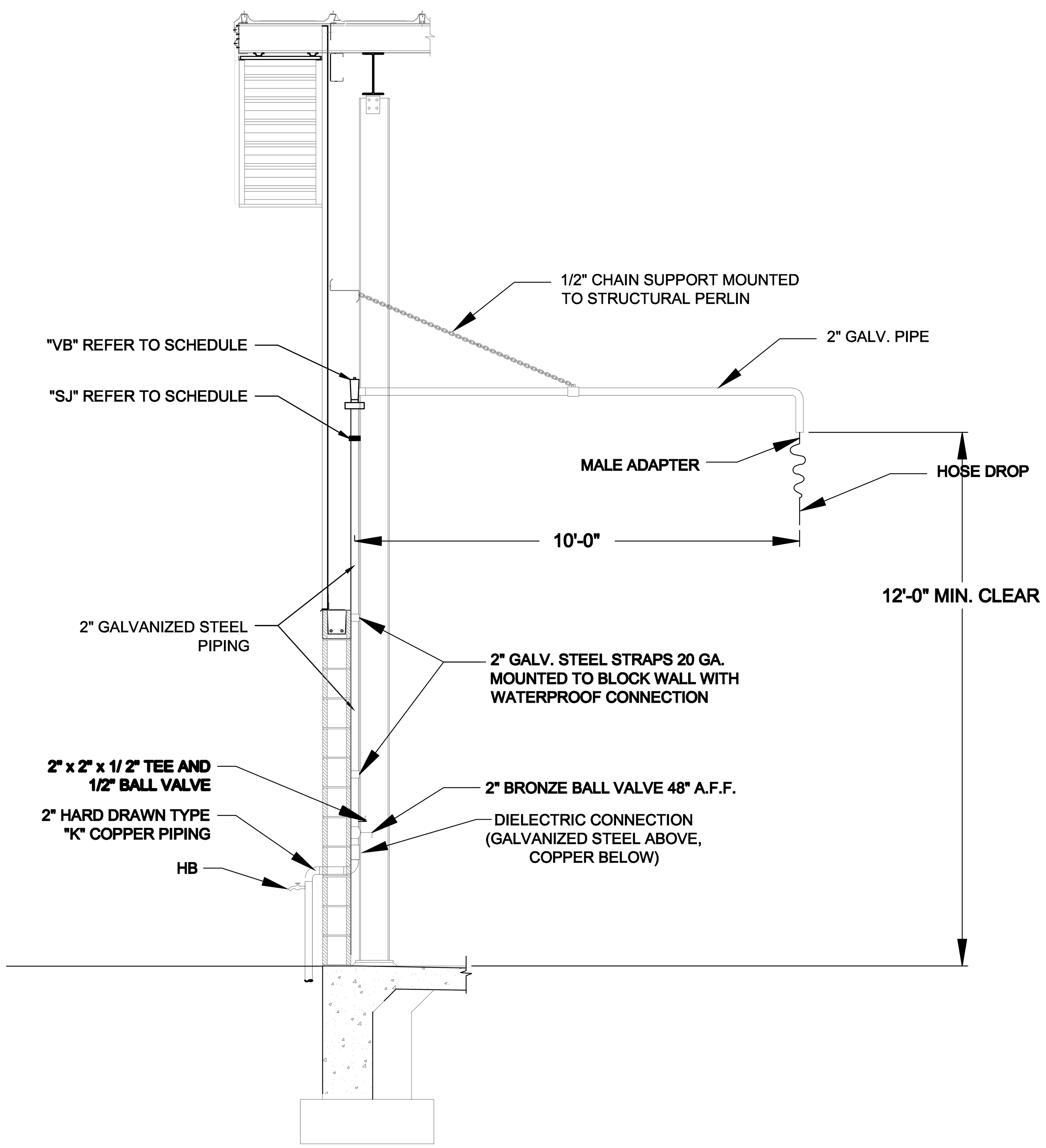

SIDE VIEW

1 TRUCK FILL STAND PIPE
SCALE: NOT TO SCALE

PLUMBING DETAILS - 3

NOTE: THIS DRAWING WAS CREATED FOR PRODUCTION ON 22" x 34" SHEET SIZE. DO NOT SCALE PRINTS.

Texas Department of Transportation
125 E. 11th Street
Austin, Texas 78701-2483
(512) 416-3848

Copyright © 2005 Texas Department of Transportation

THIS DOCUMENT IS RELEASED FOR THE PURPOSE OF INFORMATION ONLY
NOT FOR REGULATORY APPROVAL, PERMITTING, OR CONSTRUCTION.

WACO AREA ENGINEER AND MAINTENANCE FACILITY
WACO, MCLENNAN COUNTY
WACO DISTRICT

Revisions

Drawn by: KCR
Project No. CBC4704-00672
Date 05.21.2007
Sheet No.

P5.3
of 9P sheets

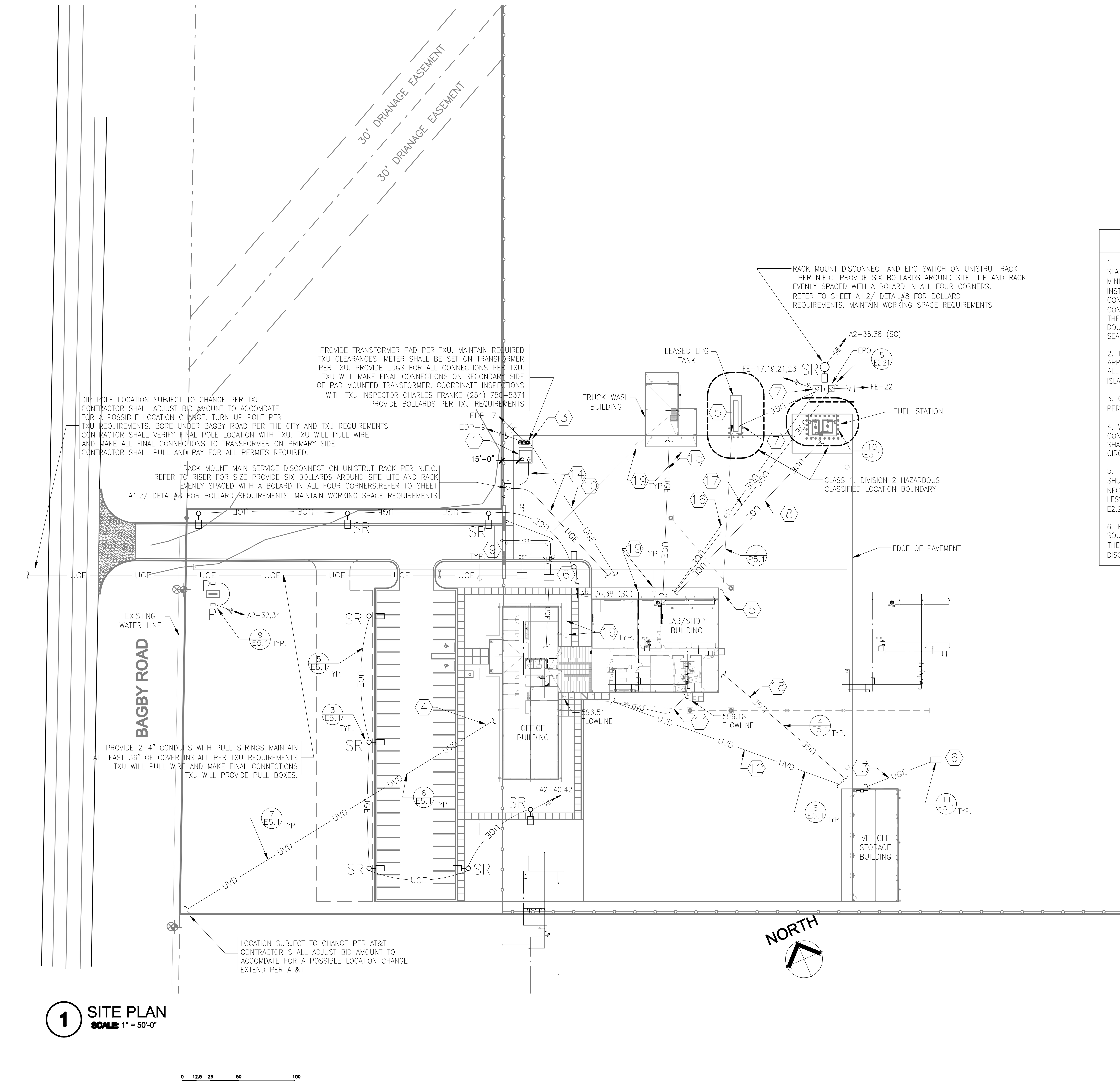

1 SITE PLAN
SCALE: 1" = 50'-0"

NOTE:

ROUTE ALL UNDERGROUND CONDUITS AND PIPES OUTSIDE OF DRIP EGDE OF TREES TO AVOID DAMAGE TO EXISTING TREES TO REMAIN

SEE E2.1 FOR GENERAL NOTES

LPG GENERAL NOTES

1. ALL BRANCH CIRCUIT WIRING FROM PANEL 'FE' TO THE LPG FUEL STATION SHALL BE TYPE THHN LPG RESISTANT SOLID WIRE A MINIMUM OF #12 WIRE IN 3/4"C., GASOLINE RESISTANT, AND INSTALLED IN RIGID GALVANIZED STEEL (R.G.S.). ALL BELOW GRADE CONDUIT SHALL BE RIGID NONMETALIC CONDUIT ENCASED IN RED CONCRETE 3" THICK . ALL LONG RADIUS 90° ELBOWS EMERGING FROM THE EARTH OR CONCRETE SHALL BE RIGID GALVANIZED STEEL AND DOUBLE WRAPPED. CONTRACTOR SHALL INSTALL EXPLOSION-PROOF SEALS IN RIGID GALVANIZED STEEL.

2. THE FIRST FITTING ABOVE THE SLAB SHALL BE AN N.E.C. APPROVED EXPLOSION-PROOF SEAL INSTALL AND PROVIDE SEALS IN ALL CONDUITS EMERGING AND LEAVING THE SLAB AT THE LPG FUEL ISLAND AND AT PANEL "FE", PER N.E.C. .

3. CONTRACTOR SHALL GROUND ABOVEGROUND LPG STORAGE TANKS PER N.E.C. SIMILAR TO E5.1/DETAIL#10.

4. WHERE EMERGENCY POWER-OFF SWITCH (EPO) IS REQUIRED TO CONTROL ADDITIONAL CIRCUIT BREAKERS, ALL SHUNT TRIP DEVICES SHALL BE CONNECTED IN PARALLEL UTILIZING THE SAME CONTROL CIRCUIT.

5. MOUNT EPO - EMERGENCY POWER OFF SWITCH TO ACTIVATE SHUNT TRIP CIRCUIT BREAKERS IN PANEL 'FE' ON PEDESTAL PER NEC 48" A.F.G. THE SWITCH SHALL BE LOCATED MORE THAN 20 BUT LESS THAN 100FT FROM LPG FUEL DISPENSOR. REFER TO E2.9.1/DETAIL#5 FOR FURTHER REQUIREMENTS.

6. EACH EPO SWITCH SHALL DISCONNECT SIMULTANEOUSLY FROM THE SOURCE OF SUPPLY, ALL CONDUCTORS OF THE CIRCUIT, INCLUDING THE GROUNDED CONDUCTOR PER N.E.C., ARTICLE 514-11(A) "CIRCUIT DISCONNECTS".

KEYED NOTES -

1. PAD MOUNTED TRANSFORMER PROVIDED BY TXU INSTALL PAD FOR PAD MOUNTED TRANSFORMER PER TXU REQUIREMENTS ADJUST EQUIPMENT PAD DIMENSIONS AND LOCATION PER TXU. CONTRACTOR SHALL COORDINATE WITH TXU THE CONTACT PERSON IS MIKE DARST 254-750-5293. TXU WILL PROVIDE THE TRANSFORMER, WIRE TO THE TRANSFORMER. THE CONTRACTOR SHALL PROVIDE THE CONDUIT AND PULL STRING, AND THE REQUIRED EQUIPMENT PAD FOR THE PAD MOUNTED TRANSFORMER AND GEN-SET PAD SHALL BE AT LEAST 6 INCHES LARGER THAN ACTUAL GEN-SET AND TRANSFORMER PROVIDED ON ALL SIDES. MAINTAIN TXU CLEARANCE REQUIREMENTS AND GEN-SET MANUFACTURER CLEARANCE REQUIREMENTS. PROVIDE A EXPANSION JOINT IN-BETWEEN THE GEN-SET AND TRANSFORMER REFER TO STRUCTURAL FOR FURTHER REQUIREMENTS. CONTRACTOR SHALL PAY TXU ALL ASSOCIATED FEES.

2. NOT USED.

3. ORIENTATION OF GEN SET SHALL BE SUCH THAT AIRFLOW IS NOT RESTRICTED FAN FAN SHALL NOT FACE FENCE.

4. CONTRACTOR SHALL COORDINATE WITH AT&T; THE CONTACT PERSON IS DAN DURAN 254-757-7112. AT&T WILL PROVIDE THE PEDESTAL AND 200 PAIR VOICE DATA CABLE TO THE TELECOMMUNICATION ROOM AND PROVIDE DEMARCATION IN THE TELECOMMUNICATION ROOM. CONTRACTOR SHALL PROVIDE 2-4" SCHEDULE 80 PVC CONDUITS WITH PULL WIRES, STUB UP IN TELECOMMUNICATION ROOM. VERIFY ACTUAL AND FINAL LOCATION OF TELEPHONE PEDESTAL WITH AT&T. REFER TO SHEET E2.4 FOR CONTINUATION. CONTRACTOR SHALL PAY AT&T ALL ASSOCIATED FEES.

5. CONTRACTOR SHALL COORDINATE LEASED LPG PROVIDER PROVIDE A SHUT OFF VALVE, PRESSURE REGULATOR AND CONNECTION AT THE LEASED LPG TANK EXTEND 2" UNDERGROUND GAS LINE FROM LPG TANK TO GAS TRANSITION RISER. REFER TO SHEET P2.2 FOR LOCATION OF BUILDING ENTRANCE AND FUEL GAS GENERAL NOTES.

6. PROVIDE AND INSTALL PULLBOX FLUSH-WITH-GRADE PULLBOX SIZED PER N.E.C.

7. PROVIDE AND INSTALL 30/2/NF/3R DISCONNECT AND MOUNTING RACK AND FUTURE CONNECTION TO PROPANE TANK. PROVIDE 1 -1" C. EMPTY CONDUIT W/ PULL STRING FROM DISCONNECT TO LPG SLAB STUB UP WITH EXPLOSION PROOF SEAL MARK AND CAP, DO NOT FILL SEAL FOR FUTURE USE.

8. MULTIPLE CONDUITS ROUTED FROM PULLBOXES IN ELECTRIC ROOM TO FUEL STORAGE TANKS FOR FUEL TANK LEVEL MONITORING & REMOTE LEAK SENSING ALARM. REFER TO SHEET E2.21 FOR NUMBER & SIZES OF CONDUITS AND WIRING.

9. 2-1"C W/ PULL STRINGS FROM BOTTOM OF PANEL-A2 TO FLUSH-WITH-GRADE PULLBOX. EXTEND 4-1"C TO GATE OPERATOR EQUIPMENT LOCATIONS PER SHEET A1.3/DETAIL#1. COORDINATE EXACT LOCATIONS WITH SECURITY GATE CONTRACTOR.

10. 2 - 1-1/ 2" C. AND 2-1" C. FOR MAIN POWER, BATTERY CHARGER POWER, CRANKCASE HEATER POWER, CONTROL AND ANNUNCIATOR WIRING TO GENERATOR.

11. 2 - 3" C. W/ 50 PAIR UNDERGROUND VOICE DATA CONDUIT FROM DATA/TELE. ROOM TO RADIO ROOM AND HUB ROOM. GROUND SHEILD AT BOTH ENDS. PROVIDE GROUND ROD IN BOTH ROOMS. GROUND ALL DEVICES IN BOTH ROOMS.

12. 1 - 2" C. W/ 25 PAIR UNDERGROUND VOICE DATA CONDUIT FROM DATA/TELE. ROOM TO VEHICLE STORAGE BLDG.

13. 1- 3" C. FROM TRANSFORMER DISCONNECT IN VECHICLE STORAGE TO PULLBOX FOR FUTURE ASPHALT TANKS.

14. 4- 4" C. FEEDER FROM MAIN SERVICE DISCONNECT PANEL.

15. 2- 2" C. FEEDER FROM PANEL MDP TO PANEL WB.

16. 1- 1" C. BRANCH CIRCUIT FROM PANEL FE TO LPG DISCONNECT.

17. 1- 1" C. BRANCH CIRCUIT FROM PANEL FE TO EPO SWITCH.

18. 2- 2" C. FEEDER FROM PANEL MDP TO PANEL C.

19. EXTEND BUILDING WATER SUPPLY FROM BUILDING TO CIVIL PROVIDED VALVE BOX. MAKE ALL FINAL CONNECTIONS.

Texas Department of Transportation
125 E. 11th Street
Austin, Texas 78701-2483
(512) 416-2000
Copyright © 2005 Texas Department of Transportation

THIS DOCUMENT IS RELEASED FOR THE PURPOSE OF INFORMATION ONLY
NOT FOR REGULATORY APPROVAL, PERMITTING, OR CONSTRUCTION.

WACO AREA ENGINEER AND MAINTENANCE FACILITY
WACO, MCLENNAN COUNTY
WACO DISTRICT

Revisions

Drawn by: CON
Project No. CBC4704-00672
Date 05.21.2007
Sheet No.
PE1.1
of 1 PE sheets

ELECTRICAL & PLUMBING SITE PLAN
NOTE: THIS DRAWING WAS CREATED FOR PRODUCTION ON 22" x 34" SHEET SIZE. DO NOT SCALE PRINTS.

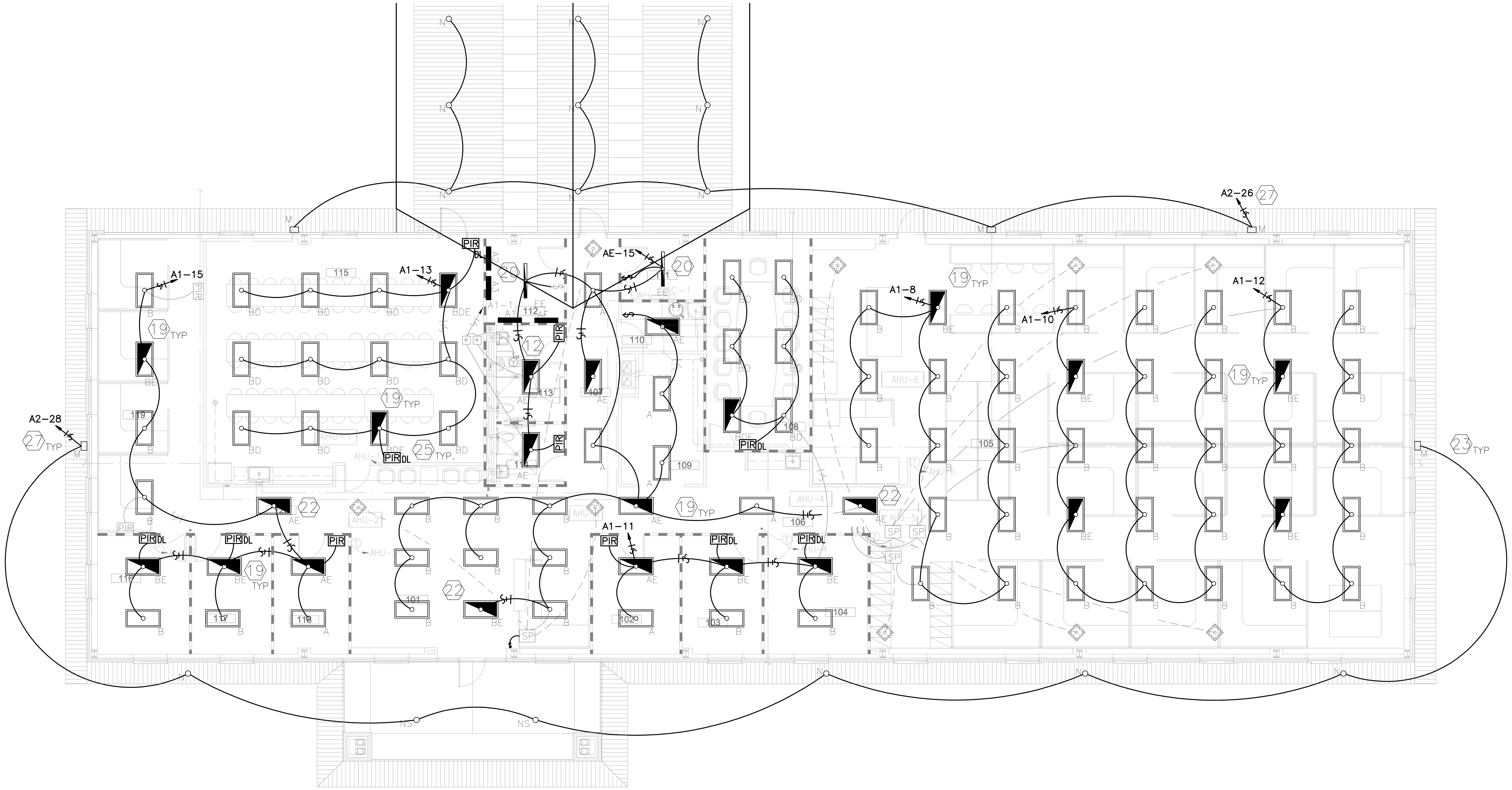

1 LIGHTING PLAN OFFICE BUILDING

SCALE: 1/8" = 1'-0"

0' 2' 4' 8' 16'

KEYED NOTES -

1. 2 – 4" PVC SCHED. 40. ONE W/200 PAIR VOICE DATA CABLE. SPARE W/2 PULL WIRES STUB UP IN TELECOMMUNICATION ROOM. COORDINATE WITH TELEPHONE COMPANY. REFER TO ELECTRICAL SITE PLAN FOR CONTINUATION.
2. CONDUIT SHALL BE COLLARED.
3. PROVIDE AND RIGID MOUNT BACKBOARD, BACKBOARD SHALL BE A FULL SHEET OF PLYWOOD, CDX CONSTRUCTION GRADE AND OR BETTER. INSTALL WITH SMOOTH SIDE EXPOSED, 8FT LENGTH IN THE HORIZONTAL POSITION, WITH TOP OF PLYWOOD 6" TO 8" BELOW THE CEILING. BACKBOARD SHALL BE CAPABLE OF SUPPORTING 200 LBS OF DEAD WEIGHT. PRIOR TO BACKBOARD INSTALLATION, CONTRACTOR SHALL PAINT ALL SURFACES WITH FIRE RETARDANT WHITE PAINT. ALL DAMAGED SURFACES AFTER INSTALLATION SHALL BE REPAINTED. EXPOSED SURFACE SHALL BE FREE OF SIGNIFICANT VOIDS, CRACKS, AND BLEMISHES.
4. NEWTON FIG. 3058 GROUND BUS BAR WITH 1 #6 ISOLATED, INSULATED GROUND IN A 3/4" CONDUIT TO BUILDING SERVICE ENTRANCE GROUND.
5. PROVIDE AND INSTALL DATA RACK REFER TO SPECIFICATIONS.
6. PROVIDE AND INSTALL FIBER CANISTERS, NEATLY MOUNT CANISTERS NEAR BOTTOM OF RACK AS CLOSE AS POSSIBLE.
7. PROVIDE AND INSTALL PUNCH BLOCKS AND WIRE MANAGEMENT SPOOLS BENEATH PUNCH BLOCKS. PUNCH BLOCKS SHALL BE COLOR CODED PER SPECIFICATION. MANUFACTURER COLORED PUNCH BLOCKS ARE ACCEPTABLE.
8. STUB OUT 2 – 4" CONDUIT WITH PULL STRING 5FT OUTSIDE BUILDING BREEWAY FOUNDATION CAP AND MARK LOCATION FOR FUTURE EXTENSION TO IRRIGATION SYSTEM CONTROLLER. FINAL LOCATION FOR WEATHER PROOF RECEPTACLE AND CONDUITS SHALL BE DETERMINED BY THE LANDSCAPE ARCHITECT.
9. SEE RISER AND SITE PLAN FOR NUMBER OF CONDUITS, WIRES, SIZES AND CONTINUATION
10. EMERGENCY GENERATOR ANNUNCIATOR PANEL. PROVIDE#12 THHN/THWN WIRE IN CONDUIT TO GENERATOR CONTROL PANEL. ADJUST QUANTITY AS REQUIRED FOR PANEL ACTUALLY SUPPLIED. SURFACE MOUNT ON TOP OF AUTOMATIC TRANSFER SWITCH.
11. FLUSH MOUNTED 4" X 4" J-BOX WITH BLANK COVER AND 1 " CONDUIT TO ABOVE CEILING FOR FUTURE SECURITY DEVICE. MOUNT AT 48" AFF. PROVIDE AND INSTALL MATCHING FLUSH RING PER SECURITY DEVICE REFER TO OWNER.
12. INTERLOCK EXHAUST FAN WITH THE MENS AND WOMENS LIGHT SWITCHES WITH ONE RELAY PER LIGHT SWITCH. EXHAUST FAN SHALL RUN IF ANY ONE OF THE LIGHT SWITCH IS IN THE "ON" POSITION.

CONTINUED-KEYED NOTES -

13. FLUSH MOUNTED J-BOX 18" A.F.F. WITH 1" CONDUIT TO ABOVE CEILING FOR RADIO CABLE TO RECEPTION AREA
14. COORDINATE WITH MECHANICAL, MECHANICAL SHALL SUPPLY ALL THERMOSTATS, ELECTRICAL SHALL INSTALL 120V SUPPLY THERMOSTATS FOR THE RADIANT HEATERS .
15. PROVIDE MATCHING PLUG. TURN OVER TO OWNER.
16. CONTRACTOR SHALL INSTALL ALL RECEPTACLES, SWITCHES, AND MOTOR SWITCHES IN EQUIPMENT SHOP FLUSH MOUNTED TO PLYWOOD COORDINATE DISCIPLINES.
17. CONTRACTOR SHALL VERIFY LOCATION OF POWER POLES (PP) WITH OWNER. REFER TO MODULAR FURNITURE WIRE STANDARD SHEET E2.4 INSTALL ONE STANDARD VOICE/DATA OUTLET/PER CUBICLE. VERIFY QUANTITY AND LOCATION OF FURNITURE WITH OWNER.
18. POWER IS PROVIDED TO INDOOR FROM OUTDOOR UNIT INSTALL PER MANUFACTURER INSTALLATION REQUIREMENTS.
19. PROVIDE CONTINUOUS POWER TO BATTERY PACK, SWITCH LIGHT ONLY.
20. COORDINATE LIGHT FIXTURES WITH TRADES. PROVIDE ALL NECESSARY HARDWARE TO SUSPEND LIGHT FIXTURES WITH UNISTRUT. MOUNT BOTTOM OF FIXTURES 8FT A.F.F.
21. COORDINATE LIGHT FIXTURES WITH TRADES. PROVIDE ALL NECESSARY HARDWARE TO SUSPEND LIGHT FIXTURES WITH MOUNTING HARDWARE AS REQUIRED. MOUNT BOTTOM OF FIXTURES 16FT A.F.F.
22. UNSWITCHED NIGHT LIGHT.
23. SEE ARCHITECTURAL EXTERIOR ELEVATIONS FOR MOUNTING HEIGHT OF TYPE "M" FIXTURES.
24. NOT USED.
25. PASSIVE INFRARED DUAL LEVEL SWITCHING. ONE SWITCH SWITCHES OUTSIDE LAMPS IN EACH FIXTURE. SECOND SWITCH SWITCHES INSIDE LAMPS IN EACH FIXTURE.
26. NOT USED.
27. ROUTED THROUGH LIGHTING CONTACTOR.

APPLIES TO ALL E-SHEETS

GENERAL NOTES

1. THE LOCATION OF ELECTRICAL ITEMS ON THE ELECTRICAL DRAWINGS ARE DIAGRAMMATIC AND ARE NOT INTENDED TO GIVE COMPLETE AND ACCURATE DETAILS IN REGARD TO LOCATION. EXACT LOCATION SHOULD BE DETERMINED BY ACTUAL MEASUREMENTS AT THE BUILDING, AND WILL IN ALL CASES BE SUBJECT TO THE APPROVAL OF THE ENGINEER. THE ENGINEER RESERVES THE RIGHT TO MAKE ANY REASONABLE CHANGES IN THE LOCATIONS INDICATED WITHOUT ADDITIONAL COST.
2. THE ELECTRICAL DISTRIBUTION SYSTEM SIZING IS BASED ON EQUIPMENT DATA FROM THE SPECIFIED SUPPLIER OR A TYPICAL SUPPLIER. THE CONTRACTOR IS FULLY RESPONSIBLE FOR PROVIDING THE CORRECTLY SIZED ELECTRICAL SYSTEM TO MATCH THE REQUIREMENTS OF THE NEW EQUIPMENT.
3. THE ELECTRICAL SYSTEM SHALL BE GROUNDED IN ACCORDANCE WITH ARTICLE 250 OF THE NATIONAL ELECTRICAL CODE. ALL ELECTRICAL SYSTEMS RECEPTACLES, CABINETS, JUNCTION BOXES, MOTOR FRAMES, MISCELLANEOUS EQUIPMENT, ETC. SHALL BE GROUNDED BY A GREEN-WIRE GROUND CONDUCTOR.
4. UNLESS OTHERWISE NOTED – ALL HOME RUNS SHALL BE 3 EACH #12 THHN/THWN, ¾" C.
5. THE MINIMUM CONDUIT SIZE FOR ELECTRICAL CIRCUITS SHALL BE ¾". THE MINIMUM CONDUIT SIZE FOR VOICE / DATA CIRCUITS SHALL BE 1".
6. ALL DUPLEX/QUAD OUTLETS SHALL BE MOUNTED AS INDICATED ON DRAWING, TO CENTER OF OUTLET. GROUND TERMINAL SHALL POINT DOWN. MOUNT 18" A.F.F. UNLESS OTHERWISE NOTED.
7. WHERE CALLED FOR, USE 2 OR 3 POLE BREAKERS. TYING SINGLE POLE BREAKERS TOGETHER TO CREATE A 2 OR 3 POLE BREAKER IS PROHIBITED.
8. ALL EXTERIOR ILLUMINATION FOR THE BUILDING AND ALL OF THE AREA SITE LIGHTING SHALL BE CONTROLED AS INDICATED ON RISER DIAGRAM.
9. CONTRACTOR IS RESPONSIBLE FOR COORDINATING WITH THE UTILITY COMPANY PRIOR TO BID TO ESTABLISH REQUIREMENTS FOR SERVICE AND TO IDENTIFY MATERIALS AND EQUIPMENT WHICH SHALL BE PROVIDED BY CONTRACTOR AND WHICH SHALL BE PROVIDED BY THE UTILITY COMPANY.
10. THE BIDDER SHALL VISIT THE SITE OF THE PROPOSED WORK AND SHALL FULLY INFORM HIMSELF REGARDING THE FACILITIES. NO ADDITIONAL COMPENSATION WILL BE ALLOWED FOR WORK OR MATERIALS OMITTED FROM BIDDER'S CONTRACT PROPOSAL DUE TO HIS FAILURE TO INFORM HIMSELF BY SUCH INVESTIGATION.
11. THE ELECTRICAL CONTRACTOR SHALL GUARANTEE AGAINST DEFECTS IN ANY OR ALL MATERIALS, EQUIPMENT, OR WORKMANSHIP COVERED BY THE ELECTRICAL SPECIFICATIONS, EXCEPT SUCH MATERIALS, EQUIPMENT, OR WORKMANSHIP FURNISHED BY OTHERS AND SHALL MAKE GOOD, REPAIR, OR REPLACE, AT HIS OWN EXPENSE, ANY DEFECTIVE WORK, MATERIAL OR PART WHICH MAY BECOME EVIDENT WITHIN A PERIOD OF ONE YEAR AFTER FINAL ACCEPTANCE OF THE WORK. NECESSARY SERVICE AND ADJUSTMENT DURING THE EARLY STAGES OF OPERATION AFTER OCCUPANCY SHALL BE PROVIDED BY THE CONTRACTOR WITHOUT ADDITIONAL COST TO THE OWNER.
12. ALL ELECTRICAL EQUIPMENT, CONDUIT, HANGERS, ECT. IN MECHANICAL ROOMS AND FENCED OUT AREAS CAN BE EXPOSED. HIDE ALL CONDUIT, HANGERS, EQUIPMENT FROM SIGHT OF THE GENERAL PUBLIC, NO EXCEPTIONS UNLESS PERMITTED BY ENGINEER IN WRITTING.
13. TXDOT EQUIPMENT REQUIREMENT;
    A. WHERE APPLICABLE, ALL LAMPS USED ON THIS PROJECT SHALL BE OF THE TOXIC CHARACTERISTIC LEACHATE PROCEDURE (TCLP) LOW MERCURY TYPE.
    B. WHERE APPLICABLE, ALL LAMPS SCHEDULED FOR REPLACEMENT, EITHER BY DEMOLITION OR MAINTENANCE, SHALL BE HELD AND DISPOSED OF IN ACCORDANCE WITH THE UNIVERSAL WASTE RULE.
14. CONTRACTOR SHALL ALLOW FOR COORDINATION MEASURES AND QUALIFIED TECHNICIAN MAN HOURS FOR LIGHT FIXTURE ALIGNMENT AND ADJUSTMENTS AS NECESSARY UNTIL THE OWNER IS SATISFIED.
15. INDEPENDENTLY SUPPORT ALL LIGHT FIXTURES MOUNTED IN CEILING GRID FROM ABOVE BUILDING STRUCTURE AT ALL FOUR CORNERS. ROUND FIXTURES SHALL BE SUPPORTED IN TWO PLACES.
16. SLEEVE ALL WALL PENETRATIONS WITH SLEEVE 2 PIPE SIZES LARGER THAN PENETRATING PIPE. SLEEVE AND PENETRATING PIPE SHALL BE CONSTRUCTED FROM THE SAME MATERIAL. MAINTAIN INSULATION THROUGH SLEEVES.
17. FIRE CAULK ALL PENETRATIONS WHERE ARCHITECTURAL PLANS CALL FOR FIRE RATED CONSTRUCTION WALLS. STOP INSULATION SHORT OF SLEEVE FILL ANNULAR SPACES WITH FIRE RATED CAULK.

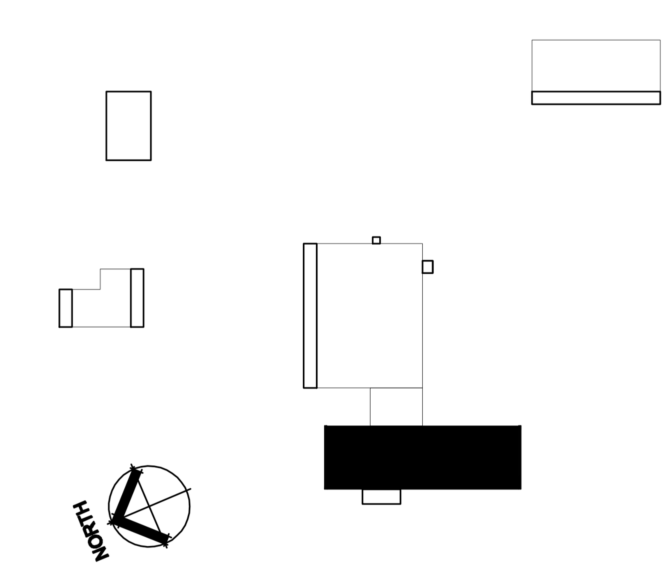

KEY PLAN

LIGHTING PLAN - OFFICE BUILDING

NOTE: THIS DRAWING WAS CREATED FOR PRODUCTION ON 22" x 34" SHEET SIZE. DO NOT SCALE PRINTS.

Texas Department of Transportation
125 E. 11th Street
Austin, Texas 78701-2483
(512) 416-2055
Copyright © 2005 Texas Department of Transportation

THIS DOCUMENT IS RELEASED FOR THE PURPOSE OF INFORMATION ONLY NOT FOR REGULATORY APPROVAL, PERMITTING, OR CONSTRUCTION.

WACO AREA ENGINEER AND MAINTENANCE FACILITY
WACO, MCLENNAN COUNTY
WACO DISTRICT

Revisions

Drawn by: CON
Project No. CBC4704-00672
Date 05.21.2007
Sheet No.

E2.1
of 15 E sheets

Plotted: Fri, Aug. 07, 2009 @ 1:18 PM By: MBAZAN

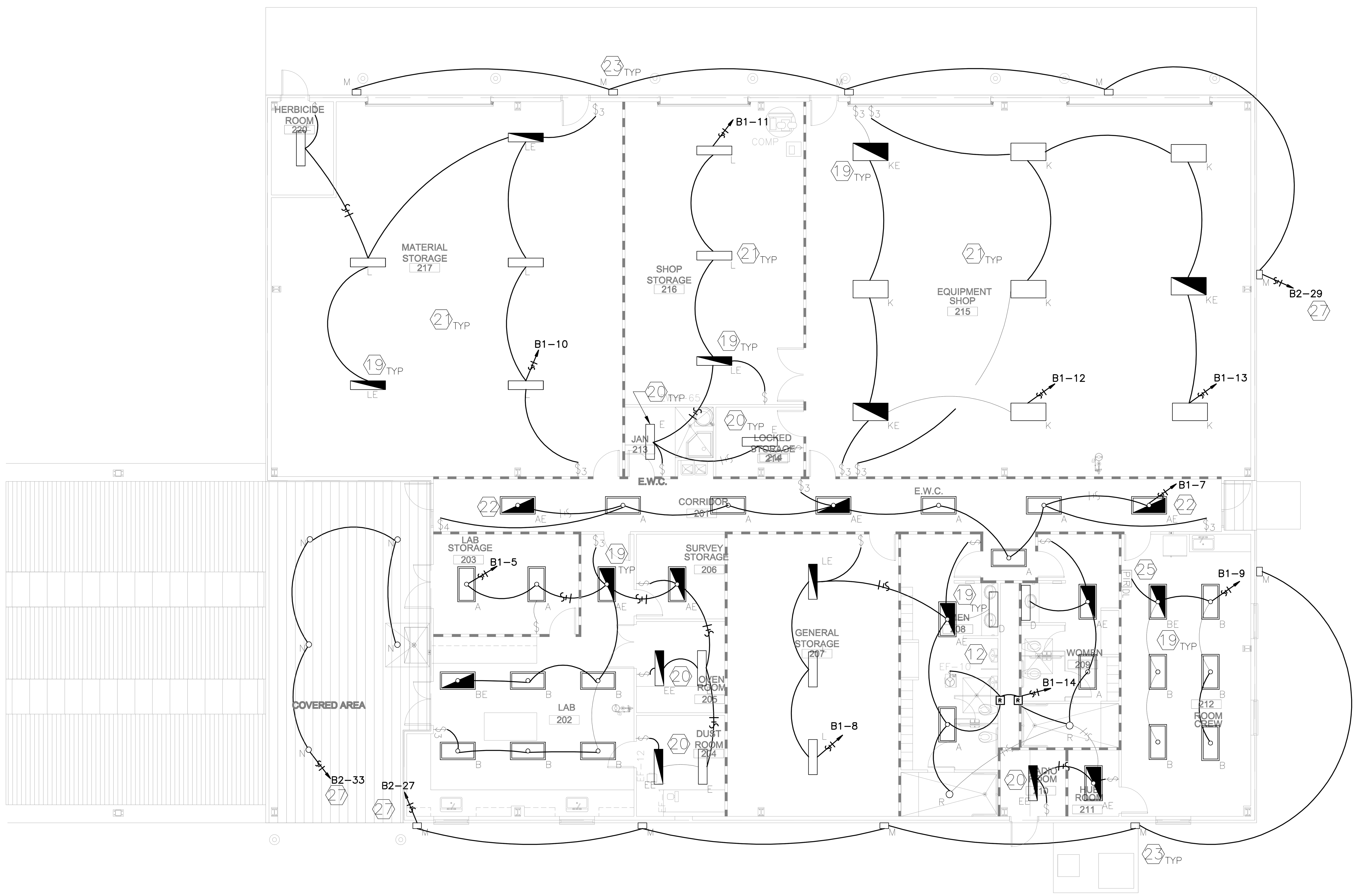

1 LIGHTING PLAN - LAB/SHOP BUILDING
SCALE: 1/8" = 1'-0"

SEE E2.1 FOR GENERAL AND KEYED NOTES

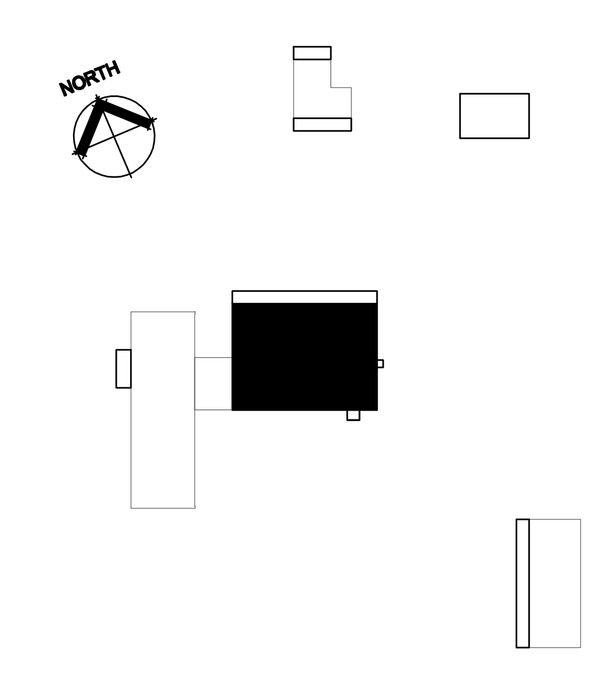

KEY PLAN

Texas Department of Transportation
125 E. 11th Street
Austin, Texas 78701-2483
(512) 416-2048
Copyright © 2005 Texas Department of Transportation

THIS DOCUMENT IS RELEASED FOR THE PURPOSE OF INFORMATION ONLY
NOT FOR REGULATORY APPROVAL, PERMITTING, OR CONSTRUCTION.

WACO AREA ENGINEER AND MAINTENANCE FACILITY
WACO, MCLENNAN COUNTY
WACO DISTRICT

Revisions

Drawn by: CON
Project No. CBC4704-00672
Date 05.21.2007
Sheet No.
E2.2
of 15 E sheets

LIGHTING PLAN - LAB/SHOP BUILDING

NOTE: THIS DRAWING WAS CREATED FOR PRODUCTION ON 22" x 34" SHEET SIZE. DO NOT SCALE PRINTS.

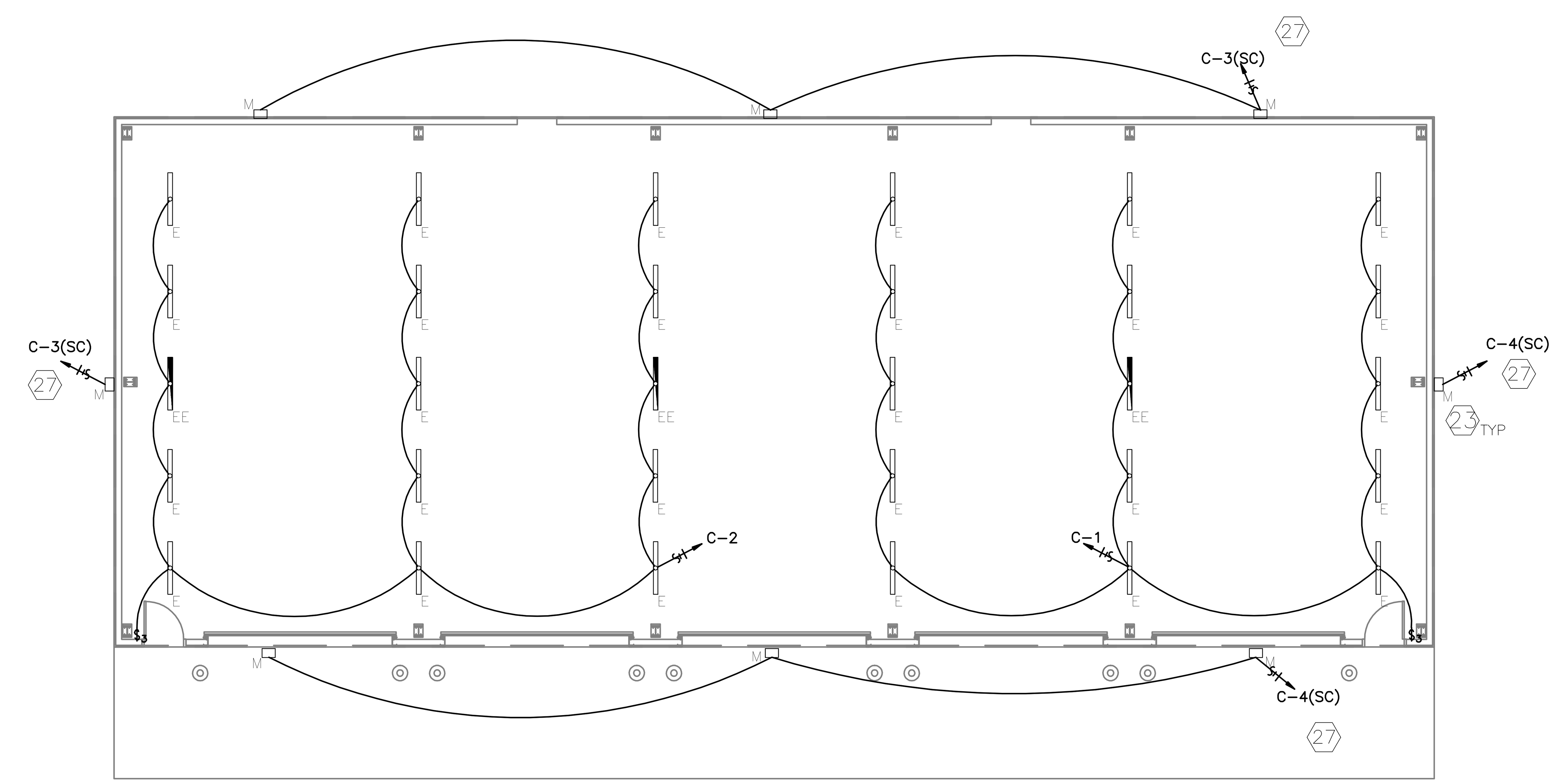

1 LIGHTING PLAN VEHICLE STORAGE BUILDING

SCALE: 1/8" = 1'-0"

0' 2' 4' 8' 16'

SEE E2.1 FOR GENERAL AND KEYED NOTES

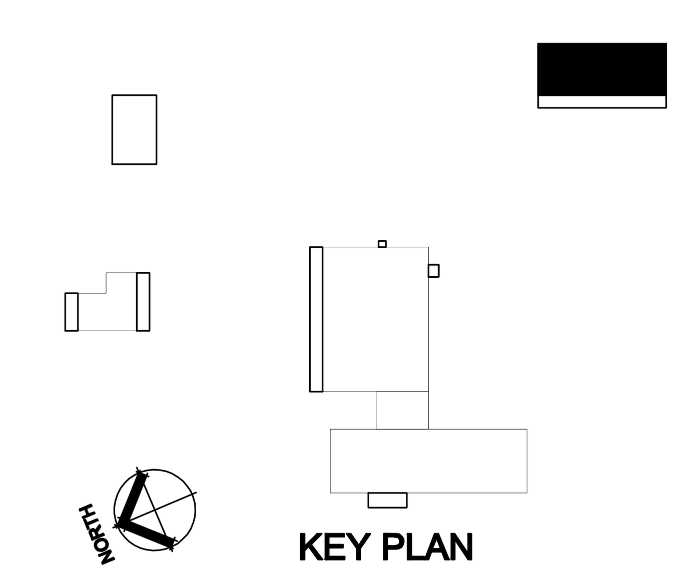

KEY PLAN

Texas Department of Transportation
125 E. 11th Street
Austin, Texas 78701-2483
(512) 416-3046

Copyright © 2005 Texas Department of Transportation

THIS DOCUMENT IS RELEASED FOR THE PURPOSE OF INFORMATION ONLY
NOT FOR REGULATORY APPROVAL, PERMITTING, OR CONSTRUCTION.

WACO AREA ENGINEER AND MAINTENANCE FACILITY
WACO, MCLENNAN COUNTY
WACO DISTRICT

Revisions

Drawn by: CON
Project No. CBC4704-00672
Date 05.21.2007
Sheet No.

E2.3
of 15 E sheets

LIGHTING PLAN - VEHICLE STORAGE BUILDING

NOTE: THIS DRAWING WAS CREATED FOR PRODUCTION ON 22" x 34" SHEET SIZE. DO NOT SCALE PRINTS.

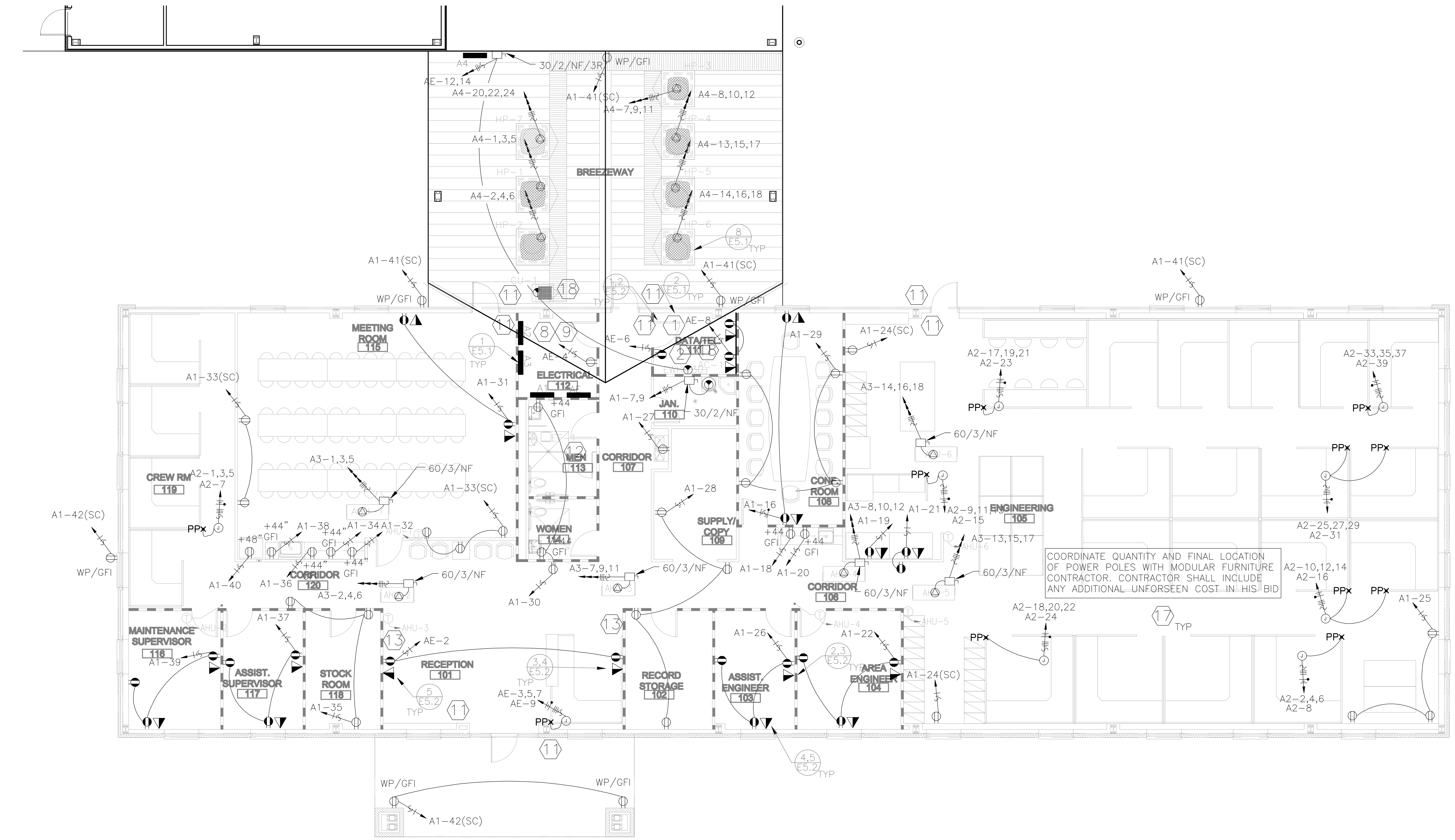

1 POWER PLAN OFFICE BUILDING
SCALE: 1/8" = 1'-0"

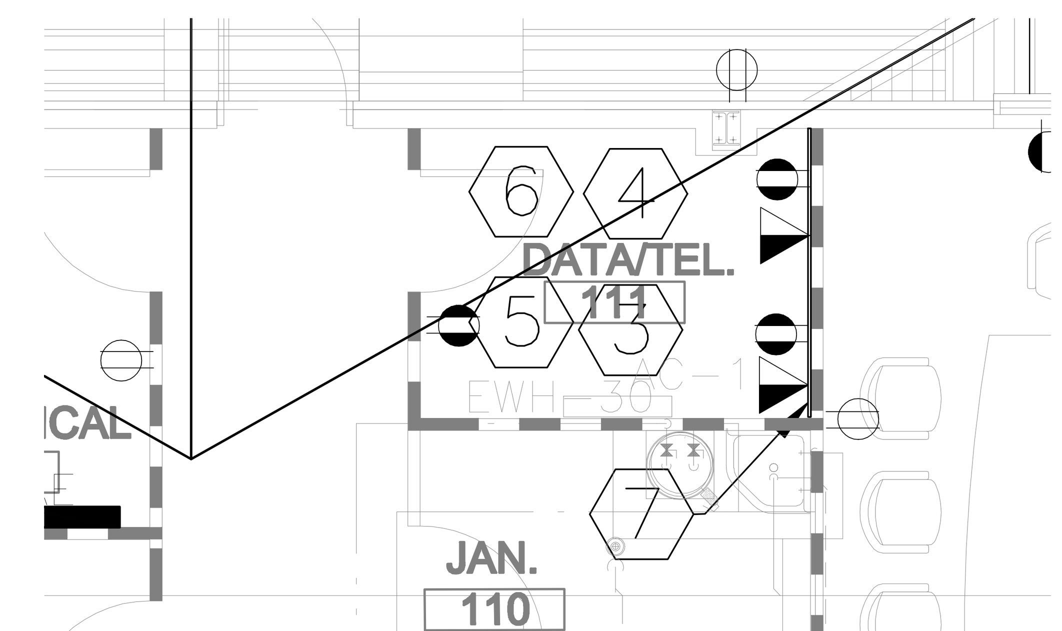

MODULAR FURNITURE WIRE STANDARD				
MODULAR FURNITURE POWER (4 CIRCUIT 3+D, 8 WIRES)				
PHASE	SIZE	COLOR	INSULATION	FUNCTION
A	#12	RED	RED #12 AWG THWN/THHN	HOT 1
B	#12	BLACK	BLACK #12 AWG THWN/THHN	HOT 2
C	#12	BLUE	BLUE #12 AWG THWN/THHN	HOT 3
NEUT.	#10	WHITE	WHITE #10 AWG THWN/THHN	OVER-SIZED NEUTRAL
GND.	#12	GREEN	GREEN #12 AWG THWN/THHN	GROUND
A,B,OR C	#12	PINK	PINK #12 AWG THWN/THHN	HOT 4
NEUT.	#12	GREY	GREY #12 AWG THWN/THHN	NEUTRAL
GND.	#12	GREEN / YELLOW	GREEN AND YELLOW #12 AWG THWN/THHN	ISOLATED GROUND

NOTE: WIRE SIZES ARE MINIMUM. WHERE HOMERUNS EXCEED 100FT IN LENGHT #12 CONDUCTORS SHALL BECOME #10 AND #10 CONDUCTORS SHALL BECOME #8.

NOTE:
PROVIDE AN ENGRAVED, LAMINATED NAMEPLATE FOR EACH NEW OR EXISTING DISCONNECT, PANELBOARD, CIRCUIT BREAKER ENCLOSURE, TRANSFORMER, RECEPTACLE FACE PLATE OR OTHER ELECTRICAL ENCLOSURE. THIS NAMEPLATE SHALL STATE THE DEVICES NAME, VOLTAGE, & PHASE AND STATE THAT THE DEVICE IS FED FROM THE EMERGENCY DISTRIBUTION SYSTEM. THIS NAMEPLATE SHALL ALSO STATE WHERE THE DEVICE FEEDS FROM. FOR EXAMPLE FOR PANEL N-1H-E THE NAMEPLATE WOULD READ:
EMERGENCY PANEL N-1H-E
480 VOLT, 3-PHASE
FEEDS FROM EMERGENCY PANEL ME

SEE E2.1 FOR GENERAL AND KEYED NOTES

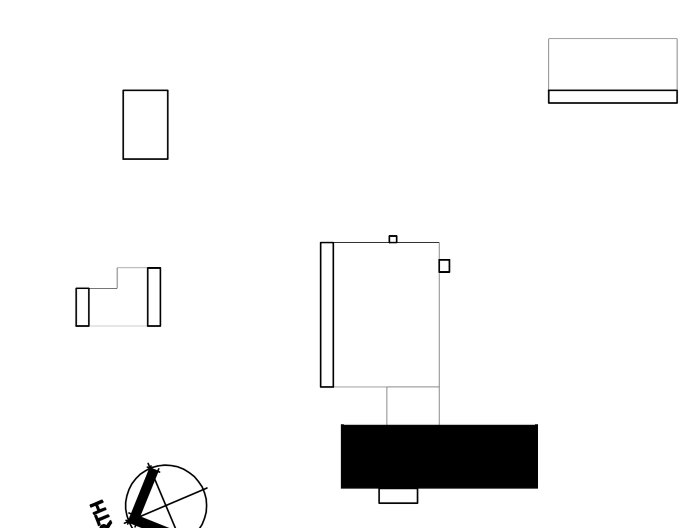

KEY PLAN

POWER PLAN - OFFICE BUILDING

NOTE: THIS DRAWING WAS CREATED FOR PRODUCTION ON 22" x 34" SHEET SIZE. DO NOT SCALE PRINTS.

Texas Department of Transportation
125 E. 11th Street
Austin, Texas 78701-2483
(512) 416-3048
Copyright © 2005 Texas Department of Transportation

THIS DOCUMENT IS RELEASED FOR THE PURPOSE OF
INFORMATION ONLY
NOT FOR REGULATORY
APPROVAL, PERMITTING,
OR CONSTRUCTION.

WACO AREA ENGINEER AND MAINTENANCE FACILITY
WACO, MCLENNAN COUNTY
WACO DISTRICT

Revisions

Drawn by:
CON
Project No.
CBC4704-00672
Date
05.21.2007
Sheet No.

E2.4
of 15 E sheets

CADFILE: T:\MNT\MD\2\TWC\BC4704-00-537\02-7-47040057\Acad\prototypical prelim\waco\Acad\MEP\ELEC\E2_1 and E2_4.dwg Plotted: Fri, Aug. 07, 2009 @ 1:18 PM By: MBAZAN

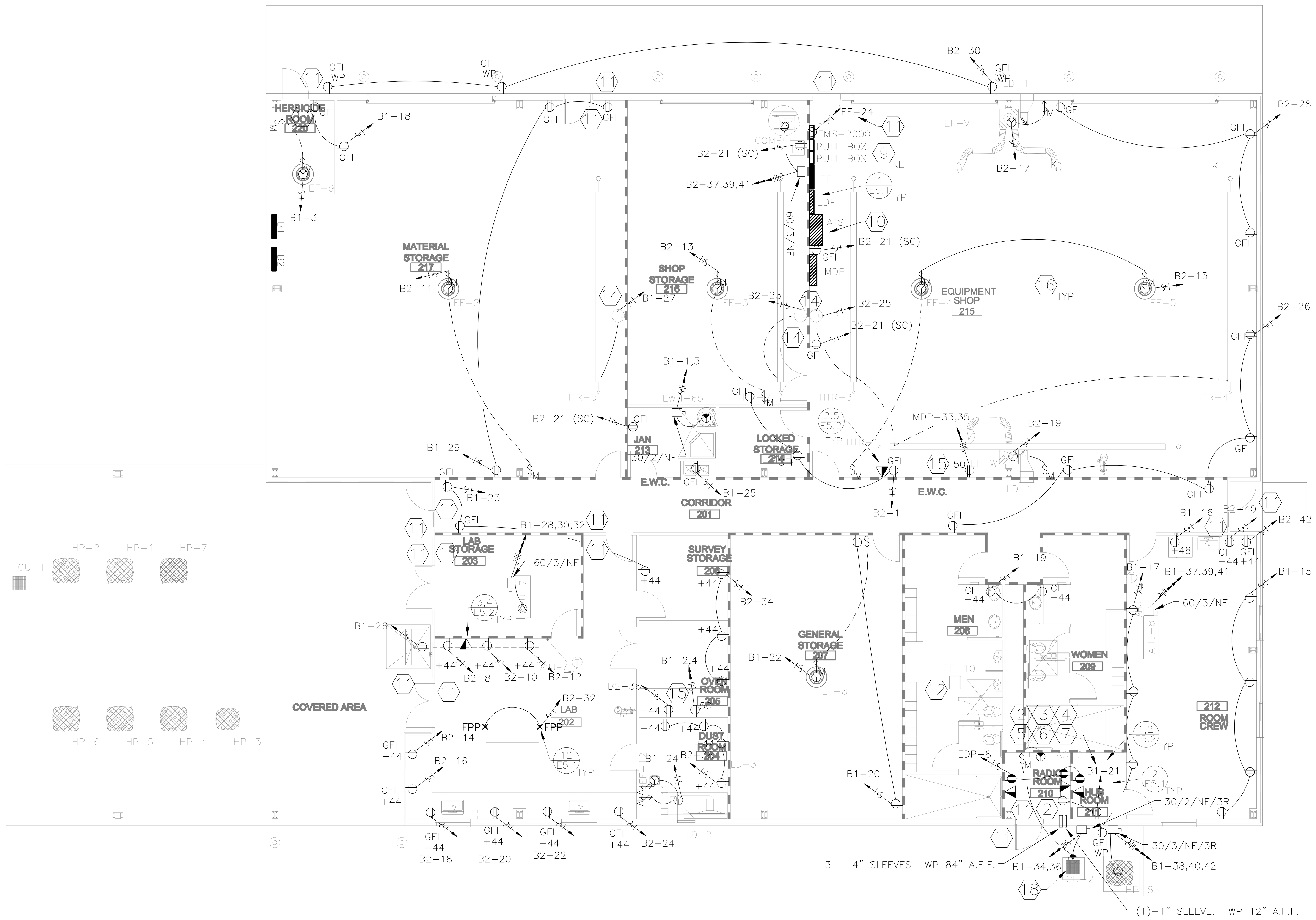

1 POWER PLAN - LAB/SHOP BUILDING

SCALE: 1/8" = 1'-0"

0' 2' 4' 8' 16'

SEE E2.1 FOR GENERAL AND KEYED NOTES

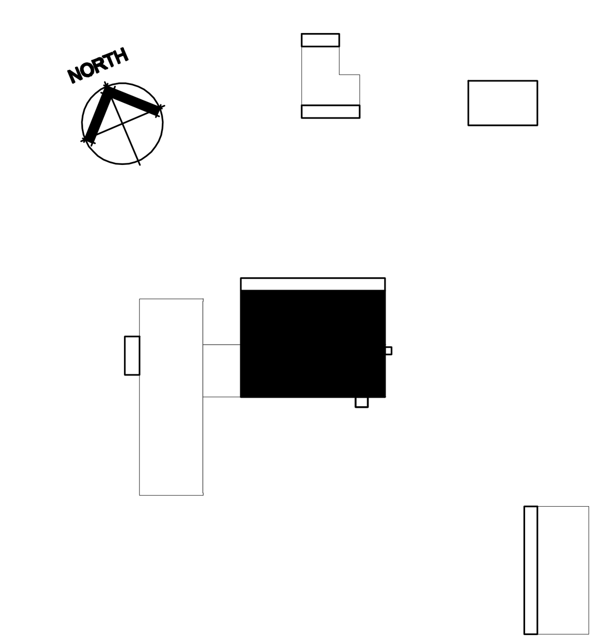

KEY PLAN

Texas Department of Transportation

THIS DOCUMENT IS RELEASED FOR THE PURPOSE OF INFORMATION ONLY NOT FOR REGULATORY APPROVAL, PERMITTING, OR CONSTRUCTION.

WACO AREA ENGINEER AND MAINTENANCE FACILITY

WACO, MCLENNAN COUNTY

WACO DISTRICT

Revisions

Drawn by: CON

Project No. CBC4704-00672

Date 05.21.2007

Sheet No.

E2.5

of 15 E sheets

POWER PLAN - LAB/SHOP BUILDING

NOTE: THIS DRAWING WAS CREATED FOR PRODUCTION ON 22" x 34" SHEET SIZE. DO NOT SCALE PRINTS.

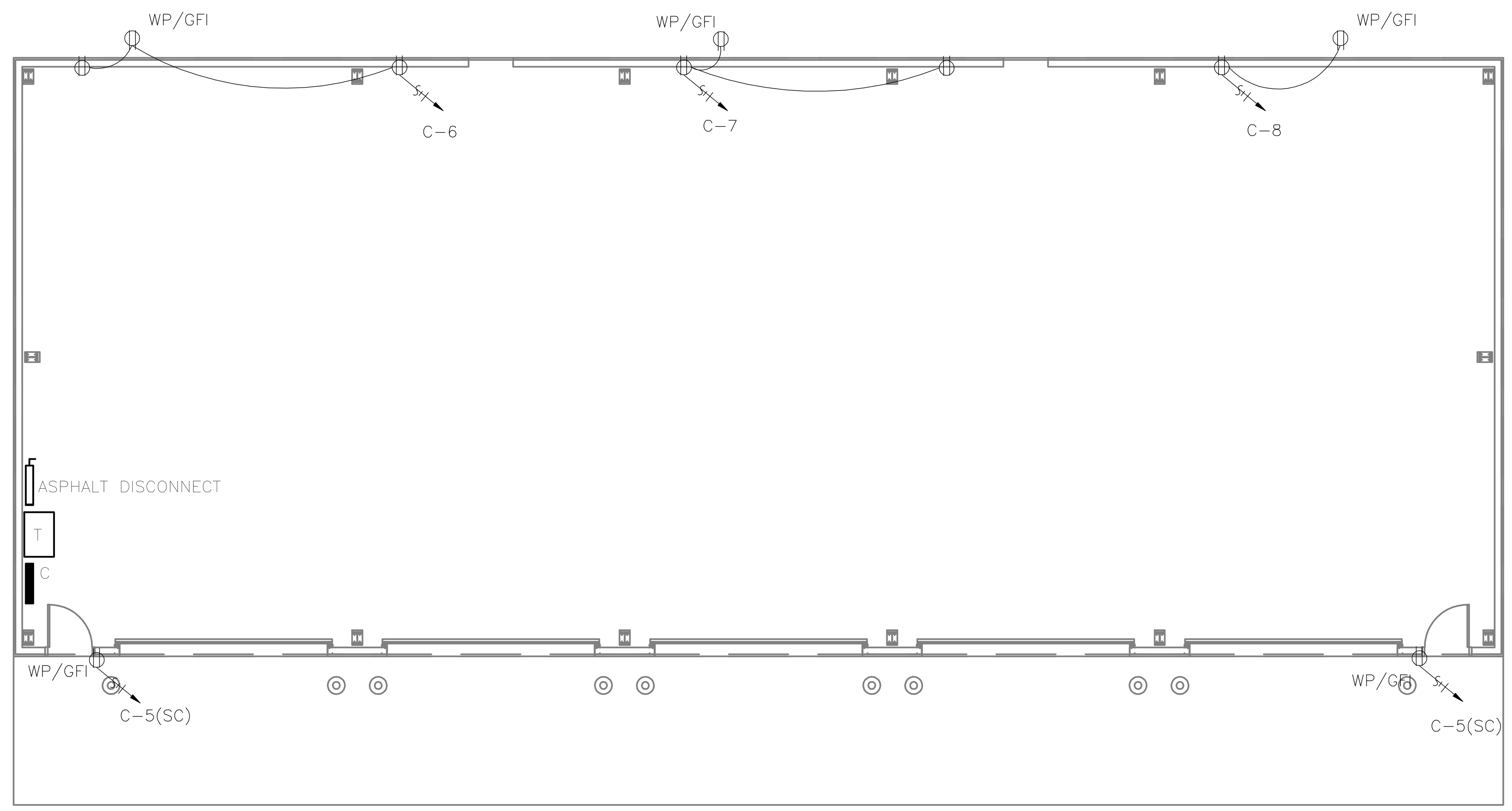

1 POWER PLAN VEHICLE STORAGE BUILDING
SCALE: 1/8" = 1'-0"

0' 2' 4' 8' 16'

SEE E2.1 FOR GENERAL AND KEYED NOTES

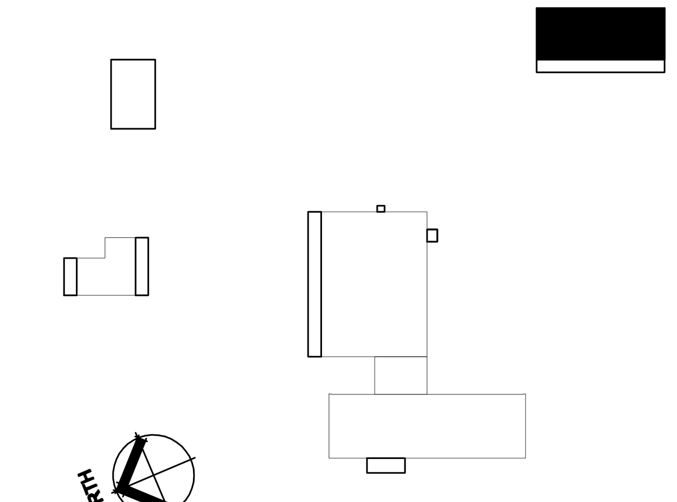

KEY PLAN

POWER PLAN - VEHICLE STORAGE BUILDING

NOTE: THIS DRAWING WAS CREATED FOR PRODUCTION ON 22" x 34" SHEET SIZE. DO NOT SCALE PRINTS.

Texas Department of Transportation
125 E. 11th Street
Austin, Texas 78701-2483
(512) 416-3068

Copyright © 2005 Texas Department of Transportation

THIS DOCUMENT IS RELEASED FOR THE PURPOSE OF INFORMATION ONLY
NOT FOR REGULATORY APPROVAL, PERMITTING, OR CONSTRUCTION.

WACO AREA ENGINEER AND MAINTENANCE FACILITY
WACO, MCLENNAN COUNTY
WACO DISTRICT

Revisions

Drawn by:
CON
Project No.
CBC4704-00672
Date
05.21.2007
Sheet No.

E2.6

of 15 E sheets

CADFILE: ... Plotted: Fri, Aug. 07, 2009 @ 1:21 PM By: MBAZAN

SEE E2.1 FOR GENERAL AND KEYED NOTES

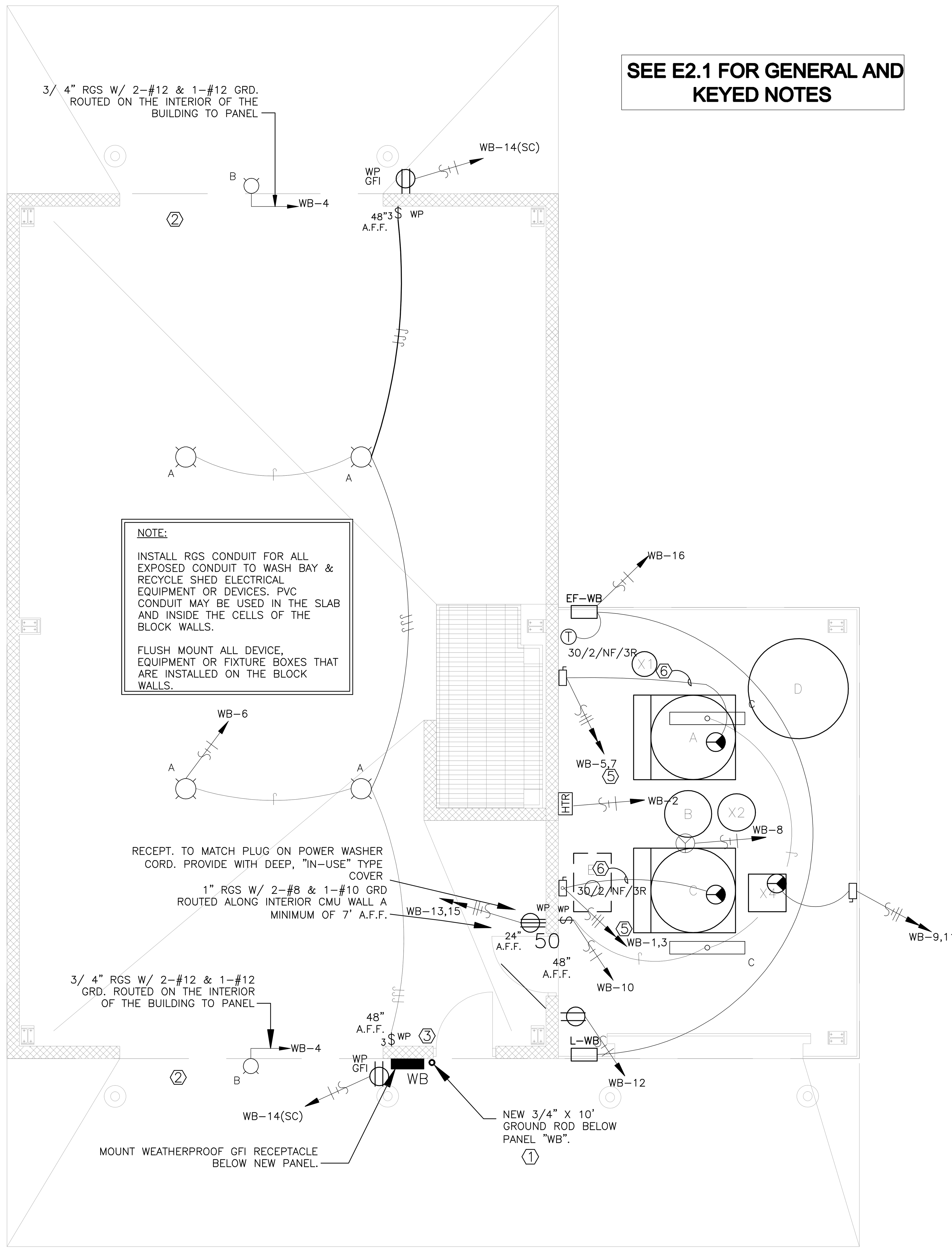

1 ELECTRICAL PLAN - WASH BAY
SCALE: 1/4" = 1'-0"

WASHBAY ELECTRICAL KEYNOTES -

1. NEW 3/4" X 10' GROUND ROD BELOW PANEL "WB". INSTALL A #6 AWG COPPER GROUNDING ELECTRODE CONDUCTOR FROM THE GROUND ROD TO THE GROUND BUSS IN PANEL "WB". ATTACH THIS #6 AWG TO THE GROUND ROD W/ A DEDICATED GROUND ROD CLAMP. FROM ANOTHER DEDICATED GROUND ROD CLAMP ON THIS NEW GROUND ROD, INSTALL A #6 AWG INSULATED, COPPER CONDUCTOR AND CONNECT IT TO THE BUILDING STEEL STRUCTURE AT THE BASE OF A STEEL COLUMN. CONNECT TO THE BUILDING STEEL COLUMN USING AN EXOTHERMIC CONNECTION. FROM A THIRD DEDICATED CLAMP, INSTALL A #6 AWG INSULATED, COPPER CONDUCTOR AND CONNECT IT TO THE NEW COPPER WATER LINE TO THE WASH BAY.
2. CONDUIT INSTALLED ABOVE AND AROUND THE LARGE CASED DOOR OPENINGS SHALL BE ROUTED SO THAT IT WILL NOT INTERFERE WITH THE FUTURE INSTALLATION OF OVERHEAD DOORS AND ELECTRIC DOOR OPERATORS.
3. LOAD CONDUITS ROUTED OUT OF PANEL WB SHALL BE ROUTED INSIDE THE BUILDING TO GET TO THE VARIOUS LOADS AND DEVICES IN THE BUILDING. DO NOT ROUTE CONDUIT AROUND THE OUTSIDE OF THE BUILDING.
4. NOT USED.
5. ROUTE THE RGS FEEDER CONDUIT TO THE RECYCLE SYSTEM A MINIMUM OF 7' A.F.F. AND PROPERLY SUPPORT ON THE BUILDING CMU WALLS WITH CONDUIT STRAPS.
6. NEW 3/4" RGS CONDUIT W/ 3-#10 & 1-#10 GROUND OVERHEAD FROM TOP OF DISCONNECT SWITCH INTO RECYCLE SYSTEM. ROUTE & PROPERLY SUPPORT THIS CONDUIT A MINIMUM OF 8' A.F.F.

WASHBAY-CHASE HEATER SCHEDULE

MARK	WATTS	ELECTRICAL V/HZ/PH	REMARKS
HTR	1500	120/60/1 (12.5 AMPS)	GRAINGER STOCK #5ZK68, WALL MOUNTED SPACE HEATER WITH BUILT-IN THERMOSTAT AND TEMPERATURE CONTROL. INSTALL IN SURFACE MOUNT HOUSING KIT.

WASHBAY-LIGHTING FIXTURE SCHEDULE

TYPE	MANUFACTURER AND MODEL NUMBER	VOLTAGE	LAMPS	NOTES	WATTS
A	LITHONIA TXS-250M-A30-120, LOWBAY TYPE, CAST ALUMINUM HOUSING W/ TOTALLY ENCLOSED & GASKETED ALUMINUM REFLECTOR & ACRYLIC LENS THAT IS UL 1572 COMPLIANT FOR LAMP RUPTURE CONTAINMENT. UL LISTED FOR DAMP LOCATIONS.	120	1-250W METAL HALIDE	PENDANT MOUNT FROM METAL BUILDING ROOF STRUCTURE USING 3/4" RGS STEM W/ BOTTOM OF FIXTURE AT 18' A.F.F. DO NOT SUPPORT ONLY FROM METAL ROOF PANEL.	294
B	LITHONIA TWH-175M-120-PE-D**, WALPAK TYPE, CAST ALUMINUM HOUSING, PRISMATIC GLASS REFRACTOR, WITH PHOTOCELL, UL LISTED FOR WET LOCATIONS, FINISH: FIXTURE COLOR TO BE SELECTED BY OWNER.	120	1-175W METAL HALIDE	MOUNT ON METAL BUILDING SIDING W/ CENTER OF FIXTURE @ APPROX. 16' A.F.F. ADD VERTICAL STEEL MEMBERS OR CHANNEL STRUT INSIDE THE BUILDING TO SUPPORT THE FIXTURES FROM THE INTERIOR HORIZONTAL GIRTS. DO NOT SUPPORT THE FIXTURES SOLELY FROM THE METAL BUILDING SIDING.	215
C	LITHONIA DM-2-32-120 ENCLOSED FLUORESCENT FIXTURE W/ FIBERGLASS HOUSING, ACRYLIC DIFFUSER, CHAIN HANG FROM STRUCTURE W/ BOTTOM OF FIXTURE AT APPROX. 10'-0" A.F.F. UL LISTED FOR DAMP LOCATIONS.	120	2-32 W. T-8 FLUORESCENT	CHAIN HANG FIXTURES FROM ROOF PURLINS. HANG FIXTURES LEVEL. DO NOT SUPPORT THE FIXTURES SOLELY FROM THE METAL BUILDING ROOFING.	62

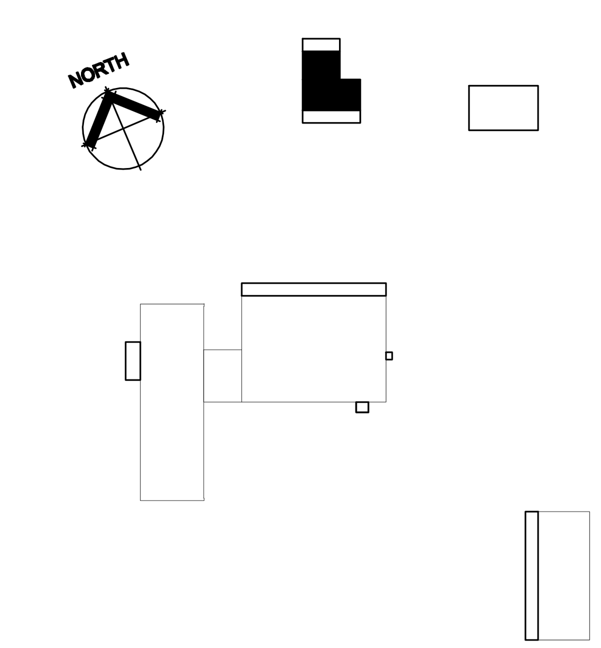

KEY PLAN

Texas Department of Transportation

THIS DOCUMENT IS RELEASED FOR THE PURPOSE OF INFORMATION ONLY
NOT FOR REGULATORY APPROVAL, PERMITTING, OR CONSTRUCTION.

WACO AREA ENGINEER AND MAINTENANCE FACILITY
WACO, MCLENNAN COUNTY
WACO DISTRICT

Revisions
Drawn by: CON
Project No. CBC4704-00672
Date 05.21.2007
Sheet No. E2.7 of 15 E sheets

ELECTRICAL PLAN - WASH BAY

NOTE: THIS DRAWING WAS CREATED FOR PRODUCTION ON 22" x 34" SHEET SIZE. DO NOT SCALE PRINTS.

LIQUID PETROLEUM GAS DETECTION LEGEND & SCHEDULE			
MARK	ZONES	MANUFACTURER, MODEL/SIZE	DESCRIPTION
GM	1	ARMSTRONG, AMC-1022D-2	MULTI-DROP GAS MONITORING SYSTEM WITH A HIGH AND A LOW ALARM 120 V, 10 AMP RELAY. SUPPLY VOLTAGE 120 VAC, 60 HZ. FEATURING LED LOW, HIGH, AND FAIL INDICATION. INTERCONNECT EXHAUST FANS AND STROBE WARNING LIGHTS (SEE ELECTRICAL). INSTALL PER MANUFACTURER'S RECOMMENDATIONS.
S	-----	ARMSTRONG, AMC-1225 COMBUSTIBLE GAS	MULTI-DROP GAS SENSOR MODULE COMPATIBLE WITH AMC-1022D. SENSORS SHALL BE DAISY CHAINED TOGETHER. LEAVE THE TERMINATING JUMPER ON THE END SENSOR UNIT. SENSOR IS SOLID STATE, 0 - 50% LEL, PVC ENCLOSURE. MOUNT ALL SENSORS 18" ABOVE FINISHED FLOOR.
WL	-----	FEDERAL SIGNAL CORPORATION, ELECTRAFLASH MODEL#141ST-120A	"ELECTRAFLASH" STROBE WARNING LIGHT FEDERAL SIGNAL GRAINGER #3T948 LENS COLOR BLUE 120 VAC 0.06 AMPS. COMPLETE WITH MOUNTING KIT, GRAINGER #5T588. MOUNT LIGHTS 10 FT ABOVE FINISHED GRADE.
S	-----	FEDERAL SIGNAL CORPORATION, MODEL A-120 ELECTRIC SIREN, 120 VAC/DC, RED	GENERAL PURPOSE ELECTRO-MECHANICAL SIREN FOR INDUSTRIAL APPLICATIONS. 120VAC 1.8 AMPS. EQUIPPED WITH AN INTERNAL FAN, METAL HOUSING, RATED AT 108dB @ 10'.

GAS DETECTION KEYED NOTES -

1. MOUNT SENSORS 18" A.F.F. DAISY CHAIN SENSORS TOGETHER.
2. MOUNT GAS MONITOR 48 A.F.F.
3. UNLESS OTHERWISE NOTED, ALL HOME RUNS SHALL BE 3 # 12 THHN, 3/4" EMT CONDUIT.
4. ALL SENSOR CONNECTIONS SHALL BE 3 # 18 SHEILD, 1/2" EMT CONDUIT.
5. MOUNT STROBE LIGHTS AND SIRENS 10FT A.F.F..

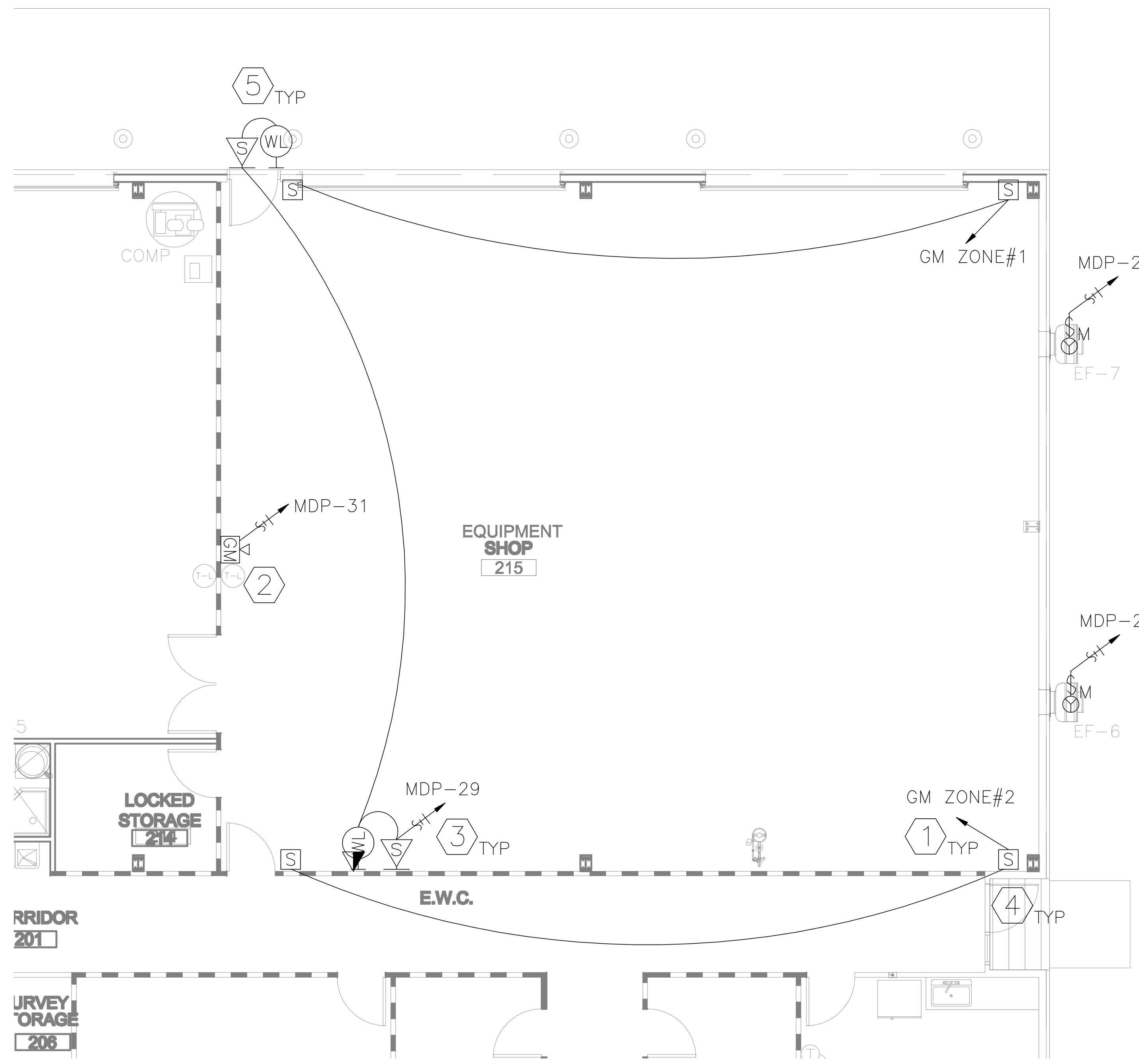

1 GAS DETECTION PLAN KEY PLAN BLDG. #1
SCALE: 1/8" = 1'-0"

0' 2' 4' 8' 16'

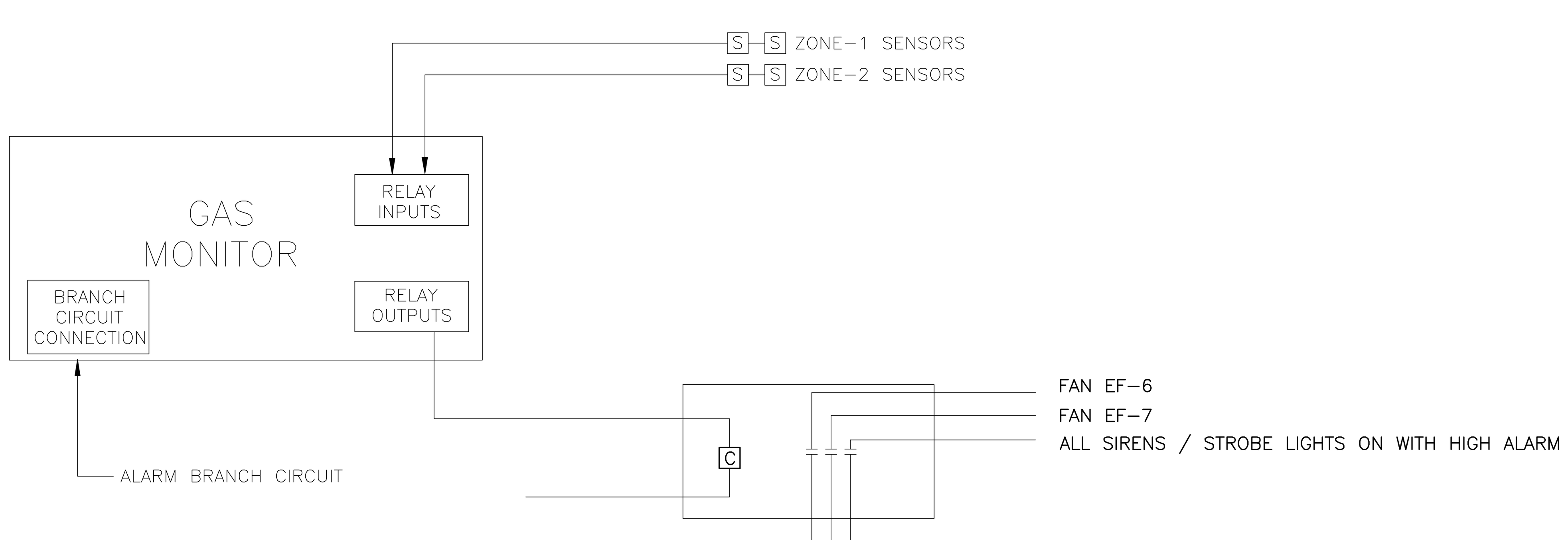

2 LPG GAS DECTECTION RISER
SCALE: NOT TO SCALE

SEE E2.1 FOR GENERAL AND KEYED NOTES

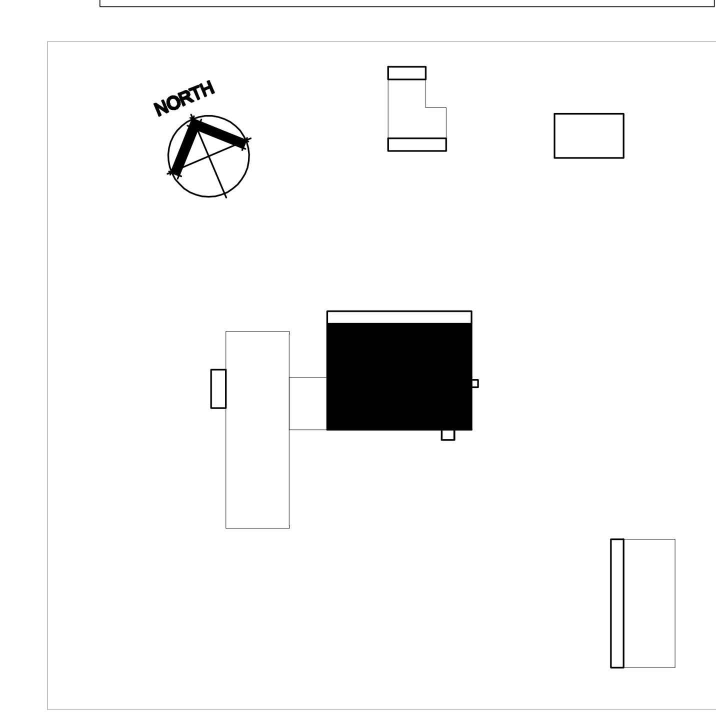

KEY PLAN

Texas Department of Transportation
125 E. 11th Street
Austin, Texas 78701-2483
(512) 416-3848

Copyright © 2005 Texas Department of Transportation

THIS DOCUMENT IS RELEASED FOR THE PURPOSE OF INFORMATION ONLY
NOT FOR REGULATORY APPROVAL, PERMITTING, OR CONSTRUCTION.

WACO AREA ENGINEER AND MAINTENANCE FACILITY
WACO, MCLENNAN COUNTY
WACO DISTRICT

Revisions

Drawn by: CON
Project No. CBC4704-00672
Date 05.21.2007
Sheet No.

E2.8
of 15 E sheets

GAS DETECTION PLAN - LAB/SHOP BUILDING

NOTE: THIS DRAWING WAS CREATED FOR PRODUCTION ON 22" x 34" SHEET SIZE. DO NOT SCALE PRINTS.

CADFILE: ... Plotted: Fri, Aug. 07, 2009 @ 1:21 PM By: MBAZAN

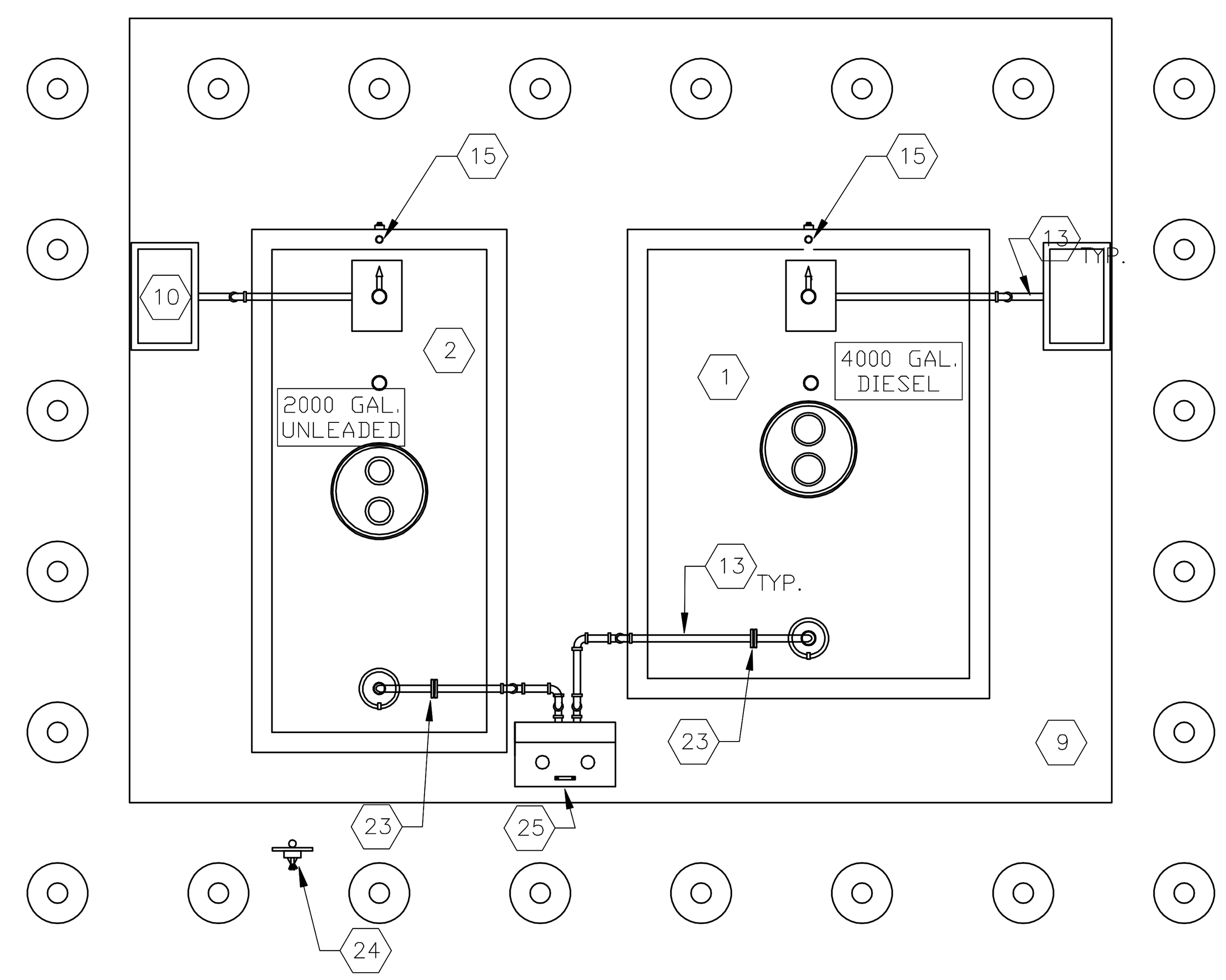

1 FUEL STATION PLAN
SCALE: 1/4" = 1'-0"

0' 1' 2' 4' 8'

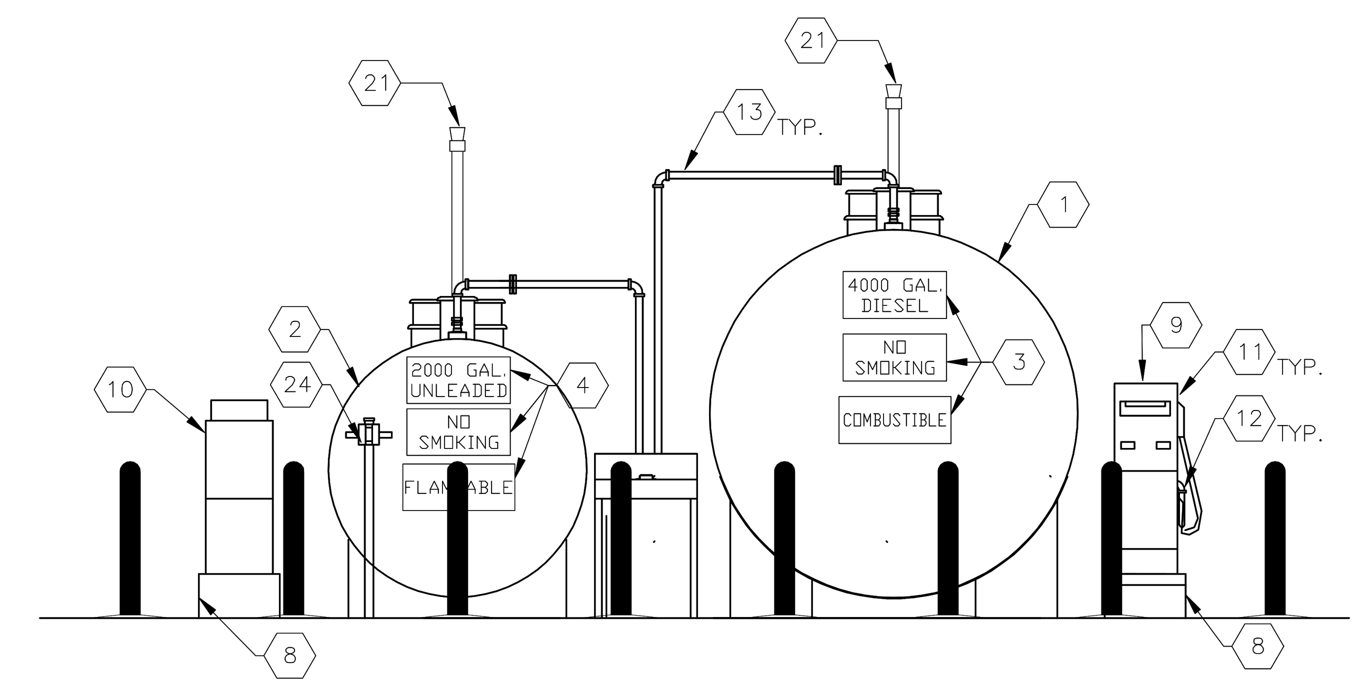

3 FUEL STATION ELEVATIONS
SCALE: 1/4" = 1'-0"

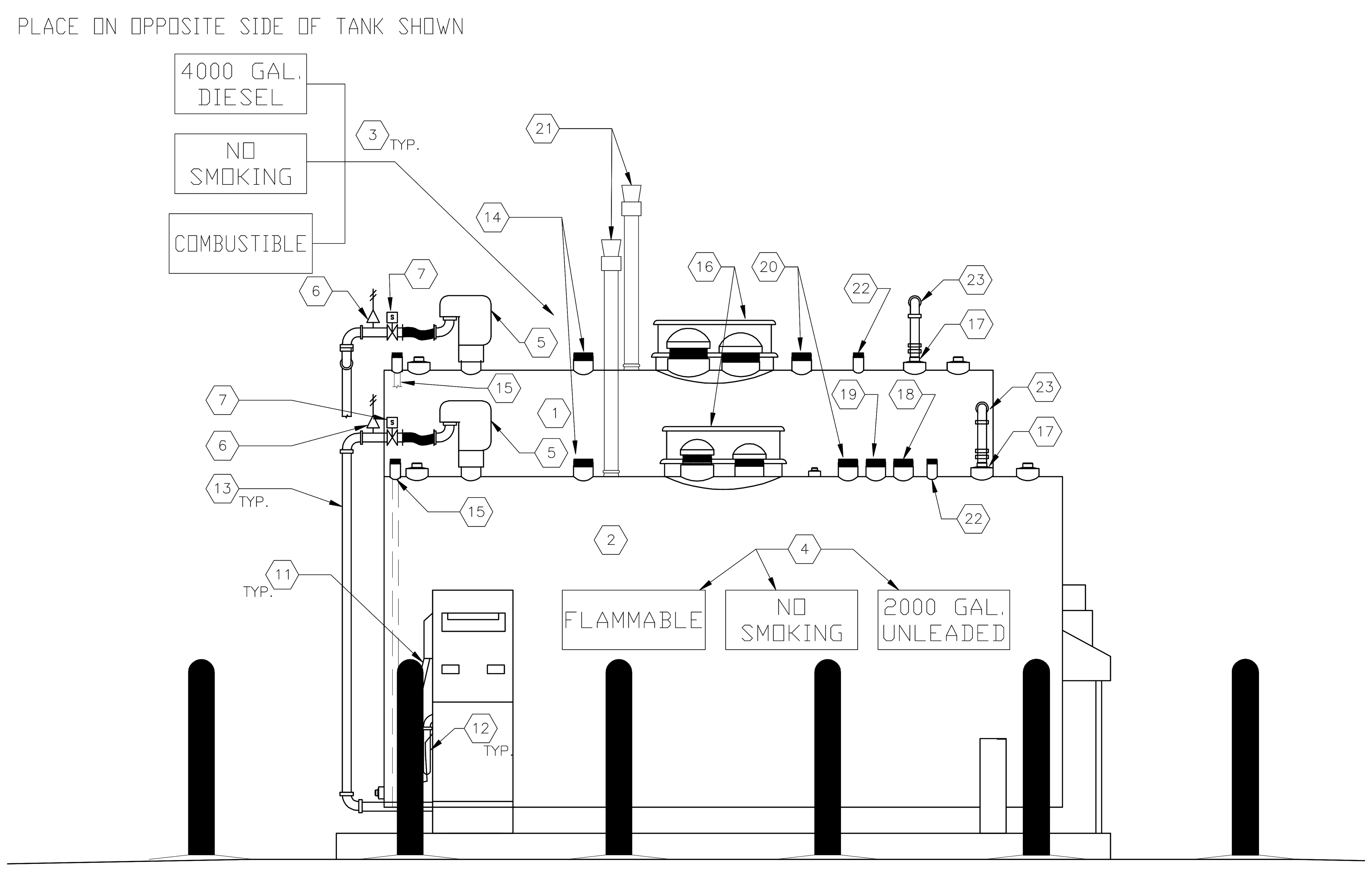

2 FUEL STATION ELEVATIONS
SCALE: 1/2" = 1'-0"

0' 1' 2' 4'

KEYED NOTE "⬡"

1. PROVIDE A 4,000 GALLON DIESEL DOUBLE WALL ROUND TANK WITH THERMAL INSULATION. FIREGAURD UL2085 OR EQUAL.
2. PROVIDE A 2,000 GALLON UNLEADED GASOLINE DOUBLE WALL ROUND TANK WITH THERMAL INSULATION. FIREGAURD UL2085 OR EQUAL.
3. PROVIDE SIGNAGE ON TANK VISIBLE FROM 100FT TO READ THE FOLLOWING, " DIESEL" , "NO SMOKING" , "COMBUSTIBLE", 4,000 GALLONS ON ALL FOUR SIDES.
4. PROVIDE SIGNAGE ON TANK VISIBLE FROM 100FT TO READ THE FOLLOWING, " UNLEADED" , "NO SMOKING" , "FLAMMABLE", 2,000 GALLONS ON ALL FOUR SIDES.
5. PROVIDE AND INSTALL A 208V/1ø 1/3 HP SUBMERSIBLE PUMP. WITH STAINLESS UL LISTED FLEXIBLE CONNECTION.
6. PROVIDE A LINE PRESSURE RELIEF VALVE.
7. PROVIDE A 2" SOLENOID VALVE MORRISON 710 SERIES.
8. PROVIDE REMOTE BASE BY BRAVO SYSTEMS B-8600 SERIES WITH SHEAR VALVE OPW#10 SERIES.
9. PROVIDE REMOTE DISPENSER BY GASBOY MODEL#9100 SERIES OR EQUAL. DESIGN FOR DISPENSING DIESEL.
10. PROVIDE REMOTE DISPENSER BY GASBOY MODEL#9100 SERIES OR EQUAL. DESIGN FOR DISPENSING UNLEADED GASOLINE.
11. PROVIDE U.L. LISTED HOSE, HOSE SWIVEL, BREAKAWAY/WHIP HOSE, AUTOMATIC NOZZLE, HOSE RETRIEVER WITH CRADLE. PROVIDING A FULLY FUNCTIONAL SYSTEM.
12. PROVIDE A PARTICULATE SPIN-OFF FILTER.
13. ALL PIPING, JOINTS, UNIONS AND FITTINGS SHALL BE 2" BLACK PIPE MEETING ASTM A-106 STANDARDS.
14. PROVIDE TANK LEVEL RIGID MONITOR PROBE BY PNEUMERCATOR MODEL#MP450S IN 4" NIPPLE W/ PK4 INSTALLATION CAP KIT. U4K1-UNLEADED-DUAL FLOAT KITS FOR PRODUCT AND WATER. U4K2-DIESEL-DUAL FLOAT KITS FOR PRODUCT AND WATER.
15. PROVIDE 2" MONITOR TUBE INSTALL EXTERNAL LEAK SENSOR BY PNEUMERCATOR MODEL# LS600 LDBN W/ SK2 2" INSTALLATION CAP AND ADAPTER KIT.
16. PROVIDE 6" PRIMARY EMERGENCY VENT.
17. PROVIDE 2" MECHANICAL SHUT OFF VALVE SET AT 95%, OPW 61FSTOP-1000 COMPLETE WITH OPW61FT DROP TUBE TO PROVIDE SUBMERGED FILLING.
18. PROVIDE 4" NIPPLE CAP & SEAL AND MARK FOR FUTURE STAGE 1 VAPOR RECOVERY, (UNLEADED ONLY).
19. PROVIDE 4" SPARE NIPPLE CAP & AND MARK FOR FUTURE STAGE 2 VAPOR RECOVERY, (UNLEADED ONLY).
20. PROVIDE AND INSTALL CLOCK GAUGE OPW 200TG WITH PROP TUBE.
21. PROVIDE 2" VENT CAP AND RISER. VENT SHALL TERMINATE AT LEAST 12' ABOVE FINISHED FLOOR AND AT LEAST 2' ABOVE NEAREST STRUCTURE.
22. PROVIDE A 2" STICK PORT WITH TWO TANK MEASURING STICKS.
23. PROVIDE TANK INLET SPOUT ADAPTER WITH CROSSBAR OPW #633AST-2061 AND CAM LOCK COUPLER OPW #633B-0150. PROVIDE 2" FLANGED CONNECTION AT VALVE IN THE VERTICAL PLANE.
24. PROVIDE AND INSTALL 4FT A.F.F. RACK MOUNT REMOTE AUDIBLE / VISIBLE ALARM ANNUNCIATOR BY PNEUMERCATOR MODEL#LC1002. REFER TO SHEET E2.21 FOR WIRING INSTRUCTIONS. TANK LEVEL MONITORING AND LEAK SENSING SYSTEM SHALL TRIGGER THE REMOTE ANNUNCIATOR TO SEND AN AUDIBLE/VISIBLE ALARM WITH A RED LIGHT FOR EACH TANK INDICATING WHICH TANK REACHED THE 90% STORAGE CAPACITY AND/OR UPON LEAK DETECTION.
25. PROVIDE A REMOTE FILL ABOVE GROUND STORAGE TANK SPILL CONTAINER OPW #6-211-R-30-2-B2-LD.

FUEL STATION NOTES

1. CONTRACTOR SHALL BE TCEQ CERTIFIED FOR UNDERGROUND TANK INSTALLATIONS AND REMOVALS, AND CERTIFIED BY THE TANK MANAGEMENT SYSTEM MANUFACTURER. CONTRACTOR SHALL PROVIDE CERTIFICATIONS WITH SUBMITTALS. SPECIFICATION SECTION 11140 - FUEL DISPENSING SYSTEM IS PART OF THE ELECTRICAL CONTRACTORS SCOPE OF WORK.
2. NOTE THAT CONSTRUCTION DRAWINGS ARE DIAGRAMMATIC BY THEIR NATURE, AND ARE NOT INTENDED TO SHOW EVERY CONNECTION IN DETAIL OR EVERY VENT PIPE, TANK PENETRATION OR DEVICE IN ITS EXACT LOCATION. FEATURES AND COMPONENTS NOT SHOWN ARE SUBJECT TO THE REQUIREMENTS OF STANDARDS REFERENCED ELSEWHERE IN THE CONSTRUCTION DOCUMENTS. THE CONTRACTOR SHALL COORDINATE THE VARIOUS TRADES IN ORDER TO AVOID INTERFERENCE BETWEEN DEVICES IT IS THE CONTRACTORS RESPONSIBILITY TO ENSURE A COMPLETE WORKING SYSTEM WHICH SHALL COMPLY WITH NFPA 30, NFPA 30A, AND NFPA 70, AND TEXAS COMMISSION ON ENVIRONMENTAL QUALITY, (TCEQ) FOR ABOVEGROUND STORAGE TANKS. IT IS THE CONTRACTORS RESPONSIBILITY TO OBTAIN REGISTRATION FROM TCEQ AND COMPLY WITH TCEQ, EPA AND NFPA REQUIREMENTS.
3. DESIGN IS BASED ON FIREGUARD ROUND DOUBLE WALL WITH THERMAL INSULATION FOR FIRE PROTECTION. TANKS SHALL BE 2-HOUR FIRE RATED. THE TANK SHALL BE LISTED AND LABELED BY UL-2085. A SAMPLE COPY OF THE TANK'S LABEL AND CERTIFICATION MUST BE INCLUDED WITH THE SUBMITTALS, OR APPROVED EQUAL.
4. CONTRACTOR SHALL FOLLOW THE MANUFACTURER'S RECOMMENDATIONS FOR INSTALLATION REQUIREMENTS. IT IS THE CONTRACTORS RESPONSIBILITY TO INSTALL AND PROVIDE A FULLY FUNCTIONAL SYSTEM INCLUDING ALL THE NECESSARY FITTINGS AND HARDWARE SENSORS, PROBES, TANK LEVEL MONITORING AND LEAK SENSING SYSTEM, RISERS, RISER CAPS AND ATTACHMENTS FOR A COMPLETE FUNCTIONING SYSTEM.
5. ALL PIPING SHALL BE BLACK PIPE MEETING ASTM A-106 STANDARDS. CONTRACTOR SHALL PAINT ALL PIPING WITH A RUST PROHIBITIVE ENAMEL. THE COLOR SHALL BE FIRE ENGINE RED.
6. CONTRACTOR SHALL SUBMIT A COPY OF THE TCEQ ABOVEGROUND FUEL STORAGE TANK CONSTRUCTION NOTIFICATION FORM SUBMITTED TO TCEQ FOR GASOLINE STORAGE TANKS LARGER THAN 1,100 GAL.
7. CONTRACTOR SHALL PROVIDE A DRIVE OVER ASPHALT DIKE BERM AROUND THE FUEL STATION LARGE ENOUGH TO CONTAIN 6,000 GALLONS. PROVIDE A PIPE VALVE SYSTEM TO DRAIN THE AREA. THE BERM SHALL NOT EXCEED 6" IN HEIGHT. DIKE IS NOT SHOWN IN PLANS DUE TO UNKNOWN SLOPES. CONTRACTOR SHALL COORDINATE THE DIKE AREA WITH OTHER DISCIPLINES.

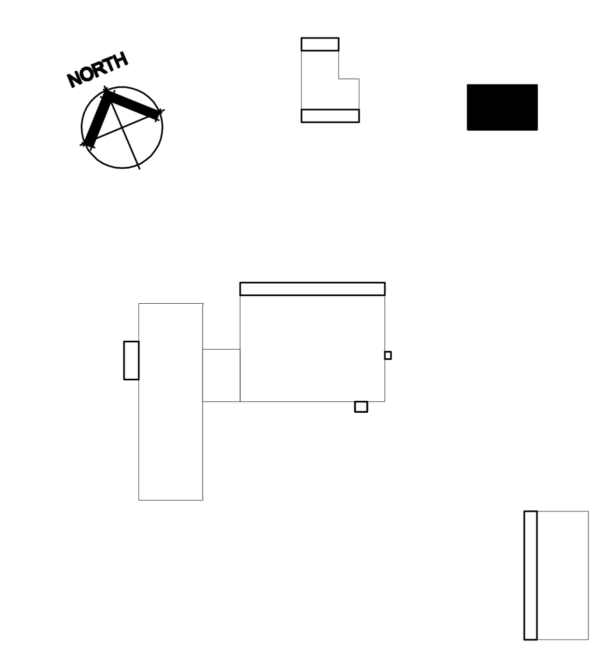

KEY PLAN

FUEL STATION PLAN - SCHEDULE & ELEVATIONS

NOTE: THIS DRAWING WAS CREATED FOR PRODUCTION ON 22" x 34" SHEET SIZE. DO NOT SCALE PRINTS.

Texas Department of Transportation
125 E. 11th Street
Austin, Texas 78701-2483
(512) 416-3048

Copyright © 2005 Texas Department of Transportation

THIS DOCUMENT IS RELEASED FOR THE PURPOSE OF INFORMATION ONLY
NOT FOR REGULATORY APPROVAL, PERMITTING, OR CONSTRUCTION.

WACO AREA ENGINEER AND MAINTENANCE FACILITY
WACO, MCLENNAN COUNTY
WACO DISTRICT

Revisions
Drawn by: CON
Project No. CBC4704-00672
Date 05.21.2007
Sheet No.
E2.20
of 15 E sheets

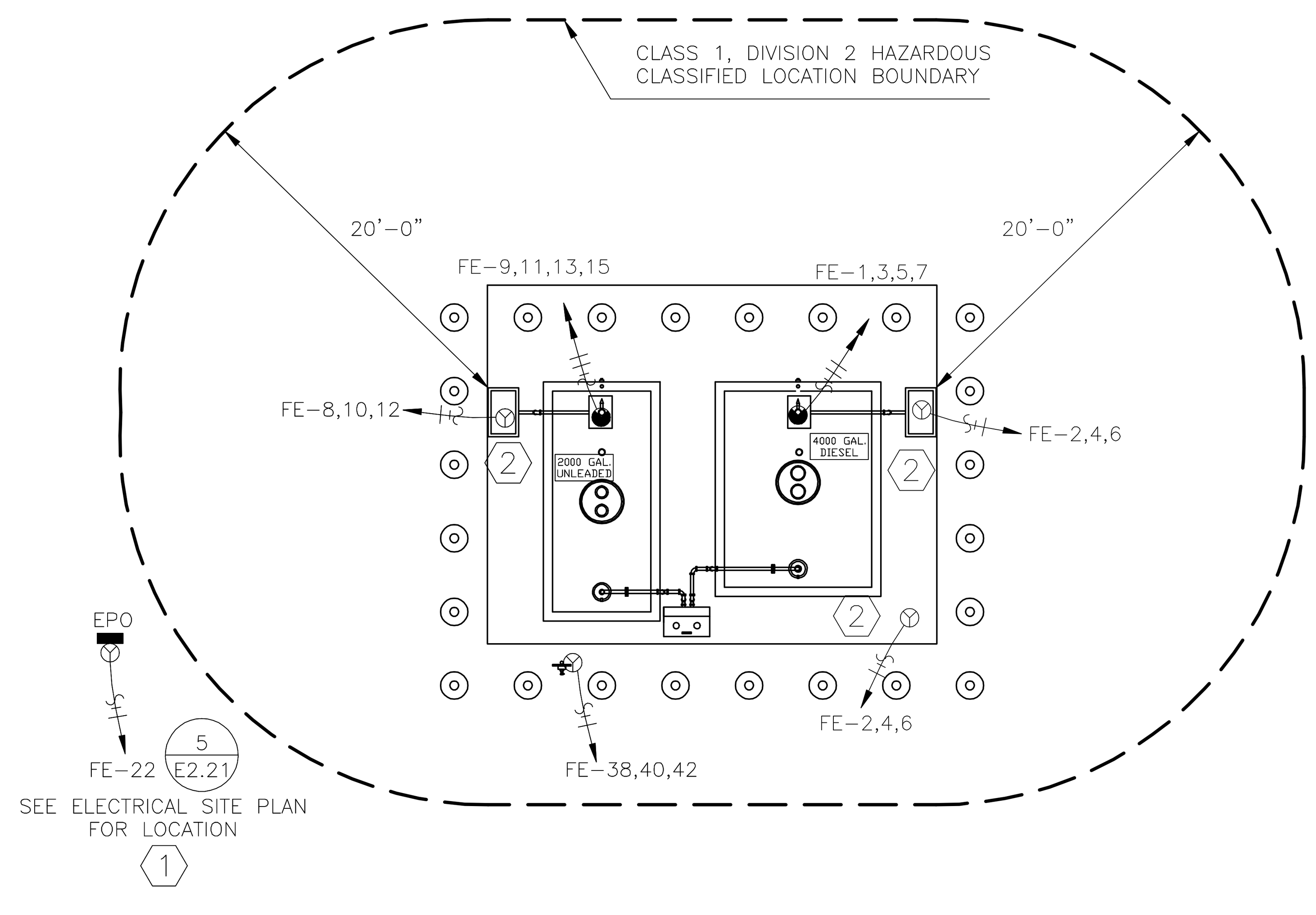

1 FUEL STATION POWER AND SPECIAL SYSTEMS

SCALE: 1/8" = 1'-0"

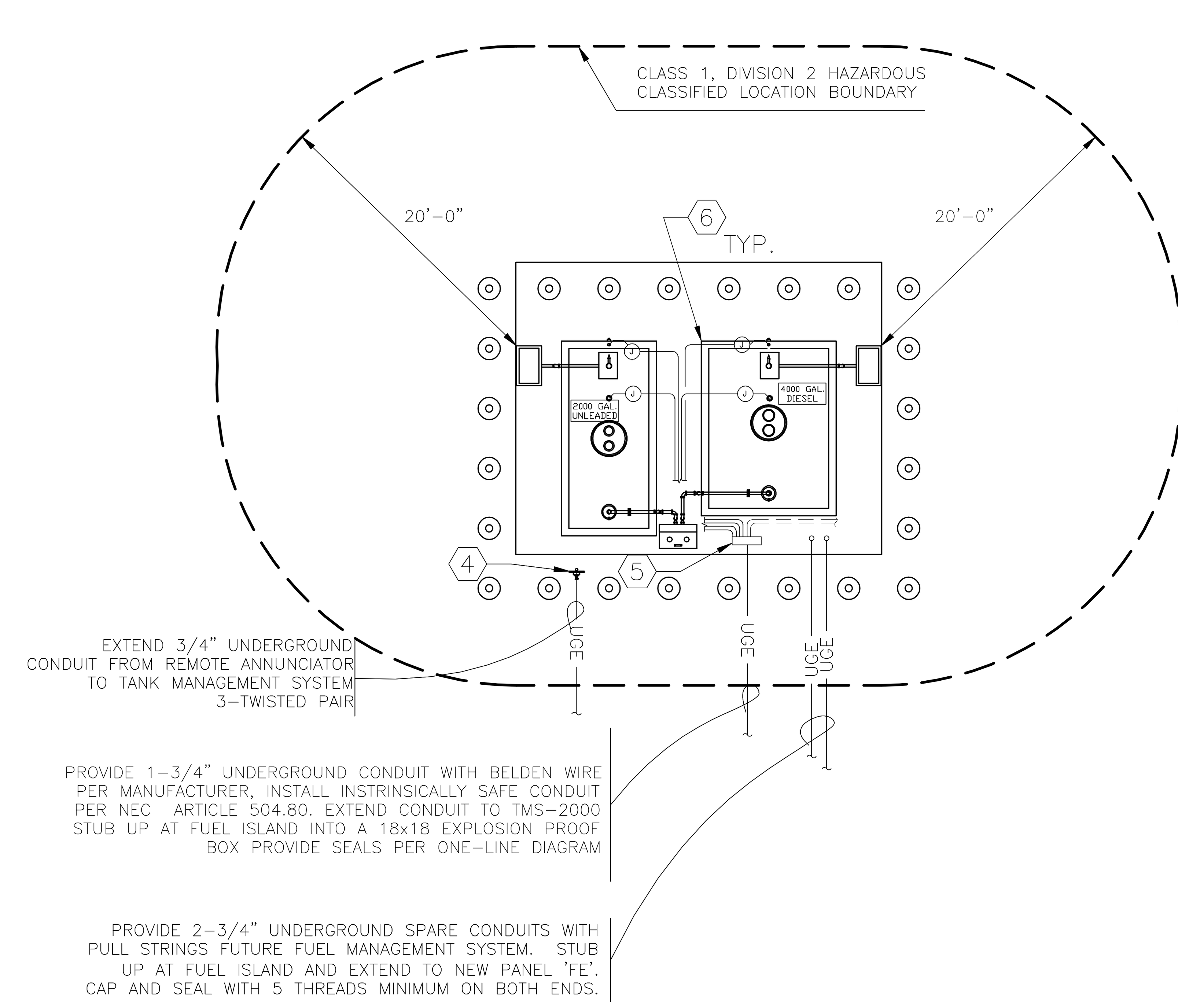

2 FUEL STATION SPECIAL SYSTEMS

SCALE: 1/8" = 1'-0"

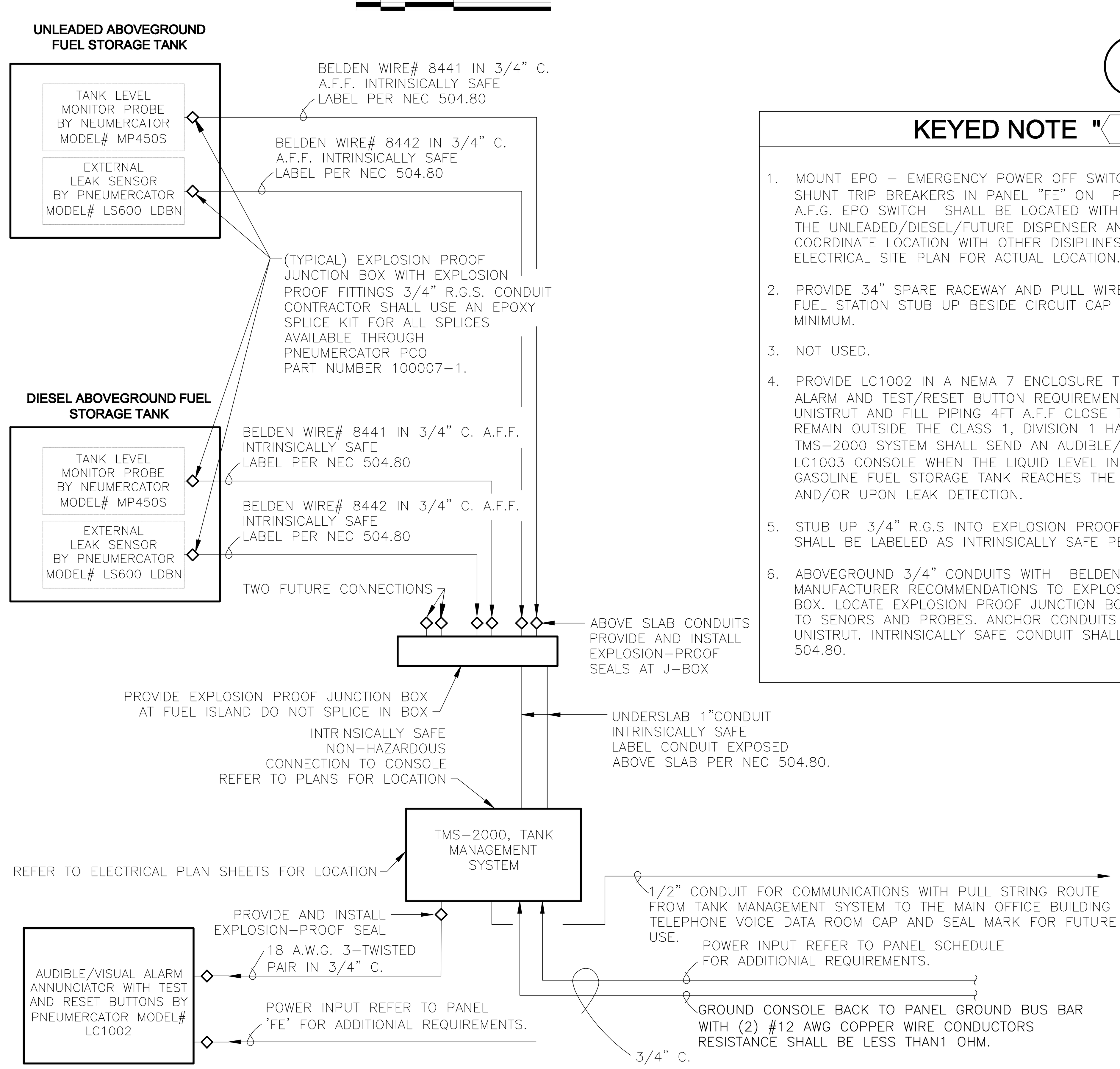

3 WIRING DIAGRAM FOR TANK MANAGEMENT SYSTEM WITH IN-TANK AND SECONDARY CONTAINMENT LEAK DETECTION

SCALE: NOT TO SCALE

KEYED NOTE "⬡"

1. MOUNT EPO - EMERGENCY POWER OFF SWITCH TO ACTIVATE ALL SHUNT TRIP BREAKERS IN PANEL "FE" ON PEDESTAL PER NEC 48" A.F.G. EPO SWITCH SHALL BE LOCATED WITHIN 20 TO 100FT FROM THE UNLEADED/DIESEL/FUTURE DISPENSER AND LPG DISPENSORS. COORDINATE LOCATION WITH OTHER DISPLINES. REFERENCE ELECTRICAL SITE PLAN FOR ACTUAL LOCATION.
2. PROVIDE 34" SPARE RACEWAY AND PULL WIRE FROM PANEL 'FE' TO FUEL STATION STUB UP BESIDE CIRCUIT CAP WITH 5 THREADS MINIMUM.
3. NOT USED.
4. PROVIDE LC1002 IN A NEMA 7 ENCLOSURE TO SATISFY REMOTE ALARM AND TEST/RESET BUTTON REQUIREMENTS. RACK MOUNT WITH UNISTRUT AND FILL PIPING 4FT A.F.F CLOSE TO REMOTE FILL BOX. REMAIN OUTSIDE THE CLASS 1, DIVISION 1 HAZARDOUS AREAS. TMS-2000 SYSTEM SHALL SEND AN AUDIBLE/VISIBLE ALARM TO THE LC1003 CONSOLE WHEN THE LIQUID LEVEL IN THE DIESEL AND/OR GASOLINE FUEL STORAGE TANK REACHES THE 90% STORAGE CAPACITY AND/OR UPON LEAK DETECTION.
5. STUB UP 3/4" R.G.S INTO EXPLOSION PROOF JUNCTION BOX. BOX SHALL BE LABELED AS INTRINSICALLY SAFE PER NEC 504.80.
6. ABOVEGROUND 3/4" CONDUITS WITH BELDEN WIRE PER MANUFACTURER RECOMMENDATIONS TO EXPLOSION PROOF JUNCTION BOX. LOCATE EXPLOSION PROOF JUNCTION BOXS FOR CONNECTION TO SENORS AND PROBES. ANCHOR CONDUITS TO TOP OF SLAB WITH UNISTRUT. INTRINSICALLY SAFE CONDUIT SHALL BE LABELED PER NEC 504.80.

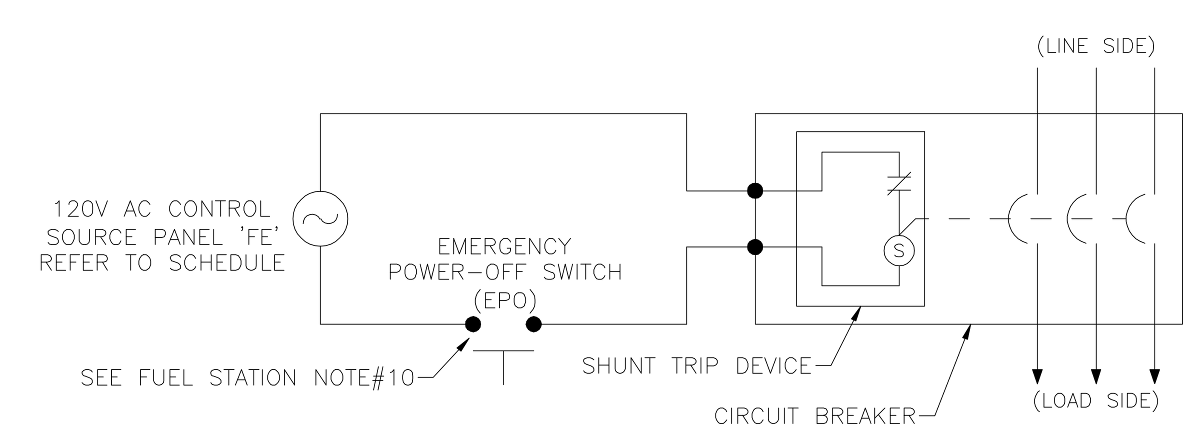

4 SHUNT TRIP WIRING DIAGRAM

SCALE: NOT TO SCALE

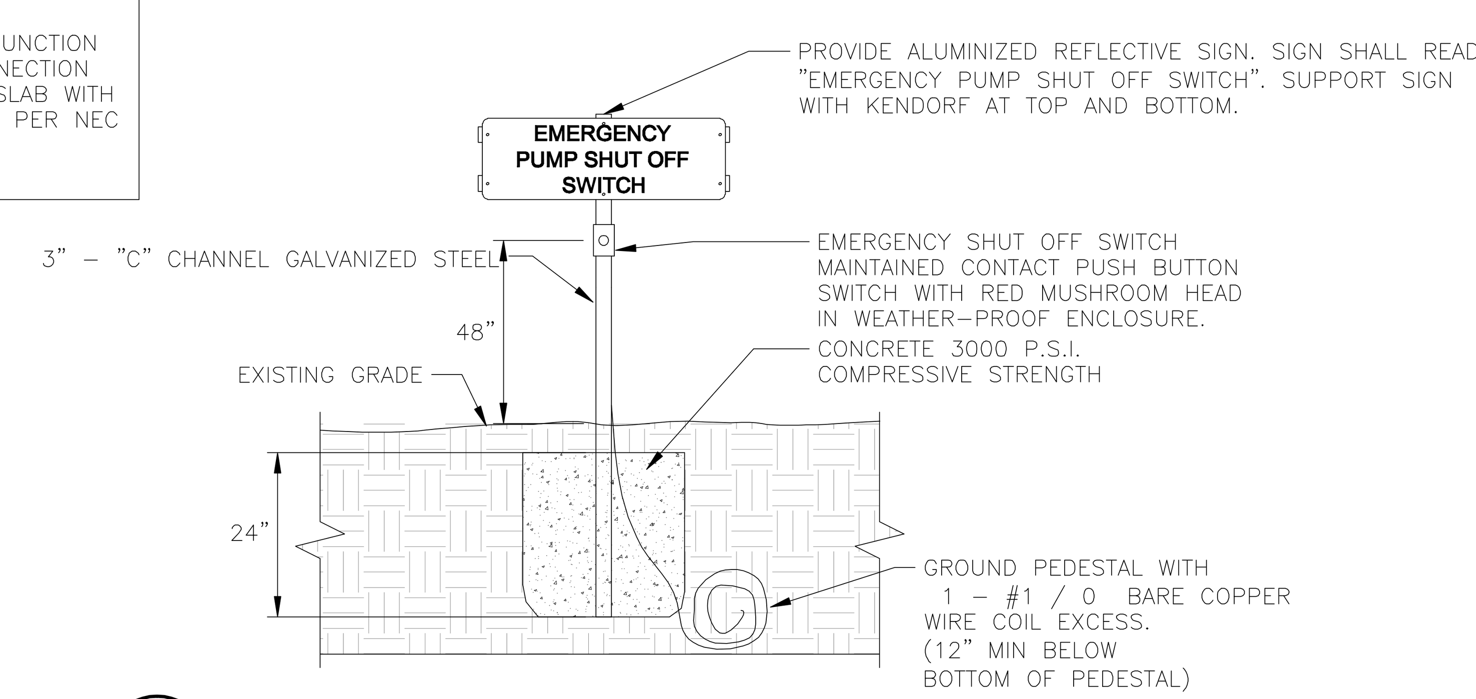

5 EMERGENCY SHUT OFF SWITCH MOUNT ON PEDESTAL

SCALE: NOT TO SCALE

FUEL STATION NOTES

1. ALL BRANCH CIRCUIT WIRING FROM PANEL 'FE' TO THE FUEL STATION SHALL BE TYPE THHN GASOLINE & OIL RESISTANT SOLID WIRE A MINIMUM OF #12 WIRE IN 3/4"C., GASOLINE RESISTANT, AND INSTALLED IN RIGID GALVANIZED STEEL (R.G.S.). ALL BELOW GRADE CONDUIT SHALL BE RIGID NONMETALIC CONDUIT ENCASED IN RED CONCRETE 3" THICK . ALL LONG RADIUS 90° ELBOWS EMERGING FROM THE EARTH OR CONCRETE SHALL BE RIGID GALVANIZED STEEL AND DOUBLE WRAPPED. CONTRACTOR SHALL INSTALL EXPLOSION-PROOF SEALS IN RIGID GALVANIZED STEEL.
2. THE FIRST FITTING ABOVE THE SLAB SHALL BE AN N.E.C. APPROVED EXPLOSION-PROOF SEAL INSTALL AND PROVIDE SEALS IN ALL CONDUITS EMERGING AND LEAVING THE SLAB AT THE FUEL ISLAND AND AT PANEL "FE", PER N.E.C..
3. THE ELECTRICAL INSTALLATION FOR THE FUEL ISLAND, INCLUDING POWER AND COMMUNICATIONS, SHALL COMPLY WITH THE NATIONAL ELECTRICAL CODE, ARTICLES 500, 501, 502, 504, AND 514 AND ALL RELATED ARTICLES THEREOF.
4. ALL CONDUITS SHALL BE INSTALLED UNDERGROUND PRIOR TO FUEL ISLAND'S CONCRETE FOUNDATION INSTALLATION.
5. PROVIDE AND INSTALL A TANK MANAGEMENT SYSTEM WITH IN-TANK LEVEL PROBES AND SECONDARY CONTAINMENT LEAK DETECTION BY PNEUMERCATOR, "TMS 2000 SERIES" WITH A LC1003 AT FUEL ISLAND TO SERVE AS THE REMOTE ALARM AND TEST/RESET BUTTON. IF A DIFFERENT SYSTEM IS PROVIDED, IT SHALL BE THE CONTRACTOR'S RESPONSIBILITY TO PROVIDE THE CORRECT TYPE AND QUANTITY OF COMMUNICATION CABLING AND CONDUITS FOR THAT SYSTEM.
6. CONTRACTOR SHALL FOLLOW THE MANUFACTURER'S RECOMMENDATIONS FOR INSTALLATION REQUIREMENTS. IT IS THE CONTRACTORS RESPONSIBILITY TO INSTALL AND PROVIDE A FULLY FUNCTIONAL SYSTEM INCLUDING ALL THE NECESSARY FITTINGS AND HARDWARE SENSORS, PROBES, RISERS, RISER CAPS AND ATTACHMENTS FOR A COMPLETE FUNCTIONING SYSTEM.
7. NO SPLICES SHALL BE MADE IN THE WIRE RUN BETWEEN A SENSOR OR PROBE JUNCTION BOX AND THE TANK LEVEL MONITOR & LEAK SENSING CONSOLE.
8. WHEN AN ADDITIONAL EPO IS REQUIRED IN THE PLANS ALL EPO SWITCHES SHALL BE WIRED IN PARALLEL TRIPING ALL SHUNT TRIP BREAKERS IN PANEL 'FE'.
9. MOUNT EACH EPO - EMERGENCY POWER OFF SWITCH TO ACTIVATE ALL SHUNT TRIP CIRCUIT BREAKERS IN PANEL 'FE' ON PEDESTAL PER NEC 48" A.F.G. THE SWITCH SHALL BE LOCATED MORE THAN 20 BUT LESS THAN 100FT FROM UNLEADED/DIESEL/FUTURE AND LPG FUEL DISPENSERS. REFER TO DETAIL 5 THIS SHEET FOR FURTHER REQUIREMENTS.
10. WHEN MORE THAN ONE EPO SWITCH IS REQUIRED EACH EPO SWITCH SHALL DISCONNECT SIMULTANEOUSLY FROM THE SOURCE OF SUPPLY, ALL CONDUCTORS OF THE CIRCUIT, INCLUDING THE GROUNDED CONDUCTOR PER N.E.C., ARTICLE 514-11(A) "CIRCUIT DISCONNECTS".
11. EACH EMERGENCY POWER-OFF SWITCH (EPO) SHALL BE A MAINTAINED BE CLEARLY IDENTIFIED AND EASILY ACCESSIBLE AND BE INSTALLED IN A REMOTE LOCATION MORE THAN 20 FEET BUT LESS THAN 100 FEET FROM THE DISPENSER UNITS AND ALSO IN LINE OF SIGHT OF THE DISPENSER UNITS. THE EMERGENCY STOP BUTTON SHALL BE A MANUFACTURERED EMERGENCY STOP CONTROL STATION COMPLETE KIT WITH A CLEAR COVER AND EMERGENCY STOP SIGNAGE WITHIN ENCLOSURE BY POWER INTERGITY #IA-ESOC.
12. PROVIDE TWO HOURS OF TRAINING TO OWNER SELECTED PERSONNEL ON TANK LEVEL AND MONITORING AND LEAK SENSING SYSTEM BY MANUFACTOR.
13. FUEL STATION CONTRACTOR SHALL SUBMIT TO THE OWNER A COPY OF THE CERITIFICATION LETTER FROM THE TANK MANAGEMENT SYSTEM MANUFACTURER STATING THE SYSTEM IS FUNCTIONING AND INSTALLED PROPERLY.
14. INTRINSICALLY SAFE INPUT WIRING SHALL BE INSTALLED IN PER N.E.C. ARTICLE 504. NON-TRINSICALLY SAFE WIRING CANNOT BE RUN IN CONDUIT OR OPEN RACEWAYS TOGETHER WITH INTRINISICALLY SAFE WIRING.

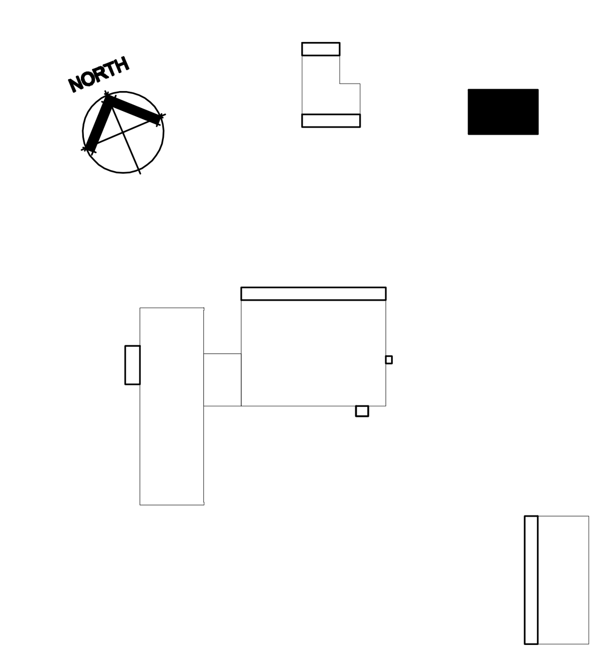

KEY PLAN

Texas Department of Transportation
125 E. 11th Street
Austin, Texas 78701-2483
(512) 416-2040

Copyright © 2005 Texas Department of Transportation

THIS DOCUMENT IS RELEASED FOR THE PURPOSE OF INFORMATION ONLY
NOT FOR REGULATORY APPROVAL, PERMITTING, OR CONSTRUCTION.

WACO AREA ENGINEER AND MAINTENANCE FACILITY

WACO, MCLENNAN COUNTY WACO DISTRICT

Revisions

Drawn by: CON

Project No. CBC4704-00672

Date 05.21.2007

Sheet No.

E2.21

of 15 E sheets

FUEL STATION PLAN - POWER & SPECIAL SYSTEMS

NOTE: THIS DRAWING WAS CREATED FOR PRODUCTION ON 22" x 34" SHEET SIZE. DO NOT SCALE PRINTS.

LIGHTING FIXTURE SCHEDULE

TYPE	MANUFACTURER AND MODEL NUMBER	VOLTAGE	LAMPS	NOTES	INPUT WATTS
A	LITHONIA 2SP8-G-232-A12125-120-GEB	120	2-F32T8	2 LAMP LAYIN TROFFER	65
AE	LITHONIA 2SP8-G-232-A12125-120-GEB-EL	120	2-F32T8	SAME AS 'A' WITH BATTERY PACK	65
B	LITHONIA 2SP8-G-332-A12125-120-1/3GEB	120	3-F32T8	3 LAMP LAYIN TROFFER	65
BE	LITHONIA 2SP8-G-332-A12125-120-1/3GEB-EL	120	3-F32T8	SAME AS 'B' WITH BATTERY PACK	65
BD	LITHONIA 2SP8-G-332-A12125-120-GEB	120	3-F32T8	3 LAMP LAYIN TROFFER WITH DUAL LEVEL SWITCHING	100
BDE	LITHONIA 2SP8-G-332-A12125-120-GEB-EL	120	3-F32T8	SAME AS 'BD' WITH BATTERY PACK	100
D	LITHONIA WP-225-ACF125-120-GEB	120	2-F25T8	WALL MOUNTED FIXTURE MOUNT 8' A.F.F.	65
E	LITHONIA C-232-120-GEB-WG	120	2-F32T8	CHANNEL FIXTURE WITH WIRE GUARD	65
EE	LITHONIA C-232-120-GEB-WG-EL	120	2-F32T8	SAME AS 'E' WITH BATTERY PACK	65
GD	LITHONIA AF-2-18TRT-8-AR-T73-120	120	2-18TRT	RECESSED FLOURESCENT DOWNLIGHTING	40
G	LITHONIA AF-1-18TRT-8-AR-T73-120	120	1-18TRT	RECESSED FLOURESCENT DOWNLIGHTING	18
J	LITHONIA DMW-232-AR-120-GEB	120	2-F32T8	ENCLOSED INDUSTRIAL CHANNEL FIXTURE	65
K	SPECLIGHT GB24-6-32-N1-X20U-MVOLT-GEB LPM841XS-WG-HDS**	120	6-F32T8 4100 K	CHAIN HUNG FLUORESCENT FIXTURE	300
KE	SPECLIGHT GB24-6-32-N1-X20U-MVOLT-GEB LPM841XS-WG-HDS**	120	6-F32T8 4100 K	SAME AS 'K' WITH BATTERY PACK	300
L	SPECLIGHT GB14-3-32-N1-X20U-MVOLT-GEB LPM841XS-WG-HDS**	120	3-F32T8 4100 K	CHAIN HUNG FLUORESCENT FIXTURE	100
LE	SPECLIGHT FHB14-3-32-N1-X20U-MVOLT-GEB LPM841XS-WG-HDS**	120	3-F32T8 4100 K	SAME AS 'L' WITH BATTERY PACK	100
M	LITHONIA TWH-175M-120-DNA	120	1-175W MH	WALL PACK - COLOR BY ARCHITECT	210
N	LITHONIA AH-50M-8-AR-120	120	1-50W MH	DAMP LOCATION RECESSED DOWN LIGHT	70
NS	LITHONIA AH-50M-8-AR-120-SCA*	120	1-50W MH	SAME AS "N" SLOPE SHALL BE FIELD VERIFIED	70
R	LITHONIA LFG-2-18TRT-10-RW-FFL-120	120	2-18TRT	WET LOCATION RECESSED DOWN LIGHT	40
P	LITHONIA TFM-70M-TA-TB	208	1-70W MH	MOUNT FLOOD LIGHT 5 FEET FROM CENTER LINE OF SIGN	90
SR	LITHONIA KAD-400M-R2-TB-RPD09-DDB	208	1-400W MH	ROADWAY AREA LIGHT INSTALL LIGHT POLE 4 FEET FROM CURB	455
POLE	LITHONIA RTS-30-6-6B			POLE FOR AREA LIGHT. # OF FIXTURES /POLE ON PLANS	
X1	LITHONIA LHQM-S-W-1-R-120-N-H	120	LED	SINGLE FACE EXIT SIGN	3.9
X2	LITHONIA LHQM-S-W-2-R-120-N-H	120	LED	DOUBLE FACE EXIT SIGN	3.9

ELECTRICAL SYMBOLS LEGEND

- NOVITAS MODEL# 01-110 CEILING MOUNTED LARGE ROOM TWO-WAY ULTRASONIC MOTION SENSOR .
- NOVITAS MODEL# 01-190 CEILING MOUNTED TWO-WAY CORRIDOR ULTRASONIC MOTION SENSOR .
- SP — NOVITAS MODEL# 13-051 MOUNTED ABOVE CEILING HEAVY DUTY SWITCHPACK, 20 AMPS @ 120VAC BALLAST.
- PIR — NOVITAS SUPER SWITCH 2, MODEL# 01-400, PASSIVE INRARED WALL SWITCH, 6.7 AMPS @ 120VAC BALLAST.
- PIR DL — NOVITAS SUPER SWITCH 2, MODEL# 01-DL400, PASSIVE INRARED WALL SWITCH WITH CONTROL FOR TWO SEPARATE LOADS. RATED AT 6.7 AMPS @ 120VAC BALLAST.
- $ — WALL SWITCH
- $3 — 3-WAY WALL SWITCH
- $4 — 4-WAY WALL SWITCH
- $M — MANUAL MOTOR STARTER
- PP — MODULAR FURNITURE POWER POLE
- FPP — ELECTRICAL CONTRACTOR PROVIDED FREE STANDNING POWER POLE WITH TWO RECESSED RECEPTACLES AND STANDARD 2-VOICE, 2-DATA OUTLET
- VOICE ONLY
- STANDARD 2-VOICE, 2-DATA
- DATA LINE ONLY
- LIGHT FIXTURE
- EXIT SIGN
- EMERGENCY LIGHTING FIXTURE
- DUPLEX RECEPTACLE
- DOUBLE DUPLEX (QUAD) RECEPTACLE
- ISOLATED GROUND (IG) DUPLEX RECEPTACLE
- R — 208/240V RECEPTACLE-RATING AS SHOWN
- DISCONNECT SWITCH
- X — FULL VOLTAGE NON-REVERSING FUSIBLE DISCONNECT SWITCH TYPE COMBINATION STARTER X= NEMA SIZE
- X — FULL VOLTAGE NON-REVERSING CONTACTOR AND STARTER X= NEMA SIZE
- LC — LIGHTING CONTACTOR
- MC — MECHANICALLY HELD MULTIPOLE CONTACTOR
- T — FLOOR MOUNTED TRANSFORMER
- TC — TIME CLOCK
- R — RELAY
- HOA — HAND OF AUTO SELECTOR SWITCH
- DISTRIBUTION PANEL OR SWITCHBOARD
- PANELBOARD
- J — JUNCTION BOX
- 120V 1PH CONNECTION
- 208V 1PH CONNECTION
- 208V 3PH CONNECTION
- 240V 1PH CONNECTION
- 240V 3PH CONNECTION
- 277V 1PH CONNECTION
- 480V 3PH CONNECTION
- PC — PHOTO - CELL

BRANCH CIRCUIT & WIRE NOTATION

A1-10
- PANEL AND CIRCUIT NUMBERS
- EQUIPMENT GROUND
- ISOLATED GROUND
- SWITCH LEG
- HOT
- NEUTRAL

LISTED ABBREVIATIONS

BOF	BOTTOM OF FIXTURE
GFI	GROUND FAULT INTERUPT
WP	WEATHERPROOF DEVICE OR ENCLOSURE
RGS	RIGID GALVANIZED STEEL CONDUIT
PVC	POLY VINYL CLORIDE CONDUIT
EMT	ELECTRICAL METALIC TUBING CONDUIT
AFR	ABOVE FINISHED ROOF
AFF	ABOVE FINISHED FLOOR
BFG	BELOW FINISHED GRADE
AFG	ABOVE FINISHED GRADE
SCH.	SCHEDULE

- — UGE — UNDERGROUND ELECTRICAL
- — UVD — UNDERGROUND VOICE DATA
- — UGT — UNDERGROUND TELEPHONE SERVICE

- TVSS/1 — TRANSIENT VOLTAGE SURGE SUPPRESSOR: DITEK MODEL DTGX-120-208-3Y, 200,000 AMP RATED PER PHASE W/ FILTER, UL 1449 LISTED, 7-MODE PROTECTION, 5 nSEC RESPONSE HARDWIRED TO NEW, 3 POLE, 30 AMP CIRCUIT BREAKER IN PANEL.
- TVSS/2 — TRANSIENT VOLTAGE SURGE SUPPRESSOR: DITEK MODEL DTG-120-208-3Y, 100,000 AMP RATED PER LEG WITH FILTER, UL 1449 LISTED, 7-MODE PROTECTION, MCOV 115% OF NOMINAL LINE VOLTAGE, HARDWIRED TO 3-POLE, 30 AMP. CIRCUIT BREAKER IN PANEL.

ELECTRICAL LOAD ANALYSIS

LIGHTING LOAD @ 125% (VA)				59,063
AREA (SQ FT)	13,500	x3.5 =	47,250	
CONNECTED LIGHT LOAD VA			27,826	
LIGHTING VA			47,250	
RECEPTACLE LOAD (VA)				52,844
CONNECTED RECPT LOAD	95,688			
1st 10KVA @ 100%	10,000			
REMAINDER @ 50%	42,844			
GENERAL LOAD @ 100% (VA)				129,132
LARGEST MOTOR LOAD @ 125% (VA)				11,250
COOLING LOAD @ 100% (VA)				58,440
HEATING LOAD @ 100% (VA)				127,140
SPARE CAPACITY (VA) @	13 %			49,326
TOTAL SERVICE KVA				429
TOTAL SERVICE AMPS @	208	VOLTS		1,190

COOLING AND HEATING LOADS ARE NONCOINCIDENT.
ONLY THE LARGEST IS USED IN SERVICE CALCULATION

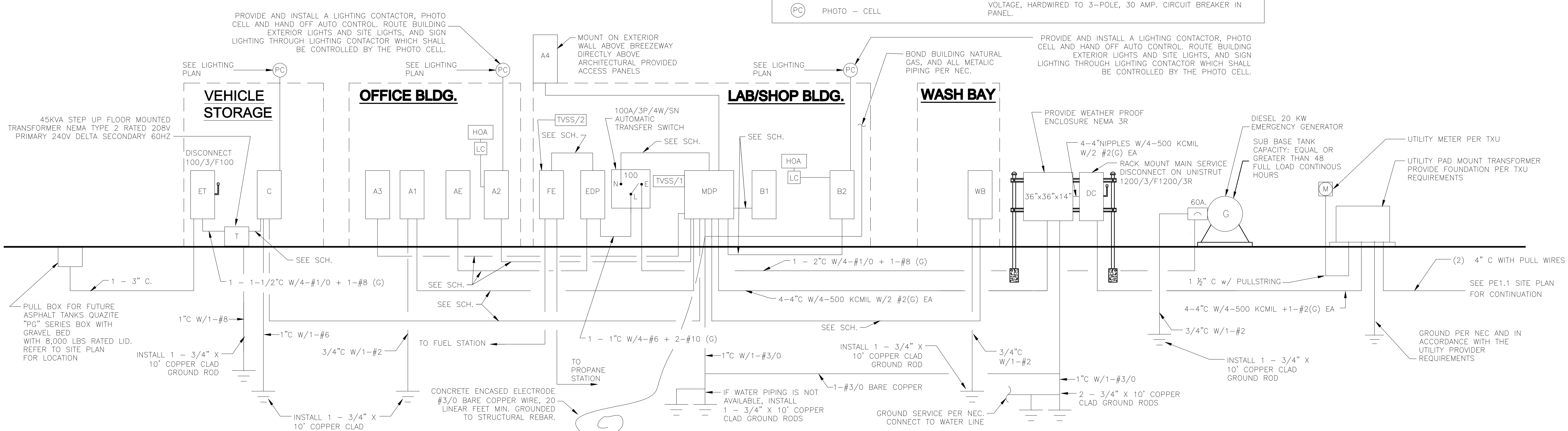

ELECTRICAL RISER DIAGRAM, LEGEND & LIGHTING SCHEDULE

NOTE: THIS DRAWING WAS CREATED FOR PRODUCTION ON 22" x 34" SHEET SIZE. DO NOT SCALE PRINTS.

CADFILE: T:\MNTFMD\02FTW\CBC4704-00-83702-77-47040085\Acad\prototypical pdfs\waco\Acad\MEP\ELEC\E3_1.dwg Plotted: Fri, Aug. 07, 2009 @ 1:28 PM By: MBAZAN

Texas Department of Transportation
125 E. 11th Street
Austin, Texas 78701-2483
(512) 416-3048

Copyright © 2005 Texas Department of Transportation

THIS DOCUMENT IS RELEASED FOR THE PURPOSE OF INFORMATION ONLY
NOT FOR REGULATORY APPROVAL, PERMITTING, OR CONSTRUCTION.

WACO AREA ENGINEER AND MAINTENANCE FACILITY
WACO, MCLENNAN COUNTY WACO DISTRICT

Revisions

Drawn by: CON
Project No. CBC4704-00672
Date 05.21.2007
Sheet No.

E3.1

of 15 E sheets

PANEL MDP 1200A MLO   ISOLATED GROUND BAR

SERVICE 120/208V,3ø,4 WIRE   PHASE   AIC 65,000 RMS   NEMA 1

CONDUIT & WIRE	CRT#	BKR/P	ITEM DESCRIPTION	AMPS	A	B	C	AMPS	ITEM DESCRIPTION	BKR/P	CRT#	CONDUIT & WIRE
	1			108	327			219			2	
1 - 2"C w / 4-#2/0+2-#6(G)EA	3	125/3	PANEL A1	111		326		216	PANEL B1	300/3	4	1 - 3"C w / 4-350 KCMIL+2-#4(G)EA
	5			75			238	163			6	
	7			193	262			70			8	
1 - 2 1/2"C w / 4-#4/0+2-#6(G)EA	9	200/3	PANEL A2	188		246		59	EDP (XFER SWITCH)	60/3	10	1 - 1 1/4"C w / 4-#4+2-#10(G)EA
	11			172			218	46			12	
	13			261	402			141			14	
2 - 2"C w / 4-#3/0+2-#3(G)EA	15	350/3	PANEL A3	261		390		129	PANEL C	200/3	16	2 - 2"C w / 4-#3/0+2-#3(G)EA
	17			261			384	123			18	
	19			137	223			86			20	
1 - 2"C w / 4-#3/0+2-#6(G)EA	21	200/3	PANEL A4	121		199		78	PANEL B2	125/3	22	1 - 2"C w / 4-#1/0+2-#8(G)EA
	23			137			217	80			24	
1 - 3/4"C w / 2-#12+1-#12(G)EA	25	20/1	EF-6	6	84			79			26	
1 - 3/4"C w / 2-#12+1-#12(G)EA	27	20/1	EF-7	6		90		84	PANEL WB	125/3	28	1 - 2"C w / 4-#3/0+1-#6(G)EA
1 - 3/4"C w / 2-#12+1-#12(G)EA	29	20/1	SIRENS/LIGHTS	3			40	37			30	
1 - 3/4"C w / 2-#12+1-#12(G)EA	31	20/1	GAS DETECTION CONSOLE	2	2			0			32	
1 - 1"C w / 4-#6+1-#10(G)EA	33	50/2	WELDER PLUG	40		40		0			34	
	35			40			40	0			36	
	37			0	0			0			38	
	39			0		0		0	TVSS	30/3	40	
	41			0			0	0			42	
				TOTAL	1,300	1,291	1,136					

CONTRACTOR SHALL SUPPLY APPROPRIATE FRAME RATING TO ACCOMMODATE FEEDER WIRE SIZE AND BRANCH CIRCUIT WIRES FOR ALL BEAKERS ON THIS PROJECT

PANEL A1 125 MCB   ISOLATED GROUND BAR

SERVICE 120/208V,3ø,4 WIRE   PHASE   AIC 22,000 RMS   NEMA 1

CONDUIT & WIRE	CRT#	BKR/P	ITEM DESCRIPTION	AMPS	A	B	C	AMPS	ITEM DESCRIPTION	BKR/P	CRT#	CONDUIT & WIRE
1 - 3/4"C w / 2-#12 + 1-#12(G)EA	1	20/1	EF-1	1.0	1.0			0.0	SPARE	20/1	2	
	3	20/1	SPARE	0.0		0.0		0.0	SPARE	20/1	4	
	5	20/1	SPARE	0.0			0.0	0.0	SPARE	20/1	6	
1 - 3/4"C w / 4-#10 + 1-#10(G)EA	7	20/2	EWH-30	22.0	32.8			10.8	ENG. INT. LIGHTS	20/1	8	1 - 3/4"C w / 2-#12 + 1-#12(G)EA
	9			22.0		34.5		12.5	ENG. INT. LIGHTS	20/1	10	1 - 3/4"C w / 2-#10 + 1-#10(G)EA
1 - 3/4"C w / 2-#12 + 1-#12(G)EA	11	20/1	OFFICE LIGHTS	10.0			18.3	8.3	ENG. INT. LIGHTS	20/1	12	1 - 3/4"C w / 2-#12 + 1-#12(G)EA
1 - 3/4"C w / 2-#12 + 1-#12(G)EA	13	20/1	MEETING RM LIGHTS	10.0	10.0			0.0	SPARE	20/1	14	
1 - 3/4"C w / 2-#12 + 1-#12(G)EA	15	20/1	OFFICE LIGHTS	9.5		12.5		3.0	IG RECEPTACLES	20/1	16	1 - 3/4"C w / 2-#12 + 2-#12(G)EA
	17	20/1	SPARE	0.0			15.0	15.0	RECEPTACLES	20/1	18	1 - 3/4"C w / 2-#10 + 1-#10(G)EA
1 - 3/4"C w / 2-#12 + 2-#12(G)EA	19	20/1	IG RECEPTACLES	3.0	18.0			15.0	RECEPTACLES	20/1	20	1 - 3/4"C w / 2-#10 + 1-#10(G)EA
1 - 3/4"C w / 2-#12 + 2-#12(G)EA	21	20/1	IG RECEPTACLES	4.5		9.0		4.5	IG RECEPTACLES	20/1	22	1 - 3/4"C w / 2-#12 + 2-#12(G)EA
	23	20/1	SPARE	0.0			3.0	3.0	RECEPTACLES	20/1	24	1 - 3/4"C w / 2-#12 + 1-#12(G)EA
1 - 3/4"C w / 2-#12 + 1-#12(G)EA	25	20/1	RECEPTACLES	4.5	9.0			4.5	IG RECEPTACLES	20/1	26	1 - 3/4"C w / 2-#12 + 2-#12(G)EA
1 - 3/4"C w / 2-#12 + 1-#12(G)EA	27	20/1 **	EWC	10.0		16.0		6.0	RECEPTACLES	20/1	28	1 - 3/4"C w / 2-#12 + 1-#12(G)EA
1 - 3/4"C w / 2-#12 + 1-#12(G)EA	29	20/1	RECEPTACLES	6.0			10.5	4.5	RECEPTACLES	20/1	30	1 - 3/4"C w / 2-#12 + 1-#12(G)EA
1 - 3/4"C w / 2-#12 + 2-#12(G)EA	31	20/1	IG RECEPTACLES	3.0	18.0			15.0	RECEPTACLES	20/1	32	1 - 3/4"C w / 2-#10 + 1-#10(G)EA
1 - 3/4"C w / 2-#12 + 1-#12(G)EA	33	20/1	RECEPTACLES	9.0		24.0		15.0	RECEPTACLES	20/1	34	1 - 3/4"C w / 2-#10 + 1-#10(G)EA
1 - 3/4"C w / 2-#12 + 1-#12(G)EA	35	20/1	RECEPTACLES	4.5			19.5	15.0	RECEPTACLES	20/1	36	1 - 3/4"C w / 2-#10 + 1-#10(G)EA
1 - 3/4"C w / 2-#12 + 2-#12(G)EA	37	20/1	IG RECEPTACLES	4.5	19.5			15.0	RECEPTACLES	20/1	38	1 - 3/4"C w / 2-#10 + 1-#10(G)EA
1 - 3/4"C w / 2-#12 + 2-#12(G)EA	39	20/1	IG RECEPTACLES	4.5		14.5		10.0	REFRIGERATOR	20/1	40	1 - 3/4"C w / 2-#12 + 1-#12(G)EA
1 - 3/4"C w / 2-#12 + 1-#12(G)EA	41	20/1	RECEPTACLES	4.5			9.0	4.5	RECEPTACLES	20/1	42	1 - 3/4"C w / 2-#12 + 1-#12(G)EA
				TOTAL	108.3	110.5	75.3					

** GFCI BREAKER

PANEL A2 200 MCB   ISOLATED GROUND BAR

SERVICE 120/208V,3ø,4 WIRE   PHASE   AIC 22,000 RMS   NEMA 1

CONDUIT & WIRE	CRT#	BKR/P	ITEM DESCRIPTION	AMPS	A	B	C	AMPS	ITEM DESCRIPTION	BKR/P	CRT#	CONDUIT & WIRE
E2.4 MOD. FURN. WIRE STANDARD	1	20/1	MODULAR FURNITURE	15.0	30.0			15.0	MODULAR FURNITURE	20/1	2	E2.4 MOD. FURN. WIRE STANDARD
E2.4 MOD. FURN. WIRE STANDARD	3	20/1	MODULAR FURNITURE	15.0		30.0		15.0	MODULAR FURNITURE	20/1	4	E2.4 MOD. FURN. WIRE STANDARD
E2.4 MOD. FURN. WIRE STANDARD	5	20/1	MODULAR FURNITURE	15.0			30.0	15.0	MODULAR FURNITURE	20/1	6	E2.4 MOD. FURN. WIRE STANDARD
E2.4 MOD. FURN. WIRE STANDARD	7	20/1	IG MOD FURNITURE	15.0	30.0			15.0	IG MOD FURNITURE	20/1	8	E2.4 MOD. FURN. WIRE STANDARD
E2.4 MOD. FURN. WIRE STANDARD	9	20/1	MODULAR FURNITURE	15.0		30.0		15.0	MODULAR FURNITURE	20/1	10	E2.4 MOD. FURN. WIRE STANDARD
E2.4 MOD. FURN. WIRE STANDARD	11	20/1	MODULAR FURNITURE	15.0			30.0	15.0	MODULAR FURNITURE	20/1	12	E2.4 MOD. FURN. WIRE STANDARD
E2.4 MOD. FURN. WIRE STANDARD	13	20/1	MODULAR FURNITURE	15.0	30.0			15.0	MODULAR FURNITURE	20/1	14	E2.4 MOD. FURN. WIRE STANDARD
E2.4 MOD. FURN. WIRE STANDARD	15	20/1	IG MOD FURNITURE	15.0		30.0		15.0	IG MOD FURNITURE	20/1	16	E2.4 MOD. FURN. WIRE STANDARD
E2.4 MOD. FURN. WIRE STANDARD	17	20/1	MODULAR FURNITURE	15.0			30.0	15.0	MODULAR FURNITURE	20/1	18	E2.4 MOD. FURN. WIRE STANDARD
E2.4 MOD. FURN. WIRE STANDARD	19	20/1	MODULAR FURNITURE	15.0	30.0			15.0	MODULAR FURNITURE	20/1	20	E2.4 MOD. FURN. WIRE STANDARD
E2.4 MOD. FURN. WIRE STANDARD	21	20/1	MODULAR FURNITURE	15.0		30.0		15.0	MODULAR FURNITURE	20/1	22	E2.4 MOD. FURN. WIRE STANDARD
E2.4 MOD. FURN. WIRE STANDARD	23	20/1	IG MOD FURNITURE	15.0			30.0	15.0	IG MOD FURNITURE	20/1	24	E2.4 MOD. FURN. WIRE STANDARD
E2.4 MOD. FURN. WIRE STANDARD	25	20/1	MODULAR FURNITURE	15.0	30.8			15.8	EXT. BLDG. LIGHTS	20/1	26	1 - 3/4"C w / 2-#8 + 1-#10(G)EA
E2.4 MOD. FURN. WIRE STANDARD	27	20/1	MODULAR FURNITURE	15.0		25.5		10.5	EXT. BLDG. LIGHTS	20/1	28	1 - 3/4"C w / 2-#10 + 1-#10(G)EA
E2.4 MOD. FURN. WIRE STANDARD	29	20/1	MODULAR FURNITURE	15.0			15.0	0.0	SPARE	20/1	30	
E2.4 MOD. FURN. WIRE STANDARD	31	20/1	IG MOD FURNITURE	15.0	16.0			1.0	ROAD ENTRY SIGN LIGHTS	*20/2	32	1 - 3/4"C w / 2-#12 + 1-#12(G)EA
E2.4 MOD. FURN. WIRE STANDARD	33	20/1	MODULAR FURNITURE	15.0		16.0		1.0			34	
E2.4 MOD. FURN. WIRE STANDARD	35	20/1	MODULAR FURNITURE	15.0			26.0	11.0	AREA SITE LIGHTING	*20/2	36	1 - 3/4"C w / 2-#8 + 1-#10(G)EA
E2.4 MOD. FURN. WIRE STANDARD	37	20/1	MODULAR FURNITURE	15.0	26.0			11.0			38	
E2.4 MOD. FURN. WIRE STANDARD	39	20/1	IG MOD FURNITURE	15.0		26.0		11.0	AREA SITE LIGHTING	*20/2	40	1 - 3/4"C w / 2-#8 + 1-#10(G)EA
	41	20/1	SPARE	0.0			11.0	11.0			42	
				TOTAL	192.8	187.5	172.0					

*PROVIDE A CIRCUIT BREAKER CAPABLE OF BEING LOCKED IN THE OPEN POSITION

PANEL A3 350 MCB   ISOLATED GROUND BAR

SERVICE 120/208V,3ø,4 WIRE   PHASE   AIC 22,000 RMS   NEMA 1

CONDUIT & WIRE	CRT#	BKR/P	ITEM DESCRIPTION	AMPS	A	B	C	AMPS	ITEM DESCRIPTION	BKR/P	CRT#	CONDUIT & WIRE
	1			44.0	89.0			45.0			2	
1 - 1"C w / 4-#6 + 1-#10(G)EA	3	45/3	AHU-1	44.0		89.0		45.0	AHU-2	45/3	4	1 - 1"C w / 4-#6 + 1-#10(G)EA
	5			44.0			89.0	45.0			6	
	7			37.0	82.0			45.0			8	
1 - 3/4"C w / 4-#8 + 1-#10(G)EA	9	40/3	AHU-3	37.0		82.0		45.0	AHU-4	45/3	10	1 - 1"C w / 4-#6 + 1-#10(G)EA
	11			37.0			82.0	45.0			12	
	13			45.0	90.0			45.0			14	
1 - 1"C w / 4-#6 + 1-#10(G)EA	15	45/3	AHU-5	45.0		90.0		45.0	AHU-6	45/3	16	1 - 1"C w / 4-#6 + 1-#10(G)EA
	17			45.0			90.0	45.0			18	
	19			0.0	0.0			0.0			20	
	21	40/3	SPARE	0.0		0.0		0.0	SPARE	45/3	22	
	23			0.0			0.0	0.0			24	
	25		SPACE	0.0	0.0			0.0	SPACE		26	
	27		SPACE	0.0		0.0		0.0	SPACE		28	
	29		SPACE	0.0			0.0	0.0	SPACE		30	
	31			0.0	0.0			0.0			32	
	33			0.0		0.0		0.0			34	
	35			0.0			0.0	0.0			36	
	37			0.0	0.0			0.0			38	
	39			0.0		0.0		0.0			40	
	41			0.0			0.0	0.0			42	
				TOTAL	261.0	261.0	261.0					

CONTRACTOR SHALL SUPPLY APPROPRIATE FRAME RATING TO ACCOMMODATE FEEDER WIRE SIZE AND BRANCH CIRCUIT WIRES FOR ALL BEAKERS ON THIS PROJECT

PANEL A4 200 MCB   ISOLATED GROUND BAR

SERVICE 120/208V,3ø,4 WIRE   PHASE   AIC 22,000 RMS   NEMA 3R

CONDUIT & WIRE	CRT#	BKR/P	ITEM DESCRIPTION	AMPS	A	B	C	AMPS	ITEM DESCRIPTION	BKR/P	CRT#	CONDUIT & WIRE
	1			16.0	27.0			11.0			2	
1 - 3/4"C w / 4-#10 + 1-#10(G)EA	3	25/3	HP-1	16.0		27.0		11.0	HP-2	15/3	4	1 - 3/4"C w / 4-#12 + 1-#12(G)EA
	5			16.0			27.0	11.0			6	
	7			9.0	32.0			23.0			8	
1 - 3/4"C w / 4-#12 + 1-#12(G)EA	9	15/3	HP-3	9.0		32.0		23.0	HP-4	40/3	10	1 - 3/4"C w / 4-#8 + 1-#10(G)EA
	11			9.0			32.0	23.0			12	
	13			23.0	46.0			23.0			14	
1 - 3/4"C w / 4-#8 + 1-#10(G)EA	15	40/3	HP-5	23.0		46.0		23.0	HP-6	40/3	16	1 - 3/4"C w / 4-#8 + 1-#10(G)EA
	17			23.0			46.0	23.0			18	
	19			16.0	32.0			16.0			20	
	21			0.0		16.0		16.0	HP-7	25/3	22	1 - 3/4"C w / 4-#10 + 1-#10(G)EA
	23			16.0			32.0	16.0			24	
	25			0.0	0.0			0.0			26	
	27	15/2	SPARE	0.0		0.0		0.0			28	
	29			0.0			0.0	0.0			30	
	31			0.0	0.0			0.0			32	
	33			0.0		0.0		0.0			34	
	35			0.0			0.0	0.0			36	
	37			0.0	0.0			0.0			38	
	39			0.0		0.0		0.0			40	
	41			0.0			0.0	0.0			42	
				TOTAL	137.0	121.0	137.0					

CONTRACTOR SHALL SUPPLY APPROPRIATE FRAME RATING TO ACCOMMODATE FEEDER WIRE SIZE AND BRANCH CIRCUIT WIRES FOR ALL BEAKERS ON THIS PROJECT

PANEL B1 300 MCB   ISOLATED GROUND KIT

SERVICE 120/208V,3ø,4 WIRE   PHASE   AIC 22,000 RMS   NEMA 1

CONDUIT & WIRE	CRT#	BKR/P	ITEM DESCRIPTION	AMPS	A	B	C	AMPS	ITEM DESCRIPTION	BKR/P	CRT#	CONDUIT & WIRE
1 - 3/4"C w / 2-#10 + 1-#10(G)EA	1	30/2	EWH-65	22.0	62.0			40.0	IGNITION OVEN	50/2	2	1 - 3/4"C w / 3-#6 + 1-#10(G)EA
	3			22.0		62.0		40.0			4	
1 - 3/4"C w / 2-#12 + 1-#12(G)EA	5	20/1	LAB LIGHTS	9.7			9.7	0.0	SPARE	20/1	6	
1 - 3/4"C w / 2-#12 + 1-#12(G)EA	7	20/1	SHOP HALL LIGHTS	4.3	11.3			7.0	INT. LIGHTS	20/1	8	1 - 3/4"C w / 2-#12 + 1-#12(G)EA
1 - 3/4"C w / 2-#12 + 1-#12(G)EA	9	20/1	CREW RM LIGHTS	5.0		9.7		4.7	MAT. STRG. LIGHTS	20/1	10	1 - 3/4"C w / 2-#12 + 1-#12(G)EA
1 - 3/4"C w / 2-#12 + 1-#12(G)EA	11	20/1	SHOP STG. LIGHTS	3.6			13.6	10.0	SHOP LIGHTS	20/1	12	1 - 3/4"C w / 2-#12 + 1-#12(G)EA
1 - 3/4"C w / 2-#12 + 1-#12(G)EA	13	20/1	SHOP LIGHTS	12.5	14.3			1.8	EF-10	15/1	14	1 - 3/4"C w / 2-#12 + 1-#12(G)EA
1 - 3/4"C w / 2-#12 + 1-#12(G)EA	15	20/1	RECEPTACLES	6.0		16.0		10.0	REFRIDGERATOR	20/1	16	1 - 3/4"C w / 2-#12 + 1-#12(G)EA
1 - 3/4"C w / 2-#12 + 1-#12(G)EA	17	20/1	RECEPTACLES	6.0			9.0	3.0	RECEPTACLES	20/1	18	1 - 3/4"C w / 2-#12 + 1-#12(G)EA
1 - 3/4"C w / 2-#12 + 1-#12(G)EA	19	20/1	RECEPTACLES	3.0	6.0			3.0	RECEPTACLES	20/1	20	1 - 3/4"C w / 2-#12 + 1-#12(G)EA
1 - 3/4"C w / 2-#12 + 1-#12(G)EA	21	20/1	RECEPTACLES	4.5		8.9		4.4	EF-8	15/1	22	1 - 3/4"C w / 2-#12 + 1-#12(G)EA
1 - 3/4"C w / 2-#12 + 1-#12(G)EA	23	20/1	RECEPTACLES	4.5			11.0	6.5	EF-11 / EF-12	20/1	24	1 - 3/4"C w / 2-#12 + 1-#12(G)EA
1 - 3/4"C w / 2-#12 + 1-#12(G)EA	25	**20/1	EWC	5.0	20.0			15.0	ICE MAKER	20/1	26	1 - 3/4"C w / 2-#12 + 1-#12(G)EA
1 - 3/4"C w / 2-#12 + 1-#12(G)EA	27	20/1	HTR-5	4.0		48.0		44.0			28	
1 - 3/4"C w / 2-#12 + 1-#12(G)EA	29	20/1	RECEPTACLES	4.5			48.5	44.0	AHU-7	45/3	30	1 - 1"C w / 4-#6 + 1-#10(G)EA
1 - 3/4"C w / 2-#12 + 1-#12(G)EA	31	20/1	EF-9	1.0	45.0			44.0			32	
	33	20/1	SPARE	0.0		11.0		11.0	CU-2 / AC-2	15/2	34	1 - 3/4"C w / 3-#12 + 1-#12(G)EA
	35	20/1	SPARE	0.0			11.0	11.0			36	
	37			44.0	60.0			16.0			38	
1 - 1"C w / 4-#6 + 1-#10(G)EA	39	45/3	AHU-8	44.0		60.0		16.0	HP-8	25/3	40	1 - 3/4"C w / 4-#8 + 1-#10(G)EA
	41			44.0			60.0	16.0			42	
				TOTAL	218.6	215.6	162.8					

** GFCI BREAKER

CONTRACTOR SHALL SUPPLY APPROPRIATE FRAME RATING TO ACCOMMODATE FEEDER WIRE SIZE AND BRANCH CIRCUIT WIRES FOR ALL BEAKERS ON THIS PROJECT

PANEL B2 125 MCB   ISOLATED GROUND KIT

SERVICE 120/208V,3ø,4 WIRE   PHASE   AIC 10,000 RMS   NEMA 1

CONDUIT & WIRE	CRT#	BKR/P	ITEM DESCRIPTION	AMPS	A	B	C	AMPS	ITEM DESCRIPTION	BKR/P	CRT#	CONDUIT & WIRE
1 - 3/4"C w / 2-#12 + 1-#12(G)EA	1	20/1	RECEPTACLES	4.5	4.5			0.0	SPARE	20/1	2	
	3	20/1	SPARE	0.0		0.0		0.0	SPARE	20/1	4	
	5	20/1	SPARE	0.0			0.0	0.0	SPARE	20/1	6	
	7	20/1	SPARE	0.0	1.5			1.5	RECEPTACLES	20/1	8	1 - 3/4"C w / 2-#12 + 1-#12(G)EA
	9	20/1	SPARE	0.0		1.5		1.5	RECEPTACLES	20/1	10	1 - 3/4"C w / 2-#12 + 1-#12(G)EA
1 - 3/4"C w / 2-#12 + 1-#12(G)EA	11	15/1	EF-2	5.8			7.3	1.5	RECEPTACLES	20/1	12	1 - 3/4"C w / 2-#12 + 1-#12(G)EA
1 - 3/4"C w / 2-#12 + 1-#12(G)EA	13	15/1	EF-3	5.8	8.8			3.0	RECEPTACLES	20/1	14	1 - 3/4"C w / 2-#12 + 1-#12(G)EA
1 - 3/4"C w / 2-#12 + 1-#12(G)EA	15	20/1	EF-4&5	11.6		13.1		1.5	RECEPTACLES	20/1	16	1 - 3/4"C w / 2-#12 + 1-#12(G)EA
1 - 3/4"C w / 2-#12 + 1-#12(G)EA	17	25/1	EF-V	13.8			15.3	1.5	RECEPTACLES	20/1	18	1 - 3/4"C w / 2-#12 + 1-#12(G)EA
1 - 3/4"C w / 2-#12 + 1-#12(G)EA	19	25/1	EF-WW	12.8	14.3			1.5	RECEPTACLES	20/1	20	1 - 3/4"C w / 2-#12 + 1-#12(G)EA
1 - 3/4"C w / 2-#12 + 1-#12(G)EA	21	20/1	RECEPTACLES	6.0		7.5		1.5	RECEPTACLES	20/1	22	1 - 3/4"C w / 2-#12 + 1-#12(G)EA
1 - 3/4"C w / 2-#12 + 1-#12(G)EA	23	15/1	HTR-2	4.0			5.5	1.5	RECEPTACLES	20/1	24	1 - 3/4"C w / 2-#12 + 1-#12(G)EA
1 - 3/4"C w / 2-#12 + 1-#12(G)EA	25	15/1	HTR-1,3,4	12.0	19.5			7.5	RECEPTACLES	20/1	26	1 - 3/4"C w / 2-#12 + 1-#12(G)EA
1 - 3/4"C w / 2-#12 + 1-#12(G)EA	27	20/1	EXT. LIGHTS	8.8		13.3		4.5	RECEPTACLES	20/1	28	1 - 3/4"C w / 2-#12 + 1-#12(G)EA
1 - 3/4"C w / 2-#10 + 1-#10(G)EA	29	20/1	EXT. LIGHTS	10.5			15.0	4.5	RECEPTACLES	20/1	30	1 - 3/4"C w / 2-#12 + 1-#12(G)EA
	31	20/1	SPARE	0.0	6.0			6.0	RECEPTACLES	20/1	32	1 - 3/4"C w / 2-#12 + 1-#12(G)EA
1 - 3/4"C w / 2-#12 + 1-#12(G)EA	33	20/1	CANOPY LIGHTS	3.0		7.5		4.5	RECEPTACLES	20/1	34	1 - 3/4"C w / 2-#12 + 1-#12(G)EA
	35	20/1	SPARE	0.0			1.5	1.5	RECEPTACLES	20/1	36	1 - 3/4"C w / 2-#12 + 1-#12(G)EA
	37			25.0	31.0			6.0	RECEPTACLES	20/1	38	1 - 3/4"C w / 2-#12 + 1-#12(G)EA
1 - 3/4"C w / 3-#10 + 1-#10(G)EA	39	50/3	AIR COMPRESSOR	25.0		35.0		10.0	RECEPTACLES	20/1	40	1 - 3/4"C w / 2-#12 + 1-#12(G)EA
	41			25.0			35.0	10.0	RECEPTACLES	20/1	42	1 - 3/4"C w / 2-#12 + 1-#12(G)EA
				TOTAL	85.6	77.9	79.6					

CONTRACTOR SHALL SUPPLY APPROPRIATE FRAME RATING TO ACCOMMODATE FEEDER WIRE SIZE AND BRANCH CIRCUIT WIRES FOR ALL BEAKERS ON THIS PROJECT

PANEL C 200 MCB

SERVICE 120/208V,3ø,4 WIRE   PHASE   AIC 10,000 RMS   NEMA 1

CONDUIT & WIRE	CRT#	BKR/P	ITEM DESCRIPTION	AMPS	A	B	C	AMPS	ITEM DESCRIPTION	BKR/P	CRT#	CONDUIT & WIRE
1 - 3/4"C w / 2-#12 + 1-#12(G)EA	1	20/1	INT. LIGHTS	8.6	17.2			8.6	INT. LIGHTS	20/1	2	1 - 3/4"C w / 2-#12 + 1-#12(G)EA
1 - 3/4"C w / 2-#12 + 1-#12(G)EA	3	20/1	EXT. LIGHTS	7.0		14.0		7.0	EXT. LIGHTS	20/1	4	1 - 3/4"C w / 2-#12 + 1-#12(G)EA
1 - 3/4"C w / 2-#12 + 1-#12(G)EA	5	20/1	RECEPTACLES	3.0			7.5	4.5	RECEPTACLES	20/1	6	1 - 3/4"C w / 2-#12 + 1-#12(G)EA
1 - 3/4"C w / 2-#12 + 1-#12(G)EA	7	20/1	RECEPTACLES	4.5	9.0			4.5	RECEPTACLES	20/1	8	1 - 3/4"C w / 2-#12 + 1-#12(G)EA
	9	20/1	SPARE	0.0		0.0		0.0	SPARE	20/1	10	
	11	20/1	SPARE	0.0			0.0	0.0	SPARE	20/1	12	
	13	20/1	SPARE	0.0	0.0			0.0	SPARE	20/1	14	
	15	20/1	SPARE	0.0		0.0		0.0	SPARE	20/1	16	
	17		SPACE	0.0			0.0	0.0	SPACE		18	
	19		ASPHALT	115.0	115.0			0.0	SPACE		20	
1 - 1 1/2"C w / 4-#1/0 + 1-#8(G)EA	21	150/3	FLOOR MOUNTED	115.0		115.0		0.0	SPACE		22	
	23		DRY CELL TRANSFORMER	115.0			115.0	0.0	SPACE		24	
	25			0.0	0.0			0.0			26	
	27			0.0		0.0		0.0			28	
	29			0.0			0.0	0.0			30	
	31			0.0	0.0			0.0			32	
	33			0.0		0.0		0.0			34	
	35			0.0			0.0	0.0			36	
	37			0.0	0.0			0.0			38	
	39			0.0		0.0		0.0			40	
	41			0.0			0.0	0.0			42	
				TOTAL	141.2	129.0	122.5					

CONTRACTOR SHALL SUPPLY APPROPRIATE FRAME RATING TO ACCOMMODATE FEEDER WIRE SIZE AND BRANCH CIRCUIT WIRES FOR ALL BEAKERS ON THIS PROJECT

ELECTRICAL PANELBOARD SCHEDULES - 1

NOTE: THIS DRAWING WAS CREATED FOR PRODUCTION ON 22" x 34" SHEET SIZE. DO NOT SCALE PRINTS.

Texas Department of Transportation
125 E. 11th Street
Austin, Texas 78701-2483
(512) 416-3048

Copyright © 2005 Texas Department of Transportation

THIS DOCUMENT IS RELEASED FOR THE PURPOSE OF
INFORMATION ONLY
NOT FOR REGULATORY
APPROVAL, PERMITTING,
OR CONSTRUCTION.

WACO AREA ENGINEER
AND MAINTENANCE FACILITY
WACO, MCLENNAN COUNTY
WACO DISTRICT

Revisions

Drawn by: CON
Project No. CBC4704-00672
Date 05.21.2007
Sheet No.
E4.1
of 15 E sheets

CADFILE: T:\MNTFMD02FTW\CBC4704-00-83702-77-47040083?\Acad\prototypical pdfs\waco\Acad\MEP\ELEC\E4_1.dwg Plotted: Fri. Aug. 07, 2009 @ 1:27 PM By: MBAZAN

PANEL WB 125 MCB

SERVICE 120/208V,3ø,4 WIRE — PHASE — AIC 22,000 RMS — NEMA 1

CONDUIT & WIRE	CRT#	BKR/P	ITEM DESCRIPTION	AMPS	A	B	C	AMPS	ITEM DESCRIPTION	BKR/P	CRT#	CONDUIT & WIRE
1 - 3/4"C w / 3-#12 + 1-#12(G)EA	1	20/2	RS-I	16.0	28.5			12.5	HTR	20/1	2	1 - 3/4"C w / 2-#12 + 1-#12(G)EA
	3			16.0		25.9		9.9	O/S LGTS	20/1	4	1 - 3/4"C w / 2-#12 + 1-#12(G)EA
1 - 3/4"C w / 3-#12 + 1-#12(G)EA	5	20/2	RS-I	5.0			20.0	15.0	LGTS	20/1	6	1 - 3/4"C w / 2-#12 + 1-#12(G)EA
	7			5.0	7.0			2.0	RS-1	20/1	8	1 - 3/4"C w / 2-#12 + 1-#12(G)EA
1 - 3/4"C w / 3-#10 + 1-#10(G)EA	9	30/2	AIR COMPRESSOR	15.0		17.3		2.3	LGTS	20/1	10	1 - 3/4"C w / 2-#12 + 1-#12(G)EA
	11			15.0			16.5	1.5	RECEPTACLE	20/1	12	1 - 3/4"C w / 2-#12 + 1-#12(G)EA
1 - 3/4"C w / 2-#6 + 1-#10(G)EA	13	50/2	PRESSURE WASHER	40.0	43.0			3.0	RECEPTACLE	20/1	14	1 - 3/4"C w / 2-#12 + 1-#12(G)EA
	15			40.0		41.0		1.0	RS-1	20/1	16	1 - 3/4"C w / 2-#12 + 1-#12(G)EA
	17	30/2	SPARE	0.0			0.0	0.0	SPARE	20/1	18	
	19			0.0	0.0			0.0	SPARE	20/1	20	
	21		SPACE	0.0		0.0		0.0	SPARE	20/1	22	
	23		SPACE	0.0			0.0	0.0	SPACE		24	
	25		SPACE	0.0	0.0			0.0	SPACE		26	
	27		SPACE	0.0		0.0		0.0	SPACE		28	
	29		SPACE	0.0			0.0	0.0	SPACE		30	
	31			0.0	0.0			0.0			32	
	33			0.0		0.0		0.0			34	
	35			0.0			0.0	0.0			36	
	37			0.0	0.0			0.0			38	
	39			0.0		0.0		0.0			40	
	41			0.0			0.0	0.0			42	
				TOTAL	78.5	84.2	36.5					

CONTRACTOR SHALL SUPPLY APPROPRIATE FRAME RATING TO ACCOMMODATE FEEDER WIRE SIZE AND BRANCH CIRCUIT WIRES FOR ALL BEAKERS ON THIS PROJECT

PANEL EDP 60 MCB

ISOLATED GROUND BAR

SERVICE 120/208V,3ø,4 WIRE — PHASE — AIC 22,000 RMS — NEMA 1

CONDUIT & WIRE	CRT#	BKR/P	ITEM DESCRIPTION	AMPS	A	B	C	AMPS	ITEM DESCRIPTION	BKR/P	CRT#	CONDUIT & WIRE
1 - 3/4"C w / 4-#8 + 1-#10(G)EA	1	40/3	PANEL FE	34.0	60.0			26.0	PANEL AE	40/3	2	1 - 1 1/4"C w / 4-#4 + 2-#10(G)EA
	3			22.5		56.5		34.0			4	
	5			24.5			46.0	21.5			6	
1 - 3/4"C w / 2-#10 + 1-#10(G)EA	7	20/1	GEN SET HEATER	5.0	9.5			4.5	IG-RECEPTACLES	20/1	8	1 - 3/4"C w / 2-#12 + 2-#12(G)EA
1 - 3/4"C w / 2-#12 + 1-#12(G)EA	9	20/1	GEN SET CHARGER	2.0		2.0		0.0			10	
	11			0.0			0.0	0.0			12	
	13			0.0	0.0			0.0			14	
	15			0.0		0.0		0.0			16	
	17			0.0			0.0	0.0			18	
	19			0.0	0.0			0.0			20	
	21			0.0		0.0		0.0			22	
	23			0.0			0.0	0.0			24	
	25			0.0	0.0			0.0			26	
	27			0.0		0.0		0.0			28	
	29			0.0			0.0	0.0			30	
	31			0.0	0.0			0.0			32	
	33			0.0		0.0		0.0			34	
	35			0.0			0.0	0.0			36	
	37			0.0	0.0			0.0			38	
	39			0.0		0.0		0.0			40	
	41			0.0			0.0	0.0			42	
				TOTAL	69.5	58.5	46.0					

CONTRACTOR SHALL SUPPLY APPROPRIATE FRAME RATING TO ACCOMMODATE FEEDER WIRE SIZE AND BRANCH CIRCUIT WIRES FOR ALL BEAKERS ON THIS PROJECT

PANEL AE 40A MCB

ISOLATED GROUND BAR

SERVICE 120/208V,3ø,4 WIRE — PHASE — AIC 10,000 RMS — NEMA 1

CONDUIT & WIRE	CRT#	BKR/P	ITEM DESCRIPTION	AMPS	A	B	C	AMPS	ITEM DESCRIPTION	BKR/P	CRT#	CONDUIT & WIRE
	1	20/1	SPARE	0.0	3.0			3.0	IG-RECEPTACLES	20/1	2	1 - 3/4"C w / 2-#12 + 2-#12(G)EA
E2.4 MOD. FURN. WIRE STANDARD	3	20/1	MODULAR FURNITURE	9.0		10.5		1.5	RECEPTACLE	20/1	4	1 - 3/4"C w / 2-#12 + 1-#12(G)EA
E2.4 MOD. FURN. WIRE STANDARD	5	20/1	MODULAR FURNITURE	9.0			10.5	1.5	IG-RECEPTACLES	20/1	6	1 - 3/4"C w / 2-#12 + 2-#12(G)EA
E2.4 MOD. FURN. WIRE STANDARD	7	20/1	MODULAR FURNITURE	9.0	12.0			3.0	IG-RECEPTACLES	20/1	8	1 - 3/4"C w / 2-#12 + 2-#12(G)EA
E2.4 MOD. FURN. WIRE STANDARD	9	20/1	IG MOD FURNITURE	9.0		9.0		0.0	SPARE	20/1	10	
	11			0.0			11.0	11.0	CU-1 / AC-1	15/2	12	1 - 3/4"C w / 2-#12 + 1-#12(G)EA
	13			0.0	11.0			11.0			14	
1 - 3/4"C w / 2-#10 + 1-#10(G)EA	15	20/1	INT. LIGHTS	14.5		14.5		0.0			16	
	17			0.0			0.0	0.0			18	
	19			0.0	0.0			0.0			20	
	21			0.0		0.0		0.0			22	
	23			0.0			0.0	0.0			24	
	25			0.0	0.0			0.0			26	
	27			0.0		0.0		0.0			28	
	29			0.0			0.0	0.0			30	
	31			0.0	0.0			0.0			32	
	33			0.0		0.0		0.0			34	
	35			0.0			0.0	0.0			36	
	37			0.0	0.0			0.0			38	
	39			0.0		0.0		0.0			40	
	41			0.0			0.0	0.0			42	
				TOTAL	26.0	34.0	21.5					

CONTRACTOR SHALL SUPPLY APPROPRIATE FRAME RATING TO ACCOMMODATE FEEDER WIRE SIZE AND BRANCH CIRCUIT WIRES FOR ALL BEAKERS ON THIS PROJECT

PANEL FE 40 MCB

SERVICE 120/208V,3ø,4 WIRE — PHASE — AIC 10,000 RMS — NEMA 1

CONDUIT & WIRE	CRT#	BKR/P	ITEM DESCRIPTION	AMPS	A	B	C	AMPS	ITEM DESCRIPTION	BKR/P	CRT#	CONDUIT & WIRE
1 - 3/4"C w / 3-#12 + 1-#12(G)EA	1	*20/2	DIESEL PUMP	6.5	8.5			2.0	DIESEL DISPENSER	*20/1	2	1 - 3/4"C w / 2-#12 + 1-#12(G)EA
	3			6.5		6.5		0.0	SWITCHED NEUTRAL		4	
	5		SWITCHED NEUTRAL	0.0			0.0	0.0	SHUNT TRIP		6	
	7		SHUNT TRIP	0.0	2.0			2.0	GASOLINE DISPENSER	*20/1	8	1 - 3/4"C w / 2-#12 + 1-#12(G)EA
1 - 3/4"C w / 3-#12 + 1-#12(G)EA	9	*20/2	GASOLINE PUMP	6.5		6.5		0.0	SWITCHED NEUTRAL		10	
	11			6.5			6.5	0.0	SHUNT TRIP		12	
	13		SWITCHED NEUTRAL	0.0	2.0			2.0	SPARE	*20/1	14	1 - 3/4"C w / 2-#12 + 1-#12(G)EA
	15		SHUNT TRIP	0.0		0.0		0.0	SWITCHED NEUTRAL		16	
1 - 3/4"C w / 3-#10 + 1-#10(G)EA	17	*20/2	LPG FUEL STATION	12.0			12.0	0.0	SHUNT TRIP		18	
	19			12.0	12.0			0.0	SPACE		20	
	21		SWITCHED NEUTRAL	0.0		2.0		2.0	EPO / SHUNT TRIP CONTROL	20/1	22	1 - 3/4"C w / 2-#12 + 1-#12(G)EA
	23		SHUNT TRIP	0.0			5.0	5.0	TMS-2000	20/1	24	1 - 3/4"C w / 2-#10 + 3-#10(G)EA
	25	*20/2	SPARE	6.5	7.5			1.0	TVSS	30/3	26	
	27			6.5		7.5		1.0			28	
	29		SWITCHED NEUTRAL	0.0			1.0	1.0			30	
	31		SHUNT TRIP	0.0	0.0			0.0	FUTURE FUEL MGMT.	*20/1	32	
	33	*20/2	SPARE	0.0		0.0		0.0	SWITCHED NEUTRAL		34	
	35			0.0			0.0	0.0	SHUNT TRIP		36	
	37		SWICHED NEUTRAL	0.0	2.0			2.0	LC1002 ANNUNCIATOR	*20/1	38	1 - 3/4"C w / 2-#12 + 1-#12(G)EA
	39		SHUNT TRIP	0.0		0.0		0.0	SWITCHED NEUTRAL		40	
	41		SPACE	0.0			0.0	0.0	SHUNT TRIP		42	
				TOTAL	34.0	22.5	24.5					

*SWITCHED NEUTRAL CIRCUIT BREAKER W/ SHUNT TRI ACCESSORY

CONTRACTOR SHALL SUPPLY APPROPRIATE FRAME RATING TO ACCOMMODATE FEEDER WIRE SIZE AND BRANCH CIRCUIT WIRES FOR ALL BEAKERS ON THIS PROJECT

Texas Department of Transportation
125 E. 11th Street
Austin, Texas 78701-2483
(512) 416-3048

Copyright © 2005 Texas Department of Transportation

THIS DOCUMENT IS RELEASED FOR THE PURPOSE OF INFORMATION ONLY
NOT FOR REGULATORY APPROVAL, PERMITTING, OR CONSTRUCTION.

WACO AREA ENGINEER AND MAINTENANCE FACILITY

WACO, MCLENNAN COUNTY
WACO DISTRICT

Revisions

Drawn by: CON
Project No. CBC4704-00672
Date 05.21.2007
Sheet No.

E4.2

of 15 E sheets

ELECTRICAL PANELBOARD SCHEDULES - 2

NOTE: THIS DRAWING WAS CREATED FOR PRODUCTION ON 22" x 34" SHEET SIZE. DO NOT SCALE PRINTS.

CADFILE: T:\MNTPM\D02FTW\CBC4704-00-83702-77-47040083\Acad\prototypical pdf\waco\Acad\MEP\ELEC\E4_2.dwg Plotted: Fri, Aug. 07, 2009 @ 1:29 PM By: MBAZAN

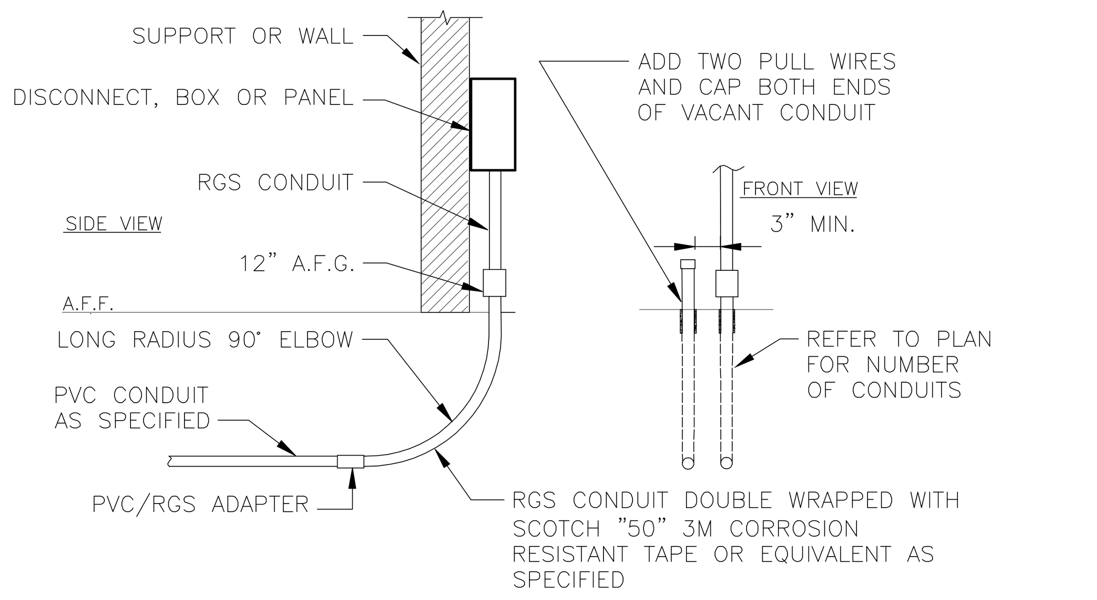

1 STUB UP TO SAFETY SWITCH AND/OR PANEL
SCALE: NOT TO SCALE

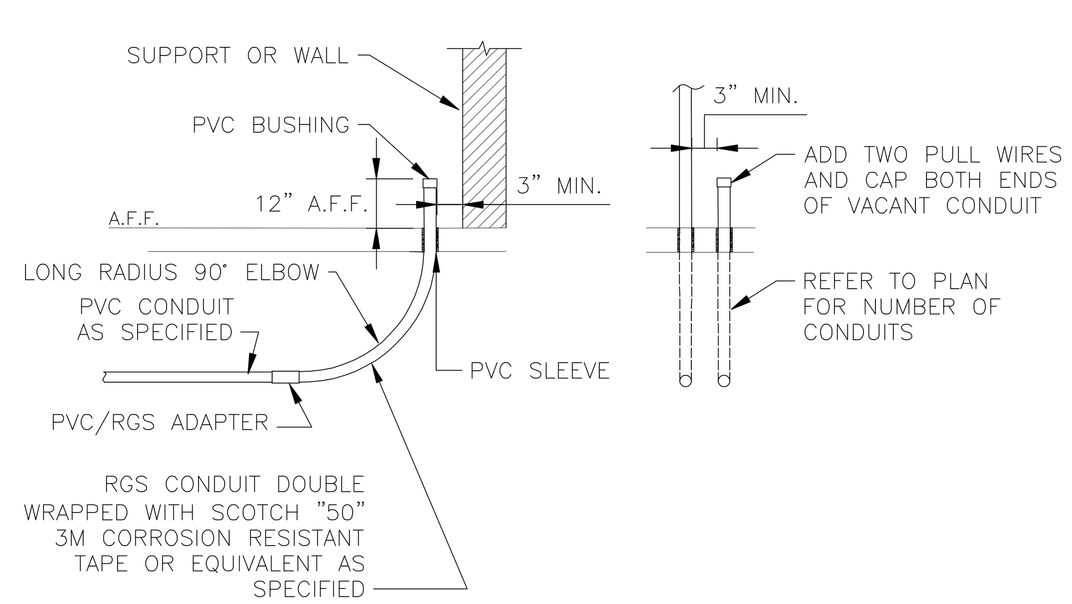

2 VOICE DATA STUB UP DETAIL
SCALE: NOT TO SCALE

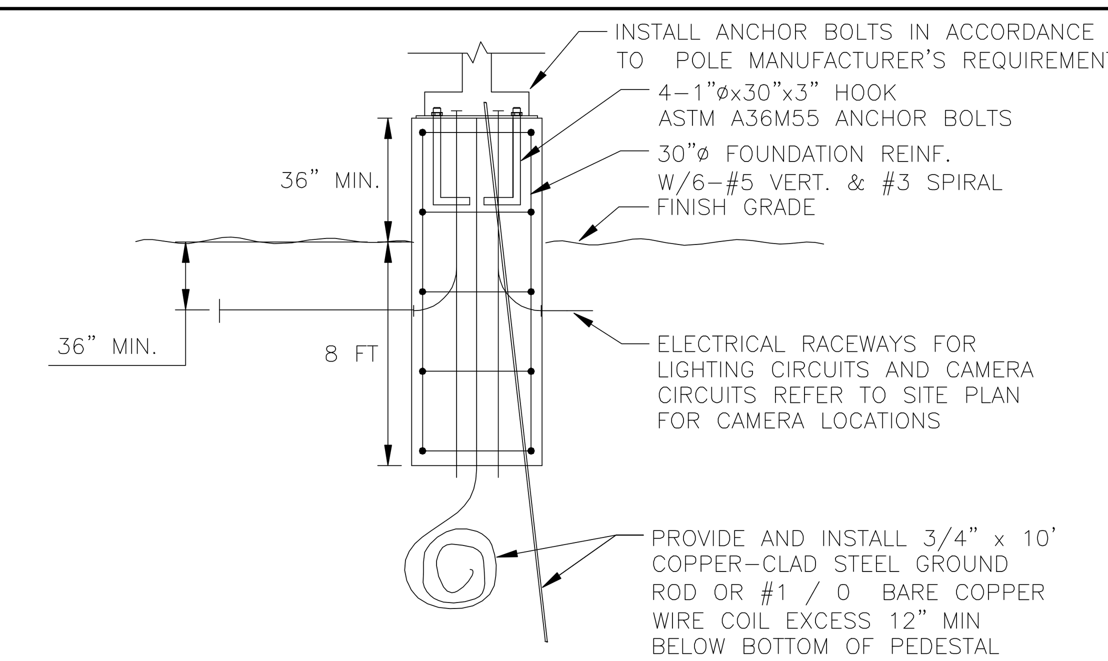

3 SHOE BOX LIGHT STANDARD PEDESTAL
SCALE: NOT TO SCALE

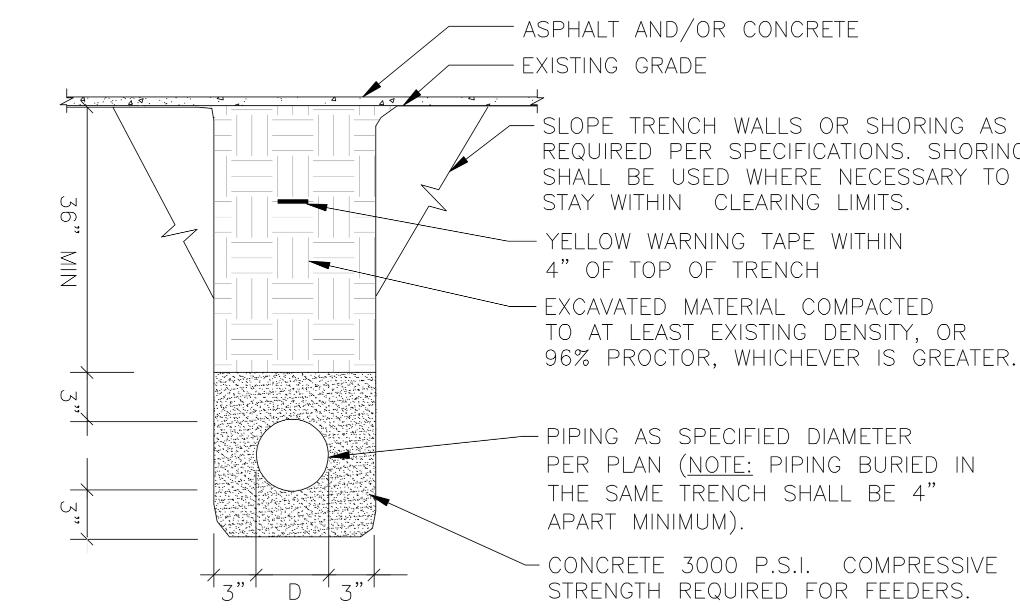

4 ELECTRICAL PAVED AREAS TYPICAL
SCALE: NOT TO SCALE

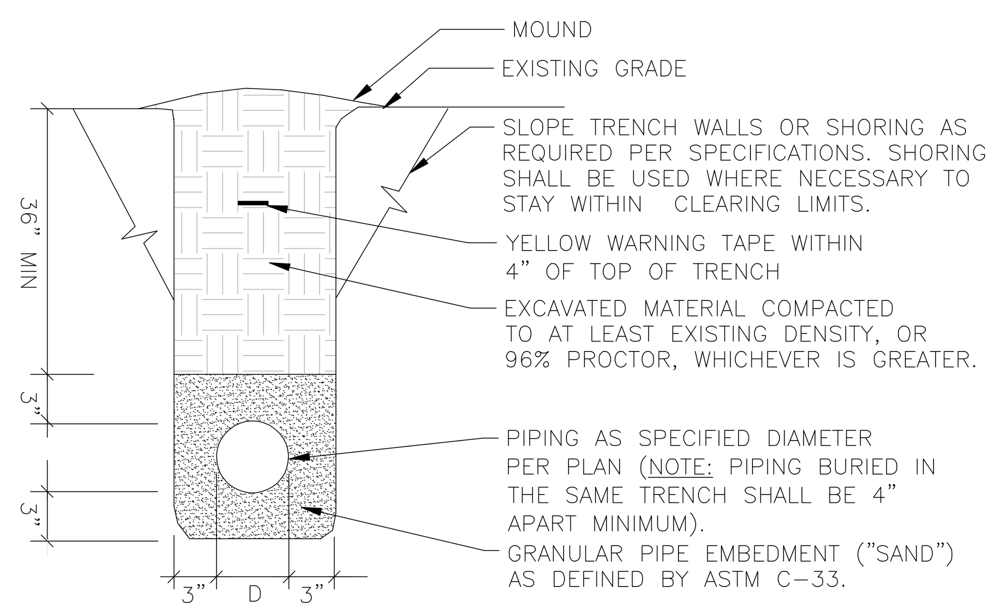

5 ELECTRICAL UNPAVED AREAS TYPICAL
SCALE: NOT TO SCALE

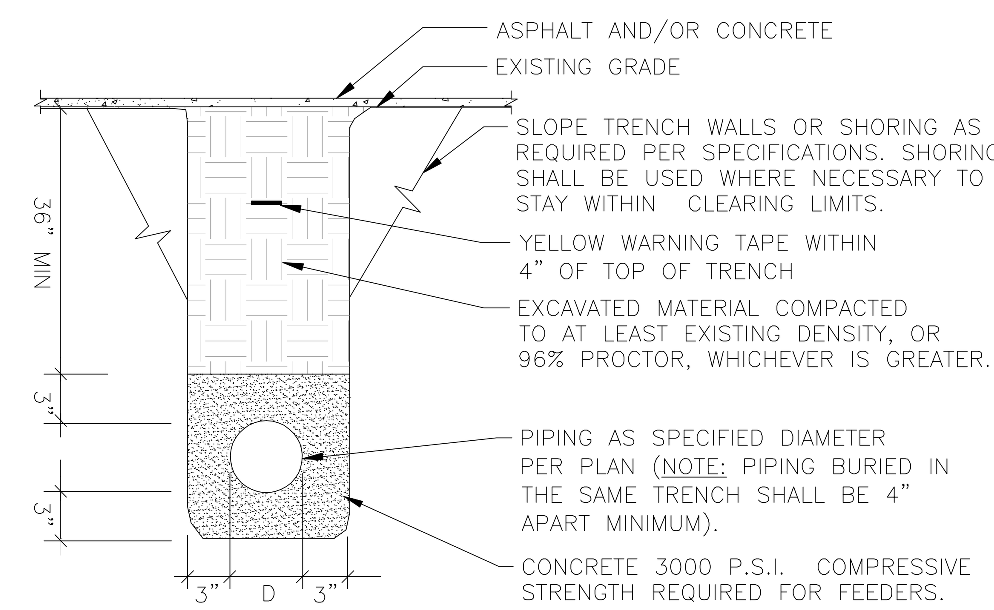

6 VOICE DATA PAVED AREAS TYPICAL
SCALE: NOT TO SCALE

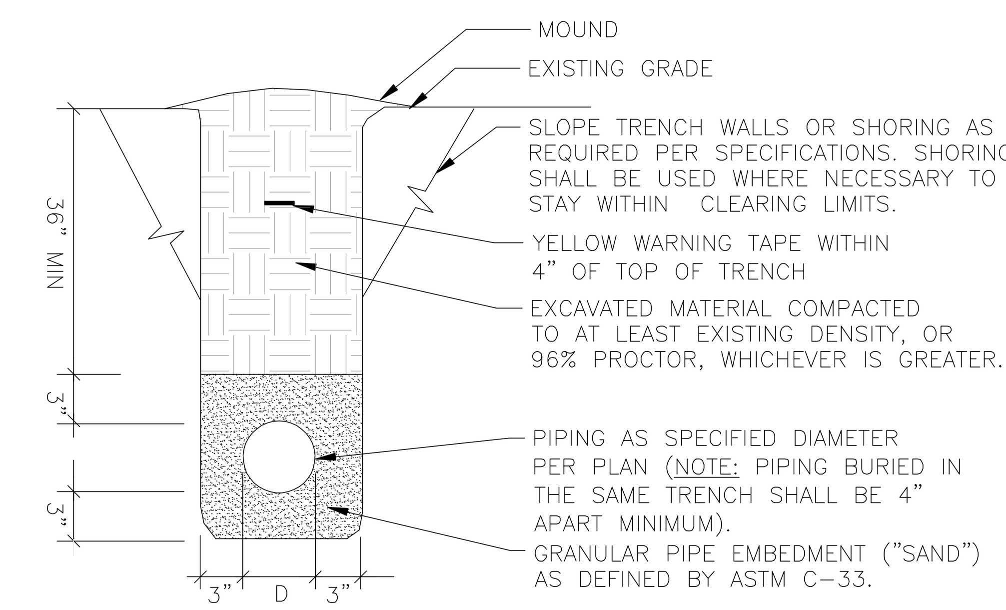

7 VOICE DATA UNPAVED AREAS TYPICAL
SCALE: NOT TO SCALE

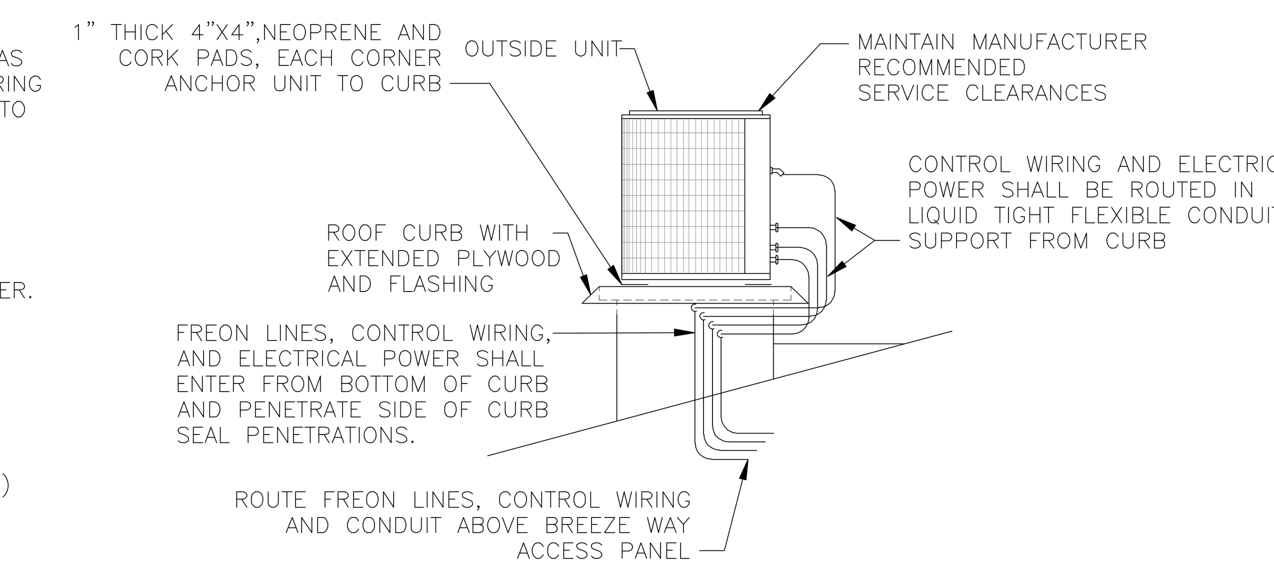

8 OUTSIDE UNIT ROOF CURB
SCALE: NOT TO SCALE

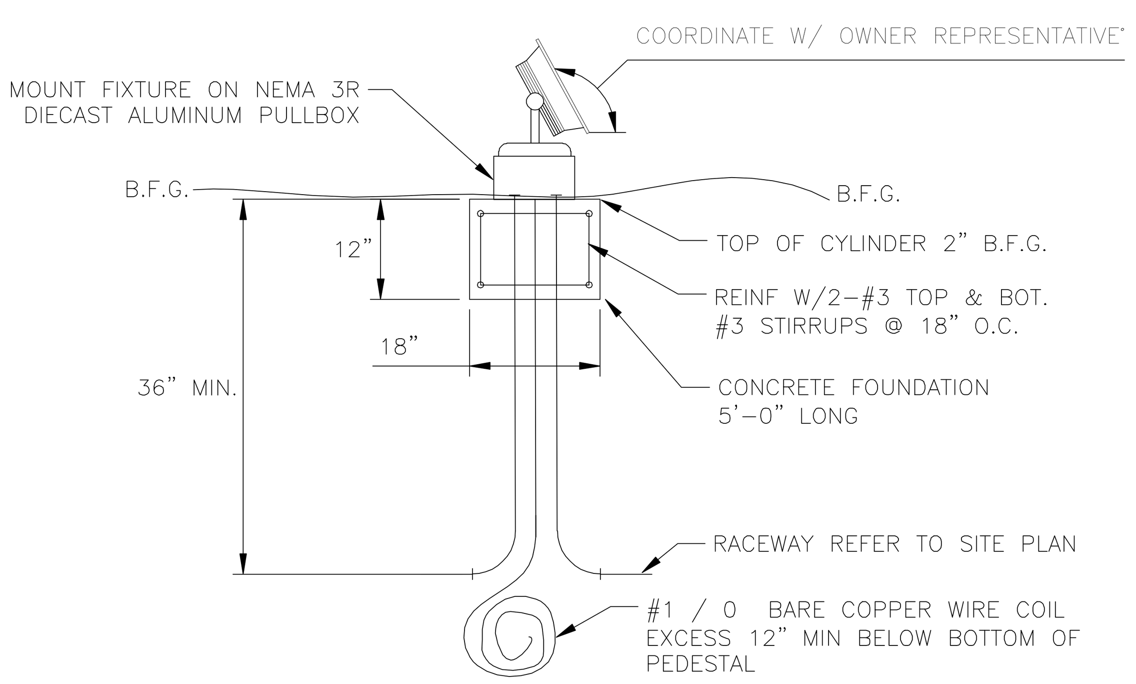

9 SIGN LIGHT ON CONCRETE PEDESTAL
SCALE: NOT TO SCALE

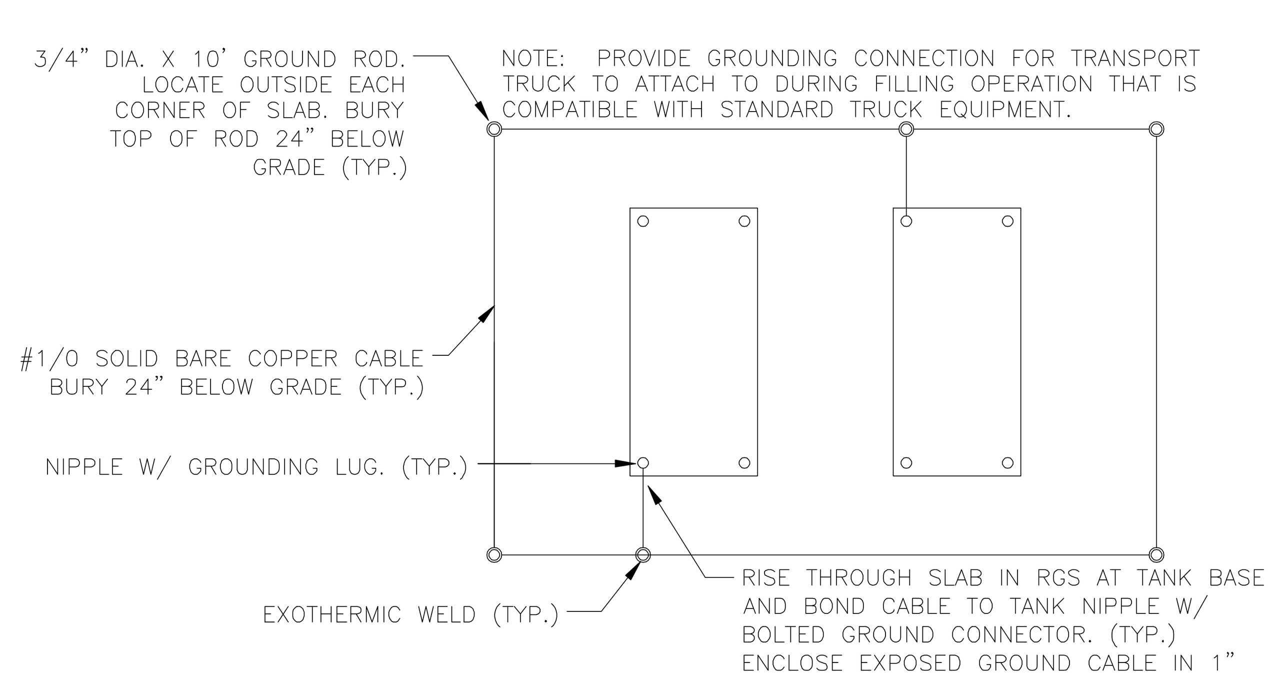

10 TANK GROUNDING SYSTEM
SCALE: NOT TO SCALE

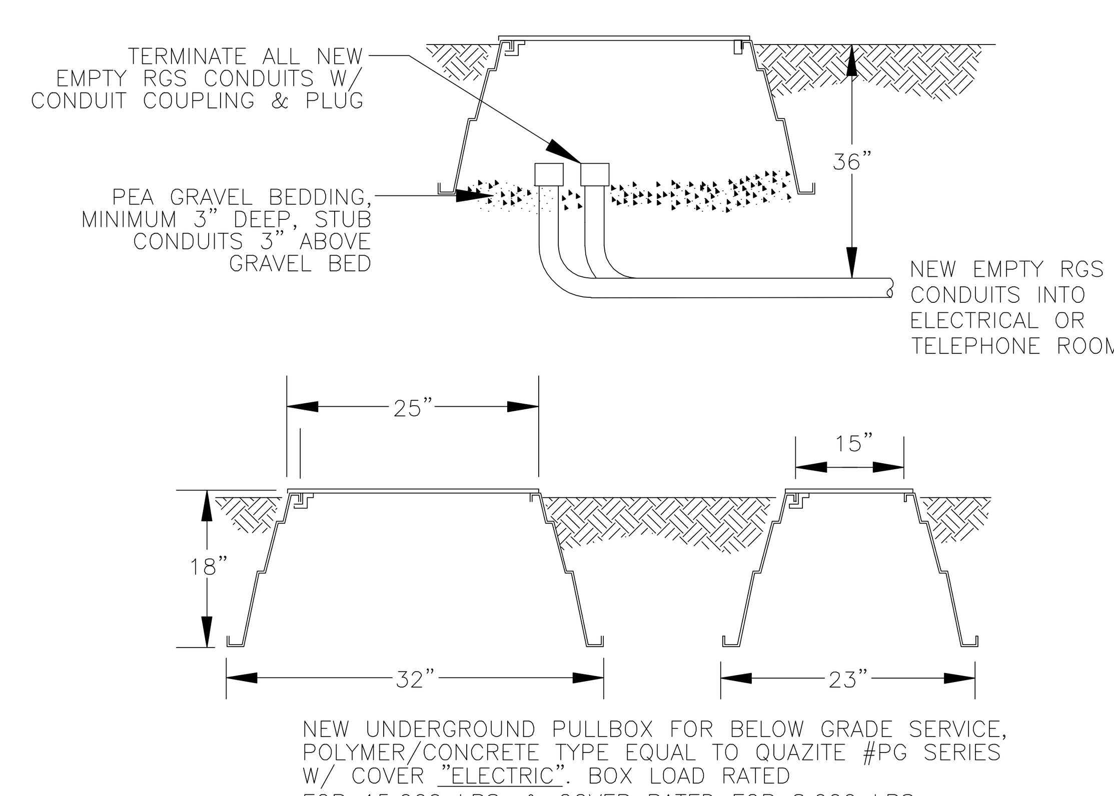

11 UNDERGROUND PULLBOX
SCALE: NOT TO SCALE

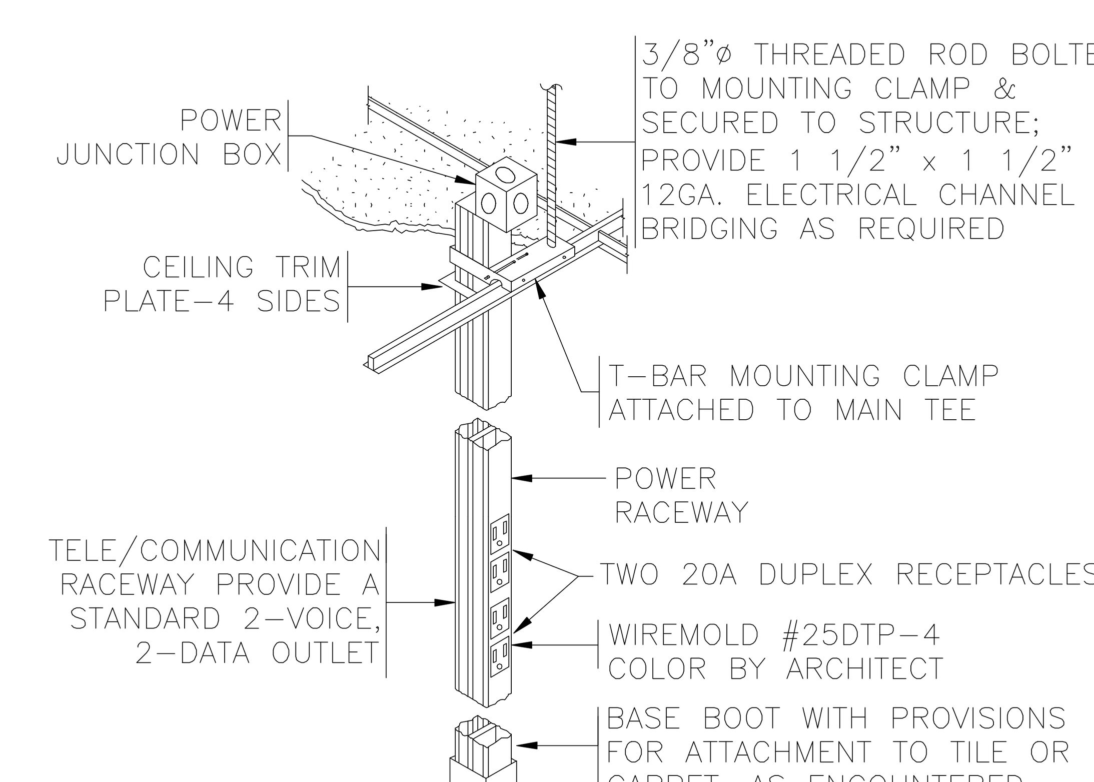

12 DEDICATED CIRCUIT POWER POLE
SCALE: NOT TO SCALE

ELECTRICAL DETAILS - 1

NOTE: THIS DRAWING WAS CREATED FOR PRODUCTION ON 22" x 34" SHEET SIZE. DO NOT SCALE PRINTS.

Texas Department of Transportation
125 E. 11th Street
Austin, Texas 78701-2483
(512) 416-2046

Copyright © 2005 Texas Department of Transportation

THIS DOCUMENT IS RELEASED FOR THE PURPOSE OF INFORMATION ONLY
NOT FOR REGULATORY APPROVAL, PERMITTING, OR CONSTRUCTION.

WACO AREA ENGINEER AND MAINTENANCE FACILITY
WACO, MCLENNAN COUNTY
WACO DISTRICT

Revisions

Drawn by: CON
Project No. CBC4704-00672
Date 05.21.2007
Sheet No.
E5.1
of 15 E sheets

CADFILE: T:\MNTFM\D02FTW\CBC4704-00-537\02-7T-4704-00537\Acad\prototypical pdfs\waco\Acad\MEP\ELEC\E5_1.dwg Plotted: Fri, Aug. 07, 2009 @ 1:29 PM By: MBAZAN

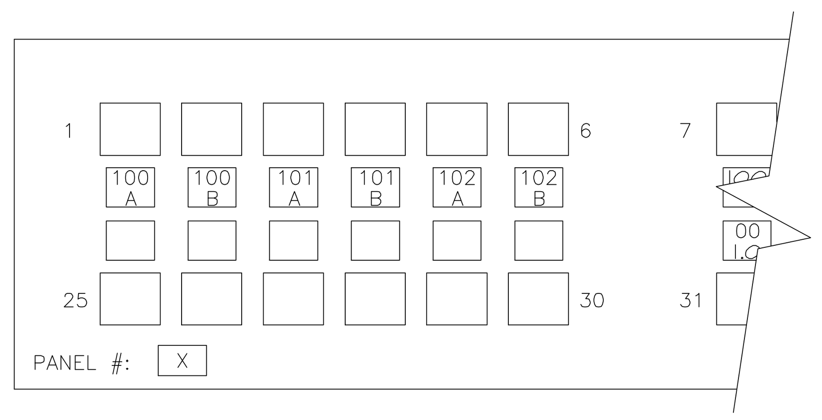

1 TYPICAL CATEGORY 5 PATCH PANEL LABELING
SCALE: NOT TO SCALE

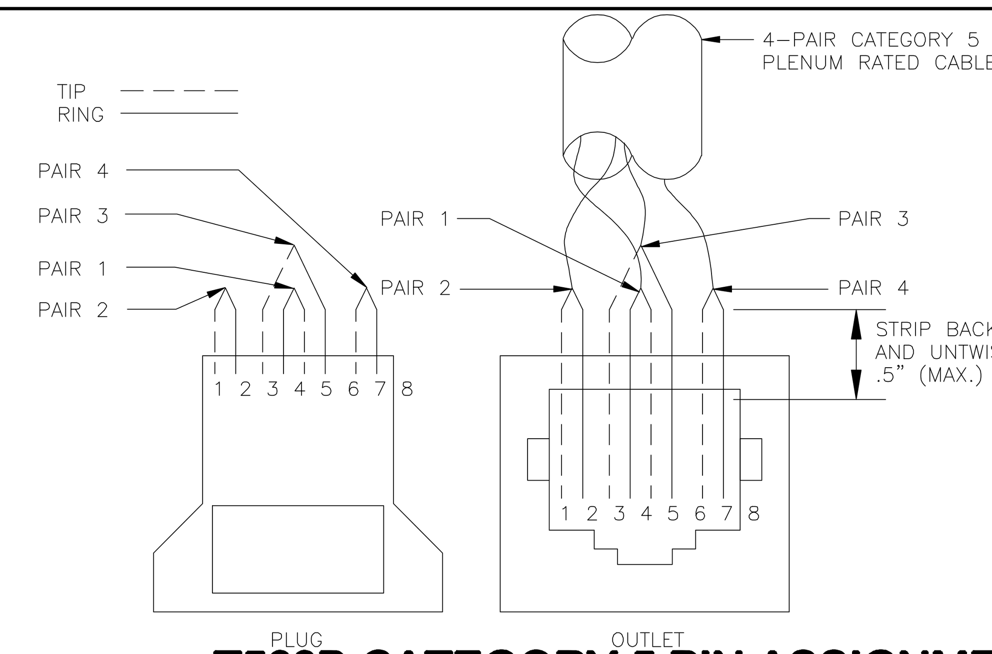

PAIR	COLOR
1	WHITE/BLUE
2	WHITE/ORANGE
3	WHITE/GREEN
4	WHITE/BROWN
5	WHITE/SLATE
6	RED/BLUE
7	RED/ORANGE
8	RED/GREEN
9	RED/BROWN
10	RED/SLATE
11	BLACK/BLUE
12	BLACK/ORANGE
13	BLACK/GREEN
14	BLACK/BROWN
15	BLACK/SLATE
16	YELLOW/BLUE
17	YELLOW/ORANGE
18	YELLOW/GREEN
19	YELLOW/BROWN
20	YELLOW/SLATE
21	VIOLET/BLUE
22	VIOLET/ORANGE
23	VIOLET/GREEN
24	VIOLET/BROWN
25	VIOLET/SLATE

NOTE:
4 PAIR STATION CABLES SHALL HAVE 8-10" OF SLACK AT OUTLET.

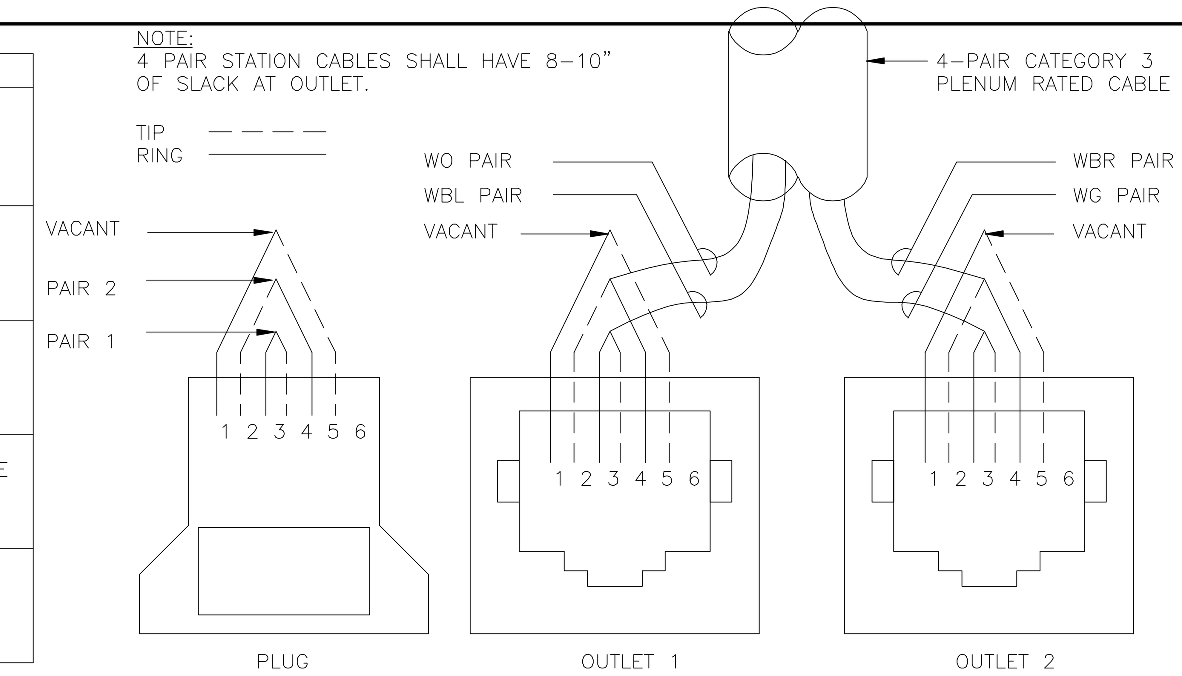

2 T568B CATEGORY 5 PIN ASSIGNMENT & STANDARD TELEPHONE COLOR CODES & USOC CATERGORY 3 PINN ASSIGNMENTS
SCALE: NOT TO SCALE

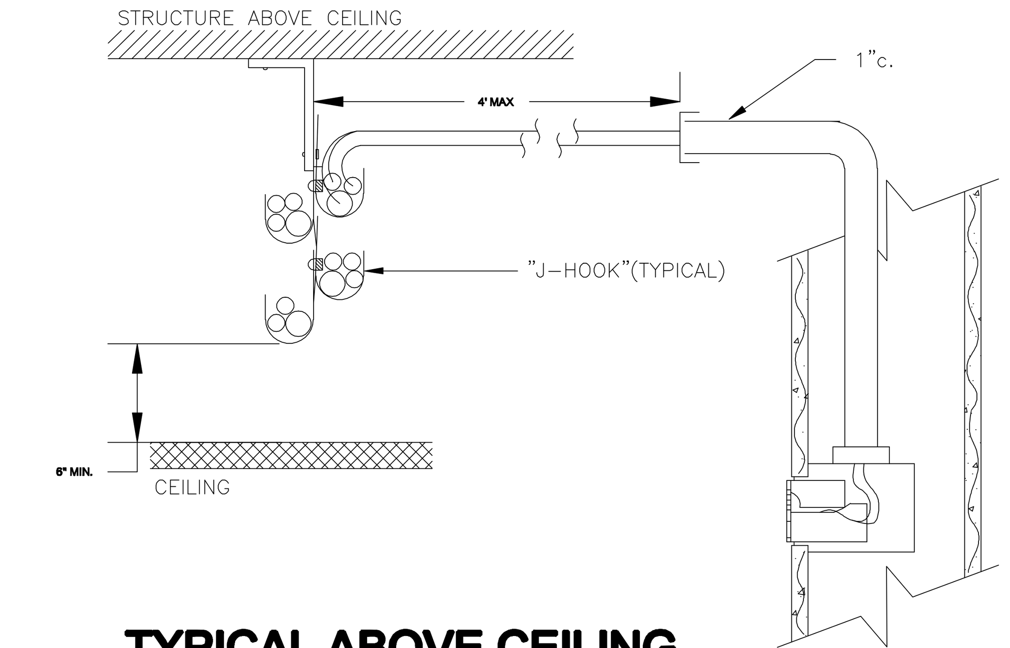

3 TYPICAL ABOVE CEILING CABLE ROUTING
SCALE: NOT TO SCALE

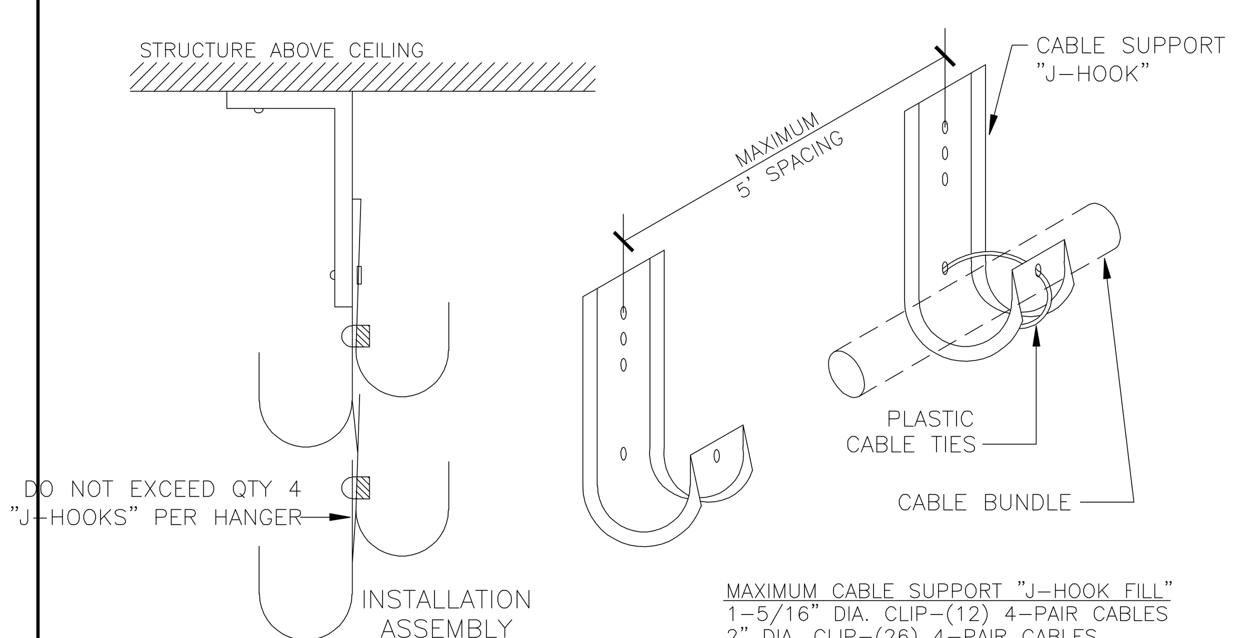

4 J-HOOK OPEN TOP CABLE SUPPORTS
SCALE: NOT TO SCALE

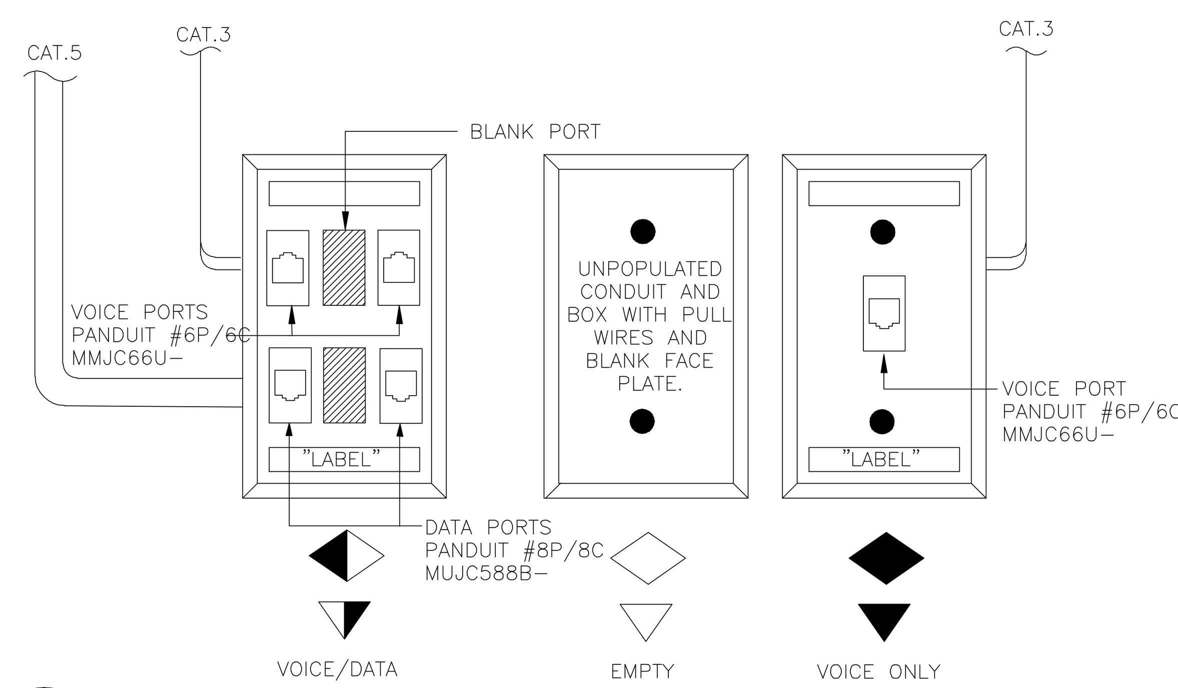

5 MODULAR OUTLET CONFIGURATION
SCALE: NOT TO SCALE

Texas Department of Transportation
125 E. 11th Street
Austin, Texas 78701-2483
(512) 416-3040
Copyright © 2005 Texas Department of Transportation

THIS DOCUMENT IS RELEASED FOR THE PURPOSE OF INFORMATION ONLY
NOT FOR REGULATORY APPROVAL, PERMITTING, OR CONSTRUCTION.

WACO AREA ENGINEER AND MAINTENANCE FACILITY
WACO, MCLENNAN COUNTY
WACO DISTRICT

Revisions

Drawn by: CON
Project No. CBC4704-00672
Date 05.21.2007
Sheet No.
E5.2
of 15 E sheets

VOICE/DATA DETAILS

NOTE: THIS DRAWING WAS CREATED FOR PRODUCTION ON 22" x 34" SHEET SIZE. DO NOT SCALE PRINTS.

CADFILE: T:\MNTFM\D02FTW\CBC4704-00-537\02-77-4704005371\Acad\prototypical pdfs\waco\Acad\MEP\ELEC\E5_2.dwg Plotted: Fri, Aug. 07, 2009 @ 1:20 PM By: MBAZAN

WACO AREA ENGINEER & MAINTENANCE FACILITY
WACO DISTRICT

PROJECT NO: CBC-4704-00-672
DETAIL NUMBER: 09-77-470400672

SPECIFICATIONS INDEX

DIVISION 1 - GENERAL REQUIREMENTS

01001	Summary of Work
01002	Definitions and Standards
01003	Special Conditions
01004	Specification Outline
01200	Price and Payment Procedures
01300	Administrative Requirements
01320	Allowances
01321	Construction Progress Documentation
01330	Submittal Procedures
01400	Quality Control Requirements
01410	Testing Laboratory Services
01500	Temporary Facilities and Controls
01600	Product Requirements
01630	Substitutions and Product Options
01700	Execution Requirements
01770	Closeout Procedures

DIVISION 2 - SITE WORK

02100	Site Clearing
02200	Earthwork
02210	Geotechnical Data
02324	Trenching
02362	Termite Control
02446	Boring and Jacking
02512	Site Water Distribution
02516	Disinfection of Water Distribution
02538	Sanitary Sewer System
02741	Hot Mix Asphalt Paving / Striping
02751	Cement Concrete
02764	Pavement Joint Sealants
02780	Detectable Warning Pavers
02821	Chain Link Fences and Gates

DIVISION 3 - CONCRETE

03100	Concrete Forms and Accessories
03200	Concrete Reinforcement
03300	Cast-in-Place Concrete
03350	Concrete Finishing

DIVISION 4 - MASONRY

04065 Masonry Mortar and Grout
04210 Stone Masonry
04600 Cast Stone
04820 Reinforced Unit Masonry Assemblies

DIVISION 5 – METALS

05312 Steel Roof Deck
05400 Cold-Formed Metal Framing
05500 Metal Fabrications

DIVISION 6 - WOOD AND PLASTIC

06114 Wood Blocking and Curbing
06200 Finish Carpentry
06410 Custom Cabinets

DIVISION 7 - THERMAL AND MOISTURE PROTECTION

07190 Water Repellents
07200 Board Insulation
07213 Batt Insulation
07260 Vapor Retardant Barrier
07413 Sheet Metal Roof / Wall Panels
07614 Metal Roof Curbs
07840 Firestopping
07900 Joint Sealers

DIVISION 8 - DOORS AND WINDOWS

08110 Standard Steel Doors
08115 Standard Steel Frames
08212 Flush Wood Doors
08310 Access Doors and Panels
08333 Overhead Coiling Doors
08410 Aluminium Storefronts
08520 Aluminum Windows
08710 Door Hardware
08800 Glazing

DIVISION 9 - FINISHES

09111 Non-Load-Bearing Metal Framing System
09260 Gypsum Board Assemblies
09300 Tile
09510 Acoustical Ceilings
09546 Linear Metal Ceilings
09650 Resilient Flooring
09900 Painting and Coatings
09910 Painting Fueling System

DIVISION 10 - SPECIALTIES

10100 Visual Display Boards
10170 Plastic Toilet Compartments
10350 Flagpoles
10440 Interior Signage
10500 Lockers
10523 Fire Extinguishers and Cabinets
10800 Toilet Accessories

DIVISION 11 - EQUIPMENT

11132 Projection Screens
11140 Fuel Dispensing System

DIVISION 12 - FURNISHINGS

12493 Horizontal Louver Blinds

DIVISION 13 - SPECIAL CONSTRUCTION

13120 Pre-Engineered Buildings

DIVISION 14 - CONVEYING SYSTEMS

Not Used

DIVISION 15 – MECHANICAL

15050 Basic Mechanical Requirements
15060 Supports and Anchors
15090 Piping Insulation
15097 Ductwork Insulation
15210 Reciprocating Air Compressors
15400 Plumbing, Piping, and Associated Materials
15490 Close Loop Water Recirculation System
15540 Fuel Fired Heaters
15761 Ductless Air Conditioning Systems
15767 Heat Pump Air Conditioning Systems
15810 Ductwork
15820 Ductwork Accessories
15830 Fans
15850 Air Outlets and Inlets
15950 Testing, Adjusting, and Balancing

DIVISION 16 – ELECTRICAL

16010 Basic Electrical Requirements
16060 Grounding and Bonding
16070 Electrical Hangers and Supports
16075 Electrical Identification
16123 Building Wire and Cable
16130 Raceway and Boxes

16140 Wiring Devices
16150 Wiring Connections
16210 Electrical Utility Service
16235 Engine Generators
16411 Enclosed Switches
16442 Panelboards
16491 Fuses
16510 Interior Luminaries
16520 Exterior Luminaries
16530 Emergency Lighting
16710 Telecommunications Cabling
16722 Gas Monitoring System

WACO AREA ENGINEER & MAINTENANCE FACILITY
WACO DISTRICT

PROJECT NO: CBC-4704-00-672
DETAIL NUMBER: 09-77-470400672

LIST OF DRAWINGS

GENERAL

G1.0 COVER SHEET / INDEX
G1.1 ABBREVIATIONS AND SYMBOLS
G1.2 TEXAS ACCESSIBILITY STANDARDS

CIVIL:

C1.0 CIVIL NOTES
C2.0 HORIZONTAL CONTROL PLAN
C3.0 SITE GRADING & DRAINAGE PLAN
C4.0 SITE PAVING PLAN
C5.0 WATER & WASTEWATER PLAN
C6,0 WASTEWATER PROFILE
C7.0 ON SITE SEWAGE FAC. PLAN
C8.0 ON SITE SEWAGE FAC. DETAILS
C9.0 MISC. DETAILS
C10.0 STORM WATER POLL. PREV. PLAN

STRUCTURAL:

S1.1 STRUCTURAL NOTES
S2.1 FOUNDATION PLAN – OFFICE
S2.2 FOUNDATION PLAN – LAB/SHOP
S2.3 FOUNDATION PLAN – VEHICLE STORAGE
S3.1 FOUNDATION DETAILS
S3.2 FOUNDATION DETAILS
S3.3 FOUNDATION DETAILS
S3.4 FOUNDATION DETAILS
S4.1 FRAMING PLAN – OFFICE
S4.2 FRAMING PLAN – LAB/SHOP
S4.3 FRAMING PLAN – VEHICLE STORAGE
S4.4 FRAMING SECTIONS

ARCHITECTURAL:

A1.1 SITE PLAN
A1.2 SITE DETAILS
A1.3 GATE & FENCE DETAILS
A2.0 CODE COMPLIANCE SHEET
A2.1 FLOOR PLAN – OFFICE
A2.2 FLOOR PLAN – LAB / SHOP
A2.3 FLOOR PLAN – VEHICLE STORAGE
A2.4 FLOOR PLAN – WASH BAY & VEHICLE STORAGE
A3.1 ROOF PLAN – OFFICE
A3.2 ROOF PLAN – LAB / SHOP
A3.3 ROOF PLAN – WASH BAY & VEHICLE STORAGE
A3.4 ROOF ROOF DETAILS
A3.5 ROOF DETAILS
A4.1 REFLECTED CEILING PLAN – OFFICE
A4.2 REFLECTED CEILING PLAN – LAB/SHOP
A5.1 EXTERIOR ELEVATIONS – OFFICE
A5.2 EXTERIOR ELEVATIONS – LAB/SHOP
A5.3 EXTERIOR ELEVATIONS – VEHICLE STORAGE
A5.4 EXTERIOR ELEVATIONS - WASH BAY
A6.1 TOILETS – PLANS & ELEVATIONS
A6.2 MILLWORK ELEVATIONS
A7.1 BUILDING SECTIONS - OFFICE
A7.2 BUILDING SECTIONS – LAB/SHOP
A8.1 PARTITION TYPES
A8.2 WALL SECTIONS
A8.3 WALL SECTIONS
A8.4 WALL SECTIONS
A8.5 WALL SECTIONS
A8.6 WALL SECTIONS/DETAILS
A8.7 WALL SECTIONS/DETAILS
A9.1 FINISH SCHEDULE & DETAILS
A9.2 DOOR SCHEDULE – DOOR & WINDOW TYPES
A9.3 DOOR DETAILS
A9.4 WINDOW AND DOOR DETAILS
A9.5 PLAN DETAILS
A9.6 DETAIL
A9.7 DOOR DETAILS

MECHANICAL:

M2.1 MECHANICAL PLAN – OFFICE BUILDING
M2.2 MECHANICAL PLAN – LAB/SHOP BUILDING
M2.3 MECHANICAL PLAN – VEHICLE STORAGE
M4.1 MECHANICAL SCHEDULES - 1
M4.2 MECHANICAL SCHEDULES - 2
M5.1 MECHANICAL DETAILS – 1
M5.2 MECHANICAL DETAILS - 2
M5.3 MECHANICAL DETAILS - 3

PLUMBING:

P2.1 PLUMBING PLAN – OFFICE BUILDING
P2.2 PLUMBING PLAN – LAB/SHOP BUILDING
P2.3 PLUMBING PLAN – WASH BAY
P3.1 PLUMBING RISER DIAGRAMS – SANITARY SEWER
P3.2 PLUMBING RISER DIAGRAMS – DOMESTIC WATER
P4.1 PLUMBING SCHEDULES
P5.1 PLUMBING DETAILS - 1
P5.2 PLUMBING DETAILS – 2
P5.3 PLUMBING DETAILS - 3

ELECTRICAL:

PE1.1 PLUMBING & ELECTRICAL SITE PLAN
E2.1 LIGHTING PLAN - OFFICE BUILDING
E2.2 LIGHTING PLAN - LAB/SHOP BUILDING
E2.3 LIGHTING PLAN - VEHICLE STORAGE BUILDING
E2.4 POWER PLAN - OFFICE BUILDING
E2.5 POWER PLAN - LAB/SHOP BUILDING
E2.6 POWER PLAN - VEHICLE STORAGE BUILDING
E2.7 ELECTRICAL PLAN - WASH BAY
E2.8 GAS DETECTION PLAN - LAB/SHOP BUILDING
E2.20 FUEL STATION PLAN - SCHEDULE & ELEVATIONS
E2.21 FUEL STATION PLAN - POWER AND SPECIAL SYSTEMS
E3.1 ELECTRICAL RISER DIAGRAM, LEGEND & LIGHTING SCHEDULE
E4.1 ELECTRICAL PANEL BOARD SCHEDULES - 1
E4.2 ELECTRICAL PANEL BOARD SCHEDULES - 2
E5.1 ELECTRICAL DETAILS
E5.2 VOICE / DATA DETAILS

SECTION 01001

SUMMARY OF WORK

PART 1 - GENERAL

1.1 SECTION INCLUDES

A. Project Identification

B. Contract description

C. Work by the Texas Department of Transportation (Owner)

D. Owner supplied products

E. Contractor's use of site [and premises]

F. Owner occupancy

G. Specification Conventions

1.2 PROJECT IDENTIFICATION

TEXAS DEPARTMENT OF TRANSPORTATION
WACO DISTRICT 09, MCLENNAN COUNTY
Waco Area Engineer & Maintenance Facility
7703 Bagby Avenue
Waco, McLennanCounty, Belton, Texas

1.3 CONTRACT DESCRIPTION

A. Work of the Project includes construction of four buildings and all related site work. Major components of site work consist of site roadways, parking lots, asphalt paving, concrete driveways, concrete curb and gutter, security fencing and gates, concrete walks, and connection of building to utility systems.

Building 1: Office Building. OFFICE: Slab on grade foundation, with a pre-engineered metal building structure with roof purlins, roof insulation board and standing seam metal roof, metal studs and stone veneer exterior wall, forced air DX heating and cooling system.

Building 2: Shop / Laboratory. Connected to Building 1 with breezeway. Slab on grade foundation with pre-engineered metal building structure with roof purlins, standing seam metal roof and metal wall panels.

Building 3: Vehicle Storage. Free standing. Slab on grade foundation. Pre-engineered metal building structure with roof purlins, standing seam metal roof and metal wall panels.

Building 4: Wash Bay Building. Free standing enclosed truck wash facility, slab on grade foundation with pre-engineered metal building structure with roof purlins, standing seam metal roof, cmu walls, and metal wall panels.

The Work includes construction of a fuel station, slab on grade foundation with fuel tank and equipment.

In general, the Work includes site clearing, earthwork, paving, fencing, irrigation, landscaping, site amenities, concrete foundation, pre-engineered metal building structural frame and roofing, masonry veneer on metal studs, pre-finished metal siding, aluminum windows and storefront, drywall interior partitions, hollow metal doors, pre-finished wood doors, ceramic tile, vinyl composition flooring, carpet, paint, millwork, mechanical systems, plumbing systems, electrical systems, propane monitoring system, recycled water system and equipment installation as indicated in the Contract Documents

B. Perform Work of Contract under Lump Sum Total cost contract with Owner in accordance with Conditions of Contract.

1.4 WORK BY OWNER

A. Concurrent work by Owner or others: Owner reserves the right to conduct minor work with his own forces or separate contractors during the construction. Work will be coordinated with the contractor along the general demarcation line shown on the civil drawings.

1.5 OWNER SUPPLIED PRODUCTS

A. Owner will arrange for and deliver Shop Drawings, Product Data, and Samples to Contractor.

B. Owner will arrange and pay for delivery of Owner-furnished items according to Contractor's Construction Schedule.

C. After delivery, Owner will inspect delivered items for damage. Contractor shall be present for and assist in Owner's inspection.

D. If Owner-furnished items are damaged, defective, or missing, Owner will arrange for replacement.

E. Owner will arrange for Manufacturer's field services and for delivery of Manufacturer's warranties to Contractor.

F. Owner will furnish Contractor the earliest possible delivery date for Owner-furnished products. Using Owner-furnished earliest possible delivery dates, Contractor shall designate delivery dates of Owner-furnished items in Contractor's Construction Schedule.

G. Contractor shall review Shop Drawings, Product Data, and Samples and return them to Architect noting discrepancies or anticipated problems in use of product.

H. Contractor is responsible for receiving, unloading, and handling Owner-furnished items at Project site.

I. Contractor is responsible for protecting Owner-furnished items from damage during storage and handling, including damage from exposure to the elements.

J. If Owner-furnished items are damaged as a result of Contractor's operations, Contractor shall repair or replace them.

1.6 CONTRACTOR'S USE OF SITE [AND PREMISES]

A. Access to Site: Contractor will have unrestricted access to site. Contractor shall have full use of premises for construction operations, including use of Project site, during construction period. Contractor's use of premises is limited only by Owner's right to perform work or to retain other contractors on portions of Project.

B. Owner Adjacent Site: Contractor will have very limited access to Owners adjacent property, coordinate site access to Owners adjacent property.

C. Construction Operations: Limited to areas noted on the drawings as the DEMARCATION line.

D. Time Restrictions for Performing Work: Owner will inform Contractor of any Time Restrictions.

1.7 OWNER OCCUPANCY

A. The Owner will occupy the premises outside the limits of the construction site as denoted on the plans during the entire period of construction.

B. Cooperate with Owner to minimize conflict, and to facilitate Owner's operations.

1.8 SPECIFICATION CONVENTIONS

A. These specifications are written in imperative mood and streamlined form. This imperative language is directed to the Contractor, unless specifically noted otherwise. The words “shall be” are included by inference where a colon (:) is used within sentences or phrases. Except where specifically intended otherwise, the subject of all imperative statements is the Contractor. For example, 'Provide tile' means 'Contractor shall provide tile.'

1.9 CONTRACTOR

A. Permits and Fees: Apply for, obtain, and pay for permits, if applicable, fees, and utility company back charges required to perform the work. Submit copies to Owner.

B. Codes: Comply with applicable codes and regulations of authorities having jurisdiction. Submit copies of inspection reports, notices and similar communications to Owner. Primary code is the International Building Code, 2003.

C. Dimensions: Verify dimensions indicated on drawings with field dimensions before fabrication or ordering of materials. **Do not scale drawings.**

D. Existing Conditions: Notify Owner of existing conditions differing from those indicated on the drawings. Do not remove or alter structural components without prior written approval of the Architect.

E. Coordination:
1. Coordinate the work of all trades.
2. Prepare coordination drawings for areas above ceilings where close tolerances are required between building elements and mechanical and electrical work.
3. Verify location of utilities and existing conditions prior to beginning work.

F. Installation Requirements, General:
1. Inspect substrates and report unsatisfactory conditions in writing.
2. Do not proceed until unsatisfactory conditions have been corrected.
3. Take field measurements prior to fabrication where practical. Form to required shapes and sizes with true edges, lines and angles. Provide inserts and templates as needed for work of other trades.
4. Install materials in accordance with Manufacturer's instructions and approved submittals.
5. Install materials in proper relation with adjacent construction and with proper appearance.
6. Restore units damaged during installation. Replace units which cannot be restored at no additional expense to the Owner.
7. Refer to additional installation requirements and tolerances specified under individual specification sections.

G. Definitions:
1. Provide: Furnish and install, complete with all necessary accessories, ready for intended use. Pay for all related costs.
2. Reviewed: Review of items submitted. Not a limitation or release for compliance with the Contract Documents or regulatory requirements. Refer to limitations of 'Reviewed' in General and Supplementary Conditions.

H. Intent: Drawings and specifications are intended to provide the basis for proper completion of the work suitable for the intended use. Anything not expressly set forth but which is reasonable implied or necessary for proper performance of the project shall be included.

PART 2 - PRODUCTS (Not Used)

PART 3 - EXECUTION (Not Used)

END OF SECTION

SECTION 01002

DEFINITIONS AND STANDARDS

PART 1 - GENERAL

1.1 RELATED DOCUMENTS

A. Drawings and general provisions of Contract, including General and Supplementary Conditions and other Division 1 Specification Sections, apply to this Section.

1.2 SUMMARY: This section specifies administrative requirements for compliance with governing regulations, codes and standards.

A. Requirements include obtaining permits, licenses, inspections, releases and similar documentation, as well as payments, statements and similar requirements associated with regulations, codes and standards.

1.3 DEFINITIONS

A. General: Definitions contained in this Article are not necessarily complete, but are general to the extent that they are not defined more explicitly elsewhere in the Contract documents.

B. Indicated: Refers to graphic representations, notes or schedules on the Drawings, or other Paragraphs or Schedules in Specifications, and similar requirements in Contract Documents. Where terms such as "shown," "noted," "scheduled," and "specified" are used, it is to help locate the reference; not limitation on location is intended except as specifically noted.

C. Directed: Terms such as "directed," "requested," "authorized," "selected," "reviewed," "required," and "permitted" mean "directed by the Architect/Engineer," "requested by the Architect/Engineer," and similar phrases. However, no implied meaning shall be interpreted to extend the Architect/Engineer's responsibility into the Contractor's area of construction supervision.

D. Review: The term "reviewed" where used in conjunction with the Architect/Engineer's action on the Contractor's submittals, applications, and requests, is limited to the responsibilities and duties of the Architect/Engineer stated in General and Supplementary Conditions. Such review shall not release the Contractor from responsibility to fulfill Contract Document requirements, unless otherwise provided in the Contract Documents.

E. Regulation: The term "Regulations" includes laws, statutes, ordinances and lawful orders issued by authorities having jurisdiction, as well as rules, conventions and agreements within the construction industry that control performance of the Work, whether they are lawfully imposed by authorities having jurisdiction or not.

F. Furnish: The term "furnish" is used to mean "supply and deliver to the Project site, ready for unloading, unpacking, assembly, installation, and similar operations."

G. Install: The term "install" is used to describe operations at project site including the actual "unloading, unpacking, assembly, erection, placing, anchoring, applying, working to dimension, finishing, curing, protecting, cleaning and similar operations.

H. Provide: The term "provide" means "to furnish and install, complete and ready for use".

I. Installer: An "Installer" is an entity engaged by the Contractor, either as an employee, subcontractor or sub-subcontractor for performance of a particular construction activity, including installation, erection, application and similar operations. Installers are required to be experienced in the construction they are engaged to perform.
   1. The term "experienced," when used with the term "Installer" means having a minimum of 5 previous Projects similar in size and scope to this Project and familiar with the precautions required, and has complied with requirements of the authority having jurisdiction.

J. Project Site is the space available to the Contractor for performance of the Work, either exclusively or in conjunction with others performing other construction as part of the Project. The extent of the Project Site is shown on the Drawings, and may or may not be identical with the description of the land upon which the Project is to be built.

K. Testing Laboratories: A "testing laboratory" is an independent entity engaged to perform specific inspections or tests, either at the Project Site or elsewhere, and to report on, and, if required, to interpret results of those inspections or tests.

1.4 SPECIFICATION FORMAT AND CONTENT EXPLANATION: This Article is provided to help the user of these specifications understand the format, language, implied requirements, and similar conventions. None of the explanations shall be interpreted to modify the substance of Contract requirements.

A. Specification Format: These Specifications are organized into Divisions, Sections or Trade Headings based on the Construction Specifications Institute's 16 Division format and the MASTERFORMAT numbering system. This organization conforms generally to recognize construction industry practice.

B. Specification Content: This Specification has been produced employing conventions in the use of language and the intended meaning of certain terms, words, and phrases when used in particular situations or circumstances. These conventions are explained as follows:
   1. Language used in the Specifications and other Contract Documents is the abbreviated type. Implied words and meanings will be appropriately interpreted. Singular words will be interpreted as plural and plural words interpreted as singular where applicable and where the full context of the Contract Documents so indicates.
   2. Imperative Language is used generally in the Specifications. Requirements expressed imperatively are to be performed by the Contractor. At certain locations in the text, for clarity, subjective language is used to describe responsibilities that must be fulfilled indirectly by the Contractor or by others when so noted.

C. Assignment of Specialists: The Specifications requires that certain specific Construction activities shall be performed by specialists who are recognized experts in the operations to be performed. The specialists must be engaged for those activities, and the assignments are requirements over which the Contractor has no choice or option. Nevertheless, the ultimate responsibility for fulfilling Contract requirements remains with the Contractor.

1. This requirement shall not be interpreted to conflict with enforcement of building codes and similar regulations governing the Work. It is also not intended to interfere with local trade union jurisdictional settlements and similar conventions.
2. Trades: Use of titles such as "carpentry" is not intended to imply that certain construction activities must be performed by accredited or unionized individuals of a corresponding generic name, such as "carpenter". It also does not imply that requirements specified apply exclusively to trades persons of the corresponding generic name.

1.5 DRAWING SYMBOLS

A. Graphic Symbols used on the Drawings are those recognized in the construction industry for purposes indicated. Where not otherwise noted, symbols are defined by "Architectural Graphic Standards," published by John Wiley & Sons, Inc., seventh edition.

B. Mechanical/Electrical Drawings: Graphic symbols used on mechanical and electrical Drawings are generally aligned with symbols recommended by ASHRAE. Where appropriate, they are supplemented by more specific symbols recommended by technical associations including, ASME, ASPE, IEEE and similar organizations. Refer instances of uncertainty to the Architect/Engineer for clarification before proceeding.

1.6 INDUSTRY STANDARDS

A. Applicability of Standards: Except where Contract Documents include more stringent requirements, applicable construction industry standards have the same force and effect as if bound or copied directly into Contract Documents. Such standards are made a part of the Contract Documents by reference. Individual Sections indicate which codes and standards the Contractor must keep available at the Project Site for reference.

1. Referenced standards take precedence over standards that are not referenced but recognized in the construction industry as applicable.
2. Non-referenced standards are not directly applicable to the Work, except as a general requirement of whether the Work complies with construction industry standards.
3. Non-referenced standards: Except as otherwise limited by the Contract Documents, standards not referenced by recognized in the industry as applicable will be enforced for performance of the Work. The Architect/Engineer will decide whether a code or standard is applicable, or which of several are applicable.

B. Publication Dates: Where compliance with an industry standard is required, comply with standard in effect as of date of Contract Documents.

1. Updated Standards: At the request of the Architect/Engineer, Contractor or authority having jurisdiction, submit a Change Order proposal where an

applicable code or standard has been revised and reissued after the date of the Contract Documents and before performance of Work affected. The Architect/Engineer will decide whether to issue a Change Order to proceed with the updated standard.

C. Conflicting Requirements: Where compliance with two or more standards is specified, and they establish different or conflicting requirements for minimum quantities or quality levels, the most stringent requirement will be enforced, unless the Contract Documents indicate otherwise. Refer requirements that are different, but apparently equal, and uncertainties as to which quality level is more stringent to the Architect/Engineer for a decision before proceeding.

1. Minimum Quantities or Quality Levels: In every instance the quantity or quality level shown or specified shall be the minimum to be provided or performed. The actual installation may comply exactly, within specified tolerances, with the minimum quantity or quality specified, or it may exceed that minimum within reasonable limits. In complying with these requirements, indicated numeric values are minimum or maximum values, as noted, or appropriate for the context of the requirements. Refer instances of uncertainty to the Architect/Engineer for decision **before** proceeding.

D. Copies of standards: Each entity engaged in construction on the Project is required to be familiar with industry standards applicable to that entities' Construction activity. Copies of applicable standards are not bound with the Contract Documents.

1. Where copies of standards are needed for performance of a required construction activity, the Contractor shall obtain copies directly from the publication source.
2. Although copies of standards needed for enforcement of requirements may be part of required submittals, the Architect/Engineer reserves the right to require the Contractor to submit additional copies as necessary for enforcement of requirements.

E. Abbreviations and Names: Trade association names and titles of general standards are frequently abbreviated. Where acronyms or abbreviations are used in the Specifications or other Contract Documents, they mean the recognized name of the trade association, standards generating organization, authority having jurisdiction or other entity applicable to the context of the text provision. Refer to the "Encyclopedia of Associations," published by Gale Research Co., available in most libraries.

F. Abbreviations and Names: Trade association names and titles of general standards are frequently abbreviated. The following acronyms as referenced in Contract Documents are defined to mean the associated names. Names and addresses are subject to change, and are believed to be, but are not assured to be, accurate as of date of Contract Documents:

1.	AASHTO	American Association of State Highway and Transportation Officials 444 No. Capitol St., Suite 225, Washington, DC 20001	202-624-5800
2.	ACI	American Concrete Institute, P. O. Box 19150 Detroit, MI 48219	313-532-2600

3.	ACIL	American Council of Independent Laboratories 1725 K Street, NW Washington, DC 20006	202-887-5872
4.	ACPA	American Concrete Pipe Association 8320 Old Courthouse Road Vienna, VA 22180	703-821-1990
5.	AGA	American Gas Association 1515 Wilson Blvd. Arlington, VA 22209	703-841-8400
6.	AI	Asphalt Institute Asphalt Institute Building College Park, MD 20740	301-277-4258
7.	AIA	American Institute of Architects 1735 New York Ave., NW Washington, DC 20006	202-626-7300
8.	AIHA	American Industrial Hygiene Association 475 Wolf Ledges Parkway Akron, OH 44311	216-762-7294
9.	AISC	American Institute of Steel Construction 400 No. Michigan Ave., 8th Floor Chicago, IL 60611	312-670-2400
10.	AISI	American Iron and Steel Institute 1000 Sixteenth St., N.W. Washington, DC 20036	202-452-7100
11.	ALI	Associated Laboratories 641 So. Vermont Street Palatine, IL 60067	312-358-7400
12.	ANSI	American National Standards Institute 1430 Broadway New York, NY 10018	212-354-3300
13.	API	American Petroleum Institute 1220 L Street, N.W. Washington, DC 20005	202-682-8000
14.	ASC	Adhesive and Sealant Council 1500 Wilson Blvd., Suite 515 Arlington, VA 22209	703-841-1112
15.	ASME	American Society of Mechanical Engineers 345 East 47th St. New York, New York 10017	212-705-7722
16.	ASPE	American Society of Plumbing Engineers 3617 Thousand Oaks Blvd., Suite 210 Westlake, CA 91362	805-495-7120
17.	ASSE	American Society of Sanitary Engineering P. O. Box 40362	216-835-3040

		Bay Village, OH 44140	
18.	ASTM	ASTM 1916 Race St. Philadelphia, PA 19103	215-599-5400
19.	AWS	American Welding Society P. O. Box 351040 550 Le Jeune Road, NW Miami, FL 33135	305-443-9353
20.	AWWA	American Water Works Association 6666 W. Quincy Ave. Denver, CO 80235	303-794-7711
21.	CRSI	Concrete Reinforcing Steel Institute 933 Plum Grove Road Schaumburg, IL 60195	312-490-1700
22.	IEEE	Institute of Electrical and Electronic Engineers 345 E. 47th St. New York, NY 10017	607-723-3531
23.	ISA	Instrument Society of America P. O. Box 12277 67 Alexander Drive Research Triangle Park, NC 27709	919-549-8411
24.	LPI	Lightning Protection Institute P. O. Box 458 Harvard, IL 60033	815-943-7211
25.	MCAA	Mechanical Contractor's Association of America 5410 Grosvenor Lane, Suite 120 Bethesda, MD 20814	301-897-0770
26.	MSS	Manufacturers Standardization Society of the Valve and Fittings Industry 127 Park St., NE Vienna, VA 22180	703-281-6613
27.	NAPA	National Asphalt Pavement Association Calvert Building, Suite 620 6811 Kenilworthy Ave. Riverdale, MD 20737	301-779-4880
28.	NEC	National Electric Code (by NFPA)	
29.	NECA	National Electrical Contractors Association 7315 Wisconsin Ave. Bethesda, MD 20814	301-657-3110
30.	NEMA	National Electrical Manufacturers Association 2101 L Street, NW, Suite 300 Washington, DC 20037	202-457-8400
31.	NFPA	National Fire Protection Association Batterymarch Park Quincy, MA 02269	617-770-3000

32.	NPCA	National Paint and Coatings Association 1500 Rhode Island Ave., NW Washington, DC 20005	202-462-6272
33.	PDI	Plumbing and Draining Institute (c/o Austin O. Roche, Jr.) 5342 Boulevard Pl. Indianapolis, IN 46208	317-251-5298
34.	PEI	Petroleum Equipment Institute 6514 East 69th St. Tulsa, OK 74133-1719	918-494-9696
35.	SSPC	Steel Structures Painting Council 4400 Fifth Avenue Pittsburgh, PA 15213	412-578-3327
36.	UL	Underwriters Laboratories 333 Pfingsten Rd. Northbrook, IL 60062	312-272-8800
37.	WRI	Wire Reinforcement Institute 8361 A Greensboro Drive McLean, VA 22102	703-790-9790
38.	WSC	Water Systems Council 600 S. Federal St., Suite 400 Chicago, IL 60605	312-922-6222
39.	WWPA	Woven Wire Products Association 2515 No. Nordica Ave. Chicago, IL 6063	312-637-1359

G. Federal Government Agencies: Names and titles of federal government standard or Specification producing agencies are frequently abbreviated. The following acronyms or abbreviations referenced in the Contract Documents indicate names of standard or Specification producing agencies of the federal government. Names and addresses are subject to change, but are believed to be, but are not assured to be, accurate and up-to-date as of the date of the Contract Documents.

1.	CE	Corps of Engineers (US Dept. of the Army) Chief of Engineers - Referral Washington, DC 20314	202-693-6456
2.	CFR	Code of Federal Regulations Available from the Government Printing Office North Capitol Street Between G and H Streets, NW Washington, DC 20402 (Material is usually first published in the Federal Register)	202-783-3238
3.	CPSC	Consumer Product Safety Commission 1111 Eighteenth St., NW Washington, DC 20207	202-634-7700
4.	CS	Commercial Standard	202-377-2000

		US Dept. of Commerce Government Printing Office Washington, DC 20402	
5.	DOC	Department of Commerce 14th St and Constitution Ave., NW Washington, DC 20230	202-377-2000
6.	DOT	Department of Transportation 400 Seventh St. SW Washington, DC 20590	202-426-4000
7.	EPA	Environmental Protection Agency 401 M St., SW Washington, DC 20460	202-829-3535
8.	FS	Federal Specification (General Services Administration) Specifications Unit (WFSIS) 7th and D St., SW Washington, DC 20406	202-472-2205 202-472-2140
9.	GSA	General Services Administration F Street and 18th St., NW Washington, DC 20405	202-655-400
10.	MIL	Military Standardization Documents (US Department of Defense) Naval Publications and Forms Center 5801 Tabor Ave. Philadelphia, PA 19120	
11.	NBS	National Bureau of Standards (US Dept. of Commerce) Gaithersburg, MD 20234	301-921-1000
12.	OSHA	Occupational Safety and Health Administration (US Dept. of Labor) Government Printing Office Washington, DC 20402	202-783-3238
13.	PS	Product Standard of NBS (US Dept. of Commerce) Government Printing Office Washington, DC 20402	202-783-3238

1.7 GOVERNING REGULATIONS/AUTHORITIES: The Architect/Engineer has contacted authorities having jurisdiction where necessary to obtain information necessary for the preparation of Contract Documents; that information may or may not be of significance to the Contractor. Contact authorities having jurisdiction directly for information and decisions having a bearing on the Work.

A. Copies of Correspondence: During preparation of the Contract Documents, the Architect/Engineer has maintained a file containing correspondence with authorities having jurisdiction. This file is available at the Architect/Engineer's office for reference. If requested, the Architect/Engineer will provide copies of correspondence at cost of reproduction.

B. Copies of Regulations: Obtain copies of the following regulations and retain at the Project Site, available for reference by parties who have a reasonable need for such reference.

C. Trade Union Jurisdictions: The Contractor shall maintain, and require subcontractors to maintain complete current information on jurisdictional matters, regulations and pending actions, as applicable to construction activities. The manner in which Contract Documents have been organized and subdivided is not intended to indicate of trade union or jurisdictional agreements.
   1. Discuss new developments at Project meetings at the earliest feasible dates. Record relevant information and actions agreed upon.
   2. Assign and subcontract construction activities, and employ tradesmen and laborers, in a manner that will not unduly risk jurisdictional disputes that could result in conflicts, delays, claims and losses.

1.8 SUBMITTALS

A. Permits, Licenses, and Certificates: For the Owner's records, submit copies of permits, licenses, certifications, inspection reports, releases, jurisdictional settlements, notices, receipts for fee payments, judgments, and similar documents, correspondence and records established in conjunction with compliance with standards and regulations bearing upon performance of the Work.

PART 2 - PRODUCTS (Not Used)

PART 3 - EXECUTION (Not Used)

END OF SECTION

SECTION 01003

SPECIAL CONDITIONS

PART 1 - GENERAL

1.1 SCOPE AND RELATED DOCUMENTS

A. These Special Conditions are applicable to the entirety of the work and shall be subject to the requirements of the Uniform General Conditions of the Contract, as well as the Supplementary General Conditions and other Specification Sections. This Section shall in no way define or limit the responsibilities for the work or any portion thereof to any one contracting or subcontracting entity.

B. This Section contains the following requirements:
1. General Contract Requirements
2. Time of Completion
3. Site Visitation prior to Bid
4. Wage Rates
5. Fees, Permits, Notices
6. Existing site vegetation protection plans
7. Protection of Property, Utilities and Personnel
8. Storage of Materials
9. Security
10. Cutting, Patching and Installation of Sleeves
11. Precedence of Contract Documents and Necessary Work
12. Contractor’s Representatives and Equipment
13. Asbestos or Lead Hazards
14. Construction Layout
15. Environmental Conditions
16. Warranty

C. Refer to Section 01001 Summary of Work for these project related topics:
1. Project/Work Identification
2. General Descriptions of the Scope of Work

D. Refer to Section 01500 Temporary Facilities and Controls:
1. Temporary Field Office and Storage Area
2. Temporary Facilities and Utilities

1.2 THE CONTRACT AND CONTRACTOR

A. The materials to be furnished and the labor to be performed in conjunction with the construction and completion of this project are to be performed under a SINGLE UNIT BID PRICE of the Contract.

B. The Contractor's work includes the furnishing of all materials, labor, permits, machinery, tools, and supplies and to construct the project in accordance with the Contract Documents.

1.3 TIME OF COMPLETION

A. The Contractor agrees to commence work on or before the date to be specified in a written "Notice to Proceed" to be issued by the Owner and to complete construction of all improvements, as required by the Contract Documents.

B. Contractor further agrees that should he fail to complete the work within the time limits specified herein or as subsequently adjusted as provided in the General Conditions of Agreement, he shall pay the liquidated damages for each consecutive calendar day thereafter as provided in Article VI. Supplementary General Conditions.

1.4 SITE VISITATION AND INSPECTION

A. Contractor shall visit the site prior to submitting his Bid to acquaint himself with all work to be performed under this contract.

B. The Contractor shall verify all existing items indicated on plans and/or specified, and familiarize himself with the existing work conditions, hazards, grades, existing utility services and conditions which affect his work. The submission of bids shall be deemed evidence of such visits. All proposals shall take these existing conditions into consideration, and the lack of specific information on the Drawings shall not relieve the Contractor of any responsibility.

1.5 WAGE RATES

A. Refer to wage rates furnished and incorporated into these Specifications. Wage rates shown within these schedules shall be maintained as a requirement for the duration of the Contract.

1.6 FEES, PERMITS AND NOTICES

A. Unless otherwise provided in the Contract Documents, the Contractor shall secure and pay for all permits and governmental fees, licenses and inspections necessary for the proper execution of the Work.

B. No local building permits will be required for this project for work on State property.

C. Removal of Temporary Fences: Prior to request for final payment, Contractor shall remove all temporary buildings, fencing, etc., and restore construction yard area and storage area site and any related access drives to their original condition.

D. Existing Vegetation Protection: Contractor shall coordinate protection of existing site vegetation.

1.7 PROTECTION OF PROPERTY, UTILITIES AND PERSONNEL

A. General:

1. The Contractor shall provide all equipment and labor necessary to protect all workers, building personnel and the general public from hazards associated with the contract. The Owner and the Architect shall not be held responsible for failure of the Contractor to perform the job in a safe manner.
2. The Contractor shall be responsible for initiating, maintaining, and supervising safety precautions and programs associated with the work. It shall be the duty and responsibility of the Contractor to comply with all pertinent sections of the Occupational Safety and Health Act of 1975, and all amendments thereto. Provide appropriate safety measures with regard to open shaft barricades, staging, scaffolding and similar operations this project may require.
3. Trench Safety: Contractor shall comply with Trench Safety requirements contained in the Uniform General Conditions and Supplemental General Conditions. The Contractor shall ensure that all vertical embankments are graded to the minimum recommended angle of repose for the soils encountered for that specified backfill is placed and compacted in such areas to eliminate the possibility of soil collapse.
4. Remove all fences, temporary structures, barricades, etc. Replace all vegetation damaged by construction operations, including grass, shrubs, trees, to the satisfaction of the Owner. Contractor shall coordinate protection of existing trees and vegetation.

B. Protection of Utilities:

1. The Contractor shall be solely responsible for the location and protection of any and all utility lines in the work area. The Contractor shall exercise due care to locate and to mark, uncover or otherwise protect all such lines in the construction zone and any of the Contractor's work or storage areas. Upon request, the Owner shall provide such information he has about the location and grade of water, sewer, gas and telephone and electric lines and other utilities in the work area, but such information shall not relieve the Contractor's obligation hereunder which shall be primary and non delegable.
2. The Contractor shall indemnify or reimburse such expenses or costs that may result from the unauthorized or accidental damage to all existing utility lines in the work area.
3. Unknown Utility Lines: In case utility lines are found which are not shown on the contract drawings, and if the lines need to be cut or removed, the Contractor shall be responsible for determining whether or not the lines are "active" or "abandoned".
4. Contractor shall notify “One-Call” systems for public utility information within the public R.O.W. and immediately adjacent to project property lines.

C. Safety: The Contractor shall take all reasonable precautions for the safety of, and shall provide all reasonable protection to prevent damage, injury, or loss to the following:

1. All employees on the work, and the general public, who may be affected by work on this project.
2. The Contractor shall comply with all applicable laws, ordinances, rules, regulations and lawful orders of any public authority having jurisdiction for the safety of persons or property or to protect them from damage, injury or loss. He shall erect and maintain, as required by existing conditions and progress of the work, all reasonable safeguards for safety and protection, including posting danger signs and other warnings against hazards, erecting protective fencing, overhead protection, barricades or similar pedestrian safety measures, promulgating safety regulations and notifying owners and users of utilities. All damage or loss claimed to any property referred to in this article caused in whole or in part by the Contractor, or Subcontractor, or anyone directly or indirectly employed by any of them, or by anyone for whose acts any of them may be liable, shall be the sole responsibility of the Contractor and shall be remedied by the Contractor.
3. All machinery and equipment and other physical hazards shall be guarded in accordance with the "Manual of Accident Prevention in Construction" of the Associated General Contractors of America except where incompatible with Federal, State or Municipal laws or regulations. The Contractor shall provide such machinery guards, safe walkways, ladders, bridges, gangplanks and other safety devices. The safety precautions actually taken and their adequacy shall be the sole responsibility of the Contractor, acting at his discretion as an independent Contractor.
4. Contractor shall comply with Trench Safety requirements contained in the Uniform General Conditions.
5. The Contractor shall remove all temporary barricades and protection devices upon completion of the work.

D. Protection of Work:

1. Protect all the work and all materials and equipment to be incorporated therein, whether in storage on or off the site, under the care, custody or control of the Contractor or any of his Subcontractors or Sub-Subcontractors.
2. Each Contractor shall properly and effectively protect all materials and equipment furnished by him during and after their installation. Building materials, Contractor's equipment, etc., may be stored on the premises, but the placing of same shall be within a secure area. Each Subcontractor shall protect and be responsible for any damage to his work or material, from the date of the agreement until the final payment is made, and shall make good without cost to the Owner, any damage to his work or material, from the date of the agreement until the final payment is made, and shall make good without cost to the Owner, any damage or loss that may occur during this period. The Contractor shall handle all material as directed, such that materials may be inspected by

the Architect or Owner's Representative. All cement, lime and other material affected by weather shall be covered and protected to keep them free from damage while they are being transported to the site and when they are stored on the site.

3. During the execution of the Work, open ends of all piping and conduit and all openings in equipment shall be closed before leaving the Work at any time, so as to prevent the entrance of all foreign matter. No trash is to be allowed to accumulate.
4. All heating, ventilating, plumbing and electrical equipment shall be protected during the execution of the Work.
5. All plumbing fixtures shall be protected and shall be boarded over so that they cannot be used by workmen or others. All drains shall be covered until placed in service to prevent the entrance of foreign matter.

1.8 FURNISHING AND STORAGE OF MATERIALS

A. Except as otherwise specified, the Contractor shall furnish at his own cost and risk, all tools, apparatus, hoists, derricks, and Subcontractors shall arrange with the General Contractor for the use of same. Temporary equipment shall be installed in such a manner that finish work will not be damaged by smoke, falling mortar, concrete or other causes.

B. All temporary shoring required for the installation of work shall be included in this Contract and the General Contractor must assume all responsibility for this work and make good any damage caused by improper supports or failure of shoring in any respect.

C. Storage of materials to be used in the contract is the responsibility of the Contractor. The Owner may provide an area to store materials. The security of the storage area is the responsibility of the Contractor. Contractors are encouraged to limit storage of materials to a minimum. Material storage is not allowed for pesticides and other hazardous materials that are the property of the Contractor.

1.9 SECURITY

A. The Contractor shall be totally responsible for providing security for his materials, tools and equipment, and for any work in progress. If Contractor's personnel must leave an uncompleted and unsecured work area (overnight, lunch, etc.) unattended, then they must remove all tools, equipment, materials, and thoroughly close up or secure uncompleted work.

B. Site Security: Contractor shall make arrangements for and pay the cost of providing security of exterior premises if vandalism becomes a problem.

1.10 CUTTING, PATCHING, AND INSTALLATION OF SLEEVES

A. Each Contractor and Subcontractor requiring cutting and patching in the execution of his work shall leave all chases, holes, or openings straight, true

and of proper size as may be necessary for the proper installation of his own or other Contractor's or Subcontractor's work, consulting with the superintendent and Contractors or Subcontractors concerned parties regarding locations and size.

B. All work shall be done with proper tools and by careful workmen of the particular trade to which such work belongs, and shall be done without extra charge to the Owner. Each Contractor or Subcontractor will be required to build into his own work, as directed, any and all items furnished by others. Cutting and repairing of new work in place, made necessary for negligence of another Contractor or Subcontractor or anyone employed by him, shall be paid for by the party who is at fault but each Contractor or Subcontractor shall cooperate with all other contractors or subcontractors so that all necessary preparations are made in each branch of the work, as required for all other branches, so far as possible.

C. The work of each Specifications Section includes all cutting, patching and digging for work in that trade section, unless otherwise specified, as required for proper accommodations of work of other trades. Execute such work with competent workmen skilled in trade required for restoration. Each Subcontractor shall arrange and pay for cutting and patching required for installation of his work.

D. Each Contractor shall provide sleeves for service lines covered in his Contract.

1.11 PRECEDENCE OF CONTRACT DOCUMENTS AND NECESSARY WORK

A. The drawings accompanying these specifications attempt to show all work required to complete the project in accordance with the intent and purposes of these specifications. Contractor shall verify all conditions at the building and at the site that affect his work related to the project. The Contractor shall notify the Architect of any discrepancies prior to initiating the work.

B. Figured dimensions are in all cases to be adhered to though they may differ from scale measurements. In the absence of figured dimensions or in the case of doubt as to proper measurements, or in the case of any discrepancies between dimensions and drawings, the Architect is to be consulted. All dimensions and conditions shall be verified at the site by the Contractor, who is solely responsible for resolution of dimensional discrepancies without additional cost to the contract.

C. Detailed drawings take precedence over those of smaller scale. Specifications take precedence over drawings.

D. Work specified and not shown, or drawn and not specified, is to be executed as fully as if described in both ways; any work or material which is not directly or indirectly noted in the specifications and drawings, but is necessary for the proper carrying out of the obvious intention, is to be understood as implied and to be provided for by the Contractor in his Proposal as fully as if

specifically described or delineated. Any Discrepancy between drawings, or between drawings and specifications, must be reported to the Architect for correction and clarification before the work is executed.

E. The Contractor shall ensure that all his employees and subcontractors are furnished a copy of and are fully familiar with both the plans and specifications. A subcontractor's failure to read and coordinate both plans and specifications for his trade shall not relieve the General Contractor of the overall responsibility to ensure compliance with the more stringent of two differing requirements in the contract documents.

1.12 CONTRACTOR'S REPRESENTATIVES & EQUIPMENT

A. Superintendent: The Contractor shall give his personal superintendence to the Work or have a competent Superintendent, a minimum of 21 years old, maintaining the ability to communicate in both English and Spanish, and satisfactory to the Architect/Engineer and to the Owner, on the Work at all times during progress, with authority to act for him. All communications given to the Superintendent will be deemed to have been given to the Contractor. An approved Superintendent will not be removed from the Work by the Contractor without the approval of the Architect/Engineer, unless that Superintendent leaves the employ of the Contractor.

B. The Superintendent shall be present at the project site at all times that any work of this contract is underway. If the Superintendent is to be absent from the project site, the Contractor shall provide written notification to the Architect of a qualified replacement Superintendent at least 48 hours in advance. The replacement Superintendent shall be subject to the approval of the Architect and Owner. The only exception to this shall be when the Contractor, an officer of the company with a majority share of ownership, shall be permitted to act in place of the Superintendent.

C. No work shall be performed and no subcontractors shall be permitted to work at any time when the Superintendent is not present. This requirement applies to completion and correction of cited Punch list items at project closeout, until the time of Final Acceptance.

D. The Superintendent may not perform labor on the project and shall dedicate his full energies to coordination and supervision of the work. The Superintendent shall be equipped with a cellular telephone device at all times.

E. Equipment: The General Contractor shall provide and maintain two (2) telephone lines; one (1) dedicated to facsimile machine; a digital camera; and computer equipment connected to an internet service provider, during the duration of the project. The computer shall provide the capability to relay digital images and e-mail messages to TxDOT offices in Austin.

F. Special Superintendence Requirements:

1. Contractor shall provide full time Superintendence for all after-hours and weekend work performed for this project.
2. Contractor shall make the Superintendent available during daytime hours for Owner, A/E testing, observations, inspections, progress meetings, job conferences and other typical construction activities.
3. Superintendence shall be required to be in attendance for receipt of all on-site deliveries required by this contract.

1.13 ASBESTOS HAZARDS

A. No materials incorporated into this project shall contain asbestos in any form. Refer to Section 01310.

B. The EPA, in its publication entitled "Managing Asbestos in Place" provides a list of materials that can contain asbestos. For informational purposes, that list of products is repeated below:

- Cement Pipes
- Cement Wallboard
- Cement Siding
- Asphalt Floor Tile
- Vinyl Floor Tile
- Vinyl Sheet Flooring
- Flooring Backing
- Construction Mastics (floor tile, carpet, ceiling tile) etc.)
- Acoustical Plaster
- Decorative Plaster
- Textured Paints / Coatings
- Ceiling Tiles and Lay-in Panels
- Spray-Applied Insulation
- Blown-in Insulation
- Fireproofing Materials
- Taping Compounds (thermal)
- Packing Materials (for wall/floor
- Elevator Brake Shoes
- HVAC Duct Insulation
- Boiler Insulation
- Breeching Insulation
- Ductwork Flexible Fabric Connections
- Cooling Towers
- Pipe Insulation (corrugated air-cell, block etc.)
- Heating and Electrical Ducts
- Electrical Panel Partitions
- Electrical Cloth
- Electrical Wiring Insulation
- Chalkboards
- Roofing Shingles
- Roofing Felt
- Base Flashing
- Thermal Paper Products
- Fire Doors

penetrations)

- High Temperature Gaskets
- Laboratory Hoods / Table Tops
- Laboratory Gloves
- Fire Blankets
- Fire Curtains
- Elevator Equipment Panels
- Caulking / Putties
- Adhesives
- Wallboard
- Joint Compounds
- Vinyl Wall Coverings
- Spackling Compounds

1.14 ENVIRONMENTAL CONDITIONS

A. Construction Site Procedures: Contractor shall abide by the following procedures as is applicable to the specific project conditions:

1. Equipment Cleaning: Equipment shall be cleaned in a manner that does not create any discharge of cleaning agents, paints, oil or other pollutant to a storm sewer or waterway. Soaps and detergents shall not be discharged to the ground or off-site. When rinsing painting equipment outside, contain rinse water in a bucket or other container. Water based or latex paint rinse water may be discharged to the sanitary sewer. Oil-based paint wastes, including solvents and thinners, should not be disposed of in the sanitary sewer. They must be collected and disposed of through the Contractor's disposal company. Cement handling equipment should be not be rinsed on site.
2. Waste Disposal: Any trash or debris must be contained on-site and disposed of in a recycling bin or waste receptacle to prevent wind or rain from carrying it off-site into a storm drain or waterway. Petroleum wastes, such as waste oil and used oil filters, should be containerized for recycling or disposal by the Contractor. Non-hazardous solid wastes, such as general construction debris can be recycled or disposed of in the trash container. Never dispose of liquid wastes of any kind in dumpsters.
3. Sediment: Proper erosion and sedimentation controls must be in place to prevent sediment or silt run-off. Sediment (including cement) should never be rinsed off at the site; instead it should be cleaned up in a manner that does not allow it to reach a storm drain or waterway. Equipment tires may be rinsed before leaving the site to avoid tracking sediment into the roadway or off the site.
4. Site De-watering, Tank and Pipe Testing Discharges from de-watering, hydrostatic tank testing or pipe pressure testing must be free from sediment, chemicals, and any other pollutants. Some discharges may require governmental permits, to be paid for by the Contractor.
5. Petroleum: Spills of hydraulic fluid, oil and other petroleum products shall always be immediately cleaned up to prevent discharge of these fluids with storm water run-off.

B. Spill Disposal

1. The Contractor shall comply with all applicable provisions of local, state, and federal laws regarding the discharge of wastes into sewers and waterways. Special caution shall be exercised to prevent the discharge of wastes which contain oil, mud, cement, lime, or other materials which would degrade the water quality of the receiving watercourse. The Contractor shall construct and maintain oil interceptors, settling basins, or other effective pollution countermeasures.
2. Contaminated Material Disposal: Proper disposal of waste materials depends partly on the type of contaminant. Hazardous wastes (such as flammable petroleum products and solvents, thinners) and materials contaminated with hazardous wastes, are considered regulated wastes, and should be containerized for transport and disposal by a permitted company. Disposal also depends on the amount of contaminant.

C. Contractor Requirements and Responsibilities

1. Contractors are responsible for cleaning up and properly disposing of all spilled pollutants that are brought to the site, including oil, paint, fuels, antifreeze, solvents, etc. Keep accurate records (such as receipts, copies of analytical results, etc.) indicating proper disposal of spilled materials. Furthermore, Contractor is responsible for ensuring that all discharges from the site are in compliance with all applicable regulations.
2. In general no substance should be dumped or leaked onto the ground or allowed to run-off of a construction site that might cause pollution. Be aware that you are responsible for pollutant contaminated run-off and proper disposal of all your waste materials generated as a result of your activities.

1.15 WARRANTY

A. All work performed (including equipment and materials furnished) under this specification shall be 100% warranted for a minimum period of one (1) year from the date of Final Acceptance thereof against defective materials, design, unauthorized substitution, and improper installation. Upon receipt of notice of failure of any portion of the guaranteed systems and/or facilities during the warranty period, the affected portion or facilities shall be replaced or reworked promptly by and at the expense of the Contractor. Further, the Contractor shall properly obtain, execute, and forward any and all Manufacturer's warranties on equipment, materials, etc., furnished under the contract.

B. Comply with all Sections requiring more extended warranties.

PART 2 – NOT USED

END OF SECTION

SECTION 01004

SPECIFICATION OUTLINE

PART 1 - GENERAL

1.1 SUMMARY

A. The purpose of this section is to describe the organization and format to which the Specification has been prepared. This section is intended as an aid to the comprehension of the specification.

1.2 SPECIFICATION FORMAT

A. The Specification has been prepared in accordance with Construction Specifications Institute (CSI) Format.

B. The CSI format is subdivided into 16 major divisions. Divisions form the framework of this Specification and contain the technical requirements for the category of work within each division. Divisions that are not applicable to this specification are not used.

C. Sections within each division describe the specific requirements for different units of work based on trade or type of work. Sections within divisions are arranged in numerical order; however, section numbers may be assigned differently in separate divisions. Page numbering is subordinate to section numbering.

D. Sections are sub-divided into three distinct groupings of related information as follows:
1. Part 1 - GENERAL: Defines the administrative and procedural requirements unique to the section.
2. Part 2 - PRODUCTS: Details the quality and features of items required for the project.
3. Part 3 - EXECUTION: Details the incorporation of the products into the project.

Most sections contain all three sub-divisions; however, they are included only where needed. Paragraph designations are subordinate to sub-divisions.

E. Many sections do not stand alone and are related to other portions of the Subcontract documents. Some sections are specific extensions of, or are governed by the general requirements of Division 1. Requirements of the Subcontract Documents shall apply as a whole, regardless of any overlapping of various portions of the specification.

F. This specification has been written in the imperative mood and, in some cases, in a streamlined form. The imperative language is directed to the Contractor, unless specifically noted otherwise.

1.3 CLARIFICATIONS

A. Most sections begin with a paragraph in Part 1 entitled "Summary" or "Scope of Work". These paragraphs provide a brief description of the work specified in that Section. These descriptions are not intended to be all-inclusive, but provide a brief clarification of the particular subject matter in the specification.

B. Some technical sections contain a paragraph entitled "Related Sections" or "Related Work Specified Elsewhere". This paragraph lists some of the related work specified in other sections of the Subcontract Documents. These listings are not intended to be all-inclusive. They are presented as a means of aiding the Subcontractor in locating other specification sections containing work that has a close relationship with the work specified in that section. The requirements of the Subcontract Documents, including all specifications, shall apply as a whole.

C. Reference standards are incorporated into the specifications by reference number, title or other designations. The provisions of these standards become a part of the specification as though included in their entirety. When there is a conflict or discrepancy between a reference standard and the specification or with another reference standard, the more stringent requirements shall apply.

D. In the event of a Discrepancy between a drawing and the specification, the specification shall govern.

E. No typographical or other error on drawings shall relieve the Sub-Contractor from his responsibility to perform the intent of this Subcontract.

PART 2 – PRODUCTS (Not Used)

PART 3 – EXECUTION (Not Used)

END OF SECTION

SECTION 01200

PRICE AND PAYMENT PROCEDURES

PART 1 - GENERAL

1.1 SECTION INCLUDES

A. Schedule of values

B. Applications for payment

C. Change procedures

1.2 SCHEDULE OF VALUES

A. Submit printed schedule:
   1. Contractor's standard form or electronic media printout will be considered.

B. Coordination: Coordinate preparation of the Schedule of Values with preparation of Contractor's Construction Schedule.
   1. Correlate line items in the Schedule of Values with other required administrative forms and schedules, including the following:
      a. Application for Payment forms with Continuation Sheets
      b. Submittals Schedule
      c. Contractor's Construction Schedule
   2. Submit the Schedule of Values to the Architect in duplicate within 15 days after date of Owner-Contractor Agreement and the agreed upon finalized schedule of values no later than seven days before the date scheduled for submittal of initial Applications for Payment.

C. Format and Content: Use the Project Manual table of contents as a guide to establish line items for the Schedule of Values. Provide at least one line item for each Specification Section. Identify separately site mobilization, bonds and insurance, and a breakdown of the General Contractors general conditions.
   1. Identification: Include the following Project identification on the Schedule of Values:
      a. Project name and location
      b. Name of Architect
      c. TxDOT project number
      d. Contractor's name and address
      e. Date of submittal
   2. Arrange the Schedule of Values in tabular form with separate columns to indicate the following for each item listed:
      a. Related Specification Section or Division
      b. Description of the Work
      c. Change Orders (numbers) that affect value
      d. Dollar value

1) Percentage of the Contract Sum to nearest one-hundredth percent, adjusted to total 100 percent

3. Provide a breakdown of the Contract Sum in enough detail to facilitate continued evaluation of Applications for Payment and progress reports. Coordinate with the Project Manual table of contents. Provide several line items for principal subcontract amounts, where appropriate.
4. Round amounts to nearest whole dollar; total shall equal the Contract Sum.
5. Provide a separate line item in the Schedule of Values for each part of the Work where Applications for Payment may include materials or equipment purchased or fabricated and stored, but not yet installed.
   a. Differentiate between items stored on-site and items stored off-site. If specified, include evidence of insurance or bonded warehousing.
6. Provide separate line items in the Schedule of Values for initial cost of materials, for each subsequent stage of completion, and for total installed value of that part of the Work.
7. Provide separate line items in the Schedule of Values for each Allowance.
8. Each item in the Schedule of Values and Applications for Payment shall be complete. Include total cost and proportionate share of general overhead and profit for each item.
   a. Temporary facilities and other major cost items that are not direct cost of actual work-in-place may be shown either as separate line items in the Schedule of Values or distributed as general overhead expense, at Contractor's option.
9. Schedule Updating: Update and resubmit the Schedule of Values before the next Applications for Payment when Change Orders or Construction Change Directives result in a change in the Contract Sum.

1.3 APPLICATIONS FOR PAYMENT

A. Submit two copies of each application to Architect for review, 4 days prior to Payment Application Time.

B. Each Application for Payment shall be consistent with previous applications and payments as certified by Architect, TxDOT Project Manager, TxDOT District Representative and paid for by Owner.
   1. Initial Application for Payment, Application for Payment at time of Substantial Completion, and final Application for Payment involve additional requirements.

C. Payment Application Times: The date for each progress payment is indicated in the Agreement between Owner and Contractor. The period of construction Work covered by each Application for Payment is the period indicated in the Agreement.

D. Payment Application Forms: Use forms provided by Owner for Applications for Payment. Use TxDOT format.

E. Application Preparation: Complete every entry on form. Notarize and execute by a person authorized to sign legal documents on behalf of Contractor. Architect and TxDOT Project Manager will return incomplete applications without action.

1. Entries shall match data on the Schedule of Values and Contractor's Construction Schedule. Use updated schedules if revisions were made.
2. Include amounts of Change Orders and Construction Change Directives issued before last day of construction period covered by application.

F. Transmittal: Submit 5 signed and notarized original copies of each Application for Payment to Architect by a method ensuring receipt within 24 hours. One copy shall include waivers of lien and similar attachments if required.
1. Transmit each copy with a transmittal form listing attachments and recording appropriate information about application.

G. Waivers of Mechanic's Lien; with each Application for Payment, submit waivers of mechanic liens for subcontractors, sub-subcontractors, and suppliers for construction period covered by the previous application.
1. Submit partial waivers on each item.
2. When an application shows completion on an item, submit final or full waivers.
3. Owner reserves the right to designate which entities involved in the Work must submit waivers.
4. Submit final Application for Payment with or preceded by final waivers form every entity involved.
5. Waiver Forms: Submit waivers on lien on forms in a manner acceptable to the Owner.

H. Initial Application for Payment: Administrative actions and submittals that must precede or coincide with submittal of first Application for Payment include the following:
1. List of subcontractors
2. Schedule of Values
3. Contractor's Construction Schedule (preliminary if not final)
4. Products list
5. Schedule of unit prices
6. Submittals Schedule (preliminary if not final)
7. List of Contractor's staff assignments
8. List of Contractor's principal consultants
9. Copies of authorizations and licenses from authorities having jurisdiction for performance of the Work
10. Initial progress report
11. Report of preconstruction conference
12. Certificates of insurance and insurance policies
13. Performance and payment bonds
14. Data needed to acquire Owner's insurance

I. Application for Payment at Substantial Completion: After issuing the Certificate of Substantial Completion, submit an Application for Payment showing 100 percent completion for portion of the Work claimed as substantially complete.
1. Include documentation supporting claim that the Work is substantially complete and a statement showing an accounting of changes to the Contract Sum.
2. This application shall reflect Certificates of Partial Substantial Completion issued previously for Owner occupancy of designated portions of the Work.

J. Final Payment Application: Submit final Application for Payment with releases and supporting documentation not previously submitted and accepted, including, but not limited, to the following:
   1. Evidence of completion of Project closeout requirements
   2. Insurance certificates for products and completed operations where required and proof that fees and similar obligations were paid
   3. Updated final statement, accounting for final changes to the Contract Sum
   4. AIA Document G706, "Contractor's Affidavit of Payment of Debts and Claims"
   5. AIA Document G706A, "Contractor's Affidavit of Release of Liens"
   6. AIA Document G707, "Consent of Surety to Final Payment"
   7. Evidence that claims have been settled
   8. Final meter readings for utilities, a measured record of stored fuel, and similar data as of date of Substantial Completion or when Owner took possession of and assumed responsibility for corresponding elements of the Work
   9. Final, liquidated damages settlement statement

K. Submit updated two construction schedules with each Application for Payment.

L. Substantiating Data: When Architect/Engineer requires substantiating information, submit data justifying dollar amounts in question. Include the following with Application for Payment:
   1. Current construction photographs
   2. Construction progress schedules, revised and current

1.4 CHANGE PROCEDURES

A. Submittals: Submit name of individual authorized to receive change documents, and be responsible for informing others in Contractor's employ or Subcontractors of changes to the Work.

B. The Architect/Engineer will advise of minor changes in the Work not involving adjustment to Contract Sum/Price or Contract Time by issuing supplemental instructions.

C. Owner-Initiated Proposal Requests: Architect will issue a detailed description of proposed changes in the Work that may require adjustment to the Contract Sum or the Contract Time. If necessary, the description will include supplemental or revised Drawings and Specifications.
   1. Proposal Requests issued by Architect are for information only. Do not consider them instructions either to stop work in progress or to execute the proposed change.
   2. Within 10 days after receipt of Proposal Request, submit a quotation estimating cost adjustments to the Contract Sum and the Contract Time necessary to execute the change.
      a. Include a list of quantities of products required or eliminated and unit costs, with total amount of purchases and credits to be made. If requested, furnish survey data to substantiate quantities.
      b. Indicate applicable delivery charges, equipment rental, and amounts of trade discounts.
      c. Include costs of labor and supervision directly attributable to the change.

d. Include an updated Contractor's Construction Schedule that indicates the effect of the change, including, but not limited to, changes in activity duration, start and finish times, and activity relationship. Use available total float before requesting an extension of the Contract Time.

D. Contractor-Initiated Proposals: If latent or unforeseen conditions require modifications to the Contract, Contractor may propose changes by submitting a request for a change to Architect.
1. Include a statement outlining reasons for the change and the effect of the change on the Work. Provide a complete description of the proposed change. Indicate the effect of the proposed change on the Contract Sum and the Contract Time.
2. Include a list of quantities of products required or eliminated and unit costs, with total amount of purchases and credits to be made. If requested, furnish survey data to substantiate quantities.
3. Indicate applicable delivery charges, equipment rental, and amounts of trade discounts.
4. Include costs of labor and supervision directly attributable to the change.
5. Include an updated Contractor's Construction Schedule that indicates the effect of the change, including, but not limited to, changes in activity duration, start and finish times, and activity relationship. Use available total float before requesting an extension of the Contract Time.

E. Proposal Request Form: Use AIA Document G709 for Proposal Requests.
1. Document each quotation for change in cost or time with sufficient data to allow evaluation of quotation.

1.5 CHANGE ORDER PROCEDURES

A. On Owner's approval of a Proposal Request, Architect will issue a Change Order for signatures of Owner and Contractor on Owners appropriate form.
1. Execution of Change Orders: Architect/Engineer will issue Change Orders for signatures of parties as provided in Conditions of the Contract.

B. Correlation Of Contractor Submittals:
1. Promptly revise Schedule of Values and Application for Payment forms to record each authorized Change Order as separate line item and adjust Contract Sum/Price.
2. Promptly revise progress schedules to reflect change in Contract Time, revise sub-schedules to adjust times for other items of work affected by the change, and resubmit.
3. Promptly enter changes in Project Record Documents.

1.6 CONSTRUCTION CHANGE DIRECTIVE

A. Construction Change Directive: Architect may issue a Construction Change Directive. Construction Change Directive instructs Contractor to proceed with a change in the Work, for subsequent inclusion in a Change Order.

1. Construction Change Directive contains a complete description of change in the Work. It also designates method to be followed to determine change in the Contract Sum or the Contract Time.

B. Documentation: Maintain detailed records on a time and material basis of work required by the Construction Change Directive.
   1. After completion of change, submit an itemized account and supporting data necessary to substantiate cost and time adjustments to the Contract.

C. The Architect/Engineer will advise of minor changes in the Work not involving adjustment to Contract Sum/Price or Contract Time by issuing supplemental instructions.

PART 2 - PRODUCTS (Not Used)

PART 3 - EXECUTION (Not Used)

END OF SECTION

SECTION 01300

ADMINISTRATIVE REQUIREMENTS

PART 1 - GENERAL

1.1 RELATED SECTIONS

A. 01321 Construction Progress Documents

1.2 SECTION INCLUDES

A. Coordination and project conditions

B. Construction Layout

C. Field engineering

D. Preconstruction meeting

E. Progress meetings

F. Pre-installation meetings

G. Coordination meetings

1.3 COORDINATION AND PROJECT CONDITIONS

A. Coordinate scheduling, submittals, and Work of various sections of Project Manual to ensure efficient and orderly sequence of installation of interdependent construction elements, with provisions for accommodating items installed later.

B. Administrative Procedures: Coordinate scheduling and timing of required administrative procedures with other construction activities and activities of other contractors to avoid conflicts and to ensure orderly progress of the Work. Such administrative activities include, but are not limited to, the following:

1. Provide project superintendent and other supervisory personnel required for proper performance of the work.
2. Participate in a pre-construction meeting at a time and place determined by the Owner for the purpose of identifying responsibilities of the Owner’s and Architect’s personnel and explanation of administrative procedures.
3. Schedule and conduct monthly meetings, distribute meeting Minutes.
4. Schedule and conduct other meetings as necessary, distribute meeting Minutes.
5. Owner to schedule and conduct other meetings as necessary, the Owner will distribute meeting Minutes.
6. Preparation of Contractor's Construction Schedule.
7. Preparation of the Schedule of Values.
8. Installation and removal of temporary facilities and controls.

9. Preparation of the Submittal Review Schedule.
10. Delivery and processing of submittals.
11. Progress meetings.
12. Preinstallation conferences.
13. Project closeout activities.
14. Startup and adjustment of systems.
15. Project closeout activities.
16. Submit bar chart progress schedule, updated monthly.
17. Prepare submittal schedule coordinated with progress schedule.
18. Submit schedule of values, divided so as to facilitate payments to subcontractors, on forms acceptable to the Owner. Schedule, when approved, will be used as the basis for the Contractor's Application for payment.
19. Submit schedule of required tests.
20. Perform all field engineering, layout, and surveying required for layout of project.
21. Submit and post a list of emergency telephone numbers and addresses for individuals to be contacted in case of emergency.
22. Record drawings and specifications to be maintained and annotated by contractor as work progresses to record actual construction, and be turned over to the Architect at substantial completion. See Section 01700 for detailed requirements.
23. Submit payment request procedures.
24. Perform quality control during installation.
25. Clean and protect the work.

C. Conservation: Coordinate construction activities to ensure that operations are carried out with consideration given to conservation of energy, water, and materials.

D. Verify utility requirements and characteristics of operating equipment are compatible with building utilities. Coordinate work of various sections having interdependent responsibilities for installing, connecting to, and placing in service, operating equipment.

E. Coordinate space requirements, supports, and installation of mechanical and electrical Work indicated diagrammatically on Drawings. Follow routing shown for pipes, ducts, and conduit, as closely as practicable; place runs parallel with lines of building. Utilize spaces efficiently to maximize accessibility for other installations, for maintenance, and for repairs.

F. In finished areas except as otherwise indicated, conceal pipes, ducts, and wiring within construction. Coordinate locations of fixtures and outlets with finish elements.

G. Coordinate completion and clean-up of Work of separate sections in preparation for Substantial Completion and for portions of Work designated for Owner's partial occupancy.

H. After Owner occupies the premises any access to complete remaining Work or correct defective Work must be coordinated with the Owner's representative in order to minimize disruption of Owner's activities.

1.4 CONSTRUCTION LAYOUT

A. The General Contractor shall include in his bid the cost for providing all construction staking by a Registered Public Surveyor (Surveyor) licensed by Texas Board of Professional Land Surveyors who can demonstrate experience and competence to perform the work described. The grades, spot elevations, dimensions radii, flow line elevations, existing bench marks, excavation and site grading will be indicated on the plans. In the event that discrepancies are noted in the plans by the Contractor and/or the Surveyor, the Architect and/or Engineer of Record shall be notified and the discrepancies shall be resolved prior to proceeding with the Work. The Surveyor shall supervise the layout work and establish at least three (3) separate permanent bench marks, to which easy access may be had during the progress of the work, to determine and verify lines and grades.

B. Under the supervision of the Surveyor, the layout of the work shall be made from the surveyor-established base lines, utility alignments, curb faces, key trees, bench marks and all other control lines as indicated on the plans; and the Contractor shall be responsible for all measurements in connection therewith as specified and as indicated on the plans.

C. Contractor shall be responsible for having the Surveyor verify that elevations of form work and grading comply with the elevations, lines and grades shown on the plans and provide a report of findings to the Architect and/or Engineer of Record for consideration and response prior to placing concrete, placing asphalt or install landscaping. Contractor shall be responsible for making the required corrections prior to continuing the Work. No extra charge or compensations will be allowed due to differences between actual dimensions and the measurements indicated on the drawings.

D. Employ Land Surveyor registered and acceptable to the Owner.

E. Locate and protect survey control and reference points. Promptly notify Architect/Engineer of discrepancies discovered.

F. Control datum for survey is that established by Owner provided survey.

G. Verify set-backs and easements; confirm drawing dimensions and elevations.

H. Provide field engineering services. Establish elevations, lines, and levels, utilizing recognized engineering survey practices.

I. Submit copy of site drawing signed by Land Surveyor certifying elevations and locations of the Work are in conformance with Contract Documents.

J. Maintain complete and accurate log of control and survey work as Work progresses.

K. Protect survey control points prior to starting site work; preserve permanent reference points during construction.

L. Promptly report to Architect/Engineer loss or destruction of reference point or relocation required because of changes in grades or other reasons.

M. Replace dislocated survey control points based on original survey control. Make no changes without prior written notice to Architect/Engineer.

1.5 PRECONSTRUCTION MEETING

A. The Owner's Representative will schedule a pre-construction conference and organizational meeting at the Project Site or other convenient location after execution of the Agreement and prior to commencement of construction activities. The Owner's Representative will conduct the meeting to review responsibilities and personnel assignments.

B. Attendees shall include: The Owner, Architect/Engineer and their consultants, the Contractor and its superintendent, major subcontractors, manufacturers, suppliers and other concerned parties shall each be represented at the conference by persons familiar with and authorized to conclude matters relating to the Work.

C. The Agenda shall: Discuss items of significance that could affect progress including such topics as:
1. Tentative construction schedule
2. Critical Work sequencing
3. Designation of responsible personnel
4. Procedures for processing field decisions and Change Orders
5. Procedures for processing Applications for Payment
6. Distribution of Contract Documents
7. Submittal of Shop Drawings, Product Data and Samples
8. Preparation of record documents
9. Use of the premises
10. Office, Work and storage areas
11. Equipment deliveries and priorities
12. Safety procedures
13. First Aid
14. Security
15. Housekeeping
16. Working hours

D. The Owner's Representative will record Minutes and distribute copies within five days after meeting to participants, with copies to contractor and those affected by decisions made.
1. General Contractor will distribute Minutes to others.

1.6 PROGRESS MEETINGS

A. Schedule and administer meetings throughout progress of the Work at maximum bi-weekly intervals.
1. Coordinate dates of meetings with preparation of payment requests.

B. Make arrangements for meetings, prepare agenda with copies for participants, preside at meetings.

C. Attendance Required: Job superintendent, major subcontractors and suppliers, Owner, Architect/Engineer, as appropriate to agenda topics for each meeting.

D. Agenda:
1. Review of Minutes of previous meetings
2. Review of Work progress
3. Field observations, problems, and decisions
4. Identification of problems impeding planned progress
5. Review of submittals schedule and status of submittals
6. Review of off-site fabrication and delivery schedules
7. Maintenance of progress schedule
8. Corrective measures to regain projected schedules
9. Planned progress during succeeding work period
10. Coordination of projected progress
11. Maintenance of quality and work standards
12. Effect of proposed changes on progress schedule and coordination
13. Other business relating to Work

E. Record Minutes and distribute copies within three days after meeting to participants, with copies to Architect/Engineer, Owner, and those affected by decisions made.

1.7 PRE-INSTALLATION MEETINGS

A. When required in individual specification sections, convene pre-installation meetings at Project site prior to commencing work of specific section.

B. Require attendance of parties directly affecting, or affected by, Work of specific section.

C. Notify Architect/Engineer and Owner 14 days in advance of meeting date.

D. Prepare agenda and preside at meeting:
1. Review conditions of installation, preparation and installation procedures.
2. Review coordination with related work.
   a. Contract documents
   b. Options
   c. Related Change Orders
   d. Purchases
   e. Deliveries
   f. Shop Drawings, Product Data and Quality Control Samples
   g. Possible Conflicts
   h. Compatibility Problems
   i. Time Schedules
   j. Weather Limitations
   k. Manufacturer's Recommendations
   l. Compatibility of Materials

m. Acceptability of Substrates
n. Temporary Facilities
o. Space and Access Limitations
p. Governing Regulations
q. Safety
r. Inspection and Testing Requirements
s. Recording Requirements
t. Protection

E. Record Minutes and distribute copies within three days after meeting to participants, with copies to Architect/Engineer, Owner, and those affected by decisions made.
1. Do not proceed if the conference cannot be successfully concluded.
2. Initiate whatever actions are necessary to resolve impediments to performance of Work and reconvene the conference at the earliest feasible date.

1.8 COORDINATION MEETINGS

A. Conduct project coordination meetings at regularly scheduled times convenient for all parties involved. Project Coordination meetings are in addition to specific meetings held for other purposes, such as regular progress meetings and specific pre-installation conferences.

B. Request representation at each meeting by every party currently involved in coordination or planning for the construction activities involved.

C. Record meeting decisions or action and distribute copies to everyone in attendance and to others affected by those decisions or actions resulting from each meeting.

PART 2 - PRODUCTS (Not Used)

PART 3 - EXECUTION (Not Used)

END OF SECTION

SECTION 01320

ALLOWANCES

PART 1 - GENERAL

1.1 SECTION INCLUDES

A. This section includes administrative and procedural requirements governing allowances.

Item 1. Certain materials and equipment are specified in the Contract Documents by allowances. These allowances include installation. Allowances have been established in lieu of additional requirements and to defer selection of actual materials and equipment to a later date when additional information is available. If necessary, additional requirements will be issued by Change Order.

B. Types of allowances include the following:

Item 1. Lump Sum allowances based on section 3.3 Schedule of Allowances.

1.2 SELECTION AND PURCHASE

A. At the earliest practical date after award of the Contract, advice Owner of the date when final selection and purchase of each product or system described by an allowance must be completed to avoid delaying the Work.

B. Purchase products and systems selected by Owner from the designated supplier.

1.3 SUBMITTALS

A. Submit proposals for purchase of products or systems included in allowance, in the form specified for Change Orders.

B. Submit invoices of delivery slips to show actual quantities of materials delivered to the site for use in fulfillment of each allowance.

PART 2 - PRODUCTS (Not Used)

PART 3 - EXECUTION

3.1 EXAMINATION

A. Examine products covered by an allowance promptly on delivery for damage or defects. Return damaged or defective products to Manufacturer for replacement.

3.2 PREPARATION

A. Coordinate materials and their installation for each allowance with related materials and installations to ensure that each allowance item is completely integrated and interfaced with related work.

3.3 SCHEDULE OF ALLOWANCES: The following allowance items are in addition to any of the items required, implied, or indicated by the final plans and specifications to be provided. Installation of an allowance item shall be in accordance with the plans and specifications. The cost for the allowance items is to be included in the Total Lump Sum Bid amount for this project. The use and location of an allowance item will be as directed by the Owner. The unit price for an allowance item will be used to determine both "add" and "deduct" pricing during the Contract Time. Owner will be credited for unused allowance items at the completion of the project using the unit price as the basis of credit.

Item 1. The General Contractor will provide an allowance of **5** installations of free-standing (floor to ceiling), "dedicated circuit" power poles complete and operable. Each installation shall include but not be limited to: 20 amp branch circuit breaker, run of up to 150 feet of conduit, ceiling J-Box, run of up to 20 feet of flex conduit, and (3) #10 AWG copper conductors. Wire AWG sizes specified are minimum and shall be increased in size in accordance with NEC requirements when applicable at no additional cost. The power poles shall be Wire mold Model No. 25DTP-4 or approved equal.

Item 2. The General Contractor will provide an allowance of **5** installations of electrical circuits and connections of modular furniture power poles and/or base power feeds. Each installation shall include but not be limited to: 4 - 20 amp branch circuit breakers, up to 150 feet of conduit, up to 4 ceiling / wall J-Box(s), up to 20 feet of flex conduit per J-Box, and (6) #10 and (2) # 12 AWG copper conductors color coded as specified. For base power feed installation in wall raceway and wall box shall be included. Wire AWG sizes specified are minimum and shall be increased in size in accordance with the requirements of the Note following the table titled "Texas Department of Transportation Wire Standard". Surface mounted raceway may be used in lieu of in wall raceway and wall box for base power feed only in locations approved by the Owner at no additional cost.

Item 3. The General Contractor will provide an allowance of **5** installations of modular furniture voice/data outlets. Installation of a voice/data outlet shall include all items specified, ancillary to, and necessary for complete and operable voice and data network circuits. Each installation shall include but not be limited to up to 325 feet of each cable required per outlet installation.

Item 4. The General Contractor will provide an allowance of **5** installations of wall mounted voice/data outlets. Installation of a voice/data outlet shall include all items specified, ancillary to, and necessary for complete and operable voice and data network circuits. Each installation shall include but not be limited to up to 325 feet of each cable required per outlet installation. In wall raceway installation shall include back

box, ¾" conduit, pull cord, insulated bushing and any items necessary for a complete raceway installation.

Item 5. The General Contractor will provide an allowance of **2** installations of an interior solid core doors hollow metal frames, and complete hardware sets. Installation of an interior solid core door, hollow metal frame, and complete hardware set shall include all items specified, ancillary to, and necessary for a complete, finished, and operable interior door. Installation of an interior solid core door shall include, but not be limited to, solid core door, hollow metal frame, butts, lockset, silencers, door stop, door closer, and finishes.

Item 6. The General Contractor will provide an allowance of **20** linear feet of ceiling height metal stud drywall partition installations, 3 5/8, 25 gauge metal stud at 16" o.c. Installation of a ceiling height metal stud drywall partition shall include all items specified, ancillary to, and necessary for complete installation to include, but not be limited to, taped, floated, textured, painted, base, and ceiling and flooring adjustments.

Item 7. The General Contractor will provide an allowance of **5** single pole light switch installations. Installation of single pole light switch shall include all items specified, ancillary to, and necessary for complete installation to include, but not be limited to, single pole switch, box(s), conduit, fittings, wire, connections, and face plate.

Item 8. The General Contractor will provide an allowance of **5** single circuit wall receptacle installations. Installation of single circuit wall receptacle shall include all items specified, ancillary to, and necessary for complete installation to include, but not be limited to, receptacle, box(s), conduit, fittings, wire, connections, circuit breaker, and face plate.

Item 9. The General Contractor will provide an allowance of **5** single wall receptacle installations. Installation of single wall receptacle shall include all items specified, ancillary to, and necessary for complete installation to include, but not be limited to, receptacle, box(s), conduit, fittings, wire, connections, face plate, and one circuit breaker per 8 receptacles.

Item 10. The General Contractor will provide an allowance of **5** fluorescent 2 x 4 lay in light fixture installations. Installation of fluorescent light fixture shall include all items specified, ancillary to, and necessary for complete installation to include, but not be limited to, fluorescent light fixture, box(s), flex conduit, fittings, wire, and connections.

Item 11. The General Contractor will provide an allowance of **100** l.f. of security fencing installation. Installation of security fencing shall include all items specified, ancillary to, and necessary for a complete installation.

Item 12. The General Contractor will provide an allowance of **100** s.f. of Vinyl Composition Tile (VCT) and 50 l.f. of rubber base installation. Installation of VCT and rubber base

shall include all items specified, ancillary to, and necessary for a complete installation.

Item 13. The General Contractor will provide an allowance of **450** Square Yards of Asphalt Paving and Flexible Base. Installation of Asphalt Pavement and Flexible Base material shall include all items specified, ancillary to, and necessary for a complete installation.

Item 14. $50,000 Landscape Allowance for Plants and sod around building. See Landscape Plans for detailed specifications.

END OF SECTION

SECTION 01321

CONSTRUCTION PROGRESS DOCUMENTATION

PART 1 - GENERAL

1.1 RELATED DOCUMENTS

A. Drawings and general provisions of the Contract, including General and Supplementary Conditions and other Division 1 Specification Sections, apply to this Section.

1.2 SUMMARY

A. This Section includes administrative and procedural requirements for documenting the progress of construction during performance of the Work, including the following:
   1. Contractor's Construction Schedule
   2. Submittals Schedule
   3. Daily construction reports
   4. Field condition reports
   5. Special reports

B. Related Sections include the following:
   1. Division 1 Section "Payment Procedures" for submitting the Schedule of Values
   2. Division 1 Section "Project Management and Coordination" for submitting and distributing meeting and conference minutes
   3. Division 1 Section "Submittal Procedures" for submitting schedules and reports
   4. Division 1 Section "Quality Requirements" for submitting a schedule of tests and inspections

1.3 SUBMITTALS

A. Submittals Schedule: Submit four copies of schedule and electronic file in MS Office Project. Arrange the following information in a tabular format:
   1. Scheduled date for first submittal
   2. Specification Section number and title
   3. Submittal category (action or informational)
   4. Name of subcontractor
   5. Description of the Work covered
   6. Scheduled date for Architect's final release or approval

B. Contractor's Construction Schedule: Submit four opaque copies of initial schedule, large enough to show entire schedule for entire construction period.

C. CPM Reports: Concurrent with CPM schedule, submit four copies of each of the following computer-generated reports. Format for each activity in reports shall contain activity number, activity description, cost and resource loading, original duration, remaining duration, early start date, early finish date, late start date, late finish date, and total float in calendar days.
   1. Activity Report: List of all activities sorted by activity number and then early start date, or actual start date if known.

2. Logic Report: List of preceding and succeeding activities for all activities, sorted in ascending order by activity number and then early start date, or actual start date if known.
3. Total Float Report: List of all activities sorted in ascending order of total float.
4. Earnings Report: Compilation of Contractor's total earnings from the Notice to Proceed until most recent Application for Payment.

D. Daily Construction Reports: Submit two copies at monthly intervals, when requested.

E. Field Condition Reports: Submit two copies at time of discovery of differing conditions.

F. Special Reports: Submit two copies at time of unusual event.

1.4 COORDINATION

A. Coordinate preparation and processing of schedules and reports with performance of construction activities and with scheduling and reporting of separate contractors.

B. Coordinate Contractor's Construction Schedule with the Schedule of Values, list of subcontracts, Submittals Schedule, progress reports, payment requests, and other required schedules and reports.
1. Secure time commitments for performing critical elements of the Work from parties involved.
2. Coordinate each construction activity in the network with other activities and schedule them in proper sequence.

PART 2 - PRODUCTS

2.1 SUBMITTALS SCHEDULE

A. Preparation: Submit a schedule of submittals, arranged in chronological order by dates required by construction schedule. Include time required for review, resubmittal, ordering, manufacturing, fabrication, and delivery when establishing dates.
1. Coordinate Submittals Schedule with list of subcontracts, the Schedule of Values, and Contractor's Construction Schedule.
2. If a Preliminary Construction Schedule is not required, delete subparagraph below or revise to require initial submittal within 14 days of date established for commencement of the Work.
3. Delete subparagraph below if not allowed.
4. Revise subparagraph below if schedule must be continuously updated to reflect current status and changes in timing for submittals.
5. Final Submittal: Submit concurrently with the first complete submittal of Contractor's Construction Schedule.

2.2 CONTRACTOR'S CONSTRUCTION SCHEDULE, GENERAL

A. Procedures: Comply with procedures contained in AGC's "Construction Planning & Scheduling."

B. Time Frame: Extend schedule from date established for the Notice to Proceed to date of Substantial Completion.
   1. Contract completion date shall not be changed by submission of a schedule that shows an early completion date, unless specifically authorized by Change Order.

C. Activities: Treat each separate area as a separate numbered activity for each principal element of the Work. Comply with the following:
   1. Activity Duration: Define activities so no activity is longer than 20 days, unless specifically allowed by Architect.
   2. Procurement Activities: Include procurement process activities for the following long lead items and major items, requiring a cycle of more than 60 days, as separate activities in schedule. Procurement cycle activities include, but are not limited to, submittals, approvals, purchasing, fabrication, and delivery.
   3. Submittal Review Time: Include review and resubmittal times indicated in Division 1 Section "Submittal Procedures" in schedule. Coordinate submittal review times in Contractor's Construction Schedule with Submittals Schedule.
   4. Startup and Testing Time: Include not less than seven days for startup and testing.
   5. Substantial Completion: Indicate completion in advance of date established for Substantial Completion, and allow time for Architect's and TxDOT Project Manager administrative procedures necessary for certification of Substantial Completion.

D. Constraints: Include constraints and work restrictions indicated in the Contract Documents and as follows in schedule, and show how the sequence of the Work is affected.
   1. Phasing: Arrange list of activities on schedule by phase.
   2. Products Ordered in Advance: Include a separate activity for each product. Include delivery date indicated in Division 1 Section "Summary." Delivery dates indicated stipulate the earliest possible delivery date.
   3. Owner-Furnished Products: Include a separate activity for each product. Include delivery date indicated in Division 1 Section "Summary." Delivery dates indicated stipulate the earliest possible delivery date.
   4. Work Restrictions: Show the effect of the following items on the schedule:
      a. Seasonal variations
      b. Environmental control
   5. Work Stages: Indicate important stages of construction for each major portion of the Work, including, but not limited to, the following:
      a. Submittals
      b. Mockups
      c. Fabrication
      d. Sample testing
      e. Deliveries
      f. Installation
      g. Tests and inspections
      h. Adjusting
      i. Curing
      j. Startup and placement into final use and operation
   6. Area Separations: Identify each major area of construction for each major portion of the Work. Indicate where each construction activity within a major area

must be sequenced or integrated with other construction activities to provide for the following:

a. Structural completion
b. Permanent space enclosure
c. Completion of mechanical installation
d. Completion of electrical installation
e. Substantial Completion

E. Milestones: Include milestones indicated in the Contract Documents in schedule, including, but not limited to, the Notice to Proceed, Substantial Completion, and Final Completion.
First paragraph below establishes progress measured in dollar volume of the Work.

F. Cost Correlation: At the head of schedule, provide a cost correlation line, indicating planned and actual costs. On the line, show dollar volume of the Work performed as of dates used for preparation of payment requests.

1. Refer to Division 1 Section "Payment Procedures" for cost reporting and payment procedures.
2. Retain three subparagraphs below for CPM schedule.
3. Contractor shall assign cost to construction activities on the CPM schedule. Costs shall not be assigned to submittal activities unless specified otherwise but may, with Architect's approval, be assigned to fabrication and delivery activities. Costs shall be under required principal subcontracts for testing and commissioning activities, operation and maintenance manuals, punch list activities, Project Record Documents, and demonstration and training (if applicable), in the amount of 5 percent of the Contract Sum.
4. Each activity cost shall reflect an accurate value subject to approval by Architect.
5. Total cost assigned to activities shall equal the total Contract Sum.

G. Contract Modifications: For each proposed contract modification and concurrent with its submission, prepare a time-impact analysis using fragnets to demonstrate the effect of the proposed change on the overall project schedule.

2.3 CONTRACTOR'S CONSTRUCTION SCHEDULE (CPM SCHEDULE)

A. General: Prepare network diagrams using AON (activity-on-node) format.

B. Projects using CPM schedules should begin with a preliminary network diagram of type described below or a preliminary bar-chart schedule.

C. Preliminary Network Diagram: Submit diagram within 14 days of date established for the Notice to Proceed. Outline significant construction activities for the first 60 days of construction. Include skeleton diagram for the remainder of the Work and a cash requirement prediction based on indicated activities.

D. Revise paragraph and subparagraphs below to suit Project.

E. CPM Schedule: Prepare Contractor's Construction Schedule using a computerized, time-scaled CPM network analysis diagram for the Work.

1. Develop network diagram in sufficient time to submit CPM schedule so it can be accepted for use no later than 14 days after date established for the Notice to Proceed.
    a. Failure to include any work item required for performance of this Contract shall not excuse Contractor from completing all work within applicable completion dates, regardless of Architect's approval of the schedule.
2. Establish procedures for monitoring and updating CPM schedule and for reporting progress. Coordinate procedures with progress meeting and payment request dates.
3. Use "one workday" as the unit of time. Include list of nonworking days and holidays incorporated into the schedule.

F. CPM Schedule Preparation: Prepare a list of all activities required to complete the Work. Using the preliminary network diagram, prepare a skeleton network to identify probable critical paths.
1. Activities: Indicate the estimated time duration, sequence requirements, and relationship of each activity in relation to other activities. Include estimated time frames for the following activities:
    a. Preparation and processing of submittals
    b. Mobilization and demobilization
    c. Purchase of materials
    d. Delivery
    e. Fabrication
    f. Installation
    g. Testing
2. Critical Path Activities: Identify critical path activities, including those for interim completion dates. Scheduled start and completion dates shall be consistent with Contract milestone dates.
3. Processing: Process data to produce output data on a computer-drawn, time-scaled network. Revise data, reorganize activity sequences, and reproduce as often as necessary to produce the CPM schedule within the limitations of the Contract Time.
4. Format: Mark the critical path. Locate the critical path near center of network; locate paths with most float near the edges.
    a. Subnetworks on separate sheets are permissible for activities clearly off the critical path.

G. Initial Issue of Schedule: Prepare initial network diagram from a list of straight "early start-total float" sort. Identify critical activities. Prepare tabulated reports showing the following:
1. Contractor or subcontractor and the Work or activity
2. Description of activity
3. Principal events of activity
4. Immediate preceding and succeeding activities
5. Early and late start dates
6. Early and late finish dates
7. Activity duration in workdays
8. Total float or slack time
9. Average size of workforce

10. Dollar value of activity (coordinated with the Schedule of Values)

H. Schedule Updating: Concurrent with making revisions to schedule, prepare tabulated reports showing the following:
1. Identification of activities that have changed
2. Changes in early and late start dates
3. Changes in early and late finish dates
4. Changes in activity durations in workdays
5. Changes in the critical path
6. Changes in total float or slack time
7. Changes in the Contract Time

2.4 REPORTS

A. Daily Construction Reports: Prepare a daily construction report recording the following information concerning events at Project site:
1. List of subcontractors at Project site
2. Approximate count of personnel at Project site
3. Material deliveries
4. High and low temperatures and general weather conditions
5. Accidents
6. Meetings and significant decisions
7. Unusual events (refer to special reports)
8. Stoppages, delays, shortages, and losses
9. Emergency procedures
10. Orders and requests of authorities having jurisdiction
11. Change Orders received and implemented
12. Construction Change Directives are used by AIA Document A201
EJCDC Document 1910-8 uses Work Change Directives
13. Construction Change Directives received and implemented
14. Services connected and disconnected
15. Equipment or system tests and startups
16. Substantial Completions authorized

B. Field Condition Reports: Immediately on discovery of a difference between field conditions and the Contract Documents, prepare and submit a detailed report. Submit with a request for interpretation on CSI Form 13.2A. Include a detailed description of the differing conditions, together with recommendations for changing the Contract Documents.

2.5 SPECIAL REPORTS

A. General: Submit special reports directly to Owner within one day(s) of an occurrence. Distribute copies of report to parties affected by the occurrence.

B. Retain paragraph below if Owner is unusually sensitive about public relations.

C. Reporting Unusual Events: When an event of an unusual and significant nature occurs at Project site, whether or not related directly to the Work, prepare and submit a special report. List chain of events, persons participating, response by Contractor's personnel,

evaluation of results or effects, and similar pertinent information. Advise Owner in advance when these events are known or predictable.

PART 3 - EXECUTION

3.1 CONTRACTOR'S CONSTRUCTION SCHEDULE

A. Contractor's Construction Schedule Updating: At monthly intervals, update schedule to reflect actual construction progress and activities. Issue schedule one week before each regularly scheduled progress meeting.
   1. Revise schedule immediately after each meeting or other activity where revisions have been recognized or made. Issue updated schedule concurrently with the report of each such meeting.
   2. Include a report with updated schedule that indicates every change, including, but not limited to, changes in logic, durations, actual starts and finishes, and activity durations.
   3. As the Work progresses, indicate Actual Completion percentage for each activity.

B. Distribution: Distribute copies of approved schedule to Architect, Owner, separate contractors, testing and inspecting agencies, and other parties identified by Contractor with a need-to-know schedule responsibility.
   1. Post copies in Project meeting rooms and temporary field offices.
   2. When revisions are made, distribute updated schedules to the same parties and post in the same locations. Delete parties from distribution when they have completed their assigned portion of the Work and are no longer involved in performance of construction activities.

C. Distribution: Provide electronic copy to Architect in MS Office Project format.

END OF SECTION

SECTION 01330

SUBMITTAL PROCEDURES

PART 1 - GENERAL

1.1 SECTION INCLUDES

A. Submittal procedures

B. Construction progress schedules

C. Proposed products list

D. Subcontractor List

E. Product data

F. Shop drawings

G. Samples

H. Design data

I. Test reports

J. Certificates

K. Manufacturer's instructions

L. Manufacturer's field reports

M. Erection drawings

N. Construction photographs

O. Project Warranty And Maintenance Manual

1.2 SUBMITTAL PROCEDURES

A. General: Electronic copies of CAD Drawings of the Contract Drawings will not be provided by Architect for Contractor's use in preparing submittals. A submittal schedule spreadsheet document 01330B outlining all section 2 through 16 submittals required is attached to the end of this section. The electronic version of this spreadsheet will be provided to the Contractor at the Pre-Construction meeting to use during the project.

B. Coordination: Coordinate preparation and processing of submittals with performance of construction activities.

1. Coordinate each submittal with fabrication, purchasing, testing, delivery, other submittals, and related activities that require sequential activity.
2. Coordinate transmittal of different types of submittals for related parts of the Work so processing will not be delayed because of need to review submittals concurrently for coordination.
    a. Architect reserves the right to withhold action on a submittal requiring coordination with other submittals until related submittals are received.

C. Processing Time: Allow enough time for submittal review, including time for resubmittals, as follows. Time for review shall commence on Architect's receipt of submittal. No extension of the Contract Time will be authorized because of failure to transmit submittals enough in advance of the Work to permit processing, including resubmittals.
1. Initial Review: Allow 21 days for initial review of each submittal. Allow additional time if coordination with subsequent submittals is required. Architect will advise Contractor when a submittal being processed must be delayed for coordination.
2. Intermediate Review: If intermediate submittal is necessary, process it in same manner as initial submittal.
3. Resubmittal Review: Allow 15 days for review of each resubmittal.
4. Concurrent Consultant Review: Where the Contract Documents indicate that submittals may be transmitted simultaneously to Architect and to Architect's consultants, allow 21 days for review of each submittal. Submittal will be returned to Architect before being returned to Contractor.
5. Schedule submissions at least 40 days before reviewed submittals will be needed, in accordance with the above review times noted above (the above allows for one resubmittal review and distribution) and approved submittal schedule.

D. Insert list of submittals below allowing concurrent review or delete and identify submittals in Sections where they are specified. Structural, mechanical, plumbing, and electrical components are examples of the Work that often require simultaneous transmittal to Architect and consultants.

E. Apply Contractor's stamp, signed or initialed certifying that review, approval, verification of products required, field dimensions, adjacent construction Work, and coordination of information is in accordance with requirements of the Work and Contract Documents.
1. Coordinate each submittal with requirements of work of Contract Documents.
2. Contractor’s responsibility for errors and omissions in submittals is not relieved by Architect’s review of submittals.
3. Contractor’s responsibility for deviations in submittals from requirements of Contract Documents is not relieved by Architect’s review of submittals, unless Architect gives written acceptance of specific deviations.
4. Notify Architect, in writing at time of submission, of deviations in submittals from requirements of Contract Documents.

F. Identification: Place a permanent label or title block on each submittal for identification.
1. Indicate name of firm or entity that prepared each submittal on label or title block.

2. Provide a space approximately 6 by 8 inches on label or beside title block to record Contractor's review and approval markings and action taken by Architect.
3. Include the following information on label for processing and recording action taken:
    a. Project name
    b. Date
    c. Name and address of Architect
    d. Name and address of Contractor
    e. Name and address of Subcontractor
    f. Name and address of Supplier
    g. Name of Manufacturer
    h. Submittal number or other unique identifier, including revision identifier.
        1) Submittal number shall use Specification Section number followed by a decimal point and then a sequential number (e.g., 06100.01). Resubmittals shall include an alphabetic suffix after another decimal point (e.g., 06100.01.A).
    i. Number and title of appropriate Specification Section
    j. Drawing number and detail references, as appropriate
    k. Location(s) where product is to be installed, as appropriate
    l. Other necessary identification

G. Deviations: Highlight, encircle, or otherwise specifically identify deviations from the Contract Documents on submittals.

H. Additional Copies: Unless additional copies are required for final submittal, and unless Architect observes noncompliance with provisions in the Contract Documents, initial submittal may serve as final submittal.
1. Submit one copy of submittal to concurrent reviewer in addition to specified number of copies to Architect.
2. Additional copies submitted for maintenance manuals will not be marked with action taken and will be returned.

I. Transmittal: Package each submittal individually and appropriately for transmittal and handling. Transmit each submittal using a transmittal form. Architect will return submittals, without review, received from sources other than Contractor.
1. Transmittal Form: Use form acceptable to the Owner and Architect. Provide locations on form for the following information:
    a. Project name
    b. Date
    c. Destination (To)
    d. Source (from)
    e. Names of Subcontractor, Manufacturer, and Supplier
    f. Category and type of submittal
    g. Submittal purpose and description
    h. Specification Section number and title
    i. Drawing number and detail references
    j. Transmittal number, numbered consecutively
    k. Submittal and transmittal distribution record
    l. Remarks

m. Signature of Transmitter

2. On an attached separate sheet, prepared on Contractor's letterhead, record relevant information, requests for data, revisions other than those requested by Architect on previous submittals, and deviations from requirements in the Contract Documents, including minor variations and limitations. Include same label information as related submittal.

J. Resubmittals: Make resubmittals in same form and number of copies as initial submittal.
1. When revised for resubmission, identify changes made since previous submission.
2. Mark revised submittals with original number and sequential alphabetic suffix. Note date and content of previous submittal.
3. Note date and content of revision in label or title block and clearly indicate extent of revision.

K. Allow space on submittals for Contractor and Architect/Engineer review stamps.

L. Resubmit submittals until they are marked ‘REVIEWED’.

M. Distribution: Furnish copies of final submittals to Manufacturers, Subcontractors, Suppliers, Fabricators, Installers, authorities having jurisdiction, and others as necessary for performance of construction activities. Show distribution on transmittal forms.
1. Distribute copies of reviewed submittals as appropriate. Instruct parties to promptly report inability to comply with requirements.

N. Use for Construction: Use only final submittals with mark indicating ‘REVIEWED’.
1. Begin no work which requires submittals until return of submittals with Architect’s stamp and initials or signature indicating review.

O. Submittals not requested will not be recognized or processed.

1.3 CONSTRUCTION PROGRESS SCHEDULES

A. Submit preliminary outline Schedules within 15 days after date of Owner-Contractor Agreement for coordination with Owner's requirements. After review, submit detailed schedules within 7 days modified to accommodate revisions recommended by Architect/Engineer and Owner.

B. Related Section 01321 – Construction Progress Documentation: Submit revised Progress Schedules with each Application for Payment.

C. Distribute copies of reviewed schedules to Project site file, Subcontractors, Suppliers, and other concerned parties.

D. Instruct recipients to promptly report, in writing, problems anticipated by projections indicated in schedules.

E. Submit computer generated horizontal bar chart or other approved form with separate line for each section of Work, identifying first work day of each week.

F. Show complete sequence of construction by activity, identifying Work of separate stages and other logically grouped activities. Indicate early and late start, early and late finish, float dates, and duration.

G. Indicate estimated percentage of completion for each item of Work at each submission.

H. Submit separate schedule of submittal dates for shop drawings, product data, and samples, including Owner furnished products and products identified under Allowances, and dates reviewed submittals will be required from Architect/Engineer. Indicate decision dates for selection of finishes.

I. Indicate delivery dates for Owner furnished products and products identified under Allowances.

J. Revisions To Schedules:
   1. Indicate progress of each activity to date of submittal, and projected completion date of each activity.
   2. Identify activities modified since previous submittal, major changes in scope, and other identifiable changes.
   3. Prepare narrative report to define problem areas, anticipated delays, and impact on Schedule. Report corrective action taken, or proposed, and its effect including effect of changes on schedules of separate Contractors.

1.4 PROPOSED PRODUCTS LIST

A. Within 15 days after date of Owner-Contractor Agreement, submit list of major products proposed for use, with name of Manufacturer, trade name, and model number of each product.

B. For products specified only by reference standards, give Manufacturer, trade name, model or catalog designation, and reference standards.

1.5 SUBCONTRACTOR LIST

A. Prepare a written summary identifying individuals or firms proposed for each portion of the Work, including those who are to furnish products or equipment fabricated to a special design. Include the following information in tabular form:
   1. Name, address, and telephone number of entity perform subcontract or supplying products
   2. Number and title of related Specification Sections(s) cover by Subcontractor
   3. Drawing number and detail references, as appropriate, covered by subcontract

B. Submit three copies of Subcontractor list, unless otherwise indicated. Architect will return two copies.
   1. Mark up and retain one returned copy as a Project Record Document.

1.6 PRODUCT DATA

A. General: Prepare and submit Action Submittals required by individual Specification Sections.

B. Product Data: Submit to Architect/Engineer for review for limited purpose of checking for conformance with information given and design concept expressed in Contract Documents.

C. Submit number three Contractor copies, plus two copies Architect/Engineer will retain.

D. Mark each copy to identify applicable products, models, options, and other data. Supplement Manufacturers' standard data to provide information specific to this Project.

E. Indicate product utility and electrical characteristics, utility connection requirements, and location of utility outlets for service for functional equipment and appliances.

F. After review, produce copies and distribute in accordance with SUBMITTAL PROCEDURES article and for record documents described in Section 01700.

1.7 SHOP DRAWINGS

A. Prior to submitting shop drawings, Contractor shall furnish Architect with complete Shop Drawing Submittal Log. No Submittals will be reviewed until a complete Submittal Log has been submitted to Architect.
   1. Contractor shall submit all required shop drawings and product data to the Architect with reasonable promptness and in an orderly sequence so as to cause no delay in the work.
   2. Prepare and submit, with construction schedule, a separate schedule listing dates for submission and lead dates for reviewed shop drawings, product data and samples for each item.
   3. No extension of time shall be allowed because of failure to properly coordinate and sequence submittals.

B. Shop Drawings: Submit to Architect/Engineer for review for limited purpose of checking for conformance with information given and design concept expressed in Contract Documents.

C. Shop Drawings: Prepare Project-specific information, drawn accurately to scale. Do not base Shop Drawings on reproductions of the Contract Documents or standard printed data.
   1. Preparation: Fully illustrate requirements in the Contract Documents. Include the following information, as applicable:
      a. Dimensions
      b. Identification of products
      c. Fabrication and installation drawings
      d. Roughing-in and setting diagrams
      e. Wiring diagrams showing field-installed wiring, including power, signal, and control wiring

f. Shopwork manufacturing instructions
g. Templates and patterns
h. Schedules
i. Design calculations
j. Compliance with specified standards
k. Notation of coordination requirements
l. Notation of dimensions established by field measurement
m. Relationship to adjoining construction clearly indicated
n. Seal and signature of professional engineer if specified
o. Wiring Diagrams: Differentiate between Manufacturer-installed and field-installed wiring

2. Sheet Size: Except for templates, patterns, and similar full-size drawings, submit Shop Drawings on sheets at least 8-1/2 by 11 inches but no larger than 22 by 24 inches.
3. Number of Copies: Submit five opaque copies of each submittal, unless copies are required for operation and maintenance manuals. Architect will retain two copies; remainder will be returned. Mark up and retain one returned copy as a Project Record Drawing

D. Indicate special utility and electrical characteristics, utility connection requirements, and location of utility outlets for service for functional equipment and appliances.

E. All work must ultimately comply with the contract documents unless Architect/Engineer gives specific written acceptance of specific deviations.

F. After review, produce copies and distribute in accordance with SUBMITTAL PROCEDURES article and for record documents described in Section 01700.

1.8 SAMPLES

A. Samples: Submit to Architect/Engineer for review for limited purpose of checking for conformance with information given and design concept expressed in Contract Documents.

B. Samples For Initial Selection as Specified in Product Sections:
1. Submit to Architect/Engineer for aesthetic, color, or finish selection.
2. Submit samples of finishes from full range of Manufacturers' standard colors, textures, and patterns for Architect/Engineer selection.

C. Submit samples to illustrate functional and aesthetic characteristics of Products, with integral parts and attachment devices. Coordinate sample submittals for interfacing work.

D. Include identification on each sample, with full Project information.

E. Submit number of samples specified in individual specification sections; Architect/Engineer will retain two samples.
1. Architect will retain two Sample sets; remainder will be returned. Mark up and retain one returned Sample set as a Project Record Sample.
2. Retain one sample on construction site for field comparison as needed.

F. Samples will not be used for testing purposes unless specifically stated in specification section.

G. After review, produce duplicates and distribute in accordance with SUBMITTAL PROCEDURES article and for record documents purposes described in Section 01700.

1.9 DESIGN DATA

A. Submit for Architect/Engineer's knowledge as contract administrator or for Owner.

B. Submit for information for limited purpose of assessing conformance with information given and design concept expressed in Contract Documents.

1.10 TEST REPORTS

A. Submit for Architect/Engineer's knowledge as contract administrator or for Owner.

B. Submit test reports for information for limited purpose of assessing conformance with information given and design concept expressed in Contract Documents.

1.11 CERTIFICATES

A. When specified in individual specification sections, submit certification by Manufacturer, installation/application Subcontractor, or Contractor to Architect/Engineer, in quantities specified for Product Data.

B. Indicate material or product conforms to or exceeds specified requirements. Submit supporting reference data, affidavits, and certifications as appropriate.

C. Certificates may be recent or previous test results on material or Product, but must be acceptable to Architect/Engineer.

1.12 MANUFACTURER'S INSTRUCTIONS

A. When specified in individual specification sections, submit printed instructions for delivery, storage, assembly, installation, start-up, adjusting, and finishing, to Architect/Engineer for delivery to Owner in quantities specified for Product Data.

B. Indicate special procedures, perimeter conditions requiring special attention, and special environmental criteria required for application or installation.

1.13 MANUFACTURER'S FIELD REPORTS

A. Submit reports for Architect/Engineer's benefit as contract administrator or for Owner.

B. Submit report within 10 days of observation to Architect/Engineer for information.

C. Submit for information for limited purpose of assessing conformance with information given and design concept expressed in Contract Documents.

1.14 ERECTION DRAWINGS

A. Submit drawings for Architect/Engineer's benefit as contract administrator or for Owner.

B. Submit for information for limited purpose of assessing conformance with information given and design concept expressed in Contract Documents.

C. Data indicating inappropriate or unacceptable Work may be subject to action by Architect/Engineer or Owner.

1.15 CONSTRUCTION PHOTOGRAPHS

A. Provide photographs of site and construction throughout progress of Work produced by photographer, acceptable to Architect/Engineer.

B. Each month submit photographs with Application for Payment.

C. Photographs: One print prints; color, glossy; 4 x 6 inch size; mounted on soft card stock, with left edge binding margin for three hole punch.

D. Take two site photographs from differing directions and six interior photographs indicating relative progress of the Work, 3 days maximum prior to submitting.

E. Identify each print on front. Identify name of Project, contract number orientation of view, date and time of view.

F. Deliver negatives or electronic data to Owner with project record documents. Catalog and index negatives in chronological sequence; include typed table of contents.

1.16 PROJECT WARRANTY AND MAINTENANCE MANUAL:

A. Prior to final payment, the Contractor shall furnish two complete sets, in tabbed standard size ring binders, of equipment data, maintenance information, operations instructions, and warranties for equipment and systems provided under this contract. See Section 01700 for detailed requirements.

B. Provide warranties as specified. Warranties shall not limit length of time for remedy of damages Owner may have by legal statute. Contractor, Supplier, or Installer responsible for performance of warranty shall sign warranties.

C. Material Safety Data Sheets (MSDSs): Submit information directly to Owner; do not submit to Architect, except as required in "Action Submittals" Article.
   1. Architect will not review submittals that include MSDSs and will return the entire submittal for resubmittal.

PART 2 - PRODUCTS (Not Used)

PART 3 - EXECUTION

3.1 CONTRACTOR'S REVIEW

A. Review each submittal and check for coordination with other Work of the Contract and for compliance with the Contract Documents. Note corrections and field dimensions. Mark with approval stamp before submitting to Architect.

B. Approval Stamp: Stamp each submittal with a uniform, approval stamp. Include Project name and location, submittal number, Specification Section title and number, name of reviewer, date of Contractor's approval, and statement certifying that submittal has been reviewed, checked, and approved for compliance with the Contract Documents.

PART 4 - ARCHITECT'S/ACTION

4.1 General: Architect will not review submittals that do not bear Contractor's approval stamp and will return them without action.

A. Action Submittals: Architect will review each submittal, make marks to indicate corrections or modifications required, and return it. Architect will stamp each submittal with an action stamp and will mark stamp appropriately to indicate action taken.

B. Informational Submittals: Architect will review each submittal and will not return it, or will return it if it does not comply with requirements. Architect will forward each submittal to appropriate party.

C. Partial submittals are not acceptable, will be considered nonresponsive, and will be returned without review.

D. Submittals not required by the Contract Documents may not be reviewed and may be discarded.

END OF SECTION

MNT DIVISION/FACILITIES MANAGEMENT
150 E. RIVERSIDE DRIVE
AUSTIN, TEXAS 78704
512/416-3048

SUBMITTAL SCHEDULE

SECTION NUMBER	DESCRIPTION	Color Charts	Certified Test Reports	Design Data	Inspection Reports	Installer / Subcontractor Qualifications	Manufacturer's Qualifications	Manufacturer's Installation Instructions	Manufacturer's Material Certificates	Mock Ups	Notes	Operations and Maintenance Manuals	Product Data	Product Warranty	Project Record Documents	Samples	Schedule	Shop Drawings	Submittal Number	Date Received Submittal	Date Submitted to A/E	Date Due A/E	Date A/E Returned
DIVISION 1	**GENERAL REQUIREMENTS**																						
	This Submittal Schedule does not include submittals required in Division 1. Contractor must provide all submittals required therein.																						
DIVISION 2	**SITE WORK**																						
02100	Site Clearing																						
02200	Earthwork															X							
02210	Geotechnical Data																						
02224	Trenching										1												
02362	Termite Control					X							X	X									
02446	Boring and Jacking Conduits			X		X					2							X					
02512	Site Water Distribution												X		X								
02516	Disinfection of Water Distribution		X								3		X										
02538	Sanitary Sewer System												X		X								
02741	Hot Mix Asphalt Paving / Striping		X						X		4		X										
02751	Cement Concrete		X								5												
02764	Pavement Joint Sealants		X						X				X										
02780	Detectable Warning Pavers							X					X			X		X					
02811	Landscape Irrigation																						
02831	Chain Link Fences and Gates					X						X	X		X	X		X					
DIVISION 3	**CONCRETE**																						
03100	Concrete Forms and Accessories			X									X					X					
03200	Concrete Reinforcement					X			X									X					
03300	Cast-In-Place Concrete			X				X	X				X		X			X					
03350	Concrete Finishing					X						X	X										
DIVISION 4	**MASONRY**																						
04065	Masonry Mortar and Grout		X	X				X	X							X							
04210	Stone Masonry									X			X			X							
04600	Cast Stone															X		X					
04820	Reinforced Unit Masonry Assemblies	X		X		X			X				X			X		X					
DIVISION 5	**METALS**																						
05312	Steel Roof Deck					X		X	X				X					X					
05400	Cold-Formed Metal Framing					X		X	X	X			X					X					
05500	Metal Fabrication					X							X					X					
DIVISION 6	**WOOD AND PLASTIC**																						
06114	Wood Blocking and Curbing								X				X										
06200	Finish Carpentry					X	X			X			X			X		X					
06410	Custom Cabinets					X	X		X	X			X			X		X					

SECTION NUMBER	DESCRIPTION	Color Charts	Certified Test Reports	Design Data	Inspection Reports	Installer / Subcontractor Qualifications	Manufacturer's Qualifications	Manufacturer's Installation Instructions	Manufacturer's Material Certificates	Mock Ups	Notes	Operations and Maintenance Manuals	Product Data	Product Warranty	Project Record Documents	Samples	Schedule	Shop Drawings	Submittal Number	Date Received Submittal	Date Submitted to A/E	Date Due A/E	Date A/E Returned
DIVISION 7	**THERMAL AND MOISTURE PROTECTION**																						
07190	Water Repellents							X	X				X	X									
07212	Roof Board Insulation							X	X				X										
07213	Batt Insulation								X				X										
07260	Vapor Retardant Barrier							X		X			X										
07413	Sheet Metal Roof/Wall Panels	X		X				X	X		6		X	X	X			X					
07614	Prefabricated Metal Building Roof Curbs																						
07840	Firestopping					X		X	X	X	7		X				X	X					
07900	Joint Sealers	X	X					X	X	X			X	X		X							
DIVISION 8	**DOORS AND WINDOWS**																						
08110	Standard Steel Doors		X			X		X	X				X			X		X					
08115	Standard Steel Frames		X			X		X	X				X			X		X					
08212	Flush Wood Doors							X					X	X		X		X					
08310	Access Doors and Panels							X					X		X	X		X					
08333	Overhead Coiling Doors					X		X				X	X	X		X		X					
08410	Aluminum Storefronts			X		X			X				X	X		X		X					
08520	Aluminum Windows					X	X		X			X	X	X		X		X					
08710	Door Hardware							X			8	X	X	X	X	X	X						
08800	Glazing		X			X			X				X	X		X							
DIVISION 9	**FINISHES**																						
09111	Non-Load-Bearing Metal Framing System							X		X			X					X					
09260	Gypsum Board Assemblies					X		X		X			X			X		X					
09300	Tile					X			X	X		X	X			X		X					
09510	Acoustical Ceilings		X			X				X		X	X			X		X					
09546	Linear Metal Ceilings								X				X	X		X		X					
09650	Resilient Flooring					X			X			X	X			X							
09900	Paints and Coatings							X		X		X	X	X		X							
09910	Painting Fueling System							X					X			X							
DIVISION 10	**SPECIALTIES**																						
10100	Visual Display Boards											X	X	X		X		X					
10170	Plastic Toilet Compartments							X	X			X	X			X		X					
10200	Louvers and Vents		X						X				X	X				X					
10350	Flagpoles											X	X			X		X					
10440	Interior Signage							X								X		X					
10500	Lockers							X				X	X	X		X		X					
10523	Fire Extinguishers & Cabinets							X	X			X	X					X					
10800	Toilet Accessories							X				X	X	X			X						
DIVISION 11	**EQUIPMENT**																						
11132	Projection Screens							X	X			X	X					X					
11140	Fuel Dispensing System		X								9		X					X					
DIVISION 12	**FURNISHINGS**																						
12493	Horizontal Louver Blinds							X		X			X			X		X					
DIVISION 13	**SPECIAL CONSTRUCTION**																						
13120	Pre-Engineered Buildings		X			X	X		X		6, 10		X	X	X	X		X					
DIVISION 14	**CONVEYING SYSTEMS**																						
	Not Used																						

SECTION NUMBER	DESCRIPTION	Color Charts	Certified Test Reports	Design Data	Inspection Reports	Installer / Subcontractor Qualifications	Manufacturer's Qualifications	Manufacturer's Installation Instructions	Manufacturer's Material Certificates	Mock Ups	Notes	Operations and Maintenance Manuals	Product Data	Product Warranty	Project Record Documents	Samples	Schedule	Shop Drawings	Submittal Number	Date Received Submittal	Date Submitted to A/E	Date Due A/E	Date A/E Returned
DIVISION 15	**MECHANICAL**																						
15050	Basic Mechanical Requirements																						
15060	Supports and Anchors																						
15090	Piping Insulation							X					X										
15097	Ductwork Insulation							X					X										
15210	Reciprocating Air Compressors		X									X	X										
15400	Plumbing, Piping, and Assoc. Materials												X										
15490	Closed Loop Water Recycling System												X	X									
15540	Fuel Fired Heaters												X	X									
15761	Ductless Air Conditioning Systems					X		X					X	X									
15767	Heat Pump Air Conditioning Systems							X					X	X									
15810	Ductwork															X		X					
15820	Ductwork Accessories											X	X					X					
15830	Fans							X				X	X										
15850	Air Outlets and Inlets							X					X				X						
15950	Testing, Adjusting, and Balancing										11												
DIVISION 16	**ELECTRICAL**																						
16010	Basic Electrical Requirements																						
16011	Electrical Submittal & Closeout Docs		X					X	X		12, 13, 14	X	X		X			X					
16060	Grounding and Bonding		X										X		X								
16070	Electrical Hangers and Supports							X	X				X					X					
16075	Electrical Identification							X					X										
16123	Building Wire and Cable												X										
16130	Raceway and Boxes							X					X										
16140	Electrical Wiring Devices												X										
16150	Wiring Connections							X					X										
16210	Electrical Utility Services																						
16235	Engine Generators		X								13	X	X	X				X					
16411	Enclosed Switches												X										
16442	Panelboards											X	X		X			X					
16491	Fuses												X		X								
16510	Interior Luminaires												X					X					
16520	Exterior Luminaires												X										
16530	Emergency Lighting												X										
16710	Telecommunication Equip. & Cabling										12		X	X	X								
16722	Gas Monitoring System							X					X										
	NOTES																						

1 - Excavation Protection Plan

2 - Installation Plan, Traffic Control Plan, Emergency Response Procedures

3 - Disinfection Report, Bacteriological Report

4 - Job-Mix Designs

5 - Design Mixes

6 - Certified Engineer's Report

7 - Engineering Judgements

8 - Keys

9 - Authorized Service Representative Information

10 - Surveys

11 - TAB Supervisor's Biographical Data, TAB Report

12 - Proposed Test Procedures, Proposed Labeling and Cable Identification Scheme, Proposed Firestopping System Plans

13 - Manufacturer's Field Reports

14 - Closeout Submittals

SECTION 01400

QUALITY CONTROL REQUIREMENTS

PART 1 - GENERAL

1.1 SECTION INCLUDES

A. Quality control and control of installation

B. Tolerances

C. References

D. Mock-up requirements

E. Testing and inspection services

F. Manufacturers' field services

G. Examination

H. Preparation

1.2 QUALITY CONTROL AND CONTROL OF INSTALLATION

A. Monitor quality control over Suppliers, Manufacturers, products, services, site conditions, and workmanship, to produce Work of specified quality.

B. Comply fully with Manufacturers' instructions, including each step in sequence and secure Manufacturer's certification as certified installer, when applicable.

C. When Manufacturers' instructions conflict with Contract Documents, request clarification from Architect/Engineer before proceeding.

D. Minimum Quantity or Quality Levels: The quantity or quality level shown or specified shall be the minimum provided or performed. The actual installation may comply exactly with the minimum quantity or quality specified, or it may exceed the minimum within reasonable limits. To comply with these requirements, indicated numeric values are minimum or maximum, as appropriate, for the context of requirements. Refer uncertainties to Architect for a decision before proceeding.

E. Comply with specified standards as minimum quality for the Work except where more stringent tolerances, codes, or specified requirements indicate higher standards or more precise workmanship.

F. Perform Work by persons qualified to produce required and specified quality. The Contractor shall comply with applicable local, state, and federal codes and regulations.
   1. Installer Qualifications: A firm or individual experienced in installing, erecting, or assembling work similar in material, design, and extent to that indicated for

this Project, whose work has resulted in construction with a record of successful in-service performance.

2. Manufacturer Qualifications: A firm experienced in manufacturing products or systems similar to those indicated for this Project and with a record of successful in-service performance, as well as sufficient production capacity to produce required units.
3. Fabricator Qualifications: A firm experienced in producing products similar to those indicated for this Project and with a record of successful in-service performance, as well as sufficient production capacity to produce required units.
4. Professional Engineer Qualifications: A professional engineer who is legally qualified to practice in jurisdiction where Project is located and who is experienced in providing engineering services of the kind indicated. Engineering services are defined as those performed for installations of the system, assembly, or product that are similar to those indicated for this Project in material, design, and extent.
5. Testing Agency Qualifications: An NRTL, an NVLAP, or an independent agency with the experience and capability to conduct testing and inspecting indicated, as documented according to ASTM E 548; and with additional qualifications specified in individual Sections; and where required by authorities having jurisdiction, that is acceptable to authorities.
6. NRTL: A nationally recognized testing laboratory according to 29 CFR 1910.7.
7. NVLAP: A testing agency accredited according to NIST's National Voluntary Laboratory Accreditation Program.
8. Factory-Authorized Service Representative Qualifications: An authorized representative of Manufacturer who is trained and approved by Manufacturer to inspect installation of Manufacturer's products that are similar in material, design, and extent to those indicated for this Project.

G. Verify field measurements are as indicated on Shop Drawings or as instructed by Manufacturer.

H. Secure products in place with positive anchorage devices designed and sized to withstand stresses, vibration, physical distortion, or disfigurement.

I. Associated Services: Cooperate with agencies performing required tests, inspections, and similar quality-control services, and provide reasonable auxiliary services as requested. Notify agency sufficiently in advance of operations to permit assignment of personnel. Provide the following:
   1. Access to the Work
   2. Incidental labor and facilities necessary to facilitate tests and inspections
   3. Adequate quantities of representative samples of materials that require testing and inspecting. Assist agency in obtaining samples
   4. Facilities for storage and field curing of test samples
   5. Delivery of samples to testing agencies
   6. Preliminary design mix proposed for use for material mixes that require control by testing agency
   7. Security and protection for samples and for testing and inspecting equipment at Project site

J. Coordination: Coordinate sequence of activities to accommodate required quality-assurance and -control services with a minimum of delay and to avoid necessity of removing and replacing construction to accommodate testing and inspecting.
   1. Schedule times for tests, inspections, obtaining samples, and similar activities.

1.3 TOLERANCES

A. Monitor fabrication and installation tolerance control of products to produce acceptable Work. Do not permit tolerances to accumulate.

B. Comply with Manufacturers' tolerances. When Manufacturers' tolerances conflict with Contract Documents, request clarification from Architect/Engineer before proceeding.

C. Adjust products to appropriate dimensions; position before securing products in place.

1.4 REFERENCES

A. For products or workmanship specified by association, trade, or other consensus standards, comply with requirements of standard, except when more rigid requirements are specified or are required by applicable codes.

B. Conform to reference standard by date of issue current on date for receiving bids, except where specific date is established by code.

C. Obtain copies of standards where required by product specification sections.

D. When specified reference standards conflict with Contract Documents, request clarification from Architect/Engineer before proceeding.

E. Neither contractual relationships, duties, nor responsibilities of parties in Contract nor those of Architect/Engineer shall be altered from Contract Documents by mention or inference otherwise in reference documents.

1.5 MOCK-UP REQUIREMENTS

A. Mockups: Before installing portions of the Work requiring mockups, build mockups for each form of construction and finish required to comply with the following requirements, using materials indicated for the completed Work:
   1. Build mockups in location and of size indicated or, if not indicated, as directed by Architect.
   2. Notify Architect 14 days in advance of dates and times when mockups will be constructed.
   3. Demonstrate the proposed range of aesthetic effects and workmanship.
   4. Obtain Architect's approval of mockups before starting work, fabrication, or construction.
   5. Allow seven days for initial review and each re-review of each mockup.

B. Assemble and erect specified items with specified attachment and anchorage devices, flashings, seals, and finishes.

C. Maintain mockups during construction in an undisturbed condition as a standard for judging the completed Work.

D. Where mock-up has been accepted by Architect/Engineer and is specified in product specification sections to be removed; remove mock-up and clear area when directed to do so by Architect/Engineer.

E. Demolish and remove mockups when directed, unless otherwise indicated.

1.6 TESTING AND INSPECTION SERVICES

A. Refer to Specifications Section 01410 – Testing Laboratory Services.

B. Employ and pay for services of an independent testing agency or laboratory acceptable to Owner to perform specified testing.
   1. Prior to start of Work, submit testing laboratory name, address, and telephone number, and names of full time specialist and responsible officer.
   2. Submit copy of report of laboratory facilities inspection made by Materials Reference Laboratory of National Bureau of Standards during most recent inspection, with memorandum of remedies of deficiencies reported by inspection.

C. The independent firm will perform tests, inspections and other services specified in individual specification sections and as required by Architect/Engineer and / or Owner.
   1. Laboratory: Authorized to operate at Project location.
   2. Laboratory Staff: Maintain full time registered Engineer on staff to review services.
   3. Testing Equipment: Calibrated at reasonable intervals with devices of an accuracy traceable to National Bureau of Standards or accepted values of natural physical constants.

D. Testing, inspections and source quality control may occur on or off project site. Perform off-site testing as required by Architect/Engineer or Owner.

E. The work will be observed by the Architect/Engineer (Owner's Representative) or the Owners field observer and performed to his satisfaction in accordance with the Contract Plans and Specifications. The Owner's representative and Architect/Engineer will decide all questions which may arise as to the quality of acceptability of materials furnished and work performed; the manner of performance and rate of progress of the work; the interpretations of the contract plans and specifications; and the acceptable fulfillment of the contract on the part of the Contractor. The Owner's decisions will be final, and he will have executive authority to enforce and make effective such decisions and orders if the Contractor fails to carry out the work promptly.

F. Reports will be submitted by independent firm to Architect/Engineer, TxDOT Project Manager (2 copies) and Contractor, indicating observations and results of tests and indicating compliance or non-compliance with Contract Documents.

G. Cooperate with independent firm; furnish samples of materials, design mix, equipment, tools, storage, safe access, and assistance by incidental labor as requested.

1. Notify Architect/Engineer and independent firm 48 hours prior to expected time for operations requiring services.
2. Make arrangements with independent firm and pay for additional samples and tests required for Contractor's use.

H. Testing and employment of testing agency or laboratory shall not relieve Contractor of obligation to perform Work in accordance with requirements of Contract Documents.

I. Re-testing or re-inspection required because of non-conformance to specified requirements shall be performed by same independent firm on instructions by Architect/Engineer. Payment for re-testing or re-inspection will be charged to Contractor by deducting testing charges from Contract Sum/Price.

J. Agency Responsibilities:
1. Test samples of mixes submitted by Contractor.
2. Provide qualified personnel at site. Cooperate with Architect/Engineer and Contractor in performance of services.
3. Perform specified sampling and testing of products in accordance with specified standards.
4. Ascertain compliance of materials and mixes with requirements of Contract Documents.
5. Promptly notify Architect/Engineer and Contractor of observed irregularities or non-conformance of Work or products.
6. Perform additional tests required by Architect/Engineer.
7. Attend preconstruction meetings and progress meetings.

K. Agency Reports: After each test, promptly submit two copies of report to Architect/Engineer and to Contractor. When requested by Architect/Engineer, provide interpretation of test results.

L. Limits On Testing Authority:
1. Agency or laboratory may not release, revoke, alter, or enlarge on requirements of Contract Documents.
2. Agency or laboratory may not approve or accept any portion of the Work.
3. Agency or laboratory may not assume duties of Contractor.
4. Agency or laboratory has no authority to stop the Work.

M. Any materials and/or workmanship which are rejected by the Engineer by reason of failure to conform to the requirements of the plans or specifications shall be removed and replaced at Contractor's expense, including testing expense to correct faulty work.

N. Inspections and testing required by law, ordinances, rules and regulations or other public authorities are the responsibility of the Contractor. It is the sole responsibility of the Contractor to call for testing and any work not tested will be automatically rejected

O. Contained in the various specification sections are requirements for certification of products, testing, adjusting, and balancing of equipment and other tests and standards. Testing is required for, but not limited to, the following items of work:

1. Soils-compaction control and hydrocarbon concentrations
2. Cast-in-place concrete
3. Concrete reinforcement
4. Asphalt pavement
5. Cement-Sand Backfill material
6. Crushed limestone base materials
7. Water and sludge
8. Other items in the Scope of Work

1.7 CONTRACTOR'S RESPONSIBILITIES

A. Cooperate with laboratory personnel; provide access to the work area.

B. Provide to laboratory, preliminary representative samples of materials to be tested in required quantities.

C. Furnish labor and equipment:
1. To provide access to the work to be tested.
2. To obtain and handle samples at the site.
3. To facilitate inspections and tests.
4. For laboratory's exclusive use for storage and curing of test samples

1.8 MANUFACTURERS' FIELD SERVICES

A. When specified in individual specification sections, require material or product Suppliers or Manufacturers to provide qualified staff personnel to observe site conditions, conditions of surfaces and installation, quality of workmanship, start-up of equipment, test, adjust and balance of equipment and as applicable, and to initiate instructions when necessary.

B. The Contractor shall provide to the Owner the names of individuals and Manufacturer's representative report of observations and site decisions or instructions given to Applicators or Installers that are supplemental or contrary to Manufacturer's written instructions.

C. Report observations and site decisions or instructions given to Applicators or Installers that are supplemental or contrary to Manufacturers' written instructions.

D. Refer to Section 01330 - SUBMITTAL PROCEDURES, MANUFACTURERS' FIELD REPORTS article.

PART 2 - PRODUCTS (Not Used)

PART 3 - EXECUTION

3.1 EXAMINATION

A. Verify existing site conditions and substrate surfaces are acceptable for subsequent Work. Beginning new Work means acceptance of existing conditions.

B. Verify existing substrate is capable of structural support or attachment of new Work being applied or attached.

C. Examine and verify specific conditions described in individual specification sections.

D. Verify utility services are available, of correct characteristics, and in correct locations.

3.2 PREPARATION

A. Clean substrate surfaces prior to applying next material or substance.

B. Seal cracks or openings of substrate prior to applying next material or substance.

C. Apply Manufacturer required or recommended substrate primer, sealer, or conditioner prior to applying new material or substance in contact or bond.

3.3 TEST AND INSPECTION LOG

A. Prepare a record of tests and inspections. Include the following:
1. Date test or inspection was conducted
2. Description of the Work tested or inspected
3. Date test or inspection results were transmitted to Architect
4. Identification of testing agency or special inspector conducting test or inspection

B. Maintain log at Project site. Post changes and modifications as they occur. Provide access to test and inspection log for Architect's reference during normal working hours.

3.4 REPAIR AND PROTECTION

A. General: On completion of testing, inspecting, sample taking, and similar services, repair damaged construction and restore substrates and finishes.
1. Provide materials and comply with installation requirements specified in other Specification Sections. Restore patched areas and extend restoration into adjoining areas with durable seams that are as invisible as possible.
2. Comply with the Contract Document requirements for Division 1 Section "Cutting and Patching."

B. Protect construction exposed by or for quality-control service activities.

C. Repair and protection are Contractor's responsibility, regardless of the assignment of responsibility for quality-control services.

END OF SECTION

SECTION 01410

TESTING LABORATORY SERVICES

PART 1 - GENERAL

1.1 RELATED DOCUMENTS: Provision established within the General and Supplementary General Conditions of the Contract, Division 1 – General Requirements, and the Drawings are collectively applicable to this Section.

1.2 WORK INCLUDES

A. The testing laboratory shall make all inspections and perform all tests in accordance with the building code, local authorities, state regulations, **TxDOT Test Standards**, and the ASTM specifications and the Contract Documents.

B. Materials and workmanship not meeting the required standards are to be removed and replaced. Replacement and subsequent testing shall be at the expense of the Contractor.

C. Testing, inspection and certifications specified in other sections of these Specifications shall be paid by the Contractor.

D. Inspection by the laboratory shall not relieve the Contractor or Fabricator of his responsibility to furnish materials and workmanship in accordance with the Contract Documents.

1.3 SELECTION AND PAYMENT

A. The General Contractor shall employ and pay for services of an independent testing laboratory, to perform inspection and testing services specified in this section and noted in other specifications sections. The selected independent testing laboratory shall furnish unit or hourly costs for performing work as described in this section. The Owner reserves the right to determine which tests and the quantity of each herein described or elected.

1.4 REFERENCED STANDARDS

A. The latest adopted edition of all standards referenced in the Section shall apply, unless noted otherwise. In case of conflict between these Contract Documents and a referenced standard, the Contract Documents shall govern. In case of conflict between these Contract Documents and the Building Code, the more stringent shall govern.

1.5 QUALITY ASSURANCE

A. Testing Laboratory shall meet the requirements of ASTM E329 and ASTM E543.

B. Testing Laboratory shall be insured against errors and omissions by a professional liability insurance policy having a limit of liability not less than $500,000.

C. Testing Laboratory shall be under the direction of a Registered Engineer licensed in the State of Texas, having at least five years experience in inspection and testing of construction materials.

D. Laboratory staff monitoring concrete work shall be ACI certified inspectors.

E. Laboratory staff performing structural steel inspection shall be currently certified AWS Certified Welding Inspectors (CWI), in accordance with the provisions of AWS QCI, "Standard and Guide for Qualification and Certification of Welding Inspectors". The inspector may be supported by assistant inspectors who may perform specific inspection functions under the supervision of the inspector. Assistant inspectors shall be currently certified AWS Certified Associate Welding Inspectors (CAWI). The work of the assistant inspectors shall be regularly monitored by the inspector, generally on a daily basis.

F. Testing Equipment: Calibrated at reasonable intervals with devices of accuracy traceable to either National Bureau of Standards or accepted values of natural physical constants.

1.6 LABORATORY RESPONSIBILITIES

A. Attend pre-construction meetings and progress meetings when requested, to coordinate work with the Contractor and address quality control issues.

B. Test samples of design mixes submitted by Contractor.

C. Provide qualified personnel at site. Cooperate with Architect/Engineer and Contractor in performance of services.

D. Perform specified inspecting, sampling, and testing of Products in accordance with specified standards.

E. Ascertain compliance of materials and mixes with requirements of Contract Documents.

F. Promptly notify Architect/Engineer and Contractor of observed irregularities or non-conformance of Work or Materials.

G. Perform all inspections and tests in accordance with building code requirements for "Special Inspection" whether or not such inspections are specified in the Contract Documents.

1.7 LABORATORY REPORTS

A. After each inspection and test, promptly submit copies of laboratory reports to Architect, Engineer, Owner and to Contractor.

B. Include:
1. Date issued
2. Project title and number
3. Name of inspector
4. Date and time of sampling or inspection
5. Identification of product and specifications section

6. Location in the Project
7. Type of inspection or test
8. Date of test
9. Results of tests
10. Conformance with Contract Documents

1.8 LIMITS ON TESTING LABORATORY AUTHORITY

A. Laboratory may not release, revoke, alter, or enlarge the requirements of the Contract Documents.

B. Laboratory may not approve or accept any portion of the Work, except where such approval is specifically called for in these specifications.

C. Laboratory may not assume any duties of Contractor.

D. Laboratory has no authority to stop the Work.

1.9 CONTRACTOR RESPONSIBILITIES

A. See technical sections of these specifications for specific requirements.

B. Advise laboratory sufficiently in advance of construction operations to allow laboratory to complete any required checks or tests and to assign personnel for field inspection and testing as specified.

C. Provide facilities for safe storage and proper curing of concrete test samples on project site for the first 24 hours and also for subsequent field curing as required by ASTM specifications C31.

D. Provide incidental labor and equipment as required to assist laboratory personnel in obtaining and handling samples at the site and in accessing work for inspection.

E. Furnish concrete mix designs, in accordance with ACI 301, Section 3.9, made by an independent testing laboratory or qualified concrete supplier. Where mix designs are required, the laboratory shall be selected and paid by the Contractor.

F. Provide current welder certifications for each welder to be employed.

G. Furnish fabrication and erection inspection of all welds in accordance with the AWS D1.1, Chapter 6.

H. Pre-qualification of all welding procedures to be used in executing the work.

PART 2 - PRODUCTS (Not Used)

PART 3 - EXECUTION

3.1 FILLING AND BACKFILLING

A. The Contractor shall make available to the laboratory, adequate samples of each fill and backfill material from the proposed sources of supply not less than 10 days prior to the start of the work.

B. Laboratory shall analyze samples as required to provide a soil description and to determine compliance with quality requirements. Perform the following tests:
   1. Test for liquid limit in accordance with ASTM D423.
   2. Test for plastic limit of soils and plasticity index of soils in accordance with ASTM D424.
   3. Tests for moisture density relations of soil in accordance with ASTM D698 or D1557, as applicable.

C. Furnish a report for each individual test and state whether sample conforms to specified requirements or reasons for nonconformance.

D. Inspect under slab drainage material and placement for compliance with specified gradation, quality and compaction.

E. Make in-place compaction test for moisture content, moisture-density relationship, and density of fill material after compaction to determine that backfill materials have been compacted to the specified density. Number of tests shall be as follows:
   1. One test for each 5,000 square feet of area of each lift placed under floor slab. Stagger test locations in each lift from those in the previous lift. Perform a minimum of three tests for each lift.
   2. One test for each 100 linear feet, or portion thereof, of each lift placed against foundation walls, with locations staggered from those in the previous lift.
   3. One test of each lift placed below any isolated footing, and every 100 linear feet under continuous footings, with locations taken on a different side from that in the lift below.

3.2 CONCRETE REINFORCING STEEL AND EMBEDDED METAL ASSEMBLIES

A. Inspect all concrete reinforcing steel prior to placing of concrete for compliance with the Contract Documents and approved shop drawings. All instances of noncompliance shall be immediately brought to the attention of the Contractor for correction. If uncorrected by the Contractor, they shall be listed in the report.

B. Observe and report on the following:
   1. Number and size of bars
   2. Bending and lengths of bars
   3. Splicing
   4. Clearance to forms including chair heights
   5. Clearance between bars or spacing
   6. Rust, form oil, and other contaminations
   7. Grade of Steel
   8. Securing, tying and chairing of bars

9. Excessive congestion of reinforcing steel
10. Installation of anchor bolts and placement of concrete around anchor bolts
11. Fabrication and installation of embedded metal assemblies, including visual inspection of all welds
12. Visually inspect studs and deformed bar anchors on embedded assemblies for compliance with Contract Documents.

C. Provide a qualified, experienced inspector to inspect reinforcing steel. Inspector shall have a minimum of three years experience inspecting reinforcing steel in project of similar size.

3.3 CONCRETE INSPECTION AND TESTING

A. Secure composite samples of concrete at the jobsite in accordance with ASTM C172.

B. Mold and cure three specimens from each sample in accordance with ASTM C31. The test cylinders shall be stored in the field 24 hours and then carefully transported to the laboratory and cured in accordance with ASTM C31.

C. Test specimens in accordance with ASTM C39. Two specimens shall be tested at 28 days for acceptance and one shall be tested at 7 days for information.

D. Make one strength test (three cylinders or beams) for each 75 cubic yards or fraction thereof, of each mix design placed in one day.

E. Make one slump test for each set of cylinders following the procedural requirements of ASTM C143 and ASTM C172. Make additional slump tests whenever the consistency of the concrete appears to vary. Do not permit placement of concrete having measured slump outside the limits given on the drawings, except when approved by the Architect. Slump tests corresponding to samples from which strength tests are made shall be reported with the strength test results. Other slump tests need not be reported.

F. Determine total air content of air entrained normal-weight concrete sample for each strength test in accordance with ASTM C231.

G. Determine temperature of concrete sample for each strength test.

H. Monitor the addition of water at the jobsite and the length of time the concrete is allowed to remain in the truck before placement. Report any significant deviation from the approved mix design to the Architect, the Contractor, and the concrete supplier.

I. Observe the placing of all concrete, except non structural slabs-on-grade and site work. Observe and report on placing method, consolidation, cold joints, and length of drop and displacement of reinforcing. Report deficiencies to the Contractor immediately for corrective action. Inspections may be reduced to a periodic basis when all procedures have been deemed satisfactory by the laboratory.

J. The testing laboratory shall certify each delivery ticket indicating class of concrete delivered (or placed), amount of water added and the time at which the cement and

aggregate was dispensed into the truck, and the time at which concrete was discharged from the truck.

K. Evaluation and Acceptance:
1. If the measured slump or air content of air entrained concrete falls outside the specified limits, a check test shall be made immediately on another portion of the same sample. In the event of a second failure, the concrete shall be considered to have failed to meet the requirements of the specifications and shall be rejected.
2. The strength level of the concrete will be considered satisfactory if the averages of all sets of three consecutive strength test results are equal to or exceed the specified strength and no individual test result (average of two cylinders) is below the specified strength by more than 500 psi.
3. Completed concrete work will be accepted when the requirements of "Specifications for Structural Concrete for Building," ACI 301, Chapter 18 have been met.

L. Comply with ACI 311, "Guide For Concrete Inspection" and "ACI Manual of Concrete Inspection" (SP-2).

M. Inspect the application of curing compound and monitor all curing conditions to assure compliance with Specification requirements. Report curing deficiencies to the Contractor immediately and submit a report to the Architect.

3.4 MASONRY

A. Compressive Test for Mortar:
1. Secure composite samples of mortar at the jobsite in accordance with ASTM C780.
2. Mold and cure three cube specimens in accordance with ASTM C109 and C780. Supervise the curing and protection provided by the Contractor for test specimens in the field and the transportation from the field to the laboratory. The specimens shall be stored in the field 24 hours and then be moved to the laboratory and cured in accordance with ASTM C780.
3. Test specimens in accordance with ASTM C780. Two specimens shall be tested at 28 days for acceptance and one shall be tested at 7 days for information.
4. Make one strength test (three cubes) for each 2,000 square feet of wall area.

3.5 STRUCTURAL STEEL

A. Inspect all structural steel during fabrication and during the after erection for conformance with Contract Documents and shop drawings, as requested by the Owner.

B. Shop Inspection:
1. Examination of steel for straightness and alignment
2. Examination of all fabricated pieces for compliance with Contract Documents and shop drawings
3. Visual examination of all shop welding
4. Ultrasonic testing of all full penetration welds
5. Examination of galvanizing
6. Examination of installation of shop welded shear studs

7. Examination of shop painting

C. Field Inspection:
1. Proper erection of all pieces
2. Proper installation of all bolts, including the checking of calibration of impact wrenches used with high strength bolts
3. Plumbness of structure and proper bracing
4. Field Painting
5. Visual examination of all field welding
6. Ultrasonic testing of all penetration welds
7. Installation of field welded shear studs

D. Qualification of Welders: Fabricator and erector shall provide the testing laboratory with names of welders to be employed in the work, together with certification that welders have passed qualification tests within the last year using procedures specified in the AWS D1.1. The Owner shall verify all welders' qualifications.

E. Inspection of shop and field welding shall be "verification inspection", in accordance with Section 6 of AWS D1.1 on an "as needed" basis, and as follows:
1. Visually inspect the welding of all shop fabricated members and note the location of all cover plates, connectors, bearing stiffeners, splices, and fillet welds for proper return around ends and check for seams, folds, and delaminations.
2. Ultrasonically test all penetration welds in accordance with ASTM E164.
3. Inspect surfaces to be welded. Surface preparations, fit-up and cleanliness of surface shall be noted.
4. The welding inspector shall be present during alignment and fit-up of members being welded, and shall check for correct surface preparation of root openings, sound weld metal and proper penetration in the root pass. Where weld has not penetrated completely, the inspector shall order the joint to be chipped down to sound metal, or gouged out and rewelded. Root passes shall be thoroughly inspected for cracks. All cracks shall be gouged out and rewelded to two inches beyond each end of crack.
5. The inspector shall check that all welds have been marked with the welders' symbol. The inspector shall make the welds requiring repairs and shall make a reinspection. The inspector shall maintain a written record of all welds. Work completed and inspected shall receive an identification mark by the inspector.
6. The testing laboratory shall advise the Owner and the Architect of any shop and/or field conditions which, in his opinion, may require further tests and examination by means other than those specified. Such further tests and examinations shall be performed as authorized by the Owner and the Architect.
7. The Owner reserves the right to use ultrasonic or radiographic inspection to verify the adequacy of all welds. Testing procedures and acceptance criteria shall be as specified in AWS D1.1.

F. Inspection of bolted construction shall be in accordance with AISC "Specification for Structural Steel Buildings" and as follows:
1. All bolts shall be visually inspected to endure that the plies have been brought into snug contact.
2. High strength bolting shall be inspected in accordance with Section 9 of the AISC "Specifications for Structural Joints Using ASTM A325 or A490 Bolts."

3. For all high strength bolts, unless specifically noted on the Drawings to require only “snug-tight” installation, the inspector shall observe the required jobsite testing and calibration, and shall confirm that the procedure to be used provides the required tension.

3.6 METAL ROOF DECK

A. Field inspection shall consist of the following:
   1. Checking types, gauges, and finishes for conformance with the Contract Documents and shop drawings
   2. Examination for proper erection of all metal deck, including fastenings at supports and sidelaps, reinforcing of holes, and miscellaneous deck supports
   3. Certification of all welders
   4. Visual inspection of at least 25% of all welds

END OF SECTION

SECTION 01420

REFERENCES

PART 1 - GENERAL

1.1 RELATED DOCUMENTS

A. Drawings and general provisions of the Contract, including General and Supplementary Conditions and other Division 1 Specification Sections, apply to this Section.

1.2 DEFINITIONS

A. General: Basic Contract definitions are included in the Conditions of the Contract.

B. "Reviewed": When used to convey Architect's action on Contractor's submittals, applications, and requests, "Reviewed" is limited to Architect's duties and responsibilities as stated in the Conditions of the Contract.

C. "Directed": A command or instruction by Architect. Other terms including "requested," "authorized," "selected," "required," and "permitted" have the same meaning as "directed."

D. "Indicated": Requirements expressed by graphic representations or in written form on Drawings, in Specifications, and in other Contract Documents. Other terms including "shown," "noted," "scheduled," and "specified" have the same meaning as "indicated."

E. "Regulations": Laws, ordinances, statutes, and lawful orders issued by authorities having jurisdiction, and rules, conventions, and agreements within the construction industry that control performance of the Work.

F. "Furnish": Supply and deliver to Project site, ready for unloading, unpacking, assembly, installation, and similar operations.

G. "Install": Operations at Project site including unloading, temporarily storing, unpacking, assembling, erecting, placing, anchoring, applying, working to dimension, finishing, curing, protecting, cleaning, and similar operations.

H. "Provide": Furnish and install, complete and ready for the intended use.

I. "Project Site": Space available for performing construction activities. The extent of Project site is shown on Drawings and may or may not be identical with the description of the land on which Project is to be built.

1.3 INDUSTRY STANDARDS

A. Applicability of Standards: Unless the Contract Documents include more stringent requirements, applicable construction industry standards have the same force and effect as if bound or copied directly into the Contract Documents to the extent referenced. Such standards are made a part of the Contract Documents by reference.

B. Publication Dates: Comply with standards in effect as of date of the Contract Documents, unless otherwise indicated.

1.4 ABBREVIATIONS AND ACRONYMS

A. Industry Organizations: Where abbreviations and acronyms are used in Specifications or other Contract Documents, they shall mean the recognized name of the entities indicated in Gale Research's "Encyclopedia of Associations" or in Columbia Books' "National Trade & Professional Associations of the U.S."

B. Code Agencies: Where abbreviations and acronyms are used in Specifications or other Contract Documents, they shall mean the recognized name of the entities in the following list. Names, telephone numbers, and Web-site addresses are subject to change and are believed to be accurate and up-to-date as of the date of the Contract Documents.

ICBO	International Conference of Building Officials (See ICC)	
ICBO ES	ICBO Evaluation Service, Inc. (See ICC-ES)	
ICC	International Code Council (Formerly: CABO - Council of American Building Officials) www.iccsafe.org	(703) 931-4533
ICC-ES	ICC Evaluation Service, Inc. www.icc-es.org	(800) 423-6587 (562) 699-0543

C. Federal Government Agencies: Where abbreviations and acronyms are used in Specifications or other Contract Documents, they shall mean the recognized name of the entities in the following list. Names, telephone numbers, and Web-site addresses are subject to change and are believed to be accurate and up-to-date as of the date of the Contract Documents.

CPSC	Consumer Product Safety Commission www.cpsc.gov	(800) 638-2772 (301) 504-6816
DOC	Department of Commerce www.commerce.gov	(202) 482-2000
DOE	Department of Energy www.eren.doe.gov	(202) 586-9220
EPA	Environmental Protection Agency www.epa.gov	(202) 272-0167
FCC	Federal Communications Commission www.fcc.gov	(888) 225-5322

GSA	General Services Administration www.gsa.gov	(800) 488-3111 (202) 501-1888
NCHRP	National Cooperative Highway Research Program (See TRB)	
NIST	National Institute of Standards and Technology www.nist.gov	(301) 975-6478
OSHA	Occupational Safety & Health Administration www.osha.gov	(800) 321-6742 (202) 693-1999
RUS	Rural Utilities Service (See USDA)	(202) 720-9540
TRB	Transportation Research Board www.nas.edu/trb	(202) 334-2934

PART 2 - PRODUCTS (Not Used)

PART 3 - EXECUTION (Not Used)

END OF SECTION

SECTION 01500

TEMPORARY FACILITIES AND CONTROLS

PART 1 - GENERAL

1.1 SECTION INCLUDES

A. Temporary Utilities:
   1. Temporary electricity
   2. Temporary lighting for construction purposes
   3. Temporary heating
   4. Temporary cooling
   5. Temporary ventilation
   6. Telephone service
   7. Facsimile service
   8. Temporary water service
   9. Temporary sanitary facilities

B. Construction Facilities:
   1. Field offices and sheds
   2. Vehicular access
   3. Parking
   4. Progress cleaning and waste removal
   5. Project identification
   6. Traffic regulation

C. Temporary Controls:
   1. Barriers
   2. Enclosures and fencing
   3. Security
   4. Water control
   5. Dust control
   6. Erosion and sediment control
   7. Noise control
   8. Pest control
   9. Pollution control
   10. Rodent control

D. Removal of utilities, facilities, and controls.

1.2 USE CHARGES

A. General: Cost or use charges for temporary facilities shall be included in the Contract Sum. Allow other entities to use temporary services and facilities without cost, including, but not limited to, Architect, testing agencies, and authorities having jurisdiction.

B. Sewer Service: Pay sewer service use charges for sewer usage by all entities for construction operations.

C. Water Service: Pay water service use charges for water used by all entities for construction operations.

D. Electric Power Service: Pay electric power service use charges for electricity used by all entities for construction operations.

1.3 SUBMITTALS

A. Site Plan: Show temporary facilities, utility hookups, staging areas, and parking areas for construction personnel.

1.4 TEMPORARY ELECTRICITY

A. Provide and pay for power service required from utility source as needed for construction operation.
   1. Exercise measures to conserve energy.
   2. Provide and install temporary overhead power from Utility Company.
   3. Set temporary meter and switchgear at start of construction.
   4. Specified switchgear shall not be used to construct building until building is in “dry-in" stage.

B. Provide power outlets, with branch wiring and distribution boxes located as required for construction operations. Provide flexible power cords as required for portable construction tools and equipment.

C. Permanent convenience receptacles may not be utilized during construction.

1.5 TEMPORARY LIGHTING FOR CONSTRUCTION PURPOSES

A. Provide and maintain lighting for construction operations. Provide temporary lighting with local switching that provides adequate illumination for construction operations, observations, inspections, and traffic conditions.

B. Provide and maintain lighting to exterior staging and storage areas after dark for security purposes. Install and operate temporary lighting that fulfills security and protection requirements without operating entire system.

C. Provide branch wiring from power source to distribution boxes with lighting conductors, pigtails, and lamps for specified lighting levels.

D. Maintain lighting and provide routine repairs.

E. Permanent building lighting may be utilized during construction.

1.6 TEMPORARY HEATING

A. Provide and pay for heating devices and heat as needed to maintain specified conditions for construction operations

B. Prior to operation of permanent equipment for temporary heating purposes, verify installation is approved for operation, equipment is lubricated and filters are in place. Provide and pay for operation, maintenance, and regular replacement of filters and worn or consumed parts. Owner must authorize use of permanent system for temporary purposes.

C. Maintain minimum ambient temperature of 50 degrees F in areas where construction is in progress, unless indicated otherwise in product sections.

1.7 TEMPORARY COOLING

A. Provide and pay for cooling devices and cooling as needed to maintain specified conditions for construction operations.

B. Enclose building prior to activating temporary cooling in accordance with Enclosures article in this section.

C. Prior to operation of permanent equipment for temporary cooling purposes, verify installation is approved for operation, equipment is lubricated and filters are in place. Provide and pay for operation, maintenance, and regular replacement of filters and worn or consumed parts. Owner must authorize use of permanent system for temporary purposes.

D. Maintain maximum ambient temperature of 80 degrees F in areas where construction is in progress, unless indicated otherwise in specifications.

1.8 TEMPORARY VENTILATION

A. Ventilate enclosed areas to achieve curing of materials, to dissipate humidity, and to prevent accumulation of dust, fumes, vapors, or gases. Owner must authorize use of permanent system for temporary purposes.

1.9 TELEPHONE SERVICE

A. Provide, maintain, and pay for telephone service to field office at time of project mobilization.

B. Contractor shall provide, maintain, and pay for telephone service for field operations at time of project mobilization. No calls shall be made using Owner's equipment. In the event of a telephone charge to an Owner’s telephone, the Contractor shall be responsible for reimbursing the Owner for long distance charges. Reimbursement shall be made prior to the Owner releasing monies on payment draws.

C. Electronic Communication Service: Provide temporary electronic communication service, including electronic mail, in common-use facilities.

1.10 FACSIMILE SERVICE

A. Provide, maintain and pay for facsimile service and dedicated telephone line to field office at time of project mobilization.

1.11 TEMPORARY WATER SERVICE

A. Provide and pay for suitable quality water service as needed to maintain specified conditions for construction operations.
   1. Exercise measures to conserve energy.

B. Extend branch piping with outlets located so water is available by hoses with threaded connections. Provide temporary pipe insulation to prevent freezing.

1.12 TEMPORARY SANITARY FACILITIES

A. Provide and maintain required facilities and enclosures. Existing facility use is not permitted. Provide facilities at time of project mobilization.

B. Provide temporary toilets, wash facilities, and drinking water for use of construction personnel. Comply with authorities having jurisdiction for type, number, location, operation, and maintenance of fixtures and facilities.

C. At end of construction, return existing facilities used for construction operations to same or better condition as original condition.

1.13 FIELD OFFICES AND SHEDS

A. Office: Weather tight, with lighting, electrical outlets, heating, cooling and ventilating equipment, and equipped with sturdy furniture and drawing display table.

B. Provide space for Project meetings, with table and chairs to accommodate 10 persons.

C. Locate offices and sheds minimum distance of 30 feet from existing and new structures. In the event the Contractor furnishes a field office, the office shall be located as directed by the Owner, within the limits of construction. No use of Owners equipment will be permitted.

D. Construction: Portable or mobile buildings, or buildings constructed with floors raised above ground, securely fixed to foundations with steps and landings at entrance doors.
   1. Construction: Structurally sound, secure, weather tight enclosures for office and storage spaces. Maintain during progress of Work; remove when no longer needed.
   2. Temperature Transmission Resistance of Floors, Walls, and Ceilings: Compatible with occupancy and storage requirements.
   3. Exterior Materials: Weather resistant, finished color acceptable to Owner.

4. Fire Extinguishers: Appropriate type fire extinguisher at each office and each storage area.

E. Storage Areas And Sheds: Size to storage requirements for products of individual Sections, allowing for access and orderly provision for maintenance and for inspection of products to requirements of Section 01600.
   1. Store combustible materials apart from building.

F. Preparation: Fill and grade sites for temporary structures sloped for drainage away from buildings.

G. Installation:
   1. Install office spaces ready for occupancy.
   2. Employee Residential Occupancy: Not allowed on Owner's property.

H. Removal: At completion of Work remove buildings, foundations, utility services, and debris. Restore areas.

1.14 VEHICULAR ACCESS

A. Construct temporary all-weather access roads from public thoroughfares to serve construction area, of width and load bearing capacity to accommodate unimpeded traffic for construction purposes.

B. Construct temporary culverts to span low areas and allow unimpeded drainage.

C. Extend and relocate vehicular access as Work progress requires, provide detours as necessary for unimpeded traffic flow.

D. Location approved by Owner.

E. Provide unimpeded access for emergency vehicles. Maintain 20 feet wide driveways with turning space between and around combustible materials.

F. Provide and maintain access to fire hydrants and control valves free of obstructions.

G. Provide means of removing mud from vehicle wheels before entering streets.

H. Do not use existing on-site roads for construction traffic.

1.15 PARKING

A. Provide temporary surface parking areas to accommodate construction personnel.

B. Locate as approved by Owner.

C. Use of existing on-site streets and driveways used for construction traffic is not permitted. Tracked vehicles not allowed on paved areas.

D. Use of existing parking facilities used by construction personnel is not permitted.

E. Do not allow heavy vehicles or construction equipment in parking areas.

F. Do not allow vehicle parking on existing pavement.

G. Permanent Pavements And Parking Facilities:
1. Prior to Substantial Completion, bases for permanent roads and parking areas may be used for construction traffic.
2. Avoid traffic loading beyond paving design capacity. Tracked vehicles not allowed.

H. Maintenance:
1. Maintain traffic and parking areas in sound condition free of excavated material, construction equipment, products, mud, snow, and ice.
2. Maintain existing paved areas used for construction; promptly repair breaks, potholes, low areas, standing water, and other deficiencies, to maintain paving and drainage in original, or specified, condition.

I. Mud from Site Vehicles: Provide means of removing mud from vehicle wheels before entering streets.

1.16 PROGRESS CLEANING AND WASTE REMOVAL

A. Maintain areas free of waste materials, debris, and rubbish. Maintain site in clean and orderly condition.

B. Remove debris and rubbish from pipe chases, plenums, attics, crawl spaces, and other closed or remote spaces, prior to enclosing spaces.

C. Broom and vacuum clean interior areas prior to start of surface finishing, and continue cleaning to eliminate dust.

D. Waste Disposal Facilities: Provide waste-collection containers in sizes adequate to handle waste from construction operations. Comply with requirements of authorities having jurisdiction. Collect and remove waste materials, debris, and rubbish from site weekly and dispose off-site.
1. Remove waste upon owner representative’s request.

1.17 PROJECT IDENTIFICATION

A. Project Identification Sign:
1. One painted sign, 32 sq ft area, bottom 6 feet above ground
2. Content: Name of Prime Contractor and major Subcontractors
3. Graphic Design, Colors, Style of Lettering: Reviewed by Owner
4. No other signs are allowed without Owner permission except those required by law

B. Design sign and structure to withstand building code wind velocity.

C. Sign Painter: Experienced as professional sign painter.

D. Finishes, Painting: Adequate to withstand weathering, fading, and chipping for duration of construction.

E. Show content, layout, lettering, and color.

F. Sign Materials:
1. Structure and Framing: New wood, structurally adequate
2. Sign Surfaces: Exterior grade plywood
3. Rough Hardware: Galvanized
4. Paint and Primers: Exterior quality

G. Installation:
1. Erect at designated location.
2. Erect supports and framing on secure foundation, rigidly braced and framed to resist wind loadings.
3. Install sign surface plumb and level, with butt joints. Anchor securely.
4. Paint exposed surfaces of sign, supports, and framing.

H. Maintenance: Maintain signs and supports clean, repair deterioration and damage.

I. Removal: Remove signs, framing, supports, and foundations at completion of Project and restore area.

1.18 TRAFFIC REGULATION

A. Signs, Signals, And Devices:
1. Post Mounted and Wall Mounted Traffic Control and Informational Signs
2. Traffic Cones and Drums, Flares and Lights: As approved by authority having jurisdiction
3. Flag person Equipment: As required by authority having jurisdiction

B. Flag Persons: Provide trained and equipped flag persons to regulate traffic when construction operations or traffic encroach on public traffic lanes.

C. Flares and Lights: Use flares and lights during hours of low visibility to delineate traffic lanes and to guide traffic.

D. Haul Routes:
1. Consult with authority having jurisdiction, establish public thoroughfares to be used for haul routes and site access.
2. Confine construction traffic to designated haul routes.

E. Traffic Signs:
1. Provide signs at approaches to site and on site, at crossroads, detours, parking areas, and elsewhere as needed to direct construction and affected public traffic.
2. Relocate as Work progresses, to maintain effective traffic control.

F. Removal:
   1. Remove equipment and devices when no longer required.
   2. Repair damage caused by installation.
   3. Remove post settings.

1.19 BARRIERS

A. Provide barriers to prevent unauthorized entry to construction areas, to allow for Owner's use of site, and to protect existing facilities and adjacent properties from damage from construction operations.

B. Provide barricades required by authorities having jurisdiction for public rights-of-way.

C. Provide protection for plants designated to remain. Replace damaged plants.

D. Protect non-owned vehicular traffic, stored materials, site, and structures from damage.

1.20 ENCLOSURES AND FENCING

A. Construction: Commercial grade chain link fence.

B. Provide 6 feet high fence around construction site; equip with vehicular gates with locks.

1.21 SECURITY

A. Security Program:
   1. Protect Work from theft, vandalism, and unauthorized entry.
   2. Initiate program in coordination with Owner's existing security system at project mobilization.
   3. Maintain program throughout construction period until Owner occupancy.

B. Entry Control:
   1. Restrict entrance of persons and vehicles into Project site.

C. Personnel Identification:
   1. Provide identification badge to each person authorized to enter premises.
   2. Maintain list of accredited persons, submit copy to Owner on request.
   3. Require return of badges at expiration of their employment on the Work.

D. Security Enclosure and Lockup: Install substantial temporary enclosure around partially completed areas of construction. Provide lockable entrances to prevent unauthorized entrance, vandalism, theft, and similar violations of security.

E. Temporary Fire Protection: Install and maintain temporary fire-protection facilities of types needed to protect against reasonably predictable and controllable fire losses. Comply with NFPA 241.
   1. Prohibit smoking in construction areas.

2. Supervise welding operations, combustion-type temporary heating units, and similar sources of fire ignition according to requirements of authorities having jurisdiction.
3. Develop and supervise an overall fire-prevention and -protection program for personnel at Project site. Review needs with local fire department and establish procedures to be followed. Instruct personnel in methods and procedures. Post warnings and information.

F. Restrictions:
1. Do no work on days indicated in Owner-Contractor Agreement.

1.22 WATER CONTROL

A. Grade site to drain. Maintain excavations free of water. Provide, operate, and maintain pumping equipment.

B. Protect site from puddling or running water. Provide water barriers as required to protect site from soil erosion.

1.23 DUST CONTROL

A. Execute Work by methods to minimize raising dust from construction operations.

B. Provide positive means to prevent air-borne dust from dispersing into atmosphere.

1.24 EROSION AND SEDIMENT CONTROL

A. Plan and execute construction by methods to control surface drainage from cuts and fills, from borrow and waste disposal areas. Prevent erosion and sedimentation.

B. Minimize surface area of bare soil exposed at one time.

C. Provide temporary measures including berms, dikes, and drains, and other devices to prevent water flow.

D. Construct fill and waste areas by selective placement to avoid erosive surface silts or clays.

E. Periodically inspect earthwork to detect evidence of erosion and sedimentation; promptly apply corrective measures.

1.25 PEST CONTROL

A. Provide methods, means, and facilities to prevent pests and insects from damaging the Work.

1.26 POLLUTION CONTROL

A. Provide methods, means, and facilities to prevent contamination of soil, water, and atmosphere from discharge of noxious, toxic substances, and pollutants produced by construction operations.

B. Comply with pollution and environmental control requirements of authorities having jurisdiction.

1.27 RODENT CONTROL

A. Provide methods, means, and facilities to prevent rodents from accessing or invading premises.

1.28 REMOVAL OF UTILITIES, FACILITIES, AND CONTROLS

A. Remove temporary utilities, equipment, facilities, materials, prior to Substantial Completion inspection.

B. Remove underground installations, Grade site as indicated on Drawings.

C. Clean and repair damage caused by installation or use of temporary work.

PART 2 - PRODUCTS (Not Used)

PART 3 - EXECUTION

3.1 OPERATION, TERMINATION, AND REMOVAL

A. Supervision: Enforce strict discipline in use of temporary facilities. To minimize waste and abuse, limit availability of temporary facilities to essential and intended uses.

B. Maintenance: Maintain facilities in good operating condition until removal.
1. Maintain operation of temporary enclosures, heating, cooling, humidity control, ventilation, and similar facilities on a 24-hour basis where required to achieve indicated results and to avoid possibility of damage.

C. Temporary Facility Changeover: Do not change over from using temporary security and protection facilities to permanent facilities until Substantial Completion.

D. Termination and Removal: Remove each temporary facility when need for its service has ended, when it has been replaced by authorized use of a permanent facility, or no later than Substantial Completion. Complete or, if necessary, restore permanent construction that may have been delayed because of interference with temporary facility. Repair damaged Work, clean exposed surfaces, and replace construction that cannot be satisfactorily repaired.

1. Materials and facilities that constitute temporary facilities are property of Contractor.
2. Remove temporary paving not intended for or acceptable for integration into permanent paving. Where area is intended for landscape development, remove soil and aggregate fill that do not comply with requirements for fill or subsoil. Remove materials contaminated with road oil, asphalt and other petrochemical compounds, and other substances that might impair growth of plant materials or lawns. Repair or replace street paving, curbs, and sidewalks at temporary entrances, as required by authorities having jurisdiction.
3. At Substantial Completion, clean and renovate permanent facilities used during construction period. Comply with final cleaning requirements specified in Division 1 Section "Closeout Procedures."

END OF SECTION

SECTION 01600

PRODUCT REQUIREMENTS

PART 1 - GENERAL

1.1 RELATED DOCUMENTS

A. Drawings and general provisions of the Contract, including General and Supplementary Conditions and other Division 1 Specification Sections, apply to this Section.

1.2 SUMMARY

A. This Section includes administrative and procedural requirements for selection of products for use in Project; product delivery, storage, and handling; manufacturers' standard warranties on products; special warranties; product substitutions; and comparable products.

B. Related Sections include the following:
1. Division 1 Section "References" for applicable industry standards for products specified
2. Division 1 Section "Closeout Procedures" for submitting warranties for Contract closeout
3. Divisions 2 through 16 Sections for specific requirements for warranties on products and installations specified to be warranted

1.3 DEFINITIONS

A. Products: Items purchased for incorporating into the Work, whether purchased for Project or taken from previously purchased stock. The term "product" includes the terms "material," "equipment," "system," and terms of similar intent.
1. Named Products: Items identified by manufacturer's product name, including make or model number or other designation shown or listed in manufacturer's published product literature that is current as of date of the Contract Documents.
2. New Products: Items that have not previously been incorporated into another project or facility, except that products consisting of recycled-content materials are allowed, unless explicitly stated otherwise. Products salvaged or recycled from other projects are not considered new products.
3. Comparable Product: Product that is demonstrated and approved through submittal process, or where indicated as a product substitution, to have the indicated qualities related to type, function, dimension, in-service performance, physical properties, appearance, and other characteristics that equal or exceed those of specified product.

B. Substitutions: Changes in products, materials, equipment, and methods of construction from those required by the Contract Documents and proposed by Contractor.

C. Basis-of-Design Product Specification: Where a specific manufacturer's product is named and accompanied by the words "basis of design," including make or model number or other designation, to establish the significant qualities related to type, function, di-

mension, in-service performance, physical properties, appearance, and other characteristics for purposes of evaluating comparable products of other named manufacturers.

1.4 SUBMITTALS

A. Substitution Requests: Submit three copies of each request for consideration. Identify product or fabrication or installation method to be replaced. Include Specification Section number and title and Drawing numbers and titles.

1. Substitution Request Form: Use form provided by Owner, reference Section 01630 Substitutions and Product Options.
2. Documentation: Show compliance with requirements for substitutions and the following, as applicable:
    a. Statement indicating why specified material or product cannot be provided
    b. Coordination information, including a list of changes or modifications needed to other parts of the Work and to construction performed by Owner and separate Contractors, that will be necessary to accommodate proposed substitution
    c. Detailed comparison of significant qualities of proposed substitution with those of the Work specified. Significant qualities may include attributes such as performance, weight, size, durability, visual effect, and specific features and requirements indicated
    d. Product Data, including drawings and descriptions of products and fabrication and installation procedures
    e. Samples, where applicable or requested
    f. List of similar installations for completed projects with project names and addresses and names and addresses of architects and owners
    g. Material test reports from a qualified testing agency indicating and interpreting test results for compliance with requirements indicated
    h. Research/evaluation reports evidencing compliance with building code in effect for Project, from a model code organization acceptable to authorities having jurisdiction
    i. Detailed comparison of Contractor's Construction Schedule using proposed substitution with products specified for the Work, including effect on the overall Contract Time. If specified product or method of construction cannot be provided within the Contract Time, include letter from manufacturer, on manufacturer's letterhead, stating lack of availability or delays in delivery
    j. Cost information, including a proposal of change, if any, in the Contract Sum
    k. Contractor's certification that proposed substitution complies with requirements in the Contract Documents and is appropriate for applications indicated
    l. Contractor's waiver of rights to additional payment or time that may subsequently become necessary because of failure of proposed substitution to produce indicated results
3. Architect's Action: If necessary, Architect will request additional information or documentation for evaluation within 7 days of receipt of a request for substitution. Architect will notify Contractor of acceptance or rejection of proposed sub-

stitution within 15 days of receipt of request, or 7 days of receipt of additional information or documentation, whichever is later.
a. Form of Acceptance: Change Order.
b. Use product specified if Architect cannot make a decision on use of a proposed substitution within time allocated.

B. Comparable Product Requests: Submit three copies of each request for consideration. Identify product or fabrication or installation method to be replaced. Include Specification Section number and title and Drawing numbers and titles.
1. Architect's Action: If necessary, Architect will request additional information or documentation for evaluation within one week of receipt of a comparable product request. Architect will notify Contractor of approval or rejection of proposed comparable product request within 15 days of receipt of request, or 7 days of receipt of additional information or documentation, whichever is later.
a. Form of Approval: As specified in Division 1 Section "Submittal Procedures."
b. Use product specified if Architect cannot make a decision on use of a comparable product request within time allocated.

C. Basis-of-Design Product Specification Submittal: Comply with requirements in Division 1 Section "Submittal Procedures." Show compliance with requirements.

1.5 QUALITY ASSURANCE

A. Compatibility of Options: If Contractor is given option of selecting between two or more products for use on Project, product selected shall be compatible with products previously selected, even if previously selected products were also options.

1.6 PRODUCT DELIVERY, STORAGE, AND HANDLING

A. Deliver, store, and handle products using means and methods that will prevent damage, deterioration, and loss, including theft. Comply with manufacturer's written instructions.

B. Delivery and Handling:
1. Schedule delivery to minimize long-term storage at Project site and to prevent overcrowding of construction spaces.
2. Coordinate delivery with installation time to ensure minimum holding time for items that are flammable, hazardous, easily damaged, or sensitive to deterioration, theft, and other losses.
3. Deliver products to Project site in an undamaged condition in manufacturer's original sealed container or other packaging system, complete with labels and instructions for handling, storing, unpacking, protecting, and installing.
4. Inspect products on delivery to ensure compliance with the Contract Documents and to ensure that products are undamaged and properly protected.

C. Storage:
1. Store products to allow for inspection and measurement of quantity or counting of units.
2. Store materials in a manner that will not endanger Project structure.

3. Store products that are subject to damage by the elements, under cover in a weathertight enclosure above ground, with ventilation adequate to prevent condensation.
4. Store cementitious products and materials on elevated platforms.
5. Store foam plastic from exposure to sunlight, except to extent necessary for period of installation and concealment.
6. Comply with product manufacturer's written instructions for temperature, humidity, ventilation, and weather-protection requirements for storage.
7. Protect stored products from damage and liquids from freezing.
8. Provide a secure location and enclosure at Project site for storage of materials and equipment by Owner's construction forces. Coordinate location with Owner.

1.7 PRODUCT WARRANTIES

A. Warranties specified in other Sections shall be in addition to, and run concurrent with, other warranties required by the Contract Documents. Manufacturer's disclaimers and limitations on product warranties do not relieve Contractor of obligations under requirements of the Contract Documents.
   1. Manufacturer's Warranty: Preprinted written warranty published by individual manufacturer for a particular product and specifically endorsed by manufacturer to Owner.
   2. Special Warranty: Written warranty required by or incorporated into the Contract Documents, either to extend time limit provided by manufacturer's warranty or to provide more rights for Owner.

B. Special Warranties: Prepare a written document that contains appropriate terms and identification, ready for execution. Submit a draft for approval before final execution.
   1. Manufacturer's Standard Form: Modified to include Project-specific information and properly executed.
   2. Refer to Divisions 2 through 16 Sections for specific content requirements and particular requirements for submitting special warranties.

C. Submittal Time: Comply with requirements in Division 1 Section "Closeout Procedures."

PART 2 - PRODUCTS

2.1 PRODUCT SELECTION PROCEDURES

A. General Product Requirements: Provide products that comply with the Contract Documents, that are undamaged and, unless otherwise indicated, that are new at time of installation.
   1. Provide products complete with accessories, trim, finish, fasteners, and other items needed for a complete installation and indicated use and effect.
   2. Standard Products: If available, and unless custom products or nonstandard options are specified, provide standard products of types that have been produced and used successfully in similar situations on other projects.
   3. Owner reserves the right to limit selection to products with warranties not in conflict with requirements of the Contract Documents.

4. Where products are accompanied by the term "as selected," Architect will make selection.
5. Where products are accompanied by the term "match sample," sample to be matched is Architect's.
6. Descriptive, performance, and reference standard requirements in the Specifications establish "salient characteristics" of products.
7. Or Equal: Where products are specified by name and accompanied by the term "or equal" or "or approved equal" or "or approved," comply with provisions in Part 2 "Comparable Products" Article to obtain approval for use of an unnamed product.

B. Product Selection Procedures:
1. Products: Where Specifications include a list of names of both products and manufacturers, provide one of the products listed that complies with requirements.
2. Manufacturers: Where Specifications include a list of manufacturers' names, provide a product by one of the manufacturers listed that complies with requirements.
3. Available Products: Where Specifications include a list of names of both products and manufacturers, provide one of the products listed, or an unnamed product, that complies with requirements. Comply with provisions in Part 2 "Comparable Products" Article for consideration of an unnamed product.
4. Available Manufacturers: Where Specifications include a list of manufacturers, provide a product by one of the manufacturers listed, or an unnamed manufacturer, that complies with requirements. Comply with provisions in Part 2 "Comparable Products" Article for consideration of an unnamed product.
5. Product Options: Where Specifications indicate that sizes, profiles, and dimensional requirements on Drawings are based on a specific product or system, provide the specified product or system. Comply with provisions in Part 2 "Product Substitutions" Article for consideration of an unnamed product or system.
6. Basis-of-Design Product: Where Specifications name a product and include a list of manufacturers, provide the specified product or a comparable product by one of the other named manufacturers. Drawings and Specifications indicate sizes, profiles, dimensions, and other characteristics that are based on the product named. Comply with provisions in Part 2 "Comparable Products" Article for consideration of an unnamed product by the other named manufacturers.
7. Visual Matching Specifications: Where Specifications include the phrase “as selected from manufacturer’s colors, patterns, textures” or a similar phrase, select a product (and manufacturer) that complies with other specified requirements.
    a. Standard Range: Where specifications include the phrase “standard range of colors, patterns, textures” or similar phrase, Architect will select color pattern, or texture from manufacturer’s product line that does not include premium items.
    b. Full Range: Where Specifications include the phrase “full range of colors, patterns, textures” or similar phrase, Architect will select color, pattern or texture form manufacturer’s product line that include both standard and premium items.

2.2 PRODUCT SUBSTITUTIONS

A. Reference Section 01630 – Substitutions and Product Options.

2.3 COMPARABLE PRODUCTS

A. Conditions: Architect will consider Contractor's request for comparable product when the following conditions are satisfied. If the following conditions are not satisfied, Architect will return requests without action, except to record noncompliance with these requirements:
   1. Evidence that the proposed product does not require extensive revisions to the Contract Documents, that it is consistent with the Contract Documents and will produce the indicated results, and that it is compatible with other portions of the Work
   2. Detailed comparison of significant qualities of proposed product with those named in the Specifications. Significant qualities include attributes such as performance, weight, size, durability, visual effect, and specific features and requirements indicated
   3. Evidence that proposed product provides specified warranty
   4. List of similar installations for completed projects with project names and addresses and names and addresses of architects and owners, if requested
   5. Samples, if requested

PART 3 - EXECUTION (Not Used)

END OF SECTION

SECTION 01630

SUBSTITUTIONS AND PRODUCT OPTIONS

PART 1 - GENERAL

1.1 PRODUCT LIST

A. Within 30 days after date of Contract, submit to Architect 5 copies of complete list of products and materials which are proposed for installation.

B. Prepare list on basis of each Specification section.

C. For products specified under reference standards, include with listing of each product:
1. Name and address of Manufacturer
2. Trade name
3. Model or catalog designation
4. Manufacturer's data, including performance and test data, reference standards

1.2 CONTRACTOR'S OPTIONS

A. For products specified only by reference standards, select any product meeting standards, by any Manufacturer.

B. For products specified by naming several products or Manufacturers, select any product and Manufacturer named.

C. For products specified by naming only one product and Manufacturer, there is no option, unless a substitution is approved as specified below.

1.3 SUBSTITUTIONS

A. During Bidding, Architect will consider written requests from prime Bidders for substitutions, received at least 7 days prior to Bid Date; requests received after that time will not be considered. Approval of proposed substitutions will be set forth in an Addendum or letter of approval. Requests for substitutions shall include data listed below.

B. Within 30 days after date of Contract, Architect will consider formal requests from Contractor for substitutions of products in place of those specified. No request for substitutions will be considered after this date.

C. Submit 2 copies of request for substitution. Include in substitution:
1. Data substantiating compliance of proposed substitution with Contract documents.
2. For products:
a. Product identification, including Manufacturer’s name and address

b. Manufacturer's literature, including product description, performance and test data and reference standards
c. Samples, if applicable
d. Name and address of similar projects on which product was used and date of installation

3. For construction methods:
   a. Detailed written descriptions of proposed method
   b. Complete drawings illustrating methods or revisions
4. Itemized comparison of proposed substitution with product or method specified.
5. Data relating to changes in construction schedule.

D. In making request for substitution, Bidder/Contractor represents:
1. He has personally investigated proposed product or method and determined that it is equal or superior in all respects to that specified.
2. He will provide same guarantee for substitution as for product or method specified.
3. He will coordinate installation of accepted substitution into work, making such changes as may be required for work to be complete in all respects.
4. He waives all claims for additional costs related to substitution which subsequently becomes apparent.

E. Substitutions will not be considered if:
1. They are indicated or implied on show drawings or product data submittals without formal request as submitted in accordance with Article 1.03 of this Section.
2. Acceptance will require substantial revision of Contract Documents.

PART 2 - PRODUCTS

2.1 PRODUCT SUBSTITUTIONS

A. Timing: Architect will consider requests for substitution if received within 30 days after the Notice to Proceed. Requests received after that time may be considered or rejected at discretion of Architect.

B. Conditions: Architect will consider Contractor's request for substitution when the following conditions are satisfied. If the following conditions are not satisfied, Architect will return requests without action, except to record noncompliance with these requirements:
1. Requested substitution offers Owner a substantial advantage in cost, time, energy conservation, or other considerations, after deducting additional responsibilities Owner must assume. Owner's additional responsibilities may include compensation to Architect for redesign and evaluation services, increased cost of other construction by Owner, and similar considerations.
2. Requested substitution does not require extensive revisions to the Contract Documents.

3. Requested substitution is consistent with the Contract Documents and will produce indicated results.
4. Substitution request is fully documented and properly submitted.
5. Requested substitution will not adversely affect Contractor's Construction Schedule.
6. Requested substitution has received necessary approvals of authorities having jurisdiction.
7. Requested substitution is compatible with other portions of the Work.
8. Requested substitution has been coordinated with other portions of the Work.
9. Requested substitution provides specified warranty.

SUBSTITUTION REQUEST

PROJECT: _____ APW PROJECT NO.: _____

TO: James Tate
MNT Division
150 E. Riverside Dr.
Austin, TX 78704

FROM (CONTRACTOR/BIDDER):
_____
_____

CONTRACTOR (BIDDER) HEREBY REQUESTS ACCEPTANCE OF THE FOLLOWING PRODUCT OR SYSTEMS AS A SUBSTITUTION IN ACCORD WITH PROVISIONS OF DIVISION ONE OF THE SPECIFICATIONS:

1. SPECIFIED PRODUCT OR SYSTEM:
   Substitution request for (Generic Description): _____

   Specification Section No.: _____ Article(s) _____ Paragraph (s) _____

2. SUPPORTING DATA:
   Product data for proposed substitution is attached (description of product, reference standards, performance and test data).

   Sample is attached Sample will be sent if requested

3. QUALITY COMPARISON:

	SPECIFIED PRODUCT	SUBSTITUTION
Name brand:	_____	_____
Catalog No.	_____	_____
Manufacturer:	_____	_____
Vendor:	_____	_____
Significant Variations:	_____	_____
	_____	_____

Maintenance Service Available: _____ Yes _____ No

Spare Part Source: _____

4. PREVIOUS INSTALLATIONS:
   Identification of similar projects on which proposed substitution was used:

   Project: _____ Architect: _____

   Address: _____ Owner: _____

   _____ Date Installed: _____

   _____

5. REASON FOR NOT GIVING PRIORITY TO SPECIFIED ITEMS:

   _____

   _____

6. EFFECT OF SUBSTITUTION:
   Proposed substitution affects other parts of Work: _____ No _____Yes (If yes, explain)

_____

_____

Substitution changes Contract Time: _____ No _____ Yes Add/Deduct _____days.

Substitution requires dimensional revision or redesign of structure or M & E Work:

_____ No _____ Yes (If yes, attach compete data)

Saving or credit to Owner, if any, for accepting substitution: $_____.

Extra cost to Owner, if any, for accepting substitution: $_____.

7. CONTRACTOR'S (BIDDER'S) STATEMENT OF CONFORMANCE OF PROPOSED SUBSTITUTION TO CONTRACT REQUIREMENT:

I/we have investigated the proposed substitution.

I/we:

___ believe that it is equal or superior in all respects to specified product, except as stated above.
___ will provide the same warranty as specified for specified product.
___ have included complete cost data and implications of the substitution.
___ will pay redesign and special inspection costs caused by the use of this product.
___ will pay additional costs to other contractors caused by the substitution.
___ will coordinate the incorporation of the proposed substitution in the Work.
____ will modify other parts of the work as may be needed, to make all parts of the work complete and functioning.
___ waive future claims for added cost to Contract caused by the substitution.

Contractor (Bidder): _____ Date: _____

By: _____.

Answer all questions and complete all blanks - use "N/A" if not applicable.

ARCHITECT REVIEW AND ACTION

___ Resubmit substitution request:

___ Provide more information in following categories.

_____

___ Sign Contractor's (Bidder's) Statement of Conformance.

___ Substitution accepted.

___ Substitution is accepted with the following comments.

_____

_____

___ Substitution not accepted.

___ Substitution Request received too late.

_____ _____
James Tate, R.A. Date
TxDOT

END OF SECTION

SECTION 01700

EXECUTION REQUIREMENTS

PART 1 - GENERAL

1.1 SECTION INCLUDES

A. Installation

B. Owner-Installed Products

C. Progress Cleaning

D. Final cleaning

E. Starting of systems

F. Demonstration and instructions

G. Testing, adjusting and balancing

H. Protecting installed construction

I. Operation and maintenance data

J. Manual for materials and finishes

K. Manual for equipment and systems

L. Spare parts and maintenance products

M. Product warranties and product bonds

1.2 INSTALLATION

A. General: Locate the Work and components of the Work accurately, in correct alignment and elevation, as indicated.
   1. Make vertical work plumb and make horizontal work level.
   2. Where space is limited, install components to maximize space available for maintenance and ease of removal for replacement.
   3. Conceal pipes, ducts, and wiring in finished areas, unless otherwise indicated.
   4. Maintain minimum headroom clearance of 8 feet in spaces without a suspended ceiling.

B. Comply with Manufacturer's written instructions and recommendations for installing products in applications indicated.

C. Install products at the time and under conditions that will ensure the best possible results. Maintain conditions required for product performance until Substantial Completion.

D. Conduct construction operations so no part of the Work is subjected to damaging operations or loading in excess of that expected during normal conditions of occupancy.

E. Tools and Equipment: Do not use tools or equipment that produce harmful noise levels.

F. Templates: Obtain and distribute to the parties involved templates for work specified to be factory prepared and field installed. Check Shop Drawings of other work to confirm that adequate provisions are made for locating and installing products to comply with indicated requirements.

G. Anchors and Fasteners: Provide anchors and fasteners as required to anchor each component securely in place, accurately located and aligned with other portions of the Work.
   1. Mounting Heights: Where mounting heights are not indicated, mount components at heights directed by Architect.
   2. Allow for building movement, including thermal expansion and contraction.
   3. Coordinate installation of anchorages. Furnish setting drawings, templates, and directions for installing anchorages, including sleeves, concrete inserts, anchor bolts, and items with integral anchors, that are to be embedded in concrete or masonry. Deliver such items to Project site in time for installation.

H. Joints: Make joints of uniform width. Where joint locations in exposed work are not indicated, arrange joints for the best visual effect. Fit exposed connections together to form hairline joints.

I. Hazardous Materials: Use products, cleaners, and installation materials that are not considered hazardous.

1.3 OWNER-INSTALLED PRODUCTS

A. Site Access: Provide access to Project site for Owner's construction forces.

B. Coordination: Coordinate construction and operations of the Work with work performed by Owner's construction forces.
   1. Construction Schedule: Inform Owner of Contractor's preferred construction schedule for Owner's portion of the Work. Adjust construction schedule based on a mutually agreeable timetable. Notify Owner if changes to schedule are required due to differences in actual construction progress.
   2. Preinstallation Conferences: Include Owner's construction forces at preinstallation conferences covering portions of the Work that are to receive Owner's work. Attend preinstallation conferences conducted by Owner's construction forces if portions of the Work depend on Owner's construction.

1.4 PROGRESS CLEANING

A. General: Clean Project site and work areas daily, including common areas. Coordinate progress cleaning for joint-use areas where more than one installer has worked. Enforce requirements strictly. Dispose of materials lawfully.
   1. Comply with requirements in NFPA 241 for removal of combustible waste materials and debris.
   2. Do not hold materials more than 7 days during normal weather or 3 days if the temperature is expected to rise above 80 deg F.
   3. Containerize hazardous and unsanitary waste materials separately from other waste. Mark containers appropriately and dispose of legally, according to regulations.

B. Site: Maintain Project site free of waste materials and debris.

C. Work Areas: Clean areas where work is in progress to the level of cleanliness necessary for proper execution of the Work.
   1. Remove liquid spills promptly.
   2. Where dust would impair proper execution of the Work, broom-clean or vacuum the entire work area, as appropriate.

D. Installed Work: Keep installed work clean. Clean installed surfaces according to written instructions of Manufacturer or fabricator of product installed, using only cleaning materials specifically recommended. If specific cleaning materials are not recommended, use cleaning materials that are not hazardous to health or property and that will not damage exposed surfaces.

E. Concealed Spaces: Remove debris from concealed spaces before enclosing the space.

F. Exposed Surfaces in Finished Areas: Clean exposed surfaces and protect as necessary to ensure freedom from damage and deterioration at time of Substantial Completion.

G. Waste Disposal: Burying or burning waste materials on-site will not be permitted. Washing waste materials down sewers or into waterways will not be permitted.

H. During handling and installation, clean and protect construction in progress and adjoining materials already in place. Apply protective covering where required to ensure protection from damage or deterioration at Substantial Completion.

I. Clean and provide maintenance on completed construction as frequently as necessary through the remainder of the construction period. Adjust and lubricate operable components to ensure operability without damaging effects.

J. Limiting Exposures: Supervise construction operations to assure that no part of the construction, completed or in progress, is subject to harmful, dangerous, damaging, or otherwise deleterious exposure during the construction period.

1.5 FINAL CLEANING

A. Execute final cleaning prior to final project assessment.

B. General: Provide final cleaning. Conduct cleaning and waste-removal operations to comply with local laws and ordinances and Federal and local environmental and antipollution regulations.

C. Cleaning: Employ experienced workers or professional cleaners for final cleaning. Clean each surface or unit to condition expected in an average commercial building cleaning and maintenance program. Comply with Manufacturer's written instructions.

1. Complete the following cleaning operations before requesting inspection for certification of Final Completion for entire Project or for a portion of Project:
    a. Clean Project site, yard, and grounds, in areas disturbed by construction activities, including landscape development areas, of rubbish, waste material, litter, and other foreign substances.
    b. Sweep paved areas broom clean. Remove petrochemical spills, stains, and other foreign deposits.
    c. Rake grounds that are neither planted nor paved to a smooth, even-textured surface.
    d. Remove tools, construction equipment, machinery, and surplus material from Project site.
    e. Remove snow and ice to provide safe access to building.
    f. Clean exposed exterior and interior hard-surfaced finishes to a dirt-free condition, free of stains, films, and similar foreign substances. Avoid disturbing natural weathering of exterior surfaces. Restore reflective surfaces to their original condition.
    g. Remove debris and surface dust from limited access spaces, including roofs, plenums, shafts, trenches, equipment vaults, manholes, attics, and similar spaces.
    h. Sweep concrete floors broom clean in unoccupied spaces.
    i. Vacuum carpet and similar soft surfaces, removing debris and excess nap; shampoo if visible soil or stains remain.
    j. Clean transparent materials, including mirrors and glass in doors and windows. Remove glazing compounds and other noticeable, vision-obscuring materials. Replace chipped or broken glass and other damaged transparent materials. Polish mirrors and glass, taking care not to scratch surfaces.
    k. Remove labels that are not permanent.
    l. Touch up and otherwise repair and restore marred, exposed finishes and surfaces. Replace finishes and surfaces that cannot be satisfactorily repaired or restored or that already show evidence of repair or restoration.
        1) Do not paint over "UL" and similar labels, including mechanical and electrical nameplates.
    m. Wipe surfaces of mechanical and electrical equipment and similar equipment. Remove excess lubrication, paint and mortar droppings, and other foreign substances.
    n. Replace parts subject to unusual operating conditions.

o. Clean plumbing fixtures to a sanitary condition, free of stains, including stains resulting from water exposure.
p. Replace disposable air filters and clean permanent air filters. Clean exposed surfaces of diffusers, registers, and grills.
q. Clean ducts, blowers, and coils if units were operated without filters during construction.
r. Clean light fixtures, lamps, globes, and reflectors to function with full efficiency. Replace burned-out bulbs, and those noticeably dimmed by hours of use, and defective and noisy starters in fluorescent and mercury vapor fixtures to comply with requirements for new fixtures.
s. Leave Project clean and ready for occupancy.

D. Comply with safety standards for cleaning. Do not burn waste materials. Do not bury debris or excess materials on Owner's property. Do not discharge volatile, harmful, or dangerous materials into drainage systems. Remove waste materials from Project site and dispose of lawfully.

1.6 STARTING OF SYSTEMS

A. Coordinate schedule for start-up of various equipment and systems.

B. Notify Architect/Engineer and Owner 14 days prior to start-up of each item.

C. Verify each piece of equipment or system has been checked for proper lubrication, drive rotation, belt tension, control sequence, and for conditions which may cause damage.

D. Verify tests, meter readings, and specified electrical characteristics agree with those required by equipment or system Manufacturer.

E. Verify wiring and support components for equipment are complete and tested.

F. Execute start-up under supervision of applicable Manufacturer's representative and Contractors' personnel in accordance with Manufacturers' instructions.

G. Submit a written report in accordance with Section 01300 that equipment or system has been properly installed and is functioning correctly.

1.7 DEMONSTRATION AND INSTRUCTIONS

A. Demonstrate operation and maintenance of products to Owner's personnel two weeks prior to date of Substantial Completion.

B. Demonstrate Project equipment and instructed by qualified representative who is knowledgeable about the Project.

C. For equipment or systems requiring seasonal operation, perform demonstration for other season within six months.

D. Utilize operation and maintenance manuals as basis for instruction. Review contents of manual with Owner's personnel in detail to explain all aspects of operation and maintenance.

E. Demonstrate start-up, operation, control, adjustment, trouble-shooting, servicing, maintenance, and shutdown of each item of equipment at agreed time, at equipment location.

F. Prepare and insert additional data in operations and maintenance manuals when need for additional data becomes apparent during instruction.

G. Required instruction time for each item of equipment and system is specified in individual sections.

1.8 TESTING, ADJUSTING AND BALANCING

A. Refer to Mechanical and Electrical Specifications for specific requirements.
   1. Reports will be submitted by independent firm to Architect/Engineer indicating observations and results of tests and indicating compliance or non-compliance with requirements of Contract Documents.

B. Adjust Door Hardware for proper operation and ADA compliance.

C. Refer to Division 1 through Division 16 for specific requirements.

1.9 PROTECTING INSTALLED CONSTRUCTION

A. Comply with Manufacturer's written instructions for temperature and relative humidity.

B. Protect installed Work and provide special protection where specified in individual specification sections.

C. Provide temporary and removable protection for installed products. Control activity in immediate work area to prevent damage.

D. Provide protective coverings at walls, projections, jambs, sills, and soffits of openings.

E. Protect finished floors, stairs, and other surfaces from traffic, dirt, wear, damage, or movement of heavy objects, by protecting with durable sheet materials.

F. Prohibit traffic or storage upon waterproofed or roofed surfaces. When traffic or activity is necessary, obtain recommendations for protection from waterproofing or roofing material Manufacturer.

G. Prohibit traffic from landscaped areas.

1.10 PROJECT RECORD DOCUMENTS

A. Maintain on site one set of the following record documents; record actual revisions to the Work:
   1. Drawings
   2. Specifications
   3. Addenda
   4. Change Orders and other modifications to the Contract
   5. Reviewed Shop Drawings, Product Data, and Samples
   6. Manufacturer's instruction for assembly, installation, and adjusting
   7. Manufacturer's certificates
   8. Reviewed submittals

B. Ensure entries are complete and accurate, enabling future reference by Owner.

C. Store record documents separate from documents used for construction.

D. Label and file Record Documents in accordance with Section number listings in Table of Contents of this Project Specifications Manual. Label each document "PROJECT RECORD" in neat, large, printed letters.

E. Record information concurrent with construction progress, not less than weekly.

F. Specifications: Legibly mark and record at each product section description of actual products installed, including the following: Provide felt tip marking pens, maintaining separate colors for each major system, for recording information.
   1. Manufacturer's name and product model and number
   2. Product substitutions or alternates utilized
   3. Changes made by Addenda and modifications

G. Record Drawings and Shop Drawings: Legibly mark each item to record actual construction including:
   1. Measured depths of foundations in relation to finish floor datum
   2. Measured horizontal and vertical locations of underground utilities and appurtenances, referenced to permanent surface improvements
   3. Measured locations of internal utilities and appurtenances concealed in construction, referenced to visible and accessible features of the Work
   4. Field changes of dimension and detail
   5. Details not on original Contract drawings
   6. Changes made by Addenda and modifications
   7. Details not on original Contract Drawings
   8. References to related shop drawings and Modifications

H. Submit documents to Architect/Engineer with claim for final Application for Payment.
   1. At Contract closeout, deliver to Owner:
      a. Two copies of:
         1) Record drawings
         2) Record specifications manual

I. Transmit with cover letter in duplicate, listing:
   1. Date
   2. Project title and number
   3. Contractor's name, address, and telephone number
   4. Number and title of each Record Document
   5. Signature of Contractor or authorized representative

1.11 OPERATION AND MAINTENANCE DATA

A. Submit documents to Architect/Engineer with claim for final Application for Payment.
   1. At Contract closeout, deliver to Owner:
      a. Two copies of:
         1) Operations and maintenance manuals for all mechanical equipment
         2) All warranties
         3) Reviewed submittals bound together in 3-ring notebooks

B. Submit data bound in 8-1/2 x 11 inch text pages, three D side ring binders with durable plastic covers.

C. Prepare binder cover with printed title "OPERATION AND MAINTENANCE INSTRUCTIONS", title of project, and subject matter of binder when multiple binders are required.

D. Internally subdivide binder contents with permanent page dividers, logically organized as described below; with tab titling clearly printed under reinforced laminated plastic tabs.

E. Drawings: Provide with reinforced punched binder tab. Bind in with text; fold larger drawings to size of text pages.

F. Contents: Prepare Table of Contents for each volume, with each product or system description identified, typed on white paper, in three parts as follows:
   1. Part 1: Directory, listing names, addresses, and telephone numbers of Architect/Engineer, Contractor, Subcontractors, and major equipment Suppliers.
   2. Part 2: Operation and maintenance instructions, arranged by system and subdivided by specification section. For each category, identify names, addresses, and telephone numbers of Subcontractors and Suppliers. Identify the following:
      a. Significant design criteria
      b. List of equipment
      c. Parts list for each component
      d. Operating instructions
      e. Maintenance instructions for equipment and systems
      f. Maintenance instructions for special finishes, including recommended cleaning methods and materials, and special precautions identifying detrimental agents
   3. Part 3: Project documents and certificates, including the following:
      a. Shop drawings and product data
      b. Air and water balance reports

c. Certificates
d. Originals of warranties and bonds

1.12 MANUAL FOR MATERIALS AND FINISHES

A. Submit two copies of preliminary draft or proposed formats and outlines of contents before start of Work. Architect/Engineer will review draft and return one copy with comments.

B. For equipment, or component parts of equipment put into service during construction and operated by Owner, submit documents within ten days after acceptance.

C. Submit one copy of completed volumes 15 days prior to final inspection. Draft copy be reviewed and returned, with Architect/Engineer comments. Revise content of document sets as required prior to final submission.

D. Submit two sets of revised final volumes in final form within 10 days after final inspection.

E. Building Products, Applied Materials, and Finishes: Include product data, with catalog number, size, composition, and color and texture designations. Include information for re-ordering custom manufactured products.

F. Instructions for Care and Maintenance: Include Manufacturer's recommendations for cleaning agents and methods, precautions against detrimental agents and methods, and recommended schedule for cleaning and maintenance.

G. Moisture Protection and Weather Exposed Products: Include product data listing applicable reference standards, chemical composition, and details of installation. Include recommendations for inspections, maintenance, and repair.

H. Additional Requirements: As specified in individual product specification sections.

I. Include listing in Table of Contents for design data, with tabbed fly sheet and space for insertion of data.

1.13 MANUAL FOR EQUIPMENT AND SYSTEMS

A. Submit two copies of preliminary draft or proposed formats and outlines of contents before start of Work. Architect/Engineer will review draft and return one copy with comments.

B. For equipment, or component parts of equipment put into service during construction and operated by Owner, submit documents within ten days after acceptance.

C. Submit one copy of completed volumes 15 days prior to final inspection. Draft copy be reviewed and returned after final inspection, with Architect/Engineer comments. Revise content of document sets as required prior to final submission.

D. Submit two sets of revised final volumes in final form within 10 days after final inspection.

E. Each Item of Equipment and Each System: Include description of unit or system, and component parts. Identify function, normal operating characteristics, and limiting conditions. Include performance curves, with engineering data and tests, and complete nomenclature and model number of replaceable parts.

F. Panelboard Circuit Directories: Provide electrical service characteristics, controls, and communications; typed.

G. Include color coded wiring diagrams as installed.

H. Operating Procedures: Include start-up, break-in, and routine normal operating instructions and sequences. Include regulation, control, stopping, shut-down, and emergency instructions. Include summer, winter, and special operating instructions.

I. Maintenance Requirements: Include routine procedures and guide for preventative maintenance and trouble shooting; disassembly, repair, and reassembly instructions; and alignment, adjusting, balancing, and checking instructions.

J. Include servicing and lubrication schedule, and list of lubricants required.

K. Include Manufacturer's printed operation and maintenance instructions.

L. Include sequence of operation by controls Manufacturer.

M. Include original Manufacturer's parts list, illustrations, assembly drawings, and diagrams required for maintenance.

N. Include control diagrams by controls Manufacturer as installed.

O. Include Contractor's coordination drawings, with color coded piping diagrams as installed.

P. Include charts of valve tag numbers, with location and function of each valve, keyed to flow and control diagrams.

Q. Include list of original Manufacturer's spare parts, current prices, and recommended quantities to be maintained in storage.

R. Include test and balancing reports as specified in Section 01400.

S. Additional Requirements: As specified in individual product specification sections.

T. Include listing in Table of Contents for design data, with tabbed dividers and space for insertion of data.

1.14 SPARE PARTS AND MAINTENANCE PRODUCTS

A. Furnish spare parts, maintenance, and extra products in quantities specified in individual specification sections.

B. Deliver to Project site and place in location as directed by Owner; obtain receipt prior to final payment.

1.15 PRODUCT WARRANTIES AND PRODUCT BONDS

A. Obtain warranties and bonds executed in duplicate by responsible Subcontractors, Suppliers, and Manufacturers, within ten days after completion of applicable item of work.

B. Execute and assemble transferable warranty documents and bonds from Subcontractors, Suppliers, and Manufacturers.

C. Verify documents are in proper form, contain full information, and are notarized.

D. Co-execute submittals when required.

E. Include Table of Contents and assemble in three D side ring binder with durable plastic cover.

F. Submit prior to final Application for Payment.

G. Time Of Submittals:
1. For equipment or component parts of equipment put into service during construction with Owner's permission, submit documents within ten days after acceptance.
2. Make other submittals within ten days after Date of Substantial Completion, prior to final Application for Payment.
3. For items of Work for which acceptance is delayed beyond Date of Substantial Completion, submit within ten days after acceptance, listing date of acceptance as beginning of warranty or bond period.

PART 2 - PRODUCTS

2.1 CLEANING AGENTS

A. Use cleaning materials and agents recommended by Manufacturer or fabricator of the surface to be cleaned. Do not use cleaning agents that are potentially hazardous to health or property or that might damage finished surfaces.

PART 3 - EXECUTION (Not Used)

END OF SECTION

SECTION 01710

PROJECT CLOSEOUT

PART 1 - GENERAL

1.1 SECTION INCLUDES

A. Closeout procedures

B. Final cleaning

C. Starting of systems

D. Demonstration and instructions

E. Testing, adjusting and balancing

F. Protecting installed construction

1.2 SUBSTANTIAL COMPLETION: Substantial Completion is defined as essentially 99.9% complete with only cosmetic touch-ups left to be done.

A. Documents required for Substantial Completion:
1. Project record documents
2. Operation and maintenance data
3. Manual for materials and finishes
4. Manual for equipment and systems
5. Spare parts and maintenance products
6. Product warranties and product bonds
7. Maintenance service

B. Submit written certification that Contract Documents have been reviewed, Work has been inspected, and that Work is complete in accordance with Contract Documents and ready for Architect/Engineer's review.

C. Provide submittals to Architect/Engineer required by authorities having jurisdiction.

1.3 FINAL CLEANING

A. Execute final cleaning prior at Substantial Completion.

B. Clean interior and exterior glass, surfaces exposed to view; remove temporary labels, stains and foreign substances, polish transparent and glossy surfaces, vacuum carpeted and soft surfaces.

C. Clean equipment and fixtures to sanitary condition with cleaning materials appropriate to surface and material being cleaned.

D. Replace filters of operating equipment.

E. Clean debris from roofs, gutters, downspouts, and drainage systems.

F. Clean site; sweep paved areas, rake clean landscaped surfaces.

G. Remove waste and surplus materials, rubbish, and construction facilities from site.

1.4 STARTING OF SYSTEMS

A. Coordinate schedule for start-up of various equipment and systems.

B. Notify Architect/Engineer seven days prior to start-up of each item.

C. Verify each piece of equipment or system has been checked for proper lubrication, drive rotation, belt tension, control sequence, and for conditions which may cause damage.

D. Verify tests, meter readings, and specified electrical characteristics agree with those required by equipment or system Manufacturer.

E. Verify wiring and support components for equipment are complete and tested.

F. Execute start-up under supervision of applicable Manufacturer's representative and Contractors' personnel in accordance with Manufacturers' instructions.

G. When specified in individual specification Sections, require Manufacturer to provide authorized representative to be present at site to inspect, check, and approve equipment or system installation prior to start-up, and to supervise placing equipment or system in operation.

H. Submit a written report in accordance with Section 01330 that equipment or system has been properly installed and is functioning correctly.

1.5 DEMONSTRATION AND INSTRUCTIONS

A. Demonstrate operation and maintenance of products using a video recording device for future reference to Owner's personnel two weeks prior to date of Substantial Completion.

B. Demonstrate Project equipment and instruct in classroom environment using a video recording device for future reference located at the site and instructed by qualified Manufacturer's representative who is knowledgeable about the Project.

C. For equipment or systems requiring seasonal operation, perform demonstration for other season within six months.

D. Utilize operation and maintenance manuals as basis for instruction. Review contents of manual with Owner's personnel in detail to explain all aspects of operation and maintenance.

E. Demonstrate start-up, operation, control, adjustment, trouble-shooting, servicing, maintenance, and shutdown of each item of equipment at agreed time at equipment designated location.

F. Prepare and insert additional data in operations and maintenance manuals when need for additional data becomes apparent during instruction.

G. Required instruction time for each item of equipment and system is specified in individual sections.

1.6 TESTING, ADJUSTING AND BALANCING

A. Independent firm will perform services specified in Division 15 and other Sections.

B. Reports will be submitted by independent firm to Architect/Engineer indicating observations and results of tests and indicating compliance or non-compliance with requirements of Contract Documents.

1.7 PROTECTING INSTALLED CONSTRUCTION

A. Protect installed Work and provide special protection where specified in individual specification sections.

B. Provide temporary and removable protection for installed products. Control activity in immediate work area to prevent damage.

C. Provide protective coverings at walls, projections, jambs, sills, and soffits of openings.

D. Protect finished floors, stairs, and other surfaces from traffic, dirt, wear, damage, or movement of heavy objects, by protecting with durable sheet materials.

E. Prohibit traffic or storage upon waterproofed or roofed surfaces. When traffic or activity is necessary, obtain recommendations for protection from waterproofing or roofing material Manufacturer.

F. Prohibit traffic from landscaped areas.

1.8 PROJECT RECORD DOCUMENTS

A. Maintain on site one set of the following record documents; record actual revisions to the Work:
   1. Drawings
   2. Specifications
   3. Addenda
   4. Change Orders and other modifications to the Contract
   5. Reviewed Shop Drawings, Product Data, and Samples
   6. Manufacturer's instruction for assembly, installation, and adjusting

B. Ensure entries are complete and accurate, enabling future reference by Owner.

C. Store record documents separate from documents used for construction.

D. Record information concurrent with construction progress, not less than weekly.

E. Specifications: Legibly mark and record at each product section description of actual products installed, including the following:
   1. Manufacturer's name and product model and number
   2. Product substitutions or alternates utilized
   3. Changes made by Addenda and modifications

F. Record Drawings: Legibly mark each item to record actual construction including:
   1. Measured depths of foundations in relation to finish main floor datum
   2. Measured horizontal and vertical locations of underground utilities and appurtenances, referenced to permanent surface improvements
   3. Measured locations of internal utilities and appurtenances concealed in construction, referenced to visible and accessible features of the Work
   4. Field changes of dimension and detail
   5. Details not on original Contract drawings

G. Submit documents to Architect/Engineer.

1.9 OPERATION AND MAINTENANCE DATA

A. Submit **three copies** of data bound in 8-1/2 x 11 inch (A4) text pages, three D side ring capacity expansion binders with durable plastic covers at Substantial Completion.

B. Prepare binder cover with printed title "OPERATION AND MAINTENANCE INSTRUCTIONS", title of project, and subject matter of binder when multiple binders are required.

C. Internally subdivide binder contents with permanent page dividers, logically organized as described below; with tab titling clearly printed under reinforced laminated plastic tabs.

D. Drawings: Provide with reinforced punched binder tab. Bind in with text; fold larger drawings to size of text pages.

E. Contents: Prepare Table of Contents for each volume, with each product or system description identified, typed on white paper, in three parts as follows:
   1. Part 1: Directory, listing names, addresses, and telephone numbers of Architect/Engineer, Contractor, Subcontractors, and major equipment Suppliers.
   2. Part 2: Operation and maintenance instructions, arranged by system and subdivided by specification section. For each category, identify names, addresses, and telephone numbers of Subcontractors and Suppliers. Identify the following:
      a. Significant design criteria
      b. List of equipment
      c. Parts list for each component
      d. Operating instructions
      e. Maintenance instructions for equipment and systems

f. Maintenance instructions for special finishes, including recommended cleaning methods and materials, and special precautions identifying detrimental agents

3. Part 3: Project documents and certificates, including the following:
   a. Shop drawings and product data
   b. Air and water balance reports
   c. Certificates
   d. Originals of warranties and bonds

1.10 MANUAL FOR MATERIALS AND FINISHES

A. Submit two copies of preliminary draft or proposed formats and outlines of contents before start of Work. Architect/Engineer will review draft and return one copy with comments.

B. Building Products, Applied Materials, and Finishes: Include product data, with catalog number, size, composition, and color and texture designations. Include information for re-ordering custom manufactured products.

C. Instructions for Care and Maintenance: Include Manufacturer's recommendations for cleaning agents and methods, precautions against detrimental agents and methods, and recommended schedule for cleaning and maintenance.

D. Moisture Protection and Weather Exposed Products: Include product data listing applicable reference standards, chemical composition, and details of installation. Include recommendations for inspections, maintenance, and repair.

E. Additional Requirements: As specified in individual product specification sections.

F. Include listing in Table of Contents for design data, with tabbed fly sheet and space for insertion of data.

1.11 MANUAL FOR EQUIPMENT AND SYSTEMS

A. Submit two copies of preliminary draft or proposed formats and outlines of contents before start of Work. Architect/Engineer will review draft and return one copy with comments.

B. For equipment, or component parts of equipment put into service during construction and operated by Owner, submit documents within ten days after acceptance of equipment by Owner.

C. Each Item of Equipment and Each System: Include description of unit or system, and component parts. Identify function, normal operating characteristics, and limiting conditions. Include performance curves, with engineering data and tests, and complete nomenclature and model number of replaceable parts.

D. Operating Procedures: Include start-up, break-in, and routine normal operating instructions and sequences. Include regulation, control, stopping, shut-down, and emergency instructions. Include summer, winter, and special operating instructions.

E. Additional Requirements: As specified in individual product specification sections.

F. Include listing in Table of Contents for design data, with tabbed dividers and space for insertion of data.

1.12 SPARE PARTS AND MAINTENANCE PRODUCTS

A. Furnish spare parts, maintenance, and extra products in quantities specified in individual specification sections.

B. Deliver to Owner at Substantial Completion.

1.13 PRODUCT WARRANTIES AND PRODUCT BONDS

A. Obtain warranties and bonds executed in duplicate by responsible Subcontractors, Suppliers, and Manufacturers, at Substantial Completion.

B. Execute and assemble transferable warranty documents and bonds from Subcontractors, Suppliers, and Manufacturers.

C. Verify documents are in proper form, contain full information, and are notarized.

D. Co-execute submittals when required.

E. Include Table of Contents and assemble in three D side ring binder with durable plastic cover. Three copies required.

F. Submit at Substantial Completion.

G. Time of Submittals:
1. For equipment or component parts of equipment put into service during construction with Owner's permission, submit documents within ten days after Owner acceptance.
2. Other submittals at Substantial Completion.

1.14 MAINTENANCE SERVICE

A. Furnish service and maintenance of components indicated in specification sections for one year from date of Substantial Completion.

B. Examine system components at frequency consistent with reliable operation. Clean, adjust, and lubricate as required.

C. Include systematic examination, adjustment, and lubrication of components. Repair or replace parts whenever required. Use parts produced by Manufacturer of original component.

D. Do not assign or transfer maintenance service to agent or Subcontractor without prior written consent of Owner and Engineer.

PART 2 - PRODUCTS (Not Used)

PART 3 - EXECUTION (Not Used)

END OF SECTION

SECTION 02100

SITE CLEARING

PART 1 - GENERAL

1.1 RELATED DOCUMENTS

A. Drawings and general provisions of the Contract, including General and Supplementary Conditions and Division 1 Specification Sections, apply to this Section.

1.2 SUMMARY ITEM 100. Preparing Right Of Way

A. The Contractor shall not begin any clearing operations before the resident Engineer has established and defined the trees and areas of vegetation that shall not be removed or disturbed by construction activities.

Prior to preparing Right of Way, those existing trees, shrubs or other landscape features designated by the Engineer for preservation and pruning as indicated on the "Roadside Planting" sheets and/or as directed by the Engineer shall be protected to the satisfaction of the Engineer. This protection work shall be considered subsidiary to this Item.

B. This Section includes the following:
1. Protecting existing trees and vegetation to remain
2. Removing trees and other vegetation
3. Clearing and grubbing
4. Topsoil stripping

C. C. Related Sections include the following:
1. Division 1 Section "Construction Facilities and Temporary Controls" for temporary utilities, temporary construction and support facilities, temporary security and protection facilities, and environmental protection measures during site operations
2. Division 2 Section "Earthwork" for soil materials, excavating, backfilling, and site grading

1.3 DEFINITIONS

A. Topsoil: Natural or cultivated surface-soil layer containing organic matter and sand, silt, and clay particles; friable, pervious, and black or a darker shade of brown, gray, or red than underlying subsoil; reasonably free of subsoil, clay lumps, gravel, and other objects more than 2 inches (50 mm) in diameter; and free of weeds, roots, and other deleterious materials.

1.4 MATERIALS OWNERSHIP

A. Except for materials indicated to be stockpiled or to remain Owner's property, cleared materials shall become Contractor's property and shall be removed from the site.

1.5 SUBMITTALS (None Required)

1.6 PROJECT CONDITIONS

A. Traffic: Minimize interference with adjoining roads, streets, walks, and other adjacent occupied or used facilities during site-clearing operations.

B. Do not close or obstruct streets, walks, or other adjacent occupied or used facilities without permission from Owner and authorities having jurisdiction.
   1. Provide alternate routes around closed or obstructed traffic ways if required by authorities having jurisdiction.

B. Improvements on Adjoining Property: Authority for performing indicated removal and alteration work on property adjoining Owner's property will be obtained by Owner before award of Contract.

C. Notify utility locator service for area where Project is located before site clearing.

PART 2 - PRODUCTS

Acceptable fencing material for tree protection shall be "Fence It Plus", 46"h x 150', new orange color, as manufactured by
Weathashade
3000 W. Orange Ave.
Apopka, Florida, 32703
(407) 889-3692
or approved equal. Approximately __ trees have been designated for preservation. All trees to be preserved are not necessarily shown on the plans.

PART 3 - EXECUTION

3.1 PREPARATION

A. Protect and maintain benchmarks and survey control points from disturbance during construction.

B. Provide erosion-control measures to prevent soil erosion and discharge of soil-bearing water runoff or airborne dust to adjacent properties and walkways.

C. Locate and clearly flag trees and vegetation to remain or to be relocated.

D. Protect existing site improvements to remain from damage during construction.
   1. Restore damaged improvements to their original condition, as acceptable to Owner.

3.2 TREE PROTECTION

A. Erect and maintain a temporary fence around drip line of individual trees or around perimeter drip line of groups of trees to remain. Remove fence when construction is complete.

B. Do not store construction materials, debris, or excavated material within drip line of remaining trees.
   1. Do not permit vehicles, equipment, or foot traffic within drip line of remaining trees.

C. Do not excavate within drip line of trees, unless otherwise indicated.

D. Repair or replace trees and vegetation indicated to remain that are damaged by construction operations, in a manner approved by Architect.
   1. Employ a qualified arborist, licensed in jurisdiction where Project is located, to submit details of proposed repairs and to repair damage to trees and shrubs.
   2. Replace trees that cannot be repaired and restored to full-growth status, as determined by the qualified arborist.

E. Protect existing trees in the following manner:
   1. Install protective measures to protect tree trunk and root zones as shown in the plans.
      a. Install a protective fence around the perimeter of the drip line.
      b. Strap boards around tree trunks.
      c. Cover ground area below canopies with 3 to 4 inches of coarse, shredded or chipped mulch.
   2. Do not allow vehicles, equipment, stockpiled materials, trash containers, portable toilets, temporary structures, or storage under tree canopies.
   3. Do not operate or clean machinery, tools, or equipment under tree canopies.
   4. Do not discard any paints, solvents, fuels, chemicals, or other contaminated substances that might cause injury to the root systems.
   5. Do not dig or trench below tree canopies.

3.3 CLEARING AND GRUBBING

A. Remove obstructions, trees, shrubs, grass, and other vegetation to permit installation of new construction. Removal includes digging out stumps and obstructions and grubbing roots.

B. Do not remove trees, shrubs, and other vegetation indicated to remain or to be relocated.
   1. Cut minor roots and branches of trees indicated to remain in a clean and careful manner where such roots and branches obstruct installation of new construction.
   2. Completely remove stumps, roots, obstructions, and debris extending to a depth of 18 inches (450 mm) below exposed subgrade.
   3. Use only hand methods for grubbing within drip line of remaining trees.

C. Fill depressions caused by clearing and grubbing operations with satisfactory soil material, unless further excavation or earthwork is indicated.

1. Place fill material in horizontal layers not exceeding 8-inch (200-mm) loose depth, and compact each layer to a density equal to adjacent original ground.

3.4 TOPSOIL STRIPPING

A. Remove sod and grass before stripping topsoil.

B. Strip topsoil to whatever depths are encountered in a manner to prevent intermingling with underlying subsoil or other waste materials.
   1. Strip surface soil of unsuitable topsoil, including trash, debris, weeds, roots, and other waste materials.

C. Stockpile topsoil materials away from edge of excavations without intermixing with subsoil. Grade and shape stockpiles to drain surface water. Cover to prevent windblown dust.
   1. Limit height of topsoil stockpiles to 72 inches (1800 mm).
   2. Do not stockpile topsoil within drip line of remaining trees.
   3. Stockpile surplus topsoil and allow for re-spreading deeper topsoil.
   4. Topsoil will be re-spread on site at direction of Engineer.

3.5 DISPOSAL

A. Disposal: Remove surplus soil material, unsuitable topsoil, obstructions, demolished materials, and waste materials, including trash and debris, and legally dispose of them off Owner's property.

END OF SECTION

SECTION 02200

EARTHWORK

PART 1 - GENERAL

1.1 SCOPE: Provide complete earthwork including general excavation and excavation for structure; footing excavation; rough grading; fill and backfill and finish grading.

1.2 SAMPLES: Submit samples of materials as required below. Samples of earth materials shall be delivered to job site in sufficient quantity necessary for testing laboratory to adequately investigate soil.

1.3 BASIS FOR BIDS: Materials at site are expected to be in accordance with materials indicated on logs and test holes included. Bids shall be based on excavating and filling with materials encountered at site except where special fill or backfill materials are specified herein or indicated on Drawings. No allowance or extra payments will be made by reason of variation in types of soil encountered or variations in their moisture contents. Additional fill material required shall be furnished and included as a part of the work. Removal of excess or objectionable materials shall be included as a part of the work.

1.4 COORDINATION: Coordinate excavation work with other trades for proper scheduling of work.

PART 2 - PRODUCTS

2.1 STOCKPILING: Material cut from building areas which is suitable for backfilling may be stored on site to be distributed later. Fill material required to be hauled in may be stockpiled at site until used, provided it is properly handled to prevent contamination with undesirable materials. Location of stockpiles shall be subject to approval of Architect. Stockpile topsoil separate from excavated sub-soil.

2.2 SURPLUS MATERIALS: Excavated materials not to be used in fills and backfills on this project shall be removed from site immediately. Materials containing rubbish, debris or rocks shall be removed.

2.3 MATERIALS

A. General Fill: Suitable existing excavated on-site dark brown clay soil free from vegetable matter, debris and other deleterious matter, unless otherwise noted

B. Select Fill: Beneath building shall consist of an inactive inert material having a maximum plasticity index (PI) of 4-15. Submit samples for approval, complete with lab analysis of fill if requested by Architect.

C. Top Soil: Clean natural top soil free of vegetation, debris and other deleterious matter. Upper 6" of topsoil stripped may be used.

D. Backfill: Suitable existing excavated on site soil free from deleterious matter, unless noted otherwise.

E. Backfill: (Walls and retaining walls): Granular, free draining, cohesionless soil. Submit samples and lab analysis for approval.

F. Sub-Soil Drainage Pipe Backfill: Washed pea gravel, well graded, 1/4" to 1/2" size, free of clay lumps, shale, or other materials which might disintegrate. Submit samples for approval.

G. Gravel Cushion under Walks and Concrete Paving Area: Select crushed gravel ranging from 1/4` to 1" in size shall be thoroughly wetted and compacted before concrete is placed.

PART 3 - EXECUTION

3.1 ROUGH GRADING: Excavation and rough grading shall be made to lines and grades shown. Planting and Lawn areas shall be over cut to allow a layer of topsoil not less that 6" thick. Excavations shall be maintained to drain and shall be kept free of excess water. Ponding of water on site will not be permitted. Remove objectionable and excess materials from site when excavated.

3.2 STRUCTURAL EXCAVATION

A. Locate and mark all existing underground utilities and services before beginning structural excavation.

B. Provide excavation for structures and footings, as required for construction, bracing and removal of forms. Bottom of excavating shall be reasonable level. Maintain excavations in as near their natural moisture condition as possible.

3.3 SUB-SOIL DRAINAGE EXCAVATION: Excavate or trench as required for sub-soil drainage pipes. Trenches shall be sized and sloped as detailed.

3.4 EXCAVATION BENEATH SLABS: Beneath slabs on grades, excavate and remove light brown and black clay and silty clay soil.

3.5 FILLING (OUTSIDE STRUCTURE): Roughen and loosen filled areas before placing of fill material. Spread suitable fill material in uniform layers over area not to exceed 6" thick compaction. Wet and work materials as required for proper compaction and thoroughly mix. Compaction shall be by tamping rollers or by utilizing excavation equipment to spread and compact fill to a uniform density equal to natural density of material before excavating. Areas adjacent to building, or where compacting equipment cannot work, shall be compacted with approved tampers. Compact filled areas to lines and grades shown, with allowances for a final layer of topsoil at least 6" thick in lawn areas.

END OF SECTION

SECTION 02210

GEOTECHNICAL DATA

PART 1 - GENERAL

1.1 INVESTIGATION

A. Soil and Subsurface Investigations were conducted at the Site, the results of which are to be found in the report, number ETTL Project No. t507-06, Dated July, 2006, conducted by ETTL Engineers & Consultants, Inc. who is responsible for the test results and report. This Section 02210 Geotechnical Data is included for reference only.

B. Plan of Borings and Log of Borings are attached.

C. A copy of the full report is available at the Architect's office for review.

D. Bidders are urged to review the report, examine soils investigation data, and to make their own investigation of the site before bidding.

PART 2 - PRODUCTS (Not Used)

PART 3 - EXECUTION (Not Used)

END OF SECTION

SECTION 02324

TRENCHING

PART 1 - GENERAL

1.1 SUMMARY

A. Section Includes:
1. Excavating trenches for utilities from 5 feet outside buildings to the utility service
2. Compacted fill from top of utility bedding to finished grade elevations
3. Backfilling and compaction

B. Related Sections:

1. Section 02512 - Site Water Distribution: Water piping and bedding from buildings to utility service
2. Section 02538 - Sanitary Sewer System: Sanitary sewer piping and bedding from buildings to utility service

1.2 DEFINITIONS

A. Utility: Any buried pipe, duct, conduit, or cable.

1.3 SUBMITTALS

A. Excavation Protection Plan (Trench Safety): Describe sheeting, shoring, and bracing materials and installation required to protect excavations and adjacent structures and property; include structural calculations to support plan.

1.4 QUALITY ASSURANCE

A. Perform Work in accordance with Texas Commission on Environmental Quality (TCEQ), Chapter 290, Public Water System Rules and/or Chapter 317, Wastewater System Rules.

1.5 QUALIFICATIONS

A. Prepare Excavation Protection Plan (Trench Safety) under the direct supervision of a Professional Engineer experienced in design of this Work and licensed in the State of Texas.

1.6 FIELD MEASUREMENTS

A. Verify field measurements prior to any required fabrications.

1.7 COORDINATION

A. Verify Work associated with lower elevation utilities is complete before placing higher elevation utilities.

B. Coordinate any work in TxDOT Right Of Way with the local TxDOT Area Maintenance Supervisor.

PART 2 - PRODUCTS (Not Used)

PART 3 - EXECUTION

3.1 LINES AND GRADES

A. Lay pipes to lines and grades indicated on Drawings.
   1. Engineer reserves right to make changes in lines, grades, and depths of utilities when changes are required for Project conditions.

B. Use laser-beam instrument with qualified operator to establish lines and grades.

****** [OR] ******

C. Maintain grade alignment of pipe using string line parallel with grade line and vertically above centerline of pipe.
   1. Establish string line on level batter boards at intervals of not more than 25 feet .
   2. Install batter boards spanning trench, rigidly anchored to posts driven into ground on both sides of trench.
   3. Set three adjacent batter boards before laying pipe to verify grades and line.
   4. Determine elevation and position of string line from elevation and position of offset points or stakes located along pipe route.
   5. Do not locate pipe using sidelines for line or grade.

3.2 PREPARATION

A. Call Local Utility Line Information (One Call) service not less than three working days before performing Work.
   1. Request underground utilities to be located and marked within and surrounding construction areas.

B. Identify required lines, levels, contours, and datum locations.

C. Protect plant life and other features remaining as portion of final landscaping.

D. Protect bench marks and paving from excavating equipment and vehicular traffic.

E. Maintain and protect above and below grade utilities indicated to remain.

F. Establish temporary traffic control when trenching is performed in public right-of-way. Relocate controls as required during progress of Work.

3.3 TRENCHING

A. Excavate subsoil required for utilities to utility service.

B. Remove lumped subsoil, boulders, rock, roots and other deleterious material.

C. Do not advance open trench more than 100 feet ahead of installed pipe.

D. Cut trenches to width indicated on Drawings. Remove water or materials that interfere with Work.

E. Excavate bottom of trenches indicated on Drawings.

F. Excavate trenches to depth indicated on Drawings.

G. Remove excess subsoil not intended for reuse, from site.

3.4 SHEETING AND SHORING

A. Sheet, shore, and brace excavations to prevent danger to persons, structures and adjacent properties and to prevent caving, erosion, and loss of surrounding subsoil.

B. Support trenches more than 4 feet deep excavated through unstable, loose, or soft material. Provide sheeting, shoring, bracing, or other protection to maintain stability of excavation in accordance with the Excavation Protection Plan (Trench Safety).

C. Design sheeting and shoring to be removed at completion of excavation work.

D. Repair damage caused by failure of the sheeting, shoring, or bracing and for settlement of filled excavations or adjacent soil.

E. Repair damage to new and existing Work from settlement, water or earth pressure or other causes resulting from inadequate sheeting, shoring, or bracing.

3.5 BACKFILLING

A. Backfill trenches to contours and elevations with clean select fill materials..

B. Place fill material in continuous layers and compact in 8 inch lifts by mechanically tamping. Achieve a minimum of 90% density by means of Ordinary Compaction.

C. Employ placement method that does not disturb or damage utilities in trench.

D. Maintain optimum moisture content of fill materials to attain required compaction density.

E. Do not leave more than 25 feet of trench open at end of working day.

F. Protect open trench to prevent danger to the public and workers on the site.

3.6 PROTECTION OF FINISHED WORK

A. Reshape and re-compact backfilled trenches subjected to settlement and vehicular traffic during construction.

END OF SECTION

SECTION 02362

TERMITE CONTROL

PART 1 - GENERAL

1.1 RELATED DOCUMENTS

A. Drawings and general provisions of the Contract, including General and Supplementary Conditions and Division 1 Specification Sections, apply to this Section.

1.2 SUMMARY

A. This Section includes the following for termite control:
1. **Non-Chemical System** designed to stop subterranean termites from entering a building by blocking any entrances through the foundation.

1.3 DEFINITIONS

A. EPA: Environmental Protection Agency.

B. PCO: Pest control operator.

1.4 SUBMITTALS

A. Product Data: Manufacturer's descriptive literature, specifications, and installation instructions.

B. Qualification Data: For Installer of termite control products.

C. Warranties: Special warranties specified in this Section.

1.5 QUALITY ASSURANCE

A. Applicator Qualifications: Accredited Installers who have undergone extensive training in both the System as well as understanding the habits of termites in jurisdiction where Project is located and who is experienced and has completed termite control treatment similar to that indicated for this Project and whose work has a record of successful in-service performance.

B. Regulatory Requirements: Formulate and apply termiticides, and label with a Federal registration number, to comply with EPA regulations and authorities having jurisdiction.

1.6 PROJECT CONDITIONS

A. Environmental Limitations: To ensure penetration, do not treat soil that is water saturated or frozen. Do not treat soil while precipitation is occurring. Comply with EPA-Registered Label requirements and requirements of authorities having jurisdiction.

1.7 COORDINATION

A. Coordinate treatment application with excavating, filling, and grading and concreting operations.

1.8 WARRANTY

A. General Warranty: Special warranty specified in this Article shall not deprive Owner of other rights Owner may have under other provisions of the Contract Documents and shall be in addition to, and run concurrent with, other warranties made by Contractor under requirements of the Contract Documents.

B. Special Warranty: Written warranty, signed by Applicator and Contractor certifying that termite control work, consisting will prevent infestation of subterranean termites. If subterranean termite activity or damage is discovered during warranty period, re-treat soil and repair or replace damage caused by termite infestation.

C. Warranty Period: Five years from date of Substantial Completion.

PART 2 - PRODUCTS

2.1 MATERIALS

A. Marine grade stainless steel mesh of a grade not lower than 316 (AISI 31600) made from 0.18 mm diameter wire with mesh openings of 0.66 x 0.45 mm and supplied in widths of 1200 mm and lengths of 30 meters. (47.25 inch x 100 feet).

B. Clamps 301 Stainless Steel.

C. Bonding cement: a specialized bonding cement which bonds the mesh to either concrete, masonry or other termite resistant substrates.

D. Epoxy Resins: Specialized epoxy resins used for bonding of mesh to concrete, masonry, steel and galvanized or zinc alum coated steel substrates.

E. Available Manufacturers: Subject to compliance with requirements, Manufacturers offering products that may be incorporated into the Work include, but are not limited to, the following:
   1. TERMI MESH USA, INC.
   2. Substitutions: Section 01600 - Product Requirements
   3. Others only as approved equivalent by Architect

PART 3 - EXECUTION

3.1 EXAMINATION

A. Examine substrates, areas, and conditions, with Applicator present, for compliance with Manufacturer's requirements, interfaces with earthwork, slab and foundation work, landscaping, and other conditions affecting performance of termite control.
   1. Proceed with application only after unsatisfactory conditions have been corrected.

3.2 PREPARATION

A. General: Comply with the most stringent requirements of authorities having jurisdiction and with Manufacturer's written instructions for preparing substrate. Remove all extraneous sources of wood cellulose and other edible materials such as wood debris, tree stumps and roots, stakes, formwork, and construction waste wood from soil and around foundations.

B. Soil Treatment Preparation: Remove foreign matter and impermeable soil materials that could decrease treatment effectiveness on areas to be treated. Loosen, rake, and level soil to be treated, except previously compacted areas under slabs and footings.

C. Fit filling hose connected to water source at the site with a backflow preventer, complying with requirements of authorities having jurisdiction.

3.3 APPLICATION, GENERAL

A. The System shall be installed in accordance with the Manufacturer's published installation instructions. The system shall only be installed by Installers trained and accredited by Manufacturer.

B. The Manufacturers published instructions shall be strictly adhered to and a copy of the instructions shall be available at all time on the job site during installation.

3.4 TYPICAL INSTALLATION

A. The System will be installed under the slab on ground, in cavity walls, on the outside perimeter of cavity walls, as a cold joint installation between existing structure and over concrete masonry units and new slabs. The mesh is joined by a 10 to 15 mm physical lap joint. This joint will be strengthened by using a hot-glue gun ever 20 inches o.c. along the join.

B. Sealing penetrations through concrete slabs: mesh and clamps system.

END OF SECTION

SECTION 02446

BORING AND JACKING CONDUITS

PART 1 - GENERAL

1.1 SUMMARY

A. Section Includes:
   1. Excavation for approach trenches and pits
   2. Casing pipe
   3. Carrier pipe

B. Related Sections:
   1. Section 02324 - Trenching
   2. Section 02512 - Site Water Distribution

1.2 UNIT PRICE - MEASUREMENT AND PAYMENT

A. Jacked Pipe:
   1. Basis of Measurement: By linear foot measured on invert of jacked pipe from face to face of jacked pipe
   2. Basis of Payment: Includes excavation, jacked pipe, carrier pipe, accessories, tests, and backfill

1.3 REFERENCES

A. ASTM International:
   1. ASTM A53/A53M - Standard Specification for Pipe, Steel, Black and Hot-Dipped, Zinc-Coated, Welded and Seamless

B. American Welding Society:
   1. AWS D1.1 - Structural Welding Code - Steel

C. National Utility Contractors Association:
   1. NUCA - Pipe Jacking & Microtunneling Design Guide
   2. NUCA - Trenchless Excavation Construction Equipment & Methods Manual

1.4 DESIGN REQUIREMENTS

A. Design casing pipe joints of leakproof construction. Design for earth and or other pressures present plus highway H20 loading.
   1. Highway Crossings: Design tunnel for earth and or other pressure loads present, plus AASHTO H20 live loading.

B. Design bracing, backstops, and use jacks of sufficient rating for continuous jacking without stoppage, except for adding pipe sections and as conditions permit, to minimize tendency of ground material to "freeze" around casing pipe.

1.5 SUBMITTALS

A. Section 01330 - Submittal Procedures: Requirements for submittals.

B. Shop Drawings: Prepare scaled shop Drawings to supplement Contract Drawings.
1. Include details of casing, jacking head, sheeting, and other falsework for trenches and pits, and field sketches, and other details, to complete the Work.
2. Show cross section or sections from field survey, showing installation in relation to actual profile of ground.

C. Design Data: Submit casing pipe design calculations and Manufacturer’s data.

D. Submit history of previous work completed of equivalent nature and scope. Include qualification and experience of key personnel.

E. Installation Plan: Submit description of proposed construction plan, dewatering plan, and plan to establish and maintain vertical and horizontal alignment.

F. Traffic Control Plan in accordance with *Texas Manual on Uniform Traffic Control Devices.*

G. Submit emergency response procedures to handle situations when conduit is compromised and jeopardizes integrity of installation or safety.

1.6 CLOSEOUT SUBMITTALS

A. Project Record Documents: Record actual locations of casing and carrier pipe invert elevations.

B. Identify and describe unexpected variations to subsoil conditions or discovery of uncharted utilities.

1.7 QUALITY ASSURANCE

A. Perform work in accordance with Item 476 TxDOT Standard Specifications for *Construction and Maintenance of Highways, Streets, and Bridges, 2004.*

1.8 QUALIFICATIONS

A. Installer: Company specializing in performing work of this section with minimum 5 years experience.
1. Work Experience: Include projects of similar magnitude and conditions.
2. Furnish list of references upon request.

1.9 PRECONSTRUCTION MEETING

A. Section 01300 - Administrative Requirements: Preconstruction meeting.

B. Convene minimum one week prior to commencing work of this section.

1.10 DELIVERY, STORAGE, AND HANDLING

A. Provide temporary end caps and closures on piping and fittings. Maintain in place until installation.

B. Protect piping from entry of foreign materials and water by temporary covers, completing sections of work, and isolating parts of completed system.

C. Accept system components on site in Manufacturer's original containers or configuration. Inspect for damage.

D. Use wooden shipping braces between layers of stacked pipe. Stack piping lengths no more than 3 layers high.

E. Store field joint materials indoors in dry area in original shipping containers. Maintain storage temperature of 60 to 85 degrees F.

F. Support casing and carrier pipes with nylon slings during handling.

1.11 ENVIRONMENTAL REQUIREMENTS

A. Conduct operations so as not to interfere with, interrupt, damage, destroy, or endanger integrity of surface or subsurface structures or utilities, and landscape in immediate or adjacent areas.

1.12 FIELD MEASUREMENTS

A. Verify invert elevations of existing work prior to excavation and installation of casing pipe.

1.13 COORDINATION

A. Section 01300 - Administrative Requirements: Requirements for coordination.

B. Coordinate work with Owner and utilities within construction area.

PART 2 - PRODUCTS

2.1 CASING AND JACKING PIPE MATERIALS

A. Steel Casing Pipe: ASTM A53/A53M, 42,000 psi minimum yield strength, minimum wall thickness of 0.375 inch, full circumference welded joints in accordance with AWS D1.1 to withstand excavation forces.

2.2 CARRIER PIPE MATERIALS

A. Site Water Distribution System Piping: As specified in Section 02512.

2.3 COVER MATERIALS

A. Soil Backfill for Trench Approaches and Pits to Finish Grade: Subsoil with no rocks over 3 inches in diameter, frozen earth or foreign matter.

2.4 ACCESSORIES

A. Supports and Insulators:
1. Steel and Plastic: 14 gage stainless steel band, 5/16 inch stainless steel flange bolts, heavy duty PVC liner, polyethylene or phenolic skids
2. Plastic: Polyethylene casing insulator band and skids with stainless steel bolts

B. End Seals for encasement pipe: Neoprene rubber with stainless steel clamps.

PART 3 - EXECUTION

3.1 EXAMINATION

A. Section 01300 - Administrative Requirements: Verification of existing conditions before starting work.

B. Verify connection size and locations are in accordance with Drawings.

3.2 PREPARATION

A. Identify required lines, levels, contours, and datum locations.

B. Locate, identify, and protect utilities indicated to remain from damage.

C. Protect plant life and other features remaining as portion of final landscaping.

D. Protect bench marks, survey control points, existing structures, fences, sidewalks, paving and curbs from excavating equipment and vehicular traffic.

E. Establish temporary traffic control and detours when trenching is performed in public right-of-way in accordance with the *Texas Manual on Uniform Traffic Control Devices*.

F. Establish elevations of casing with not less than 3 ft of cover.

3.3 DEWATERING

A. Intercept and divert surface drainage precipitation and groundwater away from excavation through use of dikes, curb walls, ditches, pipes, sumps or other means.

B. Develop substantially dry subgrade for prosecution of subsequent operations.

C. Comply with TCEQ requirements for dewatering to any watercourse, prevention of stream degradation, and erosion and sediment control.

3.4 PITS OR APPROACH TRENCHES

A. Excavate approach trenches or pits in accordance with installation plan and as site conditions require.

3.5 CASING PIPE INSTALLATION

A. Boring:
1. Push pipe into ground with boring auger rotating within pipe to remove spoil. Do not advance cutting head ahead of casing pipe except for distance necessary to permit cutting teeth to cut clearance for pipe. Arrange machine bore and cutting head to be removable from within pipe. Arrange face of cutting head to provide barrier to free flow of soft material.
2. When unstable soil is encountered during boring retract cutting head into casing to permit balance between pushing pressure and ratio of pipe advancement to quantity of soil.
3. When voids develop greater than outside diameter of pipe by approximately one inch, grout to fill voids.
4. When boring is obstructed, relocate, jack, or tunnel as directed by Engineer.

B. Jacking:
1. Construct adequate thrust wall normal to proposed line of thrust.
2. Impart thrust load to pipe through suitable thrust ring sufficiently rigid to ensure uniform distribution of thrust load on full pipe circumference.

C. Drilling and Jacking:
1. Use oil field type rock roller bit or plate bit made up of individual roller cutter units solidly welded to pipe which is turned and pushed for its entire length by drilling machine to give bit necessary cutting action.
2. Inject high density slurry (oil field drilling mud) to head as cutter lubricant. Inject slurry at rear of cutter units to prevent jetting action ahead of pipe.

3.6 PRESSURE GROUTING

A. Pressure grout annular space between casing pipe and surrounding earth.

3.7 CARRIER PIPE INSTALLATION

A. Clean, inspect, and handle pipe in accordance with Section 02512.

B. Place carrier pipe in accordance with Section 02512. Exercise care to prevent damage to pipe joints when carrier pipe is placed in casing.

C. Support pipeline within casing so no external loads are transmitted to carrier pipe. Attach supports to barrel of carrier pipe; do not rest carrier pipe on bells.

D. Grout ends of casing to seal.

3.8 TOLERANCES

A. Do not over cut excavation by more than 1 inch greater than outside diameter of casing pipe.

END OF SECTION

SECTION 02512

SITE WATER DISTRIBUTION

PART 1 - GENERAL

1.1 SUMMARY

A. Section Includes:
   1. Pipe and fittings for site water line
   2. Valves

B. Related Sections:
   1. Section 02324 – Trenching: Excavation, Trench Safety, backfilling, compaction and spoil disposal.
   2. Section 02516 - Disinfection of Water Distribution: Disinfection of site service utility water piping
   3. Section 01330 – Submittal Procedures

1.2 LUMP SUM - MEASUREMENT AND PAYMENT

A. Pipe and Fittings:
   1. Provide schedule and cost.

B. Valves and Meter Assemblies:
   1. Provide schedule and cost.

1.3 REFERENCES

A. American Society of Testing Materials:
   1. ASTM A 48, Class 30B, Valve box, casing and cover

B. American Water Works Association:
   1. AWWA C-900, SDR-18 (150 psi) Water Pipe
   2. AWWA C-110 Ductile Iron Fittings
   3. AWWA C-153 Compressed Ductile Iron Fittings
   4. AWWA C- 509 Iron-Body Gate Valves
   5. AWWA C-800 Bronze (Brass) Ball Valves

1.4 SUBMITTALS

A. Section 01330 - Submittal Procedures: Requirements for submittals.

B. Product Data: Submit data on pipe materials, pipe fittings, valves and accessories.

1.5 CLOSEOUT SUBMITTALS

A. Project Record Documents: Record actual locations of piping, valves and connections.

B. Identify and describe unexpected variations to subsoil conditions or discovery of uncharted utilities.

1.6 QUALITY ASSURANCE

A. Perform Work in accordance with Texas Commission on Environmental Quality (TCEQ), Chapter 290, Public Water Rules and Regulations.

B. Valves: Manufacturer's name and pressure rating marked on valve body.

1.7 DELIVERY, STORAGE, AND HANDLING

A. Deliver and store valves in shipping containers with labeling in place.

PART 2 - PRODUCTS

2.1 WATER PIPING

A. Polyvinyl Chloride Water Pipe
   1. Pipe: AWWA C-900 SDR 18 (150 psi)
   2. Fittings: AWWA C-110 or AWWA C-153
   3. Pipe: Schedule 80 ASTM D1785
   4. Fittings: ASTM D2466

2.2 GATE VALVES

A. 3 inches and Larger: AWWA C509, Iron body, bronze trim, non-rising stem with square nut, single wedge, resilient seat, mechanical joint ends, extension box and valve key.

2.3 BALL VALVES

A. Two (2) inches and smaller: AWWA C800, Brass body, teflon coated brass ball, rubber seats and stem seals, compression inlet end, compression outlet, extension box and valve key.

2.4 VALVE BOXES

A. Cast iron valve boxes for buried valves, 2 section adjustable screw type, suitable for depth of cover, with base, top section and cover.

B. At least 5 inches in diameter, 3/16 inch thick, with suitable cast iron bases and covers.

C. Coat valve boxes and covers by dipping in hot bituminous varnish.

D. Locking type covers. Identify covers with casting mark “WATER”.

E. Provide precast concrete valve or meter boxes with cast iron lids.

2.3 UNDERGROUND PIPE MARKERS

A. Trace Wire: Magnetic detectable conductor.

PART 3 - EXECUTION

3.1 EXAMINATION

A. Section 01300 - Administrative Requirements: Verification of existing conditions before starting work.

3.2 PREPARATION

A. Cut pipe ends square, ream pipe and tube ends to full pipe diameter, remove burrs.

B. Remove scale and dirt on inside and outside before assembly.

3.3 INSTALLATION - PIPE

A. Install access fittings to permit disinfection of water system performed under Section 02516.

B. Install trace wire.

3.4 INSTALLATION - VALVES AND HYDRANTS

A. Set valves on pea gravel.

B. Center and plumb valve box over valve. Set box cover flush with finished grade and provide a concrete collar as shown in Drawings.

3.5 TRENCH SAFETY SYSTEMS

A. If required, contractor shall be responsible for providing Trench Safety Systems in accordance with current State and OSHA regulations.

3.6 FIELD QUALITY CONTROL

A. Perform pressure test on domestic site water distribution system in accordance with AWWA C-605.

END OF SECTION

SECTION 02516

DISINFECTION OF WATER DISTRIBUTION

PART 1 - GENERAL

1.1 SUMMARY

A. Section includes disinfection of potable water distribution [and transmission] system; and testing and reporting results.

B. Related Sections:

1. Section 02512 - Site Water Distribution Product and Execution requirements for installation, testing, of site domestic water distribution piping

1.2 REFERENCES

A. American Water Works Association:
1. AWWA B300 - Hypochlorites
2. AWWA B302 - Ammonium Sulfate
3. AWWA B303 - Sodium Chlorite
4. AWWA C651 - Disinfecting Water Mains

1.3 SUBMITTALS

A. Section 01330 - Submittal Procedures: Requirements for submittals.

B. Product Data: Submit procedures, proposed chemicals, and treatment levels for review.

C. Test Reports: Indicate results comparative to specified requirements.

D. Certificate: Certify cleanliness of water distribution system meets or exceeds TCEQ Chapter 290 requirements.

1.4 CLOSEOUT SUBMITTALS

A. Disinfection Report:
1. Type and form of disinfectant used
2. Date and time of disinfectant injection start and time of completion
3. Test locations
4. Name of person collecting samples
5. Initial and 24 hour disinfectant residuals in treated water in ppm for each outlet tested
6. Date and time of flushing start and completion

7. Disinfectant residual after flushing in ppm for each outlet tested

B. Bacteriological Report:
1. Date issued, project name, and testing laboratory name, address, and telephone number
2. Time and date of water sample collection
3. Name of person collecting samples
4. Test locations
5. Initial and 24 hour disinfectant residuals in ppm for each outlet tested
6. Coliform bacteria test results for each outlet tested
7. Certify water conforms, or fails to conform, to bacterial standards of TCEQ

1.5 QUALITY ASSURANCE

A. Perform Work in accordance with AWWA C651.

1.6 QUALIFICATIONS

A. Testing Firm: Company specializing in testing potable water systems, approved by State of Texas.

B. Submit bacteriologist's signature and authority associated with testing.

PART 2 - PRODUCTS

2.1 DISINFECTION CHEMICALS

A. Chemicals: AWWA B300, Hypochlorite, AWWA B302, Ammonium Sulfate, and AWWA B303, Sodium Chlorite.

PART 3 - EXECUTION

3.1 EXAMINATION

A. Section 01300 - Administrative Requirements: Verification of existing conditions before starting work.

B. Verify piping system has been cleaned, inspected, and pressure tested.

C. Perform scheduling and disinfecting activity with start-up, water pressure testing, adjusting and balancing, demonstration procedures, including coordination with related systems.

3.2 INSTALLATION

A. Provide and attach required equipment to perform the Work of this section.

B. Perform disinfection of water distribution system and installation of system and pressure testing. Refer to Section 02512.

C. Inject treatment disinfectant into piping system.

D. Maintain disinfectant in system for 24 hours.

E. Flush, circulate, and clean until required cleanliness is achieved; use domestic water.

F. Replace permanent system devices removed for disinfection.

3.3 FIELD QUALITY CONTROL

A. Disinfection, Flushing, and Sampling:
1. Disinfect pipeline installation in accordance with AWWA C651. Use of liquid chlorine is not permitted
2. Upon completion of retention period required for disinfection, flush pipeline until chlorine concentration in water leaving pipeline is no higher than that generally prevailing in existing system or is acceptable for domestic use.
3. Legally dispose of chlorinated water. When chlorinated discharge may cause damage to environment, apply neutralizing chemical to chlorinated water to neutralize chlorine residual remaining in water.
4. After final flushing and before pipeline is connected to existing system, or placed in service, employ an approved independent testing laboratory to sample, test and certify water quality suitable for human consumption.

END OF SECTION

SECTION 02538

SANITARY SEWER SYSTEM

PART 1 - GENERAL

1.1 SUMMARY

A. Section Includes:
1. Sanitary sewage pipe
2. Manholes
3. Bedding and cover materials

B. Related Sections:
1. Section 02320 - Backfill: Requirements for backfill to be placed by this section
2. Section 02324 - Trenching: Execution requirements for trenching required by this section

1.2 REFERENCES

A. ASTM International:
1. ASTM A48, Manhole Rings and covers (32” diameter covers) Gray Cast or ASTM A536, Ductile Iron
2. ASTM D1785 - Standard Specification for Poly (Vinyl Chloride) (PVC) Plastic Pipe, Schedules 40, 80, and 120
3. ASTM D2466 - Standard Specification for Poly (Vinyl Chloride) (PVC) Plastic Pipe Fittings, Schedule 40
4. ASTM D2564 - Standard Specification for Solvent Cements for Poly (Vinyl Chloride) (PVC) Plastic Piping Systems
5. ASTM D2855 - Standard Practice for Making Solvent-Cemented Joints with Poly (Vinyl Chloride) (PVC) Pipe and Fittings
6. ASTM D3034 - Standard Specification for Type PSM Poly (Vinyl Chloride) (PVC) Sewer Pipe and Fittings
7. ASTM F477 - Standard Specification for Elastomeric Seals (Gaskets) for Joining Plastic Pipe

1.3 DEFINITIONS

A. Bedding: Fill placed under, beside and directly over pipe, prior to subsequent backfill operations.

1.4 SUBMITTALS

A. Section 01330 - Submittal Procedures: Requirements for submittals.

B. Product Data: Submit data indicating pipe material used, pipe accessories, and manhole frames and covers.

1.5 CLOSEOUT SUBMITTALS

A. Section 01700 - Execution Requirements: Requirements for submittals.

B. Project Record Documents: Record location of pipe runs, connections, manholes, and invert elevations.

1.6 QUALITY ASSURANCE

A. Perform Work in accordance with Texas Commission on Environmental Quality (TCEQ), Chapter 317, Wastewater systems.

1.7 PRE-INSTALLATION MEETINGS

A. Section 01300 - Administrative Requirements: Pre-installation meeting.

1.8 FIELD MEASUREMENTS

A. Verify field measurements and elevations as indicated on Drawings.

1.9 COORDINATION

A. Section 01300 - Administrative Requirements: Coordination and project conditions.

B. Coordinate the Work with termination of sanitary sewer connection outside buildings, and connection to municipal sewer utility service.

PART 2 - PRODUCTS

2.1 SANITARY SEWAGE PIPE

A. Plastic Pipe: ASTM D3034, Type PSM, Poly (Vinyl Chloride) (PVC) material; inside nominal diameter of 6 inches, bell and spigot style rubber ring sealed gasket joint.
   1. Fittings: PVC
   2. Joints: ASTM F477, elastomeric gaskets

2.2 MANHOLES

A. Manhole Lid and Frame Manufacturers:
   1. East Jordan Iron Works (formerly Western Iron Works), San Angelo, Texas

B. Manhole Lid and Frame:
   1. Construction: Cast iron ring and ductile iron cover
   2. Lid Design: Marked “SEWER”

C. Shaft Construction and Concentric Cone Top Section: Reinforced precast Concrete pipe sections.

D. Base Pad: Cast-In-Place concrete (Class A, 3000 psi), leveled top surface to receive concrete shaft sections, sleeved to receive sanitary sewer pipe sections.

2.3 BEDDING AND COVER MATERIALS

A. Bedding: Washed sand.

B. Soil Backfill from Above Bedding to Finish Grade: Select compacted (Subsoil with no rocks over 2 inches in diameter, frozen earth or foreign matter.)

PART 3 - EXECUTION

3.1 EXAMINATION

A. Section 01300 - Administrative Requirements: Verification of existing conditions before starting work.

B. Verify trench cut is ready to receive work and excavations, dimensions, and elevations are as indicated on drawings.

3.2 PREPARATION

A. Correct over excavation with fine aggregate or sand.

B. Remove large stones or other hard matter which could damage pipe or impede consistent backfilling or compaction.

3.3 BEDDING

A. Excavate pipe trench in accordance with Section 02324.

B. Place bedding material at trench bottom, level materials in continuous layer not exceeding 6 inches.

C. Maintain optimum moisture content of bedding material to attain required compaction density.

3.4 INSTALLATION - PIPE

A. Lay pipe to slope gradients noted on drawings; with maximum variation from indicated slope of 0.1 %.

B. Install bedding at sides and over top of pipe to minimum compacted thickness of 12 inches.

C. Refer to Section 02324 for backfilling and compacting requirements. Do not displace or damage pipe when compacting.

D. Install site sanitary sewage system piping to 5 feet of building.

3.5 INSTALLATION - MANHOLES

A. Excavate for manholes.

B. Form bottom of excavation clean and smooth to correct elevation.

C. Form and place cast-in-place concrete base pad, with provision for sanitary sewer pipe end sections.

D. Establish elevations and pipe inverts for inlets and outlets as indicated on Drawings.

E. Mount lid and frame level in grout, secured to top cone section to elevation indicated.

3.6 FIELD QUALITY CONTROL

A. Perform test on site sanitary sewage system in accordance with TCEQ rules.

3.7 PROTECTION OF FINISHED WORK

A. Section 01700 - Execution Requirements: Requirements for protecting finished Work.

B. Protect pipe and aggregate cover from damage or displacement until backfilling operation is in progress.

END OF SECTION

SECTION 02539

ON SITE SEWER FACILITY

THIS SPECIFICATION SECTION WILL BE PROVIDED BY ADDENDUM

SECTION 02741

HOT-MIX ASPHALT PAVING / STRIPING

PART 1 - GENERAL

1.1 RELATED DOCUMENTS

A. Drawings and general provisions of the Contract, including General and Supplementary Conditions and Division 1 Specification Sections, apply to this Section.

1.2 SUMMARY

A. This Section includes the following:
   1. Hot-mix asphalt paving
   2. Pavement-marking paint

B. Related Sections include the following:
   1. Division 2 Section "Earthwork" for aggregate sub-base and base courses and for aggregate pavement shoulders
   2. Division 2 Section "Pavement Joint Sealants" for joint sealants and fillers at paving terminations

1.3 DEFINITIONS

A. Hot-Mix Asphalt Paving Terminology: Refer to ASTM D 8 for definitions of terms.

B. TxDOT: Texas Department of Transportation.

1.4 SYSTEM DESCRIPTION

A. Provide hot-mix asphalt paving according to materials, workmanship, and other applicable requirements of standard specifications of TxDOT.
   1. Standard Specification: See 340, Hot Mix Asphaltic Concrete Pavement, and any related items, of the Standard Specifications for Construction and Maintenance of Highways, Streets, and Bridges (2004).
   2. Measurement and payment provisions and safety program submittals included in standard specifications do not apply to this Section.

1.5 SUBMITTALS

A. Product Data: For each type of product indicated. Include technical data and tested physical and performance properties.

B. Job-Mix Designs: Certification, by authorities having jurisdiction, of approval of each job mix proposed for the Work.

C. Job-Mix Designs: For each job mix proposed for the Work.

D. Material Test Reports: For each paving material.

E. Material Certificates: For each paving material, signed by Manufacturers.

1.6 QUALITY ASSURANCE

A. Manufacturer Qualifications: A qualified Manufacturer.
1. Manufacturer shall be a paving-mix Manufacturer registered with and approved by authorities having jurisdiction or TxDOT.

B. Testing Agency Qualifications: Qualified according to ASTM D 3666 for testing indicated, as documented according to ASTM E 548.

C. Regulatory Requirements: Comply with TxDOT specifications previously referenced for asphalt paving work.

D. Asphalt-Paving Publication: Comply with AI MS-22, "Construction of Hot Mix Asphalt Pavements," unless more stringent requirements are indicated.

1.7 DELIVERY, STORAGE, AND HANDLING

A. Deliver pavement-marking materials to Project site in original packages with seals unbroken and bearing Manufacturer's labels containing brand name and type of material, date of manufacture, and directions for storage.

B. Store pavement-marking materials in a clean, dry, protected location within temperature range required by Manufacturer. Protect stored materials from direct sunlight.

1.8 PROJECT CONDITIONS

A. Environmental Limitations: Do not apply asphalt materials if subgrade is wet or excessively damp or if the following conditions are not met:
1. Prime and Tack Coats: Minimum surface temperature of 60 deg F (15.5 deg C)
2. Asphalt Base Course: Minimum surface temperature of 40 deg F (4 deg C) and rising at time of placement
3. Asphalt Surface Course: Minimum surface temperature of 60 deg F (15.5 deg C) at time of placement

B. Pavement-Marking Paint: Proceed with pavement marking only on clean, dry surfaces and at a minimum ambient or surface temperature of 40 deg F (4 deg C) for oil-based materials, 50 deg F (10 deg C) for water-based materials, and not exceeding 95 deg F (35 deg C).

PART 2 - PRODUCTS

2.1 AGGREGATES

A. Must comply with previously referenced TxDOT specifications.

2.2 ASPHALT MATERIALS

A. Must comply with previously referenced TxDOT specifications.

2.3 AUXILIARY MATERIALS

A. Must comply with previously referenced TxDOT specifications.

2.4 MIXES

A. Must comply with previously referenced TxDOT specifications.

PART 3 - EXECUTION

3.1 EXAMINATION

A. Must comply with previously referenced TxDOT specifications.

3.2 SURFACE PREPARATION

A. Must comply with previously referenced TxDOT specifications.

3.3 HOT-MIX ASPHALT PLACING

A. Must comply with previously referenced TxDOT specifications.

3.4 JOINTS

A. Must comply with previously referenced TxDOT specifications.

3.5 COMPACTION

A. Must comply with previously referenced TxDOT specifications.

3.6 INSTALLATION TOLERANCES

A. Must comply with previously referenced TxDOT specifications.

3.7 PAVEMENT MARKING

A. Do not apply pavement-marking paint until layout, colors, and placement have been verified with Architect.

B. Allow paving to age for 30 days before starting pavement marking.

C. Sweep and clean surface to eliminate loose material and dust.

D. Apply paint with mechanical equipment to produce pavement markings, of dimensions indicated, with uniform, straight edges. Apply at Manufacturer's recommended rates to provide a minimum wet film thickness of 15 mils (0.4 mm).

3.8 FIELD QUALITY CONTROL

A. Testing Agency: Owner will engage a qualified independent testing and inspecting agency to perform field tests and inspections and to prepare test reports.
   1. Testing agency will conduct and interpret tests and state in each report whether tested Work complies with or deviates from specified requirements.

B. Additional testing and inspecting, at Contractor's expense, will be performed to determine compliance of replaced or additional work with specified requirements.

C. Thickness: In-place compacted thickness of hot-mix asphalt courses will be determined according to the previously referenced TxDOT Specifications.

D. Surface Smoothness: Finished surface of each hot-mix asphalt course will be tested for compliance with smoothness tolerances.

E. In-Place Density: Testing agency will take samples of uncompacted paving mixtures and compacted pavement according to previously referenced TxDOT specifications.

F. Remove and replace or install additional hot-mix asphalt where test results or measurements indicate that it does not comply with specified requirements.

END OF SECTION

SECTION 02751

CEMENT CONCRETE

PART 1 - GENERAL

1.1 RELATED DOCUMENTS

A. Drawings and general provisions of the Contract, including General and Supplementary Conditions and Division 1 Specification Sections, apply to this Section.

1.2 SUMMARY

A. This Section includes exterior cement concrete for the following:
   1. Curbs and gutters
   2. Sidewalks
   3. Retaining walls

B. Related Sections include the following:
   1. Division 2 Section "Earthwork" for subgrade preparation, grading, and sub-base course
   2. Division 2 Section "Pavement Joint Sealants" for joint sealants within concrete pavement and at isolation joints of concrete pavement with adjacent construction
   3. Division 3 Section "Cast-in-Place Concrete" for general building applications of concrete

1.3 DEFINITIONS

A. Cementitious Materials: Portland cement alone or in combination with one or more of blended hydraulic cement, expansive hydraulic cement, fly ash and other pozzolans, ground granulated blast-furnace slag, and silica fume.

1.4 SUBMITTALS

A. Design Mixes: For each concrete mix. Include alternate mix designs when characteristics of materials, project conditions, weather, test results, or other circumstances warrant adjustments.

B. Material Test Reports: From a qualified testing agency indicating and interpreting test results for compliance of the following with requirements indicated, based on comprehensive testing of current materials:
   1. Cementitious materials and aggregates
   2. Steel reinforcement and reinforcement accessories
   3. Admixtures
   4. Curing compounds
   5. Bonding agent or adhesive
   6. Joint fillers

1.5 QUALITY ASSURANCE

A. Installer Qualifications: An experienced Installer who has completed work similar in material, design, and extent to that indicated for this Project and whose work has resulted in construction with a record of successful in-service performance.

B. Manufacturer Qualifications: Manufacturer of ready-mixed concrete products complying with ASTM C 94 requirements for production facilities and equipment.
1. Manufacturer must be certified according to the National Ready Mix Concrete Association's Plant Certification Program.

C. Testing Agency Qualifications: An independent testing agency, acceptable to authorities having jurisdiction, qualified according to ASTM C 1077 and ASTM E 329 to conduct the testing indicated, as documented according to ASTM E 548.

D. Source Limitations: Obtain each type or class of cementitious material of the same brand from the same Manufacturer's plant and each aggregate from one source.

E. ACI Publications: Comply with ACI 301, "Specification for Structural Concrete," unless modified by the requirements of the Contract Documents.

F. Concrete Testing Service: Owner will engage a qualified independent testing agency to perform material evaluation tests and to design concrete mixes.

1.6 PROJECT CONDITIONS

A. Traffic Control: Maintain access for vehicular and pedestrian traffic as required for other construction activities.

PART 2 - PRODUCTS

2.1 FORMS

A. Form Materials: Plywood, metal, metal-framed plywood, or other approved panel-type materials to provide full-depth, continuous, straight, smooth exposed surfaces.
1. Use flexible or curved forms for curves of a radius 100 feet (30.5 m) or less.

B. Form-Release Agent: Commercially formulated form-release agent that will not bond with, stain, or adversely affect concrete surfaces and will not impair subsequent treatments of concrete surfaces.

2.2 STEEL REINFORCEMENT

A. Reinforcement Bars: ASTM A 615/A 615M, Grade 60 (Grade 420), deformed

B. Steel Bar Mats: ASTM A 184/A 184M; with ASTM A 615/A 615M, Grade 60 (Grade 420), deformed bars; assembled with clips

C. Plain Steel Wire: ASTM A 82, as drawn

D. Epoxy-Coated Wire: ASTM A 884/A 884M, Class A coated, plain steel

E. Joint Dowel Bars: Plain steel bars, ASTM A 615/A 615M, Grade 60 (Grade 420). Cut bars true to length with ends square and free of burrs.

F. Bar Supports: Bolsters, chairs, spacers, and other devices for spacing, supporting, and fastening reinforcement bars, welded wire fabric, and dowels in place. Manufacture bar supports according to CRSI's "Manual of Standard Practice" from steel wire, plastic, or pre-cast concrete or fiber-reinforced concrete of greater compressive strength than concrete, and as follows:
1. Equip wire bar supports with sand plates or horizontal runners where base material will not support chair legs.

G. Epoxy Repair Coating: Liquid two-part epoxy repair coating, compatible with epoxy coating on reinforcement.

2.3 CONCRETE MATERIALS

A. General: Use the same brand and type of cementitious material from the same Manufacturer throughout the Project.

B. Portland cement: ASTM C 150, Type I or II.
1. Fly Ash: ASTM C 618, Class F or C

C. Aggregate: ASTM C 33, uniformly graded, from a single source, with coarse aggregate as follows:Class: 4M.
1. Maximum Aggregate Size: 1 inch (25 mm) nominal
2. Do not use fine or coarse aggregates containing substances that cause spalling.

D. Water: ASTM C 94.

2.4 ADMIXTURES

A. General: Admixtures certified by Manufacturer to contain not more than 0.1 percent water-soluble chloride ions by mass of cement and to be compatible with other admixtures.

B. Air-Entraining Admixture: ASTM C 260.

2.5 CURING MATERIALS

A. Absorptive Cover: AASHTO M 182, Class 2, burlap cloth made from jute or kenaf, weighing approximately 9 oz./sq. yd. (305 g/sq. m) dry.

B. Moisture-Retaining Cover: ASTM C 171, polyethylene film or white burlap-polyethylene sheet.

C. Water: Potable.

D. Evaporation Retarder: Waterborne, monomolecular film forming, manufactured for application to fresh concrete.

E. Clear Solvent-Borne Liquid-Membrane-Forming Curing Compound: ASTM C 309, Type 1, Class B.

F. Available Products: Subject to compliance with requirements, products that may be incorporated into the Work include, but are not limited to, the following:

1. Evaporation Retarder:
   a. Cimfilm; Axim Concrete Technologies
   b. Finishing Aid Concentrate; Burke Group, LLC (The)
   c. Spray-Film; ChemMasters
   d. Aquafilm; Conspec Marketing & Manufacturing Co., Inc.
   e. Sure Film; Dayton Superior Corporation
   f. Eucobar; Euclid Chemical Co.
   g. Vapor Aid; Kaufman Products, Inc.
   h. Lambco Skin; Lambert Corporation
   i. E-Con; L&M Construction Chemicals, Inc.
   j. Confilm; Master Builders, Inc.
   k. Waterhold; Metalcrete Industries
   l. Rich Film; Richmond Screw Anchor Co.
   m. SikaFilm; Sika Corporation
   n. Finishing Aid; Symons Corporation
   o. Certi-Vex EnvioAssist; Vexcon Chemicals, Inc.
2. Clear Solvent-Borne Liquid-Membrane-Forming Curing Compound:
   a. AH Curing Compound #2 DR; Anti-Hydro International, Inc.
   b. Res-X Cure All Resin; Burke Group, LLC (The)
   c. RX Cure; Conspec Marketing & Manufacturing Co., Inc.
   d. Day-Chem Rez Cure; Dayton Superior Corporation
   e. Kurez DR; Euclid Chemical Co.
   f. Nitocure S; Fosroc
   g. #64 Resin Cure; Lambert Corporation
   h. L&M Cure DR; L&M Construction Chemicals, Inc.
   i. 3100-Clear; W. R. Meadows, Inc.
   j. Seal N Kure FDR; Metalcrete Industries
   k. Rich Cure; Richmond Screw Anchor Co.
   l. Resi-Chem C309; Symons Corporation
   m. Horncure 30; Tamms Industries Co., Div. of LaPorte Construction Chemicals North America, Inc.
   n. Uni Res 150; Unitex
   o. Certi-Vex RC; Vexcon Chemicals, Inc.

2.6 RELATED MATERIALS

A. Expansion- and Isolation-Joint-Filler Strips: ASTM D 1751, asphalt-saturated cellulosic fiber.

B. Expansion- and Isolation-Joint-Filler Strips: ASTM D 1752, cork or self-expanding cork.

C. Expansion- and Isolation-Joint-Filler Strips: ASTM D 1751, asphalt-saturated cellulosic fiber, or ASTM D 1752, cork or self-expanding cork.

D. Bonding Agent: ASTM C 1059, Type II, non-redispersible, acrylic emulsion or styrene butadiene.

E. Epoxy Bonding Adhesive: ASTM C 881, two-component epoxy resin, capable of humid curing and bonding to damp surfaces, of class and grade to suit requirements, and as follows:
1. Type II, non-load bearing, for bonding freshly mixed concrete to hardened concrete
2. Types I and II, non-load bearing, for bonding hardened or freshly mixed concrete to hardened concrete
3. Types IV and V, load bearing, for bonding hardened or freshly mixed concrete to hardened concrete

F. Available Products: Subject to compliance with requirements.

2.7 CONCRETE MIXES

A. Prepare design mixes, proportioned according to ACI 211.1 and ACI 301, for each type and strength of normal-weight concrete determined by either laboratory trial mixes or field experience.

B. Owner will hire a qualified independent testing agency for preparing and reporting proposed mix designs for the trial batch method.

C. Proportion mixes to provide concrete with the following properties:
1. Compressive Strength (28 Days): 3500 psi (24.1 MPa)
2. Maximum Water-Cementitious Materials Ratio: 0.50
3. Slump Limit: 4 inches (100 mm)

D. Cementitious Materials: Limit percentage, by weight, of cementitious materials other than Portland cement in concrete as follows:
1. Fly Ash: 20 percent
2. Combined Fly Ash and Pozzolan: 20 percent

E. Add air-entraining admixture at Manufacturer's prescribed rate to result in concrete at point of placement having an air content of 2.5 to 4.5 percent.

F. Add air-entraining admixture at Manufacturer's prescribed rate to result in concrete at point of placement having an air content as follows within a tolerance of plus or minus 1.5 percent:
1. Air Content: 5.5 percent for 1-1/2-inch (38-mm) maximum aggregate
2. Air Content: 6.0 percent for 1-inch (25-mm) maximum aggregate
3. Air Content: 6.0 percent for 3/4-inch (19-mm) maximum aggregate

2.8 CONCRETE MIXING

A. Ready-Mixed Concrete: Comply with requirements and with ASTM C 94.

PART 3 - EXECUTION

3.1 PREPARATION

A. Proof-roll prepared sub-base surface to check for unstable areas and verify need for additional compaction. Proceed with pavement only after nonconforming conditions have been corrected and subgrade is ready to receive pavement.

B. Remove loose material from compacted sub-base surface immediately before placing concrete.

3.2 EDGE FORMS AND SCREED CONSTRUCTION

A. Set, brace, and secure edge forms, bulkheads, and intermediate screed guides for pavement to required lines, grades, and elevations. Install forms to allow continuous progress of work and so forms can remain in place at least 24 hours after concrete placement.

B. Clean forms after each use and coat with form release agent to ensure separation from concrete without damage.

3.3 STEEL REINFORCEMENT

A. General: Comply with CRSI's "Manual of Standard Practice" for fabricating reinforcement and with recommendations in CRSI's "Placing Reinforcing Bars" for placing and supporting reinforcement.
   1. Apply epoxy repair coating to uncoated or damaged surfaces of epoxy-coated reinforcement.

B. Clean reinforcement of loose rust and mill scale, earth, ice, or other bond-reducing materials.

C. Arrange, space, and securely tie bars and bar supports to hold reinforcement in position during concrete placement. Maintain minimum cover to reinforcement.

D. Install fabricated bar mats in lengths as long as practicable. Handle units to keep them flat and free of distortions. Straighten bends, kinks, and other irregularities, or replace units as required before placement. Set mats for a minimum 2-inch (50-mm) overlap to adjacent mats.

3.4 JOINTS

A. General: Construct construction, isolation, and contraction joints and tool edgings true to line with faces perpendicular to surface plane of concrete. Construct transverse joints at right angles to centerline, unless otherwise indicated.
   1. When joining existing pavement, place transverse joints to align with previously placed joints, unless otherwise indicated.

B. Construction Joints: Set construction joints at side and end terminations of pavement and at locations where pavement operations are stopped for more than one-half hour, unless pavement terminates at isolation joints.

1. Provide preformed galvanized steel or plastic keyway-section forms or bulkhead forms with keys, unless otherwise indicated. Embed keys at least 1-1/2 inches (38 mm) into concrete.
2. Continue reinforcement across construction joints, unless otherwise indicated. Do not continue reinforcement through sides of pavement strips, unless otherwise indicated.
3. Provide tie bars at sides of pavement strips where indicated.
4. Use a bonding agent at locations where fresh concrete is placed against hardened or partially hardened concrete surfaces.
5. Use epoxy bonding adhesive at locations where fresh concrete is placed against hardened or partially hardened concrete surfaces.

C. Isolation Joints: Form isolation joints of preformed joint-filler strips abutting concrete curbs, catch basins, manholes, inlets, structures, walks, other fixed objects, and where indicated.

1. Locate expansion joints at intervals of 50 feet (15.25 m), unless otherwise indicated.
2. Extend joint fillers full width and depth of joint.
3. Terminate joint filler less than 1/2 inch (12 mm) or more than 1 inch (25 mm) below finished surface if joint sealant is indicated, or as suggested by Manufacturer.
4. Place top of joint filler flush with finished concrete surface if joint sealant is not indicated.
5. Furnish joint fillers in one-piece lengths. Where more than one length is required, lace or clip joint-filler sections together.
6. Protect top edge of joint filler during concrete placement with metal, plastic, or other temporary preformed cap. Remove protective cap after concrete has been placed on both sides of joint.

D. Install dowel bars and support assemblies at joints where indicated. Lubricate or asphalt-coat one-half of dowel length to prevent concrete bonding to one side of joint.

E. Contraction Joints: Form weakened-plane contraction joints, sectioning concrete into areas as indicated. Construct contraction joints for a depth equal to at least one-fourth of the concrete thickness, as follows:

1. Grooved Joints: Form contraction joints after initial floating by grooving and finishing each edge of joint with groover tool to the following radius. Repeat grooving of contraction joints after applying surface finishes. Eliminate groover marks on concrete surfaces.
   a. Radius: 1/4 inch (6 mm)
2. Sawed Joints: Form contraction joints with power saws equipped with shatter-proof abrasive or diamond-rimmed blades. Cut 1/8-inch- (3-mm-) wide joints into concrete when cutting action will not tear, abrade, or otherwise damage surface and before developing random contraction cracks.

F. Edging: Tool edges of pavement, gutters, curbs, and joints in concrete after initial floating with an edging tool to the following radius. Repeat tooling of edges after applying surface finishes. Eliminate tool marks on concrete surfaces.
   1. Radius: 1/4 inch (6 mm)

3.5 CONCRETE PLACEMENT

A. Inspection: Before placing concrete, inspect and complete formwork installation, reinforcement steel, and items to be embedded or cast in. Notify other trades to permit installation of their work.

B. Remove snow, ice, or frost from sub-base surface and reinforcement before placing concrete. Do not place concrete on frozen surfaces.

C. Moisten sub-base to provide a uniform dampened condition at the time concrete is placed. Do not place concrete around manholes or other structures until they are at the required finish elevation and alignment.

D. Comply with requirements and with recommendations in ACI 304R for measuring, mixing, transporting, and placing concrete.

E. Do not add water to concrete during delivery, at Project site, or during placement.

F. Deposit and spread concrete in a continuous operation between transverse joints. Do not push or drag concrete into place or use vibrators to move concrete into place.

G. Consolidate concrete by mechanical vibrating equipment supplemented by hand-spading, rodding, or tamping. Use equipment and procedures to consolidate concrete according to recommendations in ACI 309R.
   1. Consolidate concrete along face of forms and adjacent to transverse joints with an internal vibrator. Keep vibrator away from joint assemblies, reinforcement, or side forms. Use only square-faced shovels for hand-spreading and consolidation. Consolidate with care to prevent dislocating reinforcement, dowels, and joint devices.

H. Place concrete in two operations; strike off initial pour for entire width of placement and to the required depth below finish surface. Lay welded wire fabric or fabricated bar mats immediately in final position. Place top layer of concrete, strike off, and screed.
   1. Remove and replace portions of bottom layer of concrete that have been placed more than 15 minutes without being covered by top layer, or use bonding agent if approved by Architect.

I. Screed pavement surfaces with a straightedge and strike off. Commence initial floating using bull floats or darbies to form an open textured and uniform surface plane before excess moisture or bleed water appears on the surface. Do not further disturb concrete surfaces before beginning finishing operations or spreading dry-shake surface treatments.

J. Curbs and Gutters: When automatic machine placement is used for curb and gutter placement, submit revised mix design and laboratory test results that meet or exceed requirements. Produce curbs and gutters to required cross section, lines, grades, finish, and

jointing as specified for formed concrete. If results are not approved, remove and replace with formed concrete.

K. Slip-Form Pavers: When automatic machine placement is used for pavement, submit revised mix design and laboratory test results that meet or exceed requirements. Produce pavement to required thickness, lines, grades, finish, and jointing as required for formed pavement.
1. Compact sub-base and prepare subgrade of sufficient width to prevent displacement of paver machine during operations.

L. When adjoining pavement lanes are placed in separate pours, do not operate equipment on concrete until pavement has attained 85 percent of its 28-day compressive strength.

M. Cold-Weather Placement: Comply with ACI 306.1 and as follows. Protect concrete work from physical damage or reduced strength that could be caused by frost, freezing actions, or low temperatures.
1. When air temperature has fallen to or is expected to fall below 40 deg F (4.4 deg C), uniformly heat water and aggregates before mixing to obtain a concrete mixture temperature of not less than 50 deg F (10 deg C) and not more than 80 deg F (27 deg C) at point of placement.
2. Do not use frozen materials or materials containing ice or snow.
3. Do not use calcium chloride, salt, or other materials containing antifreeze agents or chemical accelerators, unless otherwise specified and approved in mix designs.

N. Hot-Weather Placement: Place concrete according to recommendations in ACI 305R and as follows when hot-weather conditions exist:
1. Cool ingredients before mixing to maintain concrete temperature at time of placement below 90 deg F (32 deg C). Chilled mixing water or chopped ice may be used to control temperature, provided water equivalent of ice is calculated to total amount of mixing water. Using liquid nitrogen to cool concrete is Contractor's option.
2. Cover reinforcement steel with water-soaked burlap so steel temperature will not exceed ambient air temperature immediately before embedding in concrete.
3. Fog-spray forms, reinforcement steel, and subgrade just before placing concrete. Keep subgrade moisture uniform without standing water, soft spots, or dry areas.

3.6 CONCRETE FINISHING

A. General: Wetting of concrete surfaces during screeding, initial floating, or finishing operations is prohibited.

B. Float Finish: Begin the second floating operation when bleed-water sheen has disappeared and the concrete surface has stiffened sufficiently to permit operations. Float surface with power-driven floats, or by hand floating if area is small or inaccessible to power units. Finish surfaces to true planes. Cut down high spots, and fill low spots. Re-float surface immediately to uniform granular texture.
1. Medium-to-Coarse-Textured Broom Finish: Provide a coarse finish by striating float-finished concrete surface 1/16 to 1/8 inch (1.6 to 3 mm) deep with a stiff-bristled broom, perpendicular to line of traffic.

3.7 SPECIAL FINISHES

A. Refer to Architectural Plans for Special Finishes.

3.8 CONCRETE PROTECTION AND CURING

A. General: Protect freshly placed concrete from premature drying and excessive cold or hot temperatures. Comply with ACI 306.1 for cold-weather protection and follow recommendations in ACI 305R for hot-weather protection during curing.

B. Evaporation Retarder: Apply evaporation retarder to concrete surfaces if hot, dry, or windy conditions cause moisture loss approaching 0.2 lb/sq. ft. x h (1 kg/sq. m x h) before and during finishing operations. Apply according to Manufacturer's written instructions after placing, screeding, and bull floating or darbying concrete, but before float finishing.

C. Begin curing after finishing concrete, but not before free water has disappeared from concrete surface.

D. Curing Methods: Cure concrete by moisture curing, moisture-retaining-cover curing, curing compound, or a combination of these as follows:
   1. Moisture Curing: Keep surfaces continuously moist for not less than seven days with the following materials:
      a. Water
      b. Continuous water-fog spray
      c. Absorptive cover, water saturated, and kept continuously wet. Cover concrete surfaces and edges with 12-inch (300-mm) lap over adjacent absorptive covers.
   2. Moisture-Retaining-Cover Curing: Cover concrete surfaces with moisture-retaining cover for curing concrete, placed in widest practicable width, with sides and ends lapped at least 12 inches (300 mm), and sealed by waterproof tape or adhesive. Immediately repair any holes or tears during curing period using cover material and waterproof tape.
   3. Curing Compound: Apply uniformly in continuous operation by power spray or roller according to Manufacturer's written instructions. Recoat areas subjected to heavy rainfall within three hours after initial application. Maintain continuity of coating and repair damage during curing period.

3.9 FIELD QUALITY CONTROL

A. Testing Agency: Owner will engage a qualified independent testing and inspection agency to sample materials, perform tests, and submit test reports during concrete placement according to requirements specified in this Article.

B. Testing Services: Testing shall be performed according to the following requirements:
   1. Sampling Fresh Concrete: Representative samples of fresh concrete shall be obtained according to ASTM C 172, except modified for slump to comply with ASTM C 94.

2. Slump: ASTM C 143; one test at point of placement for each compressive-strength test, but not less than one test for each day's pour of each type of concrete. Additional tests will be required when concrete consistency changes.
3. Air Content: ASTM C 231, pressure method; one test for each compressive-strength test, but not less than one test for each day's pour of each type of air-entrained concrete.
4. Concrete Temperature: ASTM C 1064; one test hourly when air temperature is 40 deg F (4.4 deg C) and below and when 80 deg F (27 deg C) and above, and one test for each set of compressive-strength specimens.
5. Compression Test Specimens: ASTM C 31/C 31M; one set of four standard cylinders for each compressive-strength test, unless otherwise indicated. Cylinders shall be molded and stored for laboratory-cured test specimens unless field-cured test specimens are required.
6. Compressive-Strength Tests: ASTM C 39; one set for each day's pour of each concrete class exceeding 5 cu. yd. (4 cu. m), but less than 25 cu. yd. (19 cu. m), plus one set for each additional 50 cu. yd. (38 cu. m). One specimen shall be tested at 7 days and two specimens at 28 days; one specimen shall be retained in reserve for later testing if required.
7. When frequency of testing will provide fewer than five compressive-strength tests for a given class of concrete, testing shall be conducted from at least five randomly selected batches or from each batch if fewer than five are used.
8. When total quantity of a given class of concrete is less than 50 cu. yd. (38 cu. m), Architect may waive compressive-strength testing if adequate evidence of satisfactory strength is provided.
9. When strength of field-cured cylinders is less than 85 percent of companion laboratory-cured cylinders, current operations shall be evaluated and corrective procedures shall be provided for protecting and curing in-place concrete.
10. Strength level of concrete will be considered satisfactory if averages of sets of three consecutive compressive-strength test results equal or exceed specified compressive strength and no individual compressive-strength test result falls below specified compressive strength by more than 500 psi (3.4 MPa).

C. Test results shall be reported in writing to Architect, Concrete Manufacturer, and Contractor within 24 hours of testing. Reports of compressive-strength tests shall contain Project identification name and number, date of concrete placement, name of concrete testing agency, concrete type and class, location of concrete batch in pavement, design compressive strength at 28 days, concrete mix proportions and materials, compressive breaking strength, and type of break for both 7- and 28-day tests.

D. Nondestructive Testing: Impact hammer, sonoscope, or other nondestructive device may be permitted by Architect but will not be used as the sole basis for approval or rejection.

E. Additional Tests: Testing agency shall make additional tests of the concrete when test results indicate slump, air entrainment, concrete strengths, or other requirements have not been met, as directed by Architect. Testing agency may conduct tests to determine adequacy of concrete by cored cylinders complying with ASTM C 42, or by other methods as directed.

3.10 REPAIRS AND PROTECTION

A. Remove and replace concrete that is broken, damaged, or defective, or does not meet requirements in this Section.

B. Drill test cores where directed by Architect when necessary to determine magnitude of cracks or defective areas. Fill drilled core holes in satisfactory areas with Portland cement concrete bonded to with epoxy adhesive.

END OF SECTION

SECTION 02764

PAVEMENT JOINT SEALANTS

PART 1 - GENERAL

1.1 RELATED DOCUMENTS

A. Drawings and general provisions of the Contract, including General and Supplementary Conditions and Division 1 Specification Sections, apply to this Section.

1.2 SUMMARY

A. This Section includes the following:
   1. Expansion and contraction joints within Portland cement concrete pavement
   2. Joints between Portland cement concrete and asphalt pavement

B. Related Sections include the following:
   1. Division 2 Section "Hot-Mix Asphalt Paving" for constructing joints between concrete and asphalt pavement
   2. Division 2 Section “Cement Concrete “for constructing joints in concrete paving
   3. Division 7 Section "Joint Sealants" for sealing non-traffic and traffic joints in locations not specified in this Section

1.3 SUBMITTALS

A. Product Data: For each joint-sealant product indicated.

B. Product Certificates: For each type of joint sealant and accessory, signed by product Manufacturer.

C. Compatibility and Adhesion Test Reports: From sealant Manufacturer, indicating the following:
   1. Materials forming joint substrates and joint-sealant backings have been tested for compatibility and adhesion with joint sealants.
   2. Interpretation of test results and written recommendations for primers and substrate preparation needed for adhesion.

D. Product Test Reports: Based on evaluation of comprehensive tests performed by a qualified testing agency, for sealants.

1.4 QUALITY ASSURANCE

A. Installer Qualifications: An experienced Installer who has specialized in installing joint sealants similar in material, design, and extent to those indicated for this Project and whose work has resulted in joint-sealant installations with a record of successful in-service performance.

B. Source Limitations: Obtain each type of joint sealant through one source from a single Manufacturer.

1.5 DELIVERY, STORAGE, AND HANDLING

A. Deliver materials to Project site in original unopened containers or bundles with labels indicating Manufacturer, product name and designation, color, expiration date, pot life, curing time, and mixing instructions for multi-component materials.

B. Store and handle materials to comply with Manufacturer's written instructions to prevent their deterioration or damage due to moisture, high or low temperatures, contaminants, or other causes.

1.6 PROJECT CONDITIONS

A. Environmental Limitations: Do not proceed with installation of joint sealants under the following conditions:
1. When ambient and substrate temperature conditions are outside limits permitted by joint sealant Manufacturer
2. When ambient and substrate temperature conditions are outside limits permitted by joint sealant Manufacturer or are below 40 deg F (4.4 deg C)
3. When joint substrates are wet

B. Joint-Width Conditions: Do not proceed with installation of joint sealants where joint widths are less than that allowed by joint sealant Manufacturer for application indicated.

C. Joint-Substrate Conditions: Do not proceed with installation of joint sealants until contaminants capable of interfering with their adhesion are removed from joint substrates.

PART 2 - PRODUCTS

2.1 MATERIALS, GENERAL

A. Compatibility: Provide joint sealants, backing materials, and other related materials that are compatible with one another and with joint substrates under conditions of service and application, as demonstrated by joint sealant Manufacturer based on testing and field experience.

B. Colors of Exposed Joint Sealants: Match Architect's samples.

C. Colors of Exposed Joint Sealants: As indicated by referencing Manufacturer's designations.

D. Colors of Exposed Joint Sealants: As selected by Architect from Manufacturer's full range for this characteristic.

2.2 COLD-APPLIED JOINT SEALANTS

A. Type NS Silicone Sealant for Concrete: Single-component, low-modulus, neutral-curing, non-sag silicone sealant complying with ASTM D 5893 for Type NS.

B. Type SL Silicone Sealant for Concrete and Asphalt: Single-component, low-modulus, neutral-curing, self-leveling silicone sealant complying with ASTM D 5893 for Type SL.

C. Multi-component Low-Modulus Sealant for Concrete and Asphalt: Proprietary formulation consisting of reactive petropolymer and activator components producing a pourable, self-leveling sealant.

D. Available Products: Subject to compliance with requirements, cold-applied joint sealants that may be incorporated into the Work include, but are not limited to, the following:
   1. Type NS Silicone Sealant for Concrete:
      a. Roadsaver Silicone-SL; Crafco Inc.
      b. 888; Dow Corning
   2. Type SL Silicone Sealant for Concrete and Asphalt:
      a. 890-SL; Dow Corning
   3. Multi-component Low-Modulus Sealant for Concrete and Asphalt:
      a. SOF-SEAL; W.R. Meadows, Inc.

2.3 HOT-APPLIED JOINT SEALANTS

A. Elastomeric Sealant for Concrete: Single-component formulation complying with ASTM D 3406.

B. Sealant for Concrete and Asphalt: Single-component formulation complying with ASTM D 3405.

C. Available Products: Subject to compliance with requirements, hot-applied joint sealants that may be incorporated into the Work include, but are not limited to, the following:
   1. Elastomeric Sealant for Concrete:
      a. Superseal 444/777; Crafco, Inc.
      b. POLY-JET 3406; W.R. Meadows, Inc.
   2. Sealant for Concrete and Asphalt:
      a. ROADSAVER 221; Crafco Inc.
      b. Product #9005; Koch Materials Company
      c. Product #9030; Koch Materials Company
      d. SEALTIGHT HI-SPEC; W.R. Meadows, Inc.

2.4 JOINT-SEALANT BACKER MATERIALS

A. General: Provide joint-sealant backer materials that are non-staining; are compatible with joint substrates, sealants, primers, and other joint fillers; and are approved for applications indicated by joint sealant Manufacturer based on field experience and laboratory testing.

B. Round Backer Rod for Cold- and Hot-Applied Sealants: ASTM D 5249, Type 1, of diameter and density required to control sealant depths and prevent bottom-side adhesion of sealant.

C. Backer Strips for Cold- and Hot-Applied Sealants: ASTM D 5249; Type 2; of thickness and width required to control sealant depths, prevent bottom-side adhesion of sealant, and fill remainder of joint opening under sealant.

2.5 PRIMERS

A. Primers: Product recommended by joint sealant Manufacturer where required for adhesion of sealant to joint substrates indicated, as determined from preconstruction joint-sealant-substrate tests and field tests.

PART 3 - EXECUTION

3.1 EXAMINATION

A. Examine joints indicated to receive joint sealants, with Installer present, for compliance with requirements for joint configuration, installation tolerances, and other conditions affecting joint-sealant performance.

B. Proceed with installation only after unsatisfactory conditions have been corrected.

3.2 PREPARATION

A. Surface Cleaning of Joints: Clean out joints immediately before installing joint sealants to comply with joint sealant Manufacturer's written instructions.

B. Joint Priming: Prime joint substrates where indicated or where recommended in writing by joint sealant Manufacturer, based on preconstruction joint-sealant-substrate tests or prior experience. Apply primer to comply with joint sealant Manufacturer's written instructions. Confine primers to areas of joint-sealant bond; do not allow spillage or migration onto adjoining surfaces.

3.3 INSTALLATION OF JOINT SEALANTS

A. General: Comply with joint sealant Manufacturer's written installation instructions applicable to products and applications indicated, unless more stringent requirements apply.

B. Sealant Installation Standard: Comply with recommendations of ASTM C 1193 for use of joint sealants as applicable to materials, applications, and conditions indicated.

C. Install backer materials of type indicated to support sealants during application and at position required to produce cross-sectional shapes and depths of installed sealants relative to joint widths that allow optimum sealant movement capability.
   1. Do not leave gaps between ends of backer materials.
   2. Do not stretch, twist, puncture, or tear backer materials.
   3. Remove absorbent backer materials that have become wet before sealant application and replace them with dry materials.

D. Install sealants by proven techniques to comply with the following and at the same time backings are installed:
   1. Place sealants so they directly contact and fully wet joint substrates.
   2. Completely fill recesses provided for each joint configuration.
   3. Produce uniform, cross-sectional shapes and depths relative to joint widths that allow optimum sealant movement capability.

E. Tooling of Non-sag Sealants: Immediately after sealant application and before skinning or curing begins, tool sealants according to requirements specified below to form smooth, uniform beads of configuration indicated; to eliminate air pockets; and to ensure contact and adhesion of sealant with sides of joint.
   1. Remove excess sealants from surfaces adjacent to joint.
   2. Use tooling agents that are approved in writing by joint sealant Manufacturer and that do not discolor sealants or adjacent surfaces.

F. Provide joint configuration to comply with joint sealant Manufacturer's written instructions, unless otherwise indicated.

G. Provide recessed joint configuration for silicone sealants of recess depth and at locations indicated.

3.4 CLEANING

A. Clean off excess sealants or sealant smears adjacent to joints as the Work progresses by methods and with cleaning materials approved by Manufacturers of joint sealants and of products in which joints occur.

3.5 PROTECTION

A. Protect joint sealants during and after curing period from contact with contaminating substances and from damage resulting from construction operations or other causes so sealants are without deterioration or damage at time of Substantial Completion. If, despite such protection, damage or deterioration occurs, cut out and remove damaged or deteriorated joint sealants immediately so installations with repaired areas are indistinguishable from the original work.

END OF SECTION

SECTION 02780

DETECTABLE WARNING PAVERS

PART 1 - GENERAL

1.1 SUMMARY

A. Section Includes:
   1. Concrete pavers units
   2. Detectable warning pavers
   3. Sand bed and sand joint

B. Related Sections:
   1. Section 02923 - Landscape Grading: Preparation of subsoil for pavers.

1.2 REFERENCES

A. ASTM International:
   1. ASTM C33 - Standard Specification for Concrete Aggregates
   2. ASTM C144 - Standard Specification for Aggregate for Masonry Mortar
   3. ASTM C936 - Standard Specification for Solid Concrete Interlocking Paving Units

1.3 SYSTEM DESCRIPTION

A. Paving and Setting Bed: To accommodate pedestrian traffic.

1.4 SUBMITTALS

A. Section 01330 - Submittal Procedures: Requirements for submittals.

B. Shop Drawings: Indicate on shop drawings, layout of pavers, dimensions of paved areas, control joints, expansion joints, elevations, and affected adjacent construction.

C. Product Data: Submit characteristics of pavers unit, detectable warning pavers, dimensions, and special shapes.

D. Samples: Submit two samples of each Concrete pavers' size, illustrating style, size, color range and surface texture of units being provided.

E. Manufacturer's Installation Instructions: Submit substrate requirements and installation methods.

1.5 QUALIFICATIONS

A. Manufacturer: Company specializing in manufacturing Products specified in this section with minimum three years documented experience.

B. Installer: Company specializing in performing work of this section with minimum two years documented experience or approved by Manufacturer.

1.6 MOCKUP

A. Section 01400 - Quality Requirements: Requirements for mockup.

B. Construct mockup, 24 sq ft, including setting bed, pavers, joint sealers, control joint, expansion joint, and accessories to pattern indicated.

C. Locate where directed by Architect/Engineer.

D. Incorporate accepted mockup as part of Work.

1.7 EXTRA MATERIALS

A. Section 01700 - Execution Requirements: Spare parts and maintenance products.

B. Supply 10 of each pavers' size.

PART 2 - PRODUCTS

2.1 MANUFACTURERS

A. Manufacturers:
1. Belden Brick Model ADA Pavers
2. Pavestone Model Detectable Warning Pavers
3. ADA Solutions Inc. Model Cast-in-Place Composite Pavers Tiles
4. Substitutions: Section 01600 - Product Requirements

2.2 MATERIALS

A. Detectable Warning Pavers: Cast concrete with truncated domes Conforming to the following:
1. Type: ASTM C936, Hydraulically pressed concrete of 8,000 psi minimum, 28 day compressive strength
2. Air Entrained: 5 to 7 percent
3. Moisture Content: 7 percent
4. Moisture Absorption: 5 percent
5. Nominal Size: 3 7/8" x 7 13/16" x 2 3/8" inch
6. Style:
7. Color: Selected from Manufacturer's standard range
8. Shape: Rectangular

B. Sand for Setting Bed and Joint Filler: ASTM C144, clean washed river or bank sand.

C. Cast-In-Place Composite Pavers Tiles: In accordance with ADA Regulations for Detectable Warning on Curb Ramps. Raised truncated domes, Color and pattern as selected by Architect. The materials shall conform to the following specifications: Manufacturer ADA Solutions, Inc. Cast-In-Place Composite Pavers Tiles
   1. A homogenous glass and carbon reinforced composite which is colorfast and UV stable. The color of the tile is colored throughout and does not contain any type of paint coating to achieve the color.
   2. Strength: 20,000psi
   3. Slip resistance: exceeds 0.80 wet or dry

PART 3 - EXECUTION

3.1 EXAMINATION

A. Section 01300 - Administrative Requirements: Verification of existing conditions before starting work.

B. Verify that substrate is level or to correct gradient, smooth, capable of supporting pavers and imposed loads, and ready to receive Work of this section.

C. Verify gradients and elevations of substrate are correct.

3.2 PREPARATION

A. Treat soil with herbicide to retard plant growth.

3.3 INSTALLATION

A. Cast-In-Place Composite Pavers Tiles:
   1. Tile pavers units are to be used on new curb ramp locations. The panels can be pre-filled with concrete and set in place or pressed into place in the freshly poured concrete.

B. Detectable Warning Pavers:
   1. Excavate unsuitable, unstable or unconsolidated subgrade material and compact the area which is to receive the pave stones. Backfill, place and level the excavated area with a 4 inch minimum of a compacted structural base material.
   2. Spread sand evenly over prepared substrate surface to a maximum thickness of 1 ½ inches.
   3. Dampen and roller compact sand to level and even surface.
   4. Screed and scarify top 1/2 inch of sand.
   5. Place pavers units in parquet pattern, from straight reference edge. Place half units at edge and interruptions. Maintain tight and evenly spaced joints.
      a. Joint Width: 1/8 inches
   6. Sprinkle sand over surface and sweep into joints. Moisten joints and recover with additional sand until firm joints are achieved..
   7. Tamp pave stones with a plate compactor, uniformly level, true to grade and free of movement.

8. Spread sand to 1/8” thickness over entire paving area.
9. Make one more pass with plate compactor to fill joints with sand. Remove excess sand.

END OF SECTION

SECTION 02821

CHAIN LINK FENCES AND GATES

PART 1 - GENERAL

1.1 SUMMARY

A. Section Includes:
1. Fence framework, fabric, and accessories
2. Excavation for post bases
3. Concrete foundation for posts
4. Manual gates and related hardware
5. Privacy slats

B. Related Sections:
1. Division 2 – Site Work
2. Division 3 – Concrete

1.2 REFERENCES

A. ASTM International:
1. ASTM A121 - Standard Specification for Zinc-Coated (Galvanized) Steel Barbed Wire
2. ASTM A123/A123M - Standard Specification for Zinc (Hot-Dip Galvanized) Coatings on Iron and Steel Products
3. ASTM A153/A153M - Standard Specification for Zinc Coating (Hot-Dip) on Iron and Steel Hardware
4. ASTM A392 - Standard Specification for Zinc-Coated Steel Chain-Link Fence Fabric
5. ASTM C94 - Standard Specification for Ready-Mixed Concrete
6. ASTM F567 - Standard Practice for Installation of Chain-Link Fence
7. ASTM F900 - Standard Specification for Industrial and Commercial Swing Gates
8. ASTM F1083 - Standard Specification for Pipe, Steel, Hot-Dipped Zinc-Coated (Galvanized) Welded, for Fence Structures
9. ASTM F1184 - Standard Specification for Industrial and Commercial Horizontal Slide Gates

B. Chain Link Fence Manufacturers Institute:
1. CLFMI - Product Manual

1.3 PERFORMANCE REQUIREMENTS

A. Structural Performance: Provide chain-link fences and gates capable of withstanding the effects of gravity loads and the following loads and stresses within limits and under conditions indicated:

1. Minimum Post Size and Maximum Spacing for Wind Velocity Pressure: Determine based on mesh size and pattern specified, and on the following minimum design wind pressures and according to CLFMI WLG 2445:
   a. Consult a structural engineer experienced in design wind loads applicable to Project. Verify compliance with codes. See Evaluations.
   b. Wind Speed: 120 mph
   c. Fence Height: Six Feet
   d. Line Post Spacing: At intervals not exceeding 10 feet
   e. Line Post Group: IA, ASTM F 1043, Schedule 40 steel pipe
   f. Wind Exposure Category: C

B. Lightning Protection System: Maximum grounding-resistance value of 25 ohms under normal dry conditions.

1.4 SYSTEM DESCRIPTION

A. Fence Height: Six (6) feet nominal.

1.5 SUBMITTALS

A. Section 01330 - Submittal Procedures: Requirements for submittals.

B. Shop Drawings: Show locations of fences, gates, posts, rails, tension wires, details of extended posts, extension arms, gate swing, or other operation, hardware, and accessories. Indicate materials, dimensions, sizes, weights, and finishes of components. Include plans, gate elevations, sections, details of post anchorage, attachment, bracing, and other required installation and operational clearances.
   1. For installed products indicated to comply with design loads, include structural analysis data.

C. Samples for Verification: For each type of chain-link fence and gate indicated.

D. Qualification Data: For Installer.

E. Product Data: Submit data on gates, fabric, posts, accessories, fittings and hardware.

F. Samples: Submit two samples of gates, fence fabric, illustrating construction and finish.

G. Manufacturer's Installation Instructions: Submit installation requirements, post foundation anchor bolt templates, and maintenance manual.

1.6 CLOSEOUT SUBMITTALS

A. Section 01700 - Execution Requirements: Closeout procedures.

B. Project Record Documents: Accurately record actual locations of property perimeter posts relative to property lines and easements.

C. Operation and Maintenance Data: Procedures for submittals.

1.7 QUALITY ASSURANCE

A. Supply material in accordance with CLFMI - Product Manual.

B. Perform installation in accordance with ASTM F567.

C. Maintain one copy copies of each document on site.

D. Field Measurements: Verify layout information for chain-link fences and gates shown on Drawings in relation to property survey and existing structures. Verify dimensions by field measurements.

1.8 QUALIFICATIONS

A. Manufacturer: Company specializing in manufacturing Products specified in this section with minimum three years documented experience.

B. Installer: Installer Qualifications: An experienced Installer who has completed chain-link fences and gates similar in material, design, and extent to those indicated for this Project and whose work has resulted in construction with a record of successful in-service performance. Company specializing in performing work of this section with minimum three years documented experience and approved by Manufacturer.

1.9 DELIVERY, STORAGE AND HANDLING

A. Section 01600 - Product Requirements: Requirements for transporting, handling, storing, and protecting products.

B. Deliver fence fabric and accessories in packed cartons or firmly tied rolls.

C. Identify each package with Manufacturer’s name.

D. Store fence fabric and accessories in secure and dry place.

PART 2 - PRODUCTS

2.1 MANUFACTURERS

A. Manufacturers:
1. Master Halco
2. Merchants Metal
3. Substitutions: Section 01600 - Product Requirements

2.2 MATERIALS

A. Framing (Steel): ASTM F1083 Schedule 40 galvanized steel pipe, welded construction, minimum yield strength of 25 ksi; coating conforming to ASTM F1043 Type A on pipe exterior and interior.

B. Fabric Wire (Steel): ASTM A392 zinc coated wire fabric. Weight of Metallic (Zinc) Coating: ASTM A 392, Type II, Class 1, 1.2 oz./sq. ft. with zinc coating applied after weaving.

C. Barbed Wire: ASTM A121 galvanized steel; 12 gage thick wire, 3 strands, 4 points at 3" inch oc.

D. Concrete: ASTM C94; Normal Portland Cement, 3,000 psi strength at 28 days, 3 inch slump; nominal sized coarse aggregate.

2.3 COMPONENTS

A. Line Posts: 2.38 inch diameter.

B. Corner and Terminal Posts: 3.5 inch.

C. Gate Posts: 4.5 inch diameter.

D. Top and Brace Rail: 1.66 inch diameter, plain end, sleeve coupled.

E. Gate Frame: 1.66 inch diameter for welded and fittings and truss rod fabrication.

F. Fabric: 2 inch diamond mesh interwoven wire, 9 gage thick, barbed and barded, top salvage twisted tight, bottom selvage twisted tight.

G. Tension Wire: 6 gage thick steel, single strand.

H. Tension Band: thick steel.

I. Tension Strap: thick steel.

J. Tie Wire: According to ASTM F 626. Aluminum alloy steel wire.

2.4 ACCESSORIES

A. Caps: Cast steel galvanized; sized to post diameter, set screw retainer.
1. Line post caps with loop to receive tension wire or top rail.

B. Fittings: Sleeves, bands, clips, rail ends, tension bars, fasteners and fittings; galvanized steel.
1. Tension Bars: Steel, length not less than 2 inches shorter than full height of chain-link fabric. Provide one bar for each gate and end post, and two for each corner and pull post, unless fabric is integrally woven into post.
2. Truss Rod Assemblies: Steel, hot-dip galvanized after threading rod and turnbuckle or other means of adjustment.
3. Standard Round Wire Ties: For attaching chain-link fabric to posts, rails, and frames, complying with the following:
a. Hot-Dip Galvanized Steel: 0.148-inch- diameter wire; galvanized coating thickness matching coating thickness of chain-link fence fabric.

C. Extension Arms: Galvanized pressed steel, to accommodate 3 strands of barbed wire, single arm, sloped to 45 degrees. Barbed Wire Arms: Pressed steel or cast iron, with clips, slots, or other means for attaching strands of barbed wire, integral with post cap; for each post, unless otherwise indicated, and as follows:
1. Line posts with arms that accommodate top rail or tension wire.
2. Extended posts are indicated at fence corner posts, unless Corner arms are indicated and approved.
3. Type I, single slanted arm.

D. Gate Hardware: Center gate stop and drop rod, Mechanical keepers; three 180 degree gate hinges for each leaf and hardware for padlock keyed to match hardware specified in Section 08710. Hardware: Latches permitting operation from both sides of gate, hinges, center gate stops and keepers for each gate leaf more than 5 feet wide. Fabricate latches with integral eye openings for padlocking; padlock accessible from both sides of gate.

E. Barbed Wire: Zinc-Coated Steel Barbed Wire: Comply with ASTM A 121, Chain-Link Fence grade for the following three-strand barbed wire:
1. Standard Size and Construction: 0.099-inch- diameter line wire with 0.080-inch-diameter, 2-point round barbs spaced not more than 4 inches o.c.

F. Fence Grounding:
1. Conductors: Bare, solid wire for No. 6 AWG and smaller; stranded wire for No. 4 AWG and larger.
   a. Material above Finished Grade: Copper
   b. Material on or below Finished Grade: Copper
   c. Bonding Jumpers: Braided copper tape, 1 inch wide, woven of No. 30 AWG bare copper wire, terminated with copper ferrules
2. Connectors and Grounding Rods: Comply with UL 467.
   a. Connectors for Below-Grade Use: Exothermic welded type
   b. Grounding Rods: Copper-clad steel
      1) Size: 5/8 by 96 inches

2.5 GATES

A. General:
1. Gate Types, Opening Widths and Directions of Operation: As indicated on Drawings
2. Factory assemble gates
3. Design gates for operation by one person

B. Swing Gates:
1. Fabricate gates to permit 180 degree swing.
2. Gates Construction: ASTM F900 with welded corners. Use of corner fittings is not permitted.

C. Sliding Gates:
1. Framing and Posts: ASTM F1184, Classification: Type II Cantilever Slide, Class 1 with external roller assemblies.

2. Rollers for overhead and cantilever sliding gates: Bearing type. Furnish non-sealed bearings with grease fitting for periodic maintenance.
3. Secure rollers to post or frame without welding.

D. Cantilever Sliding Gates:

1. Fabricate gate leaf frames and tracks as required to meet performance requirements of ASTM F1184 and specified performance requirements.
2. Frame Members: galvanized steel tubing with outside dimensions and weight according to ASTM F 1184, welded assembly forming rigid, one piece unit.
3. Install fabric securely stretched and held in center of tubing.
4. Brace cantilever overhang frames with 3/8 inch brace rods. For gate leaf sizes greater than 23 feet, fabricate with additional lateral support rail welded adjacent to top and bottom horizontal rails.
5. Provide minimum overhang for each leaf opening size as per Manufacturers requirements:

Opening	Overhang
Up to 10’-0” (3.0 m)	6’-6” (2.0 m)
10’-0” -14’-0” (3.0 m - 4.3 m)	7’-6” (2.3 m)
14’-1” -22’-0” (4.4 m - 6.7 m)	10’-0” (3.0 m)
22’-1” - 30’-0” (6.8 - 9.1 m)	12’-0” (3.7 m)

6. Track and Rail: Combined, integral track and rail, galvanized steel with outside dimensions and weight according to ASTM F 1184.
7. Roller Track Assembly: As required per ASTM F 1184 for Type II, Class 1 gates. Two swivel type, zinc, die cast trucks having four, sealed lubricant ball bearing wheels minimum 2 inches diameter by 9/16 inches width designed for same reaction load as rail. Provide two side-rolling wheels for each gate leaf to maintain alignment of truck in track.
8. Fasten trucks to post brackets by minimum 7/8 inch (22 mm) diameter, 1/2 inch (13 mm) shank ball bolts.
9. Provide galvanized steel guide wheel assemblies consisting of two rubber wheels of minimum 4 inch (100 mm) diameter with oil-impregnated bearings for each supporting post.
10. Attach guide wheel assembly to post so bottom horizontal member rolls between wheels and permitting adjustment to maintain plumb gate frames and proper alignment.

2.6 FINISHES

A. Components and Fabric: Galvanized to ASTM A123/A123M; ASTM A153/A153M for components; ASTM A392 for fabric; 2.0 oz/sq ft coating.

B. Hardware: Galvanized to ASTM A153/A153M, 2.0 oz/sq ft coating.

C. Accessories: Same finish as framing.

PART 3 - EXECUTION

3.1 GENERAL INSTALLATION

A. Demolition: On the state's property and at the new fence, the Contractor shall clear an unobstructive area of 4' of the State's property line. The Contractor shall coordinate fence installation with the State and Owners representative.

B. Clearing and Grading: The Contractor shall do all clearing of brush, rocks and debris which may be necessary for the installation of fencing.

C. Stake Corners: The State will stake out the locations for corner posts and terminal posts in this installation. The fencing panels between corner and terminal posts shall generally follow the finished ground elevations. The Contractor shall grade off irregularities necessary to limit the variation of grade under the bottom of the fence to a distance no greater than 6" or less than 2".

D. The finished fence shall be plumb, taut, true to line and complete in every detail. All work shall be done by experienced workmen.

E. Excavated material from footings shall be spread neatly and uniformly to leave the area adjacent to the fence as slightly as possible.

3.2 INSTALLATION

A. Install framework, fabric, accessories and gates in accordance with ASTM F567.

B. Set intermediate, terminal, and gate posts plumb, in concrete footings with top of footing 1 ½" inches above finish grade. Slope top of concrete for water runoff.

C. Line Post Footing Depth Below Finish Grade: ASTM F567. Drill holes in firm, undisturbed or compacted soil. Holes shall have diameter 4 times greater than outside dimension of post, and depths approximately 6" deeper than post bottom. Excavate deeper as required for adequate support in soft and loose soils, and for posts with heavy lateral loads. Set post bottom 24" below surface when in firm, undisturbed soil. Place concrete around posts in a continuous pour. Trowel finish around post and slope to direct water away from posts.

D. Corner and Terminal Post Footing Depth Below Finish Grade: ASTM F567. Drill holes in firm, undisturbed or compacted soil. Holes shall have diameter 4 times greater than outside dimension of post, and depths approximately 6" deeper than post bottom. Excavate deeper as required for adequate support in soft and loose soils, and for posts with heavy lateral loads. Set post bottom 42" below surface when in firm, undisturbed soil. Place concrete around posts in a continuous pour. Trowel finish around post and slope to direct water away from posts.

E. Pull Post Spacing: Pull post shall be located not more than 500 feet apart and at each change in direction exceeding 20 degrees. Runs of fence over 500 feet but less than 1000 feet shall have a pull post centered in the run.

F. Gate Post Footing Depth Below Finish Grade: ASTM F567. Drill holes in firm, undisturbed or compacted soil. Holes shall have diameter 8 times greater than outside dimension of post, and depths approximately 6" deeper than post bottom. Excavate deeper as required for adequate support in soft and loose soils, and for posts with heavy lateral loads. Set post bottom 48" below surface when in firm, undisturbed soil. Place concrete around posts in a continuous pour. Trowel finish around post and slope to direct water away from posts.

G. Brace each gate and corner post to adjacent line post with horizontal center brace rail and diagonal truss rods. Maintaining plumb position and alignment of fencing. Install braces at end and gate posts and at both sides of corner and pull posts.
1. Locate horizontal braces at midheight of fabric 6 feet or higher, on fences with top rail and at 2/3 fabric height on fences without top rail. Install so posts are plumb when diagonal rod is under proper tension.

H. Top Rail: Maintaining plumb position and alignment of fencing. Run rail continuously through line post caps, bending to radius for curved runs and terminating into rail end attached to posts or post caps fabricated to receive rail at terminal posts. Provide expansion couplings as recommended in writing by fencing Manufacturer. Install top rail through line post tops and splice with 6 inch long rail sleeves.

I. Install center and bottom brace rail on corner gate leaves.

J. Place fabric on outside of posts and rails.

K. Do not stretch fabric until concrete foundation has cured 28 days.

L. Stretch fabric between terminal posts or at intervals of 100 feet maximum, whichever is less.

M. Position bottom of fabric 1 ½" inches above finished grade.

N. Fasten fabric to top rail, line posts, braces, and bottom tension wire with tie wire at maximum 15 inches on centers.

O. Attach fabric to end, corner, and gate posts with tension bars and tension bar clips.

P. Tension Wire: Maintaining plumb position and alignment of fencing. Pull wire taut, without sags. Fasten fabric to tension wire with 0.120-inch- diameter hog rings of same material and finish as fabric wire, spaced a maximum of 24 inches o.c. Install tension wire in locations indicated before stretching fabric.
1. Bottom Tension Wire: Install tension wire within 6 inches of bottom of fabric and tie to each post with not less than same diameter and type of wire.

Q. Install support arms sloped outward and attach barbed wire; tension and secure.

R. Support gates from gate posts. Do not attach hinged side of gate from building wall.

S. Install gate with fabric and barbed wire overhang to match fence. Install three hinges on each gate leaf, latch, catches, foot bolts and sockets, torsion spring retainer, retainer and locking clamp.

T. Provide concrete center drop to footing depth and drop rod retainers at center of double gate openings.

U. Connect to existing fence at new terminal post.

V. Install posts with 4 inches maximum clear opening from end posts to buildings, fences and other structures.

W. Center and align posts. Place concrete around posts, and vibrate for consolidation. Verify vertical and top alignment of posts and make necessary corrections.

X. Extend concrete footings 1 inches above grade, and trowel, forming crown to shed water.

Y. Allow footings to cure minimum 7 days before installing fabric and other materials attached to posts.

Z. Fasteners: Install nuts for tension bands and carriage bolts on the side of the fence opposite the fabric side. Peen ends of bolts or score threads to prevent removal of nuts.

AA. Barbed Wire: Install barbed wire uniformly spaced, angled toward security side of fence. Pull wire taut and install securely to extension arms and secure to end post or terminal arms.

3.3 GATE INSTALLATION

A. Install gates according to Manufacturer's written instructions, level, plumb, and secure for full opening without interference. Attach fabric as for fencing. Attach hardware using tamper-resistant or concealed means. Install ground-set items in concrete for anchorage. Adjust hardware for smooth operation and lubricate where necessary.

3.4 GROUNDING AND BONDING

A. Fence Grounding: Install at maximum intervals of 1500 feet except as follows:
   1. Fences within 100 Feet of Buildings, Structures, Walkways, and Roadways: Ground at maximum intervals of 750 feet.
      a. Gates and Other Fence Openings: Ground fence on each side of opening.
         1) Bond metal gates to gate posts.
         2) Bond across openings, with and without gates, except openings indicated as intentional fence discontinuities. Use No. 2 AWG wire and bury it at least 18 inches below finished grade.

B. Protection at Crossings of Overhead Electrical Power Lines: Ground fence at location of crossing and at a maximum distance of 150 feet on each side of crossing.

C. Fences Enclosing Electrical Power Distribution Equipment: Ground as required by IEEE C2, unless otherwise indicated.

D. Grounding Method: At each grounding location, drive a grounding rod vertically until the top is 6 inches below finished grade. Connect rod to fence with No. 6 AWG conductor. Connect conductor to each fence component at the grounding location, including the following:
   1. Each Barbed Wire Strand. Make grounding connections to barbed wire with wire-to-wire connectors designed for this purpose.

E. Bonding Method for Gates: Connect bonding jumper between gate post and gate frame.

F. Connections: Make connections so possibility of galvanic action or electrolysis is minimized. Select connectors, connection hardware, conductors, and connection methods so metals in direct contact will be galvanically compatible.
   1. Use electroplated or hot-tin-coated materials to ensure high conductivity and to make contact points closer in order of galvanic series.
   2. Make connections with clean, bare metal at points of contact.
   3. Coat and seal connections having dissimilar metals with inert material to prevent future penetration of moisture to contact surfaces.

G. Bonding to Lightning Protection System: If fence terminates at lightning-protected building or structure, ground the fence and bond the fence grounding conductor to lightning protection down conductor or lightning protection grounding conductor complying with NFPA 780.

3.5 ADJUSTING

A. Gate: Adjust gate to operate smoothly, easily, and quietly, free of binding, warp, excessive deflection, distortion, nonalignment, misplacement, disruption, or malfunction, throughout entire operational range. Confirm that latches and locks engage accurately and securely without forcing or binding.

B. Lubricate hardware and other moving parts.

3.6 ERECTION TOLERANCES

A. Section 01400 - Quality Requirements: Tolerances.

B. Maximum Variation From Plumb: ¼ inch.

C. Maximum Offset From Indicated Position: 1 inch.

D. Minimum distance from property line: 12 inches.

END OF SECTION

SECTION 03100

CONCRETE FORMS AND ACCESSORIES

PART 1 - GENERAL

1.1 SUMMARY

A. Section Includes:
1. Formwork for cast-in place concrete
2. Shoring, bracing, and anchorage
3. Form accessories
4. Form stripping

B. Related Sections:
1. Section 03200 - Concrete Reinforcement
2. Section 03300 - Cast-in-Place Concrete
3. Section 04810 - Unit Masonry Assemblies: Product requirements for masonry accessories for placement by this Section
4. Section 05500 - Metal Fabrications: Product requirements for metal fabrications for placement by this Section

1.2 REFERENCES

A. American Concrete Institute:
1. ACI 117 - Standard Specifications for Tolerances for Concrete Construction and Materials
2. ACI 301 - Specifications for Structural Concrete
3. ACI 318 - Building Code Requirements for Structural Concrete
4. ACI 347 - Guide to Formwork for Concrete

B. ASTM International:
1. ASTM D1751 - Standard Specification for Preformed Expansion Joint Filler for Concrete Paving and Structural Construction (Nonextruding and Resilient Bituminous Types)

1.3 DESIGN REQUIREMENTS

A. Design, engineer and construct formwork, shoring and bracing to conform to design and code requirements to achieve concrete shape, line and dimension.

1.4 SUBMITTALS

A. Section 01330 - Submittal Procedures: Requirements for submittals.

B. Shop Drawings:
1. Submit formwork and shoring shop drawings.
2. Indicate the following:

a. Pertinent dimensions, openings, methods of construction, types of connections, materials, joint arrangement and details, ties and shores, location of framing, studding and bracing, and temporary supports.
b. Means of leakage prevention for concrete exposed to view in finished construction.
c. Sequence and timing of erection and stripping assumed compressive strength at time of stripping, height of lift and height of drop during placement.
d. Vertical, horizontal and special loads in accordance with ACI 347, Section 2.2 and camber diagrams, when applicable.
e. Notes to formwork erector showing size and location of conduits and piping embedded in concrete in accordance with ACI 318, Section 6.3.

C. Product Data: Submit data on void form materials and installation requirements.
1. Submit Manufacturer's product data and installation instruction for proprietary materials used in exposed concrete work including form liners, release agents, form systems, ties and accessories.

D. Design Data: Indicate design data for formwork.

1.5 QUALITY ASSURANCE

A. Perform Work in accordance with ACI 347, ACI 301, ACI 117, and ACI SP-4.

B. For wood products furnished for work of this Section, comply with AF&PA.

C. Maintain one copy of each document on site.

1.6 COORDINATION

A. Section 01300 - Administrative Requirements: Coordination and project conditions.

B. Coordinate this Section with other sections of work, requiring attachment of components to formwork.

PART 2 - PRODUCTS

2.1 WOOD FORM MATERIALS

A. Form Materials: At discretion of Contractor.

B. Forms for Unexposed Concrete:
1. Construct formwork of plywood, lumber, metal, or other acceptable material. Lumber shall be dressed on at least two edges and one side for tight fit.

C. Forms for Exposed Concrete:
1. Construct formwork with plywood, metal, or other panel type materials designed to provide continuous straight and smooth as-cast surfaces with minimum

number of joints. Joints shall be made tight and shall be backed so that edges of adjoining formwork remain flush. Joints shall be vertical or horizontal, unless noted otherwise.

2. Wood forms shall be constructed of 3/4 inch, APA B-B Plyform, Class 1, Exterior conforming to PS-1. Panels shall be mill oiled and all edges shall be sealed.

2.2 FORMWORK ACCESSORIES

A. Form Ties: Removable or Snap-off type, galvanized metal, cone type, with waterproofing washer, 1 inch back break dimension, free of defects capable of leaving holes larger than 1 inch in concrete surface.

B. Spreaders: Standard, non-corrosive metal form clamp assembly, of type acting as spreaders and leaving no metal within 1 inch of concrete face. Wire ties, wood spreaders or through bolts are not permitted.

C. Form Release Agent: Colorless material that will not stain concrete, or absorb moisture, or impair natural bonding or color characteristics of coating intended for use on concrete.

D. Corners: Chamfer, ¾ x ¾ inch size; maximum possible lengths.

E. Vapor Retarder: See Section 07260.

F. Bituminous Joint Filler: ASTM D1751.

G. Nails, Spikes, Lag Bolts, Through Bolts, Anchorages: Size, strength and character to maintain formwork in place while placing concrete.

H. Sleeves and Blockouts: Formed with galvanized metal, galvanized pipe, polyvinyl chloride pipe, or fiber tubes.

PART 3 - EXECUTION

3.1 EXAMINATION

A. Section 01300 - Administrative Requirements: Coordination and project conditions.

B. Verify lines, levels, and centers before proceeding with formwork. Verify dimensions agree with Drawings.

3.2 INSTALLATION

A. The design, construction, and safety of all form work shall be the responsibility of the general Contractor. All forms, shores, back shores, falsework, bracing, and other temporary supports shall be engineered to support all loads imposed including the wet weight of concrete, construction equipment, live loads, lateral loads due to wind and

wet unbalanced concrete. The Contractor shall also be responsible for determining when temporary supports, shores, backshoring, and other bracing shall be safely removed

B. Earth Forms:
1. Earth forms are not acceptable at exposed concrete surfaces.
2. Trench earth forms neatly, accurately, and at least 2 inches wider than footing widths indicated on Drawings.
3. Trim sides and bottom of earth forms.
4. Construct wood edge strips at top of each side of trench to secure reinforcing and prevent trench from sloughing.
5. Form sides of footings where earth sloughs.
6. Tamp earth forms firm and clean forms of debris and loose material before depositing concrete.

C. Formwork - General:
1. Construct forms to correct shape and dimensions, mortar-tight, braced, and of sufficient strength to maintain shape and position under imposed loads from construction operations.
2. Carefully verify horizontal and vertical positions of forms. Correct misaligned or misplaced forms before placing concrete.

D. Erect formwork, shoring, and bracing to achieve design requirements, in accordance with requirements of ACI 301.

E. Arrange and assemble formwork to permit dismantling and stripping. Do not damage concrete during stripping. Permit removal of remaining principal shores.

F. Install chamfer strips on external corners.

G. Install void forms in accordance with Manufacturer's recommendations.

H. Reuse of Forms:
1. Clean and repair surfaces of forms to be reused. Damaged forming material shall not be replaced and shall not be used in construction.
2. Apply form release agent to concrete contact surfaces prior to each reuse of the forms.

3.3 APPLICATION - FORM RELEASE AGENT

A. Apply form release agent on formwork in accordance with Manufacturer's recommendations.

B. Apply prior to placement of reinforcing steel, anchoring devices, and embedded items.

C. Do not apply form release agent where concrete surfaces are indicated to receive special finishes or applied coverings that are affected by agent. Soak inside surfaces of untreated forms with clean water. Keep surfaces coated prior to placement of concrete.

D. Reuse and Coating of Forms: Thoroughly clean forms and reapply form coating before each reuse. For exposed work, do not reuse forms with damaged faces or edges. Apply form coating to forms in accordance with Manufacturer's specifications. Apply form coatings before placing reinforcing steel.

3.4 INSTALLATION - INSERTS, EMBEDDED PARTS, AND OPENINGS

A. Install formed openings for items to be embedded in or passing through concrete work.

B. Locate and set in place items required to be cast directly into concrete.

C. Coordinate with Work of other sections in forming and placing openings, slots, reglets, recesses, sleeves, bolts, anchors, other inserts, and components of other Work.

D. Position recessed reglets for brick veneer masonry anchors in accordance with spacing and intervals.

E. Install accessories straight, level, and plumb. Ensure items are not disturbed during concrete placement.

F. Provide temporary ports or openings in formwork where required to facilitate cleaning and inspection. Locate openings at bottom of forms to allow flushing water to drain.

G. Close temporary openings with tight fitting panels, flush with inside face of forms, and neatly fitted so joints will not be apparent in exposed concrete surfaces.

H. Form Ties:
1. Use sufficient strength and sufficient quantity to prevent spreading of forms.
2. Place ties at least 1 inch away from finished surface of concrete.
3. Leave inner rods in concrete when forms are stripped.
4. Space form ties equidistant, symmetrical and aligned vertically and horizontally unless otherwise shown on Drawings.

I. Arrangement: Arrange formwork to allow proper erection sequence and to permit form removal without damage to concrete.

J. Embedded Items:
1. Make provisions for pipes, sleeves, anchors, inserts, reglets, anchor slots, nailers, water stops, and other features.
2. Do not embed wood or uncoated aluminum in concrete.
3. Obtain installation and setting information for embedded items furnished under other Specification sections.
4. Securely anchor embedded items in correct location and alignment prior to placing concrete.
5. Verify conduits and pipes, including those made of coated aluminum, meet requirements of ACI 318, Section 6.3.

K. Openings for Items Passing Through Concrete:

1. Frame openings in concrete where indicated on Drawings. Establish exact locations, sizes, and other conditions required for openings and attachment of work specified under other sections.
2. Coordinate work to avoid cutting and patching of concrete after placement.
3. Perform cutting and repairing of concrete required as result of failure to provide required openings.

L. Screeds:
1. Set screeds and establish levels for tops of concrete slabs and levels for finish on slabs.
2. Slope slabs to drain where required or as shown on Drawings.
3. Before depositing concrete, remove debris from space to be occupied by concrete and thoroughly wet forms. Remove freestanding water.

3.5 FORM CLEANING

A. Clean forms as erection proceeds, to remove foreign matter within forms.

B. Clean formed cavities of debris prior to placing concrete.

C. Flush with water or use compressed air to remove remaining foreign matter. Ensure that water and debris drain to exterior through clean-out ports.

3.6 FORM REMOVAL

A. Do not remove forms or bracing until concrete has gained sufficient strength to carry its own weight and imposed loads and removal has been approved by Architect/Engineer.

B. Loosen forms carefully. Do not wedge pry bars, hammers, or tools against finish concrete surfaces scheduled for exposure to view.

C. Store removed forms in manner that surfaces to be in contact with fresh concrete will not be damaged. Discard damaged forms.

D. Leave forms in place for minimum number of days as specified in ACI 347.

3.7 ERECTION TOLERANCES

A. Construct formwork to maintain tolerances required by ACI 301.

B. Tolerances: Construct formwork to produce completed concrete surfaces within construction tolerances specified in ACI 117.
1. Level alignment:
   a. Elevation of slabs-on-grade – less than ¾ inch
   b. Elevation of top surfaces of formed slabs before removal of shores – less than ¾ inch
   c. Elevation of formed surfaces before removal of shores – less than ¾ inch

d. Lintels, sills, parapets, horizontal grooves, and other lines exposed to view - 1/2 inch

3.8 FIELD QUALITY CONTROL

A. Section 01400 - Quality Requirements and 01700 - Execution Requirements: Field inspecting, testing, adjusting, and balancing.

B. Inspect erected formwork, shoring, and bracing to ensure that work is in accordance with formwork design, and that supports, fastenings, wedges, ties, and items are secure.

C. Notify Architect/Engineer after placement of reinforcing steel in forms, but prior to placing concrete.

D. Schedule concrete placement to permit formwork inspection before placing concrete.

END OF SECTION

SECTION 03200

CONCRETE REINFORCEMENT

PART 1 - GENERAL

1.1 SUMMARY

A. Section includes:
   1. Reinforcing bars
   2. Welded wire fabric
   3. Reinforcement accessories

B. Related Sections:
   1. Section 03100 - Concrete Forms and Accessories
   2. Section 03300 - Cast-in-Place Concrete

1.2 REFERENCES

A. American Concrete Institute:
   1. ACI 301 - Specifications for Structural Concrete
   2. ACI 318 - Building Code Requirements for Structural Concrete
   3. ACI SP-66 - ACI Detailing Manual

B. ASTM International:
   1. ASTM A184/A184M - Standard Specification for Fabricated Deformed Steel Bar Mats for Concrete Reinforcement
   2. ASTM A497 - Standard Specification for Steel Welded Wire Fabric, Deformed, for Concrete Reinforcement
   3. ASTM A615/A615M - Standard Specification for Deformed and Plain Billet-Steel Bars for Concrete Reinforcement
   4. ASTM A706/A706M - Standard Specification for Low-Alloy Steel Deformed and Plain Bars for Concrete Reinforcement. Reinforcing bars to be welded

C. American Welding Society:
   1. AWS D1.4 - Structural Welding Code - Reinforcing Steel

D. Concrete Reinforcing Steel Institute:
   1. CRSI 63 - Manual of Standard Practice
   2. CRSI 65 - Placing Reinforcing Bars

1.3 SUBMITTALS

A. Section 01330 - Submittal Procedures: Submittal procedures.

B. Shop Drawings: Indicate bar sizes, spacings, locations, and quantities of reinforcing steel and welded wire fabric, bending and cutting schedules, and supporting and spacing devices.

C. Certificates: Submit AWS qualification certificate for welders employed on the Work.

D. Manufacturer's Certificate: Certify Products meet or exceed specified requirements.

E. Submit certified copies of mill test report of reinforcement materials analysis.

1.4 QUALITY ASSURANCE

A. Perform Work in accordance with CRSI - Manual of Standard Practice.

B. Maintain one copy of each document on site.

1.5 QUALIFICATIONS

A. Welders: AWS qualified within previous 12 months.

1.6 DELIVERY, STORAGE, AND HANDLING

A. Section 01600 - Product Requirements: Product storage and handling requirements.

B. Accept metal fabrications on site in labeled shipments. Inspect for damage.

C. Protect metal fabrications from damage by exposure to weather.

1.7 COORDINATION

A. Section 01300 - Administrative Requirements: Coordination and project conditions.

B. Coordinate with placement of formwork, formed openings and other Work.

PART 2 - PRODUCTS

2.1 REINFORCEMENT

A. Reinforcing Steel: ASTM A615, 60 ksi yield grade; deformed billet steel bars, galvanized in accordance with ASTM A767/A767M, Class II epoxy coated in accordance with ASTM A775/A775M finish.

B. Reinforcing Steel Plain Bar and Rod Mats: ASTM A704/A704M, ASTM A615/A615M, Grade 60; steel bars or rods, unfinished.

C. Stirrups Steel: ASTM A82, galvanized in accordance with ASTM A641/A641M finish.

D. Welded Steel Wire Fabric: ASTM A497 Deformed Type; in flat sheets; plain finish.

2.2 ACCESSORY MATERIALS

A. Tie Wire: Minimum 16 gage annealed type.

B. Chairs, Bolsters, Bar Supports, and Spacers: Sized and shaped for strength and support of reinforcement during concrete placement conditions including load bearing pad on bottom to prevent vapor retarder puncture.

C. Special Chairs, Bolsters, Bar Supports, Spacers Adjacent to Weather Exposed Concrete Surfaces: Plastic-coated steel or Stainless steel type; size and shape to meet Project conditions.

2.3 FABRICATION

A. Fabricate concrete reinforcement in accordance with CRSI Manual of Practice.

B. Weld reinforcement in accordance with AWS D1.4

C. Reinforcement: Clean surfaces, weld and re-protect welded joint in accordance with CRSI.

D. Locate reinforcement splices, at point of minimum stress.

2.4 FABRICATION OF EMBEDDED METAL ASSEMBLIES

A. Fabricate metal assemblies in the shop. Holes shall be made by drilling or punching. Holes shall not be made by or enlarged by burning. Welding shall be in accordance with AWS D1.1.

B. Welding of deformed bar anchors and headed stud anchors shall be done by full fusion process equal to that of TRW Nelson Stud Welding Division. A minimum of two headed studs shall be tested at the start of each production period for proper quality control. The studs shall be capable of being bent 45 degrees without failure.

C. Welding of reinforcement shall be done in accordance with AWS D1.4, using the recommended preheat temperature and electrode for the type of reinforcement being welded. Bars larger than no. 9 shall not be welded. Welding shall be subject to the observance and testing of the Testing Laboratory.

D. Metal assemblies shall be hot dip galvanized. Repair galvanizing after welding with a Cold Galvanizing compound installed in accordance with the Manufacturer's instructions.

PART 3 - EXECUTION

3.1 PLACEMENT

A. Place, support and secure reinforcement against displacement. Do not deviate from required position.

B. Do not displace or damage vapor retarder.

C. Accommodate placement of formed openings.

D. Maintain concrete cover around reinforcement as follows: as noted on Structural Drawings.

E. Conform to applicable code for concrete cover over reinforcement.

F. Before placing concrete, clean reinforcement to remove soil, loose rust, mill scale, ice, or other materials which reduce bond with concrete.

G. Accurately position reinforcement and secure reinforcement against displacement by construction or concrete placement operations.

H. Place reinforcement to obtain minimum concrete cover specified. Tie bars and bar supports together with tie wire to hold reinforcement in position. Set tie wires so that the twisted ends are directed away from exposed concrete surfaces.

I. Installation tolerances:
   1. Top and Bottom bars in slabs, girders, beams and joists
      a. Members 8” deep or less +/-3/8”
      b. Members more than 8" deep: "1/2"
   2. Concrete Cover to Formed or Finished Surfaces: "3/8" for members 8" deep or less; 1/2" for members over 8" deep, except that tolerance for cover shall not exceed 1/3 of the specified cover.

J. Concrete Cover: Refer to the Structural Notes on Drawings.

K. Welded Wire Fabric: Lap adjoining pieces at least one full mesh and lace splices with tie wire.

L. Splices: Refer to the Structural Notes on Drawings. Provide standard reinforcement splices by lapping and tying ends. Comply with ACI 318 for minimum lap of spliced bars where not specified on the documents.

M. Welding of Reinforcing Steel: Comply with the requirements of AWS D1.4 for field welding. Only steel conforming to ASTM A706 may be welded.

N. Field Welding of Embedded Metal Assemblies: All paint and galvanizing shall be removed in areas to receive field welds. All areas where paint or galvanizing has been removed shall be field repaired with the specified paint or cold galvanizing compound, respectively.

O. Bond and ground reinforcement in accordance with requirements of Section 16060.

3.2 FIELD QUALITY CONTROL

A. Section 01400 - Quality Requirements: Testing and Inspection Services and 01700 - Execution Requirements: Testing and adjusting etc.

END OF SECTION

SECTION 03300

CAST-IN-PLACE CONCRETE

PART 1 - GENERAL

1.1 SUMMARY

A. Section includes cast-in-place concrete for the following:
1. Foundation walls
2. Slabs on grade
3. Control, expansion and contraction joint devices
4. Equipment pads
5. Light pole base
6. Flagpole base
7. Manholes

B. Related Sections:
1. Section 03100 - Concrete Forms and Accessories: Formwork and accessories
2. Section 03200 - Concrete Reinforcement
3. Section 07900 - Joint Sealers

1.2 REFERENCES

A. American Concrete Institute:
1. ACI 301 - Specifications for Structural Concrete
2. ACI 304 – Guide for Measuring, Mixing, Transporting and Placing Concrete
3. ACI 305 - Hot Weather Concreting
4. ACI 305 - Hot Weather Concreting
5. ACI 306 - Cold Weather Concreting
6. ACI 308 - Standard Practice for Curing Concrete
7. ACI 309 - Recommended Practice for Consolidation of Concrete
8. ACI 306.1 - Standard Specification for Cold Weather Concreting
9. ACI 318 - Building Code Requirements for Structural Concrete

B. ASTM International:
1. ASTM C33 - Standard Specification for Concrete Aggregates
2. ASTM C94 - Standard Specification for Ready-Mixed Concrete
3. ASTM C150 - Standard Specification for Portland Cement
4. ASTM C260 - Standard Specification for Air-Entraining Admixtures for Concrete
5. ASTM C330 - Standard Specification for Lightweight Aggregates for Structural Concrete
6. ASTM C494 - Standard Specification for Chemical Admixtures for Concrete
7. ASTM C595 - Standard Specification for Blended Hydraulic Cements
8. ASTM C618 - Standard Specification for Coal Fly Ash and Raw or Calcined Natural Pozzolan for Use as a Mineral Admixture in Portland Cement Concrete

9. ASTM C1017 - Standard Specification for Chemical Admixtures for Use in Producing Flowing Concrete
10. ASTM D1752 - Standard Specification for Preformed Sponge Rubber and Cork Expansion Joint Fillers for Concrete Paving and Structural Construction
11. ASTM E1643 - Standard Practice for Installation of Water Vapor Retarders Used in Contact with Earth or Granular Fill under Concrete Slabs
12. ASTM E1745 - Standard Specification for Plastic Water Vapor Retarders Used in Contact with Soil or Granular Fill under Concrete Slabs

1.3 SUBMITTALS

A. Section 01330 - Submittal Procedures: Submittal procedures.

B. Product Data: Submit data on joint devices, attachment accessories, and admixtures.

C. Design Data:
1. Submit concrete mix design for each concrete strength. Submit separate mix designs when admixtures are required for the following:
   a. Hot and cold weather concrete work
   b. Air entrained concrete work
2. Identify mix ingredients and proportions, including admixtures.
3. Submit proposed mix designs prepared in accordance with ACI 301, Chapter 3.9. Each proposed mix design shall be accompanied by a complete standard deviation analysis based on at least 30 consecutive strength tests, or by three laboratory trial mixtures with confirmation tests.

D. Construction Joints: Submit a diagram of proposed construction joints other than those indicated on the Drawings.

E. Fly ash: Submit certification attesting to carbon content and compliance with ASTM C618.

F. Manufacturer's Installation Instructions: Submit installation procedures and interface required with adjacent Work.

1.4 CLOSEOUT SUBMITTALS

A. Section 01700 - Execution Requirements: Closeout procedures.

B. Project Record Documents: Accurately record actual locations of embedded utilities and components concealed from view in finished construction.

1.5 QUALITY ASSURANCE

A. Perform Work in accordance with ACI 301.

B. Comply with governing codes and regulations. Provide products of acceptable Manufacturers that have been in satisfactory use in similar service for three years. Use

experienced Installers. Deliver, handle, and store materials in accordance with Manufacturer's instructions.

C. Testing: Employ an independent testing agency acceptable to Owner to design concrete mixes and to perform material evaluation tests. Provide 7 and 28 day cylinder tests. Comply with ASTM C 143, C 173, C 31 and C 39.

D. Maintain one copy of each document on site.

E. Acquire cement and aggregate from one source for Work.

F. Conform to ACI 305 when concreting during hot weather.

G. Conform to ACI 306.1 when concreting during cold weather.

H. Testing: Independent Testing Laboratory
   1. Contractors responsibilities to testing laboratory:
      a. Furnish labor and materials as required to assist testing agency in obtaining, making and handling samples at the jobsite.
      b. Advise the testing agency sufficiently in advance of operations to allow testing agency adequate time for the assignment of testing personnel.
      c. Furnish and maintain adequate facilities for the proper curing of concrete test specimens on the project site in accordance with ASTM C31.

I. Evaluation and Acceptance:
   1. The strength level of the concrete will be considered satisfactory if the averages of all sets of three consecutive strength test results equal or exceed the specified strength and no individual test result (average of two cylinders) is below the specified strength by more than 500 psi.
   2. When the strength level of the concrete for any portion of the structure, as indicated by cylinder tests, falls below the specified requirements, the Contractor shall provide improved curing conditions and/or adjustments to the mix design as required to obtain the required strength. If the average strength of the laboratory control cylinders falls so low as to be deemed unacceptable, the Contractor shall follow the core test procedure set forth in ACI 301, Chapter 17. Locations of core tests shall be approved by the Architect. Core sampling and testing shall be at Contractors expense.
      a. If the results of the core tests indicate that the strength of the structure is inadequate, any replacement, load testing, or strengthening as may be ordered by the Architect / Engineer shall be provided by the Contractor without cost to the Owner.

1.6 CONCRETE MIX DESIGNS

A. Selection of Proportions: Proportions of ingredients for concrete mixes shall be determined by an Independent testing laboratory or qualified concrete supplier in accordance with the requirements of ACI 301, chapter 3. If testing laboratory provides concrete mix designs, it shall be selected by the Contractor, approved by the Architect, and paid by the Contractor.

B. Required average strength above specified strength: Determination of required average strength above specified strength shall be based on the standard deviation record of the production facility in accordance with ACI 301. Calculation of standard deviation of compressive strength results shall be made in accordance with ACI 214. If a suitable record of strength tests is not available, proportions shall be selected on the basis of laboratory trial batches to produce an average strength greater than the specified strength f'c by the amount defined in ACI 301, Table 3.9.2.2.

C. All concrete mix designs shall include the following information:
1. Proportions of cement, fine and coarse aggregates, and water
2. Maximum water/cement ratio, design strength, maximum slump, and air content
3. Type cement and aggregates
4. Type and quantities of all admixtures
5. Any special requirements for pumping
6. Any special characteristics of the mix which require precautions in the mixing, placing, or finishing techniques to achieve the finished product specified

1.7 COORDINATION

A. Section 01300 - Administrative Requirements: Coordination and project conditions.

B. Coordinate placement of joint devices with erection of concrete formwork and placement of form accessories.

PART 2 - PRODUCTS

2.1 CONCRETE MATERIALS

A. Cement: ASTM C150, Type I - Normal Portland type; ASTM C595.

B. Fine and Coarse Aggregates: ASTM C33.

C. Lightweight Aggregate: ASTM C330.

D. Fly ash conforming to ASTM C618 may be used in non-architecturally exposed concrete. Carbon content shall not exceed (3) three percent by volume.

E. Water: Clean and not detrimental to concrete.

2.2 ADMIXTURES

A. Do not use admixtures which have not been incorporated and tested in accepted mixes.
a. Calcium chloride admixtures are not permitted.
b. Thiocyanates and admixtures containing more than 0.05 percent chloride ions shall not be used in the concrete mix.

B. Air Entrainment: ASTM C260.

C. Set Controlling Admixtures: ASTM C494
   1. Type A - Water Reducing
   2. Type D - Water Reducing and Retarding
   3. Type E - Water Reducing and Accelerating
   4. Type F - Water Reducing, High Range Admixtures
   5. Type G - Water Reducing, High Range and Retarding Admixtures

D. Fly Ash: ASTM C618 Class F.

2.3 ACCESSORIES

A. Bonding Agent: Polyvinyl Acetate or Two component modified epoxy resin.

B. Vapor Retarder: See Section 07260 Vapor Retarders.

C. Curing Materials: Liquid Membrane-Forming Curing Compound: ASTM C 309, Type 1, Class A. or Water-Based Acrylic Membrane Curing Compound: ASTM C 309, Type 1, Class B. Material providing water retention not exceeding loss of 0.055 gm/cm2 in 72 hours when used at a coverage of 200 square feet per gallon and tested in accordance with ASTM C156.
   1. Curing compound shall conform to the requirements of ASTM C309. Curing compound used on exposed concrete shall be non-discoloring and shall not darken or yellow with age.
   2. Dissipating curing compound shall be liquid membrane forming compound complying with ASTM C309, which provides an initial cure for concrete, then begins to chemically break down and wear off the surface within 6 to 8 weeks. Acceptable products are: AKurez DR@ by the Euclid Chemical Company or approved equal.

D. Non-Shrink Grout: ASTM C1107, Grade B; premixed compound consisting of non-metallic aggregate, cement, water reducing and plasticizing agents; capable of developing minimum compressive strength of 2,400 psi in 48 hours and 7,000 psi in 28 days.

E. Epoxy Adhesive: Conforming to ASTM C881. "Euco Epoxy 452 or 620," by the Euclid Chemical Company, "Sikadur 32, Hi-Mod," by the Sika Corporation, or approved equal. The compound shall be a two component, 100 percent solids compound suitable for use on dry or damp surfaces.

F. Waterstops: Rubber or PVC water stops. At all construction joints below grade. "Synko-Flex" Preformed Plastic Waterstop by Synko-Flex Products, Inc., meeting the requirements of FS-SS-S-210A.

G. Evaporation retarder for hot weather curing Monomolecular film-forming compound shall be a spray applied liquid film "Confilm" by Master Builders, or approved equal.

H. Reglets: Galvanized sheet steel reglets, minimum 26 gage (.018 inch).

I. Vapor Barrier: Pre-molded membrane, ASTM E 96, Method B, 0-vapor transmission rate.

J. Non-slip Aggregate Finish: Fused aluminum oxide granules or crushed emery.

K. Underlayment Compound: Free-flowing, self-leveling cement-based compound.

2.4 CONCRETE MIX

A. Mix and deliver concrete in accordance with ASTM C94, Option C.

B. Provide concrete to the following criteria:

Unit	Measurement
Compressive Strength (28 day)	3,000 psi

1. Beams, Walls, Foundations, and Footings: 3000 psi
2. Slabs on Grade: 3000 psi
3. Paving Base: 3500 psi
4. Exterior Site Concrete and Pads Exposed to Weather: 3500 psi

C. Admixtures: Include admixture types and quantities indicated in concrete mix designs approved through submittal process.
1. Use accelerating admixtures in cold weather only when approved by Engineer / Architect. Use of admixtures will not relax cold weather placement requirements.
2. Calcium chloride is not permitted.
3. Use set retarding admixtures during hot weather only when approved by Engineer / Architect.
4. Add air entraining agent to normal weight concrete mix for work exposed to exterior.

PART 3 - EXECUTION

3.1 EXAMINATION

A. Section 01300 - Administrative Requirements: Coordination and project conditions.

B. Verify requirements for concrete cover over reinforcement.

C. Verify anchors, seats, plates, reinforcement and other items to be cast into concrete are accurately placed, positioned securely, and will not interfere with placing concrete.

3.2 PLACING CONCRETE

A. Concrete shall not be mixed for placing until the mix designs and corresponding strength tests for each class of concrete have been accepted by the Architect for use on the project.

B. Mix concrete in accordance with ASTM C94.

C. Place concrete in accordance with ACI 301 and ACI 304.

D. Notify Architect/Engineer minimum 48 hours prior to commencement of operations.

E. Ensure reinforcement, inserts, embedded parts, formed expansion and contraction joints, are not disturbed during concrete placement.

F. Install vapor retarder under interior slabs on grade in accordance with ASTM E1643. Lap joints minimum 6 inches and seal watertight by taping edges and ends.

G. Repair vapor barrier damaged during placement of concrete reinforcing. Repair with vapor barrier material; lap over damaged areas minimum 6 inches and seal watertight.

H. Anchor bolts: Install anchor bolts as shown on the approved shop drawings. Use templates to set anchor bolts and secure into position before placing concrete. Do not stab anchor bolts into concrete. Anchor bolts shall be placed within the following tolerances measured after concrete placement:

1. Spacing within a bolt group: 1/8"
2. Location of bolt group (center): 1/2"
3. Rotation of bolt group: 5 degrees
4. Angle off vertical: 5 degrees
5. Bolt projection: 3/8"

I. Pump priming grout shall be discarded and not used in the structure.

J. Do not permit concrete to drop freely any distance greater than 10'-0" for concrete containing a high range water reducing admixture (superplasticizer) or 5'-0" for other concrete. Provide chute or tremie to place concrete where longer drops are necessary. Do not place concrete into excavations with standing water. If place of deposit cannot be pumped dry, pour concrete through a tremie with its outlet near the bottom of the place of deposit.

K. Vibration: As soon as concrete is deposited vibrate concrete with mechanical vibrators. Do not over vibrate or use vibrators to transport concrete within forms. Insert and withdraw vibrators at regular intervals from 18" to 30" apart. At each insertion the duration shall not be sufficient to cause segregation, generally from 5 to 15 seconds duration. A spare vibrator shall be kept on the jobsite during all concrete placing operations.

L. Prepare previously placed concrete by cleaning with steel brush and applying water or bonding agent. Apply bonding agent in accordance with Manufacturer's instructions.

M. Construction Joints: Except as otherwise specifically indicated on the drawings, each concrete member shall be considered as a single unit, and all concrete for the same shall be placed continuously in order that such unit will be monolithic in construction. Should construction joints prove to be absolutely unavoidable, the joints shall be located at or near midspan of the beams, joists, or slabs. Additional construction joints must be submitted for review by the Architect.

N. Separate slabs on grade from vertical surfaces with joint filler.

O. Place joint filler in floor slab. Set top to required elevations. Secure to resist movement by wet concrete.

P. Apply sealants in joint devices in accordance with Section 07900.

Q. Maintain records of concrete placement. Record date, location, quantity, air temperature, and test samples taken.

R. Place concrete continuously between predetermined expansion, control, and construction joints.

S. Do not interrupt successive placement; do not permit cold joints to occur.

T. Control Joints: Provide sawn or tooled joints or removable insert strips; depth equal to 1/4 slab thickness. Spacing as required and approved.

U. Saw cut joints within 12 hours after placing. Use 3/16 inch thick blade, cut into 1/4 depth of slab thickness.

V. Screed slabs on grade level, maintaining surface flatness of maximum 1/8 inch in 10 ft.

W. Chamfer exposed edges/corners to provide straight lines.

X. Construction Joints: Use keyways, continue reinforcement through joint.

Y. Expansion Joints: For exterior works locate 30' o.c. at approved locations. Provide smooth dowels across joint which permit 1" horizontal movement and no vertical shear movement.

Z. Isolation Joints: Provide between slabs and vertical elements such as columns and structural walls.

AA. Mixing time: Unless otherwise approved by the laboratory inspector, discharge shall be completed within 90 minutes after the introduction of water to the cement.

3.3 CONCRETE FINISHING

A. Finish concrete floor surfaces to requirements of Section 03350.

B. Provide formed concrete surfaces to be left exposed with smooth rubbed finish as Scheduled in this section.
   1. Wall Finishes: As cast and patched for concealed work; rubbed smooth, filled and cement paste coated for exposed work.

C. Wood float surfaces receiving ceramic tile with full bed setting system.

D. Steel trowel surfaces receiving carpeting, resilient flooring, seamless flooring, thin set quarry tile, or thin set ceramic tile.

E. Steel trowel surfaces which are indicated to be exposed.

F. In areas with floor drains, maintain floor elevation at walls; pitch surfaces uniformly to drains at 1/8 inch per foot nominal and as indicated on drawings.

3.4 CURING AND PROTECTION

A. Immediately after placement, protect concrete from premature drying, excessively hot or cold temperatures, and mechanical injury.

B. Maintain concrete with minimal moisture loss at relatively constant temperature for period necessary for hydration of cement and hardening of concrete.

C. Cure floor surfaces in accordance with ACI 301.

D. Spraying: Spray water over floor slab areas and maintain wet for 7 days.

E. Cure and protect work. Report defective work in writing.

3.5 FIELD QUALITY CONTROL

A. Section 01400 - Quality Requirements: Testing and Inspection Services and 01700 - Execution Requirements: Testing, adjusting, and balancing.

B. Field inspection and testing will be performed in accordance with ACI 301 and under provisions of Section 01400.

C. Provide free access to Work and cooperate with appointed firm.

D. Submit proposed mix design of each class of concrete to Architect / Engineer and inspection and testing firm for review prior to commencement of Work. Do not change mix design with review and approval by Architect / Engineer.

E. Tests of cement and aggregates may be performed to ensure conformance with specified requirements.

F. Three concrete test cylinders will be taken for every 75 or less cu yds of each class of concrete placed.

G. One additional test cylinder will be taken during cold weather concreting, cured on job site under same conditions as concrete it represents.

H. One slump test will be taken for each set of test cylinders taken.

I. One air content test will be made for each set of test cylinders taken.

J. Maintain records of concrete placement. Record date, location, quantity, air temperature and test samples taken.

3.6 QUALITY CONTROL TESTING DURING CONSTRUCTION

A. General: The Contractor will employ a testing agency to perform tests and to submit test reports. Reference Section 01410 Testing Laboratory Services.

B. Sampling and testing for quality control during concrete placement may include the following, as directed by Architect.
   1. Sampling Fresh Concrete: ASTM C 172, except modified for slump to comply with ASTM C94.
   2. Slump: ASTM C 143: one test at point of discharge for each day's pour of each type of concrete; additional tests when concrete consistency seems to have changed.
   3. Air Content: ASTM C 173, volumetric method for lightweight or normal weight concrete; ASTM C 231, pressure method for normal weight concrete, one for each day's pour of each type of air-entrained concrete.
   4. Concrete Temperature: ASTM C 1064; one test hourly when air temperature is 40 deg. F (4 deg. C) and below, when 80 deg. F (27 deg. C) and above, and one test for each set of compressive-strength specimens.
   5. Compression Test Specimen: ASTM C 31; one set of four standard cylinders for each compressive-strength test, unless otherwise directed. Mold and store cylinders for laboratory0cured test specimens except when field-cured test specimens are required.
   6. Compressive-Strength Tests: ASTM C 39; one set for each day's pour exceeding 5 cubic yard plus additional sets for each 50 cubic yard more than the first 25 cubic yard of each concrete class placed in any one day; one specimen tested at 7 days, two specimens tested at 28 days, and one specimen retained in reserve for later testing if required.
      a. When frequency of testing will provide fewer than five strength tests for a given class of concrete, conduct testing from at least five randomly selected batches or from each batch if fewer than five are used.
      b. When total quantity of a given class of concrete is less than 50 cubic yards, Architect may waive strength testing if adequate evidence of satisfactory strength is provided.
      c. When strength of field-cured cylinders is less than 85% of companion laboratory-cured cylinders, evaluate current operations and provide corrective procedures for protecting and curing the in-place concrete.
      d. Strength level of concrete will be considered satisfactory if averages of sets of three consecutive strength test results equal or exceed specified compressive strength and no individual strength test result falls below specified compressive strength by more than 500 psi.

C. Test results will be reported in writing to Architect, Structural Engineer, ready-mix producer, and Contractor within 24 hours after tests. Reports of compressive strength tests shall contain the Project identification name and number, date of concrete placement, name of concrete testing service, concrete type and class, location of concrete batch in structure, design compressive strength at 28 days, concrete mix

proportions and materials, compressive breaking strength, and type for break for both 7-day tests and 28-day tests.

D. Non-destructive Testing: Impact hammer, sonoscope, or other non-destructive device may be permitted but shall not be used as the sole basis for acceptance or rejection.

E. Additional Tests: The testing agency will make additional tests of in-place concrete when test results indicate specified concrete strengths and other characteristics have not been attained in the structure, as directed by Architect. Testing agency may conduct tests to determine adequacy of concrete by cored cylinders complying with ASTM C 42, or by other method as directed.

3.7 PATCHING

A. Allow Architect/Engineer to inspect concrete surfaces immediately upon removal of forms.

B. Excessive honeycomb or embedded debris in concrete is not acceptable. Notify Architect/Engineer upon discovery.

C. Patch imperfections as directed by Architect / Engineer in accordance with ACI 301.

3.8 DEFECTIVE CONCRETE

A. Defective Concrete: Concrete not conforming to required lines, details, dimensions, tolerances or specified requirements.

B. Repair or replacement of defective concrete will be determined by Architect/Engineer.

C. Do not patch, fill, touch-up, repair, or replace exposed concrete except upon express direction of Architect / Engineer for each individual area.

3.9 CONCRETE SURFACE REPAIRS

A. General: Provide exposed-to-view concrete formed surfaces of such quality as to require a minimum of pointing. Exercise care in the forming, mixing and placing of concrete to assure reasonably uniform surfaces free of blemishes and defects. Repair unsightly voids or honeycombing using approved methods. Fins and other projections shall be neatly dressed off. Form offsets greater than the specified tolerances shall be ground down.

B. Patching Defective Areas: Repair and patch defective areas with cement mortar immediately after removing forms, when acceptable to Architect / Engineer.

C. Mix dry-pack mortar, consisting of one part Portland cement to 2-1/2 parts fine aggregate passing a No. 16 mesh sieve, using only enough water as required for handling and placing.

D. Cut out honeycombs, rock pockets, voids over 1/4 inch in any dimension, and holes left by tie rods and bolts down to solid concrete but in no case to a depth less than 1 inch.

Make edges of cuts perpendicular to the concrete surface. Thoroughly clean, dampen with water, and brush-coat the area to be patched with bonding agent. Place patching mortar before bonding agent has dried.

E. For surfaces exposed to view, blend white Portland cement and standard Portland cement so that, when dry, patching mortar will match surrounding color. Provide test areas at inconspicuous locations to verify mixture and color match before proceeding with patching. Compact mortar in place and strike-off slightly higher than surrounding surface.

F. Repairing Formed Surfaces: Remove and replace concrete having defective surfaces if defects cannot be repaired to satisfaction of Architect / Engineer. Surface defects include color and texture irregularities, cracks, spalls, air bubbles, honeycomb, rock pockets, fins and other projections on the surface, and stains and other discolorations that cannot be removed by cleaning. Flush out form tie holes and fill with dry-pack mortar or pre-cast cement cone plugs secured in place with bonding agent.

G. Repair concealed formed surfaces, where possible, containing defects that affect the concrete's durability. If defects cannot be repaired, remove and replace the concrete.

H. Repairing Unformed Surfaces: Test unformed surfaces, such as monolithic slabs, for smoothness and verify surface tolerances specified for each surface and finish. Correct low and high areas as specified. Test unformed surfaces sloped to drain for trueness of slope and smoothness by using a template having the required slope.

I. Repair finished unformed surfaces containing defects that affect the concrete's durability. Surface defects include crazing and cracks in excess of 0.01 inch wide or that penetrate to the reinforcement or completely through non-reinforced sections regardless of width, spalling, popouts, honeycombs, rock pockets, and other objectionable conditions.

J. Correct high areas in unformed surfaces by grinding after concrete has cured at least 14 days.

K. Correct low areas in unformed surfaces during or immediately after completing surface finishing operations by cutting out low areas and replacing with patching mortar. Finish repaired areas to blend into adjacent concrete. Proprietary underlayment compounds may be used when acceptable to Architect.

L. Repair defective areas, except random cracks and single holes not exceeding 1 inch in diameter, by cutting out and replacing with fresh concrete. Remove defective areas with clean, square cuts and expose reinforcing steel with at least 3/4-inch clearance all around. Dampen concrete surfaces in contact with patching concrete and apply bonding agent. Mix patching concrete of same materials to provide concrete of same type or class as original concrete. Place, compact, and finish to blend with adjacent finished concrete. Cure in same manner as adjacent concrete.

M. Repair isolated random cracks and single holes 1 inch or less in diameter by dry-pack method. Groove top of cracks and cut out holes to sound concrete and clean of dust,

dirt, and loose particles. Dampen cleaned concrete surfaces and apply bonding compound. Place dry-pack before bonding agent has dried. Compact dry-pack mixture in place and finish to match adjacent concrete. Keep patched area continuously moist for at least 72 hours.

N. Perform structural repairs with prior approval of Architect / Engineer for method and procedure, using specified epoxy adhesive and mortar.

O. Repair methods not specified above may be used, subject to acceptance of Architect / Engineer.

3.10 CLEANUP

A. Imperfect or damaged work or any material damaged or determined to be defective before final completion and acceptance of the entire job, shall be satisfactorily replaced at the Contractor's expense, and in conformity with all of the requirements of the Drawings and Specifications. Removal and replacement of concrete work shall be done in such manner as not to impair the appearance or strength of the structure in any way.

B. Cleaning: Upon completion of the work all forms, equipment, protective coverings and any rubbish resulting there from shall be removed from the site. After sweeping floors, wash floors with clean water. Finished concrete surfaces shall be left in a clean condition, satisfactory to the Owner.

END OF SECTION

SECTION 03350

CONCRETE FINISHING

PART 1 - GENERAL

1.1 SUMMARY

A. Section Includes:
1. Finishing concrete floors
2. Floor surface treatment

B. Related Sections:
1. Section 03300 - Cast-in-Place Concrete
2. Section 07900 - Joint Sealers

1.2 REFERENCES

A. American Concrete Institute:
1. ACI 301 - Specifications for Structural Concrete
2. ACI 302.1 - Guide for Concrete Floor and Slab Construction

B. ASTM International:
1. ASTM E1155 - Standard Test Method for Determining Floor Flatness and of Levelness Using the F-number System

1.3 SUBMITTALS

A. Section 01330 - Submittal Procedures: Submittal procedures.

B. Product Data: Submit data on sealer, curing compounds, compatibilities, and limitations.

C. Installer qualifications.

1.4 CLOSEOUT SUBMITTALS

A. Section 01700 - Execution Requirements: Closeout procedures.

B. Operation and Maintenance Data: Submit data on maintenance renewal of applied coatings.

1.5 QUALITY ASSURANCE

A. Perform Work in accordance with ACI 301 and ACI 302.1.

B. Maintain one copy of each document on site.

1.6 QUALIFICATIONS

A. Manufacturer: Company specializing in manufacturing Products specified in this section with minimum three years documented experience.

B. Installer: Company specializing in performing work of this section with minimum three years documented experience.

1.7 DELIVERY, STORAGE, AND HANDLING

A. Section 01600 - Product Requirements: Product storage and handling requirements.

B. Deliver materials in Manufacturer's packaging including application instructions.

1.8 ENVIRONMENTAL REQUIREMENTS

A. Section 01600 - Product Requirements: Environmental conditions affecting products on site.

B. Temporary Lighting: Minimum 200 W light source, placed 8 feet above floor surface, for each 425 sq ft of floor being finished, as needed for finishing.

1.9 COORDINATION

A. Section 01300 - Administrative Requirements: Coordination and project conditions.

B. Coordinate the Work with concrete floor placement and concrete floor curing.

PART 2 - PRODUCTS

2.1 MANUFACTURERS

A. Manufacturers:
1. Euclid Chemical Co.
2. Master Builders Inc.
3. Sika Corp.
4. Substitutions: Section 01600 - Product Requirements.

PART 3 - EXECUTION

3.1 EXAMINATION

A. Section 01300 - Administrative Requirements: Coordination and project conditions.

B. Verify floor surfaces are acceptable to receive the Work of this section.

3.2 FLOOR FINISHING

A. Finish concrete floor surfaces in accordance with ACI 301 and ACI 302.1.

B. Wood float surfaces receiving tile with full bed setting system.

C. Steel trowel surfaces receiving carpeting, resilient flooring, seamless flooring, and thin set ceramic tile.

D. Steel trowel surfaces which are indicated to be exposed.

E. In areas with floor drains, maintain design floor elevation at walls; slope surfaces uniformly to drains at 1/8 inch per foot and as indicated on Drawings.

F. Highway straightedges are recommended for use in lieu of bullfloats for all slab placement and finishing operations.

G. Screeding: Immediately after placing, slab shall be vibrated and struck off true by double screeding to the required level, at or below the elevation or grade of the finished slabs as indicated on the Drawings. Vibrators shall not be used to spread the concrete.

H. Straightedging: Immediately after screeding and before excess bleed water is present on the surface, straighten the surface using a highway straightedge.

I. Edging and jointing, where required, shall be done after bleed water has evaporated and before further finishing.

J. Float Finish
   1. Locations: All concrete surfaces under waterproofing membrane, setting beds for brick, mud- set tile, pavers, or terrazzo, and noncomposite topping slabs.
   2. Finishing: After concrete has stiffened sufficiently, and after bleed water has disappeared, the surface shall be wood floated at least twice to produce a uniform texture with no coarse aggregate visible. Use hand floats or power machine floats, applying sufficient pressure to bring the moisture to the surface.

K. Trowel Finish
   1. Locations: Exposed concrete floors not otherwise specified, concrete surfaces under carpets, vinyl tile, thin set tile, wood flooring, elastomeric coatings, and painted concrete floors, and roof slabs that are future floors.
   2. Finishing: After concrete has stiffened sufficiently to permit operation and after bleed water has disappeared, hand or machine float the surface. Follow immediately by steel troweling at least twice with hand or machine trowels.

L. Broom Finish
   1. Locations: Exterior stairs, ramps, walks, curbs, islands, parking and drive areas, and other locations noted on the Drawings.
   2. Finishing: Same method as specified for trowel finish, except after initial troweling brush concrete surfaces with soft brush or broom to texture specified

by the Architect. Striations shall run in the direction of the drainage slope, if any, unless otherwise specified.

M. Saw-cut Control Joints: After completion of finishing operations, cut control joints along straight lines where called for on the Drawings. Saw cutting shall be done within 12 hours after the completion of finishing, but not so soon to cause raveling of the joint. Cut to the depth indicated on the Drawings.

3.3 TOLERANCES

A. Section 01400 - Quality Requirements: Tolerances.

B. Maximum Variation of Surface Flatness For Exposed Concrete Floors: 1/8 inch in 10 ft .

C. Maximum Variation of Surface Flatness Under Seamless Resilient Flooring: 1/8 inch in 10 ft.

D. Maximum Variation of Surface Flatness Under Carpeting: 1/8 inch in 10 ft.

E. Correct defects in defined traffic floor by grinding or removal and replacement of defective Work. Areas requiring corrective Work will be identified. Re-measure corrected areas by same process.

F. All floors are subject to measurement for flatness and levelness and shall comply with the following:
1. Slabs shall be flat within a tolerance of 1/8” in 10’-0” when tested with a ten foot long straightedge. Apply straightedge to the slab at 3’-0” intervals in both directions, lapping straightedge 3’-0” on areas previously checked. Low spots shall not exceed the above dimension anywhere along the straightedge. Flatness shall be checked the next work day after finishing.
2. Slabs shall be level within a tolerance of plus or minus 1/8” in 10’- 0”, not to exceed ¾” total variation, anywhere on the floor, from elevations indicated on the Drawings. Levelness shall be checked on a 10’-0” grid using a level after removal of forms.

G. Floor Elevation Tolerance Envelope:
1. The acceptable tolerance envelope for absolute elevation of any point on the slab surface, with respect to the elevation shown on the Drawings, is as follows:
   a. Slab-on-Grade Construction: +/- ¾”
   b. Top surfaces of formed slabs measured prior to removal of supporting shores: +/- ¾”
   c. Top surfaces of all other slabs: +/- ¾”
   d. Slabs specified to slope shall have a tolerance from the specified slope of 1/8” in 10’-0” at any point, up to ¾” from theoretical elevation at any point.

H. Remedial Measures for Slab Finish Construction not Meeting Specified Tolerances:
1. Application of Remedial Measures. Remedial measures specified herein are required whenever specified tolerances are exceeded

2. Modification of Existing Surface:
   a. If, in the opinion of the Architect or Owner's representative, all or any portion of the substandard work can be repaired without sacrifice to the appearance or serviceability of the area, the Contractor shall immediately undertake the approved repair method.
   b. The Contractor shall submit for review and approval a detailed work plan of the proposed repair showing areas to be repaired, method of repair, and time required to make the repair.
   c. Repair method(s), at the sole discretion of the Architect or Owner's Representative, may include grinding (floor stoning), planing, retopping with specified floor leveling compound, or any combination of the above.
   d. All repair work shall be performed at no additional cost to the Owner and with no extension to the construction schedule.
3. Removal and Replacement:
   a. If, in the opinion of the Architect/Engineer or Owner's Representative, all or any portion of the substandard work cannot be satisfactorily repaired without sacrifice to the appearance or serviceability of the area, the Contractor shall remove and replace the defective work as directed.
   b. Replacement sections may be retested for compliance at the discretion of the Architect/Engineer or Owner's Representative.
   c. All replacement work shall be performed at no additional cost to the Owner and with no extension to the construction schedule.

END OF SECTION

SECTION 04065

MASONRY MORTAR AND GROUT

PART 1 - GENERAL

1.1 SUMMARY

A. Section includes mortar and grout for masonry.

B. Related Sections:
1. Section 04210 – Stone Masonry
2. Section 04600 – Cast Stone
3. Section 04820 - Reinforced Unit Masonry Assemblies: Installation of mortar and grout
4. Section 08115 - Standard Steel Frames: Grouting steel door frames

1.2 REFERENCES

A. ASTM International:
1. ASTM C91 - Standard Specification for Masonry Cement
2. ASTM C94 - Standard Specification for Ready-Mixed Concrete
3. ASTM C143/C143M - Standard Test Method for Slump of Hydraulic Cement Concrete
4. ASTM C144 - Standard Specification for Aggregate for Masonry Mortar
5. ASTM C150 - Standard Specification for Portland Cement
6. ASTM C199 - Standard Test Method for Pier Test for Refractory Mortars
7. ASTM C270 - Standard Specification for Mortar for Unit Masonry
8. ASTM C387 - Standard Specification for Packaged, Dry, Combined Materials for Mortar and Concrete
9. ASTM C404 - Standard Specification for Aggregates for Masonry Grout
10. ASTM C476 - Standard Specification for Grout for Masonry
11. ASTM C595 - Standard Specification for Blended Hydraulic Cements
12. ASTM C1019 - Standard Test Method for Sampling and Testing Grout
13. ASTM C1314 - Standard Test Method for Constructing and Testing Masonry Prisms Used to Determine Compliance with Specified Compressive Strength of Masonry
14. ASTM C1329 - Standard Specification for Mortar Cement
15. ASTM C1357 - Standard Test Method for Evaluating Masonry Bond Strength.

B. The Masonry Society:
1. TMS MSJC - Building Code for Masonry Structures (ACI 530/ASCE 5/TMS 402), Specification for Masonry Structures (ACI 530.1/ASCE 6/TMS 602) and Commentaries.

1.3 SUBMITTALS

A. Section 01330 - Submittal Procedures: Submittal requirements.

B. Samples: Submit two, 2” cube samples of mortar, illustrating mortar color and color range.

C. Design Data: Submit design mix when Property specification of ASTM C270 is to be used, required environmental conditions, and admixture limitations.

D. Test Reports:
1. Submit reports on mortar indicating conformance of mortar to property requirements of ASTM C270 and test and evaluation reports to ASTM C780 for aggregate ratio and water content, air content, consistency and compressive strength.
2. Submit reports on grout indicating conformance of component grout materials to requirements of ASTM C476 and test and evaluation reports to ASTM C1019.

E. Manufacturer's Installation Instructions: Submit premix mortar Manufacturer's installation instructions.

F. Material Certificates: Include statements of material properties indicating compliance with requirements including compliance with standards and type designations within standards. Provide for each type and size of the following:
1. Cementitious materials. Include brand, type, and name of Manufacturer
2. Preblended, dry mortar mixes. Include description of type and proportions of ingredients.

G. Manufacturer's Certificate: Certify products meet or exceed specified requirements.

1.4 QUALITY ASSURANCE

A. Perform Work in accordance with TMS MSJC Code and TMS MSJC Specification.

B. Maintain one copy of each document on site.

C. Source Limitations for Mortar Materials: Obtain mortar ingredients of a uniform quality, including color for exposed masonry, from a single Manufacturer for each cementitious component and from one source or producer for each aggregate.

1.5 DELIVERY, STORAGE, AND HANDLING

A. General: Comply with Section 01400 – Quality Requirements

B. Ordering: Comply with Manufacturer’s ordering instructions and lead time requirements to avoid construction delays.

C. Packing, Shipping, Handling and Unloading: Per Manufacturer.

D. Delivery: Deliver materials in Manufacturer’s original, unopened, undamaged containers with identification labels intact.

E. Storage and Protection: Store materials protected from exposure to harmful weather conditions and at temperature conditions recommended by Manufacturer. Store materials in clean, dry, sheltered area, off ground, until used.

F. Store aggregates where grading and other required characteristics can be maintained and contamination avoided.

G. Deliver preblended, dry mortar mix in moisture-resistant containers designed for lifting and emptying into dispensing silo. Store preblended, dry mortar mix in delivery containers on elevated platforms, under cover, and in a dry location or in a metal dispensing silo with weatherproof cover.

H. Store masonry accessories, including metal items, to prevent corrosion and accumulation of dirt and oil.

1.6 ENVIRONMENTAL REQUIREMENTS

A. Section 01600 - Product Requirements.

B. Hot and Cold Weather Requirements: TMS MSJC Specification.

PART 2 - PRODUCTS

2.1 MORTAR AND MASONRY GROUT

A. Manufacturers:
1. CTS Cement Manufacturing Co.
2. Lehigh Portland Cement
3. The Quikrete Companies
4. Southern Grouts and Mortars
5. Substitutions: Section 01600 - Product Requirements.

2.2 COMPONENTS

A. Portland Cement: ASTM C 150, Type I or II, except Type III may be used for cold-weather construction. Provide natural color or white cement as required to produce mortar color indicated.

B. Hydrated Lime: ASTM C 207, Type S.

C. Portland Cement-Lime Mix: Packaged blend of portland cement complying with ASTM C 150, Type I or Type III, and hydrated lime complying with ASTM C 207, Type S.

D. Colored Cement Product: Packaged blend made from portland cement and lime and mortar pigments, all complying with specified requirements, and containing no other ingredients.

1. Formulate blend as required to produce color indicated or, if not indicated, as selected from Manufacturer's standard colors.
2. Pigments shall not exceed 10 percent of portland cement by weight.
3. Products:
   a. Colored or white Portland Cement-Lime Mix:
      1) Capital Materials Corporation; Riverton Portland Cement Lime Custom Color
      2) Holcim (US) Inc.; Rainbow Mortamix Custom Color Cement/Lime
      3) Lafarge North America Inc.; Eaglebond
      4) Lehigh Cement Company; Lehigh Custom Color Portland/Lime Cement.

E. Aggregate for Mortar: ASTM C 144.
1. For mortar that is exposed to view, use washed aggregate consisting of natural sand or crushed stone.
2. For joints less than 1/4 inch thick, use aggregate graded with 100 percent passing the No. 16 sieve.

F. Cold-Weather Admixture: Nonchloride, noncorrosive, accelerating admixture complying with ASTM C 494/C 494M, Type C, and recommended by Manufacturer for use in masonry mortar of composition indicated.
1. Products:
   a. Euclid Chemical Company (The); Accelguard 80
   b. Grace Construction Products, a unit of W. R. Grace & Co. - Conn.; Morset
   c. Sonneborn, Div. of ChemRex; Trimix-NCA.

G. Grout Aggregate: ASTM C404, fine and coarse.

H. Water: Clean and potable.

I. Calcium chloride is not permitted.

2.3 MIXES

A. Mortar Mixes: General: Do not use admixtures, including pigments, air-entraining agents, accelerators, retarders, water-repellent agents, antifreeze compounds, or other admixtures, unless otherwise indicated.
1. Do not use calcium chloride in mortar.
2. Limit cementitious materials in mortar to portland cement and lime.
3. Add cold-weather admixture (if used) at same rate for all mortar that will be exposed to view, regardless of weather conditions, to ensure that mortar color is consistent.

B. Preblended, Dry Mortar Mix: Furnish dry mortar ingredients in form of a preblended mix. Measure quantities by weight to ensure accurate proportions, and thoroughly blend ingredients before delivering to Project site.

C. Mortar for Unit Masonry: Comply with ASTM C 270, Proportion Specification. Provide the following types of mortar for applications stated unless another type is indicated or needed to provide required compressive strength of masonry.
   1. For exterior, above-grade, non-load-bearing walls and for other applications where another type is not indicated, use Type N.

D. Pigmented Mortar: Use colored cement product.

E. Mortar Mixing:
   1. Thoroughly mix mortar ingredients in accordance with ASTM C270 in quantities needed for immediate use.
   2. Achieve uniformly damp sand immediately before mixing process.
   3. Add mortar color and admixtures to achieve uniformity of mix and coloration.
   4. Re-temper only within two hours of mixing.

F. Grout Mixes:
   1. Grout for Non-Structural Masonry: 2,000 psi strength at 28 days; 8-11 inches slump; mixed in accordance with ASTM C476 Fine grout.
   2. Grout for Structural Masonry: 2,500 psi strength at 28 days; 8-11 inches slump; mixed in accordance with ASTM C476 Fine grout.
   3. Application:
      a. Coarse Grout: For grouting spaces with minimum 4 inches dimension in every direction.
      b. Fine Grout: For grouting other spaces.

G. Grout Mixing:
   1. Thoroughly mix grout ingredients in quantities needed for immediate use in accordance with ASTM C476.
   2. Add admixtures; mix uniformly.

PART 3 - EXECUTION

3.1 EXAMINATION

A. Section 01300 - Administrative Requirements: Coordination and project conditions.

B. Request inspection of spaces to be grouted.

3.2 PREPARATION

A. Apply bonding agent to existing concrete surfaces.

3.3 INSTALLATION

A. Install mortar and grout in accordance with TMS MSJC Specification.

3.4 FIELD QUALITY CONTROL

A. Section 01400 - Quality Requirements: Testing and Inspection Services 01700 - Execution Requirements: Testing, adjusting, and balancing.

B. Establishing Mortar Mix: In accordance with ASTM C270.

C. Testing of Grout Mix: In accordance with ASTM C1019 for compressive strength, and in accordance with ASTM C143/C143M for slump.

D. Test flexural bond strength of mortar and masonry units to ASTM C1357; test in conjunction with masonry unit sections specified.

E. Test compressive strength of mortar and masonry to ASTM C1314; test in accordance with masonry unit sections specified.

END OF SECTION

SECTION 04210

STONE MASONRY

PART 1 - GENERAL

1.1 SUMMARY

A. Section includes cut and rubble stone veneer at exterior walls; metal anchors and accessories; mortar and masonry flashing.

B. Related Sections:
1. Section 04090 - Masonry Accessories
2. Section 04100 - Mortar: Bedding and pointing mortar
3. Section 04600 – Cast Stone
4. Section 05500 - Metal Fabrications: Product requirements for metal fabricated items for building into stone masonry for placement by this section
5. Section 07900 - Joint Sealants: Sealant for perimeter, control, and expansion joints.

1.2 REFERENCES

A. American Society for Testing and Materials:
1. ASTM A36/A36M - Standard Specification for Carbon Structural Steel
2. ASTM A153/A153M - Standard Specification for Zinc Coating (Hot-Dip) on Iron and Steel Hardware
3. ASTM A580/A580M - Standard Specification for Stainless Steel Wire
4. ASTM C568 - Standard Specification for Limestone Dimension Stone.

B. The Masonry Society:
1. TMS MSJC - Building Code for Masonry Structures (ACI 530/ASCE 5/TMS 402), Specification for Masonry Structures (ACI 530.1/ASCE 6/TMS 602) and Commentaries.

1.3 SUBMITTALS

A. Section 01330 - Submittal Procedures.

B. Product Data: Submit data on stone units, mortar products, reinforcement, wall tiles, anchors, and flashings.

C. Samples:
1. Submit two (2) stone samples illustrating minimum and maximum stone sizes, color range of each color required and texture.
2. Submit mortar color samples.

1.4 QUALIFICATIONS

A. Manufacturer: Company specializing in manufacturing products specified in this section with minimum three years of documented experience.

B. Installer: Company specializing in performing Work of this section with minimum three years of documented experience.

1.5 MOCKUP

A. Section 01400 - Quality Control Procedures: Mockup requirements.

B. Construct stone wall mockup, 6 feet long by 5 feet high, including stone, backup masonry, reinforcing, wall ties, mortar, sill and head flashings, corner condition, and typical control joint. Provide mock-up panels and retain until approved by Architect.

C. Locate where directed by Architect/Engineer.

D. Remove mockup when directed by Architect/Engineer.

1.6 PRE-INSTALLATION MEETINGS

A. Section 01300 - Administrative Requirements: Pre-installation meeting.

B. Convene minimum one week prior to commencing work of this section.

1.7 DELIVERY, STORAGE, AND HANDLING

A. Section 01400 - Quality Control Procedures: Product storage and handling requirements.

B. Protect stone from discoloration during storage on site.

C. Provide ventilation to prevent condensation from forming on stone.

1.8 ENVIRONMENTAL REQUIREMENTS

A. Hot and Cold Weather Requirements: TMS MSJC Specification.

PART 2 - PRODUCTS

2.1 MORTAR PLACED STONE ASSEMBLIES

A. Manufacturer:
1. San Jacinto Materials, Inc.
San Antonio, TX 78707; or approved equal.

2.2 LIMESTONE VENEER COLOR SCHEDULE

A. Limestone Color: " Old Yeller" – as manufactured by San Jacinto Materials, Inc. , San Antonio, TX. 78707, (210) 736-0924.

B. Surface Texture: Split face.

C. Mortar and Grout: As specified in Section 04210.

D. Mortar Joint Color – Color to match limestone veneers, or as approved by Architect.

2.3 ACCESSORIES

A. Horizontal Joint Reinforcement: Ladder type, stainless steel wire conforming to ASTM A580/A580M Type 304, 3/16 inch side rods with 3/16 inch cross ties.

B. Wall Ties: Formed steel wire, 10 gage diameter, stainless steel conforming to ASTM A580/A580M, wire loop for embedment in back-up masonry, with provision for vertical adjustment after attachment.

C. Other Anchors in Direct Contact with Stone: ASTM A666, Type 304, stainless steel, of sizes and configurations required for support of stone and applicable superimposed loads.

D. Setting Buttons and Shims: Plastic.

E. Through-wall Flashings: Sheet copper; 16oz/sq ft thick. Copper-Laminated Flashing: Manufacturer's standard laminated flashing consisting of 5-oz./sq. ft. sheet copper bonded with asphalt between 2 layers of glass-fiber cloth. Use only where flashing is fully concealed in masonry. Acceptable Copper-Laminated Flashing Manufacturers:
1. Copper Fabric Flashing; Advanced Building Products, Inc.
2. Copper Fabric; AFCO Products, Inc.
3. H & B C-Fab Flashing; Hohmann & Barnard, Inc.
4. Type FCC-Fabric Covered Copper; Phoenix Building Products
5. Copper Fabric Flashing; Polytite Manufacturing Corp.
6. Copper Fabric Flashing; Sandell Manufacturing Co., Inc.
7. York Copper Fabric Flashing; York Manufacturing, Inc.

F. Masonry Cavities: Masonry Mat-full height.

G. Joint Filler: Closed cell foam

H. Cleaning Solution: Non-acid, not harmful to stone, joint materials, or adjacent surfaces.

I. Description: Airspace Maintenance and Cavity Drainage Mat. The masonry mat shall be specifically designed for masonry cavities to prevent mortar from making contact with the backup and ensure water management. The masonry mat shall be fluid conducting, non-absorbent, mold and mildew resistant polymer mesh consisting of 100% recycled plastic with binder. Masonry mat is to be a non-woven textile product in random pattern and have voids no greater than 1/4" in diameter. Masonry mat is to be installed substantially continuous behind masonry at bottom of airspace or at lintels – 16” high; full length.
   a. Manufacturer: CAVCLEAR / ARCHOVATIONS, Inc. Contact: P.O. Box 241, Hudson, WI 54016 Telephone: (715) 381-5773 Fax: (715) 381-9883, Website: www.cavclear.com

J. Thickness: Select masonry mat thickness of 1-1/4 inches to allow no more than 3/8 inch tolerance between the masonry mat and masonry wythe.

K. Sizes: 16 inch x 8 foot pieces. 8 inch x 8 foot pieces when needed to accommodate other building components.

L. Available Stone Mat size: 1” thickness by 16” x 96".

M. Masonry Mat: Cavity Airspace Maintenance and Drainage Material

N. Weep Vents: 3/8” nylon rope in the vertical joints of masonry.

O. Color as selected from Manufacturer standard.

2.4 FABRICATION

A. Nominal Thickness: 4 inch

B. Nominal Face Size: Random size and shape, roughly square and/or rectangular, as shown on drawings.

C. Pattern and Coursing: Set random size stone at random and irregular coursing; and cut stone at running bond coursing as shown in drawings .

D. Fabricate for random size stone, ½” to 2” mortar beds and joints; and for cut stone at 3/8” mortar bed and joints.

E. Slope exposed top surfaces of stone and horizontal sill surfaces for shedding water.

PART 3 - EXECUTION

3.1 EXAMINATION

A. Section 01310 - Construction Schedules.

B. Verify support work and site conditions are ready to receive work of this section.

C. Verify items built-in under other sections are properly located and sized.

3.2 PREPARATION

A. Establish lines, levels, and coursing. Protect from disturbance.

B. Clean interior stone prior to erection. Do not use wire brushes or implements that mark or damage exposed surfaces.

C. Coat cavity surfaces with damp-proofing prior to setting. Allow coating to cure.

D. Clean sawn surfaces of rust stains and iron particles.

3.3 INSTALLATION

A. Install flashings of longest practical length and seal watertight to back-up. Lap end joints minimum 6 inches and seal watertight.

B. Cut and or split stone at site to produce clean faces.

C. Size stone units to fit opening dimensions and perimeter conditions.

D. Wet absorptive stone in preparation for placement to minimize moisture suction from mortar.

E. Arrange stone pattern in color uniformity and minimize visual variations.

F. Arrange cut-stone coursing in running bond with consistent joint width.

G. Set stone in full mortar setting bed to fully support stone over bearing surface. Use setting buttons or shims to maintain correct joint width.

H. Reinforcement And Anchorage:
1. Attach wall ties to back-up to bond veneer to back-up at maximum 16 inches oc vertically and 36 inches oc horizontally, or a min. of one for every 2-2/3 sq. ft.

I. Joints:
1. Pack mortar into joints and work into voids. Finish mortar joints with rubbed burlap sack finish or as per sample location shown on plans.
2. At joints to be sealed, clean mortar out of joint before mortar sets. Brush joints clean.
3. Seal joints indicated with sealant. Perform sealant work in accordance with requirements of Section 07920

J. Accessories:
1. Install cavity vents at top of each cavity space, at spacing of 24 inches on center, horizontally.
2. Install weeps in vertical stone joints at 24 inches on center, horizontally; immediately above horizontal flashings, above shelf angles and supports, and at bottom of walls. Do not permit mortar accumulation in cavity space.

K. Install masonry mat continuously throughout the full-height of exterior masonry cavities during construction of exterior wythe; follow Manufacturer's installation instructions.

L. Install horizontally between wall ties, stagger end joints in adjacent rows.

M. Use multiple layers at bottom of wall and above through-wall flashings when air space depth exceeds masonry mat thickness by more than 3/8inch. Extend extra mat at least to top of base flashing.

N. Butt adjacent pieces to moderate contact. Fit to perimeter construction and penetrations without voids.

O. Place rope vents in head joints at exterior wythe of cavity wall located immediately above ledges and flashing, spaced 48 inches on center, unless otherwise shown. Extend rope into cavity at least 2" and cut excess flush with face of masonry.

3.4 FIELD QUALITY CONTROL

A. Section 01400 - Quality Control Procedures: Testing and Inspection

B. Testing of Mortar and Grout: In accordance with Section 04810

3.5 CLEANING

A. Section 01700 - Execution Requirements: Final cleaning.

B. Remove excess mortar as work progresses, and upon completion of work.

C. Clean soiled surfaces with non-acid cleaning solution.

D. Use non-metallic tools in cleaning operations.

3.6 PROTECTION OF INSTALLED CONSTRUCTION

A. Section 01700 - Execution Requirements: Protecting installed construction.

B. During temporary storage on site, at end of working day, and during rainy weather, cover stone work exposed to weather with non-staining waterproof coverings, securely anchored.

END OF SECTION

SECTION 04600

CAST STONE

PART 1 - GENERAL

1.1 DESCRIPTION

A. Provide cast stone star as shown on drawings.

1.2 SHOP DRAWINGS

A. Submit for approval, shop drawings and color selection samples.

PART 2 - PRODUCTS

2.1 MATERIALS

A. Cast Stone Materials: Color as selected by Architect. The stone materials shall conform to the following specifications (latest editions) of the American Society for Testing and Materials:
   1. Portland cement: Type I, II, or III, specifications for Portland cement, ASTM C150. Approved non-shrink Portland cement may be used at the Manufacturer's option.
   2. Aggregates: As per Manufacturer's standards.
   3. Reinforcement steel:
      a. "Billet-Steel Bars for Concrete Reinforcement," ASTMA15
      b. "Rail-Steel Bars for Concrete Reinforcement," ASTM A16
      c. "Axle-Steel Bars for Concrete Reinforcement," ASTM A160
      d. "Wire for Concrete Reinforcement," ASTM A92
      e. "Welded Steel Wire Fabric for Concrete Reinforcement," ASTM A185.
   4. Water: Water shall be clean and free from deleterious substances.

B. Mortar: Mortar used in installing all stone shall conform to specifications for "Mortar for Unit Masonry," ASTM C20 (latest edition) Type "S", except the mortar shall be proportioned as follows:
   1. One (1) part Portland cement
   2. One-half (1/2) part Type "S" hydrated lime
   3. Four and one-half (4 ½) parts sand.

C. Reinforcement: The stone shall be reinforced with welded wire fabric and/or steel reinforcement bars. Galvanized reinforcement shall be used where minimum cover of one-half (1/2) inch cannot be maintained.

D. Anchors:
   1. Galvanized steel anchors shall be case into the stone.
   2. Bolts and cramp anchor grooves shall be cast into the stone.

E. Waterproofing: One (1) coat of three percent (3%) silicone waterproofing shall be applied to the face of all stone before delivery to the jobsite.

F. Finish: All stone shall conform to the sample on file with the Architect.

G. Waterproofing Sealer:
   1. Equal to sure Klean "Weather Seal Siloxane PD" as manufactured by Prosoco, Inc., Dallas, Texas. Provide Manufacturer's 10 year warranty.

PART 3 - EXECUTION

3.1 INSTALLATION

A. Joints: All joints shall be ¼ inch or as shown on drawings. Joints shall be filled with Type "S" mortar as the stone is set. Mortar shall have an approved non-shrink additive and be waterproofed with Master Builders "Omicron" or equal. Face joints shall be raked to a depth of ¾ inch and pointed with white mortar. Caulking compound shall be a polysulfide rubber sealant or approved equal. After caulking, the joints shall be pointed with white mortar.

B. Patching: Patching of minor defects will be permitted, if performed with the proper materials, by skilled craftsmen and to the Architect's satisfaction.

C. Cleaning: After stone is installed, all foreign matter shall be removed from the surface of the stone using a stiff fiber brush, Dutch cleanser or equal and clear water. Acid shall not be used in cleaning.

END OF SECTION

SECTION 04820

REINFORCED UNIT MASONRY ASSEMBLIES

PART 1 - GENERAL

1.1 SUMMARY

A. Section includes face brick and concrete masonry units; anchorage and accessories.

B. Related Sections:
1. Section 04065 - Masonry Mortar and Grout: Mortar and grout
2. Section 05500 - Metal Fabrications: Product requirements for loose steel lintels and fabricated steel items for placement by this section
3. Section 07260 - Vapor Retarders: Vapor retarder membrane placed
4. Section 07840 - Firestopping: Firestopping at penetrations of masonry work
5. Section 07900 - Joint Sealers: Rod and sealant at control and expansion joints.

1.2 REFERENCES

A. ASTM International:
1. ASTM A153/A153M - Standard Specification for Zinc Coating (Hot-Dip) on Iron and Steel Hardware
2. ASTM A580/A580M - Standard Specification for Stainless Steel Wire
3. ASTM A615/A615M - Standard Specification for Deformed and Plain Billet-Steel Bars for Concrete Reinforcement
4. ASTM A641/A641M - Standard Specification for Zinc-Coated (Galvanized) Carbon Steel Wire
5. ASTM A653/A653M - Standard Specification for Steel Sheet, Zinc-Coated (Galvanized) or Zinc-Iron Alloy-Coated (Galvannealed) by the Hot-Dip Process
6. ASTM A951 - Standard Specification for Masonry Joint Reinforcement
7. ASTM B370 - Standard Specification for Copper Sheet and Strip for Building Construction
8. ASTM C55 - Standard Specification for Concrete Brick
9. ASTM C62 - Standard Specification for Building Brick (Solid Masonry Units Made From Clay or Shale)
10. ASTM C67 - Standard Test Methods for Sampling and Testing Brick and Structural Clay Tile
11. ASTM C129 - Standard Specification for Nonloadbearing Concrete Masonry Units
12. ASTM C140 - Standard Test Methods of Sampling and Testing Concrete Masonry Units
13. ASTM C216 - Standard Specification for Facing Brick (Solid Masonry Units Made from Clay or Shale)
14. ASTM C652 - Standard Specification for Hollow Brick (Hollow Masonry Units Made From Clay or Shale)
15. ASTM C744 - Standard Specification for Prefaced Concrete and Calcium Silicate Masonry Units

16. ASTM D226 - Standard Specification for Asphalt-Saturated Organic Felt Used in Roofing and Waterproofing.

B. The Masonry Society:
   1. TMS MSJC - Building Code for Masonry Structures (ACI 530/ASCE 5/TMS 402), Specification for Masonry Structures (ACI 530.1/ASCE 6/TMS 602) and Commentaries.

1.3 SUBMITTALS

A. Section 01330 - Submittal Procedures: Submittal requirements.

B. Samples for Initial Selection for the following:
   1. Face brick, in the form of straps of five or more bricks demonstrating full range of color include data for special shapes
   2. Colored mortar.
   3. Color Charts for mortar color.
   4. Concrete Masonry Units full range facing unit colors to the Architect for Selection

C. Shop Drawings: Indicate bars sizes, spacings, locations, reinforcement quantities, bending and cutting schedules, supporting and spacing devices for reinforcement, and accessories.

D. Product Data: Submit data for masonry units and fabricated wire reinforcement, wall ties, anchors, cement, lime and other accessories.

E. Samples: Submit five samples of units to illustrate color, texture and extremes of color range.

F. Design Data: Indicate required mortar strength, specified compressive strength of masonry, masonry unit assembly strength in each plane, and supportive test data.

G. Manufacturer's Certificate: Certify products meet or exceed specified requirements.

H. Project Foreman; Project experience

1.4 QUALITY ASSURANCE

A. Perform Work in accordance with TMS MSJC Code and TMS MSJC Specification.

B. Maintain one copy of each document on site.

C. FOREMAN: Provide an experienced and competent foreman. The foreman shall be in constant charge of the work and shall supervise work to see that it is carried out in strict accordance with the plans and specifications.

D. MEASUREMENT CONTROL: Submit proposed procedure for maintaining mortar proportion to Architect for approval. Once approval, insure quality control is maintained

and procedure is not varied. Measurement of mortar ingredients may be by volume using a container of known capacity or by weight, using scales.

E. Source Limitations for Masonry Units: Obtain exposed masonry units of a uniform texture and color, or a uniform blend within the ranges accepted for these characteristics, through one source from a single Manufacturer for each product required.

F. Source Limitations for Mortar Materials: Obtain mortar ingredients of a uniform quality, including color for exposed masonry, from a single Manufacturer for each cementitious component and from one source or producer for each aggregate.

1.5 QUALIFICATIONS

A. Installer: Company specializing in performing Work of this section with minimum three years documented experience.

1.6 MOCKUP

A. Section 01400 - Quality Requirements: Mock-up requirements.

B. Construct reinforced masonry wall mockup, 4 feet long by 4 feet high, including masonry, mortar and accessories, in permanent wall location for approval by Architect.

C. Locate where directed by Architect/Engineer. The sample panel shall be constructed on the back side of the building and shall be protected from damage until masonry work is approved by Architect. The approved panel shall be used as a standard to judge all masonry laid on the project. Masonry work not equal to the sample in the opinion of the Architect shall be removed and re-laid. Use sample panel to test cleaning products.

1.7 PRE-INSTALLATION MEETINGS

A. Section 01300 - Administrative Requirements: Pre-installation meeting.

B. Convene minimum two weeks prior to commencing work of this section.

1.8 DELIVERY, STORAGE, AND HANDLING

A. Section 01600 - Product Requirements: Product storage and handling requirements.

B. Accept units on site. Inspect for damage.

C. Store masonry units on elevated platforms in a dry location. If units are not stored in an enclosed location, cover tops and sides of stacks with waterproof sheeting, securely tied. If units become wet, do not install until they are dry.

D. Store cementitious materials on elevated platforms, under cover, and in a dry location. Do not use cementitious materials that have become damp.

E. Store aggregates where grading and other required characteristics can be maintained and contamination avoided.

F. Deliver preblended, dry mortar mix in moisture-resistant containers designed for lifting and emptying into dispensing silo. Store preblended, dry mortar mix in delivery containers on elevated platforms, under cover, and in a dry location or in a metal dispensing silo with weatherproof cover.

G. Store masonry accessories, including metal items, to prevent corrosion and accumulation of dirt and oil.

1.9 ENVIRONMENTAL REQUIREMENTS

A. Section 01600 - Product Requirements.

B. Protection of Masonry: During construction, cover tops of walls, projections, and sills with waterproof sheeting at end of each day's work. Cover partially completed masonry when construction is not in progress.
1. Extend cover a minimum of 24 inches down both sides and hold cover securely in place.

C. Stain Prevention: Prevent grout, mortar, and soil from staining the face of masonry to be left exposed or painted. Immediately remove grout, mortar, and soil that come in contact with such masonry.
1. Protect base of walls from rain-splashed mud and from mortar splatter by spreading coverings on ground and over wall surface.
2. Protect sills, ledges, and projections from mortar droppings.
3. Protect surfaces of window and door frames, as well as similar products with painted and integral finishes, from mortar droppings.
4. Turn scaffold boards near the wall on edge at the end of each day to prevent rain from splashing mortar and dirt onto completed masonry.

D. Hot and Cold Weather Requirements: TMS MSJC Specification.

1.10 COORDINATION

A. Section 01300 - Administrative Requirements: Coordination and project conditions.

B. Coordinate masonry work with metal panels, installation of window and door anchors.

1.11 EXTRA MATERIALS

A. Section 01700 - Execution Requirements: Spare parts and maintenance products.

B. Supply 50 of each size, color, and type of brick units.

PART 2 - PRODUCTS

2.1 REINFORCED UNIT MASONRY ASSEMBLIES

A. Manufacturers:
1. Acme Brick Co.
2. Elgin Butler Brick Co.
3. Southern Brick
4. Hanson Brick
5. Featherlite Building Products
6. Southwest Concrete Products
7. Substitutions: Section 01600 - Product Requirements.

2.2 COMPONENTS

A. CONCRETE MASONRY UNITS (CMU): Lightweight cement block, autoclave concrete masonry units conforming to ASTM C90, Type I Grade N for load bearing walls, and ASTM C129, Type I for non-bearing units. Provide all available sizes and shapes necessary to complete the project. Inside corners shall be square. Color as selected by Architect to match stone.
1. Split face
2. Special units having a vertical groove center on the end for control joints.
3. Continuous neoprene extruded key which fits into the grooves and lock the units together

B. Concrete Masonry Unit Size and Shape: Nominal modular size of 7-5/8” x 7-5/8” x 15-5/8” inches. Furnish special units for 90 degree corners, bond beams, lintels, and bullnosed corners.

2.3 ACCESSORIES

A. CMU - Horizontal reinforcing shall be a trussed-type reinforcing fabricated of No. 9 gauge galvanized steel bars; A-A Wire Products Company, "Blok-Truss", Dur-O-Wall Products Company, "Dur-O-Wall", Dayton Superior, "Ty-Wall", or approved equal. Reinforcing for exterior walls shall have three (3) continuous rods. Reinforcing for partitions may be two (2) bar type up to 12 inch wall thickness and three bar type for thickness over 12 inches. Reinforcing width shall be approximately 2" less than the combined wall thickness. Provide prefabricated corner units at all corners and tee sections at intersecting partitions.

B. Reinforcing Steel: ASTM A615/A615M, 60 ksi yield grade, deformed billet bars, uncoated finish.
1. Reinforcing in grouted masonry construction and for horizontal reinforcing used in bond beams and masonry lintels.

C. Mortar and Grout: As specified in Section 04065.

D. Adhesives, Primers, and Seam Tapes for Flashings: Flashing Manufacturer's standard products or products recommended by flashing Manufacturer for bonding flashing sheets to each other and to substrates.

E. Sealant: type as specified in Section 07900.

F. Preformed Control Joints: Rubber or Polyvinyl chloride material. Furnish with corner and tee accessories, heat fused joints.
   1. CONTROL JOINTS: Extruded rubber control joint meeting requirements of ASTM D735-RS710, or durometer hardness 80 extruded PVC conforming to ASTM D2287, as manufactured by Hohmann and Barnard, Inc., or approved equal.

G. Building Paper: ASTM D226, No. 15 asphalt saturated felt.

H. Cleaning Solution: Non-acidic, not harmful to masonry work or adjacent materials, per Manufacturer recommendation.
   1. MASONRY CLEANER: Hallmark "DC 6", Sonneborn "Sonoclean 88", or ProSoCo "SureKleen", mixed and used according to the Manufacturers printed instructions.

I. Anchor Bolts: Steel bolts complying with ASTM A307, Grade A having ASTM A563 hexhead nuts and flat washer, hot dipped galvanized.

J. Steel Lintels: Reference Section 05500 Metal Fabrications, hot-dip galvanized. See structural drawings.

PART 3 - EXECUTION

3.1 EXAMINATION

A. Section 01300 - Administrative Requirements: Coordination and project conditions.

B. Verify field conditions are acceptable and are ready to receive work.

C. Verify items provided by other sections of work are properly sized and located.

D. Verify built-in items are in proper location, and ready for roughing into masonry work.

E. Proceed with installation only after unsatisfactory conditions have been corrected.

3.2 PREPARATION

A. Direct and coordinate placement of metal anchors supplied to other Sections.

B. Furnish temporary bracing during installation of masonry work. Maintain in place until building structure provides permanent support.

C. Furnish and maintain saw-cut masonry units, as necessary to fit around all structural elements, to fit built-in, to maintain bond and coursing, or as required by job conditions. Cuts shall be neat, and clean. Units shall be cut to proper size to maintain 3/8" thick mortar coursing.

D. SCAFFOLDING

1. Provide, erect and maintain scaffolding for this work. Make it available for other trades requiring execution of work associated with masonry. Scaffolding shall be of good construction, sturdy and conforming to all government ordinances and regulations. It shall be constructed or erected in a safe and substantial manner.

3.3 INSTALLATION

A. Establish lines, levels, and coursing indicated. Protect from displacement.
1. Lay out wall dimensions in advance to minimize masonry cutting and accurate location of openings, expansion joints, returns and offsets. Avoid use of less than 1/2 size masonry units. Do not tooth discontinued masonry. Instead, rack back 1/2 unit in both directions.

B. Maintain masonry courses to uniform dimension. Form bed and head joints of uniform thickness.

C. Coursing of Concrete Masonry Units:
1. Bond: standard running, align cores
2. Coursing: One unit and one mortar joint to equal 8 inches, modular coursing
3. Mortar Joints: Concave.

D. Placing And Bonding:
1. Lay solid masonry units in full bed of mortar, with full head joints.
2. Lay hollow masonry units with face shell bedding on head and bed joints.
3. Buttering corners of joints or excessive furrowing of mortar joints are not permitted.
4. Remove excess mortar as Work progresses.
5. Interlock intersections and external corners.
6. Do not shift or tap masonry units after mortar has achieved initial set. Where adjustment is required, remove mortar and replace.
7. Perform job site cutting of masonry units with proper tools to assure straight, clean, unchipped edges. Prevent broken masonry unit corners or edges. No damaged surfaces shall be exposed to view
8. Isolate masonry from vertical structural framing members with movement joint.
9. Isolate top of masonry from horizontal structural framing members and slabs or decks with compressible joint filler.

E. Building paper: Overlap per Manufacturer requirements and seal joints.

F. Joint Reinforcement And Anchorage:
1. Space anchors as indicated, but not more than 16 inches o.c. vertically and 16 inches o.c. horizontally with not less than 1 anchor for each 2.67 sq. ft. of wall

area. Install additional anchors within 12 inches of openings and at intervals, not exceeding 24 inches, around perimeter. Not less than 4 ties per surface (minimum).

2. Fasten screw-attached anchors through sheathing to wall framing with metal fasteners of type indicated. Use two fasteners.
3. Place masonry joint reinforcement in first and second horizontal joints above and below openings. Extend minimum 16 inches each side of opening.
4. Place joint reinforcement continuous in first and second joint below top of walls.
5. Lap joint reinforcement ends minimum 6 inches.
6. Support and secure reinforcing bars from displacement. Maintain position within 1/2 inch of dimensioned position.
7. Embed anchors attached to structural steel members. Embed anchorages in every second block or sixth brick joint.

G. Masonry Flashings:
1. Extend flashings horizontally through outer wythe at foundation walls, above ledge or shelf angles and lintels, and at bottom of walls, and turn down on outside face to form drip.
2. Turn flashing up minimum 12 inches, extend through sheathing, turn flashing up 3” and anchor to wall stud frame.
3. Lap end joints minimum 6 inches and seal watertight.
4. Turn flashing, fold, and seal at corners, bends, and interruptions.

H. Lintels:
1. Install loose steel lintels over openings.
2. Install reinforced unit masonry lintels over openings where steel or precast concrete lintels are not scheduled or indicated
3. Do not splice reinforcing bars.
4. Support and secure reinforcing bars from displacement.
5. Place and consolidate grout fill without displacing reinforcing.
6. Allow masonry lintels to attain specified strength before removing temporary supports.
7. Maintain minimum 8 inch bearing on each side of opening.

I. Grouted Components:
1. Reinforce bond beam per code requirement.
2. Lap splices bar diameters required by code.
3. Support and secure reinforcing bars from displacement.
4. Place and consolidate grout fill without displacing reinforcing.
5. At bearing locations, fill masonry cores with grout for minimum 12 inches either side of opening.
6. Fill cells of CMU on both sides of all openings and on both sides of control joints and expansion joints with type Class "B" Course Grout. Cells shall be reinforced with 1 - # 4 re-bar, or as noted in structural drawings. Grout shall be placed into the cells as the walls are constructed, otherwise not until the mortar has set.

J. Reinforced Masonry:
1. Lay masonry units with cells vertically aligned and cavities between wythes clear of mortar and unobstructed.

2. Place reinforcing, reinforcement bars, and grout.
3. Splice reinforcement in accordance with Section 03200.
4. Support and secure reinforcement from displacement.
5. Place and consolidate grout fill without displacing reinforcing.
6. Place grout in accordance with TMS MSJC Specification.
7. Where concrete masonry is noted to be grouted, cells containing reinforcing bars shall be filled solid with Class B grout. Grout shall not be poured until the mortar has set and cured, however, install grout as soon as possible. All cleanout closures, reinforcing, bolts and embedded items shall be in proper position before grouting is started.
8. Handle grout from the mixer to the point of deposit as rapidly as practical by methods which will prevent segregation of the mix and cause a minimum of grout splatter on reinforcing steel and masonry surfaces. Under normal weather conditions and typical masonry units, the individual lifts of grout shall be limited to four (4) feet in height with a waiting period between 30 and 60 minutes between lift placement. Depending upon weather conditions, the lift height and waiting conditions may be varied.
9. Place the first lift of grout to a uniform height and mechanically vibrate thoroughly to fill all voids. While the mortar is plastic and prior to initial set, the next lift should be poured and alternate cells vibrated 12 to 18 inches into the proceeding lift. Consolidate the proceeding lift and close any plastic shrinkage cracks or separations from the cell walls.
10. Arrange the work such that once grouting of a section of wall has started, the grouting shall proceed in lifts without stopping until the full height of the wall is poured. Reconsolidate the top lift after the required waiting period to fill any space left by settlement shrinkage.

K. Control And Expansion Joints:
1. Do not continue horizontal joint reinforcement through control and expansion joints.
2. Install preformed control joint device in continuous lengths. Seal butt and corner joints.
3. Size control joint in accordance with Section 07900 for sealant performance.
4. Form expansion joint by omitting mortar and cutting unit to form open space.
5. Install control joints at all exterior walls at both sides of door and window openings and at intervals not exceeding 20 ft centers. Control joints at doors shall begin at the upper edge of the door frame, in line with the outer jamb and shall extend the full height of the wall. Control joints at windows shall be along both edges of the opening, extending from the floor slab to the top of the wall.

L. Built-In Work:
1. As work progresses, install built-in metal door and glazed frames, fabricated metal frames, window frames, anchor bolts, and other items to be built-in the work and furnished by other sections.
2. Install built-in items plumb and level.
3. Bed anchors of metal door and glazed frames in adjacent mortar joints. Fill frame voids solid with grout or mortar. Fill adjacent masonry cores with grout minimum 12 inches from framed openings.

4. Adjust masonry anchors to masonry joints at equal spacings, not less than three each jamb and set in fresh mortar.
5. Do not build in materials subject to deterioration.

M. Cutting And Fitting:
1. Cut and fit for pipes, conduit, sleeves and grounds. Coordinate with other sections of work to provide correct size, shape, and location.
2. Obtain Architect/Engineer's approval prior to cutting or fitting masonry work not indicated or where appearance or strength of masonry work may be impaired.

3.4 ERECTION TOLERANCES

A. Section 01400 - Quality Requirements: Tolerances.

B. Maximum Variation From Alignment: 3/16" inch.

C. Maximum Variation From Unit to Adjacent Unit: 1/16 inch.

D. Maximum Variation from Plane of Wall: 1/4 inch in 10 ft and 3/8 inch in 20 ft or more.

E. Maximum Variation from Plumb: 1/4 inch per story non-cumulative.

F. Maximum Variation from Level Coursing: 1/8 inch in 3 ft and 1/4 inch in 20 ft; 1/2 inch in 40 ft.

G. Maximum Variation of Joint Thickness: 1/32 inch in 1 ft, (+ or -) 1/8 inch entire length of wall.

H. Maximum Variation from Cross Sectional Thickness of Walls: 1/4 inch.

3.5 FIELD QUALITY CONTROL

A. Section 01400 - Quality Requirements: Testing and Inspection Services 01700 - Execution Requirements: Testing, adjusting, and balancing.

B. Brick Units: Test each type in accordance with ASTM C67, 5 random units for each 50,000 units installed.

C. Concrete Masonry Units: Test each type in accordance with ASTM C140.

D. Remove and replace masonry units that are loose, chipped, broken, stained, or otherwise damaged or that do not match adjoining units. Install new units to match adjoining units; install in fresh mortar, pointed to eliminate evidence of replacement.

E. Pointing: During the tooling of joints, enlarge voids and holes, except weep holes, and completely fill with mortar. Point up joints, including corners, openings, and adjacent construction, to provide a neat, uniform appearance. Prepare joints for sealant application, where indicated.

3.6 CLEANING

A. Section 01700 - Execution Requirements: Final cleaning.

B. Remove excess mortar and mortar smears as work progresses.

C. Protect masonry against staining by installing wall coverings.

D. Replace defective mortar. Match adjacent work.

E. Thoroughly clean masonry. Clean soiled surfaces with cleaning solution.

F. Protect sash, metal lintels and other corrodible parts during cleaning.

G. Use non-metallic tools in cleaning operations.

3.7 MASONRY WASTE DISPOSAL

A. Materials: Unless otherwise indicated, excess masonry materials are Contractor's property. At completion of unit masonry work, remove from Project site.

END OF SECTION

SECTION 05312

STEEL ROOF DECK

PART 1 - GENERAL

1.1 SUMMARY

A. Section Includes:
1. Steel roof deck and accessories
2. Formed steel cant strips, eave strips, and valley strips
3. Framing for openings up to and including 18 inches
4. Bearing plates and angles.

B. Related Sections:
1. Section 05500 – Metal Fabrication
2. Section 13120 - Pre-Engineered Building.

1.2 REFERENCES

A. ASTM International:
1. ASTM A36/A36M - Standard Specification for Carbon Structural Steel
2. ASTM A653/A653M - Standard Specification for Steel Sheet, Zinc-Coated (Galvanized) or Zinc-Iron Alloy-Coated (Galvannealed) by the Hot-Dip Process
3. ASTM A924/A924M - Standard Specification for General Requirements for Steel Sheet, Metallic-Coated by the Hot-Dip Process
4. ASTM A1008/A1008M - Standard Specification for Steel, Sheet, Cold-Rolled, Carbon, Structural, High-Strength Low-Alloy and High-Strength Low-Alloy with Improved Formability.

B. American Welding Society:
1. AWS D1.1 - Structural Welding Code - Steel.

C. Steel Deck Institute:
1. SDI 29 - Design Manual for Composite Decks, Form Decks and Roof Decks.

D. SSPC: The Society for Protective Coatings:
1. SSPC Paint 15 - Steel Joist Shop Paint.

1.3 PERFORMANCE REQUIREMENTS

A. Design metal deck in accordance with SDI Design Manual.

B. Calculate to maximum structural working stress design of 20,000 psi and maximum vertical deck deflection of 1/360.

C. Design deck with maximum lateral diaphragm deflection of 1/500 of wall height.

1.4 SUBMITTALS

A. Section 01330 - Submittal Procedures: Submittal requirements.

B. Shop Drawings: Indicate deck plan, support locations, Projections, openings and reinforcement, pertinent details, method of welding deck to supporting members, and accessories.

C. Product Data: Submit deck profile characteristics and dimensions, structural properties, finishes, and special conditions.

D. Manufacturer’s Installation Instructions: Submit Manufacturer's installation instructions.

E. Manufacturer’s Certificates: Certify Products meet or exceed specified requirements.

F. Welders Certificates: Certify welders employed on the Work, verifying AWS qualification within previous 12 months.

1.5 QUALIFICATIONS

A. Installer: Company specializing in performing Work of this section with minimum three years documented experience.

B. Design deck layout, spans, fastening, joints, and under direct supervision of Professional Engineer experienced in design of this Work and licensed at Project location, in State of Texas.

1.6 DELIVERY, STORAGE, AND HANDLING

A. Section 01600 - Product Requirements: Product storage and handling requirements.

B. Cut plastic wrap to encourage ventilation.

C. Separate sheets and store deck on dry wood sleepers; slope for positive drainage.

PART 2 - PRODUCTS

2.1 MATERIALS

A. Manufacturers:
   1. United Steel Deck
   2. Vulcraft Steel Deck
   3. Wheeling Corrugating Co.
   4. Substitutions: Section 01600 - Product Requirements.

B. Sheet Steel: ASTM A653, Grade 33 Structural Quality; with G90 galvanized coating conforming to ASTM A525.

C. Bearing Plates and Angles: ASTM A36 steel, galvanized coating.

D. Welding Materials: AWS D1.1.

E. Touch-Up Primer for Galvanized Surfaces: SSPC 20 Type I - Inorganic.

2.2 ACCESSORIES

A. Flute Closures: Closed cell , 1 ½" inch thick; profiled to fit tight to deck.

B. Valley Strips, and Eave Strips: Fabricated of metal of same type and finish as deck.

2.3 FABRICATION

A. Metal Deck: Sheet steel, configured as follows:
1. Span Design: double
2. Minimum Metal Thickness Excluding Finish: 20 gage
3. Nominal Height: 1-1/2 inch, fluted profile to SDI WR
4. Formed Sheet Width: 32 or 36 inch
5. Side Joints: lapped
6. Flute Sides: plain vertical face.

B. Related Deck Accessories: Metal closure strips, cover plates, 20 gage thick galvanized sheet steel; of profile and size required.

C. Cant Strips: Formed sheet steel, 20 gage thick, 45 degree slope, 3 1/2 inch nominal width and height, flange for attachment.

D. Weld Washers: Mild steel, uncoated, 3/4 inch outside diameter, 1/8 inch thick.

PART 3 - EXECUTION

3.1 EXAMINATION

A. Section 01300 - Administrative Requirements: Coordination and project conditions.

3.2 INSTALLATION

A. Erect metal deck in accordance with SDI Manual.

B. Bear deck on masonry or concrete support surfaces with 4 inch minimum bearing. Align and level.

C. Bear deck on steel supports with 1-1/2 inch minimum bearing. Align and level. Deck sheets shall extend over three or more spans, where possible. End laps of sheets shall be a minimum of 2" and shall occur over supports.

D. Fasten deck to steel support members at ends and intermediate supports with fusion welds through weld washers at 12 inches oc maximum, parallel with deck flute and at each transverse flute.

E. Weld in accordance with AWS D1.1.

F. Mechanically fasten male/female side laps at 18 inches oc maximum.

G. Damaged or bent sections, or sections which do not properly mesh together at the side laps, shall not be used.

H. Seal deck joints, laps, ends, and penetrations with sealant to achieve permanent air seal consistent with air barrier system specified in Section 07900.

I. Reinforce steel deck openings from 6 to 18 inches in size with 2 x 2 x 1/4 inch steel angles. Place framing angles perpendicular to flutes; extend minimum two flutes beyond each side of opening and fusion weld to deck at each flute.

J. Install 6 inch minimum wide sheet steel cover plates, of same thickness as deck, where deck changes direction. Fusion weld 12 inches oc maximum.

K. Install sheet steel closures and angle flashings to close openings between deck and walls, columns, and openings.

L. Install double row of foam flute closures above walls and partitions perpendicular to deck flutes and also include metal closure strips at exterior wall.

M. Position roof sump pans with flange bearing on top surface of deck. Fusion weld at each deck flute.

N. Place metal cant strips in position and fusion weld.

O. Immediately after welding deck and other metal components in position, coat welds, burned areas, and damaged surface coating, with touch-up prime paint.

3.3 TOUCH-UP PAINTING

A. After decking installation, wire brush, clean and paint scarred areas, welds and rust spots on top and bottom surfaces of decking units and supporting steel members.

B. Touch-up galvanized surfaces with galvanizing repair paint applied in accordance with Manufacturer's instructions.

C. Touch-up painted surfaces with same type of shop paint used on adjacent surfaces.

3.4 ACCEPTANCE

Contractor shall notify the structural engineer when steel deck installation is complete to permit observation prior to placement of insulation or roofing substrate.

END OF SECTION

SECTION 05400

COLD-FORMED METAL FRAMING

PART 1 - GENERAL

1.1 SUMMARY

A. Section includes load bearing formed steel stud exterior wall and interior wall framing; and bridging.

B. Related Sections: Drawings and general provisions of the Contract, including General and Supplementary Conditions and Division 1 Specification Sections, apply to this Section.
1. Section 04820 – Reinforced Masonry Assemblies
2. Section 06114 - Wood Blocking and Curbing: Rough wood blocking
3. Section 07213 - Batt Insulation: Insulation within framing members
4. Section 07260 - Vapor Retarders
5. Section 09111 - Non-Load Bearing Metal Framing System
6. Section 09260 - Gypsum Board Assemblies: Light weight, non-load bearing metal stud framing.

1.2 REFERENCES

A. American Iron and Steel Institute:
1. AISI SG-973 - Cold-Formed Steel Design Manual.

B. ASTM International:
1. ASTM A123/A123M - Standard Specification for Zinc (Hot-Dip Galvanized) Coatings on Iron and Steel Products
2. ASTM A653/A653M - Standard Specification for Steel Sheet, Zinc-Coated (Galvanized) or Zinc-Iron Alloy-Coated (Galvannealed) by the Hot-Dip Process
3. ASTM A1008/A1008M - Standard Specification for Steel, Sheet, Cold-Rolled, Carbon, Structural, High-Strength Low-Alloy and High-Strength Low-Alloy with Improved Formability
4. ASTM A1011/A1011M - Standard Specification for Steel, Sheet and Strip, Hot-Rolled, Carbon, Structural, High-Strength Low-Alloy and High-Strength Low-Alloy with Improved Formability
5. ASTM C955 - Standard Specification for Load-Bearing (Transverse and Axial) Steel Studs, Runners (Tracks), and Bracing or Bridging for Screw Application of Gypsum Panel Products and Metal Plaster Bases.

C. American Welding Society:
1. AWS D1.1 - Structural Welding Code - Steel
2. AWS D1.3 - Structural Welding Code - Sheet Steel.

D. National Association of Architectural Metal Manufacturers:

1. NAAMM ML/SFA 540 - Lightweight Steel Framing Systems Manual.

E. SSPC: The Society for Protective Coatings:
1. SSPC Paint 20 - Zinc-Rich Primers (Type I - Inorganic and Type II - Organic).

F. Steel Stud Manufacturers Association:
1. SSMA - Product Technical Information.

1.3 SUBMITTALS

A. Section 01330 - Submittal Procedures: Submittal requirements.

B. Shop Drawings: Show layout, spacings, sizes, thicknesses, and types of cold-formed metal framing; fabrication; and fastening and anchorage details, including mechanical fasteners. Show reinforcing channels, opening framing, supplemental framing, strapping, bracing, bridging, splices, accessories, connection details, and attachment to adjoining work.

C. Product Data: Submit data on standard framing members; describe materials and finish, product criteria, and limitations.

D. Manufacturer's Installation Instructions: Submit special procedures, perimeter conditions and requiring special attention.

E. Mill Certifications: Submit mill certifications for steel delivered to site. Certify steel bare metal thickness in 0.001 inch, yield strength, tensile strength, total elongation in 2 inch or 8 inch gauge length, chemical analysis, and galvanized coating thickness.

F. Qualifications Data: For Installer of products.

1.4 QUALITY ASSURANCE

A. Calculate structural properties of framing members in accordance with AISI SG-973 Specification for Design of Cold-Formed Steel Structural Members.

B. Furnish framing materials in accordance with SSMA - Product Technical Information.

C. Maintain one copy copies on site.

D. Welding: Qualify procedures and personnel according to AWS D1.1/D1.1M, "Structural Welding Code--Steel," and AWS D1.3, "Structural Welding Code--Sheet Steel."

E. AISI Specifications and Standards: Comply with AISI's "North American Specification for the Design of Cold-Formed Steel Structural Members" and its "Standard for Cold-Formed Steel Framing - General Provisions."
1. Comply with AISI's "Standard for Cold-Formed Steel Framing - Header Design."

F. Preinstallation Conference: Conduct conference at Project site to comply with requirements in Division 1 Section "Project Management and Coordination."

1.5 QUALIFICATIONS

A. Manufacturer: Company specializing in manufacturing products specified in this section with minimum three years documented experience.
   1. Current member of Steel Stud Manufacturers Association.

B. Installer: Company specializing in performing Work of this section with minimum three years documented experience.

C. Form, fabricate, provide, and connect components in accordance with NAAMM ML/SFA 540 - Lightweight Steel Framing Systems Manual.

1.6 MOCKUP

A. Section 01400 - Quality Requirements: Mockup requirements.

B. Construct exterior framed wall including corner condition mockup, including insulation, sheathing, door frame, and interior and exterior finish specified in other sections. Coordinate with installation of associated Work of Sections.

C. Locate where directed by Architect/Engineer.

D. Retain accepted mockup as completed Work.

1.7 COORDINATION

A. Section 01300 - Administrative Requirements: Coordination and project conditions.

B. Coordinate placement of components within stud framing system

1.8 DELIVERY, STORAGE, AND HANDLING

A. Protect cold-formed metal framing from corrosion, deformation, and other damage during delivery, storage, and handling.

B. Store cold-formed metal framing, protect with a waterproof covering, and ventilate to avoid condensation.

PART 2 - PRODUCTS

2.1 COLD-FORMED METAL FRAMING

A. Manufacturers:
   1. Clark Steel Framing Systems
   2. Dale / Incor
   3. Dietrich Metal Framing
   4. Steel Construction Systems
   5. Substitutions: Section 01600 - Product Requirements.

2.2 MATERIALS

A. Steel Sheet: ASTM A 1003/A 1003M, Structural Grade, Type H, metallic coated, of grade and coating weight as follows:
   1. Grade: ST50H
   2. Coating: G90.

B. Steel Sheet for Vertical Deflection Clips: ASTM A 653/A 653M, structural steel, zinc coated, of grade and coating as follows:
   1. Grade: 50, Class 1 or 2
   2. Coating: G90.

2.3 EXTERIOR NON-LOAD-BEARING WALL FRAMING

A. Steel Studs: Manufacturer's standard C-shaped steel studs, of web depths indicated, punched, with stiffened flanges, and as follows:
   1. Minimum Base-Metal Thickness: 0.0428 inch
   2. Flange Width: 1-5/8 inches.

B. Steel Track: Manufacturer's standard U-shaped steel track, of web depths indicated, unpunched, with unstiffened flanges, and as follows:
   1. Minimum Base-Metal Thickness: 0.0428 inch or greater than stud thickness where the track is to be installed
   2. Flange Width: 1-1/4 inches.

C. Vertical Deflection Clips: Manufacturer's standard head clips, capable of accommodating upward and downward vertical displacement of primary structure through positive mechanical attachment to stud web.
   1. Slip-Type slotted head track, Deflection Track: Steel sheet top runner manufactured to prevent cracking of finishes applied to interior partition framing resulting from deflection of structure above; in thickness not less than indicated for studs and in width to accommodate depth of studs.
      a. Standard leg 2 ½” with 1 ½” slot

2.4 FRAMING ACCESSORIES

A. Fabricate steel-framing accessories from steel sheet, ASTM A 1003/A 1003M, Structural Grade, Type H, metallic coated, of same grade and coating weight used for framing members.

B. Provide accessories of manufacturer's standard thickness and configuration, unless otherwise indicated, as follows:
   1. Supplementary framing
   2. Bracing, bridging, and solid blocking
   3. Anchor clips
   4. Stud kickers, knee braces, and girts
   5. Hole reinforcing plates
   6. Backer plates.

2.5 ANCHORS, CLIPS, AND FASTENERS

A. Steel Shapes and Clips: ASTM A 36/A 36M, zinc coated by hot-dip process according to ASTM A 123/A 123M.

B. Power-Actuated Anchors: Fastener system of type suitable for application indicated, fabricated from corrosion-resistant materials, with capability to sustain, without failure, a load equal to 10 times design load, as determined by testing per ASTM E 1190 conducted by a qualified independent testing agency.

C. Mechanical Fasteners: ASTM C 1513, corrosion-resistant-coated, self-drilling, self-tapping steel drill screws.
   1. Head Type: Low-profile head beneath sheathing, Manufacturer's standard elsewhere.

D. Welding Electrodes: Comply with AWS standards.

2.6 MISCELLANEOUS MATERIALS

A. Galvanizing Repair Paint: SSPC-Paint 20 or DOD-P-21035.

B. Shims: Load bearing, high-density multimonomer plastic, nonleaching.

C. Sealer Gaskets: Closed-cell neoprene foam, 1/4 inch thick, selected from Manufacturer's standard widths to match width of bottom track or rim track members.

2.7 FABRICATION

A. Fabricate cold-formed metal framing and accessories plumb, square, and true to line, and with connections securely fastened, according to referenced AISI's specifications and standards, Manufacturer's written instructions, and requirements in this Section.
   1. Fabricate framing assemblies using jigs or templates.
   2. Cut framing members by sawing or shearing; do not torch cut.
   3. Fasten cold-formed metal framing members by welding, screw fastening, clinch fastening, or riveting as standard with fabricator. Wire tying of framing members is not permitted.
      a. Comply with AWS D1.3 requirements and procedures for welding, appearance and quality of welds, and methods used in correcting welding work.
      b. Locate mechanical fasteners and install according to Shop Drawings, with screw penetrating joined members by not less than three exposed screw threads.
   4. Fasten other materials to cold-formed metal framing by welding, bolting, or screw fastening, according to Shop Drawings.

B. Reinforce, stiffen, and brace framing assemblies to withstand handling, delivery, and erection stresses. Lift fabricated assemblies to prevent damage or permanent distortion.

C. Fabrication Tolerances: Fabricate assemblies level, plumb, and true to line to a maximum allowable tolerance variation of 1/8 inch in 10 feet and as follows:
   1. Spacing: Space individual framing members no more than plus or minus 1/8 inch from plan location. Cumulative error shall not exceed minimum fastening requirements of sheathing or other finishing materials.
   2. Squareness: Fabricate each cold-formed metal framing assembly to a maximum out-of-square tolerance of 1/8 inch.

PART 3 - EXECUTION

3.1 EXAMINATION

A. Section 01300 - Administrative Requirements: Coordination and project conditions.

B. Verify building framing components are ready to receive Work.

C. Verify rough-in utilities are in proper location.

D. Examine supporting substrates and abutting structural framing for compliance with requirements for installation tolerances and other conditions affecting performance.
   1. Proceed with installation only after unsatisfactory conditions have been corrected.

3.2 INSTALLATION, GENERAL

A. Cold-formed metal framing may be shop or field fabricated for installation, or it may be field assembled.

B. Install cold-formed metal framing according to AISI's "Standard for Cold-Formed Steel Framing - General Provisions" and to Manufacturer's written instructions unless more stringent requirements are indicated.

C. Install shop- or field-fabricated, cold-formed framing and securely anchor to supporting structure.
   1. Screw, bolt, or weld wall panels at horizontal and vertical junctures to produce flush, even, true-to-line joints with maximum variation in plane and true position between fabricated panels not exceeding 1/16 inch.
   2. Provide a sill sealer or gasket barrier between all concrete and steel connections.

D. Install cold-formed metal framing and accessories plumb, square, and true to line, and with connections securely fastened.
   1. Cut framing members by sawing or shearing; do not torch cut.
   2. Fasten cold-formed metal framing members by welding, screw fastening, clinch fastening, or riveting. Wire tying of framing members is not permitted.
      a. Comply with AWS D1.3 requirements and procedures for welding, appearance and quality of welds, and methods used in correcting welding work.

b. Locate mechanical fasteners and install according to Shop Drawings, and complying with requirements for spacing, edge distances, and screw penetration.

E. Install framing members in one-piece lengths unless splice connections are indicated for track or tension members.

F. Construct corners using minimum three studs. Double stud wall openings, door jambs, and window jambs.

G. Install temporary bracing and supports to secure framing and support loads comparable in intensity to those for which structure was designed. Maintain braces and supports in place, undisturbed, until entire integrated supporting structure has been completed and permanent connections to framing are secured.

H. Do not bridge building control joints with cold-formed metal framing. Independently frame both sides of joints.

I. Install insulation, specified in Division 7 Section "Building Insulation," in built-up exterior framing members, such as headers, sills, boxed joists, and multiple studs at openings, that are inaccessible on completion of framing work.

J. Fasten hole reinforcing plate over web penetrations that exceed size of Manufacturer's standard punched openings.

3.3 EXTERIOR NON-LOAD-BEARING WALL INSTALLATION

A. Install continuous tracks sized to match studs. Align tracks accurately and securely anchor to supporting structure as indicated.

B. Fasten both flanges of studs to bottom track, unless otherwise indicated. Space studs as follows:
1. Stud Spacing: 16 inches unless noted otherwise.

C. Set studs plumb, except as needed for diagonal bracing or required for nonplumb walls or warped surfaces and similar requirements.

D. Isolate non-load-bearing steel framing from building structure to prevent transfer of vertical loads while providing lateral support.
1. Connect vertical deflection clips to infill studs and anchor to building structure.

E. Install horizontal bridging in wall studs, spaced in rows indicated on Shop Drawings but not more than 48 inches apart. Fasten at each stud intersection.
1. Bridging: Proprietary bridging bars installed according to Manufacturer's written instructions.

F. Install miscellaneous framing and connections, including stud kickers, web stiffeners, clip angles, continuous angles, anchors, fasteners, and stud girts, to provide a complete and stable wall-framing system.

3.4 ERECTION TOLERANCES

A. Section 01400 - Quality Requirements: Tolerances.

B. Erection Tolerances: Install cold-formed metal framing level, plumb, and true to line to a maximum allowable tolerance variation of 1/8 inch in 10 feet and as follows:

C. Space individual framing members no more than plus or minus 1/8 inch from plan location. Cumulative error shall not exceed minimum fastening requirements of sheathing or other finishing materials.

3.5 REPAIRS AND PROTECTION

A. Galvanizing Repairs: Prepare and repair damaged galvanized coatings on fabricated and installed cold-formed metal framing with galvanized repair paint according to ASTM A 780 and Manufacturer's written instructions.

B. Provide final protection and maintain conditions, in a manner acceptable to Manufacturer and Installer, that ensure that cold-formed metal framing is without damage or deterioration at time of Substantial Completion.

END OF SECTION

SECTION 05500

METAL FABRICATIONS

PART 1 - GENERAL

1.1 SUMMARY

A. Section includes shop fabricated metal items:
1. Loose steel Lintels
2. Steel framing and supports for overhead doors
3. Loose bearing and leveling plates
4. Ledge and shelf angles
5. Steel framing and supports for mechanical and electrical equipment
6. Channel door frames
7. Pipe Bollards
8. Metal floor plates and supports
9. Metal roof walkways
10. Steel weld plates and angles for casting into concrete not specified in other Sections
11. Steel framing and supports for applications where framing and supports are not specified in other Sections.

B. Related Sections:
1. Section 09900 - Paints and Coatings: Field applied paint finish
2. Section 03300 - Cast-In-Place Concrete: Execution requirements for embedded anchors and attachments for metal fabrications specified by this section
3. Section 04810 - Unit Masonry Assemblies: Execution requirements for embedded anchors and attachments for metal fabrications specified by this section in masonry.

1.2 REFERENCES

A. American Architectural Manufacturers Association:
1. AAMA 611 - Voluntary Specification for Anodized Architectural Aluminum.

B. ASTM International:
1. ASTM A36/A36M - Standard Specification for Carbon Structural Steel
2. ASTM A53/A53M - Standard Specification for Pipe, Steel, Black and Hot-Dipped, Zinc-Coated, Welded and Seamless
3. ASTM A123/A123M - Standard Specification for Zinc (Hot-Dip Galvanized) Coatings on Iron and Steel Products
4. ASTM A153/A153M - Standard Specification for Zinc Coating (Hot-Dip) on Iron and Steel Hardware
5. ASTM A283/283M - Standard Specification for Low and Intermediate Tensile Strength Carbon Steel Plates
6. ASTM A500 - Standard Specification for Cold-Formed Welded and Seamless Carbon Steel Structural Tubing in Rounds and Shapes

7. ASTM A501 - Standard Specification for Hot-Formed Welded and Seamless Carbon Steel Structural Tubing.

C. American Welding Society:
1. AWS A2.4 - Standard Symbols for Welding, Brazing, and Nondestructive Examination
2. AWS D1.1 - Structural Welding Code - Steel
3. AWS D1.6 - Structural Welding Code - Stainless Steel.

D. National Ornamental & Miscellaneous Metals Association:
1. NOMMA Guideline 1 - Joint Finishes.

E. SSPC: The Society for Protective Coatings:
1. SSPC - Steel Structures Painting Manual
2. SSPC SP 1 - Solvent Cleaning
3. SSPC Paint 15 - Steel Joist Shop Paint
4. SSPC Paint 20 - Zinc-Rich Primers (Type I - Inorganic and Type II - Organic).

1.3 SUBMITTALS

A. Section 01330 - Submittal Procedures: Submittal requirements.

B. Product Data: For the following:
1. Paint products
2. Grout.

C. Shop Drawings: Indicate profiles, sizes, connection attachments, reinforcing, anchorage, size and type of fasteners, and accessories.
1. Include erection drawings, elevations, and details where applicable. Show anchorage and accessory items. Indicate welded connections using standard AWS A2.0 welding symbols. Indicate net weld lengths.
2. Provide templates for anchors and bolts specified for installation under other Sections.

D. Welders Certificates: Certify welders employed on the Work, verifying AWS qualification within previous 12 months.

1.4 QUALITY ASSURANCE

A. Finish joints in accordance with NOMMA Guideline 1.

B. Perform Work in accordance with governing codes and regulations.

C. Maintain one copy copies of document on site.

1.5 QUALIFICATIONS

A. Installer: Company specializing in performing Work of this section with minimum three years documented experience.

B. Design under direct supervision of Professional Engineer experienced in design of this Work and licensed in State of Texas.

C. Welding: Qualify procedures and personnel according to the following:
   1. AWS D1.1, "Structural Welding Code--Steel"
   2. AWS D1.3, "Structural Welding Code--Sheet Steel."

1.6 DELIVERY, STORAGE, AND HANDLING

A. Section 01600 - Product Requirements: Product storage and handling requirements.

B. Accept metal fabrications on site in labeled shipments. Inspect for damage.

C. Protect metal fabrications from damage by exposure to weather.

1.7 FIELD MEASUREMENTS

A. Field Measurements: Verify actual locations of walls and other construction contiguous with metal fabrications by field measurements before fabrication and indicate measurements on Shop Drawings.
   1. Established Dimensions: Where field measurements cannot be made without delaying the Work, establish dimensions and proceed with fabricating metal fabrications without field measurements. Coordinate wall and other contiguous construction to ensure that actual dimensions correspond to established dimensions.
   2. Provide allowance for trimming and fitting at site.

1.8 COORDINATION

A. Coordinate installation of anchorages for metal fabrications. Furnish setting drawings, templates, and directions for installing anchorages, including sleeves, concrete inserts, anchor bolts, and items with integral anchors, that are to be embedded in concrete or masonry. Deliver such items to Project site in time for installation.

B. Coordinate installation of steel weld plates and angles for casting into concrete that are specified in this Section but required for work of another Section. Deliver such items to Project site in time for installation.

PART 2 - PRODUCTS

2.1 METALS, GENERAL

A. Metal Surfaces, General: Provide materials with smooth, flat surfaces, unless otherwise indicated. For metal fabrications exposed to view in the completed Work, provide materials without seam marks, roller marks, rolled trade names, or blemishes.

2.2 MATERIALS - STEEL

A. Ferrous Materials:
1. Steel Sections: ASTM A36/A36M
2. Steel Tubing: ASTM A500, Grade B or ASTM A501
3. Plates: ASTM A283/A283M
4. Pipe: ASTM A53/A53M, Grade B Schedule.

B. Fasteners: General.

C. Bolts, Nuts, and Washers: A307 galvanized to ASTM A153/A153M for galvanized components.

D. Welding Materials: AWS D1.1; type required for materials being welded.

E. Touch-Up Primer for Galvanized Surfaces: SSPC Paint 20 Type II Organic zinc rich.

2.3 MATERIALS - STAINLESS STEEL

A. Bars and Shapes: ASTM A276; Type 302, 304, or 316

B. Tubing: ASTM A554; Type 316

C. Pipe: ASTM A312/A312M

D. Plate, Sheet and Strip: ASTM A167; Type 316

E. Bolts, Nuts, and Washers: ASTM A354

F. Welding Materials: AWS D1.6; type required for materials being welded.

2.4 LINTELS

A. Fabricate loose steel lintels from steel angles and shapes of size indicated for openings and recesses in masonry walls and partitions at locations indicated. Weld adjoining members together to form a single unit where indicated.

B. Lintels: Steel sections, size and configuration as indicated on Drawings, length to allow 8 inches minimum bearing on both sides of opening.
1. Exterior Locations: Galvanized
2. Interior Locations: Prime paint, one coat.

2.5 LEDGE AND SHELF ANGLES

A. Ledge and Shelf Angles, Channels and Plates Not Attached to Structural Framing: For support of masonry; galvanized.

2.6 DOOR FRAMES

A. Door Frames: Steel channel sections, size indicated on Drawings, with jamb anchors suitable for attachment to steel framing, minimum 4 anchors per jamb; galvanized.

2.7 BOLLARDS

A. Bollards: Steel pipe, concrete filled, crowned cap, 6 inches diameter, length as indicated on Drawings; galvanized, prime paint, one coat.

B. Concrete Fill: 3,000 psi as specified in Section 03300.

C. Anchors: Concealed type.

2.8 STRUCTURAL SUPPORTS

A. Other Structural Supports: Steel sections, shape and size required to support applied loads with maximum deflection of 1/240 of the span; prime paint, one coat.

2.9 ANCHOR BOLTS

A. Anchor Bolts: ASTM A307; 3/4 inch steel bolt, standard J-hook, with nut and washer; unfinished.

B. Anchor Bolts: Metal building anchor bolts by Pre-Engineered Metal Building supplier.

2.10 UNISTRUT METAL ROOFWALK

A. Anti-Skid surfaced grating shall conform to Federal Specification RR-G-1602A.

B. The Grating shall be designed to withstand the following load criteria:
1. Uniform Live Load 500 psf
2. Concentrated Load 1000 lbs.

C. Contractor shall certify that grating has been tested, indicating maximum allowable uniform and concentrated loads, with a factor of safety of 2, per AISC, Section 6.

D. Provide products from the following Manufacturer or an approved equal: Unistrut Corporation (United Interlock Grating)

E. Grating shall be United Interlock Plank Grating System, as manufactured by Unistrut Corporation, 35660 Clinton Street, Wayne, Michigan 48184.

F. Materials shall conform to ASTM A653, Grade A with a Class G-90 coating.

G. Panels will be installed with a leg height of 2-1/2 inches.

H. The surface pattern shall provide a minimum of 35% but not more than 42% open area. Openings shall be a minimum of 4" long and a maximum of 3/4” width.

I. Grating shall be installed as detailed on the approved shop drawings.

J. Grating shall be installed in single, unspliced sections for all requirements to 20' lengths.

K. Grating shall interlock, with male-female legs providing a lock prohibiting horizontal movement. The outside leg of all members shall be male.

L. Connections of grating to support elements shall be by clamping with LM Curbs S-5 Utility clamps.

2.11 FABRICATION

A. Fit and shop assemble items in largest practical sections, for delivery to site.

B. Fabricate items with joints tightly fitted and secured.

C. Continuously seal joined members by continuous welds.

D. Grind exposed joints flush and smooth with adjacent finish surface. Make exposed joints butt tight, flush, and hairline. Ease exposed edges to small uniform radius.

E. Exposed Mechanical Fastenings: Flush countersunk screws or bolts; unobtrusively located; consistent with design of component, except where specifically noted otherwise.

F. Supply components required for anchorage of fabrications. Fabricate anchors and related components of same material and finish as fabrication, except where specifically noted otherwise.

2.12 FACTORY APPLIED FINISHES - STEEL

A. Clean surfaces of rust, scale, grease, and foreign matter prior to finishing.

B. Do not prime surfaces in direct contact with concrete or where field welding is required.

C. Prime paint items with two coats except where galvanizing is specified.

D. Galvanized Structural Steel Members: Galvanize after fabrication to ASTM A123. Furnish minimum 1.25 oz/sq ft galvanized coating.

E. Galvanized Non-structural Items: Galvanized after fabrication to ASTM A123. Furnish minimum 1.25 oz/sq ft galvanized coating.

2.13 FACTORY APPLIED FINISHES - STAINLESS STEEL

A. Satin Polished Finish: Number 4, satin directional polish parallel with long dimension of finished face.

2.14 FACTORY APPLIED FINISHES - ALUMINUM

A. Exterior Aluminum Surfaces: AAMA A41 anodized, prepared with pre-treatment, anodized to clear color.

B. Interior Aluminum Surfaces: AAMA A41 anodized, prepared with pre-treatment, anodized to clear color.

C. Apply one coat coats of bituminous paint to concealed aluminum surfaces in contact with cementitious or dissimilar materials.

2.15 FASTENERS

A. General: Unless otherwise indicated, provide Type 304 or 316 stainless-steel fasteners for exterior use and zinc-plated fasteners with coating complying with ASTM B 633, Class Fe/Zn 5, at exterior walls. Provide stainless-steel fasteners for fastening aluminum. Select fasteners for type, grade, and class required.

B. Steel Bolts and Nuts: Regular hexagon-head bolts, ASTM A 307, Grade A; with hex nuts, ASTM A 563; and, where indicated, flat washers.

C. Stainless-Steel Bolts and Nuts: Regular hexagon-head annealed stainless-steel bolts, nuts and, where indicated, flat washers; ASTM F 593 for bolts and ASTM F 594 for nuts, Alloy Group 1 for type 304 and for type 316.

D. Anchor Bolts: ASTM F 1554, Grade 36.
   1. Provide hot-dip or mechanically deposited, zinc-coated anchor bolts where item being fastened is indicated to be galvanized.

E. Eyebolts: ASTM A 489.

F. Machine Screws: ASME B18.6.3.

G. Lag Bolts: ASME B18.2.1.

H. Wood Screws: Flat head, ASME B18.6.1.

I. Plain Washers: Round, ASME B18.22.1.

J. Lock Washers: Helical, spring type, ASME B18.21.1.

K. Cast-in-Place Anchors in Concrete: Anchors capable of sustaining, without failure, a load equal to four times the load imposed, as determined by testing according to ASTM E 488, conducted by a qualified independent testing agency.
   1. Threaded or wedge type; galvanized ferrous castings, either ASTM A 47/A 47M malleable iron or ASTM A 27/A 27M cast steel. Provide bolts, washers, and shims as needed, hot-dip galvanized per ASTM A 153/A 153M.

L. Expansion Anchors: Anchor bolt and sleeve assembly with capability to sustain, without failure, a load equal to six times the load imposed when installed in unit masonry and four times the load imposed when installed in concrete, as determined by testing according to ASTM E 488, conducted by a qualified independent testing agency.
   1. Material for Anchors in Interior Locations: Carbon-steel components zinc-plated to comply with ASTM B 633, Class Fe/Zn 5.
   2. Material for Anchors in Exterior Locations: Alloy Group 1 for type 304 and for type 316 stainless-steel bolts complying with ASTM F 593 and nuts complying with ASTM F 594.

2.16 MISCELLANEOUS MATERIALS

A. Welding Rods and Bare Electrodes: Select according to AWS specifications for metal alloy welded.

B. Shop Primers: Provide primers that comply with Division 9 painting Sections.

C. Galvanizing Repair Paint: High-zinc-dust-content paint for regalvanizing welds in steel, complying with SSPC-Paint 20.

D. Bituminous Paint: Cold-applied asphalt emulsion complying with ASTM D 1187.

E. Nonshrink, Metallic Grout: Factory-packaged, ferrous-aggregate grout complying with ASTM C 1107, specifically recommended by Manufacturer for heavy-duty loading applications.

F. Nonshrink, Nonmetallic Grout: Factory-packaged, nonstaining, noncorrosive, nongaseous grout complying with ASTM C 1107. Provide grout specifically recommended by Manufacturer for interior and exterior applications.

G. Concrete Materials and Properties: Comply with requirements in Division 3 Section "Cast-in-Place Concrete" for normal-weight, air-entrained, ready-mix concrete with a minimum 28-day compressive strength of 3000 psi , unless otherwise indicated.

2.17 FABRICATION TOLERANCES

A. Squareness: 1/8 inch maximum difference in diagonal measurements.

B. Maximum Offset Between Faces: 1/16 inch.

C. Maximum Misalignment of Adjacent Members: 1/16 inch.

D. Maximum Bow: 1/8 inch in 48 inches.

E. Maximum Deviation From Plane: 1/16 inch in 48 inches.

PART 3 - EXECUTION

3.1 EXAMINATION

A. Section 01300 - Administrative Requirements: Coordination and project conditions.

B. Verify field conditions are acceptable and are ready to receive Work.

3.2 PREPARATION

A. Clean and strip primed steel items to bare metal and aluminum where site welding is required.

B. Supply steel items required to be cast into concrete or embedded in masonry with setting templates to appropriate sections.

3.3 INSTALLATION

A. Install items plumb and level, accurately fitted, free from distortion or defects.

B. Make provisions for erection stresses. Install temporary bracing to maintain alignment, until permanent bracing and attachments are installed.

C. Field weld components indicated on shop drawings.

D. Perform field welding in accordance with AWS D1.1.

E. Obtain approval of Architect/Engineer prior to site cutting or making adjustments not scheduled.

F. After erection, touch up welds, abrasions, and damaged finishes with prime paint or galvanizing repair paint to match shop finishes.

3.4 INSTALLATION, GENERAL

A. Cutting, Fitting, and Placement: Perform cutting, drilling, and fitting required for installing metal fabrications. Set metal fabrications accurately in location, alignment, and elevation; with edges and surfaces level, plumb, true, and free of rack; and measured from established lines and levels.

B. Fit exposed connections accurately together to form hairline joints. Weld connections that are not to be left as exposed joints but cannot be shop welded because of shipping size limitations. Do not weld, cut, or abrade surfaces of exterior units that have been hot-dip galvanized after fabrication and are for bolted or screwed field connections.

C. Field Welding: Comply with the following requirements:
   1. Use materials and methods that minimize distortion and develop strength and corrosion resistance of base metals.
   2. Obtain fusion without undercut or overlap.

3. Remove welding flux immediately.
4. At exposed connections, finish exposed welds and surfaces smooth and blended so no roughness shows after finishing and contour of welded surface matches that of adjacent surface.

D. Fastening to In-Place Construction: Provide anchorage devices and fasteners where metal fabrications are required to be fastened to in-place construction. Provide threaded fasteners for use with concrete and masonry inserts, toggle bolts, through bolts, lag bolts, wood screws, and other connectors.

E. Provide temporary bracing or anchors in formwork for items that are to be built into concrete, masonry, or similar construction.

3.5 INSTALLING MISCELLANEOUS FRAMING AND SUPPORTS

A. General: Install framing and supports to comply with requirements of items being supported, including Manufacturers' written instructions and requirements indicated on Shop Drawings.

3.6 INSTALLING BEARING AND LEVELING PLATES

A. Clean concrete and masonry bearing surfaces of bond-reducing materials, and roughen to improve bond to surfaces. Clean bottom surface of plates.

B. Set bearing and leveling plates on wedges, shims, or leveling nuts. After bearing members have been positioned and plumbed, tighten anchor bolts. Do not remove wedges or shims but, if protruding, cut off flush with edge of bearing plate before packing with grout.
1. Use nonshrink grout, either metallic or nonmetallic, in concealed locations where not exposed to moisture; use nonshrink, nonmetallic grout in exposed locations, unless otherwise indicated.
2. Pack grout solidly between bearing surfaces and plates to ensure that no voids remain.

3.7 INSTALLING METAL BOLLARDS

A. Anchor bollards in place with concrete footings. Center and align bollards in holes 3 inches above bottom of excavation. Place concrete and vibrate or tamp for consolidation. Support and brace bollards in position until concrete has cured.

B. Fill bollards solidly with concrete, mounding top surface to shed water.

3.8 ADJUSTING AND CLEANING

A. Touchup Painting: Immediately after erection, clean field welds, bolted connections, and abraded areas. Paint uncoated and abraded areas with the same material as used for shop painting to comply with SSPC-PA 1 for touching up shop-painted surfaces.
1. Apply by brush or spray to provide a minimum 2.0-mil dry film thickness.

B. Touchup Painting: Cleaning and touchup painting of field welds, bolted connections, and abraded areas of shop paint are specified in Division 9 painting Sections.

C. Galvanized Surfaces: Clean field welds, bolted connections, and abraded areas and repair galvanizing to comply with ASTM A 780.

3.9 ERECTION TOLERANCES

A. Section 01400 - Quality Requirements: Tolerances.

B. Maximum Variation From Plumb: 1/4 inch for every 12 ft in height, non-cumulative.

C. Maximum Offset From Alignment: 1/4 inch.

D. Maximum Out-of-Position: 1/4 inch.

END OF SECTION

SECTION 06114

WOOD BLOCKING AND CURBING

PART 1 - GENERAL

1.1 SUMMARY

A. Section includes blocking in wall openings; wood furring and grounds; telephone and electrical panel back boards; concealed wood blocking for support of toilet and bath accessories, wall cabinets, wood trim; and preservative treatment of wood.

B. Related Sections:
   1. Section 08520: Aluminum Window and Door openings to receive wood blocking
   2. Section 10800: Toilet Accessories

1.2 REFERENCES

A. American National Standards Institute:
   1. ANSI A208.1 - Mat-Formed Wood Particleboard.

B. American Wood-Preservers' Association:
   1. AWPA C1 - All Timber Products - Preservative Treatment by Pressure Process
   2. AWPA C20 - Structural Lumber - Fire-Retardant Treatment by Pressure Processes.

C. National Institute of Standards and Technology:
   1. NIST PS 20 - American Softwood Lumber Standard.

D. Southern Pine Inspection Bureau:
   1. SPIB - Standard Grading Rules for Southern Pine Lumber.

E. West Coast Lumber Inspection Bureau:
   1. WCLIB - Standard Grading Rules for West Coast Lumber.

1.3 SUBMITTALS

A. Section 01330 - Submittal Procedures: Submittal procedures.

B. Manufacturer's Certificate: Certify products meet or exceed specified requirements.

C. Indicate materials and wood species, component profiles, fastening, joining details, finishes and accessories.

D. Research/Evaluation reports: for the following, showing compliance with building code in effect for the Project Site:
   1. Preservative-treated wood
   2. Power-Driven fasteners

3. Powder-Actuated fasteners
4. Expansion anchors.

E. Product Data: Submit technical data on wood preservative and fire retardant treatment materials and application instructions.
1. Include data for wood-preservative treatment from chemical treatment Manufacturer and certification by treating plant that treated materials comply with requirements. Indicate type of preservative used and net amount of preservative retained.
2. For products receiving a waterborne treatment, include statement that moisture content of treated materials was reduced to levels specified before shipment to Project Site.
3. Include copies of warranties from chemical treatment Manufacturers for each type of treatment.

1.4 QUALITY ASSURANCE

A. Perform Work in accordance with the following:
1. Lumber Grading Agency: Certified by NIST PS 20
2. Plywood Grading Agency: Certified by APA/EWA.

B. Rough Carpentry Lumber: Douglas fir or yellow pine meeting the national grading rule for dimension lumber and the design values as determined in accordance with ASTM D245. All lumber shall bear a grade mark stamp of either the West Coast Lumber Inspection Bureau or Southern Pine Inspection Bureau.

1.5 DELIVERY, STORAGE, AND HANDLING

A. Section 01600 - Product Requirements: Product storage and handling requirements.

B. Stack lumber flat with spacers between each bundle to provide air circulation. Provide for air circulation around stacks and under coverings.

C. Do not deliver shop fabricated carpentry items until site conditions are adequate to receive the work. Protect items from weather while in transit.

D. Store indoors, in ventilated areas with a constant minimum temperature of 60 degrees F. maximum relative humidity of 25 to 55 percent.

E. Protect work from moisture damage.

PART 2 - PRODUCTS

2.1 MATERIALS

A. Lumber Grading Rules: SPIB.
1. Factory mark each piece of lumber with grade stamp of grading agency.

B. Miscellaneous Framing: Stress Group, Southern Pine species, No. 1 grade, 15 percent maximum moisture content, pressure preservation treatment.

C. Miscellaneous Blocking: Stress Group, Southern Pine species, No. 2 grade, 15 percent maximum moisture content, pressure preservation treatment.

D. For blocking and nailers used for attachment of other construction, select and cut lumber to eliminate knots and other defects that will interfere with attachment of other work.

E. Plywood: APA/EWA Rated Sheathing Structural I, Grade B-C; Exposure Durability 1.

F. Plywood: APA/EWA Rated Sheathing Structural I, Grade C-D; Exposure Durability 1; unsanded.

2.2 ACCESSORIES

A. Fasteners and Anchors:
1. Fasteners: Hot dipped galvanized steel for exterior, high humidity and treated wood locations, unfinished steel elsewhere: size and type to suit application.
2. Anchors: Toggle bolt type for anchorage to hollow masonry. Expansion shield and lag bolt type for anchorage to solid masonry or concrete. Bolt or ballistic fastener for anchorages to steel.

B. Nails, Brads, and Staples: ASTM F 1667.

C. Power-Driven Fasteners: NES NER-272.

D. Wood Screws: ASME B18.6.1.

E. Screws for Fastening to Cold-Formed Metal Framing: ASTM C 954, except with wafer heads and reamer wings, length as recommended by screw Manufacturer for material being fastened.

F. Lag Bolts: ASME B18.2.1.

G. Bolts: Steel bolts complying with ASTM A 307, Grade A; with ASTM A 563 hex nuts and, where indicated, flat washers. Expansion Anchors: Anchor bolt and sleeve assembly of material indicated below with capability to sustain, without failure, a load equal to 6 times the load imposed when installed in unit masonry assemblies and equal to 4 times the load imposed when installed in concrete as determined by testing per ASTM E 488 conducted by a qualified independent testing and inspecting agency.
1. Material: Stainless steel with bolts and nuts complying with ASTM F 593 and ASTM F 594, Alloy Group 1 or 2.

2.3 FACTORY WOOD TREATMENT

A. Wood Preservative (Pressure Treatment): AWPA C1 using water borne preservative ACQ (Alkaline Copper Quaternary compound) with 0.25 lbs. retention/cubic foot. Each

piece shall be Grade marked and shall show the retention, or the Contractor shall furnish a commercial laboratory inspection.

B. Fire Retardant Treatment: Pressure treatment, AWPA C20 for lumber and AWPA C27 for plywood, Interior Type, chemically treated and pressure impregnated; capable of providing a maximum flame spread/smoke development rating of 25/450. Each piece shall be Grade marked and shall show the retention, or the Contractor shall furnish a commercial laboratory inspection.

PART 3 - EXECUTION

3.1 EXAMINATION

A. Section 01300 - Administrative Requirements: Verification of existing conditions before starting work.

B. Verify substrate conditions are ready to receive blocking, curbing and framing.

3.2 PREPARATION

A. Coordinate placement of blocking, curbing and framing items.

3.3 INSTALLATION

A. Set members level and plumb, in correct position. Install where required for attaching other work, coordinate locations with other work involved.

B. Attach items to substrates to support applied loading. Recess bolts and nuts flush with surfaces, unless noted otherwise.

C. Place horizontal members, crown side up.

D. Construct members of continuous pieces of longest possible lengths.

E. Construct curb members of solid wood sections.

F. Curb roof openings except where prefabricated curbs are provided. Form corners by alternating lapping side members.

G. Space framing and furring 16 inches o.c. or as noted

H. Secure sheathing to framing members with ends over firm bearing and staggered.

I. Install telephone and electrical panel back boards with plywood sheathing material where required. Size back boards 12 inches beyond size of electrical and telephone panel.

3.4 SITE APPLIED WOOD TREATMENT

A. Apply preservative treatment.

B. Brush apply two coats of preservative treatment on wood in contact with cementitious materials, roofing and related metal flashings. Treat site-sawn cuts.

C. Allow preservative to dry prior to erecting members.

3.5 SCHEDULES

A. Blocking: S/P/F species, 15 percent maximum moisture content, pressure preservative treatment, Fire Retardant Treatment.

B. Telephone and Electrical Panel Boards: 3/4 inch thick, square edges, site brush applied preservative treated.

C. Toilet Rooms: S/P/F species, 15 percent maximum moisture content, pressure preservative treatment, Fire Retardant Treatment

END OF SECTION

SECTION 06200

FINISH CARPENTRY

PART 1 - GENERAL

1.1 SUMMARY

A. Section includes finish carpentry items; wood casings and moldings.

B. Related Sections:
1. Section 06114 - Wood Blocking and Curbing: Grounds and support framing
2. Section 06410 - Custom Cabinets: Shop fabricated custom cabinet work
3. Section 09900 - Paints and Coatings: Painting and finishing of finish carpentry items.

1.2 REFERENCES

A. American National Standards Institute:
1. ANSI A135.4 - Basic Hardboard
2. ANSI A156.9 - Cabinet Hardware
3. ANSI A208.1 - Mat-Formed Wood Particleboard.

B. APA-The Engineered Wood Association:
1. APA/EWA PS 1 - Voluntary Product Standard for Construction and Industrial Plywood.

C. Architectural Woodwork Institute:
1. AWI - Quality Standards Illustrated.

D. American Wood-Preservers' Association:
1. AWPA C1 - All Timber Products - Preservative Treatment by Pressure Process.

E. Hardwood Plywood and Veneer Association:
1. HPVA HP-1 - American National Standard for Hardwood and Decorative Plywood.

F. National Institute of Standards and Technology:
1. NIST PS 20 - American Softwood Lumber Standard.

1.3 SUBMITTALS

A. Section 01330 - Submittal Procedures: Submittal procedures.

B. Shop Drawings: Indicate materials, component profiles, fastening methods, jointing details, and accessories, to minimum scale of 1-1/2 inch to 1 ft.
1. Show locations and sizes of furring, blocking, and hanging strips, including concealed blocking and reinforcement specified in other Sections.

2. Show locations and sizes of cutouts and holes for plumbing fixtures, faucets, soap dispensers, and other items installed in architectural woodwork.

C. Product Data:
1. Submit data on fire retardant treatment materials and application instructions.
2. Product Certificates: For each type of product, signed by product Mnufacturer.
3. Woodwork Quality Standard Compliance Certificates: AWI Quality Certification Program certificates.
4. Qualification Data: For Installer.

D. Samples:
1. Submit two samples of finish plywood, 8 x 10 inch in size illustrating wood grain and specified finish.
2. Submit two samples of wood trim 10 inch long.

E. Certification: Submit copy of fabricator's authorization to use AWI Grade Stamps or AWI Quality Certification Program license and Project specific letters.

1.4 QUALITY ASSURANCE

A. Perform work in accordance with AWI (Architectural Woodwork Institute) Architectural Woodwork Quality Standards Illustrated, Custom Grade.

B. Maintain one copy of each document on site.

1.5 QUALIFICATIONS

A. Fabricator: Company specializing in fabricating Products specified in this section with minimum three years documented experience.

B. Installer Qualifications: Certified participant in AWI's Quality Certification Program.

C. Source Limitations: Engage a qualified woodworking firm to assume undivided responsibility for production of interior architectural woodwork.

D. Quality Standard: Unless otherwise indicated, comply with AWI's "Architectural Woodwork Quality Standards" for grades of interior architectural woodwork indicated for construction, finishes, installation, and other requirements.
1. Provide AWI Quality Certification Program labels and certificates indicating that woodwork complies with requirements of grades specified.

1.6 MOCKUP

A. Section 01400 - Quality Requirements: Mockup requirements.

B. Construct mockups, full size including window sill and door casing.

C. Locate where directed by Architect/Engineer.

D. Incorporate accepted mockup as part of Work if undisturbed at time of Substantial Completion.

1.7 PRE-INSTALLATION MEETINGS

A. Section 01300 - Administrative Requirements: Pre-installation meeting.

B. Convene minimum two weeks prior to commencing work of this section.

1.8 DELIVERY, STORAGE, AND HANDLING

A. Section 01600 - Product Requirements: Product storage and handling requirements.

B. Do not deliver woodwork until painting and similar operations that could damage woodwork have been completed in installation areas. If woodwork must be stored in other than installation areas, store only in areas where environmental conditions are controlled.

C. Environmental Limitations: Do not deliver or install woodwork until building is enclosed, wet work is complete, and HVAC system is operating and maintaining temperature and relative humidity at occupancy levels during the remainder of the construction period.

D. Protect work from moisture damage.

1.9 FIELD MEASUREMENTS

A. Verify field measurements prior to fabrication.

B. Field Measurements: Where woodwork is indicated to fit to other construction, verify dimensions of other construction by field measurements before fabrication, and indicate measurements on Shop Drawings. Coordinate fabrication schedule with construction progress to avoid delaying the Work.
   1. Locate concealed framing, blocking, and reinforcements that support woodwork by field measurements before being enclosed, and indicate measurements on Shop Drawings.
   2. Established Dimensions: Where field measurements cannot be made without delaying the Work, establish dimensions and proceed with fabricating woodwork without field measurements. Provide allowance for trimming at site, and coordinate construction to ensure that actual dimensions correspond to established dimensions

1.10 SEQUENCING

A. Sequence work to ensure utility connections are achieved in orderly and expeditious manner.

1.11 COORDINATION

A. Section 01300 - Administrative Requirements: Coordination and project conditions.

B. Coordinate sizes and locations of framing, blocking, furring, reinforcements, and other related units of Work specified in other Sections to ensure that interior architectural woodwork can be supported and installed as indicated.

PART 2 - PRODUCTS

2.1 FINISH CARPENTRY

A. General: Provide materials that comply with requirements of AWI's quality standard for each type of woodwork and quality grade specified, unless otherwise indicated

2.2 COMPONENTS

A. Hardwood Lumber: AWI Grade Custom Grade; maximum moisture content of 6-8 percent; and the following:
   1. Species of Wood: Red Oak
   2. Cut or Slicing of Wood: Plain or Flat Sawn

2.3 ACCESSORIES

A. Fasteners: Of size and type to suit application.

B. Concealed Joint Fasteners: Threaded steel.

C. Lumber for Shimming, Blocking, and Hanging strips: Softwood lumber: Stress Group, Southern Pine species, No. 2 grade, 15 percent maximum moisture content, pressure preservation treatment species.

D. Wood Filler: Solvent base, tinted to match surface finish color.

E. Wood Treatment:
   1. Fire Retardant (FR-S Type): Chemically treated and pressure impregnated; capable of providing maximum flame spread/smoke development rating of 25 / 450 in accordance with ASTM E84
   2. Shop pressure treat treatment to wood materials requiring fire rating preservatives to concealed wood blocking.
   3. Provide identification on fire retardant treated material.
   4. Deliver fire retardant treated materials cut to required sizes. Minimize field cutting.
   5. Redry or Kiln dry wood after pressure treatment to maximum 6-8 percent moisture content.

2.4 FABRICATION

A. Fabricate to AWI Custom standards.

B. Shop assemble work for delivery to site, permitting passage through building openings.

C. Shop prepare and identify components for grain matching during site erection.

D. Backout or groove backs of flat trim members and kerf backs of other wide, flat members, except for members with ends exposed in finished work.

E. Assemble casings in plant except where limitations of access to place of installation require field assembly

F. Assemble moldings in plant to maximum extent possible. Miter corners in plant and prepare for field assembly with bolted fittings designed to pull connections together.

G. When necessary to cut and fit on site, fabricate materials with ample allowance for cutting. Furnish trim for scribing and site cutting.

2.5 FINISHING

A. Sand work smooth and set exposed nails and screws.

B. Apply wood filler in exposed nail and screw indentations.

C. On items to receive transparent finishes, use wood filler matching surrounding surfaces and of types recommended for applied finishes.

D. Stain, seal, and varnish exposed to view surfaces, per specifications section 09900, Paintings and Coatings. All finished natural woods to match.

E. Seal internal surfaces and semi-concealed surfaces.

F. Seal surfaces in contact with cementitious materials.

PART 3 - EXECUTION

3.1 EXAMINATION

A. Section 01300 - Administrative Requirements: Coordination and project conditions.

B. Verify adequacy of backing and support framing.

C. Verify mechanical, electrical, and building items affecting work of this section are placed and ready to receive this work.

D. Before installation, condition woodwork to average prevailing humidity conditions in installation areas.

E. Before installing architectural woodwork, examine shop-fabricated work for completion and complete work as required, including removal of packing and backpriming.

3.2 INSTALLATION

A. Install work in accordance with AWI Custom quality standard.

B. Set and secure materials and components in place, plumb and level.

C. Carefully scribe work abutting other components, with maximum gaps of 1/32 inch. Do not use additional overlay trim to conceal larger gaps.

D. Site Applied Wood Treatment:
1. Apply preservative treatment.
2. Brush apply two coats of preservative treatment on wood in contact with cementitious materials.
3. Treat site-sawn cuts.
4. Allow preservative to dry prior to erecting members.

E. Preparation For Site Finishing:
1. Set exposed fasteners. Apply wood filler in exposed fastener indentations. Sand work smooth.
2. Site Finishing: Refer to Section 09900, Paints and Coatings
3. Before installation, prime paint surfaces of items or assemblies to be in contact with cementitious materials.

F. Anchor woodwork to anchors or blocking built in or directly attached to substrates. Secure with countersunk, concealed fasteners and blind nailing as required for complete installation. Use fine finishing nails or finishing screws for exposed fastening, countersunk and filled flush with woodwork and matching final finish if transparent finish is indicated.

G. Standing and Running Trim: Install with minimum number of joints possible, using full-length pieces (from maximum length of lumber available) to greatest extent possible. Do not use pieces less than 96 inches long, except where shorter single-length pieces are necessary. Scarf running joints and stagger in adjacent and related members.
1. Fill gaps, if any, between top of base and wall with plastic wood filler, sand smooth, and finish same as wood base if finished.
2. Install standing and running trim with no more variation from a straight line than 1/8 inch in 96 inches.

3.3 ERECTION TOLERANCES

A. Section 01400 - Quality Requirements: Tolerances.

B. Maximum Variation from Indicated Position: 1/16 inch.

C. Maximum Offset from Alignment with Abutting Materials: 1/32 inch.

D. Repair damaged and defective woodwork, where possible, to eliminate functional and visual defects; where not possible to repair, replace woodwork. Adjust joinery for uniform appearance.

3.4 SCHEDULES

A. Interior:
1. Window Sills: Clear Red Oak; prepare for transparent finish.
2. Casings and Miscellaneous Trim: Clear Red Oak; prepare for transparent finish.

END OF SECTION

SECTION 06410

CUSTOM CABINETS

PART 1 - GENERAL

1.1 SUMMARY

A. Section includes custom-fabricated cabinet units; counter tops; cabinet hardware; preparation for installing utilities in cabinets; and shop and / or site finishing.

B. Related Sections:
   1. Section 06114 - Wood Blocking and Curbing: Grounds and support framing
   2. Section 09900 - Paints and Coatings: Site finishing of cabinet exterior and interior.

1.2 REFERENCES

A. American National Standards Institute:
   1. ANSI A156.9 - Cabinet Hardware
   2. ANSI A208.1 - Mat-Formed Wood Particleboard.

B. Architectural Woodwork Institute:
   1. AWI - Quality Standards Illustrated.

C. Federal Specification Unit:
   1. FS A-A-1936 - Adhesive, Contact, Neoprene Rubber.

D. National Electrical Manufacturers Association:
   1. NEMA LD 3 - High Pressure Decorative Laminates.

E. Woodwork Institute of California:
   1. WIC - Manual of Millwork.

1.3 SUBMITTALS

A. Section 01330 - Submittal Procedures: Submittal procedures.

B. Product Data: For panel products, high-pressure decorative laminate, adhesive for bonding plastic laminate, cabinet hardware and accessories.

C. Shop Drawings: Indicate materials, component profiles and elevations, assembly methods, joint details, fastening methods, accessory listings, hardware location and schedule of finishes.
   1. Show details full size.
   2. Show locations and sizes of furring, blocking, and hanging strips, including concealed blocking and reinforcement specified in other Sections.

3. Show locations and sizes of cutouts and holes for plumbing fixtures, faucets, soap dispensers, and other items installed in architectural woodwork.

D. Product Data: Submit data for hardware accessories.

E. Samples for Initial Selection:
1. Plastic laminates.

F. Samples for Verification:
1. Lumber with or for transparent finish, not less than 50 sq. in., for each species and cut, finished on 1 side and 1 edge.
2. Submit two, 8 x 10 inch size samples, illustrating cabinet finish.
3. Submit two, 8 x 10 inch size samples, illustrating counter top finish.
4. Submit one sample of drawer pulls and hinges, illustrating hardware finish.

G. Certification: Submit copy of fabricator's authorization to use AWI Grade Stamps. AWI Quality Certification Program license and Project specific letters.

H. Product Certificates: For each type of product, signed by product Manufacturer.

I. Qualification Data: For Installer.

1.4 QUALITY ASSURANCE

A. Perform work in accordance with AWI (Architectural Woodwork Institute) Architectural Woodwork Quality Standards Illustrated, Custom Grade.

B. Source Limitations: Engage a qualified woodworking firm to assume undivided responsibility for production of interior architectural woodwork.

C. Installer Qualifications: Certified participant in AWI's Quality Certification Program.

D. Quality Standard: Unless otherwise indicated, comply with AWI's "Architectural Woodwork Quality Standards" for grades of interior architectural woodwork indicated for construction, finishes, installation, and other requirements.
1. Provide AWI Quality Certification Program labels and certificates indicating that woodwork complies with requirements of grades specified.

E. Maintain one copy of each document on site.

1.5 QUALIFICATIONS

A. Fabricator: Company specializing in performing Work of this section with minimum three years documented experience.

B. Fabricator: Authorized to use AWI Grade Stamps

1.6 MOCKUP

A. Section 01400 - Quality Requirements: Mockup requirements.

B. Construct mockup of full size base cabinet including plumbing fixtures, hardware, accessories, and fitments.

C. Locate where directed by Architect/Engineer.

D. Incorporate accepted mockup as part of Work.

1.7 PRE-INSTALLATION MEETINGS

A. Section 01300 - Administrative Requirements: Pre-installation meeting.

B. Convene minimum two weeks prior to commencing work of this section.

1.8 DELIVERY, STORAGE, AND HANDLING

A. Section 01600 - Product Requirements: Product storage and handling requirements.

B. Protect units from moisture damage.

1.9 ENVIRONMENTAL REQUIREMENTS

A. Section 01600 - Product Requirements.

B. During and after installation of Work of this section, maintain same temperature and humidity conditions in building spaces as will occur after occupancy.

1.10 FIELD MEASUREMENTS

A. Verify field measurements prior to fabrication.

PART 2 - PRODUCTS

2.1 CUSTOM CABINETS

A. Fabricators:
   1. Fieldstone Cabinetry, Inc. Model Hudson, Brighton or Farmington.
   2. Legacy Cabinets, Inc. Model The Select Series, Plantation Natural Square
   3. Substitutions: Section 01600 - Product Requirements.

2.2 COMPONENTS

A. Hardwood Lumber: AWI Grade Custom; maximum moisture content of 6-8 percent; and the following:
   1. Species of Wood: Red Oak

2. Cut or Slicing of Wood: Plain, Flat Sawn or Quarter Sawn
3. Matching of Individual Leaves to Each Other: slip matching.

B. Hardwood Plywood: AWI Grade A veneer with medium density fiberboard core; low VOC type of glue recommended for application; formaldehyde-free binders and the following:
1. Species of Veneer: Red Oak
2. Cut or Slicing of Veneer: Plain, Flat Sawn or Quarter Sawn
3. Matching of Individual Leaves to Each Other: slip random matching
4. Matching Across the Panel Face: balanced matching
5. Matching or Relationship of Panels to Each Other: premanufactured sets.

C. Particleboard: ANSI A208.1 Type 1; ¾" thick composed of Woodstalk Agrifiber Core medium density, made with water resistant adhesive; sanded faces. End panels, Bottoms, Rails, Shelves, Doors and Bases; formaldehyde-free binders

D. Drawer Sides and Backs: Solid-hardwood lumber.

E. Drawer Bottoms: Hardwood plywood.

F. Hardboard with Melamine backer. 7/32" Backs.

G. High Pressure Decorative Laminate: NEMA LD 3, GP50 for horizontal surfaces, GP28 for vertical surfaces, CL20 for cabinet liner surfaces, BK20 for undecorated backing sheets, FR50 for fire-retardant surfaces; through color, pattern, and surface texture as selected by Architect from full range Manufacturers standards.
1. Manufacturer: Subject to compliance with requirements, provide high-pressure decorative laminates by one of the following or approved equivalent:
a. Nevamar Company, LLC; Decorative Products Div.
b. Panolam Industries International Incorporated.
c. Wilsonart International; Div. of Premark International, Inc.

2.3 ACCESSORIES

A. Adhesive for High Pressure Decorative Laminates: Type recommended by laminate Manufacturer to suit application, formaldehyde free adhesive, low voc.

B. Veneer Edge Band: Standard wood veneer edge band matching face veneer. Conceal edge grain of exposed and semi-exposed plywood and particle board with hardwood edge bands.

C. Fasteners: Size and type to suit application.

D. Bolts, Nuts, Washers, Lags, Pins, and Screws: Of size and type to suit application; brass finish in concealed locations and brass finish in exposed locations.

E. Concealed Joint Fasteners: Threaded steel.

F. Shelf Standards and Rests: Formed steel channels and rests, cut for fitted rests spaced at ½ inch centers; satin finish.

G. Drawer and Door Pulls: Extruded aluminum pull, "U" shaped pull, aluminum with satin finish, 4 inch centers. Stanley Hardware #348311, Satin Aluminum.

H. Catches: Adjustable Magnetic. Stanley Hardware #810160 Clear coated aluminum.

I. Drawer Slides: Galvanized steel construction, ball bearings separating tracks, full extension type. Blum Standard drawer runner 430E full extension.

J. Hinges: Concealed hinges type, steel with satin finish. 3-dimensional door adjustment. Blum Modul hinge, screw on.

2.4 FABRICATION

A. Shop assemble casework for delivery to site in units easily handled and to permit passage through building openings.

B. Fit shelves, doors, and exposed edges with matching veneer edging. Use one piece for full length only.

C. Cap exposed high pressure decorative laminate finish edges with material of same finish and pattern.

D. Door and Drawer Fronts: 3/4 inch thick; partial overlay style.

E. When necessary to cut and fit on site, fabricate materials with ample allowance for cutting. Furnish trim for scribing and site cutting.

F. Apply high pressure decorative laminate finish in full uninterrupted sheets consistent with manufactured sizes. Fit corners and joints hairline; secure with concealed fasteners. Locate counter butt joints minimum 2 feet from sink cut-outs.

G. Apply laminate backing sheet to reverse side of plastic laminate finished surfaces.

H. Fabricate cabinets and counter tops with cutouts for plumbing fixtures, inserts, outlet boxes, fixtures and fittings. Verify locations of cutouts from on-site dimensions. Seal cut edges.

2.5 SHOP FINISHING

A. Sand work smooth and set exposed nails and screws.

B. Apply wood filler in exposed nail and screw indentations.

C. On items to receive transparent finishes, use wood filler matching surrounding surfaces and of types recommended for applied finishes.

D. Finish work in accordance with AWI - Section 1500 Finish System Transparent TR-6 or TR-7.

E. Stain, seal and varnish exposed to view surfaces.

F. Seal, stain, and varnish internal surfaces of cabinets and semi-concealed surfaces.

G. Seal surfaces in contact with cementitious materials.

H. Finish in accordance with Section 09900.

PART 3 - EXECUTION

3.1 EXAMINATION

A. Section 01300 - Administrative Requirements: Coordination and project conditions.

B. Verify adequacy of backing and support framing.

C. Verify location and sizes of utility rough-in associated with work of this section.

3.2 INSTALLATION

A. Set and secure casework in place; rigid, plumb, and level.

B. Use fixture attachments in concealed locations for wall mounted components.

C. Use concealed joint fasteners to align and secure adjoining cabinet units and counter tops.

D. Carefully scribe casework abutting other components, with maximum gaps of 1/32 inch. Do not use additional overlay trim for this purpose.

E. Secure cabinet and counter bases to floor using appropriate angles and anchorages.

F. Countersink anchorage devices at exposed locations. Conceal with solid wood plugs of species to match surrounding wood; finish flush with surrounding surfaces.

3.3 ADJUSTING

A. Section 01700 - Execution Requirements: Testing, adjusting and balancing.

B. Adjust moving or operating parts to function smoothly and correctly.

3.4 CLEANING

A. Section 01700 - Execution Requirements: Final cleaning.

B. Clean casework, counters, shelves, hardware, fittings, and fixtures.

3.5 SCHEDULES

A. Meeting Room: Base and upper units wood or high pressure decorative laminate, high pressure decorative laminate counter top, exposed wood finish AWI TR-6 or TR-7.

B. Corridor: Base and upper units wood or high pressure decorative laminate, high pressure decorative laminate counter top, exposed wood finish AWI TR-6 or TR-7.

C. Toilet Rooms: High pressure decorative laminate counter top

END OF SECTION

SECTION 07190

WATER REPELLENTS

PART 1 - GENERAL

1.1 SUMMARY

A. Section includes water repellent coating applied to exterior and interior clay brick, concrete masonry, and concrete surfaces.

B. Related Sections:
1. Section 03300-Cast-In-Place Concrete: Concrete surfaces
2. Section 07900 - Joint Sealers.

1.2 REFERENCES

A. ASTM International:
1. ASTM D1653 - Standard Test Method for Water Vapor Transmission of Organic Coating Films
2. ASTM G154 - Standard Practice for Operating Fluorescent Light Apparatus for UV Exposure of Nonmetallic Materials.

1.3 SYSTEM DESCRIPTION

A. Applied Penetrant: Material to restrict moisture absorption in material being treated as recommended by Manufacturer for specific substrate.

B. Performance Requirements:
1. Reduce absorption of water and waterborne contaminants into substrate.
2. Permit water vapor transmittance.
3. No change to slight darkening of substrate after application.

1.4 SUBMITTALS

A. Section 01330 - Submittal Procedures: Submittal procedures.

B. Product Data: Submit details of product description, tests performed, limitations to coating, and chemical properties including percentage of solids.

C. Manufacturer's Installation Instructions: Submit special procedures and conditions requiring special attention, and cautionary procedures required during application.

D. Manufacturer's Certificate: Certify products meet or exceed specified requirements.

1.5 QUALIFICATIONS

A. Manufacturer: Company specializing in manufacturing products specified in this section with minimum three years documented experience.

B. Applicator: Company specializing in performing Work of this section with minimum three years documented experience.

1.6 PRE-INSTALLATION MEETINGS

A. Section 01300 - Administrative Requirements: Pre-installation meeting.

B. Convene minimum two weeks prior to commencing work of this section.

1.7 DELIVERY, STORAGE, AND HANDLING

A. Section 01600 - Product Requirements: Product storage and handling requirements.

B. Protect coating liquid from freezing.

1.8 ENVIRONMENTAL REQUIREMENTS

A. Section 01600 - Product Requirements.

B. Do not apply coating when wind velocity exceeds manufacturer recommendations.

C. Environmental Requirements:
   1. Ambient and surface temperatures between 50 and 100 degrees F (4 and 38 degrees C).
   2. Do not apply if rain or temperatures below 50 degrees F (4 degrees C) are expected within 6 hours after application.
   3. Do not apply during winds that could carry water repellent to adjacent surfaces, properties, or vegetation.
   4. Do not apply sooner than 24 hours after surface has been exposed to rain or other water source.

D. Substrate:
   1. Cured minimum 30 days
   2. Not frozen or frost covered
   3. Clean, sound, and dry.

E. Ensure adequate ventilation in application areas.

F. Joint sealers, paints, and glazing compounds and sealants fully cured.

1.9 WARRANTY

A. Section 01700 - Execution Requirements: Product warranties and product bonds.

B. Furnish five year Manufacturer warranty for water repellents.

PART 2 - PRODUCTS

2.1 WATER REPELLENTS

A. Manufacturers:
1. Euclid Chemical Company
2. Pecora Corporation
3. ProSoCo
4. Sonneborn Building Products
5. Substitutions: Section 01600 - Product Requirements.

2.2 COMPONENTS

A. Siloxane Water Repellent: Siloxane penetrating type water repellent, with maximum 175 g/L VOC content.
1. Moisture Vapor Transmission: Maximum 28.33 perms or 50% compared to untreated surfaces, ASTM D1653.
2. Resistance to Accelerated Weathering: No loss in repellency after 2,500 hours, ASTM G154.
3. Reduction of Leakage: Minimum 97 percent water penetration and leakage, ASTM E514.
4. Apply to clay brick, concrete masonry, concrete, and stucco.

B. Silane Water Repellent: Silane penetrating type water repellent, with maximum 175 g/L VOC content.
1. Moisture Vapor Transmission: Maximum 28.33 perms or 50% compared to untreated surfaces, ASTM D1653.
2. Resistance to Accelerated Weathering: No loss in repellency after 2,500 hours, ASTM G154.
3. Reduction of Leakage: Minimum 97 percent water penetration and leakage, ASTM E514.
4. Apply to clay brick, concrete masonry, concrete, and stucco.

PART 3 - EXECUTION

3.1 EXAMINATION

A. Section 01300 - Administrative Requirements: Coordination and project conditions.

B. Verify surfaces to be coated are dry, clean, and free of efflorescence, oil, or other matter detrimental to application of coating.

3.2 PREPARATION

A. Delay Work until concrete substrate is cured minimum of 60 days.

B. Remove loose particles and foreign matter.

C. Remove oil or foreign substance with chemical solvent which will not effect coating.

D. Scrub and rinse surfaces with water and let dry.

3.3 APPLICATION

A. Apply at rate of per Manufacturers coverage rates and by recommend application equipment.

B. Apply in two continuous, uniform coats.

3.4 PROTECTION OF INSTALLED CONSTRUCTION

A. Section 01700 - Execution Requirements: Protecting installed construction.

B. Protect adjacent surfaces not scheduled to receive coating.

C. Protect landscaping, property and vehicles.

D. When applied to unscheduled surfaces, remove immediately by methods as instructed by coating Manufacturer.

3.5 SCHEDULES

A. Concrete floors: Two coat application, clear.

END OF SECTION

SECTION 07212

ROOF BOARD INSULATION

PART 1 - GENERAL

1.1 SUMMARY

A. Section includes rigid board insulation and integral vapor retarder at roof.

B. Related Sections:
1. Section 07260 - Vapor Retarders: Vapor retarder materials to adjacent insulation
2. Section 07213 - Batt Insulation
3. Section 13120 – Pre-Engineered Buildings

1.2 REFERENCES

A. ASTM International:
1. ASTM C578 - Standard Specification for Rigid, Cellular Polystyrene Thermal Insulation
2. ASTM C1289 - Standard Specification for Faced Rigid Cellular Thermal Insulation Board
3. ASTM D2842 - Standard Test Method for Water Absorption of Rigid Cellular Plastics
4. ASTM E84 - Standard Test Method for Surface Burning Characteristics of Building Materials
5. ASTM E96 - Standard Test Methods for Water Vapor Transmission of Materials.

B. National Fire Protection Association:
1. NFPA 255 - Standard Method of Test of Surface Burning Characteristics of Building Materials.

C. Underwriters Laboratories Inc.:
1. UL 723 - Tests for Surface Burning Characteristics of Building Materials.

1.3 SYSTEM DESCRIPTION

A. Materials of This Section: Provide thermal protection to vapor retarder in conjunction with vapor retarder materials in Section 07260.

1.4 SUBMITTALS

A. Section 01330 - Submittal Procedures: Submittal procedures.

B. Product Data: Submit data on product characteristics, performance criteria, limitations, and adhesives.

C. Manufacturer's Installation Instructions: Submit special environmental conditions required for installation and installation techniques.

D. Manufacturer's Certificate: Certify products meet or exceed specified requirements.

1.5 ENVIRONMENTAL REQUIREMENTS

A. Section 01600 - Product Requirements.

B. Do not install adhesives when temperature or weather conditions are detrimental to successful installation.

1.6 SEQUENCING

A. Section 01100 - Summary: Work sequence.

B. Sequence Work to ensure firestopping and vapor retarder materials are in place before beginning Work of this section.

1.7 COORDINATION

A. Section 01300 - Administrative Requirements: Coordination and project conditions.

B. Coordinate Work with Section 05500 and Section 13120 for installation of vapor barrier.

PART 2 - PRODUCTS

2.1 BOARD INSULATION

A. Manufacturers:
1. Celotex - Polyisocyanurate Insulation Model THERMAX Metal Building Board
2. Rmax - Polyisocyanurate Insulation Model THERMAROOF Plus - 3
3. Substitutions: Section 01600 - Product Requirements.

2.2 COMPONENTS

A. Polyisocyanurate Insulation: ASTM C1289 Rigid Board, glass fiber reinforced, Type I, Class 1 or 2. Conforming to the following:
1. Board Density: 2.0 lb/cu ft
2. Board Size: 4’ x 8’ inch
3. Board Thickness: 2.0 inches base course, 1.5 inches top. Total 3.5 inches of insulation
4. Facing: Factory applied skin of aluminum foil on both faces
5. Total Thermal Resistance: Aged R of 24
6. Water Absorption: In accordance with ASTM C209 < 1% percent by volume maximum
7. Water Vapor Transmission: In accordance with ASTM E 96 < 1 perm
8. Compressive Strength: Minimum 20 psi

9. Board Edges: Square edges
10. Flame/Smoke Properties: 25 / <250 in accordance with ASTM E84 labeled by agency acceptable to authorities having jurisdictions.

2.3 ACCESSORIES

A. Adhesive: Type recommended by insulation Manufacturer for application.

B. Adhesive: Type recommended by insulation fastener Manufacturer for application.

C. Adhesive: Gun grade, mastic type, compatible with insulation and substrate; Type recommended by insulation Manufacturer for application.

D. Sheet Vapor Retarder: Provide vapor barriers with the following properties based on testing manufacture's standard products, according to test methods indicated, applied to substrates simulating Project conditions using same materials and application methods to be used for Project
1. ALUMISEAL CORPORATION:
   a. Sheet vapor barrier: Zero Perm Vapor Barrier
   b. Vapor barrier tape: Zero Perm Pressure Sensitive Tape
2. Water-vapor transmission (flat condition): 0.000 grams/hr/sq meter, per ASTM E-96 Procedure B
3. Water-vapor transmission (flex test): 0.0134 grams/100 sq in, per petri dish method, Standard test #2
4. Tensile strength: 25,000 lbs/sq in per ASTM D882-64T
5. Bursting strength: 96.6 lbs/sq in, per ASTM D 77463T
6. Tear strength: 1,800 lbs/sq in, per ASTM D 1004-66
7. Melting point: 480 degrees F, per Fisher-Johns test
8. Fire hazard classification:
   a. Flame spread: 5 per ASTM E-84 and NFDA 255
   b. Fuel contributed: 0 per ASTM E-84 and NFDA 255
   c. Smoke developed: 5 per ASTM E-84 and NFDA 255

E. Tape: Bright aluminum self-adhering type, mesh reinforced, 2 inch wide.

F. Insulation Fasteners: Impaling clip of plastic with washer retainer and clips, to be adhered to surface to receive board insulation, length to suit insulation thickness and substrate, capable of securely and rigidly fastening insulation in place until installation of metal roof panel.

PART 3 - EXECUTION

3.1 EXAMINATION

A. Section 01300 - Administrative Requirements: Coordination and project conditions.

B. Verify substrate, adjacent materials, and insulation boards are dry and ready to receive insulation .

C. Verify substrate surface is flat, free of materials or substances affecting adhesive bond.

3.2 INSTALLATION - ROOF

A. Install boards on roof.
1. Attach to the roof deck with Manufacturer approved fasteners.
2. Place boards in method to maximize contact bedding.
3. Stagger side and end joints, stagger joints from top and bottom layers.
4. Butt edges and ends tight to adjacent board and to protrusions.
5. Tape seal in place to ensure continuity of vapor retarder.
6. Install material in accordance with Manufacturer's instructions and per reviewed submittals.
7. Coordinate with work of other Sections.
8. Boards must be kept completely dry before and throughout construction.

B. Cut and fit insulation tight to protrusions or interruptions to insulation plane.

C. Install Sheet Vapor Barrier.
1. Tape seal in place to ensure continuity of vapor retarder.
2. Install material in accordance with Manufacturer's instructions and per reviewed submittals.
3. Coordinate with work of other Sections.

3.3 PROTECTION OF INSTALLED CONSTRUCTION

A. Section 01700 - Execution Requirements: Protecting installed construction.

B. Do not permit damage to insulation prior to covering.

END OF SECTION

SECTION 07213

BATT INSULATION

PART 1 - GENERAL

1.1 SUMMARY

A. Section includes batt insulation in exterior wall construction; Sound attenuation insulation; and batt insulation for filling perimeter window and door shim spaces, and crevices in exterior wall and roof.

B. Related Sections:
1. Section 07260 - Vapor Retarders: Vapor retarder materials adjacent to insulation
2. Section 07212 - Board Insulation
3. Section 07840 - Firestopping
4. Section 09260 - Gypsum Board Assemblies: Acoustic insulation.

1.2 REFERENCES

A. ASTM International:
1. ASTM C665 - Standard Specification for Mineral-Fiber Blanket Thermal Insulation for Light Frame Construction and Manufactured Housing
2. ASTM E84 - Standard Test Method for Surface Burning Characteristics of Building Materials.

B. National Fire Protection Association:
1. NFPA 255 - Standard Method of Test of Surface Burning Characteristics of Building Materials.

C. Underwriters Laboratories Inc.:
1. UL 723 - Tests for Surface Burning Characteristics of Building Materials.

1.3 SYSTEM DESCRIPTION

A. Materials of This Section: Provide thermal protection to vapor retarder in conjunction with vapor retarder materials in Section 07260.

1.4 SUBMITTALS

A. Section 01330 - Submittal Procedures: Submittal procedures.

B. Product Data: Submit data on product characteristics, performance criteria, and limitations.

C. Manufacturer's Certificate: Certify products meet or exceed specified requirements.

1.5 QUALITY ASSURANCE

A. Source Limitations: Obtain each type of building insulation through one source from a single Manufacturer.

B. Fire-Test-Response Characteristics: Provide insulation and related materials with the fire-test-response characteristics indicated, as determined by testing identical products per test method indicated below by UL or another testing and inspecting agency acceptable to authorities having jurisdiction. Identify materials with appropriate markings of applicable testing and inspecting agency.
   1. Surface-Burning Characteristics: ASTM E 84
   2. Fire-Resistance Ratings: ASTM E 119
   3. Combustion Characteristics: ASTM E 136.

1.6 QUALIFICATIONS

A. Manufacturer: Company specializing in manufacturing products specified in this section with minimum three years documented experience.

B. Applicator: Company specializing in performing work of this section with minimum three years documented experience.

C. Comply with governing codes and regulations

1.7 COORDINATION

A. Section 01300 - Administrative Requirements: Coordination and project conditions.

B. Coordinate the Work with Section 07260 for installation of vapor retarder.

1.8 DELIVERY, STORAGE, AND HANDLING

A. Section 01600 - Product Requirements: Product storage and handling requirements.

B. Protect insulation materials from physical damage and from deterioration by moisture, soiling, and other sources. Store inside and in a dry location. Comply with Manufacturer's written instructions for handling, storing, and protecting during installation.

PART 2 - PRODUCTS

2.1 BATT INSULATION

A. Manufacturers:
   1. CertainTeed Insulation
   2. Johns Manville Model ComfortTherm
   3. Knauf Fiber Glass
   4. Owens Corning Fiberglas
   5. Substitutions: Section 01600 - Product Requirements.

2.2 COMPONENTS

A. Thermal Batt Insulation: ASTM C665, Type II, Class A, Category 1; Poly-encasulated Formaldehyde-free Thermal fiber glass fiber insulation; friction fit, conforming to the following:
1. Thermal Resistance: R-19 at 6” studs
2. Thermal Resistance: R-15 at 3 5/8” studs
3. Batt Size: 16 inch
4. Facing: Faced on one side with Permeablilty, Facer film -0.5 Perms
5. Flame/Smoke Properties: Spread 25 or less in accordance with ASTM E84.

B. Acoustical Batt Insulation: ASTM C665, Type II, Class A, Category 1; Poly-encasulated Formaldehyde-free Acoustical fiber glass fiber insulation; friction fit, conforming to the following:
1. 6 ½” batt at 6” studs
2. 3 ½” batt at 3 5/8” studs
3. Batt Size: 16 inch
4. At toilet rooms: Facing: Faced on one side with Permeablilty, Facer film -0.5 Perms
5. Flame/Smoke Properties: Spread 25 or less in accordance with ASTM E84.

C. Steel wire; galvanized; type and size to suit application.

D. Tape: Polyethylene self-adhering type, mesh reinforced, 2 inch wide.

PART 3 - EXECUTION

3.1 EXAMINATION

A. Section 01300 - Administrative Requirements: Coordination and project conditions.

B. Verify substrate, adjacent materials, and insulation are dry and ready to receive insulation.
1. Proceed with installation only after unsatisfactory conditions have been corrected.

3.2 INSTALLATION

A. Comply with insulation Manufacturer's written instructions applicable to products and application indicated.

B. Install in exterior spaces without gaps or voids. Do not compress insulation.

C. Trim insulation neatly to fit spaces. Insulate miscellaneous gaps and voids.

D. Fit insulation tight in spaces and tight to exterior side of mechanical and electrical services within plane of insulation.

E. Install with factory applied vapor retarder membrane facing warm side of building spaces. Lap ends and side flanges of membrane between framing members.

F. Metal Framing: Place vapor retarder on warm side of insulation; lap and seal sheet retarder joints over member face. Install per Manufacturer's written instructions.

G. At chase areas; Retain in place with spindle fasteners at 16 inches oc. Retain insulation in place with wire secured to framing members.

H. Tape seal butt ends, lapped flanges, and tears or cuts in membrane.

I. Extend vapor retarder tight to full perimeter of adjacent window and door frames and other items interrupting plane of membrane. Tape seal in place.

J. Coordinate Work this section with vapor retarder specified in Section 07260.

3.3 INSTALLATION OF INSULATION IN CEILINGS FOR SOUND ATTENUATION

A. Install 3-inch- thick, unfaced glass-fiber blanket insulation over suspended ceilings at partitions in a width that extends insulation 48 inches on either side of partition.

B. If indicated on documents, install 3-inch-thick, unfaced glass-fiber blanket insulation over suspended ceilings so that insulation extends over entire ceiling.

3.4 FIELD QUALITY CONTROL

A. Inspections/observations will be performed by Owner to ascertain compliance with specified requirements in accordance with the General Conditions. Do not cover up installation of insulation without Owner review.

3.5 PROTECTION

A. Protect installed insulation from damage due to harmful weather exposures, physical abuse, and other causes. Provide temporary coverings or enclosures where insulation is subject to abuse and cannot be concealed and protected by permanent construction immediately after installation.

END OF SECTION

SECTION 07260

VAPOR RETARDANT BARRIER

PART 1 - GENERAL

1.1 SUMMARY

A. Section includes sheet materials for controlling vapor diffusion.

B. Related Sections:
1. Section 03300 – Cast in Place Concrete.

1.2 REFERENCES

A. ASTM International:
1. ASTM C920 - Standard Specification for Elastomeric Joint Sealants.
2. ASTM E96 - Standard Test Methods for Water Vapor Transmission of Materials.

B. Sealant, Waterproofing and Restoration Institute:
1. SWRI - Sealant Specification.

1.3 PERFORMANCE REQUIREMENTS

A. Maximum Vapor Permeability (Perm): <.01 ng/S/m/Pa measured in accordance with ASTM E96 Method E.

1.4 SUBMITTALS

A. Section 01330 - Submittal Procedures: Submittal procedures.

B. Product Data: Submit data indicating material characteristics, performance criteria, and limitations.

C. Manufacturer’s Installation Instructions: Submit preparation and installation requirements, techniques.

1.5 QUALITY ASSURANCE

A. Perform Work in accordance with SWRI - Sealant and Caulking Guide Specification requirements for materials and installation.

1.6 MOCKUP

A. Section 01400 - Quality Requirements: Requirements for mockup.

B. Construct mock-up of including vapor retarder installation at roof.

C. Locate where directed by Architect/Engineer.

D. Incorporate accepted mockup as part of Work.

1.7 SEQUENCING

A. Do not install vapor retarder until items penetrating vapor retarder are in place.

B. Coordination installation with scheduled concrete pours to avoid delays. Make provisions for installation of work by other trades.

PART 2 - PRODUCTS

2.1 VAPOR RETARDERS

A. Manufacturers:
1. Alumiseal Corp. Model Zero Perm Vapor Barrier
2. Fiberweb Corp. Model Fiberweb 210
3. Fortifiber Corp. Model Moistop
4. Substitutions: Section 01600 - Product Requirements.

2.2 COMPONENTS

A. Sheet Retarder Type 1, Grade “A”, Style 4: Fiberglass reinforced polyethylene film for below grade application, 12 mil thick, perm rating of <0.01.

B. Sheet Retarder Type 2 formed by laminating a 1-mil thickness of aluminum, between two 1/2-mil thicknesses of mylar polyester, thick, perm rating of <0.01.

C. Adhesive Type 2: Compatible with sheet retarder and substrate, permanently non-curing.

2.3 ACCESSORIES

A. Tape: (Type1) Polyester self-adhering type, mesh reinforced, 2 inch wide, compatible with sheet material.

B. Tape: (Type 2) Pressure sensitive tape compatible with Sheet Retarder.

PART 3 - EXECUTION

3.1 PREPARATION

A. Remove loose or foreign matter capable of impairing adhesion.

B. Clean and prime substrate surfaces to receive adhesive.

C. Do not proceed until sand fill is level and without voids, and plumbing and electrical rough-ins are complete

3.2 INSTALLATION

A. Vapor Barrier For Below Slab: Secure sheet retarder Type 1, Apply continuously directly over sand fill. Lap edges and ends minimum 6 inches and tape joints to ensure complete and continuous seal.

B. Protect complete membrane from damage. Prior to pouring concrete, inspect membrane for punctures of damage and repair all punctures.

C. Vapor Retarder For Roof: Type 2 install vapor retarder continuously. Seal edges and ends with tape. Position laps over firm bearing. Adhesive Bond to common structure materials, also to seal lap joints.

END OF SECTION

SECTION 07413

SHEET METAL ROOF / WALL PANELS

PART 1 - GENERAL

1.1 SUMMARY

A. Section Includes:
1. Structural standing seam metal roofing
2. Metal vented soffit panels
3. Flush metal siding panels
4. Metal Roof Curbs
5. Metal Roof Walkways

B. Related Sections:
1. Section 07213 - Insulation Board
2. Section 07900 - Joint Sealers
3. Section 09900 - Painting

1.2 REFERENCES

A. American Iron and Steel Institute:
1. AISI SG-973 - Cold-Formed Steel Design Manual.

B. American Society of Civil Engineers:
1. ASCE 7 - Minimum Design Loads for Buildings and Other Structures.

C. American Society for Testing and Materials:
1. ASTM A792/A792M - Standard Specification for Steel Sheet, 55% Aluminum-Zinc Alloy Coated by the Hot-Dip Process, General Requirements

D. National Roofing Contractors Association:
1. NRCA - The NRCA Roofing and Waterproofing Manual.

E. Sheet Metal Contractors:
1. SMACNA - Architectural Sheet Metal Manual.

F. Underwriters Laboratories Inc.:
1. UL 580 - Tests for Uplift Resistance of Roof Assemblies.

1.3 DESIGN REQUIREMENTS

A. Roof Loads: Design roofing to resist live and dead loads with 1/240 maximum deflection.
1. Live Loads: 20PSF or as required by building code, whichever is greater
2. Dead Loads: Actual weight of materials incorporated into Work.

B. Wind Loads: Design and size components to withstand positive and negative wind loads, including increased loads at building corners, edges, and field of roof.
   1. Design Wind Load: As calculated in accordance with International Building Code (IBC) and ASCE 7 basic wind speed, exposure C.

C. Wind Uplift Resistance: UL 580; Class 90.

D. Air Infiltration: Limit air leakage through roof assembly to 0.03 cfm/sq ft of wall area, measured at reference differential pressure across assembly of 6.24 psf as measured in accordance with ASTM E283.

E. Water Leakage: None, when measured in accordance with ASTM E1646-95 with test pressure of 12.00 psf pressure differential with no uncontrollable water leakage when five gallons per hour of water is sprayed per square foot of roof area.

F. Exterior Components: Accommodate the following without damage to system, components or deterioration of seals.
   1. Movement within system
   2. Movement between system and perimeter framing components
   3. Dynamic loading and release of loads
   4. Deflection of structural support framing
   5. Expansion and contraction from temperature range of 210 degrees F over 12-hour period.

G. ALBEDO REQUIREMENTS: Actual independent laboratory certified test results must be submitted. Manufacturer must be an EnergyStar listed partner (www.energystar.gov).
   1. Emissivity (roof ability to emit absorbed solar energy) - greater than or equal to 0.85 for roofs with a 2:12 slope or steeper when tested at 14,000 hours irradiance per ASTM C1371.
   2. Initial Solar Reflectance (roof ability to reflect solar energy) - greater than or equal to 0.25 for roofs with a 2:12 slope or steeper when tested at 14,000 hours irradiance per ASTM C1549.
   3. Recycled Content - manufactured products must contain a minimum of 25% post-consumer recycled content.

1.4 SUBMITTALS

A. Section 01330 - Submittal Procedures

B. Shop Drawings:
   1. Indicate metal roofing and soffit panel profiles, jointing patterns, jointing details, fastening methods, flashings, terminations, and installation details.

C. Product Data:
   1. Submit data on metal types, finishes, and characteristics.
   2. Submit color charts for finish selection to Architect and TxDOT Project Manager.

D. Design Data:

1. Submit structural design calculations for metal roofing in conjunction with structural supports within construction documents signed and sealed by professional engineer licensed in the State of Texas.

E. Manufacturer's Installation Instructions: Submit instructions including special procedures for roofing penetrations, flashings, and perimeter conditions requiring special attention.

F. Manufacturer's Certificate: Certify Products meet or exceed specified requirements.

G. Submittals for Closeout

1. Project Record Documents: Record actual locations of concealed components and utilities. Record any changes to Construction Documents during construction and provide original As-Built set to TxDOT Project Manager at end of project. Contractor is required to maintain As-Built set on site and when changes occur. Progress Payments will be based on maintaining current As-Built set on a monthly basis and will be checked by TxDOT Project Manager.

2. Upon completion of erection, submit written Certification prepared and signed by the design Professional Engineer, qualified herein, attesting to his/her field verification of the erection being in accordance with his/her shop drawings.

1.5 QUALITY ASSURANCE

A. Perform Work in accordance with AISC - Quality Certification Program Category MB. MBMA - Metal Building Systems Manual and MBMA - Low Rise Building Systems Manual. Maintain one copy on site.

B. Manufacturer Qualifications: Company specializing in manufacturing the Products specified in this section with minimum five years documented experience with certification statement.

C. Erector Qualifications: Company specializing in performing the work of this Section with minimum of five years documented experience and certified trained by Manufacturer. Project Foreman must have specific training in proper installation of specified wall and roof systems with certification, and must submit qualifications of Foreman stated experience with this roofing system. Submit five references from five different architects or owners for systems that have been installed for at least two years and stating that the performance has been satisfactory.

D. Design structural components, develop shop drawings, and perform shop and site work under direct supervision of a Professional Structural Engineer experienced in design of this work and licensed in the State of Texas.

1.6 QUALIFICATIONS

A. Manufacturer: Company specializing in manufacturing Products specified in this section shall have a minimum of five years documented experience.

B. Installer: Company specializing in performing work of this section shall have a minimum of three years documented experience. This company shall provide owner with a Roofing Manufacturing and Installer's Certification that the roof has been designed based on the design criteria as specified and installed according the Manufacturer's standards. Contractor to provide copy of Manufacturer's approved Installer training certificate.

C. A certified Installer shall be on the job site, at all times during installation of the roof.

D. The roof shall be inspected by a certified Manufacturer's representative at least three separate occasions: at the beginning, midpoint and at completion of installation and all deficiencies shall be corrected, prior to substantial completion. Manufacturer's field reports must be sent directly to TxDOT within five days of each inspection.

E. The design of the metal roofing and structural supports shall be designed by a Professional Engineer experienced in design of this Work and licensed in State of Texas.

1.7 DELIVERY, STORAGE, AND HANDLING

A. Stack material to prevent twisting, bending, and abrasion, and to provide ventilation. Slope metal sheets to ensure drainage.

B. Prevent contact with materials causing discoloration or staining.

1.8 FIELD MEASUREMENTS

A. Verify field measurements prior to fabrication.

1.9 COORDINATION

A. Section 01300 - Administrative Requirements

B. Coordinate with Work of Section 07213 for insulation installed within roof assembly.

1.10 WARRANTY

A. Section 01700 - Execution Requirements: Requirements for warranties.

B. Furnish 20 year Galvalume substrate Manufacturer warranty for sheet metal roofing against structural failure, corrosion, and perforation.

C. Furnish 2 year Contractor warranty against leakage due to construction methods used for installation of roof, flashing, and all penetrations.

D. Weather Tightness Warranty: Provide a 20 (twenty) year warranty for occupied buildings against leakage due to construction methods used for installation of roof, flashing, and all penetrations. Provide a Single Source warranty from the Manufacturer with a No Dollar Limit (NDL) during the warranty period starting from the time of Substantial Completion throughout length of warranty. The roofing Manufacturer warrants to the Building Owner (TxDOT) that the roofing system will not allow intrusion

of water from the exterior into the building during the warranty period. Manufacturer representative will make at least two inspections during the roof installation and one final inspection to confirm correct roofing installation per Manufacturer's requirements. A certified Installer must be on site at all times during the roof installation. Provide Manufacturers representative field reports directly to TxDOT Project Manager.

F. Submit sample of Manufacturer's warranty for review when other shop drawings are submitted. Final warranty will be signed by Manufacturer and Installer, but will not require signature of the owner.

PART 2 - PRODUCTS

2.1 MANUFACTURED SHEET METAL ROOFING, SIDING, SOFFITS, ETC.

A. Manufacturers:
1. ALERT
2. AEP Span (SpanLok-HP, Smooth flat Panel)
3. MBCI. –BattenLock, Smooth flat panel
4. LM Curbs – Mechanical Equipment supports, Roof Curbs and Unistrut Roof Walkways connected with S-5-U connectors
5. Substitutions: Section 01630 - Product Requirements.

B. Structural Standing Seam Metal Roofing: Factory formed metal roofing panel system with concealed fasteners:
1. Roof Panel Materials: Pre-finished steel sheet 22 gauge base metal, minimum thickness
2. Panel Width: Nominal 16 inches
3. Panel Profile: Flat Panel (Striations, ribs or pencil ribs are unacceptable)
4. Color: Pre-finished Galvalume.
5. Length – 80' long panels maximum ; continuous length without joints.

C. Wall panels, for gable ends, fascias, siding, or as shown on drawings:
1. Wall Panel Materials: Pre-finished steel sheet 24 gauge base metal, minimum thickness.
2. Panel Width: Nominal 36 inches
3. Panel Profile: R- panel profile
4. Color: Pre-finished Kynar. Color as specified by Architect.

D. Roof Curbs: LM Curbs

E. Roof Walkways: LM Curbs

F. Metal Soffit Panels: Factory formed metal soffit panel system with concealed fasteners:
1. Panel Materials: Pre-finished steel sheet 24 gauge base metal thickness
2. Panel Width: Nominal 12 inches
3. Panel Profile: Flat and perforated or punched as shown on drawings (.032" painted aluminum for perforated panels)
4. Panel Depth: Nominal 1/2 inches

5. Panel Joint: Interlocked
6. Perforated panels shall have 1/8” round perforations on 0.324” centers with a minimum of 13% open area
7. Minimum 24 gauge metal thickness with L12B male/female edges
8. Color: Pre-finished Kynar. Color as specified by Architect.

2.2 SHEET METAL MATERIALS

A. Pre-Finished Galvalume Steel Sheet: ASTM A792 coil coated.
   1. Base Metal: ASTM A792/A792M - Standard Specification for Steel Sheet, 55% Aluminum-Zinc Alloy Coated by the Hot-Dip Process, General Requirements
   2. Unexposed Finish: Manufacturer’s standard Acrylic coating.

2.3 ACCESSORIES

A. Fasteners: Same material and finish as roofing metal, with soft neoprene washers where exposed.

B. Curbs and all accessories to be provided by or approved by Manufacturer.

C. Field Sealants:
   1. Color coordinated primerless polyurethane in exposed locations and high grade non-skinning nondrying synthetic butyl where there is no exterior exposure such as between laps.
   2. Refer to section 07900 of these specifications.
   3. Do not use sealants containing asphalt.

2.4 FABRICATION

A. Panels:
   1. Provide factory formed panel widths of 16", with a 2" high standing seam. Form sections shape as indicated on Drawings, accurate in size, square, and free from distortion or defects. Form panels and accessories in factory utilizing fixed base roll-formers and provide signed affidavit verifying factory fabrication. The use of portable roll-formers is specifically prohibited.
   2. On-site or field roll-formed panels are not acceptable.
   3. Provide panels in full length from ridge to eave.
   4. Roof panels shall have flush horizontal and vertical surfaces to facilitate sealing at terminations. Panel configurations that create voids and require supplemental closure devices are acceptable.

B. Seams:
   1. Panel seams shall interlock entire length of seam.
   2. Design standing seam to lock up and resist joint disengagement during design wind uplift conditions as calculated to comply with local building codes and design uplift criteria.
   3. Provide factory sealant within confines of trailing edge of female seam leg to aid in resistance of leaks and provide panel-to-panel seal while allowing

expansion and contraction movement, and the seams shall be continuously locked or crimped together by mechanical means during installation.

C. Clips:
1. Provide UL listed clip designed to allow panels to thermally expand and contract and provide a minimum of ± 1 inch of thermal movement. Clip shall incorporate a self-centering feature to allow a minimum of 1" of movement in both directions along panel length.
2. Clip shall be designed to meet positive and negative pressures as calculated per local building code and as engineered by the roofing system Manufacturer.
3. Provide two-piece floating clips to allow vertical adjustment to assure alignment.

D. Anchors: Engineer panels to use concealed anchors that permit expansion and contraction, except at end laps, ridges and hips.
1. Fabricate cleats of same material as sheet, to interlock with sheet.

E. Fascias/Trim/Flashings:
1. Pre-finished sheet metal designed by the Manufacturer in the same gauge, material and finish as the structural standing seam metal roofing system.
2. Locations, design, sealing and fastening methods as per the Manufacturer's approved engineered shop drawings.
3. Fabricate fascia, trim, flashing, and other metal components from same material as metal roof panels. Provide exposed metal surfaces with same finish as exposed face of metal roof panels.

F. Fabricate starter strips of same material and color as sheet, continuous, to interlock with sheet.

G. Form flashing and edging pieces in longest practical lengths overlapping and sealing with down slope pieces or adjacent pieces or horizontal planes in accordance with roofing Manufacturer's specifications.

H. Hem exposed edges on underside 1/2 inch; miter and seam corners.

I. At moving joints, use sealed lapped, bayonet-type or interlocking hooked seams in accordance with Roofing Manufacturer's Specifications.

J. Fabricate corners from one piece with minimum 18 inch long legs; seam for rigidity, seal with sealant as and if necessary in same color as roof panels.

K. Fabricate vertical faces with bottom edge formed outward 1/4 inch and hemmed to form drip. (where applicable)

2.5 FINISH

A. Pre-Finished Galvalume Steel Sheet: ASTM A792 coil coated.

PART 3 - EXECUTION

3.1 CONNECTING WORK

A. General:
1. Field cut materials by shearing only cutting by torch or saw is not permitted.
2. Do not apply roofing during inclement weather.
3. Do not apply roofing to damp or frozen deck surface.
4. Do not expose materials vulnerable to water, wind or sun damage in quantities greater than can be weatherproofed during the same day.
5. Rigidly fasten Ridge of metal roof panels and allow free eave movement due to thermal expansion and contraction per the approved shop drawings.
6. Install screws and fasteners with power tools having controlled torque.
7. Locate and space fasteners per the approved shop drawings in true vertical and horizontal alignment.
8. Install Ridge, Hip and penetration flashings per the approved shop drawings as work progresses.

B. Surfaces: The Panel Applicator shall examine all surfaces on which their work is to be applied, and shall notify the architect in writing if not suitable to receive their work. Work on any surface shall constitute acceptance of this surface by the Panel Applicator. After beginning installation, install approximately 500 square feet of panels for Architect's approval, before proceeding with substantial work.

C. Wood Members, Units: Provide wood pressure treated with water-borne preservatives for above ground use. All nailers shall be anchored sufficiently to resist a force of 75 pounds per linear foot in any direction. Provide nailers at all locations required by the roofing Manufacturer (whether shown or not).

3.2 FIELD MEASUREMENTS

A. Field Verification: Panel Applicator must take field measurements to verify or supplement dimensions indicated prior to fabrication of any materials. Where field measurements cannot be made without delaying the work, either establish opening dimensions and proceed with fabricating panels without field measurements or allow for trimming panel units.

3.3 EXAMINATION

A. Section 01300 - Administrative Requirements: Verification of existing conditions before starting work.

B. Metal Hat Channel Substrate (not applicable with engineered component system):
1. Inspect Hat Channels to verify Channels are clean and smooth, free of depressions, waves, or projections, and properly spaced to eaves.
2. Verify hat channel is dry.
3. Verify substrate joints are solidly supported and fastened.

C. Structural Framing Substrate:

1. Verify primary and secondary framing members are installed and fastened, properly aligned and sloped to eaves.
2. Verify eave, soffit and fascia portions of framing are properly aligned, even with no waves depressions or projections and are properly spaced. Do not begin roof panel installation until all deviations are corrected.
3. Verify damaged shop coatings are repaired with touch up paint per Manufacturer's specifications.

D. Verify roof openings, curbs, pipes, sleeves, ducts, or vents through new roof are solidly set, reglets are in place, and securing strips located and adequate for weather tight seals.

E. Verify roofing termination and base flashings are in place, sealed, and secure.

F. Verify insulation is installed with no tears or inconsistencies and ready for roof application.

3.4 PREPARATION

A. Back paint concealed metal surfaces and surfaces in contact with dissimilar metals with protective backing paint to minimum dry film thickness of 15 mil.

3.5 ROOF AND PANEL LAYOUT

A. Measure roof structure before starting.

B. Check substrate for plane and evenness.

C. Layout areas and check for squareness.

D. Balance layout around all penetrations.

E. Equalize first and last panels in a run.

F. Consider all gables and rakes to be "flying".

G. Square off eave lines.

H. Starter panels should be cut to module.

I. Use offset lines to maintain alignment.

J. Identify panel clip layout and spacing.

K. Chalk layout lines for permanent layout.

3.6 INSTALLATION - STANDING SEAM METAL ROOFING

A. Know and follow approved shop drawings.

B. Limit exposure time of underlayments.

C. Check and double check all clip spacings.

D. Check layout often to prevent module gain.

E. Allow for proper thermal movement.

F. Use proper fasteners and sealants.

G. Remove all drill shavings and metal scraps.

H. Install furring to support roof panel side laps and receive fasteners. Use concealed fasteners only.

I. Floating connection at eave end of panel. Conceal fixed ends.

J. Install roofing panels with long dimension perpendicular to eaves terminating 1/4" from end of metal drip edge.

K. Install roofing panels full length from ridge vent to 1/4” from eave drip edge.

L. Any partial panels must be rigidly fixed at one end only. Fixed end must be clearly indicated on shop drawings

M. Install 2.5” articulating clips in accordance with roofing Manufacturer’s Specification to secure roof panels without deforming or oil-canning roof panels.

N. Machine form standing seam between adjacent roofing panels. Hand form joints where machine forming is not possible.

O. Terminate roofing panels with sheet metal trim and flashing for watertight installation. Close and conceal openings between roofing panels, panel seams, and roof substrate in accordance with roofing Manufacturer’s Specification.

P. Paint and hem all edges and ends of roof panels which have been trimmed or cut.

Q. Seal metal joints watertight.

R. Where and if caulk sealant is used sealant must match roofing color.

S. Joints or gaps requiring sealant must be less than 1/16" or reinstallation must occur.

T. Install valleys when needed in one piece. If overlap is necessary, overlap one foot and seal down slope, a minimum 3 feet from end of valley.

3.7 INSTALLATION - SOFFIT PANELS

A. Install perimeter trim, level and aligned perpendicular with fascia.

B. Install soffit panels to form flat, flush surface.

C. Fit soffit panels in single length between perimeter trim.

D. Install perforated soffit panels at locations indicated on Drawings.

E. Adjust panels for uniform joints aligning with roofing flutes where adjacent.

3.8 PROTECTION OF INSTALLED CONSTRUCTION

A. Section 01700 - Execution Requirements: Protecting installed construction.

B. Do not permit traffic over unprotected roof surface.

C. Provide water stop protection at end of every working day to prevent any water infiltration into building. If roof leaks occur, Contractor will respond to emergency calls within 4 hours notice.

END OF SECTION

SECTION - 07614

PREFABRICATED METAL BUILDING ROOF CURBS

PART 1 - GENERAL

1.1 SUMMARY

A. The general conditions and supplemental general conditions of the contract apply to this section as if completely written herein.

B. The General Contractor shall provide all labor, material and equipment to completely install prefabricated Metal Roof Curbs.

C. Prefabricated Metal Roof Curbs shall be used at all roof penetrations including but not limited to HVAC units, skylights, duct openings, pipe penetrations, and exhaust fans.

PART 2 - PRODUCTS

2.1 Prefabricated Metal Roof Curbs shall be manufactured by LMCurbs or approved equal. (LMCurbs, 609 Fisher Road (P.O. Box 5299), Longview, Texas 75604 (75608-5299), 1-903-759-1331, 1-800-284-1412, Fax # 903-759-0879)

PART 3 - CONSTRUCTION

3.1 Curbs shall be constructed using minimum .080, 3003H14 aluminum, or heavier as required to support the load of the equipment, with fully mitered and heli-arc welded corners, integral base plates, with water diverter cricket. Factory installed insulation available upon request.

3.2 Minimum height of Curb shall be 8" above finished roof (or as specified).

3.3 Curbs shall be constructed to match slope of roof and provide a level top surface for mounting of equipment.

3.4 Curb flange shall be constructed to match configuration of roof panel. Side flange shall extend to the next natural seam in the roof panels and conform to seam configurations.

PART 4 - COORDINATION

4.1 Size of curbs and required options shall be coordinated by curb Manufacturer, General Contractor, and mechanical Contractor prior to fabrication.

4.2 Shop drawings bearing architects approval shall be used for the fabrication of the curbs.

END OF SECTION

SECTION 07840

FIRESTOPPING

PART 1 - GENERAL

1.1 SUMMARY

A. Section includes firestopping and through-penetration protection system materials and accessories; firestopping tops of fire rated walls; and smoke sealing at joints between floor slabs and exterior walls.

B. Related Sections:
1. Section 07260 - Vapor Retarders: Vapor retarder materials to adjacent insulation
2. Section 09260 - Gypsum Board Assemblies: Gypsum board fireproofing
3. Division 15 - Mechanical: Mechanical work requiring firestopping
4. Division 16 - Electrical: Electrical work requiring firestopping.

1.2 REFERENCES

A. ASTM International:
1. ASTM E84 - Standard Test Method for Surface Burning Characteristics of Building Materials
2. ASTM E119 - Standard Test Methods for Fire Tests of Building Construction and Materials
3. ASTM E814 - Standard Test Method for Fire Tests of Through-Penetration Fire Stops.

B. Underwriters Laboratories Inc.:
1. UL 263 - Fire Tests of Building Construction and Materials
2. UL 723 - Tests for Surface Burning Characteristics of Building Materials
3. UL 1479 - Fire Tests of Through-Penetration Firestops
4. UL - Fire Resistance Directory.

C. Intertek Testing Services (Warnock Hersey Listed):
1. WH - Certification Listings.

1.3 DEFINITIONS

A. Firestopping (Through-Penetration Protection System): Sealing or stuffing material or assembly placed in spaces between and penetrations through building materials to arrest movement of fire, smoke, heat, and hot gases through fire rated construction.

1.4 SYSTEM DESCRIPTION

A. Firestopping Materials: ASTM E119, ASTM E814, UL 263, UL 1479, to achieve fire ratings of adjacent construction noted in accordance with UL Design Numbers noted on Drawings or noted in Schedule at end of this section.

B. Surface Burning: ASTM E84 UL 723 with maximum flame spread / smoke developed rating of 25/450.

C. Firestop interruptions to fire rated assemblies, materials, and components.

1.5 PERFORMANCE REQUIREMENTS

A. Conform to applicable code for fire resistance ratings and surface burning characteristics.

1.6 SUBMITTALS

A. Section 01330 - Submittal Procedures: Submittal procedures.

B. Product Data: Submit data on product characteristics, performance and limitation criteria.

C. Shop Drawings: For each through-penetration firestop system, show each type of construction condition penetrated, relationships to adjoining construction, and type of penetrating item. Include firestop design designation of qualified testing and inspecting agency that evidences compliance with requirements for each condition indicated.
1. Submit documentation, including illustrations, from a qualified testing and inspecting agency that is applicable to each through-penetration firestop system configuration for construction and penetrating items.
2. Where Project conditions require modification to a qualified testing and inspecting agency's illustration for a particular through-penetration firestop condition, submit illustration, with modifications marked, approved by through-penetration firestop system Manufacturer's fire-protection engineer as an engineering judgment or equivalent fire-resistance-rated assembly.

D. Schedule: Submit schedule of opening locations and sizes, penetrating items, and required listed design numbers to seal openings to maintain fire resistance rating of adjacent assembly.

E. Manufacturer's Installation Instructions: Submit preparation and installation instructions.

F. Manufacturer's Certificate: Certify products meet or exceed applicable code requirements.

G. Engineering Judgments: For conditions not covered by UL or WH listed designs, submit judgments by licensed professional engineer suitable for presentation to authority having jurisdiction for acceptance as meeting code fire protection requirements.

H. Qualification Data: For Installer

1.7 QUALIFICATIONS

A. Manufacturer: Company specializing in manufacturing products specified in this section with minimum three years documented experience.

B. Applicator: Company specializing in performing Work of this section with minimum three years documented experience.

1.8 DELIVERY, STORAGE, AND HANDLING

A. Section 01600 - Product Requirements: Product storage and handling requirements.

B. Deliver through-penetration firestop system products to Project site in original, unopened containers or packages with intact and legible Manufacturers' labels identifying product and Manufacturer, date of manufacture, lot number, shelf life if applicable, qualified testing and inspecting agency's classification marking applicable to Project, curing time, and mixing instructions for multicomponent materials.

C. Store and handle materials for through-penetration firestop systems to prevent their deterioration or damage due to moisture, temperature changes, contaminants, or other causes.

1.9 MOCKUP

A. Section 01400 - Quality Requirements: Requirements for mockup.

B. Apply 1 linear ft of each type of linear firestopping material to representative substrate surface.

C. Apply one of each unit type of firestopping material, such as penetrations through fire rated partition, to representative application.

D. Locate where directed by Architect/Engineer.

E. Incorporate accepted mockup as part of Work.

1.10 ENVIRONMENTAL REQUIREMENTS

A. Section 01600 - Product Requirements.

B. Do not apply materials when temperature of substrate material and ambient air is below 60 degrees F.

C. Maintain this minimum temperature before, during, and for minimum 3 days after installation of materials.

D. Provide ventilation in areas to receive solvent cured materials.

E. Coordinate construction of openings and penetrating items to ensure that through-penetration firestop systems are installed according to specified requirements.

F. Do not cover up through-penetration firestop system installations that will become concealed behind other construction until each installation has been examined by building inspector, if required by authorities having jurisdiction.

PART 2 - PRODUCTS

2.1 FIRESTOPPING

A. Manufacturers:
1. A/D Fire Protection Systems, Inc. Model Firebarrier Firestop Systems
2. Grace Construction Model Flamesafe
3. Hilti Corp. Model Firestop
4. Pecora Corporation Model Firestop
5. USG Corp. Model Firecode
6. Substitutions: Section 01600 - Product Requirements.

B. Product Description: Different types of products by multiple Manufacturers are acceptable as required to meet specified system description and performance requirements; provide only one type for each similar application.
1. Silicone Firestopping Elastomeric Firestopping: Single component silicone elastomeric compound and compatible silicone sealant.
2. Foam Firestopping Compounds: Single component foam compound.
3. Formulated Firestopping Compound of Incombustible Fibers: Formulated compound mixed with incombustible non-asbestos fibers.
4. Fiber Stuffing and Sealant Firestopping: Composite of mineral fiber stuffing insulation with silicone elastomer for smoke stopping.
5. Mechanical Firestopping Device with Fillers: Mechanical device with incombustible fillers and silicone elastomer, covered with sheet stainless steel jacket, joined with collars, penetration sealed with flanged stops.
6. Intumescent Firestopping: Intumescent putty compound which expands on exposure to surface heat gain.
7. Firestop Pillows: Formed mineral fiber pillows.

C. Color: As selected from Manufacturer’s full range of colors.

2.2 ACCESSORIES

A. Primer: Type recommended by firestopping Manufacturer for specific substrate surfaces and suitable for required fire ratings.

B. Installation Accessories: Provide clips, collars, fasteners, temporary stops or dams, and other devices required to position and retain materials in place.

C. Tape: Pressure sensitive masking tape as recommended by the firestopping Manufacturer.

PART 3 - EXECUTION

3.1 EXAMINATION

A. Section 01300 - Administrative Requirements: Coordination and project conditions.

B. Verify openings are ready to receive firestopping.

C. Examine substrates, openings, voids, adjoining construction and conditions under which the Work is to be installed. Confirm compatibility of surfaces scheduled to receive firestopping.

D. Verify that penetrating elements are securely fixed and properly located with the proper space allowance between penetrations and surfaces of openings.

E. Do not proceed with Work until unsatisfactory conditions have been corrected.

3.2 PREPARATION

A. Clean substrate surfaces of dirt, dust, grease, oil, loose material, or other matter affecting bond of firestopping material.

B. Remove incompatible materials affecting bond. Do not apply firestopping and smoke seals to surfaces previously painted or treated with sealers, curing compounds, water repellent or other coatings unless tests have been performed to ensure compatibility of materials. Remove coatings as required.

C. Ensure that anchoring devices, back-up materials, clips, sleeves, supports and other related materials used in the actual fire tests are provided.

D. Install backing or damming materials to arrest liquid material leakage.

3.3 APPLICATION

A. Install material at fire rated construction perimeters and openings containing penetrating sleeves, piping, ductwork, conduit and other items, requiring firestopping.

B. Apply primer where recommended by Manufacturer for type of firestopping material and substrate involved, and as required for compliance with required fire ratings.

C. Apply firestopping material in sufficient thickness to achieve required fire and smoke rating, to uniform density and texture.

D. Compress fibered material to maximum 40 percent of its uncompressed size or per Manufacturers' recommendation.

E. Place foamed material in layers to ensure homogenous density, filling cavities and spaces. Place sealant to completely seal junctions with adjacent dissimilar materials.

F. Remove dam material after firestopping material has cured.

3.4 FIELD QUALITY CONTROL

A. Section 01400 - Quality Requirements: Testing and Inspection Services.

B. Inspect installed firestopping for compliance with specifications and submitted schedule.

C. Notify Consultant when completed installations are ready for inspection prior to concealing or enclosing an area containing firestopping materials.

D. Following field inspections, provide all repair as required to ensure compliance.

3.5 CLEANING

A. Section 01700 - Execution Requirements: Final cleaning.

B. Clean adjacent surfaces of firestopping materials.

3.6 PROTECTION OF INSTALLED CONSTRUCTION

A. Section 01700 - Execution Requirements: Protecting installed construction.

B. Protect adjacent surfaces from damage by material installation.

3.7 SCHEDULES

A. Where UL-classified systems are indicated, they refer to alpha-alpha-numeric designations listed in UL's "Fire Resistance Directory" under product Category XHEZ. Systems below are based on Hilti Firestopping Systems. Other equivalent systems allowed upon approval.

B. Firestop Systems for Metallic Pipes, Conduit, or Tubing FS-1:
   1. UL-Classified Systems: WL 1085 for 1 or 2 hour rated partitions. WL 1111 for 3 hour rated partitions.

C. Firestop Systems for Nonmetallic Pipe, Conduit, or Tubing FS-2:
   1. UL-Classified Systems: WL 2078 for 1 or 2 hour rated partitions. Verify design with Manufacturer for 3 hour rated partitions.

D. Firestop Systems for Electrical Cables FS-3:
   1. UL-Classified Systems: WL 3111 for 1 hour or 2 hour partitions. Verify with Manufacturer for 3 hour rated partitions.

E. Firestop Systems for Cable Trays FS-4:
   1. UL-Classified Systems: WL 4019 for 1 hour or 2 hour partitions. Verify with Manufacturer for 3 hour rated partitions.

F. Firestop Systems for Insulated Pipes FS-5:
   1. UL-Classified Systems: WL 5029 for 1 hour or 2 hour partitions. WL 5073 for 3 hour rated partitions.

G. Firestop Systems for Groupings of Penetrants FS-7:
   1. UL-Classified Systems: WL 8013 for 1 hour or 2 hour partitions. WL 8014 for 3 hour rated partitions.

END OF SECTION

SECTION 07900

JOINT SEALERS

PART 1 - GENERAL

1.1 SUMMARY

A. Section includes sealants and joint backing, precompressed foam sealers, and accessories.

B. Related Sections:
1. Section 07260 - Vapor Retarders: Sealants required in conjunction with vapor retarders
2. Section 07270 - Air Barriers: Sealants required in conjunction with air barriers
3. Section 07840 - Firestopping: Firestopping sealants
4. Section 09260 - Gypsum Board Assemblies: Acoustic sealant
5. Section 09300 - Tile: Sealant used as tile grout.

1.2 REFERENCES

A. ASTM International:
1. ASTM C834 - Standard Specification for Latex Sealants
2. ASTM C919 - Standard Practice for Use of Sealants in Acoustical Applications
3. ASTM C920 - Standard Specification for Elastomeric Joint Sealants
4. ASTM C1193 - Standard Guide for Use of Joint Sealants
5. ASTM D1056 - Standard Specification for Flexible Cellular Materials-Sponge or Expanded Rubber
6. ASTM D1667 - Standard Specification for Flexible Cellular Materials-Vinyl Chloride Polymers and Copolymers (Closed-Cell Foam)
7. ASTM D2628 - Standard Specification for Preformed Polychloroprene Elastomeric Joint Seals for Concrete Pavements.

1.3 SUBMITTALS

A. Section 01330 - Submittal Procedures: Submittal procedures.

B. Products Data: Submit data indicating sealant chemical characteristics, performance criteria, substrate preparation, limitations, and color availability.

C. Product Certificates: For each type of joint sealant and accessory, signed by product Manufacturer.

D. Samples for Initial Selection: Manufacturer's color charts consisting of strips of cured sealants showing the full range of colors available for each product exposed to view.

E. Samples for Verification: For each type and color of joint sealant required, provide Samples with joint sealants in 1/2-inch- wide joints formed between two 6-inch- long strips of material matching the appearance of exposed surfaces adjacent to joint sealants.

F. Manufacturer's Installation Instructions: Submit special procedures, surface preparation, and perimeter conditions requiring special attention.

G. SWRI Validation Certificate: For each elastomeric sealant specified to be validated by SWRI's Sealant Validation Program.

H. Product Test Reports: Based on comprehensive testing of product formulations performed by a qualified testing agency, indicating that sealants comply with requirements.

I. Warranty: Include coverage for installed sealants and accessories failing to achieve airtight seal, exhibit loss of adhesion or cohesion, and sealants which do not cure.

1.4 QUALITY ASSURANCE

A. Source Limitations: Obtain each type of joint sealant through one source from a single Manufacturer.

B. Product Testing: Obtain test results for "Product Test Reports" Paragraph in "Submittals" Article from a qualified testing agency based on testing current sealant formulations within a 36-month period preceding the Notice to Proceed with the Work.

1. Testing Agency Qualifications: An independent testing agency qualified according to ASTM C 1021 to conduct the testing indicated, as documented according to ASTM E 548.
2. Test elastomeric joint sealants for compliance with requirements specified by reference to ASTM C 920, and where applicable, to other standard test methods.
3. Test elastomeric joint sealants according to SWRI's Sealant Validation Program for compliance with requirements specified by reference to ASTM C 920 for adhesion and cohesion under cyclic movement, adhesion-in-peel, and indentation hardness.
4. Test other joint sealants for compliance with requirements indicated by referencing standard specifications and test methods.

1.5 QUALIFICATIONS

A. Manufacturer: Company specializing in manufacturing products specified in this section with minimum three years documented experience.

B. Applicator: Company specializing in performing Work of this section with minimum three years documented experience. Approved by Manufacturer, if required by warranty.

1. Qualifications data: For firms and persons to demonstrate their capabilities and experience. Include lists of complete projects with names and addresses, and name and addresses of architects and owners.

1.6 DELIVERY, STORAGE, AND HANDLING

A. Section 01600 - Product Requirements: Product storage and handling requirements.

B. Deliver materials and products to Project site in original, unopened containers or packages with intact and legible Manufacturers' labels identifying product and Manufacturer, date of manufacture, lot number, shelf life if applicable, qualified testing and inspecting agency's classification marking applicable to Project, curing time, and mixing instructions for multi-component materials.

C. Store and handle materials in compliance with Manufacturers written instructions to prevent their deterioration or damage due to moisture, temperature changes, contaminants, or other causes.

1.7 MOCKUP

A. Section 01400 - Quality Requirements: Requirements for mockup.

B. Construct mockup of sealant joints in conjunction with wall mockups specified in other sections.

C. Construct mockup with specified sealant types and with other components noted.
1. Determine preparation and priming requirements based on Manufacturers recommendations; take action necessary for correction of failure of sealant tests on mock-up.
2. Verify sealants, primers, and other components do not stain adjacent materials.

D. Locate where directed by Architect/Engineer.

E. Incorporate accepted mockup as part of Work.

1.8 ENVIRONMENTAL REQUIREMENTS

A. Section 01600 - Products Requirements.

B. Maintain temperature and humidity recommended by sealant Manufacturer during and after installation.

C. Do not proceed with installation of joint sealants under the following conditions:
1. When ambient and substrate temperature conditions are outside limits permitted by joint-sealant Manufacturer or are below 40 deg F.
2. When joint substrates are wet.
3. Where joint widths are less than those allowed by joint-sealant Manufacturer for applications indicated.
4. Contaminants capable of interfering with adhesion have not yet been removed from joint substrates.

1.9 COORDINATION

A. Section 01300 - Administrative Requirements: Coordination and project conditions.

B. Coordinate Work with sections referencing this section.

1.10 WARRANTY

A. Special Installer's Warranty: Installer's standard form in which Installer agrees to repair or replace elastomeric joint sealants that do not comply with performance and other requirements specified in this Section within specified warranty period.
   1. Warranty Period: Two years from date of Substantial Completion.

B. Special Manufacturer's Warranty: Manufacturer's standard form in which elastomeric sealant Manufacturer agrees to furnish elastomeric joint sealants to repair or replace those that do not comply with performance and other requirements specified in this Section within specified warranty period.
   1. Warranty Period: Ten years from date of Substantial Completion.

C. Special warranties specified in this Article exclude deterioration or failure of elastomeric joint sealants from the following:
   1. Movement of the structure resulting in stresses on the sealant exceeding sealant Manufacturer's written specifications for sealant elongation and compression caused by structural settlement or errors attributable to design or construction.
   2. Disintegration of joint substrates from natural causes exceeding design specifications.
   3. Mechanical damage caused by individuals, tools, or other outside agents.
   4. Changes in sealant appearance caused by accumulation of dirt or other atmospheric contaminants.

PART 2 - PRODUCTS

2.1 JOINT SEALERS

A. Manufacturers:
   1. Sonneborn Building Products
   2. Pecora Corp.
   3. Tremco Sealant / Weatherproofing Division
   4. Substitutions: Section 01600 - Products Requirements.

2.2 MATERIALS, GENERAL

A. Compatibility: Provide joint sealants, backings, and other related materials that are compatible with one another and with joint substrates under conditions of service and application, as demonstrated by sealant Manufacturer, based on testing and field experience.

B. Colors of Exposed Joint Sealants: As selected by Architect from Manufacturer's full range.

C. Products Description: Sealant Type ___

1. High Performance General Purpose Exterior (Nontraffic) Sealant: Polyurethane; ASTM C920, Grade NS, Class 25, Uses M, G, and A; single component.
   a. Type: Sonolastic NP1 manufactured by Sonneborn.
   b. Color: Standard colors matching finished surfaces.
   c. Applications: Use for:
      1) Control, expansion, and soft joints in masonry
      2) Joints between concrete and other materials
      3) Joints between metal frames and other materials
      4) Other exterior nontraffic joints for which no other sealant is indicated.
2. General Purpose Traffic Bearing Sealant Polyurethane; ASTM C920, Grade P, Class 25, Use T; multi- component.
   a. Type: Sonolastic SL2 manufactured by Sonneborn
   b. Color: Standard colors matching finished surfaces
   c. Applications: Use for exterior and interior pedestrian and vehicular traffic bearing joints.
3. Exterior Foam Expansion Joint Sealer: Precompressed foam sealer; Polyurethane with water-repellent; products recommended by Manufacturer for traffic-bearing use.
   a. Type: Expansion-Joint Filler manufactured by Sonneborn
   b. Color: Face color as selected
   c. Size: As required to provide weathertight seal when installed
   d. Applications: Use for exterior wall expansion joints and parking deck expansion joints.
4. Exterior Metal Lap Joint Sealant: Butyl or polyisobutylene, non-drying, non-skinning, non-curing.
   a. Type: BC-158 manufactured by Pecora Corporation
   b. Applications: Use for concealed sealant bead in sheet metal work and concealed sealant bead in siding overlaps.
5. General Purpose Interior Sealant: Acrylic emulsion latex; ASTM C834, single component, paintable.
   a. Type: Sonolac manufactured by Sonneborn
   b. Color: Standard colors matching finished surfaces
   c. Applications: Use for interior wall and ceiling control joints, joints between door and window frames and wall surfaces, and other interior joints for which no other type of sealant is indicated.:
6. Mildew-resistant Sealant: One-part acetoxy silicone; ASTM C920, Uses G and A; single component, mildew resistant.
   a. Type: Omniplus manufactured by Sonneborn
   b. Applications: Use for joints between plumbing fixtures and floor and wall surfaces, and joints between break room and toilet room counter tops and wall surfaces.

7. Acoustical Sealant: Acrylic sealant; ASTM C920, Grade NS, Class 12-1/2, Uses M and A; single component, solvent release curing, non-skinning.
   a. Type: Tremflex manufactured by Tremco
   b. Applications: Use for concealed locations only at acoustically rated construction.
      1) Provide sealant bead between top stud runner and structure and between bottom stud track and floor.

2.3 ACCESSORIES

A. Primer: Non-staining type, recommended by sealant Manufacturer to suit application.

B. Joint Cleaner: Non-corrosive and non-staining type, recommended by sealant Manufacturer; compatible with joint forming materials.

C. Joint Backing: Round foam rod compatible with sealant; ASTM C 1330, closed cell PVC; oversized 30 to 50 percent larger than joint width.
   1. Type: Closed Cell backer rod manufactured by Sonneborn
   2. Type: Green Rod manufactured by Nomaco, Inc.

D. Bond Breaker: Pressure sensitive tape recommended by sealant Manufacturer to suit application.

E. Acoustical Tape: Premolded, closed cell PVC Foam Strip; Armaflex Insulation Tape manufactured by Armstrong.

PART 3 - EXECUTION

3.1 EXAMINATION

A. Section 01300 - Administrative Requirements: Coordination and project conditions.

B. Verify substrate surfaces and joint openings are ready to receive work.

C. Verify joint backing and release tapes are compatible with sealant.

D. Examine joints indicated to receive joint sealants, with Installer present, for compliance with requirements for joint configuration, installation tolerances, and other conditions affecting joint-sealant performance.
   1. Proceed with installation only after unsatisfactory conditions have been corrected.

3.2 PREPARATION

A. Remove loose materials and foreign matter impairing adhesion of sealant.

B. Clean and prime joints.

C. Perform preparation in accordance with ASTM C1193.

D. Protect elements surrounding Work of this section from damage or disfiguration.

3.3 INSTALLATION

A. Perform installation in accordance with ASTM C1193.

B. Perform acoustical sealant application work in accordance with ASTM C919.

C. Measure joint dimensions and size joint backers to achieve the following, unless otherwise indicated:
1. Width/depth ratio of 2: 1
2. Neck dimension no greater than 1/3 of joint width
3. Surface bond area on each side not less than 75 percent of joint width.

D. Install bond breaker where joint backing is not used.

E. Install sealant free of air pockets, foreign embedded matter, ridges, and sags.

F. Apply sealant within recommended application temperature ranges. Consult Manufacturer when sealant cannot be applied within these temperature ranges.

G. Tool joints concave, slightly below adjoining surfaces. Where horizontal joints are between a horizontal surface and vertical surface, fill joint to form a slight convex (cove), so that joint will not trap water or dirt.

H. Install sealants with complete ‘wetting’ of joint bonding surfaces equally on opposite sides.

I. Precompressed Foam Sealant: Do not stretch; avoid joints except at corners, ends, and intersections; install with face 1/8 to ¼ inch below adjoining surface.

J. Compression Gaskets: Avoid joints except at ends, corners, and intersections; seal joints with adhesive; install with face 1/8 to ¼ inch below adjoining surface.

3.4 CLEANING

A. Section 01700 - Execution Requirements: Final cleaning.

B. Clean adjacent soiled surfaces.

3.5 PROTECTION OF INSTALLED CONSTRUCTION

A. Section 01700 - Execution Requirements: Protecting installed construction.

B. Protect sealants until cured.

3.6 SCHEDULE

A. Exterior Joints for Which No Other Sealant Type is Indicated: Type1.

B. Control and Expansion Joints in Paving: Type 2.

C. Joints between Concrete Panels and Between Panels and Adjacent Work: Type 1.

D. Control, Expansion, and Soft Joints in Masonry, and Between Masonry and Adjacent Work: Type 1.

E. Lap Joints in Exterior Sheet Metal Work: Type 4.

F. Butt Joints in Exterior Metal Work and Siding: Type 1.

G. Joints between Exterior Metal Frames and Adjacent Work (except masonry): Type 1.

H. Under Exterior Door Thresholds: Type 4.

I. Interior Joints for Which No Other Sealant is Indicated: Type 5.

J. Control and Expansion Joints in Interior Concrete Slabs and Floors: Type 2.

K. Joints between Plumbing Fixtures and Walls and Floors, and Between Counter tops and Walls: Type 6.

L. In STC-Rated Walls, Between Metal Stud Track/Runner and Adjacent Construction , Between Outlet Boxes and Gypsum Board: Type 7.

END OF SECTION

SECTION 08110

STANDARD STEEL DOORS

PART 1 - GENERAL

1.1 SUMMARY

A. Section includes non-rated, fire rated, and thermally insulated steel doors.

B. Related Sections:
1. Section 04065 – Masonry Mortar and Grout
2. Section 05500 – Steel Lintels
3. Section 08710 – Finish Hardware
4. Section 08800 - Glazing: Glass for doors
5. Section 09900 - Painting and Coatings: Field painting of doors.

1.2 REFERENCES

A. American National Standards Institute:
1. ANSI A250.8 - Recommended Specifications for Standard Steel Doors and Frames.

B. ASTM International:
1. ASTM A653/A653M - Standard Specification for Steel Sheet, Zinc-Coated (Galvanized) or Zinc-Iron Alloy-Coated (Galvannealed) by the Hot-Dip Process
2. ASTM C1363 - Standard Test Method for the Thermal Performance of Building Assemblies by Means of a Hot Box Apparatus
3. ASTM E413 - Standard Classification for Rating Sound Insulation.

C. Hollow Metal Manufacturers Association:
1. HMMA 810 - Hollow Metal Doors.

D. National Fire Protection Association:
1. NFPA 80 - Standard for Fire Doors, Fire Windows
2. NFPA 252 - Standard Methods of Fire Tests of Door Assemblies.

E. Steel Door Institute:
1. SDI 108 - Recommended Selection and Usage Guide for Standard Steel Doors.

F. Underwriters Laboratories Inc.:
1. UL 10B - Fire Tests of Door Assemblies.

G. Uniform Building Code:
1. UBC Standard 7-2 - Fire Tests of Door Assemblies.

1.3 SUBMITTALS

A. Section 01330 - Submittal Procedures: Requirements for submittals.

B. Shop Drawings: In addition to requirements below, provide a schedule of standard steel doors and frames using same reference numbers for details and openings as those on Drawings Schedule:
   1. Elevations of each door design
   2. Details of doors, including vertical and horizontal edge details
   3. Frame details for each frame type, including dimensioned profiles
   4. Details and locations of reinforcement and preparations for hardware
   5. Details of each different wall opening condition
   6. Details of anchorages, accessories, joints, and connections
   7. Details of glazing frames and stops showing glazing
   8. Details of conduit and preparations for electrified door hardware and controls.

C. Product Data: Submit door configurations, location of cut-outs for hardware reinforcement. Include construction details, material descriptions, core descriptions, label compliance, fire-resistance rating, and finishes for each type of steel door and frame specified.

D. Oversize Construction Certification: For standard steel door assemblies required to be fire rated and exceeding limitations of labeled assemblies; include statement that doors comply with requirements of design, materials, and construction but have not been subjected to fire test.

E. Qualification Data: For Installer.

F. Samples: Submit two samples of door face metal, 8 x 8 inch in size illustrating shop finish colors and surface texture.

G. Manufacturer's Installation Instructions: Submit special installation instructions.

H. Manufacturer's Certificate: Certify Products meet or exceed specified requirements.

I. Product Test Reports: Based on evaluation of comprehensive fire tests performed by a qualified testing agency, for each type of standard steel door and frame.

1.4 QUALITY ASSURANCE

A. Provide Steel Doors and Frames complying with the Steel Door Institute recommended specifications for Standard Steel Doors and Frames ANSI/SDI 100 (latest edition).

B. Steel Doors and Frames shall be Manufactured to high quality standards in manufacturing facilities with annual certified conformance to ISO9001.

C. Perform Work in accordance with ANSI A250.8.

D. Fire Rated Door Construction: Conform to NFPA 252 or UL 10B.

E. Installed Door Assembly: Conform to NFPA 80 for fire rated class as scheduled.

F. Maintain one copy copies of each document on site.

1.5 QUALIFICATIONS

A. Manufacturer: Company specializing in manufacturing Products specified in this section with minimum three years documented experience.

B. Installer: Company specializing in performing work of this section with minimum three years documented experience and approved by Manufacturer.

1.6 DELIVERY, STORAGE, AND HANDLING

A. Section 01600 - Product Requirements: Requirements for transporting, handling, storing, and protecting products.

B. Doors and frames must be properly marked with door opening mark number to correspond with the schedule.

C. Deliver all steel doors with corrugated edge protection and palletized to provide protection during transit and job storage.

D. Inspect doors and frames upon delivery for damage. Minor damage is to be repaired, provided the repair is equal to new work and acceptable to the architect.

E. Store doors and frames at the job site under cover. Place units on wood sills on the floor in a manner that will prevent rust and damage. Avoid the use of non-vented plastic or canvas shelters, which could create a humidity chamber. If the wrapper on the door becomes wet, remove the carton immediately. Provide a 1/4 inch space between stacked doors to promote air circulation.

F. Accept doors on site in Manufacturer's packaging. Inspect for damage.

G. Break seal on site to permit ventilation.

1.7 COORDINATION

A. Section 01300 - Administrative Requirements: Requirements for coordination.

B. Coordinate Work with door opening construction, door frame, and door hardware installation.

PART 2 - PRODUCTS

2.1 STANDARD STEEL DOORS

A. Manufacturers:
1. Ceco Door Products Model Medallion, Regent, Imperial door
2. Republic Builders Products Model DB, DS doors
3. Steelcraft Model LW18-Series
4. Substitutions: Section 01600 - Product Requirements.

B. Product Description:
   1. Exterior Doors (Insulated): ANSI A250.8, 1-3/4 inch thick.
      a. Level 2 - Heavy Duty, Model 2, seamless design.
   2. Interior Doors (Non-Rated): ANSI A250.8, 1-3/4 inch thick.
      a. Level 2 - Heavy Duty, Model 2, seamless design.
   3. Interior Doors (Fire Rated): ANSI A250.8, 1-3/4 inch thick.
      a. Level 2 - Heavy Duty, Model 2, seamless design.

2.2 COMPONENTS

A. Face: Steel sheet in accordance with by referencing ANSI A250.8 for level and model and ANSI A250.4 for physical-endurance level. Door, 18 Gage minimum steel thickness.

B. Closure reinforcement: 12 Gage Steel

C. End Channel, 16 Gage Steel end channels, inverted. Plastic fillers are NOT acceptable.

D. Exterior Door Core at Shop / Storage: Vertical steel stiffeners with insulation.

E. Exterior Door Core at Office: Thermal Insulated Door, Rigid polystyrene, chemically bonded. Total insulation R-Value of R-9

F. Interior Door Core: Cardboard honeycomb with waterproof, contact adhesive.

G. Handed door.

H. Beveled hinge and lock edges.

I. Hinge reinforcement not less than 7 gage steel.

J. Sound Rated Door: STC of 32, measured in accordance with ASTM E413.

2.3 ACCESSORIES

A. Removable Stops: Rolled steel, channel shape, mitered corners; prepared for countersink style screws. Minimum 0.032 inch thick, fabricated from same material as door face sheet in which they are installed.

B. Primer: ANSI A250.10 rust inhibitive type.

2.4 FABRICATION

A. Fabricate doors with hardware reinforcement welded in place.

B. Attach fire rating label to each fire rated door.

C. Configure exterior doors with edge profile to receive recessed weather stripping.

2.5 SHOP FINISHING

A. Steel Sheet: Galvanized to ASTM A924 A60.

B. Primer: Oven Baked.

PART 3 - EXECUTION

3.1 EXAMINATION

A. Section 01300 - Administrative Requirements: Verification of existing conditions before starting work.

B. Verify opening sizes and tolerances are acceptable.

3.2 INSTALLATION

A. Install doors in accordance with ANSI A250.8.

B. Install door louvers, plumb and level.

C. Coordinate installation of glass and glazing specified in Section 08800.

D. Coordinate installation of doors with installation of frames specified in Section 08115 and hardware specified in Section 08710.

E. Touch-up damaged shop finishes.

3.3 ERECTION TOLERANCES

A. Section 01400 - Quality Requirements: Tolerances.

B. Maximum Diagonal Distortion: 1/16 inch measured with straight edge, corner to corner.

3.4 ADJUSTING

A. Section 01700 - Execution Requirements: Requirements for adjusting.

B. Adjust door for smooth and balanced door movement.

3.5 SCHEDULE

A. Refer to Door and Frame Schedule on drawings.

END OF SECTION

SECTION 08115

STANDARD STEEL FRAMES

PART 1 - GENERAL

1.1 SUMMARY

A. Section includes fire rated and non-rated, steel frames.

B. Related Sections:
1. Section 03300 - Cast-In-Place Concrete: Placement of anchors into masonry wall construction]
2. Section 04820 – Reinforced Unit Masonry Assemblies: Masonry grout fill of metal frames and placement of anchors into masonry wall construction
3. Section 08114 - Standard Steel Doors
4. Section 08710 - Door Hardware: Hardware, silencers, and weather-stripping
5. Section 08800 - Glazing.

1.2 REFERENCES

A. American National Standards Institute:
1. ANSI A250.8 - Recommended Specifications for Standard Steel Doors and Frames.

B. ASTM International:
1. ASTM A591/A591M - Standard Specification for Steel Sheet, Electrolytic Zinc-Coated, for Light Coating Mass Applications
2. ASTM A653/A653M - Standard Specification for Steel Sheet, Zinc-Coated (Galvanized) or Zinc-Iron Alloy-Coated (Galvannealed) by the Hot-Dip Process.

C. National Fire Protection Association:
1. NFPA 80 - Standard for Fire Doors, Fire Windows
2. NFPA 252 - Standard Methods of Fire Tests of Door Assemblies.

D. Underwriters Laboratories Inc.:
1. UL 10B - Fire Tests of Door Assemblies.

E. Uniform Building Code:
1. UBC Standard 7-2 - Fire Tests of Door Assemblies.

1.3 SUBMITTALS

A. Section 01330 - Submittal Procedures: Submittal procedures.

B. Shop Drawings: Indicate frame elevations, reinforcement, anchor types and spacing, location of cut-outs for hardware, and finish.
1. Elevations of each frame design

2. Details of frame, including vertical and horizontal edge details
3. Details and locations of reinforcement and preparations for hardware
4. Details of each different wall opening condition
5. Details of anchorages, accessories, joints, and connections
6. Details of conduit and preparations for electrified door hardware and controls.

C. Product Data: Submit frame configuration and finishes. Include construction details, material descriptions, label compliance, fire-resistance rating, and finishes for each type of frame specified.

D. Samples: Submit two samples of frame, 8” x 8” inch in size illustrating factory finished frame colors and surface texture.

E. Manufacturer's Installation Instructions: Submit special installation instructions.

F. Manufacturer's Certificate: Certify products meet or exceed specified requirements.

G. Qualification Data: For Installer.

H. Product Test Reports: Based on evaluation of comprehensive fire tests performed by a qualified testing agency, for each type of standard steel door and frame.

1.4 QUALITY ASSURANCE

A. Conform to requirements of ANSI A250.8.

B. Fire Rated Frame Construction: Conform to UL 10B.

C. Installed Frame Assembly: Conform to NFPA 80 for fire rated class same as fire door.

D. Maintain one copy of each document on site.

1.5 QUALIFICATIONS

A. Manufacturer: Company specializing in manufacturing products specified in this section with minimum three years documented experience.

1.6 DELIVERY, STORAGE, AND HANDLING

A. Section 01600 - Product Requirements: Product storage and handling requirements.

B. Accept frames on site in Manufacturer's packaging. Inspect for damage.

C. Break seal on-site to permit ventilation.

1.7 COORDINATION

A. Section 01300 - Administrative Requirements: Coordination and project conditions.

B. Coordinate Work with frame opening construction, door, and hardware installation.

C. Sequence installation to accommodate required door hardware electric wire connections.

PART 2 - PRODUCTS

2.1 STANDARD STEEL FRAMES

A. Manufacturers:
1. Ceco Door Products Model
2. Republic Builders Products Model
3. Steelcraft Model
4. Substitutions: Section 01600 - Product Requirements.

B. Product Description: Standard shop fabricated steel frames, fire rated and non-rated types. To suit ANSI A250.8 Grade and Model of door specified

1. Exterior Frames:
   a. Level 2 for Door Models; Fully Welded, nominal 14 gage thick material, base metal thickness
   b. Kerfed frame with integral weather stripping
2. Interior Frames:
   a. Level 2 for Door Models; Fully Welded, nominal 14 gage inch thick material, base metal thickness.

2.2 ACCESSORIES

A. Bituminous Coating: Non-asbestos fibered asphalt emulsion.

B. Primer: ANSI A250.10 rust inhibitive type.

C. Silencers: Specified in Section 08710. Resilient rubber set in fitted into drilled hole.

D. Weather stripping: Specified in Section 08710. Resilient rubber set in steel retainer.

2.3 FABRICATION

A. Fabricate frames as fully welded unit.
1. Fabricate frames with mitered or coped and welded face corners and seamless face joints.

B. Fabricate frames with hardware reinforcement plates welded in place. Provide mortar guard boxes.

C. Reinforce frames wider than 48 inches with roll formed steel channels fitted tightly into frame head, flush with top.

D. Prepare frames for silencers. Provide three single silencers for single doors on strike side. Provide two single silencers on frame head at double doors without mullions.

E. Configure exterior frames with special profile to receive recessed weather stripping.

F. Attach fire rated label to each fire rated frame.

G. Fabricate frames to suit masonry wall coursing with 2 inch head member.

2.4 SHOP FINISHING

A. Steel Sheet: Galvanized to ASTM A653/A653M G60.

B. Primer: Baked.

C. Coat inside of frame profile with bituminous coating to minimum thickness of 1/16 inch.

PART 3 - EXECUTION

3.1 EXAMINATION

A. Section 01300 - Administrative Requirements: Coordination and project conditions.

B. Verify opening sizes and tolerances are acceptable.

3.2 INSTALLATION

A. Install frames in accordance with ANSI A250.8.

B. Coordinate with masonry and gypsum board wall construction for anchor placement.

C. Coordinate installation of glass and glazing specified in Section 08800.

D. Coordinate installation of frames with installation of hardware specified in Section 08710 and doors in Section 08110.

E. Install roll formed steel reinforcement channels between two abutting frames. Anchor to structure and floor.

3.3 ERECTION TOLERANCES

A. Section 01400 - Quality Requirements: Tolerances.

B. Maximum Diagonal Distortion: 1/16 measured with straight edges, crossed corner to corner.

3.4 SCHEDULE

A. Refer to Door and Frame Schedule on drawings.

END OF SECTION

SECTION 08212

FLUSH WOOD DOORS

PART 1 - GENERAL

1.1 SUMMARY

A. Section includes flush wood doors flush and flush glazed configuration; fire rated and non-rated.

B. Related Sections:

1. Section 06200 - Finish Carpentry: Wood door frames
2. Section 08115 - Standard Steel Frames
3. Section 08710 - Door Hardware
4. Section 08800 - Glazing
5. Section 09900 - Painting and Coatings: Site finishing of wood doors.

1.2 REFERENCES

A. American National Standards Institute:
1. ANSI A135.4 - Basic Hardboard.

B. ASTM International:
1. ASTM E413 - Standard Classification for Rating Sound Insulation.

C. Architectural Woodwork Institute:
1. AWI - Quality Standards Illustrated.

D. Hardwood Plywood and Veneer Association:
1. HPVA HP-1 - American National Standard for Hardwood and Decorative Plywood.

E. National Fire Protection Association:
1. NFPA 80 - Standard for Fire Doors, Fire Windows
2. NFPA 252 - Standard Methods of Fire Tests of Door Assemblies.

F. Underwriters Laboratories Inc.:
1. UL 10B - Fire Tests of Door Assemblies
2. UL - Building Materials Directory.

G. Uniform Building Code:
1. UBC Standard 7-2 - Fire Tests of Door Assemblies.

H. Intertek Testing Services (Warnock Hersey Listed):
1. WH - Certification Listings.

1.3 SUBMITTALS

A. Section 01330 - Submittal Procedures: Submittal procedures.

B. Shop Drawings: Illustrate door opening criteria, elevations, sizes, types, swings, undercuts required, special blocking for hardware, identify cutouts for glazing.
1. Indicate dimensions and locations of mortises and holes for hardware.
2. Indicate dimensions and locations of cutouts.
3. Indicate requirements for veneer matching.
4. Indicate doors to be factory finished and finish requirements.
5. Indicate fire ratings for fire doors.

C. Product Data: Submit information on door core materials and construction, and on veneer species, type and characteristics.

D. Samples:
1. Submit two samples of door construction, 8 x 10 inch in size cut from bottom corner of door.
2. Submit two samples of door veneer, 8 x 10 inch in size illustrating wood grain, stain color, and sheen.

E. Manufacturer's Installation Instructions: Submit special installation instructions.

1.4 QUALITY ASSURANCE

A. Perform Work in accordance with AWI Quality Standard Section 1300, Custom Grade.

B. Finish doors in accordance with AWI Quality Standard Section 1500.

C. Fire Door Construction: Conform to NFPA 252 and UL 10B.

D. Installed Fire Rated Door Assembly: Conform to NFPA 80 for fire rated class as scheduled.

E. Maintain one copy of each document on site.

1.5 QUALIFICATIONS

A. Manufacturer: Company specializing in manufacturing products specified in this section with minimum three years documented experience.

B. Installer: Company specializing in performing work of this section with minimum three years documented experience and approved by Manufacturer.

1.6 DELIVERY, STORAGE, AND HANDLING

A. Section 01600 - Product Requirements: Product storage and handling requirements.

B. Package, deliver and store doors in accordance with AWI Section 1300.

C. Protect doors with resilient packaging sealed with heat shrunk plastic. Do not store in damp or wet areas; or in areas where sunlight might bleach veneer. Seal top and bottom edges with tinted sealer when stored more than one week.
   1. Break seal on site to permit ventilation.

1.7 COORDINATION

A. Section 01300 - Administrative Requirements: Coordination and project conditions.

B. Coordinate Work with door opening construction, door frame and door hardware installation.

1.8 WARRANTY

A. Section 01700 - Execution Requirements: Product warranties and product bonds.

B. Include coverage for delamination of veneer, warping beyond specified installation tolerances, defective materials, and telegraphing core construction.

C. Furnish Manufacturer's "Life of Installation" warranty for interior doors.

D. Manufacturer's Warranty: Provide for replacing including cost of re-hanging and refinishing at no cost to Owner, wood doors exhibiting defects in materials or workmanship including warp and de-lamination for life of original installation.

PART 2 - PRODUCTS

2.1 FLUSH WOOD DOORS

A. Manufacturers:
   1. Algoma Hardwoods Inc. Model Flush Wood Door
   2. Eggers Industries Model 5-Ply Flush Doors
   3. Buell Door Company Model Hardwood Veneer Doors
   4. Industrial Mohawk Flush Doors, Inc. Mode 5-Ply
   5. Substitutions: Section 01600 - Product Requirements.

B. Product Description: Solid core flush wood doors; red oak, wood veneer facing material; fire rated and non-rated types; flush glazed design; site finished; wood doors.
   1. Flush Interior Doors: 1-3/4 inches thick; solid core, five-ply construction, fire rated as indicated on Drawings; stain grade.

2.2 COMPONENTS

A. Solid Core, Non-Rated: AWI Section 1300, Type SCL Structural Composite Lumber.

B. Solid Core, Fire Rated: AWI Section 1300, Type FD 1/3.

C. Blocking: Provide wood blocking in doors as follows:

1. 5-inch top-rail blocking, in doors indicated to have closers.
2. 5-inch bottom-rail blocking, in doors indicated to have kick, mop, or armor plates.
3. 5-inch midrail blocking, in doors indicated to have exit devices.

D. Interior Veneer Facing: AWI Custom quality wood, plain sliced, with balanced match end matched grain, for transparent finish.
   1. Wood: Red Oak As indicated in Schedule.

E. Cross Banding Behind Laminate Finish: 2-ply; Manufacturer's standard construction.

F. Facing Adhesive: Type I – waterproof or II - water resistant, Manufacturers' standard construction; formaldehyde free.

2.3 ACCESSORIES

A. Glazing Stops: Wood, of same species as door facing with Wood with metal clips for rated doors. Aluminum channel shape, mitered corners; prepared for countersink style screws.

2.4 FABRICATION

A. Fabricate non-rated doors in accordance with AWI Quality Standards requirements.

B. Fabricate fire rated doors in accordance with AWI Quality Standards and to UL requirements. Attach fire rating label to door.

C. Furnish lock blocks at lock edge and top of door for closer for hardware reinforcement.

D. Vertical Exposed Edge of Stiles: Of same species as veneer facing. Hardwood for transparent finish

E. Fit door edge trim to edge of stiles after applying veneer facing.

F. Bond edge banding to cores.

G. Factory machine doors for finish hardware in accordance with hardware requirements and dimensions. Do not machine for surface hardware. Furnish solid blocking for through bolted hardware.

H. Factory fit doors for frame opening dimensions identified on shop drawings.

I. Provide edge clearances in accordance with AWI 1300.

PART 3 - EXECUTION

3.1 EXAMINATION

A. Section 01300 - Administrative Requirements: Coordination and project conditions.

B. Verify opening sizes and tolerances are acceptable.

C. Do not install doors in frame openings that are not plumb or are out-of-tolerance for size or alignment.

3.2 INSTALLATION

A. Install fire rated and non-rated doors in accordance with AWI Quality Standard, NFPA 80, and to requirements for fire rating label by UL.

B. Trim non-rated door width by cutting equally on both jamb edges.

C. Trim door height by cutting bottom edges to maximum of 3/4 inch.
1. Trim fire door height at bottom edge only, in accordance with fire rating requirements.

D. Machine cut doors for hardware installation.

E. Coordinate installation of doors with installation of frames specified in Section 08115 and hardware specified in Section 08710.

F. Install door louvers plumb and level.

G. Coordinate installation of glass and glazing specified in Section 08800.

H. Site finish doors in accordance with Section 09900.

3.3 INSTALLATION TOLERANCES

A. Section 01400 - Quality Requirements: Tolerances.

B. Conform to AWI requirements for fit and clearance tolerances.

C. Conform to AWI Section 1300 requirements for maximum diagonal distortion.

3.4 ADJUSTING

A. Section 01700 - Execution Requirements: Testing, adjusting, and balancing.

B. Adjust door for smooth and balanced door movement.

C. Adjust closer for full closure.

3.5 SCHEDULE

A. Reference floor plans, elevations and sections for door locations and door and frame schedule and door types for door sizes, construction and features.

END OF SECTION

SECTION 08310

ACCESS DOORS AND PANELS

PART 1 - GENERAL

1.1 SUMMARY

A. Section includes fire resistive rated and non-rated access doors and panels with frames.
   1. Provide for access to controls, valves, traps, dampers, cleanouts, and similar items requiring operation behind inaccessible finished surfaces.
   2. Coordinate exact locations with various trades to assure proper placement of access doors and panels.
   3. Located at each above ceiling mechanical unit at filter location.

B. Related Sections:
   1. Section 09900 - Paints and Coatings: Field paint finish
   2. Section 15820 - Duct Accessories: Access doors in ductwork.

1.2 REFERENCES

A. National Fire Protection Association:
   1. NFPA 80 - Standard for Fire Doors, Fire Windows.

B. Underwriters Laboratories Inc.:
   1. UL - Building Materials Directory.

C. Intertek Testing Services (Warnock Hersey Listed):
   1. WH - Certification Listings.

1.3 SUBMITTALS

A. Section 01330 - Submittal Procedures: Submittal procedures.

B. Shop Drawings: Indicate exact position of access door units.

C. Product Data: Submit literature indicating sizes, types, finishes, hardware, scheduled locations, fire resistance listings, and details of adjoining Work.

D. Samples: Submit one illustrating frame configuration and anchors.

E. Manufacturer's Installation Instructions: Submit installation requirements and rough-in dimensions.

1.4 CLOSEOUT SUBMITTALS

A. Section 01700 - Execution Requirements: Closeout procedures.

B. Project Record Documents: Record actual locations of access units.

1.5 QUALITY ASSURANCE

A. Fire Resistance Ratings: Where indicated as fire rated, provide assemblies from Manufacturers listed in UL Directory or Intertek Testing Services (Warnock Hersey Listed) Directory.

1.6 QUALIFICATIONS

A. Manufacturer: Company specializing in manufacturing products specified with minimum three years documented experience.

1.7 COORDINATION

A. Coordinate Work under provisions of Section 01311 - Project Coordination.

B. Coordinate Work with work requiring controls, valves, traps, dampers, cleanouts, and similar items requiring operation being located behind finished surfaces.

PART 2 - PRODUCTS

2.1 ACCESS DOORS AND PANELS

A. Manufacturers:
1. J. L. Industries
2. Larsen's Manufacturing Company
3. Milcor LTD, Partnership.
4. Substitutions: Section 01600 - Product Requirements.

B. Flush Framed Access Doors: Frames and nominal 1 inch wide exposed flanges of 16 gage steel and door panels of 14 gage steel.

C. Gypsum Board Access Doors: Frames and nominal 1 inch wide flanges of 16 gage steel and door panels of 14 gage steel. Design flanges to be concealed by gypsum board joint finishing compound specified in Section 09260.

D. Fire Rated Access Doors: Frames and nominal 1 inch wide exposed flanges of minimum 16 gage steel and door panels of 20 gage steel. Provide self closing and latching doors with keyed lock to match cylinders specified in Section 08710. Attach label to fire rated doors for rating indicated.

E. Acoustical Tile Ceilings: Fabricated for use in acoustical tile ceilings. The steel door is recessed 5/8” to receive acoustical tile.

2.2 FABRICATION

A. Fabricate units of continuous welded construction; weld, fill, and grind joints to assure flush and square unit.

B. Wall and Ceiling Access Door and Panel Hardware:
1. Hinge: Standard continuous, 175 degree steel hinges
2. Lock: Self-latching lock. Screw driver slot for quarter turn cam lock.

C. Size Variations: Obtain acceptance of Manufacturer’s standard size units which vary slightly from sizes shown or scheduled.

2.3 SHOP FINISHING

A. Base Metal Protection: Galvanized, hot dipped finish. Prime coat units with baked on primer.

B. Finish: Two coats baked enamel, color as selected.

PART 3 - EXECUTION

3.1 EXAMINATION

A. Section 01300 - Administrative Requirements: Coordination and project conditions.

B. Verify rough openings for access doors and panels are correctly sized and located.

3.2 INSTALLATION

A. Comply with Manufacturer's written instructions for installing access doors and frames.

B. Secure frames rigidly in place, plumb and level in opening, with plane of door and panel face aligned with adjacent finished surfaces.
1. Set concealed frame type units flush with adjacent finished surfaces.

C. Position unit to provide convenient access to concealed work requiring access.

D. Install fire rated units in accordance with NFPA 80 and requirements for fire listing.

3.3 ADJUSTING AND CLEANING

A. Adjust doors and hardware after installation for proper operation.

B. Remove and replace doors and frames that are warped, bowed, or otherwise damaged.

END OF SECTION

SECTION 08333

OVERHEAD COILING DOORS

PART 1 - GENERAL

1.1 SUMMARY

A. Section includes overhead coiling door, operating hardware, manual operation.

B. Related Sections:
1. Section 05500 - Metal Fabrications: Support framing
2. Section 08710 - Door Hardware: Product Requirements for cylinder core and keys for placement by this section
3. Section 09900 - Paints and Coatings: Field paint finish.

1.2 REFERENCES

A. ASTM International:
1. ASTM A653/A653M - Standard Specification for Steel Sheet, Zinc-Coated (Galvanized) or Zinc-Iron Alloy-Coated (Galvannealed) by the Hot-Dip Process
2. ASTM A924/A924M - Standard Specification for General Requirements for Steel Sheet, Metallic-Coated by the Hot-Dip Process
3. ASTM B221 - Standard Specification for Aluminum and Aluminum-Alloy Extruded Bars, Rods, Wire, Profiles, and Tubes.

B. National Fire Protection Association:
1. NFPA 80 - Standard for Fire Doors, Fire Windows.

C. Underwriters Laboratories Inc.:
1. UL 325 - Door, Drapery, Gate, Louver, and Window Operators and Systems.
2. UL - Building Materials Directory.

D. Intertek Testing Services (Warnock Hersey Listed):
1. WH - Certification Listings.

1.3 SYSTEM DESCRIPTION

A. Manual Operation: Manual hand chain lift unit with overhead counter balance device, requiring 25 lb nominal force to operate.

1.4 DESIGN REQUIREMENTS

A. Wind Loads: Design door assembly to withstand wind/suction load of 20 psf, with maximum deflection of 1/120, and without damage to door or assembly components.
1. Design per local code requirements for wind loads.

B. Impact Test for Flying Debris: Comply with ASTM E 1996, tested according to ASTM E 1886.
   1. Level of Protection: Enhanced Protection.
   2. Wind Zone One: 120 mph, pressure test to 3/4 and 1-1/2 x design pressure (positive and negative).

C. Operation: Design door assembly, including operator, to operate for not less than 20,000 cycles.

1.5 SUBMITTALS

A. Section 01330 - Submittal Procedures: Submittal procedures.

B. Shop Drawings: Indicate pertinent dimensioning, anchorage methods, hardware locations, and installation details.
   1. Summary of forces and loads on walls and jambs.

C. Product Data: Submit general construction, component connections and details.

D. Samples: Submit two door slats, 12 x 12 inch in size illustrating shape, color and finish texture.

E. Manufacturer's Installation Instructions: Indicate installation sequence and procedures, and adjustment and alignment procedures.

F. Qualification Data: For Installer.

1.6 CLOSEOUT SUBMITTALS

A. Section 01700 - Execution Requirements: Closeout procedures.

B. Operation and Maintenance Data: Submit lubrication requirements and frequency, and periodic adjustments required.

1.7 QUALITY ASSURANCE

A. Manufacturer: Rolling doors shall be manufactured by a firm with a minimum of five years experience in the fabrication and installation of rolling doors.

B. Installer: Company specializing in performing Work of this section with minimum five years documented experience, trained and approved by manufacturer.

C. Single Source Responsibility: Provide doors, guides, motors, and relate primary components form one manufacturer for each type of door.

D. Pre-Installation Conference: Schedule and convene a pre-installation conference prior to commencement of installation. Establish procedures to maintain optimum working conditions and to coordinate this work with related and adjacent work.

1.8 DELIVERY, STORAGE, AND HANDLING

A. Section 01600 - Product Requirements: Product storage and handling requirements.

1.9 WARRANTY

A. Manufacturers' Standard warranty.

PART 2 - PRODUCTS

2.1 OVERHEAD COILING DOORS

A. Manufacturers:
1. Alpine Overhead Doors, Inc., Model Redi-Storm IMB
2. Cookson Co. Model Type JCWI
3. Cornell Iron Works, Inc. Model ESD20
4. Overhead Door Corporation, Model StormTite 625 Series
5. Raynor Garage Door Model DuraCoil Standard
6. Winsor Door Model SFWI
7. Substitutions: Section 01600 - Product Requirements.

B. Product Description:
1. Manual Operation: Manual hand chain lift unit with overhead counter balance device, requiring 25 lb nominal force to operate.

2.2 COMPONENTS

A. Curtain: Conform to following; scheduled indicated on Drawings:

1. Steel Slats: Interlocking, minimum 20 gage of ASTM A653/A653M steel, minimum galvanized coating designation G90 in accordance with ASTM A924/A924M;.
   a. Type: Flat profile type slat
   b. Sandwich slat construction with manufacturer's CFC-Free foamed-in-place, polyurethane insulation core.
2. Nominal Slat Size: 3 inches wide by required length.
3. Slat Ends: Each slat fitted with end locks to act as wearing surface in guides and to prevent lateral movement.
4. Curtain Bottom: Fitted with galvanized steel angles, channels, or tubes to provide reinforcement and positive contact with floor in closed position.
   a. Astragal: Provide a replaceable, adjustable, continuous, compressible gasket of flexible vinyl, rubber, or neoprene
   b. Locking mechanism.

B. Guides: Minimum 3/16 inch; galvanized steel conforming to ASTM A653/A653M, minimum galvanized coating designation G90 in accordance with ASTM A924/A924M.
1. Furnish continuous angles of profile to retain door in place; mounting brackets of same metal.

C. Roller Shaft Counterbalance: Steel pipe and helical steel spring system, capable of producing torque sufficient to ensure smooth operation of curtain from any position and capable of holding position at mid-travel; with adjustable spring tension.
   1. Standard 100,000 cycle life design
   2. Barrel or pipe; The barrel shall be designed to limit the maximum deflection to .03" per foot of opening width
   3. The springs shall be adjusted by means of an exterior wheel.

D. Hood Enclosure: Round shape, minimum 22 gage galvanized steel; internally reinforced to maintain rigidity and shape. The hood shall contain a waterproof baffle to control air infiltration.

E. Brackets: Manufacturer's standard design, either cast-iron or cold-rolled steel plate bolted to guides for mounting curtain and barrel assembly

F. Hardware:
   1. Locks: Furnish locks to allow doors to be secured.
      a. Manual Doors: Manufacturer's standard cylinder dead lock on inside at door jamb, key operated from exterior and interior.
   2. Cylinders: Minimum six pin cylinders, Furnished under Section 08710 - Door Hardware, installed as part of Work of this section; doors keyed alike.
   3. Handle: Inside side mounted, adjustable keeper, spring activated latch bar with feature to keep in locked or retracted position; interior handle. Hardware: Manufacturer's standard push/pull handles for push-up-operated or emergency operated doors and locking device.

G. Weatherstripping (Exterior Assemblies): Moisture and rot proof, resilient type for complete weathertight installation.
   1. Weatherseals: Replaceable, adjustable, continuous, compressible weather-stripping gaskets fitted to bottom, jambs, and top, and continuous sheet in hood of exterior doors.

H. Thermoset Finish for Steel and Galvanized Steel: Apply Manufacturer's standard baked finish consisting of primer and thermosetting topcoat according to coating Manufacturer's written instructions for cleaning, pretreatment, application, thermosetting, and minimum dry film thickness.
   1. Color to be selected from Manufacturers' standard colors, or color matched to Architect selected color.

I. Chain-Hoist Operator: Provide manual chain-hoist operator consisting of endless steel hand chain, chain pocket wheel and guard, and gear-reduction unit with a maximum 25-lbf effort for door operation. Provide alloy steel hand chain with chain holder secured to operator guide

J. Locking Mechanisms: The chain shall be secured

K. Vision Lites: (3" x 5/8") uniformly spaced opening with double Plexiglas® covers.

2.3 SHOP FINISHING

A. Finish: Comply with NAAMM's "Metal Finishes Manual for Architectural and Metal Products" for recommendations for applying and designating finishes.
   1. Surface Preparation: Clean galvanized surfaces with nonpetroleum solvent so surfaces are free of oil and other contaminants.
      a. Pretreat zinc-coated steel, after cleaning, with a conversion coating of type suited to organic coating applied over it.
   2. Apply Manufacturer's standard primer and powder-coat finish to interior- and exterior-door faces and Steel Guides Hood Enclosure after forming, according to coating Manufacturer's written instructions for application, thermosetting, and minimum dry film thickness.
      a. Color and Gloss: As selected by Architect from Manufacturer's full range.

PART 3 - EXECUTION

3.1 EXAMINATION

A. Section 01300 - Administrative Requirements: Coordination and project conditions.

B. Verify opening sizes, tolerances and conditions are acceptable. Take field dimensions and examine conditions of substrates, supports, and other conditions under which this work is to be performed. Do not proceed with work until unsatisfactory conditions are corrected.

3.2 INSTALLATION

A. Installation: Install door and operating equipment complete with necessary hardware, jamb and head mold strips, anchors, inserts, hangers, and equipment supports according to Shop Drawings and Manufacturer's written instructions. Coordinate installation with adjacent work to ensure proper clearances and allow for maintenance.

B. Use anchorage devices to securely fasten assembly to wall construction and building framing without distortion or stress.

C. Securely and rigidly brace components suspended from structure. Secure guides to structural members only.

D. Fit and align assembly including hardware; level and plumb, to provide smooth operation.

E. Coordinate installation of sealants and backing materials at frame perimeter as specified in Section 07900.

F. Install perimeter trim and closures.

G. Instruct Owner’s personnel in proper operating procedures and maintenance schedule.

3.3 ERECTION TOLERANCES

A. Section 01400 - Quality Requirements: Tolerances.

B. Maintain dimensional tolerances and alignment with adjacent Work.

C. Maximum Variation From Plumb: 1/16 inch.

D. Maximum Variation From Level: 1/16 inch.

E. Longitudinal or Diagonal Warp: Plus or minus 1/8 inch per 10 ft straight edge.

3.4 ADJUSTING

A. Section 01700 - Execution Requirements: Testing, adjusting, and balancing.

B. Adjust door, hardware and operating assemblies for smooth and noiseless operation.

3.5 CLEANING

A. Section 01700 - Execution Requirements: Final cleaning.

B. Clean door and components.

C. Remove labels and visible markings. Touch-up damaged coatings and finishes and repair minor damage. Clean exposed surfaces using non-abrasive materials and methods recommended by Manufacturer of material or product being cleaned.

END OF SECTION

SECTION 08410

ALUMINUM STOREFRONTS

PART 1 - GENERAL

1.1 SUMMARY

A. Section includes aluminum-framed storefronts including aluminum frames, glass doors including hardware, and glass.

B. Related Sections:
1. Section 07900 - Joint Sealers: System perimeter sealant and back-up materials
2. Section 08800 - Glazing.

1.2 REFERENCES

A. Aluminum Association:
1. AA DAF-45 - Designation System for Aluminum Finishes.

B. American Architectural Manufacturers Association:
1. AAMA 501 - Methods of Test for Exterior Walls
2. AAMA 611 - Voluntary Specification for Anodized Architectural Aluminum
3. AAMA 1503 - Voluntary Test Method for Thermal Transmittance and Condensation Resistance of Windows, Doors and Glazed Wall Sections
4. AAMA 2605 - Voluntary Specification, Performance Requirements and Test Procedures for Superior Performing Organic Coatings on Aluminum Extrusions and Panels
5. AAMA CW-10 - Care and Handling of Architectural Aluminum from Shop to Site
6. AAMA SFM-1 - Aluminum Store Front and Entrance Manual.

C. American Society of Civil Engineers:
1. ASCE 7 - Minimum Design Loads for Buildings and Other Structures.

D. ASTM International:
1. ASTM A36/A36M - Standard Specification for Carbon Structural Steel
2. ASTM A123/A123M - Standard Specification for Zinc (Hot-Dip Galvanized) Coatings on Iron and Steel Products
3. ASTM A653/A653M - Standard Specification for Steel Sheet, Zinc-Coated (Galvanized) or Zinc-Iron Alloy-Coated (Galvannealed) by the Hot-Dip Process
4. ASTM B209 - Standard Specification for Aluminum and Aluminum-Alloy Sheet and Plate
5. ASTM B221 - Standard Specification for Aluminum and Aluminum-Alloy Extruded Bars, Rods, Wire, Profiles, and Tubes
6. ASTM E283 - Standard Test Method for Determining the Rate of Air Leakage Through Exterior Windows, Curtain Walls, and Doors Under Specified Pressure Differences Across the Specimen

7. ASTM E330 - Standard Test Method for Structural Performance of Exterior Windows, Curtain Walls, and Doors By Uniform Static Air Pressure Difference
8. ASTM E331 - Standard Test Method for Water Penetration of Exterior Windows, Curtain Walls, and Doors By Uniform Static Air Pressure Difference
9. ASTM E547 - Standard Test Method for Water Penetration of Exterior Windows, Curtain Walls, and Doors by Cyclic Static Air Pressure Differential.

E. National Fenestration Rating Council Incorporated:
1. NFRC 100 - Procedures for Determining Fenestration Product U-Factors.

F. SSPC: The Society for Protective Coatings:
1. SSPC Paint 20 - Zinc-Rich Primers (Type I - Inorganic and Type II - Organic)
2. SSPC Paint 25 - Red Iron Oxide, Zinc Oxide, Raw Linseed Oil, and Alkyd Primer.

1.3 SYSTEM DESCRIPTION

A. Aluminum-framed storefront system includes tubular aluminum sections with supplementary internal support framing, aluminum and glass entrances, shop fabricated, factory finished, glass and glazing, related flashings, anchorage and attachment devices.

B. System Assembly: Site assembled.

1.4 PERFORMANCE REQUIREMENTS

A. System Design: Design and size components to withstand dead and live loads caused by positive and negative wind pressure acting normal to plane of wall, including building corners.
1. As calculated in accordance with applicable code, as measured in accordance with ASTM E330.

B. Deflection: Limit mullion deflection to 1/175 for spans under 13’-6” and 1/240 plus 1/4 inch for spans over 13’-6”, flexure limit of glass; with full recovery of glazing materials.

C. System Assembly: Accommodate without damage to components or deterioration of seals, movement within system, movement between system and peripheral construction, dynamic loading and release of loads, deflection of structural support framing.

D. Air Infiltration: Limit air leakage through assembly to 0.06 cfm/min/sq ft of wall area, measured at reference differential pressure across assembly of 6.24 psf as measured in accordance with ASTM E283.

E. Air and Vapor Seal: Maintain continuous air barrier and vapor retarder throughout assembly, primarily in line with inside pane of glass and heel bead of glazing compound.

F. Water Resistance Test: Test unit in accordance with ASTM E 331.

G. Vapor Seal: Limit vapor seal with interior atmospheric pressure of 1 inch sp, 72 degrees F , 40 Percent RH without seal failure.

H. Thermal Transmittance of Assembly (Excluding Entrances): Maximum U Value of 0.69 Btu/sq ft per hour per deg F when measured in accordance with [AAMA 1503] [NFRC 100].

I. Expansion / Contraction: Provide for expansion and contraction within system components caused by cycling temperature range of 170 degrees F over 12 hour period without causing detrimental effect to system components and anchorage.

J. System Internal Drainage: Drain water entering joints, condensation occurring in glazing channels, or migrating moisture occurring within system, to exterior by weep drainage network.

1.5 SUBMITTALS

A. Section 01330 - Submittal Procedures: Submittal procedures.

B. Shop Drawings: Indicate system dimensions, framed opening requirements and tolerances, affected related Work and expansion and contraction joint location and details.
   1. For entrances, include hardware schedule and indicate operating hardware types, functions, quantities, and locations.

C. Product Data: Submit component dimensions, describe components within assembly, anchorage and fasteners, glass, door hardware, and internal drainage details.

D. Samples: Submit two samples 12 x 12 inches in size illustrating finished aluminum surface, glass units, and glazing materials.

E. Design Data: Indicate framing member structural and physical characteristics, calculations, dimensional limitations.

F. Manufacturer's Certificate: Certify products meet or exceed specified requirements.

G. Qualification Data: For Installer.

1.6 QUALITY ASSURANCE

A. Perform Work in accordance with AAMA SFM-1 and AAMA MCWM-1 - Metal Curtain Wall, Window, Store Front and Entrance - Guide Specifications Manual.

B. Field Measurements: Verify actual locations of structural supports for aluminum-framed systems by field measurements before fabrication and indicate measurements on Shop Drawings.
   1. Established Dimensions: Where field measurements cannot be made without delaying the Work, establish dimensions and proceed with fabricating aluminum-

framed systems without field measurements. Coordinate construction to ensure that actual dimensions correspond to established dimensions.

C. Maintain one copy copies of each document on site.

1.7 QUALIFICATIONS

A. Manufacturer and Installer: Company specializing in manufacturing aluminum glazing systems with minimum three years documented experience, and with service facilities within 100 miles of Project.

B. Design structural support framing components under direct supervision of Professional Engineer experienced in design of this Work and licensed in State of Texas.

1.8 PRE-INSTALLATION MEETINGS

A. Section 01300 - Administrative Requirements: Pre-installation meeting.

B. Convene minimum two weeks prior to commencing work of this section.

1.9 DELIVERY, STORAGE, AND PROTECTION

A. Section 01600 - Product Requirements: Product storage and handling requirements.

B. Deliver material in Manufacturer's packaging complete with installation instructions.

C. Handle, store and protect pre-finished aluminum components under provisions of Section 01620 and as recommended by Manufacturer.

D. Handle Products of this section in accordance with AAMA MCWM-1 - Curtain Wall Manual #10.

E. Protect finished aluminum surfaces with wrapping. Do not use adhesive papers or sprayed coatings which bond when exposed to sunlight or weather.

1.10 ENVIRONMENTAL REQUIREMENTS

A. Section 01600 - Product Requirements.

B. Do not install sealants or glazing materials when ambient temperature is less than 40 degrees F during and 48 hours after installation.

1.11 COORDINATION

A. Section 01300 - Administrative Requirements: Coordination and project conditions.

B. Coordinate the Work with installation of stud framing work, masonry, glazing and sealant components or materials.

1.12 WARRANTY

A. Section 01700 - Execution Requirements: Product warranties and product bonds.

B. Special Finish Warranty: Manufacturer's standard form in which Manufacturer agrees to repair or replace components on which finishes fail within specified warranty period. Warranty does not include normal weathering.
1. Warranty Period: 10 years from date of Substantial Completion

C. Furnish five year Manufacturer warranty for glazed units.

PART 2 - PRODUCTS

2.1 ALUMINUM-FRAMED STOREFRONTS

A. Manufacturers:
1. EFCO Corp. Model System 402
2. Kawneer Co., Inc. Model Trifab 450 – 2" sightline
3. Traco Model TR-7850N
4. Vistawall Architectural Products Model Series 3000 – 2" x 4 ½" mullion profile
5. Substitutions: Section 01600 - Product Requirements.

B. Product Description:
1. Aluminum Frame: Non-thermally broken; flush glazing stops; drainage holes; internal weep drainage system.
a. Depth of frame shall not be less than 4 ½"
b. Face dimension shall not be less than 2"
c. Frame components shall be shear block construction.
2. Glazing: Units shall be dry glazed with EPDM gasket on both exterior and interior.
3. Mullions: Profile of extruded aluminum with internal reinforcement of aluminum or shaped steel structural section.
4. Doors: Aluminum framed glass doors; 1-3/4 inches thick, nominal 3 inch wide top rail and vertical stiles, nominal 4 inch wide bottom rail; beveled glazing stops.

2.2 COMPONENTS

A. Extruded Aluminum: ASTM B221; 6063 alloy, T5 temper typical, or T6 temper for extruded structural members.

B. Steel Sections: ASTM A36/A36M; shaped to suit mullion sections, galvanized to G90.

C. Glass: Specified in Section 08800.

D. Glazing Materials: Storefront Manufacturer's standard types to suit application and to achieve weather, moisture, and air infiltration requirements.

E. Hardware: Furnish Manufacturer's standard door hardware for types of doors and applications indicated, and as specified below.
   1. Weather Stripping, Sill Sweep Strips, Pull, Panic Bar, Closer, Deadlock, Weather-Stripping, and Hinges: Manufacturers standard type to suit application.

F. Flashings: Minimum 0.032 inch thick aluminum to match mullion sections where exposed.

G. Firestopping: Specified in Section 07840.

H. Vapor Retarder: Sheet EPDM.

I. Air Barrier: Sheet steel, galvanized.

J. Sealant and Backing Materials:
   1. Sealant Used Within System (Not Used for Glazing): Manufacturer's standard materials to achieve weather, moisture, and air infiltration requirements.
   2. Perimeter Sealant: Specified in Section 07900.

K. Fasteners: Stainless steel, type recommended by Manufacturer to suit application. Exposed fasteners will not be acceptable.

2.3 FABRICATION

A. Fabricate components with minimum clearances and shim spacing around perimeter of assembly, yet enabling installation and dynamic movement of perimeter seal.

B. Accurately fit and secure joints and corners. Make joints flush, hairline, and weatherproof.

C. Prepare components to receive anchor devices. Fabricate anchors.

D. Arrange fasteners and attachments to conceal from view.

E. Prepare components with internal reinforcement for door hardware.

F. Reinforce framing members for imposed loads.

2.4 SHOP FINISHING

A. Clear Anodized Aluminum Surfaces: AAMA 611, AA-M12C22A41 non-specular as fabricated mechanical finish, medium matte chemical finish, and Architectural Class I 0.7 mils clear anodized coating.

B. Concealed Steel Items: Galvanized in accordance with ASTM A123/A123M to thickness Grade 85, 2.0 oz/sq ft.

C. Apply bituminous paint to concealed aluminum and steel surfaces in contact with cementitious or dissimilar metals.

D. Touch-Up Primer for Galvanized Steel Surfaces: SSPC Paint 20 zinc rich.

E. Extent of Finish:
1. Apply factory coating to surfaces exposed at completed assemblies.
2. Apply finish to surfaces cut during fabrication so no natural aluminum is visible in completed assemblies, including joint edges.
3. Apply touch-up materials recommended by coating Manufacturer for field application to cut ends and minor damage to factory applied finish.

PART 3 - EXECUTION

3.1 EXAMINATION

A. Section 01300 - Administrative Requirements: Coordination and project conditions.

B. Verify dimensions, tolerances, and method of attachment with other Work.

C. Verify wall openings and adjoining air and vapor seal materials are ready to receive Work of this Section.

3.2 INSTALLATION

A. Install wall system in accordance with AAMA MCWM-1 - Store Front and Entrance - Guide Specifications Manual.

B. Install wall system in accordance with Manufacturer's recommendations. Ensure assemblies are plumb, level and free of warp or twist. Maintain dimensional tolerances and alignment with adjacent work.

C. Attach to structure to permit sufficient adjustment to accommodate construction tolerances and other irregularities.

D. Provide alignment attachments, anchorage and shims to permanently fasten system to building structure.

E. Align assembly plumb and level, free of warp or twist. Maintain assembly dimensional tolerances, aligning with adjacent Work.

F. Provide thermal isolation where components penetrate or disrupt building insulation.

G. Install sill flashings. Turn up ends and edges; seal to adjacent Work to form water tight dam.

H. Coordinate attachment and seal of perimeter air and vapor barrier materials.

I. Pack fibrous insulation in shim spaces at perimeter of assembly to maintain continuity of thermal barrier.

J. Install integral flashings and integral joint sealers.

K. Set thresholds in full bed of adhesive and secure.

L. Install hardware using templates provided. Refer to Section 08710 for installation requirements.

M. Coordinate installation of glass with Section 08800; separate glass from metal surfaces.

N. Coordinate installation of perimeter sealants with Section 07900.

3.3 ERECTION TOLERANCES

A. Section 01400 - Quality Requirements: Tolerances.

B. Maximum Variation from Plumb: 0.06 inches every 3 ft non-cumulative or 1/16 inches per 10 ft, whichever is less.

C. Maximum Misalignment of Two Adjoining Members Abutting in Plane: 1/32 inch.

3.4 ADJUSTING

A. Section 01700 - Execution Requirements: Testing, adjusting and balancing.

B. Adjust operating hardware for smooth operation.

3.5 CLEANING

A. Section 01700 - Execution Requirements: Final cleaning.

B. Remove protective material from pre-finished aluminum surfaces.

C. Wash down surfaces with solution of mild detergent in warm water, applied with soft, clean wiping cloths. Take care to remove dirt from corners. Wipe surfaces clean.

D. Remove excess sealant by method acceptable to sealant Manufacturer.

3.6 PROTECTION OF INSTALLED CONSTRUCTION

A. Section 01700 - Execution Requirements: Protecting installed construction.

B. Protect finished Work from damage.

END OF SECTION

SECTION 08520

ALUMINUM WINDOWS

PART 1 - GENERAL

1.1 SUMMARY

A. Section includes extruded aluminum windows with fixed and operating sash, factory glazed, operating hardware and, insect screens.

B. Related Sections:
1. Section 05500 - Metal Fabrications: Steel lintels
2. Section 06114 - Wood Blocking and Curbing: Wood perimeter shims
3. Section 07260 - Vapor Retarders: Perimeter vapor seal between window frame and adjacent construction
4. Section 07270 - Air Barriers: Perimeter air seal between window frame and adjacent construction
5. Section 07900 - Joint Sealers: Perimeter sealant and back-up materials
6. Section 08800 - Glazing.

1.2 REFERENCES

A. Aluminum Association:
1. AA DAF-45 - Designation System for Aluminum Finishes.

B. American Architectural Manufacturers Association:
1. AAMA 101 - Voluntary Specifications for Aluminum, Vinyl (PVC) and Wood Windows and Glass Doors
2. AAMA 611 - Voluntary Specification for Anodized Architectural Aluminum
3. AAMA 1503 - Voluntary Test Method for Thermal Transmittance and Condensation Resistance of Windows, Doors and Glazed Wall Sections.

C. American National Standards Institute:
1. ANSI Z97.1 - Safety Glazing Materials Used in Buildings Safety.

D. American Society of Civil Engineers:
1. ASCE 7 - Minimum Design Loads for Buildings and Other Structures.

E. ASTM International:
1. ASTM A123/A123M - Standard Specification for Zinc (Hot-Dip Galvanized) Coatings on Iron and Steel Products
2. ASTM B209 - Standard Specification for Aluminum and Aluminum-Alloy Sheet and Plate
3. ASTM B221 - Standard Specification for Aluminum and Aluminum-Alloy Extruded Bars, Rods, Wire, Profiles, and Tubes
4. ASTM D3656 - Standard Specification for Insect Screening and Louver Cloth Woven from Vinyl-Coated Glass Yarns

5. ASTM E283 - Standard Test Method for Determining the Rate of Air Leakage Through Exterior Windows, Curtain Walls, and Doors Under Specified Pressure Differences Across the Specimen
6. ASTM E330 - Standard Test Method for Structural Performance of Exterior Windows, Curtain Walls, and Doors By Uniform Static Air Pressure Difference
7. ASTM E331 - Standard Test Method for Water Penetration of Exterior Windows, Curtain Walls, and Doors By Uniform Static Air Pressure Difference
8. ASTM E547 - Standard Test Method for Water Penetration of Exterior Windows, Curtain Walls, and Doors by Cyclic Static Air Pressure Differential
9. ASTM E1105 - Standard Test Method for Field Determination of Water Penetration of Installed Exterior Windows, Curtain Walls, and Doors by Uniform or Cyclic Static Air Pressure Difference
10. ASTM F588 - Standard Test Methods for Resistance of Window Assemblies to Forced Entry Excluding Glazing.

F. Glass Association of North America:
1. GANA - Glazing Manual.

G. National Fenestration Rating Council Incorporated:
1. NFRC 100 - Procedures for Determining Fenestration Product U-Factors.

H. SSPC: The Society for Protective Coatings:
1. SSPC Paint 20 - Zinc-Rich Primers (Type I - Inorganic and Type II - Organic)
2. SSPC Paint 25 - Red Iron Oxide, Zinc Oxide, Raw Linseed Oil, and Alkyd Primer.

1.3 SYSTEM DESCRIPTION

A. Windows: Extruded aluminum sections, factory fabricated, factory finished, factory glazed vision glass, related flashings, anchorage and attachment devices.

B. Configuration: Conform to AAMA 101 Designations for windows required for Project; single hung; bottom sash side loads for removal, bevel sash and fixed glazing perimeter.

C. Glazing: Exterior type; 1” inch thick insulating unit tinted glass.

D. Forced Entry Resistance: Conform to ASTM F588 Type A.

1.4 PERFORMANCE REQUIREMENTS

A. Primary Performance Requirements: Aluminum windows to meet performance criteria for AAMA 101 Designation HC40 Heavy Commercial or better.

B. Deflection: Limit member deflection to 1/175 of longer dimension with full recovery of glazing materials. Test shall be conducted pursuant with ASTM E 330.

C. Assembly: To accommodate, without damage to components or deterioration of seals, movement between window and perimeter framing, deflection of lintel.

D. Thermal Transmittance of Assembly: Maximum U Value of .50 Btu/sq ft per hour per deg F when measured in accordance with AAMA 1503.

E. Air Infiltration: Limit air infiltration through assembly to 0.1 cfm/min/sq ft of wall area, measured at reference differential pressure across assembly of 6.24 psf as measured in accordance with ASTM E283.

F. Water Leakage: None, when measured in accordance with ASTM E331 and ASTM E547 at a static air pressure difference of 15 psf.

G. System Internal Drainage: Drain water entering joints, condensation occurring in glazing channels, and migrating moisture occurring within system, to exterior by weep drainage network.

H. Air and Vapor Seal: Maintain continuous air barrier and vapor retarder throughout assembly, primarily in line with pane of glass and heel bead of glazing compound. Position thermal insulation on exterior surface of air barrier and vapor retarder.

1.5 SUBMITTALS

A. Section 01330 - Submittal Procedures: Submittal procedures.

B. Shop Drawings: Indicate opening dimensions, framed opening tolerances, affected related Work, details of assemblies, hardware, glazing details and installation requirements.

C. Product Data: Submit component dimensions, anchorage and fasteners, glass, internal drainage, and typical details.
   1. For installed products to comply with design loads, include structural analysis data prepared by or under the supervision of a qualified professional engineer detailing fabrication and assembly of aluminum windows and used to determine the following:
      a. Structural test pressures and design pressures for wind loads per local code requirements.
   2. Operating instructions for each type of aluminum window.

D. Samples: Submit two 12 x 12 inches in size illustrating window frame section, factory finished aluminum surfaces, glass units. Submit two samples of operating hardware.

E. Qualification Data: For Installer and Manufacturer.

F. Maintenance Data: For operable window sash, operating hardware, weather stripping and finishes to be included in maintenance manuals.

G. Manufacturer's Certificates: Certify Product performance ratings by independent third party such as AAMA, CAWM, or NFRC as meeting or exceeding specified requirements.

1.6 QUALITY ASSURANCE

A. Perform Work in accordance with the following:
   1. Aluminum Windows: Fabricate window assemblies in accordance with AAMA 101 for types of windows required.
   2. Insulated Glass: Fabricate insulated glass units in accordance with GANA (formerly FGMA) Glazing Manual.
   3. Maintain one copy of each document on site.

1.7 QUALIFICATIONS

A. Manufacturer: Company specializing in manufacturing commercial aluminum windows with minimum three years documented experience.

B. Installer: Company specializing in installation of commercial aluminum windows with minimum three years documented experience and with service facilities within 100 miles of Project.

1.8 PRE-INSTALLATION MEETINGS

A. Section 01300 - Administrative Requirements: Pre-installation meeting.

B. Convene minimum two weeks prior to commencing work of this section.

1.9 DELIVERY, STORAGE, AND PROTECTION

A. Section 01600 - Product Requirements: Product storage and handling requirements.

B. Handle Work of this section in accordance with AAMA CW-10-97.

C. Store and handle windows, hardware and all items in strict compliance with the Manufacturer’s instructions.

D. Protect factory finished aluminum surfaces. Do not use adhesive papers or sprayed coatings that bond when exposed to sunlight or weather.

1.10 ENVIRONMENTAL REQUIREMENTS

A. Section 01600 - Product Requirements.

B. Do not install glazing materials when ambient temperature is less than 40 degrees F.

C. Maintain this minimum temperature during and after installation of glazing materials.

D. Field Measurements: Verify aluminum window openings by field measurements before fabrication and indicate measurements on Shop Drawings.
   1. Established Dimensions: Where field measurements cannot be made without delaying the Work, establish opening dimensions and proceed with fabricating

aluminum windows without field measurements. Coordinate wall construction to ensure that actual opening dimensions correspond to established dimensions.

1.11 WARRANTY

A. Section 01700 - Execution Requirements: Product warranties and product bonds.

B. Warranty Period:
1. Window: Three years from date of Substantial Completion.
2. Glazing: Five years from date of Substantial Completion.
a. Seal failure, interpane dusting or misting, and replacement of same.
3. Metal Finish: Five years from date of Substantial Completion.

PART 2 - PRODUCTS

2.1 ALUMINUM WINDOWS

A. Manufacturers:
1. All Seasons Commercial, Model 2665 Single Hung
2. EFCO Corp.
3. Kawneer Co., Inc.
4. Traco Model
5. Substitutions: Section 01600 - Product Requirements.

B. Product Description: Aluminum windows thermally broken with interior portion of frame insulated from exterior portion; flush glass stops of screw fastened type.
1. Reinforced Mullion: Extruded aluminum with integral reinforcement of aluminum structural section.

2.2 COMPONENTS

A. Extruded Aluminum: Material Standard: ASTM B221, G.S. 10A-T5; 6063-T5 alloy and temper.

B. Frame Depth: Not less than 4".

C. Member Wall Thickness: Each master frame member shall have minimum wall thickness of 0.080" and shall provide structural strength to meet specified performance requirements. Each sash member shall have a minimum wall thickness of 0.080". All horizontal sash members shall be tubular construction. Meeting rail shall have a continuous interlock with double weather stripping.

D. Dimensions: Reference to dimensions for wall thickness and other cross-sectional dimensions of window members are nominal and in compliance with ANSI H35.2-1990.

E. Mullions and Cover Plates: Shall be extruded aluminum of 6063-T5 alloy and temper of profile and dimensions indicated on drawings. Mullions shall provide structural properties to resist wind pressure required by performance criteria and standards.

F. Thermal Barrier.
1. Frame thermal barrier shall be a minimum of 5/16” separation consisting of a two-part, chemically curing high density polyurethane which is mechanically and adhesively bonded to the aluminum.
2. Sash thermal barrier shall be a minimum of 1/4” separation consisting of a two-part, chemically curing high density polyurethane in conditioned thermal pockets which is mechanically and adhesively bonded to the aluminum.

G. Balances: block and tackle Class 5 heavy duty spring with larger frame jamb extrusions conforming to AAMA 902 and of appropriate capacity to hold sash stationary and permit smooth operation

H. Steel Sections: Profiled to suit mullion sections.

I. Insulating Glass: Sealed double pane units conforming to requirements in Section 08800 - Glazing.
1. Outer Pane: Green-Blue tinted Low E float glass
2. Inner Pane: Clear float glass
3. Pane Thickness: Minimum 1/4 inch thick. Determined by size or wind and suction loads
4. Minimum Total Unit Thickness: 1 inch
5. Glazing Materials: Manufacturer’s standard conforming with requirements specified in Section 08800 - Glazing.

J. Hardware:
1. Sash lock: Lever handle with cam lock.

K. Sills: Extruded aluminum; sloped for positive wash; fit under sash beyond wall face; one piece full width of opening jamb angles to terminate sill end.

L. Sub-Sills: Extruded aluminum; sloped for positive wash; fit under sash to Project beyond wall face; one piece full width of opening.

M. Operable Sash Weather Stripping: Resilient plastic; permanently resilient, profiled to effect weather seal.

N. Insect Screen Frame: Extruded aluminum frame of rectangular sections; fit with adjustable hardware; nominal size similar to operable glazed unit.

O. Insect Screens: Shall be aluminum, natural color to match frame.

P. Receptor system: head and jamb – two piece snap together receptor system.

2.3 ACCESSORIES

A. Fasteners and Anchors: Stainless steel.

B. Bituminous Paint: Fibered asphaltic type.

C. Limit Stops: Resilient rubber.

2.4 FABRICATION

A. Fabricate components with minimum clearances and shim spacing around perimeter of assembly, yet enabling installation and dynamic movement of perimeter seal.

B. Accurately fit and secure joints and corners. Make joints flush, hairline, and weatherproof.

C. Prepare components to receive anchor devices. Fabricate anchors.

D. Arrange fasteners and attachments to ensure concealment from view.

E. Prepare components with internal reinforcement for operating hardware.

F. Furnish internal reinforcement in mullions with galvanized steel members to maintain rigidity.

G. Permit internal drainage weep holes and channels to migrate moisture to exterior. Furnish internal drainage of glazing spaces to exterior through weep holes.

H. Assemble insect screen frame, miter and reinforce frame corners. Fit mesh taut into frame and secure. Fit frame with four spring loaded stainless steel pin retainers.

I. Double weatherstrip operable units.

J. Factory glaze window units. Install glass in accordance with Section 08800, to glazing method required to achieve performance criteria.

2.5 SHOP FINISHING

A. Finish Coatings: Conform to AAMA 611.

B. Clear Anodized Aluminum Surfaces: AA-M12C22A41 non-specular as fabricated mechanical finish, medium matte chemical finish, and Architectural Class I 0.7 mils clear anodized coating.

C. Locks, Operators, and Exposed Hardware: Baked Enameled to color as selected by Architect.

D. Pull Handles: Baked enamel color as selected by Architect.

E. Screens: Natural aluminum color.

F. Apply coat of bituminous paint on concealed aluminum surfaces in contact with cementitious or dissimilar materials.

G. Concealed Steel Items: Galvanized in accordance with ASTM A123/A123M to thickness Grade 85, 2.0 oz/sq ft.

PART 3 - EXECUTION

3.1 EXAMINATION

A. Section 01300 - Administrative Requirements: Coordination and project conditions.

B. Verify wall openings and adjoining air and vapor seal materials are ready to receive Work of this section.

3.2 INSTALLATION

A. Install windows in accordance with Manufacturer's recommendations and shop drawings with skilled craftspeople.

B. Attach window frame and shims to perimeter opening to accommodate construction tolerances and other irregularities.

C. Align window plumb and level, free of warp or twist. Maintain dimensional tolerances and alignment with adjacent Work.

D. Install sill and sill end angles.

E. Set sill members in bed of sealant or with gaskets, for weathertight construction.

F. Install windows and components to drain condensation, water penetrating joints, and moisture migrating within windows to the exterior.

G. Separate aluminum and other corrodible surfaces from sources of corrosion or electrolytic action at points of contact with other materials.

H. Install thermal isolation where components penetrate or disrupt building insulation. Pack fibrous insulation in shim spaces at perimeter of assembly to maintain continuity of thermal barrier.

I. Coordinate attachment and seal of perimeter air barrier and vapor retarder materials.

J. Install operating hardware.

3.3 ERECTION TOLERANCES

A. Section 01400 - Quality Requirements: Tolerances.

B. Maximum Variation from Level or Plumb: 1/16 inches every 3 ft non-cumulative or 1/8 inches per 10 ft, whichever is less.

3.4 ADJUSTING

A. Section 01700 - Execution Requirements: Testing, adjusting, and balancing.

B. Adjust hardware for smooth operation and secure weathertight closure.

3.5 CLEANING

A. Section 01700 - Execution Requirements: Final cleaning.

B. Remove protective material from factory finished aluminum surfaces.

C. Wash surfaces by method recommended and acceptable to sealant and window Manufacturer; rinse and wipe surfaces clean.

D. Remove excess sealant by moderate use of mineral spirits or other solvent acceptable to sealant and window Manufacturer.

3.6 DEMONSTRATION

A. Engage a factory-authorized service representative to train Owner's maintenance personnel to adjust, operate, and maintain window operating system.

END OF SECTION

SECTION 08710

DOOR HARDWARE

PART 1 - GENERAL

1.1 SUMMARY

A. Section includes hardware for wood, steel and aluminum doors.
   1. Provide door gaskets, including weather-stripping and seals, and thresholds.

B. Related Sections:
   1. Section 06200 - Finish Carpentry: Wood door frames
   2. Section 08110 - Standard Steel Doors
   3. Section 08115 - Standard Steel Frames
   4. Section 08212 - Flush Wood Doors
   5. Section 08333 - Overhead Coiling Doors: Lockable coiling doors
   6. Section 08410 - Metal-Framed Storefronts: Door hardware.

1.2 REFERENCES

A. American National Standards Institute:
   1. ANSI A156.1 - Butts and Hinges
   2. ANSI A156.2 - Bored and Preassembled Locks and Latches
   3. ANSI A156.3 - Exit Devices
   4. ANSI A156.4 - Door Controls - Closures
   5. ANSI A156.5 - Auxiliary Locks and Associated Products
   6. ANSI A156.6 - Architectural Door Trim
   7. ANSI A156.7 - Template Hinge Dimensions
   8. ANSI A156.8 - Door Controls - Overhead Holders
   9. ANSI A156.12 - Interconnected Locks and Latches
   10. ANSI A156.13 - Mortise Locks and Latches
   11. ANSI A156.15 - Closer Holder Release Devices
   12. ANSI A156.16 - Auxiliary Hardware
   13. ANSI A156.18 - Materials and Finishes
   14. ANSI A156 - Complete Set of 24 BHMA Standards (A156 Series) with Binder.

B. Builders Hardware Manufacturers Association:
   1. BHMA Directory of Certified Products.

C. National Fire Protection Association:
   1. NFPA 80 - Standard for Fire Doors, Fire Windows
   2. NFPA 252 - Standard Methods of Fire Tests of Door Assemblies.

D. Underwriters Laboratories Inc.:
   1. UL 10B - Fire Tests of Door Assemblies
   2. UL 305 - Panic Hardware
   3. UL - Building Materials Directory.

E. Intertek Testing Services (Warnock Hersey Listed):
   1. WH - Certification Listings.

1.3 PERFORMANCE REQUIREMENTS

A. Fire Rated Openings: Provide door hardware listed by UL or Intertek Testing Services (Warnock Hersey Listed), or other testing laboratory approved by applicable authorities.
   1. Hardware: Tested in accordance with NFPA 252.

1.4 SUBMITTALS

A. Section 01330 - Submittal Procedures: Submittal procedures.

B. Product Data: Include installation details, material descriptions, dimensions of individual components and profiles, and finishes.

C. Door Hardware Schedule: Prepared by or under the supervision of supplier, detailing fabrication and assembly of door hardware, as well as procedures and diagrams. Coordinate the final Door Hardware Schedule with doors, frames, and related work to ensure proper size, thickness, hand, function, and finish of door hardware.
   1. Format: Comply with scheduling sequence and vertical format in DHI's "Sequence and Format for the Hardware Schedule."
   2. Organization: Organize the Door Hardware Schedule into door hardware sets indicating complete designations of every item required for each door or opening.
      a. Organize door hardware sets in same order as in the Door Hardware Schedule at the end of Part 3.
   3. Content: Include the following information:
      a. Type, style, function, size, label, hand, and finish of each door hardware item
      b. Manufacturer of each item
      c. Fastenings and other pertinent information
      d. Location of each door hardware set, cross-referenced to Drawings, both on floor plans and in door and frame schedule
      e. Explanation of abbreviations, symbols, and codes contained in schedule
      f. Mounting locations for door hardware
      g. Door and frame sizes and materials.

D. Keying Schedule: Prepared by or under the supervision of supplier, detailing Owner's final keying instructions for locks. Include schematic keying diagram and index each key set to unique door designations.

E. Warranties: Special warranties specified in this Section.

F. Samples:
   1. Submit one sample of typical hinge, latchset, lockset, and closer, illustrating style, color, and finish.
   2. Approved samples may be incorporated into Work.

G. Manufacturer's Installation Instructions: Submit special procedures, and perimeter conditions requiring special attention.

1.5 CLOSEOUT SUBMITTALS

A. Section 01700 - Execution Requirements: Closeout procedures.

B. Project Record Documents: Record actual locations of installed cylinders and their master key code.

C. Operation and Maintenance Data: Submit data on operating hardware, lubrication requirements, and inspection procedures related to preventative maintenance.

D. Keys: Deliver with identifying tags to Owner by security shipment direct from hardware supplier.

1.6 QUALITY ASSURANCE

A. Installer Qualifications: An experienced Installer who has completed door hardware similar in material, design, and extent to that indicated for this Project and whose work has resulted in construction with a record of successful in-service performance.

B. Supplier Qualifications: Door hardware supplier with warehousing facilities in Project's vicinity and who is or employs a qualified Architectural Hardware Consultant, available during the course of the Work to consult with Contractor, Architect, and Owner about door hardware and keying.
1. Scheduling Responsibility: Preparation of door hardware and keying schedules.

C. Architectural Hardware Consultant Qualifications: A person who is currently certified by the Door and Hardware Institute as an Architectural Hardware Consultant and who is experienced in providing consulting services for door hardware installations that are comparable in material, design, and extent to that indicated for this Project.

D. Source Limitations: Obtain each type and variety of door hardware from a single Manufacturer, unless otherwise indicated.

E. Regulatory Requirements: Comply with provisions of the following:
1. Where indicated to comply with accessibility requirements, comply with Americans with Disabilities Act (ADA), "Accessibility Guidelines for Buildings and Facilities (ADAAG),"as follows:
a. Handles, Pulls, Latches, Locks, and other Operating Devices: Shape that is easy to grasp with one hand and does not require tight grasping, tight pinching, or twisting of the wrist.
b. Door Closers: Comply with the following maximum opening-force requirements indicated:
1) Interior Hinged Doors: 5 lbf applied perpendicular to door.
2) Fire Doors: Minimum opening force allowable by authorities having jurisdiction.

c. Thresholds: Not more than 1/2 inch high. Bevel raised thresholds with a slope of not more than 1:2.

2. NFPA 101: Comply with the following for means of egress doors:
   a. Latches, Locks, and Exit Devices: Not more than 15 lbf to release the latch. Locks shall not require the use of a key, tool, or special knowledge for operation.
   b. Door Closers: Not more than 30 lbf to set door in motion and not more than 15 lbf to open door to minimum required width.
   c. Thresholds: Not more than 1/2 inch high.
3. Electrified Door Hardware: Listed and labeled as defined in NFPA 70, Article 100, by a testing agency acceptable to authorities having jurisdiction.

F. Fire-Rated Door Assemblies: Provide door hardware for assemblies complying with NFPA 80 that are listed and labeled by a testing and inspecting agency acceptable to authorities having jurisdiction, for fire ratings indicated, based on testing according to NFPA 252.
   1. Test Pressure: Test at atmospheric pressure.

G. Keying Conference: Conduct conference at Project site to comply with requirements in Division 1 Section "Project Meetings." Incorporate keying conference decisions into final keying schedule after reviewing door hardware keying system including, but not limited to, the following:
   1. Function of building, flow of traffic, purpose of each area, degree of security required, and plans for future expansion
   2. Preliminary key system schematic diagram
   3. Requirements for key control system
   4. Address for delivery of keys.

H. Maintain one copy of each document on site.

1.7 QUALIFICATIONS

A. Manufacturer: Company specializing in manufacturing products specified in this section with minimum three years documented experience.

B. Hardware Supplier: Company specializing in supplying commercial door hardware with minimum three years documented experience.

C. Hardware Supplier Personnel: Employ Architectural Hardware Consultant (AHC) to assist in work of this section.

1.8 PRE-INSTALLATION MEETINGS

A. Section 01300 - Administrative Requirements: Pre-installation meeting.

B. Convene minimum two weeks prior to commencing work of this section.

C. Include persons involved with installation of doors, frames, and hardware.

1.9 DELIVERY, STORAGE, AND HANDLING

A. Section 01600 - Product Requirements: Product storage and handling requirements.

B. Package hardware items individually with necessary fasteners, instructions, and installation templates, when necessary; label and identify each package with door opening code to match hardware schedule.

C. Deliver keys to Owner by registered mail or overnight package service.

1.10 COORDINATION

A. Section 01300 - Administrative Requirements: Coordination and project conditions.

B. Coordinate Work with other directly affected sections involving manufacture or fabrication of internal reinforcement for door hardware and recessed items.
   1. Provide templates or actual hardware as required to ensure proper preparation of doors and frames.

C. Sequence installation to accommodate required utility connections.

D. Coordinate Owner's keying requirements during course of Work.

1.11 WARRANTY

A. Section 01700 - Execution Requirements: Product warranties and product bonds.

B. General Warranty: Special warranties specified in this Article shall not deprive Owner of other rights Owner may have under other provisions of the Contract Documents and shall be in addition to, and run concurrent with, other warranties made by Contractor under requirements of the Contract Documents.

C. Special Warranty: Written warranty, executed by Manufacturer agreeing to repair or replace components of door hardware that fail in materials or workmanship within specified warranty period. Failures include, but are not limited to, the following:
   1. Structural failures including excessive deflection, cracking, or breakage
   2. Faulty operation of operators and door hardware
   3. Deterioration of metals, metal finishes, and other materials beyond normal weathering.

D. Warranty Period: Three years from date of Substantial Completion, unless otherwise indicated.

E. Warranty Period for Manual Closers: 10 years from date of Substantial Completion.

1.12 MAINTENANCE MATERIALS

A. Section 01700 - Execution Requirements: Maintenance materials.

B. Furnish special wrenches and tools applicable for each different and for each special hardware component.

C. Furnish maintenance tools and accessories supplied by hardware component Manufacturer.

1.13 EXTRA MATERIALS

A. Section 01700 - Execution Requirements: Spare parts and maintenance products.

B. Furnish ten extra key lock cylinders for each master keyed group.

PART 2 - PRODUCTS

2.1 SCHEDULED DOOR HARDWARE

A. General: Provide door hardware for each door to comply with requirements in this Section, door hardware sets indicated in door and frame schedule, and the Door Hardware Schedule at the end of Part 3.
1. Door Hardware Sets: Provide quantity, item, size, finish or color indicated, and products equivalent in function and comparable in quality to named products.

B. Designations: Requirements for design, grade, function, finish, size, and other distinctive qualities of each type of door hardware are indicated in the Door Hardware Schedule at the end of Part 3. Products are identified by using door hardware designations, as follows:
1. Named Manufacturer's Products: Product designation and Manufacturer are listed for each door hardware type required for the purpose of establishing minimum requirements. Manufacturers' names are abbreviated in the Door Hardware Schedule.

2.2 HINGES AND PIVOTS

A. Manufacturers: Subject to compliance with requirements, provide products by one of the following:
1. Hinges:
a. Hager Companies (HAG)
b. Stanley Commercial Hardware; Div. of The Stanley Works (ST).

B. Quantity: Provide the following, unless otherwise indicated:
1. Two Hinges: For doors with heights up to 60 inches
2. Three Hinges: For doors with heights 61 to 90 inches
3. Four Hinges: For doors with heights 91 to 120 inches
4. For doors with heights more than 120 inches, provide 4 hinges, plus 1 hinge for every 30 inches of door height greater than 120 inches.

C. Size: Provide the following, unless otherwise indicated, with hinge widths sized for door thickness and clearances required:

Maximum Door Size (inches)	Hinge Height (inches)	Metal Thickness (inches) Standard Weight	Heavy Weight
32 by 84 by 1-3/8	3-1/2	0.123	-
36 by 84 by 1-3/8	4	0.130	-
36 by 84 by 1-3/4	4-1/2	0.134	0.180
42 by 90 by 1-3/4	4-1/2	0.134	0.180
48 by 120 by 1-3/4	5	0.146	0.190

D. Template Requirements: Except for hinges and pivots to be installed entirely (both leaves) into wood doors and frames, provide only template-produced units.

E. Hinge Weight: Unless otherwise indicated, provide the following:
1. Entrance Doors: Heavy-weight hinges
2. Doors with Closers: Antifriction-bearing hinges
3. Interior Doors: Standard-weight hinges.

F. Hinge Base Metal: Unless otherwise indicated, provide the following:
1. Exterior Hinges: Stainless steel, with stainless-steel pin
2. Interior Hinges: Brass, with stainless-steel pin
3. Hinges for Fire-Rated Assemblies: Steel, with steel pin.

G. Hinge Options: Comply with the following where indicated in the Door Hardware Schedule or on Drawings:
1. Nonremovable Pins: Provide set screw in hinge barrel that, when tightened into a groove in hinge pin, prevents removal of pin while door is closed; for the following applications:
   a. Out swinging exterior doors
   b. Out swinging corridor doors with locks.
2. Corners: Square.

H. Fasteners: Comply with the following:
1. Machine Screws: For metal doors and frames. Install into drilled and tapped holes.
2. Wood Screws: For wood doors and frames.
3. Threaded-to-the-Head Wood Screws: For fire-rated wood doors.
4. Screws: Phillips flat-head screws; machine screws (drilled and tapped holes) for metal doors wood screws for wood doors and frames. Finish screw heads to match surface of hinges.

2.3 LOCKS AND LATCHES

A. Manufacturers: Subject to compliance with requirements, provide products by one of the following:
1. Mechanical Locks and Latches:

a. Best Lock Corporation (BLC).
b. Corbin Russwin Architectural Hardware; Div. of Yale Security Inc. (CR).
c. Schlage Lock Company; an Ingersoll-Rand Company (SCH).

B. Lock Trim: Comply with the following:
1. Lever: Wrought, forged, or cast
2. Escutcheon (Rose): Wrought, forged, or cast
3. Dummy Trim: Match lever lock trim and escutcheons
4. Lockset Designs: Provide the lockset design designated below or, if sets are provided by another Manufacturer, provide designs that match those designated:

Mortise Locks: Provide design indicated.

C. Lock Throw: Comply with testing requirements for length of bolts to comply with labeled fire door requirements, and as follows:
1. Bored Locks: Minimum 1/2-inch latchbolt throw
2. Mortise Locks: Minimum 3/4-inch latchbolt throw
3. Deadbolts: Minimum 1-inch bolt throw.

D. Backset: 2-3/4 inches, unless otherwise indicated.

2.4 DOOR BOLTS

A. Manufacturers: Subject to compliance with requirements, provide products by one of the following:
1. Flush Bolts:
a. Glynn-Johnson; an Ingersoll-Rand Company (GJ)
b. Hager Companies (HAG)
c. Triangle Brass Manufacturing Company, Inc. (TBM).

B. Bolt Throw: Comply with testing requirements for length of bolts to comply with labeled fire door requirements, and as follows:
1. Mortise Flush Bolts: Minimum 3/4-inch throw.

2.5 CYLINDERS AND KEYING

A. Manufacturers: Subject to compliance with requirements, provide products by one of the following:
1. Cylinders: Same Manufacturer as for locks and latches.
2. Key Control Systems:
a. Best Lock Corporation (BLC)
b. Key Control Systems, Inc. (KCS)
c. Sargent Manufacturing Company; Div. of ESSEX Industries, Inc. (SGT).

B. Cylinders: Manufacturer's standard tumbler type, constructed from brass or bronze, stainless steel, or nickel silver, and complying with the following:
1. Number of Pins: Six
2. Mortise Type: Threaded cylinders with rings and straight- or clover-type cam.

C. Permanent Cores: Manufacturer's standard; finish face to match lockset; complying with the following:
   1. Interchangeable Cores: Core insert, removable by use of a special key, and usable with other Manufacturers' cylinders.

D. Construction Keying: Comply with the following:
   1. Construction Cores: Provide construction cores that are replaceable by permanent cores. Provide 10 construction master keys.
      a. Replace construction cores with permanent cores, as directed by Owner.

E. Keying System: Unless otherwise indicated, provide a factory-registered keying system complying with the following requirements:
   1. Great-Grand Master Key System: Cylinders are operated by a change key, a master key, a grand master key, and a great-grand master key.

F. Keys: Provide nickel-silver keys complying with the following:
   1. Stamping: Permanently inscribe each key with a visual key control number and include the following notation:
      a. Notation: "DO NOT DUPLICATE."
   2. Quantity: In addition to three keys for each lock, provide the following:
      a. Cylinder Change Keys: Five
      b. Master Keys: Five
      c. Grand Master Keys: Five
      d. Great-Grand Master Keys: Five.

G. Key Control System: BHMA Grade 1 system, including key-holding hooks, labels, two sets of key tags with self-locking key holders, key-gathering envelopes, and temporary and permanent markers. Contain system in metal cabinet with baked-enamel finish.
   1. Portable Cabinet: Tray for mounting in file cabinet, equipped with key-holding panels, envelopes, and cross-index system.
   2. Capacity: Able to hold keys for 150 percent of the number of locks.
   3. Cross-Index System: Set up by key control Manufacturer, complying with the following:
      a. Card Index: Furnish four sets of index cards for recording key information. Include three receipt forms for each key-holding hook.
      b. Computer Software: Furnish cross-index software for recording and reporting key-holder listings, tracking keys and lock and key history, and printing receipts for transactions. Include instruction manual.

2.6 STRIKES

A. Strikes: Provide Manufacturer's standard strike with strike box for each latch or lock bolt, with curved lip extended to protect frame, finished to match door hardware set, unless otherwise indicated, and as follows:
   1. Flat-Lip Strikes: For locks with three-piece antifriction latchbolts, as recommended by Manufacturer.

2.7 OPERATING TRIM

A. Manufacturers: Subject to compliance with requirements, provide products by one of the following:
   1. Forms + Surfaces (FS)
   2. Stanley Commercial Hardware; Div. of The Stanley Works (ST)
   3. Triangle Brass Manufacturing Company, Inc. (TBM).

B. Materials: Fabricate from stainless steel, unless otherwise indicated.

C. Push-Pull Design: As indicated at the end of Part 3.

2.8 CLOSERS

A. Manufacturers: Subject to compliance with requirements, provide products by one of the following:
   1. Surface-Mounted Closers:
      a. Corbin Russwin Architectural Hardware; Div. of Yale Security Inc. (CR)
      b. LCN Closers; an Ingersoll-Rand Company (LCN).

B. Size of Units: Unless otherwise indicated, comply with Manufacturer's written recommendations for size of door closers depending on size of door, exposure to weather, and anticipated frequency of use. Provide factory-sized closers, adjustable to meet field conditions and requirements for opening force.

2.9 PROTECTIVE TRIM UNITS

A. Manufacturers: Subject to compliance with requirements, provide products by one of the following:
   1. Metal Protective Trim Units:
      a. Hager Companies (HAG)
      b. NT Quality Hardware; an Ingersoll-Rand Company (NTQ)
      c. Triangle Brass Manufacturing Company, Inc. (TBM).

B. Materials: Fabricate protection plates from the following:
   1. Stainless Steel: 0.050 inch thick; beveled top and 2 sides.

C. Fasteners: Provide Manufacturer's standard exposed fasteners for door trim units consisting of either machine or self-tapping screws.

D. Furnish protection plates sized 1-1/2 inches less than door width on push side and 1/2 inch less than door width on pull side, by height specified in Door Hardware Schedule.

2.10 STOPS AND HOLDERS

A. Manufacturers: Subject to compliance with requirements, provide products by one of the following:
   1. Hager Companies (HAG)
   2. Triangle Brass Manufacturing Company, Inc. (TBM)

B. Standards: Comply with the following:
   1. Stops and Bumpers: BHMA A156.16
   2. Door Silencers: BHMA A156.16.

C. Stops and Bumpers: BHMA Grade 1, unless Grade 2 is indicated.

D. Combination Overhead Stops and Holders: BHMA Grade 1, unless Grade 2 is indicated.

E. Floor Stops: For doors, unless wall or other type stops are scheduled or indicated. Do not mount floor stops where they will impede traffic.
   1. Where floor or wall stops are not appropriate, provide overhead holders.

F. Silencers for Metal Door Frames: BHMA Grade 1; neoprene or rubber, minimum diameter 1/2 inch; fabricated for drilled-in application to frame.

2.11 DOOR GASKETING

A. Manufacturers: Subject to compliance with requirements, provide products by one of the following:
   1. Door Gasketing:
      a. National Guard Products, Inc. (NGP)
      b. Pemko Manufacturing Co., Inc. (PEM)
      c. Zero International, Inc. (ZRO).
   2. Door Bottoms:
      a. National Guard Products, Inc. (NGP)
      b. Pemko Manufacturing Co., Inc. (PEM)
      c. Zero International, Inc. (ZRO).

B. General: Provide continuous weather-strip gasketing on exterior doors and provide smoke, light, or sound gasketing on interior doors where indicated or scheduled. Provide noncorrosive fasteners for exterior applications and elsewhere as indicated.
   1. Perimeter Gasketing: Apply to head and jamb, forming seal between door and frame.
   2. Door Bottoms: Apply to bottom of door, forming seal with threshold when door is closed.

C. Air Leakage: Not to exceed 0.50 cfm per foot of crack length for gasketing other than for smoke control, as tested according to ASTM E 283.

D. Smoke-Labeled Gasketing: Assemblies complying with NFPA 105 that are listed and labeled by a testing and inspecting agency acceptable to authorities having jurisdiction, for smoke-control ratings indicated, based on testing according to UL 1784.
   1. Provide smoke-labeled gasketing on 20-minute-rated doors, fire rated labeled, and on smoke-labeled doors.

E. Fire-Labeled Gasketing: Assemblies complying with NFPA 80 that are listed and labeled by a testing and inspecting agency acceptable to authorities having jurisdiction, for fire ratings indicated, based on testing according to UL 10B or NFPA 252.

F. Replaceable Seal Strips: Provide only those units where resilient or flexible seal strips are easily replaceable and readily available from stocks maintained by Manufacturer.

G. Gasketing Materials: Comply with ASTM D 2000 and AAMA 701/702.

2.12 THRESHOLDS

A. Manufacturers: Subject to compliance with requirements, provide products by one of the following:
1. National Guard Products, Inc. (NGP)
2. Pemko Manufacturing Co., Inc. (PEM)
3. Zero International, Inc. (ZRO).

2.13 EXIT DEVICES

A. Manufacturers: Subject to compliance with requirements, provide products by one of the following:
1. Corbin Russwin Architectural Hardware; Div. of Yale Security Inc. (CR)
2. Dorma (D)

B. Exit Devices: ANSI A156.3, Grade 1 rim type, with push pad, unless otherwise indicated. Furnish standard strikes with extended lips to protect trim from being marred by latch bolt verify type of cutouts provided in metal frames.
1. Types: Suitable for doors requiring exit devices.

2.14 MISCELLANEOUS DOOR HARDWARE

A. Manufacturers: Subject to compliance with requirements, provide products by one of the following:
1. Hager Companies (HAG)
2. Triangle Brass Manufacturing Company, Inc. (TBM).

B. If needed, add requirements for access control devices, such as digital keypads, proximity sensors, switch devices, etc.

2.15 FABRICATION

A. Base Metals: Produce door hardware units of base metal, fabricated by forming method indicated, using Manufacturer's standard metal alloy, composition, temper, and hardness. Furnish metals of a quality equal to or greater than that of specified door hardware units and BHMA A156.18 for finishes. Do not furnish Manufacturer's standard materials or forming methods if different from specified standard.

B. Fasteners: Provide door hardware manufactured to comply with published templates generally prepared for machine, wood, and sheet metal screws. Provide screws according to commercially recognized industry standards for application intended. Provide Phillips flat-head screws with finished heads to match surface of door hardware, unless otherwise indicated.

1. Concealed Fasteners: For door hardware units that are exposed when door is closed, except for units already specified with concealed fasteners. Do not use through bolts for installation where bolt head or nut on opposite face is exposed unless it is the only means of securely attaching the door hardware. Where through bolts are used on hollow door and frame construction, provide sleeves for each through bolt.
2. Steel Machine or Wood Screws: For the following fire-rated applications:
   a. Mortise hinges to doors.
   b. Strike plates to frames.
   c. Closers to doors and frames.
3. Steel Through Bolts: For the following fire-rated applications, unless door blocking is provided:
   a. Surface hinges to doors.
   b. Closers to doors and frames.
   c. Surface-mounted exit devices.
4. Spacers or Sex Bolts: For through bolting of hollow metal doors.
5. Fasteners for Wood Doors: Comply with requirements of DHI WDHS.2, "Recommended Fasteners for Wood Doors."

2.16 FINISHES

A. Standard: Comply with BHMA A156.18.

B. Protect mechanical finishes on exposed surfaces from damage by applying a strippable, temporary protective covering before shipping.

C. Appearance of Finished Work: Variations in appearance of abutting or adjacent pieces are acceptable if they are within one-half of the range of approved Samples. Noticeable variations in the same piece are not acceptable. Variations in appearance of other components are acceptable if they are within the range of approved Samples and are assembled or installed to minimize contrast.

D. BHMA Designations: Comply with base material and finish requirements indicated by the following:
   1. BHMA 626: Satin chromium plated over nickel, over brass or bronze base metal
   2. BHMA 628: Satin aluminum, clear anodized, over aluminum base metal
   3. BHMA 630: Satin stainless steel, over stainless-steel base metal
   4. BHMA 652: Satin chromium plated over nickel, over steel base metal
   5. BHMA 689: Aluminum painted, over any base metal.

PART 3 - EXECUTION

3.1 EXAMINATION

A. Examine doors and frames, with Installer present, for compliance with requirements for installation tolerances, labeled fire door assembly construction, wall and floor construction, and other conditions affecting performance.

B. Proceed with installation only after unsatisfactory conditions have been corrected.

3.2 PREPARATION

A. Steel Doors and Frames: Comply with DHI A115 series.
   1. Surface-Applied Door Hardware: Drill and tap doors and frames according to SDI 107.

B. Wood Doors: Comply with DHI A115-W series.

3.3 INSTALLATION

A. Mounting Heights: Mount door hardware units at heights indicated in following applicable publications, unless specifically indicated or required to comply with governing regulations:
   1. Standard Steel Doors and Frames: DHI's "Recommended Locations for Architectural Hardware for Standard Steel Doors and Frames"
   2. Custom Steel Doors and Frames: DHI's "Recommended Locations for Builders' Hardware for Custom Steel Doors and Frames"
   3. Wood Doors: DHI WDHS.3, "Recommended Locations for Architectural Hardware for Wood Flush Doors."

B. Install each door hardware item to comply with Manufacturer's written instructions. Where cutting and fitting are required to install door hardware onto or into surfaces that are later to be painted or finished in another way, coordinate removal, storage, and reinstallation of surface protective trim units with finishing work specified in Division 9 Sections. Do not install surface-mounted items until finishes have been completed on substrates involved.
   1. Set units level, plumb, and true to line and location. Adjust and reinforce attachment substrates as necessary for proper installation and operation.
   2. Drill and countersink units that are not factory prepared for anchorage fasteners. Space fasteners and anchors according to industry standards.

C. Key Control System: Place keys on markers and hooks in key control system cabinet, as determined by final keying schedule.

D. Thresholds: Set thresholds for exterior and acoustical doors in full bed of sealant complying with requirements specified in Division 7 Section "Joint Sealants."

3.4 ADJUSTING

A. Initial Adjustment: Adjust and check each operating item of door hardware and each door to ensure proper operation or function of every unit. Replace units that cannot be adjusted to operate as intended. Adjust door control devices to compensate for final operation of heating and ventilating equipment and to comply with referenced accessibility requirements.
   1. Door Closers: Adjust sweep period so that, from an open position of 70 degrees, the door will take at least 3 seconds to move to a point 3 inches from the latch, measured to the leading edge of the door.

2. All door hardware shall fully comply with the latest version of Texas Accessibility Standards (TAS) of the Architectural Barriers Act, Article 9102, Texas Civil Statutes.

3.5 CLEANING AND PROTECTION

A. Clean adjacent surfaces soiled by door hardware installation.

B. Clean operating items as necessary to restore proper function and finish.

C. Provide final protection and maintain conditions that ensure door hardware is without damage or deterioration at time of Substantial Completion.

3.6 DEMONSTRATION

A. Engage a factory-authorized service representative to train Owner's maintenance personnel to adjust, operate, and maintain door hardware and door hardware finishes.

3.7 DOOR HARDWARE SCHEDULE

HW-1 (Exterior Exit Doors)

3 ea.	Hinges	CB191, 4.5 x 4.5, NRP	ST	630
1 ea.	Lockset	35H, AW, 16, N,	BLC	626
1 ea.	Panic Hardware	5300, rim	D	626
1 ea.	Closer	DC6210, A11	CR	626
1 ea.	Threshold	2005T	PEM	719
1 ea.	Kick Plate	K0050, 10” High	TBM	630
1 ea.	Door Sweep	345A	PEM	719
1 ea.	Auto. Door Bottom	4301CRL (surface mtd.) w/ end plates	PEM	628
1 ea.	Door Stop	1214	TMB	6309
1 set	Weatherstrip	290AS	PEM	719

HW-2 (Storage Room)

6 ea.	Hinges	CB179, 4.5 x 4.5	ST	626
1 ea.	Lockset	73K, D, 16, D, lever lock	BLC	626
2 ea.	Flush Bolts	W3917	TBM	626
1 ea.	Closer	DC6210, A11	CR	626
1 set	Smoke Gasket	PK55D W/HSS2000	PEM	
1 ea.	Kick Plate	K0050, 10” High	TBM	630

HW-3 (Corridor exit)

3 ea.	Hinges	CB179, 4.5 x 4.5	ST	626
1 ea.	Lockset	73K, D, 16, R, lever lock	BLC	626
1 ea.	Panic Hardware	5300, rim	D	626
1 ea.	Closer	DC6210, A11	CR	626
1 ea.	Kick Plate	K0050, 10” High	TBM	630
1 ea.	Auto. Door Bottom	4301CRL (surface mtd.) w/ end plates	PEM	719
1 set	Smoke Gasket	PK55D W/HSS2000	PEM	
1 ea.	Door Stop	1214	TMB	6309

HW-4 (Storage rooms, Electrical, Data)

3 ea.	Hinges	CB179, 4.5 x 4.5	ST	626
1 ea.	Lockset	73K, D, 16, R, lever lock	BLC	626
1 ea.	Closer	DC6210, A11	CR	626
1 set	Smoke Gasket	PK55D W/HSS2000	PEM	
1 ea.	Wall Stop	1278CX	TBM	628

HW-5 (Toilets – Private)

3 ea.	Hinges	CB179, 4.5 x 4.5	ST	626
1 ea.	Privacy Set	73K, D, 16, L, lever lock	BLC	626
1 ea.	Closer	DC6210, A11	CR	626

1 set	Smoke Gasket	PK55D W/HSS2000	PEM	
1 ea.	Wall Stop	1278CX	TBM	628

HW-6 (Meeting Room)

3 ea.	Hinges	CB179, 4.5 x 4.5	ST	626
1 ea.	Passage	73K, D, 16, N, lever	BLC	626
1 ea.	Wall Stop	1278CX	TBM	628
1 ea.	Kick Plate	K0050, 4” High	TBM	630
1 ea.	Closer	DC6210, A11	CR	626
1 set	Smoke Gasket	PK55D W/HSS2000	PEM	

HW-7 (Office)

3 ea.	Hinges	CB179, 4.5 x 4.5	ST	626
1 ea.	Passage	73K, D, 16, R, lever lock	BLC	626
1 ea.	Wall Stop	1278CX	TBM	628
1 set	Smoke Gasket	PK55D W/HSS2000	PEM	

HW-8 (Toilets – Public)

3 ea.	Hinges	CB179, 4.5 x 4.5	ST	626
1 ea.	pull handle #1059-3 4"x16"		TMB	630
1 ea.	push plate #1001-3 4"x16" 32D		TMB	630
1 ea.	Wall Stop	1278CX	TBM	628
2 ea.	Kick Plate	K0050, 10” High	TBM	630
1 ea.	Closer	DC2210	CR	626
1 set	Smoke Gasket	PK55D W/HSS2000	PEM	

HW-9 (Storefront Entrance)

1 ea.	Threshold	158A	PEM	719
1 ea.	cylinder			

Remainder of Hardware by Door Supplier.

1 each deadlock
1 each door closers
1 each doorstop
1 each push bar,
1 each door pull,
1 each bottom rail weather-stripping
1 each panic hardware

HW-10 (Overhead doors)

1 ea. cylinder

Remainder of Hardware by Door Supplier.

END OF SECTION

SECTION 08800

GLAZING

PART 1 - GENERAL

1.1 SUMMARY

A. Section includes glass glazing for metal frames, doors, and windows.
   1. Glass glazing materials and installation requirements are included in this section for other sections referencing this section.

B. Related Sections:
   1. Section 07900 - Joint Sealers: Sealant and back-up material other than glazing sealants
   2. Section 08110 - Standard Steel Doors: Glazed doors
   3. Section 08212 - Flush Wood Doors: Glazed doors
   4. Section 08410 - Metal-Framed Storefronts
   5. Section 08520 - Aluminum Windows: Glazed windows.

1.2 REFERENCES

A. American National Standards Institute:
   1. ANSI Z97.1 - Safety Glazing Materials Used in Buildings Safety.

B. American Society of Civil Engineers:
   1. ASCE 7 - Minimum Design Loads for Buildings and Other Structures.

C. ASTM International:
   1. ASTM C570 - Standard Specification for Oil- and Resin-Base Caulking Compound for Building Construction
   2. ASTM C669 - Standard Specification for Glazing Compounds for Back Bedding and Face Glazing of Metal Sash
   3. ASTM C864 - Standard Specification for Dense Elastomeric Compression Seal Gaskets, Setting Blocks, and Spacers
   4. ASTM C920 - Standard Specification for Elastomeric Joint Sealants
   5. ASTM C1036 - Standard Specification for Flat Glass
   6. ASTM C1048 - Standard Specification for Heat-Treated Flat Glass-Kind HS, Kind FT Coated and Uncoated Glass
   7. ASTM C1172 - Standard Specification for Laminated Architectural Flat Glass.
   8. ASTM C1193 - Standard Guide for Use of Joint Sealants
   9. ASTM D4802 - Standard Specification for Poly (Methyl Methacrylate) Acrylic Plastic Sheet
   10. ASTM E90 - Standard Test Method for Laboratory Measurement of Airborne Sound Transmission Loss of Building Partitions and Elements
   11. ASTM E330 - Standard Test Method for Structural Performance of Exterior Windows, Curtain Walls, and Doors By Uniform Static Air Pressure Difference

12. ASTM E546 - Standard Test Method for Frost Point of Sealed Insulating Glass Units
13. ASTM E576 - Standard Test Method for Frost Point of Sealed Insulating Glass Units in the Vertical Position
14. ASTM E773 - Standard Test Methods for Seal Durability of Sealed Insulating Glass Units
15. ASTM E774 - Standard Specification for Sealed Insulating Glass Units
16. ASTM E1425 - Standard Practice for Determining the Acoustical Performance of Exterior Windows and Doors.

D. Glass Association of North America:
1. GANA - FGMA Sealant Manual
2. GANA - Glazing Manual
3. GANA - Laminated Glass Design Guide.

E. National Fire Protection Association:
1. NFPA 80 - Standard for Fire Doors, Fire Windows.

F. Underwriters Laboratories Inc.:
1. UL - Building Materials Directory.

1.3 PERFORMANCE REQUIREMENTS

A. Provide glass and glazing materials for continuity of building enclosure vapor retarder and air barrier:
1. In conjunction with materials described in Section 07900.
2. To utilize inner pane of multiple pane sealed units for continuity of air barrier and vapor retarder seal.
3. To maintain continuous air barrier and vapor retarder throughout glazed assembly from glass pane to heel bead of glazing sealant.

B. Size glass to withstand dead loads and positive and negative live loads acting normal to plane of glass as calculated in accordance with applicable code, as measured in accordance with ASTM E330 and as calculated in accordance with ASCE 7 - Calculation of Wind Loads.
1. Not less than wind loads applicable to Project as required by ASCE 7 "Minimum Design Loads for Buildings and Other Structures":
2. Design per local code requirements for wind loads.

C. Limit glass deflection to 1/200 or flexure limit of glass with full recovery of glazing materials, whichever is less.

1.4 SUBMITTALS

A. Section 01330 - Submittal Procedures: Submittal procedures.

B. Product Data:
1. Glass: Provide structural, physical and environmental characteristics, size limitations, special handling or installation requirements.

2. Glazing Sealants, Compounds and Accessories: Provide chemical, functional, and environmental characteristics, limitations, special application requirements. Identify available colors where exposed.

C. Samples:
1. Glass: Submit two samples 12 x 12 inch in size, illustrating each glass units, coloration.
2. Glazing Materials: Submit 6 inch long bead of glazing sealant and gaskets, color as selected.

D. Certificates: Certify products meet or exceed specified requirements.

E. Manufacturer's Certificate: Certify sealed insulated glass, meets or exceeds specified requirements.

F. Qualification Data: For Installers.

G. Product Test Reports: For each of the following types of glazing products:
1. Tinted float glass
2. Coated float glass
3. Insulating glass
4. Glazing gaskets.

H. Warranties: Special warranties specified in this Section.

1.5 QUALITY ASSURANCE

A. Perform Work in accordance with GANA Glazing Manual, GANA Sealant Manual, for glazing installation methods.

B. Installer Qualifications: An experienced Installer who has completed glazing similar in material, design, and extent to that indicated for this Project; whose work has resulted in glass installations with a record of successful in-service performance; and who employs glass Installers for this Project who are certified under the National Glass Association's Certified Glass Installer Program.

C. Source Limitations for Glazing Accessories: Obtain glazing accessories through one source from a single Manufacturer for each product and installation method indicated.

D. Insulating-Glass Certification Program: Permanently marked either on spacers or on at least one component lite of units with appropriate certification label of the following testing and inspecting agency:
1. Insulating Glass Certification Council.

E. Maintain one copy of each document on site.

1.6 QUALIFICATIONS

A. Installer: Company specializing in performing Work of this section with minimum three years documented experience approved by Manufacturer.

1.7 PRE-INSTALLATION MEETING

A. Section 01300 - Administrative Requirements: Preinstallation meeting.

B. Convene minimum one week before starting Work of this section.

1.8 DELIVERY, STORAGE, AND HANDLING

A. Protect glazing materials according to Manufacturer's written instructions and as needed to prevent damage to glass and glazing materials from condensation, temperature changes, direct exposure to sun, or other causes.

B. For insulating-glass units that will be exposed to substantial altitude changes, comply with insulating-glass Manufacturer's written recommendations for venting and sealing to avoid hermetic seal ruptures.

1.9 ENVIRONMENTAL REQUIREMENTS

A. Section 01600 - Product Requirements.

B. Do not install glazing when ambient temperature is less than 50 degrees F.

C. Environmental Limitations: Do not proceed with glazing when ambient and substrate temperature conditions are outside limits permitted by glazing material Manufacturers and when glazing channel substrates are wet from rain, frost, condensation, or other causes.

D. Maintain minimum ambient temperature before, during and 24 hours after installation of glazing compounds.

1.10 WARRANTY

A. Section 01700 - Execution Requirements: Product warranties and product bonds.

B. Furnish ten year warranty to include coverage for sealed glass units from seal failure, interpane dusting or misting, and replacement of same.

C. Furnish ten year warranty to include coverage for delamination of laminated glass and replacement of same.

1.11 EXTRA MATERIALS

A. Section 01700 - Execution Requirements: Spare parts and maintenance products.

B. Supply two of each insulated glass units for windows.

PART 2 - PRODUCTS

2.1 GLAZING

A. Manufacturers:
1. Substitutions: Section 01600 - Product Requirements.

B. Sealed Insulating Glass Manufacturers:
1. Substitutions: Section 01600 - Product Requirements.

2.2 COMPONENTS

A. Flat Glass (Type FG): Minimum 1/4 inch unless otherwise indicated.
1. Clear Float Glass (Type FG-CF): ASTM C1036, Type 1 transparent flat, Class 1 clear, Quality q3 glazing select
2. Clear Heat Strengthened Glass (Type FG-CH): ASTM C1048, Kind HS, heat strengthened, Condition A uncoated, Type 1 transparent flat, Class 1 clear, Quality q3 glazing select
3. Tinted Float Glass (Type FG-TF): ASTM C1036, Type 1 transparent flat, Class 2 tinted heat-absorbing and light reducing, Quality q3 glazing select
4. Tinted Heat Strengthen Glass (Type FG-TH): ASTM C1048, Kind HS heat strengthened, Condition A uncoated, Type 1 transparent flat, Class 2 tinted heat-absorbing and light reducing, Quality q3 glazing select
5. Low E Clear Float Glass (Type FG-EC): Clear float glass Type FG-CF, with low emissivity coating on inner surface
6. Low E Clear Heat Strengthened Glass (Type FG-EHC): Clear heat strengthened glass Type FG-CH, with low emissivity coating on inner Number 2 surface
7. Low E Tinted Heat Strengthened Glass (Type FG-EHT): Tinted heat strengthened glass Type FG-TH, with low emissivity coating on inner surface.

B. Safety Glass (Type SG): Conform to ANSI Z97.1, minimum thickness 1/4 inch unless otherwise indicated.
1. Clear Tempered Glass (Type SG-CT): ASTM C1048, Kind FT Fully tempered, Condition A, uncoated, Type 1 transparent flat, Class 1 clear, Quality q3 glazing select
2. Tinted Tempered Glass (Type FG-TT): ASTM C1048, Kind FT Fully tempered, Condition A, uncoated, Type 1 transparent flat, Class 2 tinted heat-absorbing and light reducing, Quality q3 glazing select
a. Tint: Blue-Green.

C. Fire Resistive Glass (Type FRG): Glazing materials to by types approved for use with specified materials in fire rated applications. Minimum 1/4 inch thick unless otherwise indicated.
1. Fire-Resistive Gel-Filled Safety Glazing (Type FRG-GC): Transparent fire-resistive safety glazing.

a. Fire Rating: 20 minute rating as listed in UL Building Materials Directory and approved by applicable authorities
b. Thickness: Manufacturer's standard for applications indicated
c. Safety Glazing: Comply with ANSI Z97.1.

D. Solar-Control Low-E Insulating-Glass Units IG-1:
1. Basis-of-Design Product: Sungate 500(3) Low-E Glass Azuria by PPG Industries, Inc. or approved equivalent:
a. Overall Unit Thickness and Thickness of Each Lite: 1inch total with ¼" inch lite
b. Interspace Content: Dry Hermetic Air
c. Outdoor Lite: Azuria Class 2 (tinted) float glass by PPG Industries, Inc.
1) Tint Color: "Sungate" (Blue-Green)
2) Kind HS (heat strengthened) of Kind FT (fully tempered).
d. Indoor Lite: Class 1 (clear**)** float glass.
1) Annealed or Kind FT (fully tempered).
2. Low-E Coating: Sputtered on third surface
3. Visible Light Transmittance: 57 percent
4. Winter Nighttime U-Factor: 0.35
5. Summer Daytime U-Factor: 0.35
6. Solar Heat Gain Coefficient: 0.46
7. Outdoor Visible Reflectance: 12 percent
8. Shading Coefficient: 0.40
9. Insulated Glass Unit Edge Seal Construction: Aluminum, bent and soldered corners
10. Spacer Specifications: Manufacturer's standard spacer material and construction complying with the following requirements:
a. Spacer Material: Aluminum with mill or clear anodic finish
b. Desiccant: Molecular sieve or silica gel, or blend of both
c. Corner Construction: Manufacturer's standard corner construction.

2.3 ACCESSORIES

A. Elastomeric Glazing Sealants: Materials compatible with adjacent materials including glass, insulating glass seals, and glazing channels.
1. Silicone Glazing Sealant: ASTM C920, Type S, Grade NS, Class and Use suitable for glazing application indicated; single component; solvent curing; capable of water immersion without loss of properties; non-bleeding, non-staining, cured Shore A hardness of 15 to 25.
a. Color: As Selected from Manufacturers' standard
b. Structural Silicone: Furnish high-modulus structural silicone glazing materials where sealant bonds glass to substrate.
2. Polysulfide Glazing Sealant: ASTM C920, Type M, Grade NS, Class and Use suitable for glazing application indicated; two component; chemical curing, non-sagging type; cured Shore A hardness of 15 to 25.
a. Color: As Selected from Manufacturers' standard.
3. Polyurethane Glazing Sealant: ASTM C920, Type S, Grade NS, Class and Use suitable for glazing application indicated; single component, chemical curing, non-staining, non-bleeding, Shore A Hardness Range 20 to 35.

a. Color: As Selected from Manufacturers' standard.

4. Acrylic Sealant: ASTM C920, Type S, Grade NS, Class and Use suitable for glazing application indicated; single component, solvent curing, non-bleeding; cured Shore A hardness of 15 to 25.
   a. Color: As Selected from Manufacturers standard

B. Glazing Gaskets: ASTM C864, resilient neoprene, silicone, polyvinyl chloride extruded shape to suit glazing channel retaining slot.
1. Type: per glass Manufacturer recommendation
2. Color: As Selected from Manufacturers standard.

C. Pre-Formed Glazing Tape: Size to suit application.
1. Preformed butyl compound with integral resilient tube spacing device; 10 to 15 Shore A durometer hardness; coiled on release paper; black color.
   a. Type: per glass Manufacturer recommendation
   b. Butyl Corner Sealant: ASTM C920 single component non-skinning butyl compatible with glazing tape; color to match tape.
2. Glazing Tape: Closed cell polyvinyl chloride foam, coiled on release paper over adhesive on two sides, maximum water absorption by volume of 2 percent, designed for compression of 25 percent to effect an air barrier and vapor retarder seal.
   a. Type: per glass Manufacturer recommendation.

D. Setting Blocks: ASTM C864, EPDM, 80 to 90 Shore A durometer hardness, length of 0.1 inch for each square foot of glazing or minimum 4-inch x width of glazing rabbet space minus 1/16 inch x height to suit glazing method and pane weight and area.

E. Spacer Shims: ASTM C864, Neoprene, 50 to 60 Shore A durometer hardness, minimum 3 inch long x one half the height of glazing stop x thickness to suit application , self adhesive on one face.

F. Plastic Film: Low emissivity film.

2.4 SOURCE QUALITY CONTROL AND TESTS

A. Provide analysis of glass to Section 01400.

B. Provide shop inspection for safety and insulated glass.

C. Comply with ANSI Z97.1, ASTM E773, ASTM E546, and ASTM E576.

PART 3 - EXECUTION

3.1 EXAMINATION

A. Section 01300 - Administrative Requirements: Coordination and project conditions.

B. Verify openings for glazing are correctly sized and within acceptable tolerance.

C. Verify surfaces of glazing channels or recesses are clean, free of obstructions impeding moisture movement, weeps are clear, and ready to receive glazing.

D. Examine framing glazing, with Installer present, for compliance with the following:
   1. Manufacturing and installation tolerances, including those for size, squareness, and offsets at corners
   2. Presence and functioning of weep system
   3. Minimum required face or edge clearances
   4. Effective sealing between joints of glass-framing members.

E. Proceed with installation only after unsatisfactory conditions have been corrected.

3.2 PREPARATION

A. Clean contact surfaces with solvent and wipe dry.

B. Seal porous glazing channels or recesses with substrate compatible primer or sealer.

C. Prime surfaces scheduled to receive sealant.

3.3 INSTALLATION GLAZING, GENERAL

A. Perform installation in accordance with GANA Glazing Manual.
   1. Glazing Sealants: Comply with ASTM C1193.
   2. Fire Rated Openings: Comply with NFPA 80

B. Comply with combined written instructions of Manufacturers of glass, sealants, gaskets, and other glazing materials, unless more stringent requirements are indicated, including those in referenced glazing publications.

C. Glazing channel dimensions, provide necessary bite on glass, minimum edge and face clearances, and adequate sealant thicknesses, with reasonable tolerances. Adjust as required by Project conditions during installation.

D. Protect glass edges from damage during handling and installation. Remove damaged glass from Project site and legally dispose of off Project site. Damaged glass is glass with edge damage or other imperfections that, when installed, could weaken glass and impair performance and appearance.

E. Install setting blocks in sill rabbets, sized and located to comply with referenced glazing publications, unless otherwise required by glass Manufacturer. Set blocks in thin course of compatible sealant suitable for heel bead.

F. Do not exceed edge pressures stipulated by glass Manufacturers for installing glass lites.

G. Provide spacers for glass lites where length plus width is larger than 50 inches as follows:
   1. Locate spacers directly opposite each other on both inside and outside faces of glass. Install correct size and spacing to preserve required face clearances, unless

gaskets and glazing tapes are used that have demonstrated ability to maintain required face clearances and to comply with system performance requirements.

2. Provide 1/8-inch minimum bite of spacers on glass and use thickness equal to sealant width. With glazing tape, use thickness slightly less than final compressed thickness of tape.

H. Provide edge blocking where indicated or needed to prevent glass lites from moving sideways in glazing channel, as recommended in writing by glass Manufacturer and according to requirements in referenced glazing publications.

I. Set glass lites in each series with uniform pattern, draw, bow, and similar characteristics.

J. Where wedge-shaped gaskets are driven into one side of channel to pressurize sealant or gasket on opposite side, provide adequate anchorage so gasket cannot walk out when installation is subjected to movement.

K. Square cut wedge-shaped gaskets at corners and install gaskets in a manner recommended by gasket Manufacturer to prevent corners from pulling away; seal corner joints and butt joints with sealant recommended by gasket Manufacturer.

3.4 TAPE GLAZING

A. Position tapes on fixed stops so that, when compressed by glass, their exposed edges are flush with or protrude slightly above sightline of stops.

B. Install tapes continuously, but not necessarily in one continuous length. Do not stretch tapes to make them fit opening.

C. Cover vertical framing joints by applying tapes to heads and sills first and then to jambs. Cover horizontal framing joints by applying tapes to jambs and then to heads and sills.

D. Place joints in tapes at corners of opening with adjoining lengths butted together, not lapped. Seal joints in tapes with compatible sealant approved by tape Manufacturer.

E. Do not remove release paper from tape until just before each glazing unit is installed.

F. Apply heel bead of elastomeric sealant where indicated.

G. Center glass lites in openings on setting blocks and press firmly against tape by inserting dense compression gaskets formed and installed to lock in place against faces of removable stops. Start gasket applications at corners and work toward centers of openings.

H. Apply cap bead of elastomeric sealant over exposed edge of tape.

3.5 GASKET GLAZING (DRY)

A. Fabricate compression gaskets in lengths recommended by gasket Manufacturer to fit openings exactly, with allowance for stretch during installation.

B. Center glass lites in openings on setting blocks and press firmly against soft compression gasket by inserting dense compression gaskets formed and installed to lock in place against faces of removable stops. Start gasket applications at corners and work toward centers of openings. Compress gaskets to produce a weathertight seal without developing bending stresses in glass. Seal gasket joints with sealant recommended by gasket Manufacturer.

C. Install gaskets so they protrude past face of glazing stops.

3.6 FIELD QUALITY CONTROL

A. Section 01400 - Quality Requirements: Testing and Inspection Services and 01700 - Execution Requirements: Testing, adjusting, and balancing.

B. Monitor quality of glazing.

3.7 CLEANING

A. Section 01700 - Execution Requirements: Final cleaning.

B. Remove glazing materials from finish surfaces.

C. Remove labels after Work is complete.

D. Clean glass and adjacent surfaces.

3.8 PROTECTION OF INSTALLED CONSTRUCTION

A. Section 01700 - Execution Requirements: Protecting installed construction.

B. Protect exterior glass from damage immediately after installation by attaching crossed streamers to framing held away from glass. Do not apply markers to glass surface. Remove nonpermanent labels, and clean surfaces.

C. Protect glass from contact with contaminating substances resulting from construction operations.

D. Remove and replace glass that is broken, chipped, cracked, or abraded or that is damaged from natural causes, accidents, and vandalism, during construction period.

E. Wash glass on both exposed surfaces in each area of Project not more than four days before date scheduled for inspections that establish date of Substantial Completion. Wash glass as recommended in writing by glass Manufacturer.

3.9 SCHEDULE

A. Glazing Schedule:
1. Aluminum Windows: 1-inch (25-mm) thick insulating unit tinted glass.
2. Storefront: 1-inch (25-mm) thick insulating unit, tinted tempered glass.
3. Entrances: 1-inch (16-mm) thick insulating unit, tinted tempered glass.
4. Mirrors: 1/4-inch (6-mm) plate glass.
5. Doors: Tempered glass.

END OF SECTION

SECTION 09111

NON-LOAD-BEARING METAL FRAMING SYSTEM

PART 1 - GENERAL

1.1 SUMMARY

A. Section includes metal stud framing and accessories at interior and exterior locations.

B. Related Sections:
1. Section 05400 - Cold-Formed Metal Framing: Structural load bearing metal stud framing
2. Section 06114 - Wood Blocking and Curbing: Rough wood blocking within stud framing
3. Section 07260 - Vapor Retarders
4. Section 07270 - Air Barriers
5. Section 07213 - Batt Insulation: Insulation between framing members
6. Section 09260 - Gypsum Board Assemblies: Metal studs for partitioning.

1.2 REFERENCES

A. ASTM International:
1. ASTM A123/A123M - Standard Specification for Zinc (Hot-Dip Galvanized) Coatings on Iron and Steel Products
2. ASTM A591/A591M - Standard Specification for Steel Sheet, Electrolytic Zinc-Coated, for Light Coating Mass Applications
3. ASTM A653/A653M - Standard Specification for Steel Sheet, Zinc-Coated (Galvanized) or Zinc-Iron Alloy-Coated (Galvannealed) by the Hot-Dip Process
4. ASTM C645 - Standard Specification for Nonstructural Steel Framing Members
5. ASTM C754 - Standard Specification for Installation of Steel Framing Members to Receive Screw-Attached Gypsum Panel Products
6. ASTM C1002 - Standard Specification for Steel Drill Screws for the Application of Gypsum Panel Products or Metal Plaster Bases.

B. National Association of Architectural Metal Manufacturers:
1. NAAMM ML/SFA 540 - Lightweight Steel Framing Systems Manual.

C. SSPC: The Society for Protective Coatings:
1. SSPC Paint 20 - Zinc-Rich Primers (Type I - Inorganic and Type II - Organic).

1.3 SYSTEM DESCRIPTION

A. Exterior Wall: Metal stud framing system infill, with exterior sheathing specified in Section 09260, batt insulation specified in Section 07213, interior gypsum board specified in Section 09260.

B. Exterior Loads: Design and size components to withstand loads caused by positive and negative pressure of wind acting normal to plane of wall as calculated in accordance with building code.

C. Interior Walls: Metal stud framing system with batt type acoustic insulation specified in Section 07213, interior gypsum board specified in Section 09260.

D. Maximum Allowable Deflection: 1: 180 span for interior painted walls; L/720 span for exterior masonry and stucco back-up; L/360 for ceramic tile wall back up.

E. Wall System:
1. Design to provide for movement of components without damage, failure of joint seals, undue stress on fasteners, or other detrimental effects when subject to seasonal or cyclic day/night temperature ranges.
2. Design system to accommodate construction tolerances, deflection of building structural members, and clearances of intended openings.

1.4 SUBMITTALS

A. Section 01330 - Submittal Procedures: Submittal procedures.

B. Shop Drawings:
1. Indicate component details, stud layout, framed openings, anchorage to structure, type and location of fasteners, and accessories or items required of other related work.
2. Describe method for securing studs to tracks, and for blocking and reinforcement to framing connections.

C. Product Data: Submit data describing standard framing member materials and finish, product criteria, load charts, and limitations.

D. Manufacturer's Installation Instructions: Submit special procedures and perimeter conditions requiring special attention.

1.5 QUALITY ASSURANCE

A. Perform Work in accordance with ASTM C754.

B. Form, fabricate, install, and connect components in accordance with NAAMM ML/SFA 540.

C. Furnish framing materials in accordance with SSMA - Product Technical Information.

D. Maintain one copy of each document on site.

1.6 QUALIFICATIONS

A. Manufacturer: Company specializing in manufacturing products specified in this section with minimum three years documented experience.
1. Framing Manufacturer: Current member of Steel Stud Manufacturers Association.

B. Installer: Company specializing in performing Work of this section with minimum three years documented experience.

C. Design structural elements under direct supervision of Professional Engineer experienced in design of this Work and licensed in State of Texas.

1.7 MOCKUP

A. Section 01400 - Quality Requirements: Requirements for mockup.

B. Construct corner mockup, 10’ x 10’ x 10’, including stud wall framing including insulation, sheathing, window frame, and interior and exterior finish specified in other sections. Coordinate with installation of associated work of Sections 05500, 07260, 07260, and 09260.

C. Locate where directed by Architect/Engineer.

D. Incorporate accepted mockup as part of Work.

1.8 PRE-INSTALLATION MEETINGS

A. Section 01300 - Administrative Requirements: Pre-installation meeting.

B. Convene minimum two weeks prior to commencing work of this section.

1.9 COORDINATION

A. Section 01300 - Administrative Requirements: Coordination and project conditions.

B. Coordinate placement of components within stud framing system.

PART 2 - PRODUCTS

2.1 METAL FRAMING SYSTEM

A. Manufacturers:
1. Clark Steel Framing Systems
2. Dale / Incor
3. Dietrich Metal Framing
4. Steel Construction Systems
5. Substitutions: Section 01600 - Product Requirements.

2.2 COMPONENTS

A. Components: ASTM C645.

B. Studs: ASTM A653/A653M, non-load bearing rolled steel, channel shaped, punched for utility access, as follows:
1. Depth: 1-5/8, 2-1/2, 3-5/8, and 6 inches

2. Thickness: 20 gauge, minimal and heavier gauges per Manufacturer requirements for height and loads
3. Refer to structural drawings for additional stud gauges.

C. Runner Tracks: Same material and thickness as studs or heavier, bent leg retainer notched to receive studs.

D. Slip-Type slotted head track: Provide one of the following:
1. Deflection Track: Steel sheet top runner manufactured to prevent cracking of finishes applied to interior partition framing resulting from deflection of structure above; in thickness not less than indicated for studs and in width to accommodate depth of studs.
a. Standard leg 2 ½" with 1 ½" slot
2. Double-Runner System: ASTM C 645 top runners, inside runner with 2-inch-deep flanges in thickness not less than indicated for studs and fastened to studs, and outer runner sized to friction fit inside runner.

E. Furring and Bracing Members: Of same material as studs; thickness to suit purpose.

F. Fasteners: ASTM C1002, self drilling, self tapping screws.

G. Sheet Metal Backing: 1/8" thick cold rolled steel – in wall anchor plates galvanized steel for reinforcement of toilet accessories.

H. Anchorage Devices: Power actuated.

I. Acoustic Sealant: As specified in Section 07900.

J. Touch-Up Primer for Galvanized Surfaces: SSPC-Paint 20 Type II Organic zinc rich.

2.3 SHOP FINISHING

A. Studs, Tracks and Headers: Galvanize to G60 coating class.

B. Accessories: Same finish as framing members, G60 coating class.

PART 3 - EXECUTION

3.1 EXAMINATION

A. Section 01300 - Administrative Requirements: Coordination and project conditions.

B. Verify rough-in utilities are in proper location.

C. Examine areas and substrates, with Installer present, and including welded hollow-metal frames, and structural framing, for compliance with requirements and other conditions affecting performance.
1. Proceed with installation only after unsatisfactory conditions have been corrected.

3.2 INSTALLATION

A. Align and secure top and bottom runners at not more 24 inches oc.

B. Achieve air tight seal between runners and substrate with acoustic sealant in conjunction with Section 07270.

C. Achieve air tight seal between studs and adjacent vertical surfaces with acoustic sealant in conjunction with Section 07270.

D. Fit runners under and above openings; secure intermediate studs to same spacing as wall studs.

E. Install studs vertically at 16 inches oc.

F. Align stud web openings horizontally.

G. Secure studs to tracks using fastener method. Do not weld.

H. Stud splicing not permissible.

I. Fabricate corners using minimum of three studs.

J. Double stud at wall openings, door and window jambs, not more than 2 inches from each side of openings.

K. Brace stud framing system rigid.

L. Coordinate erection of studs with requirements of door frames and window frames; install supports and attachments.

M. Door Openings: Screw vertical studs at jambs to jamb anchor clips on door frames; install runner track section (for cripple studs) at head and secure to jamb studs.
   1. Install two studs at each jamb, unless otherwise indicated.
   2. Extend jamb studs through suspended ceilings and attach to underside of overhead structure.

N. Coordinate installation of wood bucks, anchors, and wood blocking with electrical and mechanical work to be placed within or behind stud framing.

O. Blocking: Secure blocking to studs. Install blocking for support of plumbing fixtures, toilet partitions, wall cabinets, toilet accessories and opening frames.

P. Refer to Drawings for indication of partitions extending to finished ceiling only and for partitions extending through ceiling to structure above. Maintain clearance under structural building members to avoid deflection transfer to studs. Install extended leg ceiling runners.

1. Slip-Type Head Joints: Where framing extends to overhead structural supports, install to produce joints at tops of framing systems that prevent axial loading of finished assemblies.

Q. Coordinate placement of insulation in stud spaces after stud frame erection.

3.3 INSTALLING SUSPENSION SYSTEMS

A. Install suspension system components in sizes and spacings as required, but not less than those required by referenced installation standards for assembly types and other assembly components indicated.

B. Isolate suspension systems from building structure where they abut or are penetrated by building structure to prevent transfer of loading imposed by structural movement.

C. Suspend hangers from building structure as follows:
1. Install hangers plumb and free from contact with insulation or other objects within ceiling plenum that are not part of supporting structural or suspension system.
   a. Splay hangers only where required to miss obstructions and offset resulting horizontal forces by bracing, countersplaying, or other equally effective means.
2. Where width of ducts and other construction within ceiling plenum produces hanger spacings that interfere with locations of hangers required to support standard suspension system members, install supplemental suspension members and hangers in the form of trapezes or equivalent devices.
   a. Size supplemental suspension members and hangers to support ceiling loads within performance limits established by referenced installation standards.
3. Wire Hangers: Secure by looping and wire tying, either directly to structures or to inserts, eye screws, or other devices and fasteners that are secure and appropriate for substrate, and in a manner that will not cause hangers to deteriorate or otherwise fail.
4. Flat Hangers: Secure to structure, including intermediate framing members, by attaching to inserts, eye screws, or other devices and fasteners that are secure and appropriate for structure and hanger, and in a manner that will not cause hangers to deteriorate or otherwise fail.
5. Do not attach hangers to steel roof deck.
6. Do not connect or suspend steel framing from ducts, pipes, or conduit.

3.4 ERECTION TOLERANCES

A. Section 01400 - Quality Requirements: Tolerances.

B. Maximum Variation From Indicated Position: 1/8 inch in 10 feet.

C. Maximum Variation From Plumb: 1/8 inch in 10 feet.

END OF SECTION

SECTION 09260

GYPSUM BOARD ASSEMBLIES

PART 1 - GENERAL

1.1 SUMMARY

A. Section includes gypsum board and joint treatment; gypsum sheathing; cementitious backer board; acoustic insulation; and textured finish.

B. Related Sections:
1. Section 05400 - Cold Formed Metal Framing
2. Section 06114 - Wood Blocking and Curbing: Wood blocking for support of fixtures
3. Section 07213 - Batt Insulation: Acoustic and Thermal insulation
4. Section 08310 - Access Doors and Panels: Metal access panels
5. Section 10800: Product requirements for frames for recessed washroom accessories for placement by this section.

1.2 REFERENCES

A. ASTM International:
1. ASTM C36 - Standard Specification for Gypsum Wallboard
2. ASTM C79/C79M - Standard Specification for Gypsum Sheathing Board
3. ASTM C442 - Standard Specification for Gypsum Backing Board and Coreboard
4. ASTM C475 - Standard Specification for Joint Compound and Joint Tape for Finishing Gypsum Board
5. ASTM C514 - Standard Specification for Nails for the Application of Gypsum Board
6. ASTM C557 - Standard Specification for Adhesives for Fastening Gypsum Wallboard to Wood Framing
7. ASTM C630/C630M - Standard Specification for Water-Resistant Gypsum Backing Board
8. ASTM C645 - Standard Specification for Nonstructural Steel Framing Members
9. ASTM C665 - Standard Specification for Mineral-Fiber Blanket Thermal Insulation for Light Frame Construction and Manufactured Housing
10. ASTM C754 - Standard Specification for Installation of Steel Framing Members to Receive Screw-Attached Gypsum Panel Products
11. ASTM C840 - Standard Specification for Application and Finishing of Gypsum Board
12. ASTM C931/C931M - Standard Specification for Exterior Gypsum Soffit Board
13. ASTM C1002 - Standard Specification for Steel Drill Screws for the Application of Gypsum Panel Products or Metal Plaster Bases
14. ASTM C1280 - Standard Specification for Application of Gypsum Sheathing
15. ASTM E90 - Standard Test Method for Laboratory Measurement of Airborne Sound Transmission Loss of Building Partitions and Elements
16. ASTM E119 - Standard Test Methods for Fire Tests of Building Construction and Materials.

B. Gypsum Association:
   1. GA 214 - Recommended Levels of Gypsum Board Finish
   2. GA 216 - Application and Finishing of Gypsum Board
   3. GA 600 - Fire Resistance Design Manual Sound Control.

C. Underwriters Laboratories Inc.:
   1. UL - Fire Resistance Directory.

D. Intertek Testing Services (Warnock Hersey Listed):
   1. WH - Certification Listings.

1.3 PERFORMANCE REQUIREMENTS

A. Conform to applicable code for fire rated assemblies in conjunction with Section 09111 as follows:
   1. Fire Rated Partitions: Listed assembly by UL
      a. 1 hour wall; UL No. U465
      b. 2 hour wall; UL No. U411
      c. 3 hour wall; UL No. U435.

B. Acoustic Attenuation for Interior Partitions: in accordance with ASTM E90.

1.4 SUBMITTALS

A. Section 01330 - Submittal Procedures: Submittal procedures.

B. Shop Drawings: Indicate special details associated with fireproofing and acoustic seals.

C. Product Data: Submit data on metal framing, gypsum board, joint tape, texture and acoustic accessories.

D. Samples: Submit two samples of gypsum board, 12 x 12 inch in size illustrating finish and texture.

E. Submit Manufacturer's installation instructions under provisions of Section 01340.

F. Coordinate this work with the installation of batt insulation and mechanical and electrical work which is to be placed at or within framing. Allow such items to be installed or incorporated, if required, before start of gypsum board installation.

G. Qualifications Data: For Installer of Gypsum Board products.

1.5 QUALITY ASSURANCE

A. Perform Work in accordance with ASTM C840 and ASTM C1280.

B. Maintain one copy of each document on site.

1.6 QUALIFICATIONS

A. Manufacturer: Company specializing in manufacturing products specified in this section with minimum three years documented experience.

B. Installer: Company specializing in performing Work of this section with minimum three years documented experience.

1.7 DELIVERY, STORAGE AND HANDLING

A. General: Comply with Section 01400 – Quality Requirements

B. Ordering: Comply with Manufacturer's ordering instructions and lead time requirements to avoid construction delays.

C. Packing, Shipping, Handling and Unloading: Per Manufacturer.

D. Delivery: Deliver materials in Manufacturer's original identification labels intact.

E. Storage and Protection: Store materials protected from exposure to harmful weather conditions and at temperature conditions recommended by Manufacturer. Store materials in clean, dry, sheltered area, off ground, until used. Stack panels flat to prevent sagging

1.8 MOCKUP

A. Section 01400 - Quality Requirements: Requirements for mockup.

B. Construct mock-up, including interior wall and ceiling system illustrating surface finish and texture.

C. Locate where directed by Architect/Engineer.

D. Incorporate accepted mockup as part of Work.

1.9 PRE-INSTALLATION MEETINGS

A. Section 01300 - Administrative Requirements: Pre-installation meeting.

B. Convene minimum two weeks prior to commencing work of this section.

PART 2 - PRODUCTS

2.1 GYPSUM BOARD ASSEMBLIES

A. Manufacturers:
1. Celotex Building Products
2. G-P Gypsum Corp.
3. National Gypsum Co.
4. United States Gypsum Co.
5. Substitutions: Section 01600 - Product Requirements.

2.2 COMPONENTS

A. Framing Materials:
1. Studs and Tracks: Per Section 09110
2. Furring, Framing, and Accessories: Specified in Section 09110
3. Fasteners: ASTM C1002
4. Anchorage to Substrate: Tie wire, screws, and other metal supports, of type and size to suit application; to rigidly secure materials in place.

B. Gypsum Board Materials:
1. Fire Rated Gypsum Board: ASTM C36; fire resistive type, UL or WH rated; 5/8 inch thick, maximum available length in place; ends square cut, tapered and beveled edges.
2. Moisture Resistant Gypsum Board: Fire Resistive Type, ASTM C630/C630M; 5/8 inch thick, maximum available length in place; ends square cut, tapered and beveled edges, square edges behind tile.
3. FIBEROCK® Brand Aqua-Tough™ Interior Panels
4. FIBEROCK® Brand VHI Abuse-Resistant Fiber-Reinforced Gypsum Interior Panels
5. Gypsum Backing Board: ASTM C442; fire rated type; 1/2 inch thick; V-grooved edges, ends square cut, maximum available size in place.
6. Gypsum Sheathing Board: ASTM C79/C79M; moisture resistant and fire resistant type; 5/8 inch thick, maximum available size in place; ends square cut, tongue and grooved edges; water repellent paper faces.
7. Cementitious Backing Board: ANSI A118.9; High density, glass fiber reinforced, ½ inch thick;
8. 2 inch wide, coated glass fiber tape for joints and corners.

2.3 ACCESSORIES

A. Acoustic Insulation: ASTM C665; See Section 07900

B. Acoustic Sealant: Non-hardening, non-skinning, for use in conjunction with gypsum board.

C. Interior Trim: ASTM C 1047.
1. Material: Galvanized or aluminum-coated steel sheet or rolled zinc.
2. Shapes:
   a. Cornerbead
   b. U-Bead: J-shaped; L-Bead; exposed short flange does not receive joint compound
   c. Expansion (control) joint.

D. Joint Materials: ASTM C475; reinforcing tape, joint compound, adhesive, and water. For each coat use formulation that is compatible with other compounds applied on previous or for successive coats.
1. Prefilling: At open joints and damaged surface areas, use setting-type taping compound.
2. Embedding and First Coat: For embedding tape and first coat on joints, fasteners, and trim flanges, use drying-type, all-purpose compound.

3. Fill Coat: For second coat, use drying-type, all-purpose compound.
4. Finish Coat: For third coat, use drying-type, all-purpose compound.

E. Textured Finish Materials: Latex based texturing material, containing fine aggregate, low / no V.O.C. type.

F. Fasteners: ASTM C1002, Type S12.

PART 3 - EXECUTION

3.1 EXAMINATION

A. Section 01300 - Administrative Requirements: Coordination and project conditions.

B. Verify site conditions are ready to receive work and opening dimensions are as instructed by Manufacturer.

3.2 INSTALLATION

A. Metal Stud Installation:
1. Install studs in accordance with ASTM C754.
2. Metal Stud Spacing: 16 inches on center.
3. Refer to Drawings for indication of partitions extending stud framing through ceiling to structure above. Maintain clearance under structural building members to avoid deflection transfer to studs. Provide extended leg ceiling runners.
4. Door Opening Framing: Install double studs at door frame jambs. Install stud tracks on each side of opening, at frame head height, and between studs and adjacent studs. Install control joints at door head.
5. Blocking: Bolt or screw steel channels to studs. Install blocking for support of plumbing fixtures, toilet partitions, wall cabinets, and toilet accessories.

B. Ceiling Framing Installation:
1. Install in accordance with ASTM C754.
2. Coordinate location of hangers with other work.
3. Install ceiling framing independent of walls, columns, and above ceiling work.
4. Reinforce openings in ceiling suspension system which interrupt main carrying channels or furring channels, with lateral channel bracing. Extend bracing minimum 24 inches past each end of openings.
5. Laterally brace entire suspension system.

C. Acoustic Accessories Installation:
1. Place acoustic insulation in partitions tight within spaces, around cut openings, behind and around electrical and mechanical items within or behind partitions, and tight to items passing through partitions.
2. Install acoustic sealant within partitions.

D. Gypsum Board Installation:
1. Install gypsum board in accordance with GA-216 and GA-600.

2. Erect single layer standard gypsum board in most economical direction, with ends and edges occurring over firm bearing.
3. Erect single layer fire rated gypsum board vertically, with edges and ends occurring over firm bearing.
4. Erect exterior gypsum sheathing in accordance with ASTM C1280, horizontally, with edges butted and ends occurring over firm bearing.
5. Use screws when fastening gypsum board to metal furring or framing.
6. Double Layer Applications: Secure second layer to first with fasteners. Place second layer perpendicular to first layer. Offset joints of second layer from joints of first layer.
7. Erect exterior gypsum soffit board perpendicular to supports, with staggered end joints over supports.
8. Treat cut edges and holes in moisture resistant gypsum board with sealant.
9. Place control joints consistent with lines of building spaces as required by gypsum board Manufacturer requirements.
10. Place corner beads at external corners. Use longest practical length. Place edge trim where gypsum board abuts dissimilar materials.
11. Install cementitious backing board over metal studs.

E. Joint Treatment:
1. Finish in accordance with GA-214 Level 4. Erect in accordance with Manufacturer's instructions.
2. Tape, fill, and sand exposed joints, edges, and corners to produce smooth surface ready to receive finishes.
3. Feather coats on to adjoining surfaces so that camber is maximum 1/32 inch.
4. Taping, filling, and sanding is not required at surfaces behind adhesive applied ceramic tile.

F. Texture Finish: Spray apply finish texture coating, light sand to orange peel finish.

3.3 ERECTION TOLERANCES

A. Section 01400 - Quality Requirements: Tolerances.

B. Maximum Variation of Finished Gypsum Board Surface from Flat Surface: 1/8 inch in 10 feet.

END OF SECTION

SECTION 09300

TILE

PART 1 - GENERAL

1.1 SUMMARY

A. Section includes ceramic tile for floor and wall applications; cementitious backer board as tile substrate; thresholds at door openings; and ceramic accessories.

B. Related Sections:
1. Section 03350 - Concrete Finishing: Troweling of floor slab for tile application
2. Section 07900 - Joint Sealers
3. Section 15410 - Plumbing Fixtures: Shower receptor.

1.2 REFERENCES

A. American National Standards Institute:
1. ANSI A108.1 - Installation of Ceramic Tile, A collection
2. ANSI A108.10 - Specifications for Installation of Grout in Tilework
3. ANSI A108.1A - Specifications for Installation of Ceramic Tile in the Wet-Set Method with Portland Cement Mortar
4. ANSI A108.1B - Specifications for Installation of Ceramic Tile on a Cured Portland Cement Mortar Setting Bed with Dry-Set or Latex Portland Cement Mortar
5. ANSI A108.1C - Specifications for Contractors Option: Installation of Ceramic Tile in the Wet-Set Method with Portland Cement Mortar -or- Installation of Ceramic Tile on a Cured Portland Cement Mortar Setting Bed with Dry-Set or Latex Portland Cement Mortar
6. ANSI A108.4 - Specifications for Ceramic Tile Installed with Organic Adhesives or Water-Cleanable Tile Setting Epoxy Adhesive
7. ANSI A108.5 - Specifications for Ceramic Tile Installed with Dry-Set Portland Cement Mortar or Latex-Portland Cement Mortar
8. ANSI A118.1 - Standard Specification for Dry-Set Portland Cement Mortar
9. ANSI A118.4 - Latex-Portland Cement Mortar
10. ANSI A118.6 - Ceramic Tile Grouts
11. ANSI A118.8 - Modified Epoxy Emulsion Mortar/Grout
12. ANSI A118.9 - Test Methods and Specifications for Cementitious Backer Units
13. ANSI A136.1 - Organic Adhesives for Installation of Ceramic Tile
14. ANSI A137.1 - Ceramic Tile.

B. Tile Council of America:
1. TCA - Handbook for Ceramic Tile Installation.

1.3 SUBMITTALS

A. Section 01330 - Submittal Procedures: Submittal procedures.

B. Shop Drawings: Indicate tile layout, patterns, color arrangement, perimeter conditions, junctions with dissimilar materials, control and expansion joints, thresholds, ceramic accessories, and setting details.

C. Samples for Initial Selection: For each type of tile and grout indicated. Include Samples of accessories involving color selection.

D. Product Data: Submit instructions for using grouts and adhesives.

E. Samples for Verification:
1. Full-size units of each type and composition of tile and for each color and finish required.
2. Stone thresholds in 6-inch lengths.

F. Samples: Submit mounted tile and grout on one plywood panels, illustrating pattern, color variations, and grout joint size variations.

G. Manufacturer's Certificate: Certify Products meet or exceed specified requirements.

H. Qualifications Data: For Installer of Tile products.

1.4 CLOSEOUT SUBMITTALS

A. Section 01700 - Execution Requirements: Closeout procedures.

B. Operation and Maintenance Data: Submit recommended cleaning methods, cleaning materials, stain removal methods, and polishes and waxes.

1.5 QUALITY ASSURANCE

A. Perform Work in accordance with TCA Handbook and ANSI A108 Series/A118 Series.

B. Source Limitations for Tile: Obtain all tile of same type and color or finish from one source or producer.

C. Obtain tile from same production run and of consistent quality in appearance and physical properties for each contiguous area.

D. Source Limitations for Setting and Grouting Materials: Obtain ingredients of a uniform quality for each mortar, adhesive, and grout component from a single Manufacturer and each aggregate from one source or producer.

E. Source Limitations for Other Products: Obtain each of the following products specified in this Section through one source from a single Manufacturer for each product:
1. Stone thresholds
2. Waterproofing
3. Joint sealants.

F. Maintain one copy of each document on site.

1.6 QUALIFICATIONS

A. Manufacturer: Company specializing in manufacturing products specified in this section with minimum three years documented experience.

B. Installer: Company specializing in performing Work of this section with minimum three years documented experience.

1.7 MOCKUP

A. Section 01400 - Quality Requirements: Requirements for mockup.

B. Construct tile mock-up, 4 feet long by 4 feet wide, with finish grout, and specified accessories.

C. Locate where directed by Architect/Engineer.

D. Incorporate accepted mockup as part of Work.

1.8 PRE-INSTALLATION MEETINGS

A. Section 01300 - Administrative Requirements: Pre-installation meeting.

B. Convene minimum two weeks prior to commencing work of this section.

1.9 DELIVERY, STORAGE, AND HANDLING

A. Section 01600 - Product Requirements: Product storage and handling requirements.

B. Protect adhesives and grouts from freezing or overheating.

C. Deliver and store packaged materials in original containers with seals unbroken and labels intact until time of use. Comply with requirement in ANSI A137.1 for labeling sealed tile packages.

D. Store tile and cementitious materials on elevated platforms, under cover, and in a dry location.

E. Store aggregates where grading and other required characteristics can be maintained and contamination avoided.

F. Store liquid latexes in unopened containers and protected from freezing.

G. Handle tile that has temporary protective coating on exposed surfaces to prevent coated surfaces from contacting backs or edges of other units. If coating does contact bonding surfaces of tile, remove coating from bonding surfaces before setting tile.

1.10 ENVIRONMENTAL REQUIREMENTS

A. Section 01600 - Product Requirements.

B. Do not install adhesives and grouts in unventilated environment.

C. Maintain ambient and substrate temperature of 50 degrees F during installation of mortar materials.

1.11 EXTRA MATERIALS

A. Section 01700 - Execution Requirements: Spare parts and maintenance products.

B. Furnish extra materials described below that match products installed and that are packaged with protective covering for storage and identified with labels describing contents.
1. Tile and Trim Units: Furnish quantity of full-size units equal to 3 percent of amount installed, for each type, composition, color, pattern, and size indicated.

PART 2 - PRODUCTS

2.1 TILE

A. Static Coefficient of Friction: For tile installed on walkway surfaces, provide products with the following values as determined by testing identical products per ASTM C 1028:
1. Level Surfaces: Minimum 0.6.

B. Manufacturers:
1. American Olean Tile Co.
2. Dal-Tile International
3. United States Ceramic Tile
4. Substitutions: Section 01600 - Product Requirements.

2.2 COMPONENTS

A. Ceramic Tile: ANSI A137.1, conforming to the following:
1. Moisture Absorption: 0 to 0.5 percent
2. Size: 2 x 2 x ¼ inch
3. Shape: Square
4. Edge: Cushioned
5. Surface Finish: Unglazed, Slip resistant
6. Color: As selected from Manufacturers standard, Price group 1 and 2
7. Pattern: submit pattern

B. Ceramic Wall Tile: ANSI A137.1, conforming to the following:
1. Moisture Absorption: 0.5 to 3.0 percent
2. Size: 4 x 4 x 5/16 inch
3. Shape: Square
4. Edge: Cushioned
5. Internal Corner: Coved
6. External Corner: Bull nosed
7. Surface Finish: Matte glazed
8. Color: As selected from Manufacturers standard, Price group 1 and 2

9. Pattern: 3 colors, submit pattern.

C. Base: Match floor tile for moisture absorption, surface finish, and color:
1. Length: 4 inch
2. Height: 4 inch
3. Top Edge: Cushioned
4. Internal Corner: Cove
5. External Corner: Bull nosed
6. Color: As selected from Manufacturers standard, Price group 1 and 2
7. Pattern: submit pattern.

D. Wainscot Cap: Match wall tile for moisture absorption, surface finish, and color, 4 x 8 inch, bull nosed top edge.

2.3 ACCESSORIES

A. Adhesive Materials:
1. Organic Adhesive: ANSI A136.1, thin-set bond type
   a. Type I Moisture Resistant
2. Epoxy Adhesive: ANSI A118.3, thin-set bond type
3. Tile Setting Adhesive: Elastomeric, waterproof, and liquid applied.

B. Mortar Materials:
1. Mortar Bed Materials: Portland cement, sand, latex additive, and water.
2. Mortar Bond Coat Materials:
   a. Latex-Portland Cement type: exceeds ANSI A118.4
   b. Prepackaged dry-mortar mix containing dry, redispersible, ethylene vinyl acetate additive to which only water must be added at Project site
   c. For wall applications, provide nonsagging mortar that complies with Paragraph F-4.6.1 in addition to the other requirements in ANSI A118.4.

C. Grout Materials: Polymer-Modified Tile Grout: ANSI A118.7, color as selected from Manufacturers' standard range.
1. Fortified Polymer Type: Ethylene vinyl acetate, in dry, redispersible form, prepackaged with other dry ingredients.
   a. Unsanded grout mixture for joints 1/8 inch and narrower
   b. Sanded grout mixture for joints 1/8 inch and wider.

D. Cleavage Membrane: 4 mil thick polyethylene film.

E. Reinforcing Mesh: 2 x 2 inch size weave of 16/16 wire size; welded fabric, galvanized.

F. Cementitious Backer Board: See section 09260.

G. Thresholds: Marble type, honed finish, size by full width of wall or frame opening, beveled both sides, radiused edges from bevel to vertical face.
1. Fabricate to sizes and profiles as required to provide transition between adjacent floor finishes.

2. Bevel edges at 1:2 slope, aligning lower edge of bevel with adjacent floor finish. Limit height of bevel to 1/2 inch or less, and finish bevel to match face of threshold.
3. Description: Uniform, fine- to medium-grained white stone with gray veining.

PART 3 - EXECUTION

3.1 EXAMINATION

A. Section 01300 - Administrative Requirements: Coordination and project conditions.

B. Verify surfaces are ready to receive work.

C. Examine substrates, areas, and conditions where tile will be installed, with Installer present, for compliance with requirements for installation tolerances and other conditions affecting performance of installed tile.
1. Verify that substrates for setting tile are firm; dry; clean; free of oil, waxy films, and curing compounds; and within flatness tolerances required by referenced ANSI A108 Series of tile installation standards for installations indicated.
2. Verify that installation of anchors, recessed frames, electrical and mechanical units of work, and similar items located in or behind tile has been completed before installing tile.
3. Verify that joints and cracks in tile substrates are coordinated with tile joint locations; if not coordinated, adjust joint locations in consultation with Architect.

D. Proceed with installation only after unsatisfactory conditions have been corrected.

3.2 PREPARATION

A. Protect surrounding work from damage.

B. Vacuum clean surfaces and damp clean.

C. Remove coatings, including curing compounds and other substances that contain soap, wax, oil, or silicone, that are incompatible with tile-setting materials.

D. Provide concrete substrates for tile floors installed with thin-set mortar that comply with flatness tolerances specified in referenced ANSI A108 Series of tile installation standards.
1. Fill cracks, holes, and depressions with trowelable leveling and patching compound according to tile-setting material Manufacturer's written instructions. Use product specifically recommended by tile-setting material Manufacturer.
2. Remove protrusions, bumps, and ridges by sanding or grinding. Level existing substrate surfaces to acceptable flatness tolerances.

E. Blending: For tile exhibiting color variations within ranges selected during Sample submittals, verify that tile has been factory blended and packaged so tile units taken from one package show same range of colors as those taken from other packages and

match approved Samples. If not factory blended, either return to Manufacturer or blend tiles at Project site before installing.

3.3 INSTALLATION, GENERAL

A. ANSI Tile Installation Standards: Comply with parts of ANSI A108 Series "Specifications for Installation of Ceramic Tile" that apply to types of setting and grouting materials and to methods indicated in ceramic tile installation schedules.

B. TCA Installation Guidelines: TCA's "Handbook for Ceramic Tile Installation." Comply with TCA installation methods indicated in ceramic tile installation schedules.

C. Extend tile work into recesses and under or behind equipment and fixtures to form complete covering without interruptions, unless otherwise indicated. Terminate work neatly at obstructions, edges, and corners without disrupting pattern or joint alignments.

D. Accurately form intersections and returns. Perform cutting and drilling of tile without marring visible surfaces. Carefully grind cut edges of tile abutting trim, finish, or built-in items for straight aligned joints. Fit tile closely to electrical outlets, piping, fixtures, and other penetrations so plates, collars, or covers overlap tile.

E. Jointing Pattern: Lay tile in grid pattern, unless otherwise indicated. Align joints when adjoining tiles on floor, base, walls, and trim are same size. Lay out tile work and center tile fields in both directions in each space or on each wall area. Adjust to minimize tile cutting. Provide uniform joint widths, unless otherwise indicated.
   1. For tile mounted in sheets, make joints between tile sheets same width as joints within tile sheets so joints between sheets are not apparent in finished work.

F. Expansion / Control Joints: Locate expansion joints and other sealant-filled joints, including control, contraction, and isolation joints, where indicated during installation of setting materials, mortar beds, and tile. Do not saw-cut joints after installing tiles.
   1. Locate joints in tile surfaces directly above joints in concrete substrates.
   2. Prepare joints and apply sealants to comply with requirements in Division 7 Section "Joint Sealants."
   3. Keep control joints free of adhesive or grout. Apply sealant to joints.

G. Grout tile to comply with requirements of the following tile installation standards:
   1. For ceramic tile grouts (latex-portland cement grouts), comply with ANSI A108.10.
   2. Allow tile to set for a minimum of 48 hours prior to grouting.

H. Where indicated, install cementitious backer units and treat joints to comply with ANSI A108.11 and Manufacturer's written instructions for type of application indicated.

3.4 WATERPROOFING AND CRACK-SUPPRESSION MEMBRANE INSTALLATION

A. Install waterproofing to comply with ANSI A108.13 and waterproofing Manufacturer's written instructions to produce waterproof membrane of uniform thickness bonded securely to substrate.

B. Install crack-suppression membrane to comply with Manufacturer's written instructions to produce membrane of uniform thickness bonded securely to substrate.

C. Do not install tile over waterproofing until waterproofing has cured and been tested to determine that it is watertight.

3.5 FLOOR TILE INSTALLATION

A. General: Install tile to comply with requirements in the Floor Tile Installation Schedule, including those referencing TCA installation methods and ANSI A108 Series of tile installation standards.
   1. For installations indicated below, follow procedures in ANSI A108 Series tile installation standards for providing 95 percent mortar coverage.
      a. Tile floors in wet areas
      b. Tile floors composed of rib-backed tiles.

B. Joint Widths: Install tile on floors with the following joint widths:
   1. Ceramic Mosaic Tile: 1/16 inch, verify per Manufacturers recommendation.

C. Stone Thresholds: Install stone thresholds at exposed tile edges and at locations indicated; set in same type of setting bed as abutting field tile, unless otherwise indicated.
   1. Set thresholds in latex-portland cement mortar for locations where mortar bed would otherwise be exposed above adjacent nontile floor finish.

D. Grout Sealer: Apply grout sealer to grout joints according to grout-sealer Manufacturer's written instructions. As soon as grout sealer has penetrated grout joints, remove excess sealer and sealer that has gotten on tile faces by wiping with soft cloth.

3.6 WALL TILE INSTALLATION

A. Install types of tile designated for wall installations to comply with requirements in the Wall Tile Installation Schedule, including those referencing TCA installation methods and ANSI setting-bed standards.

B. Form internal angles square and external angles bull nosed.

C. Sound tile after setting. Replace hollow sounding units.

D. Joint Widths: Install tile on walls with the following joint widths: As per tile Manufacturers recommendation;
   1. Ceramic Mosaic Tile: 1/16 inch
   2. Glazed Wall Tile: 1/16 inch.

3.7 CLEANING AND PROTECTING

A. Section 01700 - Execution Requirements: Final cleaning.

B. Cleaning: On completion of placement and grouting, clean all ceramic tile surfaces so they are free of foreign matter.

1. Remove latex-portland cement grout residue from tile as soon as possible.
2. Clean grout smears and haze from tile according to tile and grout Manufacturer's written instructions, but no sooner than 10 days after installation. Use only cleaners recommended by tile and grout Manufacturers and only after determining that cleaners are safe to use by testing on samples of tile and other surfaces to be cleaned. Protect metal surfaces and plumbing fixtures from effects of cleaning. Flush surfaces with clean water before and after cleaning.
3. Remove temporary protective coating by method recommended by coating Manufacturer that is acceptable to tile and grout Manufacturer. Trap and remove coating to prevent it from clogging drains.

C. When recommended by tile Manufacturer, apply coat of neutral protective cleaner to completed tile walls and floors. Protect installed tile work with kraft paper or other heavy covering during construction period to prevent staining, damage, and wear.

D. Prohibit foot and wheel traffic from tiled floors for at least seven days after grouting is completed.

E. Before final inspection, remove protective coverings and rinse neutral cleaner from tile surfaces.

3.8 FLOOR TILE INSTALLATION SCHEDULE

A. Tile Installation FTI-1: Interior floor installation on waterproof and crack-suppression membrane over concrete; thin-set mortar; TCA F122 and ANSI A108.5.
   1. Tile Type: Unglazed ceramic mosaic tile
   2. Thin-Set Mortar: Latex-portland cement mortar
   3. Grout: Polymer-modified unsanded grout.

3.9 WALL TILE INSTALLATION SCHEDULE

A. Tile Installation WTI-1: Interior wall installation over gypsum board on metal studs; thin-set mortar; TCA W242 and ANSI A108.4.
   1. Tile Type: Glazed wall tile
   2. Thin-Set Mortar: Organic Adhesive
   3. Grout: Polymer-modified unsanded grout.

B. Tile Installation WTI-2: Interior wall installation over cementitious backer units; organic adhesive; TCA W244 and ANSI A108.5.
   1. Tile Type: Glazed wall tile
   2. Thin-Set Mortar: Organic Adhesive
   3. Grout: Polymer-modified unsanded grout or silicone rubber grout, per Manufacturers' recommendation for wet areas.

3.10 SCHEDULES

END OF SECTION

SECTION 09510

ACOUSTICAL CEILINGS

PART 1 - GENERAL

1.1 SUMMARY

A. Section includes suspended metal grid ceiling system and perimeter trim; acoustic tile.; and supplementary acoustic insulation over system units.

B. Related Sections:
1. Section 07213 - Batt Insulation
2. Section 07900 - Joint Sealers
3. Section 08310 - Access Doors and Panels: Access panels
4. Section 15850 - Air Outlets and Inlets: Air diffusion devices in ceiling system
5. Section 16510 - Interior Luminaries: Light fixtures in ceiling system
6. Section 16821 - Public Address and Music Equipment: Speakers in ceiling system.

1.2 REFERENCES

A. ASTM International:
1. ASTM C635 - Standard Specification for the Manufacture, Performance, and Testing of Metal Suspension Systems for Acoustical Tile and Lay-in Panel Ceilings
2. ASTM C636 - Standard Practice for Installation of Metal Ceiling Suspension Systems for Acoustical Tile and Lay-In Panels
3. ASTM E1264 - Standard Classification for Acoustical Ceiling Products.

B. Ceilings and Interior Systems Construction Association:
1. CISCA - Acoustical Ceilings: Use and Practice.

C. Underwriters Laboratories Inc.:
1. UL - Fire Resistance Directory.

D. Intertek Testing Services (Warnock Hersey Listed):
1. WH - Certification Listings.

1.3 PERFORMANCE REQUIREMENTS

A. Suspension System: Rigidly secure acoustic ceiling system including integral mechanical and electrical components with maximum deflection of 1: 360.

1.4 SUBMITTALS

A. Section 01330 - Submittal Procedures: Submittal procedures.

B. Coordination Drawings: Reflected ceiling plans, drawn to scale, on which the following items are shown and coordinated with each other, based on input from installers of the items involved:
   1. Ceiling suspension system members.
   2. Method of attaching hangers to building structure:
      a. Furnish layouts for anchors, clips, and other ceiling attachment devices whose installation is specified in other Sections.
   3. Ceiling-mounted items including lighting fixtures, diffusers, grilles, speakers, sprinklers, access panels, and special moldings.
   4. Minimum Drawing Scale: 1/8 inch = 1 foot.

C. Samples for Initial Selection: For components with factory-applied color finishes.

D. Product Data: Submit data on metal grid system components and acoustic units.

E. Samples for Verification: For each component indicated and for each exposed finish required, prepared on Samples of size indicated below.
   1. Acoustical Panel: Set of 6-inch- square Samples of each type, color, pattern, and texture.
   2. Exposed Suspension System Members, Moldings, and Trim: Set of 12-inch-long Samples of each type, finish, and color.

F. Product Test Reports: Based on evaluation of comprehensive tests performed by a qualified testing agency, for each acoustical panel ceiling.

G. Research/Evaluation Reports: For each acoustical panel ceiling and components.

H. Maintenance Data: For finishes to include in maintenance manuals.

I. Qualification Data: For Installer of acoustical ceiling.

1.5 QUALITY ASSURANCE

A. Conform to CISCA requirements.

B. Source Limitations: Obtain each type of acoustical ceiling panel and supporting suspension system through one source from a single Manufacturer.

C. Maintain one copy of each document on site.

1.6 QUALIFICATIONS

A. Manufacturer: Company specializing in manufacturing products specified in this section with minimum three years documented experience.

B. Installer: Company specializing in performing Work of this section with minimum three years documented experience.

1.7 DELIVERY, STORAGE, AND HANDLING

A. Section 01600 - Product Requirements: Product storage and handling requirements.

B. Deliver acoustical panels, suspension system components, and accessories to Project site in original, unopened packages and store them in a fully enclosed, conditioned space where they will be protected against damage from moisture, humidity, temperature extremes, direct sunlight, surface contamination, and other causes.

C. Before installing acoustical panels, permit them to reach room temperature and a stabilized moisture content.

D. Handle acoustical panels carefully to avoid chipping edges or damaging units in any way.

1.8 MOCKUP

A. Section 01400 - Quality Requirements: Requirements for mockup.

B. Construct mock-up, 12 feet x 12 feet, including typical field and edge conditions.

C. Locate where directed by Architect/Engineer.

D. Incorporate accepted mockup as part of Work.

1.9 PRE-INSTALLATION MEETINGS

A. Section 01300 - Administrative Requirements: Pre-installation meeting.

B. Convene minimum two weeks prior to commencing work of this section.

1.10 ENVIRONMENTAL REQUIREMENTS

A. Section 01600 - Product Requirements.

B. Environmental Limitations: Do not install acoustical panel ceilings until spaces are enclosed and weatherproof, wet work in spaces is complete and dry, work above ceilings is complete, and ambient temperature and humidity conditions are maintained at the levels indicated for Project when occupied for its intended use.

C. Maintain uniform temperature of minimum 60 degrees F and maximum humidity of 40 percent prior to, during, and after acoustic unit installation.

1.11 SEQUENCING

A. Section 0110 - Summary: Work sequence.

B. Sequence Work to ensure acoustic ceilings are not installed until building is enclosed, sufficient heat is provided, dust generating activities have terminated, and overhead work is completed, tested, and approved.

C. Install acoustic units after interior wet work is dry.

D. Coordinate layout and installation of acoustical panels and suspension system with other construction that penetrates ceilings or is supported by them, including light fixtures, HVAC equipment, and partition assemblies.

1.12 EXTRA MATERIALS

A. Section 01700 - Execution Requirements: Spare parts and maintenance products.

B. Acoustical Ceiling Panels: Full-size panels equal to 3 percent of quantity installed.

C. Suspension System Components: Quantity of each exposed component equal to 2.0 percent of quantity installed.

D. Hold-Down Clips: Equal to 2.0 percent of quantity installed.

PART 2 - PRODUCTS

2.1 ACOUSTICAL PANELS, GENERAL

A. Acoustical Panel Standard: Provide Manufacturer's standard panels of configuration indicated that comply with ASTM E 1264 classifications as designated by types, patterns, acoustical ratings, and light reflectance, unless otherwise indicated.
   1. Mounting Method for Measuring NRC: Type E-400; plenum mounting in which face of test specimen is 15-3/4 inches away from test surface per ASTM E 795.

B. Acoustical Panel Colors and Patterns: Match appearance characteristics indicated for each product type.
   1. Where appearance characteristics of acoustical panels are indicated by referencing pattern designations in ASTM E 1264 and not Manufacturers' proprietary product designations, provide products selected by Architect from each Manufacturer's full range that comply with requirements indicated for type, pattern, color, light reflectance, acoustical performance, edge detail, and size.

C. Antimicrobial Fungicide Treatment: Provide acoustical panels with face and back surfaces coated with antimicrobial treatment consisting of Manufacturer's standard formulation with fungicide added to inhibit growth of mold and mildew and showing no mold or mildew growth when tested according to ASTM D 3273 and evaluated according to ASTM D 3274 or ASTM G 21.

2.2 SUSPENDED ACOUSTICAL CEILINGS

A. Manufacturers:
1. Armstrong World Industries, Fissured, Square Lay-in.
2. Celotex Building Products, Fissured, Square Lay-in.
3. USG Interiors, Fissured, Square Lay-in.
4. Substitutions: Section 01600 - Product Requirements.

2.3 SUSPENDED ACOUSTICAL CEILINGS COMPONENTS

A. Acoustic Panels: ASTM E1264, conforming to: Type III, Form 2, Pattern C D
1. Size: 24 x 24 inches
2. Thickness: 5/8 inches
3. Composition: Mineral
4. Density: .70 lb/cu ft
5. Light Reflectance: 80 percent
6. NRC Range: 50 to 60
7. STC Range: 35 to 39
8. Fire Hazard Classification: Class A Flame Spread 25 and smoke per ASTM E84
9. Edge: Square
10. Surface Color: White
11. Surface Finish: Non-directional fissured
12. Antimicrobial Treatment: Fungicide based.

2.4 METAL SUSPENSION SYSTEMS, GENERAL

A. Metal Suspension System Standard: Provide Manufacturer's standard direct-hung metal suspension systems of types, structural classifications, and finishes indicated that comply with applicable requirements in ASTM C 635.

B. Finishes and Colors, General: Comply with NAAMM's "Metal Finishes Manual for Architectural and Metal Products" for recommendations for applying and designating finishes. Provide Manufacturer's standard factory-applied finish for type of system indicated.
1. High-Humidity Finish: Comply with ASTM C 635 requirements for "Coating Classification for Severe Environment Performance" where high-humidity finishes are indicated.

C. Attachment Devices: Size for five times the design load indicated in ASTM C 635, Table 1, "Direct Hung," unless otherwise indicated. Comply with seismic design requirements.

D. Wire Hangers, Braces, and Ties: Provide wires complying with the following requirements:
1. Zinc-Coated, Carbon-Steel Wire: ASTM A 641/A 641M, Class 1 zinc coating, soft temper.
2. Size: Select wire diameter so its stress at 3 times hanger design load (ASTM C 635, Table 1, "Direct Hung") will be less than yield stress of wire, but provide not less than 0.106-inch- diameter wire.

E. Hold-Down Clips: Provide Manufacturer's standard hold-down clips spaced 24 inches o.c. on all cross tees.

2.5 METAL SUSPENSION SYSTEM FOR ACOUSTICAL PANEL CEILING

A. Products: Subject to compliance with requirements, provide one of the following:
1. Armstrong World Industries, Inc.; Prelude, 15/16" Face
2. USG Interiors, Inc.; DX, Exposed 15/16" Face
3. Substitutions: Section 01600 - Product Requirements.

B. Grid:
1. Non-fire Rated Grid: ASTM C635, intermediate; exposed T; components die cut and interlocking
2. Grid Materials: Commercial quality cold rolled steel with galvanized coating.
3. Exposed Grid Surface Width: 15/16 inch
4. Grid Finish: White color as selected
5. Accessories: Stabilizer bars, clips, splices, perimeter moldings, and hold down clips required for suspended grid system
6. Support Channels and Hangers: Galvanized steel; size and type to suit application, and ceiling system flatness requirement specified.

2.6 ACCESSORIES

A. Acoustic Batt Insulation: Specified in Section 07213, un-faced; 2 inch thick, where noted on documents.

B. Gypsum Board: Fire rated type; specified in Section 09260.

C. Acoustic Sealant For Perimeter Moldings: Specified in Section 07900.
1. Acoustical Sealant for Exposed and Concealed Joints: Manufacturer's standard nonsag, paintable, nonstaining latex sealant complying with ASTM C 834 and effective in reducing airborne sound transmission through perimeter joints and openings in building construction as demonstrated by testing representative assemblies according to ASTM E 90.

D. Gasket for Perimeter Moldings: Closed cell rubber sponge tape.

E. Touch-up Paint: Type and color to match acoustic and grid units.

PART 3 - EXECUTION

3.1 EXAMINATION

A. Section 01300 - Administrative Requirements: Coordination and project conditions.

B. Verify layout of hangers will not interfere with other work.

C. Examine substrates, areas, and conditions, including structural framing to which acoustical panel ceilings attach or abut, with Installer present, for compliance with requirements specified in this and other Sections that affect ceiling installation and anchorage and with requirements for installation tolerances and other conditions affecting performance of acoustical panel ceilings.
   1. Proceed with installation only after unsatisfactory conditions have been corrected.

3.2 INSTALLATION

A. Lay-In Grid Suspension System: General
   1. Install suspension system in accordance with ASTM C636, per Manufacturer's written instructions and CISCA's "Ceiling Systems Handbook."
   2. Install system capable of supporting imposed loads to deflection of 1/360 maximum.
   3. Locate system on room axis according to reflected plan.
   4. Install after major above ceiling work is complete. Coordinate location of hangers with other work.

B. Suspend ceiling hangers from building's structural members and as follows:
   1. Install hangers plumb and free from contact with insulation or other objects within ceiling plenum that are not part of supporting structure or of ceiling suspension system.
   2. Splay hangers only where required to miss obstructions; offset resulting horizontal forces by bracing, countersplaying, or other equally effective means.
   3. Where width of ducts and other construction within ceiling plenum produces hanger spacings that interfere with location of hangers at spacings required to support standard suspension system members, install supplemental suspension members and hangers in form of trapezes or equivalent devices.
   4. Secure wire hangers to ceiling suspension members and to supports above with a minimum of three tight turns. Connect hangers directly either to structures or to inserts, eye screws, or other devices that are secure and appropriate for substrate and that will not deteriorate or otherwise fail due to age, corrosion, or elevated temperatures.
   5. When steel framing does not permit installation of hanger wires at spacing required, install carrying channels or other supplemental support for attachment of hanger wires.
   6. Do not attach hangers to steel roof deck. Attach hangers to structural members.
   7. Hang suspension system independent of walls, columns, ducts, pipes and conduit.
   8. Space hangers not more than 48 inches o.c. along each member supported directly from hangers, unless otherwise indicated; provide hangers not more than 8 inches from ends of each member.
   9. Size supplemental suspension members and hangers to support ceiling loads within performance limits established by referenced standards and publications. Do not support components on main runners or cross runners when weight causes total dead load to exceed deflection capability.

C. Secure bracing wires to ceiling suspension members and to supports with a minimum of four tight turns. Suspend bracing from building's structural members as required for hangers, without attaching to metal roof deck.

D. Install suspension system runners so they are square and securely interlocked with one another. Remove and replace dented, bent, or kinked members.

E. Perimeter Molding:
   a. Install edge molding at intersection of ceiling and vertical surfaces into bed of acoustic sealant or with continuous gasket.
   b. Use longest practical lengths.
   c. Miter and rivet corners.
   d. Install at junctions with other interruptions.
2. Form expansion joints. Form to accommodate plus or minus 1 inch movement. Maintain visual closure.

F. Acoustic Units:
1. Fit acoustic units in place, free from damaged edges or other defects detrimental to appearance, function, and fit accurately into suspension system runners and edge moldings. Scribe and cut panels at borders and penetrations to provide a neat, precise fit.
2. Lay directional patterned units one way, as noted on documents. Fit border trim neatly against abutting surfaces.
3. Install units after above ceiling work is complete.
4. Install acoustic units level, in uniform plane, and free from twist, warp, and dents.
5. Cutting Acoustic Units:
   a. Cut to fit irregular grid and perimeter edge trim.
   b. Paint cut edges of panel remaining exposed after installation; match color of exposed panel surfaces using coating recommended in writing for this purpose by acoustical panel Manufacturer
6. Lay acoustic insulation for distance of 48 inches on both sides of acoustic partitions as indicated on Drawings.
7. Install hold-down clips to retain panels tight to grid system within 20 ft of exterior door and in areas indicated; space as recommended by panel Manufacturer's written instructions, unless otherwise indicated

3.3 ERECTION TOLERANCES

A. Section 01400 - Quality Requirements: Tolerances.

B. Maximum Variation from Flat and Level Surface: 1/8 inch in 10 feet.

C. Maximum Variation from Plumb of Grid Members Caused by Eccentric Loads: 2 degrees.

3.4 CLEANING

A. Clean exposed surfaces of acoustical panel ceilings, including trim, edge moldings, and suspension system members. Comply with Manufacturer's written instructions for cleaning and touchup of minor finish damage. Remove and replace ceiling components that cannot be successfully cleaned and repaired to permanently eliminate evidence of damage.

END OF SECTION

SECTION 09546

LINEAR METAL CEILINGS

PART 1 - GENERAL

1.1 SUMMARY

A. Section includes suspended metal grid ceiling system and perimeter trim; linear, formed metal soffit panels.

B. Related Sections:
1. Section 08310 - Access Doors and Panels: Access panels.

1.2 REFERENCES

A. ASTM International:
1. ASTM A653/A653M - Standard Specification for Steel Sheet, Zinc-Coated (Galvanized) or Zinc-Iron Alloy-Coated (Galvannealed) by the Hot-Dip Process.
2. ASTM A666 - Standard Specification for Austenitic Stainless Steel Sheet, Strip, Plate, and Flat Bar
3. ASTM B209 - Standard Specification for Aluminum and Aluminum-Alloy Sheet and Plate
4. ASTM B221 - Standard Specification for Aluminum and Aluminum-Alloy Extruded Bars, Rods, Wire, Profiles, and Tubes
5. ASTM C636 - Standard Practice for Installation of Metal Ceiling Suspension Systems for Acoustical Tile and Lay-In Panels.

1.3 PERFORMANCE REQUIREMENTS

A. Exterior Soffit and Suspension System: Resist wind uplift in accordance with applicable code without damage.

1.4 SUBMITTALS

A. Section 01330 - Submittal Procedures: Submittal procedures.

B. Shop Drawings: Indicate ceiling and soffit system reflected plan, location of mechanical and electrical components, details of junction with dissimilar materials, and points of suspension.

C. Product Data: Submit data for component profiles, materials, perimeter and integral trim, and space closures. Performance characteristics.

D. Samples: Submit two samples in size illustrating color and finish of exposed to view components.

E. Manufacturer’s Certificate: Certify products meet or exceed specified requirements.

1.5 QUALITY ASSURANCE

A. Products Requiring Electrical Connection: Listed and classified by Underwriters' Laboratories, Inc.

1.6 QUALIFICATIONS

A. Manufacturer: Company specializing in manufacturing products specified in this section with minimum three years experience.

B. Installer: Company specializing in performing Work of this section with minimum three years experience.

1.7 PRE-INSTALLATION MEETINGS

A. Section 01300 - Administrative Requirements: Pre-installation meeting.

B. Convene minimum two weeks prior to commencing work of this section.

1.8 DELIVERY, STORAGE, AND HANDLING

A. Section 01600 - Product Requirements: Product storage and handling requirements.

B. Accept factory-finished products on site in Manufacturer's unopened factory packaging only; reject opened packages.

C. Protect factory-finished products from damage to appearance by storing products in Manufacturer's unopened factory packaging in dry storage area.

1.9 COORDINATION

A. Section 01300 - Administrative Requirements: Coordination and project conditions.

B. Coordinate Work of this section with installation of mechanical and electrical components and with other construction activities affected by Work of this section.

C. Supply hanger clips during steel deck erection. Supply additional hangers and inserts as required.

1.10 WARRANTY

A. Section 01700 - Execution Requirements: Product warranties and product bonds.

B. Furnish five year Manufacturer warranty; include coverage for corrosion resistance and discoloration of surface finish.

1.11 EXTRA MATERIALS

A. Section 01700 - Execution Requirements: Spare parts and maintenance products.

B. Supply two standard lengths linear ceiling panels.

PART 2 - PRODUCTS

2.1 LINEAR METAL CEILING SYSTEM

A. Manufacturers:
1. Chicago Metallic Corp.
2. Armstrong World Industries, Inc.
3. Hunter Douglas Architectural Products Inc.
4. Substitutions: Section 01600 - Product Requirements.

2.2 COMPONENTS

A. Panels: Steel sheet, ASTM A653/A653M, galvanized with G90 zinc coating.
1. Profile: Channel forming module
2. Edge: Square, Vector for interface with compatible grid
3. Length: 2 x 4
4. Sight-Exposed Surface Finish: Enamel finish; from Manufacturer's standard range, as selected to match metal building soffit color.

B. Edge Molding and Splices: Same material, thickness, and finish as linear panels.

C. End Caps: Formed metal; same color and finish as sight-exposed surfaces of linear panels.

D. Accessories: Stabilizer bars, clips, hold down clips, and accessories as required for suspended grid system; sight-exposed surfaces same color and finish as sight-exposed surfaces of linear panels.

E. Suspension Members: Formed steel sections, with integral attachment points; galvanized finish; size and type to suit application and ceiling system flatness requirement specified.

F. Subgirt Members: ASTM A653/A653M, galvanized with G90 zinc coating, formed to resist imposed loads and to provide attachment for linear panels and accessories.

G. Access Panel: Furnish matching hinged panel with frameless appearance, swinging downward, with spring latch;

H. Touch-up Paint for Concealed Items: Zinc rich type.

2.3 FABRICATION

A. Shop cut linear panels to accommodate mechanical and electrical items.

B. Form internal and external corners of same material, thickness, finish, and profile to match exposed linear panels; back brace internal corners.

PART 3 - EXECUTION

3.1 EXAMINATION

A. Section 01300 - Administrative Requirements: Coordination and project conditions.

B. Verify layout of hangers do not interfere with other work.

C. Verify required utilities are available, in proper location, and ready for use.

D. Verify field measurements are as indicated on shop drawings and instructed by Manufacturer.

3.2 INSTALLATION

A. Suspension Components: Install after above soffit work is complete in accordance with ASTM C636 and ASTM E580.
   1. Hang carrying members independent of walls, columns, ducts, light fixtures, pipe, and conduit; where carrying members are spliced, avoid visible displacement of face panels with adjacent panels.
   2. Where ducts or other equipment prevent regular spacing of hangers, reinforce nearest adjacent hangers to span required distance.
   3. Locate suspension system for linear panel layout as indicated on Drawings.

B. Linear Panels: Align end joints.
   1. Set exterior end joints with 1/16 inch gap for expansion and contraction.
   2. Install recessed space closures between linear panels at exterior locations.
   3. Install edge moldings at intersections of soffit junctions with other finishes, and at vertical surfaces; use maximum piece lengths.
   4. Install end caps at sight-exposed ends of linear panels.
   5. Field miter corners and / or Install prefabricated corner sections.
   6. Exercise care when site cutting sight-exposed finished components to ensure surface finish is not defaced.

3.3 ERECTION TOLERANCES

A. Section 01400 - Quality Requirements: Tolerances.

B. Maximum Variation from Flat and Level Surface: 1/8 inch in 10 feet.

C. Maximum Variation from Plumb of Grid Members Caused by Eccentric Loads: 2 degrees.

D. Maximum Variation From Dimensioned Position: 1/4 inch.

3.4 CLEANING

A. Section 01700 - Execution Requirements: Final cleaning.

B. Remove protective coating or film.

C. Clean surfaces.

D. Replace damaged or abraded components.

END OF SECTION

SECTION 09650

RESILIENT FLOORING

PART 1 - GENERAL

1.1 SUMMARY

A. Section includes resilient tile flooring and resilient base.

1.2 REFERENCES

A. ASTM International:
1. ASTM E84 - Standard Test Method for Surface Burning Characteristics of Building Materials
2. ASTM E662 - Standard Test Method for Specific Optical Density of Smoke Generated by Solid Materials
3. ASTM F1066 - Standard Specification for Vinyl Composition Floor Tile
4. ASTM F1344 - Standard Specification for Rubber Floor Tile
5. ASTM F1861 - Standard Specification for Resilient Wall Base.

B. Federal Specification Unit:
1. FS L-F-475 - Floor Covering Vinyl, Surface (Tile and Roll), with Backing.

1.3 PERFORMANCE REQUIREMENTS

A. Conform to applicable code for fire performance ratings as follows:
1. Flooring, critical radiant flux (CRF): Minimum 0.45 watt per square centimeter, per ASTM E 648
2. Flooring, smoke developed: Maximum 450, per ASTM E662
3. Wall base, flame spread: Maximum 75, per ASTM E84
4. Wall base, smoke developed: Maximum 450, per ASTM E84.

B. Source Limitations for Tile: Obtain all tile of same type and color or finish from one source or producer.

C. Obtain tile from same production run and of consistent quality in appearance and physical properties for each contiguous area.

1.4 SUBMITTALS

A. Section 01330 - Submittal Procedures: Submittal procedures.

B. Product Data: Submit data describing physical and performance characteristics; including sizes, patterns and colors available; and installation instructions.

C. Samples:
1. Submit Manufacturer's complete set of color samples for initial selection.

2. Submit two samples, 4 x 4 inch in size illustrating color and pattern for each resilient flooring product specified.

D. Manufacturer's Certificate: Certify Products meet or exceed specified requirements.

E. Qualifications Data: For Installer of Tile products.

1.5 CLOSEOUT SUBMITTALS

A. Section 01700 - Execution Requirements: Closeout procedures.

B. Operation and Maintenance Data: Submit maintenance procedures, recommended maintenance materials, and suggested schedule for cleaning, stripping, and re-waxing.

1.6 QUALIFICATIONS

A. Manufacturer: Company specializing in manufacturing products specified in this section with minimum three years documented experience.

B. Installer: Company specializing in performing Work of this section with minimum three years documented experience.

1.7 DELIVERY, STORAGE, AND HANDLING

A. Section 01600 - Product Requirements: Product storage and handling requirements.

B. Protect roll materials from damage by storing per Manufacturers recommendation.

C. Store resilient products and installation materials in dry spaces protected from the weather, with ambient temperatures maintained within range recommended by Manufacturer, but not less than 50 deg F or more than 90 deg F. Store tiles on flat surfaces.

1.8 ENVIRONMENTAL REQUIREMENTS

A. Section 01600 - Product Requirements.

B. Maintain temperature in storage area between 55 degrees F and 90 degrees F.

C. Store materials for not less than 48 hours prior, during and after installation in area of installation at temperature of 70 degrees F to achieve temperature stability. Thereafter, maintain conditions above 55 degrees F and not more than 90 degrees F.

D. Close spaces to traffic during floor covering installation.

E. Close spaces to traffic for 48 hours after floor covering installation.

F. Install resilient products after other finishing operations, including painting, have been completed.

1.9 EXTRA MATERIALS

A. Section 01700 - Execution Requirements: Spare parts and maintenance products.

B. Furnish extra materials described below that match products installed and that are packaged with protective covering for storage and identified with labels describing contents.
   1. Floor Tile: Furnish 1 box for every 50 boxes or fraction thereof, of each type, color, and pattern of floor tile installed.
   2. Furnish not less than 2 undamaged boxes for each color selection.

PART 2 - PRODUCTS

2.1 TILE FLOORING

A. Manufacturers:
   1. Armstrong World Industries, Inc.
   2. Azrock Commercial Flooring
   3. Roppe Corp.
   4. Tarkett Model
   5. Substitutions: Section 01600 - Product Requirements.

B. Vinyl Composition Tile: ASTM F1066:
   1. Size: 12 x 12 inch
   2. Thickness: 0.125 inch
   3. Pattern: Color and pattern dispersed uniformly throughout its thickness, Class 2 – through pattern
   4. Color to be selected by Architect from the full range currently available from Manufacturer.

C. Rubber Tile: ASTM F1066, ASTM F1344, Class I, Type A, B:
   1. Size: 12 x 12 inch
   2. Overall Thickness: 0.125 inch
   3. Base Thickness: 0.050 inch
   4. Design: Molded, in disc, square, diamond pattern
   5. Style: Solid color or Mottled.

2.2 RESILIENT BASE

A. Manufacturers:
   1. Armstrong World Industries, Inc. Model ‘Color-Integrated Rubber Wall Base’
   2. Tarkett Commercial Flooring Model ‘Napco Rubber Wall Base’
   3. Roppe Corp. Model ‘Pinnacle Rubber Base’
   4. Substitutions: Section 01600 - Product Requirements
   5. Vinyl base is not acceptable.

B. Base: ASTM F1861 Type TP Group 1 Rubber; top set coved:
   1. Height: 4 inch

2. Thickness: 1/8 inch thick
3. Finish: Satin or Matte
4. Length: Roll
5. Style: Coved
6. Accessories: Premolded external corners and end stops
7. Color to be selected by Architect from the full range currently available from Manufacturer.

2.3 ACCESSORIES

A. Subfloor Filler: Cementitious; type recommended by adhesive material Manufacturer.

B. Primers and Adhesives: Waterproof; types recommended by flooring Manufacturer.

C. Moldings and Edge Strips: Standard aluminum chromium alloy strips one inch wide and beveled, and of proper depth for the tile, fastened with countersunk screws and expansion shields at 8 inches on center. Install where vinyl tile joins concrete finish floor.

D. Filler for Coved Base: types recommended by flooring Manufacturer.

E. Sealer and Wax: Types recommended by flooring Manufacturer.

PART 3 - EXECUTION

3.1 EXAMINATION

A. Section 01310 - Project Management and Coordination: Verification of existing conditions before starting Work.

B. Verify concrete floors are dry to maximum moisture content as recommended by Manufacturer, and exhibit negative alkalinity, carbonization, and dusting.

C. Verify floor and lower wall surfaces are free of substances capable of impairing adhesion of new adhesive and finish materials.

D. Verify that floor surfaces are smooth and flat with maximum variation of 1/8 inch in 10 feet and are ready to receive work.

E. Examine substrates, with Installer present, for compliance with requirements for installation tolerances, moisture content, and other conditions affecting performance.
1. Verify that finishes of substrates comply with tolerances and other requirements specified in other Sections and that substrates are free of cracks, ridges, depressions, scale, and foreign deposits that might interfere with adhesion of resilient products.
2. Proceed with installation only after unsatisfactory conditions have been corrected.

3.2 PREPARATION

A. Prepare substrates according to Manufacturer's written recommendations to ensure adhesion of resilient products.

B. Remove sub-floor ridges and bumps. Fill minor low spots, cracks, joints, holes, and other defects with sub-floor filler to achieve smooth, flat, hard surface.

C. Prohibit traffic until filler is cured.

D. Clean substrate. Remove substrate coatings and other substances that are incompatible with adhesives and that contain soap, wax, oil, or silicone, using mechanical methods recommended by Manufacturer. Do not use solvents.

E. Apply primer as required to prevent "bleed-thru" or interference with adhesion by substances cannot be removed.

3.3 INSTALLATION - TILE FLOORING

A. Mix tile from container to ensure shade variations are consistent when tile is placed. Match tiles for color and pattern by selecting tiles from cartons in the same sequence as manufactured and packaged, if so numbered. Discard broken, cracked, chipped, or deformed tiles.

B. Adhere tiles to flooring substrates using a full spread of adhesive applied to substrate to produce a completed installation without open cracks, voids, raising and puckering at joints, telegraphing of adhesive spreader marks, and other surface imperfections.

C. Lay flooring with joints and seams parallel to building lines to produce symmetrical tile pattern.

D. Owner to select final pattern; Lay tiles with grain running in one direction or with basket weave pattern. Lay out tiles from center marks established with principal walls, discounting minor offsets, so tiles at opposite edges of room are of equal width. Adjust as necessary to avoid using cut widths that equal less than one-half tile at perimeter.

E. Scribe flooring to walls, columns, cabinets, floor outlets, and other appurtenances to produce tight joints.

F. Extend tiles into toe spaces, door reveals, closets, and similar openings.

G. Where floor finishes are different on opposite sides of door, terminate flooring under centerline of door.

H. Install edge strips at unprotected or exposed edges, where flooring terminates, and where indicated. Secure metal strips before installation of flooring with stainless steel screws.

I. Install flooring in recessed floor access covers. Maintain floor pattern, install tiles on covers for telephone and electrical ducts and similar items in finished floor areas. Maintain overall continuity of color and pattern with pieces of tile installed on covers. Tightly adhere tile edges to substrates that abut covers and to cover perimeters.

J. At movable partitions, install flooring under partitions without interrupting floor pattern.

K. Install feature strips and floor markings where indicated. Fit joints tightly.

3.4 INSTALLATION - BASE

A. Apply wall base to walls, columns, pilasters, casework and cabinets in toe spaces, and other permanent fixtures in rooms and areas where base is required. Tightly adhere wall base to substrate throughout length of each piece, with base in continuous contact with horizontal and vertical substrates.

B. Install wall base in lengths as long as practicable without gaps at seams and with tops of adjacent pieces aligned. Fit joints tightly and make vertical. Maintain minimum dimension of 18 inches between joints.

C. Miter internal corners: Use straight pieces of maximum lengths possible. Form by cutting an inverted V-shaped notch in toe of wall base at the point where corner is formed. Shave back of base where necessary to produce a snug fit to substrate.

D. At external corners, use premolded units. At exposed ends, use premolded units. Install premolded corners at external corners before installing straight pieces

E. Install base on solid backing. Bond tightly to wall and floor surfaces.

F. Scribe and fit to door frames and other interruptions.

G. On masonry surfaces or other similar irregular substrates, fill voids along top edge of wall base with Manufacturer's recommended adhesive filler material.

H. Do not stretch wall base during installation.

3.5 CLEANING AND PROTECTION OF INSTALLED CONSTRUCTION

A. Section 01700 - Execution Requirements: Final cleaning.

B. Remove excess adhesive from floor, base, and wall surfaces without damage. Perform the following operations immediately after completing resilient product installation:
   1. Remove adhesive and other blemishes from exposed surfaces.
   2. Sweep and vacuum surfaces thoroughly.
   3. Damp-mop surfaces to remove marks and soil.
      a. Do not wash surfaces until after time period recommended by Manufacturer.

C. Prohibit traffic on resilient flooring for 48 hours after installation.

D. Protect resilient products from mars, marks, indentations, and other damage from construction operations and placement of equipment and fixtures during remainder of construction period. Use protection methods recommended in writing by Manufacturer.
   1. Apply protective floor polish to horizontal surfaces that are free from soil, visible adhesive and surface blemishes if recommended in writing by Manufacturer.
      a. Use commercially available product acceptable to Manufacturer.
      b. Coordinate selection of floor polish with Owner's maintenance service.
   2. Cover products installed on horizontal surfaces with undyed, untreated building paper until Substantial Completion.
   3. Do not move heavy and sharp objects directly over surfaces. Place hardboard or plywood panels over flooring and under objects while they are being moved. Slide or roll objects over panels without moving panels.

E. Clean, seal, and maintain resilient flooring products.

END OF SECTION

SECTION 09900

PAINTS AND COATINGS

PART 1 - GENERAL

1.1 SUMMARY

A. Section includes surface preparation and field application of paints, stains, varnishes, and other coatings.

B. Related Sections:
1. Section 05500 - Metal Fabrications: Shop primed items
2. Section 15075 - Mechanical Identification
3. Section 16075 - Electrical Identification.

1.2 REFERENCES

A. ASTM International:
1. ASTM D16 - Standard Terminology Relating to Paint, Varnish, Lacquer, and Related Products
2. ASTM D4442 - Standard Test Methods for Direct Moisture Content Measurement of Wood and Wood-Base Materials.

B. Painting and Decorating Contractors of America:
1. PDCA - Architectural Painting Specification Manual.

C. SSPC: The Society for Protective Coatings:
1. SSPC - Steel Structures Painting Manual.

1.3 DEFINITIONS

A. Conform to ASTM D16 for interpretation of terms used in this section.

1.4 SUBMITTALS

A. Section 01330 - Submittal Procedures: Submittal procedures.

B. Product Data: Submit data on finishing products.

C. Samples:
1. Submit two paper chip samples, 8 ½ x 11 inch in size illustrating range of colors and textures available for each surface finishing product scheduled.

D. Manufacturer's Installation Instructions: Submit special surface preparation procedures and substrate conditions requiring special attention.

1.5 CLOSEOUT SUBMITTALS

A. Section 01700 - Execution Requirements: Closeout procedures.

B. Operation and Maintenance Data: Submit data on cleaning, touch-up, and repair of painted and coated surfaces.

1.6 QUALIFICATIONS

A. Manufacturer: Company specializing in manufacturing products specified in this section with minimum three years documented experience.

B. Applicator: Company specializing in performing work of this section with minimum three years documented experience.

C. Comply with governing codes and regulations. Regulations: Compliance with VOC and environmental regulations.

1.7 MOCKUP

A. Section 01400 - Quality Requirements: Mock-up requirements.

B. Construct mockup panel, 4 x 4 feet, illustrating coating color, texture, and finish.

C. Construct door and frame assembly illustrating paint and stain and varnish coating color, texture, and finish.

D. Locate where directed by Architect/Engineer.

E. Incorporate accepted mockup as part of Work.

1.8 PRE-INSTALLATION MEETINGS

A. Section 01300 - Administrative Requirements: Pre-installation meeting.

B. Convene minimum two weeks prior to commencing work of this section.

1.9 DELIVERY, STORAGE, AND HANDLING

A. Section 01600 - Product Requirements: Product storage and handling requirements.

B. Deliver products to site in sealed and labeled containers; inspect to verify acceptability.

C. Container Label: Include Manufacturer's name, type of paint, brand name, lot number, brand code, coverage, surface preparation, drying time, cleanup requirements, color designation, and instructions for mixing and reducing.

D. Paint Materials: Store at minimum ambient temperature of 45 degrees F and maximum of 90 degrees F, in ventilated area, and as required by Manufacturer's instructions.

1.10 ENVIRONMENTAL REQUIREMENTS

A. Section 01600 - Product Requirements.

B. Do not apply materials when surface and ambient temperatures are outside temperature ranges required by paint product Manufacturer.

C. Do not apply exterior coatings during rain or snow when relative humidity is outside humidity ranges, or moisture content of surfaces exceed those required by paint product Manufacturer.

D. Minimum Application Temperatures for Latex Paints: 45 degrees F for interiors; 50 degrees F for exterior; unless required otherwise by Manufacturer's instructions.

E. Minimum Application Temperature for Varnish and Finishes: 65 degrees F for interior or exterior, unless required otherwise by Manufacturer's instructions.

F. Provide lighting level of 80 ft candle measured mid-height at substrate surface.

1.11 SEQUENCING

A. Section 01100 - Summary: Work sequence.

B. Sequence application to the following:
1. Do not apply finish coats until paintable sealant is applied.
2. Back prime wood trim before installation of trim.

1.12 WARRANTY

A. Section 01700 - Execution Requirements: Product warranties and product bonds.

B. Furnish five year Manufacturer warranty for paints and coatings.

1.13 EXTRA MATERIALS

A. Section 01700 - Execution Requirements: Spare parts and maintenance products.

B. Supply 1 gallons of each color, type, and surface texture; store where directed.

C. Label each container with color, type, texture, room locations, and in addition to Manufacturer's label.

PART 2 - PRODUCTS

2.1 PAINTS AND COATINGS

A. Manufacturers: Subject to compliance with requirements, provide products by one of the following or an approved equivalent Manufacturer:

1. Benjamin Moore Model Professional coatings ‘Super Spec’
2. PPG Architectural Finishes Model ‘High Performance Coatings’
3. Pratt and Lambert Model ‘Pro-Hide Gold’
4. Sherwin Williams Model ’High Performance Architectural’
5. Substitutions: Section 01600 - Product Requirements.

2.2 PAINT, GENERAL

A. Material Compatibility:
1. Provide materials for use within each paint system that are compatible with one another and substrates indicated, under conditions of service and application as demonstrated by Manufacturer, based on testing and field experience.
2. For each coat in a paint system, provide products recommended in writing by Manufacturers of topcoat for use in paint system and on substrate indicated.

B. Colors: As selected by Architect from Manufacturer's full range.

C. Material:
1. Waterborne Latex (Acrylic) Emulsion Paint.
a. Zero VOC paint: Flat and eggshell sheens, VOC content less than 5 grams/liter.
b. Low VOC paint: Semi-gloss and gloss sheens, VOC content less than 100 grams/liter.

2.3 COMPONENTS

A. Coatings: Ready mixed, except field catalyzed coatings. Prepare coatings:
1. To soft paste consistency, capable of being readily and uniformly dispersed to homogeneous coating
2. For good flow and brushing properties
3. Capable of drying or curing free of streaks or sags.

B. Accessory Materials: Linseed oil, shellac, turpentine, paint thinners and other materials not specifically indicated but required to achieve finishes specified; commercial quality.

C. Patching Materials: Latex filler.

D. Fastener Head Cover Materials: Latex filler.

E. Wood-Knot Sealer: Sealer recommended in writing by topcoat Manufacturer for use in paint systems indicated.

PART 3 - EXECUTION

3.1 EXAMINATION

A. Section 01300 - Administrative Requirements: Coordination and project conditions.

B. Verify surfaces and substrate conditions are ready to receive Work as instructed by product Manufacturer.

C. Examine surfaces scheduled to be finished prior to commencement of work. Report conditions capable of affecting proper application.

D. Test shop applied primer for compatibility with subsequent cover materials.

E. Measure moisture content of surfaces using electronic moisture meter. Do not apply finishes unless moisture content of surfaces are below the Manufacturers recommendation or at least the following maximums:
1. Plaster and Gypsum Wallboard: 12 percent
2. Masonry, Concrete, and Concrete Unit Masonry: 12 percent
3. Interior Wood: 15 percent, measured in accordance with ASTM D4442
4. Exterior Wood: 15 percent, measured in accordance with ASTM D4442
5. Concrete Floors: 8 percent.

3.2 PREPARATION

A. Comply with Manufacturer's written instructions and recommendations, applicable to substrates indicated.

B. Surface Appurtenances: Remove electrical plates, hardware, light fixture trim, escutcheons, and fittings prior to preparing surfaces or finishing.
1. After completing painting operations, use workers skilled in the trades involved to reinstall items that were removed. Remove surface-applied protection if any.
2. Do not paint over labels of independent testing agencies or equipment name, identification, performance rating, or nomenclature plates.

C. Surfaces: Correct defects and clean surfaces capable of affecting work of this section. Remove or repair existing coatings exhibiting surface defects.

D. Marks: Seal with shellac those which may bleed through surface finishes.

E. Impervious Surfaces: Remove mildew by scrubbing with solution of tri-sodium phosphate and bleach. Rinse with clean water and allow surface to dry.

F. Aluminum Surfaces Scheduled for Paint Finish: Remove surface contamination by steam or high pressure water. Remove oxidation with acid etch and solvent washing. Apply etching primer immediately following cleaning.

G. Asphalt, Creosote, or Bituminous Surfaces Scheduled for Paint Finish: Remove foreign particles to permit adhesion of finishing materials. Apply compatible sealer or primer.

H. Insulated Coverings: Remove dirt, grease, and oil from canvas and cotton.

I. Concrete Floors: Remove contamination, acid etch, and rinse floors with clear water. Verify required acid-alkali balance is achieved. Allow to dry.

J. Copper Surfaces Scheduled for Paint Finish: Remove contamination by steam, high pressure water, or solvent washing. Apply vinyl etch primer immediately following cleaning.

K. Copper Surfaces Scheduled for Natural Oxidized Finish: Remove contamination by applying oxidizing solution of copper acetate and ammonium chloride in acetic acid. Rub on repeatedly for required effect. Once attained, rinse surfaces with clear water and allow to dry.

L. Gypsum Board Surfaces: Fill minor defects with filler compound. Spot prime defects after repair.

M. Galvanized Surfaces: Remove surface contamination and oils and wash with solvent. Apply coat of etching primer.

N. Concrete and Unit Masonry Surfaces Scheduled to Receive Paint Finish: Remove dirt, loose mortar, scale, salt or alkali powder, and other foreign matter. Remove oil and grease with solution of tri-sodium phosphate; rinse well and allow to dry. Remove stains caused by weathering of corroding metals with solution of sodium metasilicate after thoroughly wetting with water. Allow to dry.

O. Plaster Surfaces: Fill hairline cracks, small holes, and imperfections with latex patching plaster. Make smooth and flush with adjacent surfaces. Wash and neutralize high alkali surfaces.

P. Uncoated Steel and Iron Surfaces: Remove grease, mill scale, weld splatter, dirt, and rust. Where heavy coatings of scale are evident, clean using methods recommended in writing by paint Manufacturer; clean by washing with solvent. Apply treatment of phosphoric acid solution, ensuring weld joints, bolts, and nuts are similarly cleaned. Spot prime paint after repairs.

Q. Shop Primed Steel Surfaces: Sand and scrape to remove loose primer and rust. Feather edges to make touch-up patches inconspicuous. Clean surfaces with solvent. Prime bare steel surfaces. Prime metal items including shop primed items.

R. Interior Wood Items Scheduled to Receive Paint Finish: Wipe off dust and grit prior to priming. Seal knots, pitch streaks, and sappy sections with sealer. Fill nail holes and cracks after primer has dried; sand between coats.

S. Interior Wood Items Scheduled to Receive Transparent Finish: Wipe off dust and grit prior to sealing, seal knots, pitch streaks, and sappy sections with sealer. Fill nail holes and cracks after sealer has dried; sand lightly between coats.

T. Exterior Wood Scheduled to Receive Paint Finish: Remove dust, grit, and foreign matter. Seal knots, pitch streaks, and sappy sections. Fill nail holes with tinted exterior paintable caulking compound after prime coat has been applied.

U. Metal Doors Scheduled for Painting: Prime metal door top and bottom edge surfaces.

3.3 APPLICATION

A. Apply paints according to Manufacturer's written instructions.
   1. Use applicators and techniques suited for paint and substrate indicated.
   2. Paint surfaces behind movable equipment and furniture same as similar exposed surfaces. Before final installation, paint surfaces behind permanently fixed equipment or furniture with prime coat only.
   3. Paint front and backsides of access panels, removable or hinged covers, and similar hinged items to match exposed surfaces.

B. Do not apply finishes to surfaces that are not dry. Allow applied coats to dry before next coat is applied.

C. Apply each coat to uniform appearance. Apply each coat of paint slightly darker than preceding coat unless specified otherwise.

D. Sand wood and metal surfaces lightly between coats to achieve required finish.

E. Vacuum clean surfaces of loose particles. Use tack cloth to remove dust and particles just prior to applying next coat.

F. Where clear finishes are required, tint fillers to match wood. Work fillers into grain before set. Wipe excess from surface.

G. Prime concealed surfaces of woodwork with primer paint.

H. Apply paints to produce surface films without cloudiness, spotting, holidays, laps, brush marks, roller tracking, runs, sags, ropiness, or other surface imperfections. Cut in sharp lines and color breaks.

I. Prime concealed surfaces of interior wood surfaces scheduled to receive stain or varnish finish with gloss varnish reduced 25 percent with thinner.

J. Blockfiller shall be applied to the interior concrete block with not less than one (1) heavy coat and exterior concrete block with not less than two (2) heavy coats in a manner with brush and roller that forces the blockfiller into the fissures and pores of the block faces. Apply additional coats if required to produce a smooth, uniform surface and to close all open pores, crevices and pin holes.

K. Paint exposed conduit and electrical equipment occurring in finished areas. Color and texture to match adjacent surfaces. Do not paint light fixtures.

L. All surfaces shall receive either a prime coat or enamel undercoat before finish coats are applied. The type of finish coat shall determine the type of prime coat. Previously painted surfaces shall be sound and tightly adhering to its foundation.

M. No surface will be considered acceptable to receive finish paint until it has received a prime coat or enamel undercoat, and any surface that is finish painted without a prime coating shall be repainted as directed by the Architect/Engineer.

N. Do not paint naturally finished aluminum surfaces.

O. Finishing Mechanical And Electrical Equipment:
1. Refer to Section 15075 and Section 16075 for schedule of color coding and identification banding of equipment, duct work, piping, and conduit.
2. Paint both sides and edges of plywood backboards for electrical and telephone equipment before installing equipment.
3. Reinstall electrical cover plates, hardware, light fixture trim, escutcheons, and fittings removed prior to finishing.

3.4 FIELD QUALITY CONTROL

A. Section 01400 - Quality Requirements: Testing and Inspection Services.

B. Testing of Paint Materials: Owner reserves the right to invoke the following procedure at any time and as often as Owner deems necessary during the period when paints are being applied:
1. Owner will engage the services of a qualified testing agency to sample paint materials being used. Samples of material delivered to Project site will be taken, identified, sealed, and certified in presence of Contractor.
2. Testing agency will perform tests for compliance with product requirements.
3. Owner may direct Contractor to stop applying paints if test results show materials being used do not comply with product requirements. Contractor shall remove noncomplying-paint materials from Project site, pay for testing, and repaint surfaces painted with rejected materials. Contractor will be required to remove rejected materials from previously painted surfaces if, on repainting with complying materials, the two paints are incompatible.

C. Inspect and test questionable coated areas.

3.5 CLEANING

A. Section 01700 - Execution Requirements: Final cleaning.

B. Collect waste material which may constitute fire hazard, place in closed metal containers, and remove daily from site.

C. After completing paint application, clean spattered surfaces. Remove spattered paints by washing, scraping, or other methods. Do not scratch or damage adjacent finished surfaces.

D. Protect work of other trades against damage from paint application. Correct damage to work of other trades by cleaning, repairing, replacing, and refinishing, as approved by Architect, and leave in an undamaged condition.

E. At completion of construction activities of other trades, touch up and restore damaged or defaced painted surfaces.

3.6 SCHEDULE - EXTERIOR SURFACES

A. Wood - Painted (Opaque):
1. One coat of alkyd primer sealer
2. Two coats of alkyd enamel, semi-gloss

B. Pavement Markings:
1. Two coats of paint, white

C. Concrete, Concrete Block, Cement Plaster:
1. One coat of block primer
2. Two coats of latex, flat

D. Cement Plaster Soffits
1. One coat of primer sealer latex
2. Two coats of latex, flat

E. Copper:
1. One coat etching primer
2. One coat of alkyd enamel

F. Steel - Unprimed:
1. One coat of Low VOC modified alkyd primer
2. Two coats of Low VOC modified alkyd enamel, semi-gloss

G. Steel - Shop Primed:
1. Touch-up with primer
2. Two coats of Low VOC modified alkyd enamel, semi-gloss

H. Steel - Galvanized:
1. One coat galvanize primer
2. Two coats of Low VOC modified alkyd enamel, semi-gloss

I. Aluminum - Mill Finish:
1. One coat etching primer
2. Two coats of alkyd enamel, semi-gloss

J. Truck Wash Bay
1. One coat Waterborne Epoxy Block Filler
2. One coat Epoxy Metal Primer
3. Two coat Low Cure Epoxy Mastic Coating

3.7 SCHEDULE - INTERIOR SURFACES

A. Wood - Painted:
1. One coat of alkyd prime sealer

2. Two coats of acrylic latex enamel, semi-gloss

B. Wood - Transparent:
1. Filler coat (for open grained wood only)
2. Two coats of stain
3. One coat sealer
4. Two coats of varnish, satin

C. Concrete, Concrete Block:
1. One coat of block filler
2. Two coats of alkyd, semi-gloss

D. Steel - Unprimed:
1. One coat of Low VOC modified alkyd primer
2. Two coats of Low VOC modified alkyd enamel, semi-gloss

E. Steel - Primed:
1. Touch-up with primer
2. Two coats of Low VOC modified alkyd enamel, semi-gloss

F. Steel - Galvanized:
1. One coat galvanize primer or acrylic primer
2. Two coats of Low VOC modified alkyd enamel, semi-gloss

G. Aluminum - Mill Finish:
1. One coat etching primer
2. Two coats of Low VOC modified alkyd enamel, semi-gloss

H. Gypsum Board Wall and Ceilings:
1. One coat of acrylic primer sealer
2. Two coats of Zero VOC latex acrylic, eggshell

END OF SECTION

SECTION 09910

PAINTING FUELING SYSTEM

PART 1 - GENERAL

1.1 SECTION INCLUDES

A. Surface Preparation

B. Surface Finish Schedule

1.2 RELATED WORK

A. Section Various: Shop primed items, as called for under individual sections.

1.3 REFERENCES

A. ANSI/ASTM D16 - Definitions of Terms Relating to Paint, Varnish, Lacquer, and Related Products.

1.4 DEFINITION

A. Conform to ANSI/ASTM D16 for interpretation of terms used in this Section.

1.5 QUALITY ASSURANCE

A. Product Manufacturer: Company specializing in manufacturing quality paints and finishing products with ten years experience.

B. Applicator: Company specializing in commercial painting and industrial painting with five years documented experience.

1.6 REGULATORY REQUIREMENTS

A. Conform to applicable code for flame/fuel/smoke rating requirements for finishes.

1.7 SUBMITTALS

A. Submit product data under provisions of Section 01330 - Submittals.

B. Provide product data on all finishing products.

C. Submit samples under provisions of Section 01330 - Submittals.

D. Submit Manufacturers' application instructions under provisions of Section 01330 - Submittals.

1.8 DELIVERY, STORAGE, AND HANDLING

A. Deliver products to site under provisions of Section 01600 - Material and Equipment.

B. Store and protect products under provisions of Section 01600 - Material and Equipment.

C. Deliver products to site in sealed and labeled containers; inspect to verify acceptance.

D. Container labeling to include Manufacturer's name, type of paint, brand name, brand code, coverage, surface preparation, drying time, cleanup, color designation, and instructions for mixing and reducing.

E. Store paint materials at minimum ambient temperature at 45°F (7°C) and a maximum of 90°F (32°C), in well ventilated areas, unless required otherwise by Manufacturers' instructions.

F. Take precautionary measures to prevent fire hazards and spontaneous combustion.

1.9 ENVIRONMENTAL REQUIREMENTS

A. Provide continuous ventilation and heating facilities to maintain surface and ambient temperatures above 45°F for 24 hours before, during and 48 hours after application of finishes, unless required otherwise by Manufacturer's instructions.

B. Do not apply exterior coatings during rain or snow, or when relative humidity is above 50%, unless required otherwise by Manufacturer's instructions.

C. Minimum Application Temperatures for Latex Paints: 45°F (7°C) for interiors; 50°F (10°C) for exteriors, unless required otherwise by Manufacturer's instructions.

1.10 EXTRA STOCK

A. Provide one-gallon container of each color at each site to Owner.

PART 2 - PRODUCTS

2.1 ACCEPTABLE MANUFACTURER'S – PAINT

A. Tnemec

B. Pittsburgh

C. Sherwin Williams

2.2 ACCEPTABLE MANUFACTURER'S - PRIMER SEALERS

A. Tnemec

B. Pittsburgh

C. Sherwin Williams

2.3 ACCEPTABLE MANUFACTURER'S - FIELD CATALYZED COATINGS

A. Tnemec

B. Pittsburgh

C. Sherwin Williams

2.4 MATERIALS

A. Coatings: Ready mixed, except field-catalyzed coatings. Process pigments to a soft paste consistency, capable of being readily and uniformly dispersed to a homogeneous coating.

B. Coatings: Good flow and brushing properties; capable of drying or curing free of streaks or sags.

C. Accessory Materials: Linseed oil, shellac, turpentine, paint thinners and other materials not specifically indicated but required to achieve the finish specified, of commercial quality.

PART 3 - EXECUTION

3.1 INSPECTION

A. Verify that surfaces and substrate conditions are ready to receive work as instructed by the product Manufacturer.

B. Examine surfaces scheduled to be finished prior to commencement of work. Report any condition that may potentially affect proper application.

3.2 PREPARATION

A. Remove electrical plates, hardware, light fixture trim, and fittings prior to preparing surfaces or finishing.

B. Correct minor defects and clean surfaces that affect work of this Section.

C. Shellac and seal marks which may bleed through surface finishes.

D. Impervious Surfaces: Remove mildew by scrubbing with solution of tri-sodium phosphate and bleach. Rinse with clean water and allow surface to dry.

E. Aluminum Surfaces Scheduled for Paint Finish: Remove oxidation with acid etch and solvent washing. Apply etching primer immediately following cleaning.

F. Asphalt, Creosote, or Bituminous Surfaces Scheduled for Paint Finish: Remove foreign particles to permit adhesion of finishing materials. Apply compatible sealer or primer.

G. Insulated Coverings: Remove dirt, grease, and oil from canvas and cotton.

H. Concrete Floors: Remove contamination, then acid etch and rinse floors with clear water. Verify required acid-alkali balance is achieved. Allow to dry.

I. Copper Surfaces Scheduled for a Paint Finish: Remove contamination by steam, high-pressure water, or solvent washing. Apply vinyl etch primer immediately following cleaning.

J. Copper Surfaces Scheduled for a Natural Oxidized Finish: Remove contamination by applying oxidizing solution of copper acetate and ammonium chloride in acetic acid. Rub on repeatedly for required effect. Once attained, rinse surfaces with clear water and allow to dry.

K. Galvanized Surfaces: Remove surface contamination and oils and wash with solvent. Apply coat of etching primer.

L. Concrete and Unit Masonry Surfaces Scheduled to Receive Paint Finish: Remove dirt, loose mortar, scale, salt or alkali powder, and other foreign matter. Remove oil and grease with a solution of tri-sodium phosphate; rinse well and allow to dry. Remove stains caused by weathering of corroding metals with a solution of sodium metasilicate after thoroughly wetting with water. Allow to dry.

M. Uncoated Steel and Iron Surfaces: Remove grease, scale, dirt, and rust. Where heavy coatings of scale are evident, remove by wire brushing or sandblasting; clean by washing with solvent. Apply a treatment of phosphoric acid solution, ensuring weld joints, bolts, and nuts are similarly cleaned. Spot prime paint after repairs.

N. Shop Primed Steel Surfaces: Sand and scrape to remove loose primer and rust. Feather edges to make touch-up patches inconspicuous. Clean surfaces with solvent. Prime bare steel surfaces.

3.3 PROTECTION

A. Protect elements surrounding the work of this Section from damage or disfiguration.

B. Repair damage to other surfaces caused by work of this Section.

C. Furnish drop cloths, shields, and protective methods to prevent spray or droppings from disfiguring other surfaces.

D. Remove empty paint containers from site.

3.4 APPLICATION

A. Apply products in accordance with Manufacturer's instructions.

B. Do not apply finishes to surfaces that are not dry.

C. Apply each coat to uniform finish.

D. Apply each coat of paint slightly darker than preceding coat unless otherwise approved.

E. Sand lightly between coats to achieve required finish.

F. Allow applied coat to dry before next coat is applied.

3.5 FINISHING MECHANICAL AND ELECTRICAL EQUIPMENT

A. Paint shop-primed equipment.

B. Prime and paint insulated and exposed pipes, conduit, boxes, insulated and exposed ducts, hangers, brackets, collars and supports, where items are refinished.

C. Replace identification markings on mechanical or electrical equipment when painted accidentally. Contractor shall paint junction box covers independently from conduit.

D. Paint exposed conduit and electrical equipment.

E. Replace electrical plates, hardware, light fixture trim, and fittings removed prior to finishing.

3.6 CLEANING

A. As work proceeds, promptly remove paint where spilled, splashed, or spattered.

B. During progress of work, maintain premises free of unnecessary accumulation of tools, equipment, surplus materials, and debris.

C. Collect cotton waste, cloths, and material which may constitute a fire hazard, place in closed metal containers and remove daily from site.

3.7 SCHEDULE - SHOP PRIMED ITEMS FOR SITE FINISHING

A. Valves

B. Tanks (Above ground)

3.8 SCHEDULE - EXTERIOR SURFACES

A. Steel – Unprimed:
   1. One coat universal primer
   2. Two coats alkyd enamel, semi-gloss

B. Steel - Shop Primed:
   1. Touch up with universal primer
   2. Two coats alkyd enamel, semi-gloss

C. Steel – Galvanized:
   1. One coat etching primer
   2. One coat universal primer

3. Two coats alkyd enamel, semi-gloss

D. Fiberglass Pipe:
1. Two coats as recommended by pipe supplier

E. Concrete:
1. One coat primer as recommended by paint supplier
2. Two coats alkyd enamel, semi-gloss

3.9 COLORS

A. Submit Manufacturers' color selection and schedule of items to be painted to Owner at the pre-construction meeting. Owner will select colors and notify Contractor.

3.10 Schedule – items

A. Tanks (Above Ground)

B. Valves

C. Pipe

D. Stairs and platforms

E. Exposed conduit, wireways, etc.

F. Guard post

G. Manhole covers (sump) and frames

H. Canopy

END OF SECTION

SECTION 10100

VISUAL DISPLAY BOARDS

PART 1 - GENERAL

1.1 SUMMARY

A. Section includes marker boards and tack boards.

B. Related Sections:
1. Section 06114 - Wood Blocking and Curbing: Wood grounds
2. Section 09111 - Non-Load-Bearing Metal Framing System

1.2 REFERENCES

A. American National Standards Institute:
1. ANSI A135.4 - Basic Hardboard
2. ANSI A208.1 - Mat-Formed Wood Particleboard

B. ASTM International:
1. ASTM A424 - Standard Specification for Steel, Sheet, for Porcelain Enameling
2. ASTM A653/A653M - Standard Specification for Steel Sheet, Zinc-Coated (Galvanized) or Zinc-Iron Alloy-Coated (Galvannealed) by the Hot-Dip Process
3. ASTM B209 - Standard Specification for Aluminum and Aluminum-Alloy Sheet and Plate
4. ASTM B221 - Standard Specification for Aluminum and Aluminum-Alloy Extruded Bars, Rods, Wire, Profiles, and Tubes
5. ASTM C36 - Standard Specification for Gypsum Wallboard
6. ASTM C208 - Standard Specification for Cellulosic Fiber Insulating Board
7. ASTM E84 - Standard Test Method for Surface Burning Characteristics of Building Materials

C. Federal Specification Unit:
1. FS CCC-W-408 - Wall Covering, Vinyl-Coated
2. FS L-P-1040 - Plastic Sheets and Strips (Polyvinyl Fluoride)

1.3 SUBMITTALS

A. Section 01330 - Submittal Procedures: Submittal procedures.

B. Shop Drawings: Indicate wall elevations, dimensions, joint locations, and special anchor details.

C. Product Data: Submit data on marker boards, tack boards, trim and accessories.

D. Samples: Submit illustrating materials and finish, color and texture of marker board and tack boards.

1.4 CLOSEOUT SUBMITTALS

A. Section 01700 - Execution Requirements: Closeout procedures.

B. Operation and Maintenance Data: Submit Operation and Maintenance Data.

1.5 QUALITY ASSURANCE

A. Conform to applicable code for flame/smoke rating of tack boards in accordance with ASTM E84.

1.6 QUALIFICATIONS

A. Manufacturer: Company specializing in manufacturing products specified in this section with minimum three years documented experience.

1.7 FIELD MEASUREMENTS

A. Verify field measurements prior to fabrication.

1.8 WARRANTY

A. Section 01700 - Execution Requirements: Product warranties and product bonds.

B. Special Warranty for Porcelain-Enamel Face Sheets: Manufacturer's standard form in which Manufacturer agrees to repair or replace porcelain-enamel face sheets that fail in materials or workmanship within specified warranty period.
   1. Failures include, but are not limited to, the following:
      a. Surfaces lose original writing and erasing qualities
      b. Surfaces become slick or shiny
      c. Surfaces exhibit crazing, cracking, or flaking.

C. Warranty Period: 50 years from date of Substantial Completion.

PART 2 - PRODUCTS

2.1 VISUAL DISPLAY BOARDS

A. Manufacturers:
   1. Best-Rite Chalkboard Co. Inc.
   2. Claridge Products and Equipment
   3. Substitutions: Section 01600 - Product Requirements.

2.2 COMPONENTS

A. Sheet Steel: ASTM A653/A653M,coating class G90 designation. ASTM A424, Type I, commercial quality.

B. Aluminum Sheet: ASTM B209, 6063 alloy, T52 temper.

C. Natural Cork Sheet: Seamless, single layer, compressed fine-grain cork sheet, bulletin board quality; face sanded for natural finish.

D. Particle Board: ANSI A208.1, grade 1-M-1 set with waterproof resin binder, sanded faces.

E. Foil Backing: Aluminum sheet.

F. Frame and Chalk rail: Aluminum extrusions, ASTM B221, 6063 alloy, T52 temper.

2.3 ACCESSORIES

A. Adhesives: Type used by Manufacturer.

B. Temporary Protective Cover: Sheet polyethylene.

C. Cleaning Instruction Plate: Provide instructions for chalkboard cleaning on metal plate fastened to perimeter frame near chalk rail.

D. Chalk tray: Manufacturer's standard, continuous.
1. Solid Type: Extruded aluminum with ribbed section and smoothly curved exposed ends.

E. Map Rail: Provide the following accessories:
1. Display Rail: Continuous and integral with map rail; fabricated from cork approximately 1 to 2 inches wide.
2. End Stops: Located at each end of map rail.
3. Map Hooks: Two map hooks for every 48 inches of map rail or fraction thereof.

2.4 FABRICATION

A. Outer Face Sheet: Steel, 22 gage thick.

B. Core: Particle board, ½ inch thick.

C. Outer Facing: Natural-Cork Tack Assembly: 1/4-inch- thick, natural cork sheet factory laminated to 3/8 inch- thick hardboard backing.

D. Backing Surface: Aluminum sheet, 0.015 inch thick.

E. Aluminum Frame: Of profile from Manufacturers standard full range; concealed fasteners, map rail with cork insert over marker board and tackboard surfaces.

F. Aluminum Chalk rail: Of profile from Manufacturer’s standard full range, one piece full length of chalkboard, molded closed ends; concealed fasteners.

2.5 FACTORY FINISHING

A. Porcelain Enamel: Glass fibered enamel, baked to vitreous surfaces; Porcelain Enamel Institute Type A; color to be selected by Architect.

B. Tackboard Surface: Natural light brown cork.

C. Aluminum Frame, Chalk rail, and Accessories: Mill finish natural aluminum. Fabricate units straight and of single lengths, keeping joints to a minimum. Miter corners to neat, hairline closure.

PART 3 - EXECUTION

3.1 EXAMINATION

A. Section 01300 - Administrative Requirements: Coordination and project conditions.

B. Verify internal wall blocking is ready to receive Work and positioning dimensions are as indicated on shop drawings and instructed by Manufacturer.

C. Verify flat wall surface for frameless adhesive applied type.

3.2 INSTALLATION

A. General: Install visual display surfaces in locations and at mounting heights indicated on Drawings, or if not indicated, at heights meeting ADA and TAS compliance. Keep perimeter lines straight, level, and plumb. Provide grounds, clips, backing materials, adhesives, brackets, anchors, trim, and accessories necessary for complete installation.

B. Field-Assembled Visual Display Units: Coordinate field-assembled units with grounds, trim, and accessories indicated. Join parts with a neat, precision fit.

C. Secure units level and plumb.

D. Marker boards and Tack boards: Butt panels tight with concealed spline to hairline joint.

3.3 CLEANING

A. Section 01700 - Execution Requirements: Final cleaning.

B. Clean visual display surfaces according to Manufacturer's written instructions. Attach one cleaning label to visual display surface in each room.

C. Cover chalkboard surfaces with protective cover, taped to frame.

D. Remove temporary protective cover at date of Substantial Completion.

3.4 SCHEDULES

A. Install boards in locations directed by Architect and Owner:
   1. VDB-1: Maintenance Crew:
      a. 8’ Wide Marker Board Unit.
   2. VDB-2: Conference Room:
      a. 12’ Wide Marker Board Unit.
   3. VDB-3: Conference Room:
      a. 12’ Wide Tackboard Unit.
   4. VDB-4: Meeting Room:
      a. 24’ Wide Marker Board/Tackboard Unit.
         1) 8’ Wide Marker Board centered with 8’ Tackboard on each side.

END OF SECTION

SECTION 10170

PLASTIC TOILET COMPARTMENTS

PART 1 - GENERAL

1.1 SUMMARY

A. Section includes solid plastic toilet compartments and urinal screen.

B. Related Sections:
1. Section 06114 – Carpentry Work: Concealed wood framing and blocking for compartment support
2. Section 10800 - Toilet, Bath, and Laundry Accessories

1.2 REFERENCES

A. ASTM International:
1. ASTM A666 - Standard Specification for Austenitic Stainless Steel Sheet, Strip, Plate, and Flat Bar.

1.3 SUBMITTALS

A. Section 01330 - Submittal Procedures: Submittal procedures.

B. Shop Drawings: Indicate partition plan, elevation views, dimensions, and details of wall, floor, and ceiling supports, door swings.

C. Product Data: Submit data on panel construction, hardware, and accessories.

D. Manufacturer's Certificate: Certify Products meet or exceed specified requirements.

E. Samples: Submit two 3 x 3 inch in size illustrating panel finish, color, and sheen.

F. Manufacturer's Installation Instructions: Submit special procedures and perimeter conditions requiring special attention.

1.4 CLOSEOUT SUBMITTALS

A. Section 01700 - Execution Requirements: Closeout procedures.

B. Operation and Maintenance Data: Submit recommended cleaning methods, cleaning materials, stain removal methods, and polishes and waxes.

1.5 COORDINATION

A. Section 01300 - Administrative Requirements: Coordination and project conditions.

B. Coordinate Work with placement of support framing and anchors in wall and ceiling.

PART 2 - PRODUCTS

2.1 SOLID PLASTIC TOILET COMPARTMENTS

A. Manufacturers:
1. Accurate Model Accurate Partitions
2. Global Steel Products Corporation model Global Polymer
3. Ampco Model Ampco Solid Plastic Polyethylene
4. Substitutions: Refer to Section 01600 - Material and Equipment.

B. Product Description: Floor mounted overhead braced toilet compartments, wall mounted urinal.

2.2 COMPONENTS

A. Toilet Compartments: High-Density polyethylene (HDPE) polymer - Solid molded plastic panels, doors, and pilasters, floor-mounted overhead head rail-braced and wall-hung.
1. Color: Single color as selected from Manufacturers' full color line.

B. Door and Panel Dimensions:
1. Thickness: 1 inch
2. Door Width: 24 inch
3. Accessible Door Width: 36 inch
4. Height: 58 inch
5. Thickness of Pilasters: 1-1/4 inch.

C. Urinal Screens: 24 x 42 inch - Wall mounted with panel brackets.

2.3 ACCESSORIES

A. Pilaster Shoe: Formed ASTM A666 Type 304 stainless steel with No. 4 finish, 4 inch high, concealing floor fastenings. Provide adjustment for floor variations with screw jack through steel saddles integral with pilaster.

B. Head Rails: Hollow anodized aluminum tube, 1 x 1-5/8 inch size, with cast socket wall brackets.

C. Brackets: anodized aluminum, to color as selected.

D. Attachments, Screws, and Bolts: Stainless steel.
1. For attaching panels and pilasters to brackets: Through-bolts and nuts.

E. Hardware: chrome plated non-ferrous cast metal: Furnish hardware to comply with ANSI A117.1 and Title III of the Americans with Disabilities Act (ADA) as follows:
   1. Hinges: Supply two heavy duty extruded satin anodized Type 6463-T5 aluminum hinges (three hinges for door widths exceeding 26"). Hinges shall wrap around stile and door components, be reinforced with steel supports, and be fully adjustable for door positioning. All hardware mounted with theft resistant thru-bolts.
   2. Nylon bearings.
   3. Latch and Keeper: Heavy duty extruded satin anodize Type 6463-T5 aluminum slide latch and keeper with emergency release.
   4. Coat Hook: Cast chrome plated non-ferrous metal coat hook (O/S) and/or combination hook bumper (I/S).
   5. Door Pull: Heavy duty cast satin anodized aluminum.
   6. Coat hook with rubber bumper; one for each compartment, mounted on panel.
   7. Furnish door pull for outswinging doors.
   8. Furnish metal heat sink at bottom of doors and partitions.

PART 3 - EXECUTION

3.1 EXAMINATION

A. Section 01300 - Administrative Requirements: Coordination and project conditions.

B. Verify field measurements are as indicated on shop drawings.

C. Verify correct spacing of and between plumbing fixtures.

D. Verify correct location of built-in framing, anchorage, and bracing.

3.2 INSTALLATION

A. Maintain 3/8 to 1/2 inch space between wall and panels and between wall and end pilasters.

B. Attach panel brackets securely to walls using anchor devices.

C. Attach panels and pilasters to brackets. Locate head rail joints at pilaster center lines.

D. Field touch-up of scratches or damaged finish will not be permitted. Replace damaged or scratched materials with new materials.

3.3 ERECTION TOLERANCES

A. Section 01400 - Quality Requirements: Tolerances.

B. Maximum Variation From Indicated Position: 1/4 inch.

C. Maximum Variation From Plumb: 1/8 inch.

3.4 ADJUSTING AND CLEANING

A. Section 01700 - Execution Requirements: Testing, adjusting, and balancing.

B. Adjust and align hardware to uniform clearance at vertical edge of doors, not exceeding 3/16 inch.

C. Adjust adjacent components for consistency of line or plane.

D. Hardware Adjustment: Adjust and lubricate hardware for proper operation. Set hinges on in-swing doors to hold open approximately 30 degrees from closed position when unlatched. Set hinges on out-swing doors (and entrance swing doors) to return to fully closed position.

E. Clean and Protect: Clean exposed surfaces of compartment systems using materials and methods recommended by Manufacturer, and provide protection as necessary to prevent damage during remainder of construction period.

END OF SECTION

SECTION 10200

LOUVERS & VENTS

PART 1 - GENERAL

1.1 SUMMARY

A. Section Includes: Metal wall louvers and screens exposed to view in finish work, including:
   1. Exterior metal louvers
   2. Louvers at locations where HVAC ductwork terminates at exterior walls
   3. Other exposed exterior and interior louvers indicated on Drawings

B. Extent: Extent of exterior louvers is shown on architectural drawings. Coordinate requirements, quantities and sizes with mechanical drawings. Louvers not shown on architectural drawing, but indicated on mechanical drawings shall be provided as part of work of this section.

C. Related Sections: Section(s) related to this section include:
   1. Sealant and Caulking: Division 7 Joint Treatment Section
   2. Dampers and Ductwork: Division 15 Dampers and Ductwork Sections
   3. Grilles and Registers: Division 15 Grilles and Registers Sections

1.2 REFERENCES

A. General: Standards listed by reference, including revisions by issuing authority, form a part of this specification section to extent indicated. Standards listed are identified buy issuing authority, authority abbreviation, designation number, title, or other designation established by issuing authority. Standards subsequently referenced herein are referred to by issuing authority abbreviation and standard designation.

B. American Society for Testing and Materials (ASTM):
   1. ASTM B209 - Specification for Aluminum and Aluminum-Alloy Sheet and Plate
   2. ASTM B221 - Specification for Aluminum and Aluminum-Alloy Extruded Bars, Rods, Wire, Shapes, and Tubes.

C. Air Movement and Control Association (AMCA):
   1. AMCA Standard 500 - Test Method for Louvers, Dampers, and Shutters
   2. AMCA Publication 261 - Directory of Licenses Products, current edition.

D. Sheet Metal and Air Condition Contractors National Association (SMACNA)
   1. SMACNA - Architectural Sheet Metal Manual, current edition.

E. American Architectural Manufacturer's Association (AAMA):

1. AAMA Standard 605 - Voluntary Specification for High Performance Organic Coating on Architectural Extrusions and Panels.

1.3 SYSTEM DESCRIPTION

A. Performance Requirements: Provide louvers, which have been manufactured, fabricated and installed to withstand loads from International Building Code – 2007 and to maintain performance criteria stated by Manufacturer without defects, damage, or failure.

B. Louver Performance: where louvers are indicated to comply with specific performance requirements, provide units whose performance ratings have been determined in compliance with Air Movement and Control Association (AMCA) Standard 500.

1.4 SUBMITTALS

A. General: Submit listed submittals in accordance with Conditions of the Contract and Division 1 Submittal Procedures section.

B. Product Data: Submit product data sheet for specified products.
1. Performance Certificates: Submit performance certification, if not included in product data

C. Shop Drawings: Submit shop drawings showing layout, profiles and product components, including anchorage, accessories, finish colors, patterns and textures.
1. Include information necessary for fabrication and installation of louvers. Indicate materials, sizes, thickness, fastenings and profiles.

D. Quality Assurance Submittals: Submit the following:
1. Test Reports: Certified test reports showing compliance with specified performance characteristics and physical properties.
    a. Submit certified test results from an approved testing laboratory showing that the louvers proposed meet the criteria specified herein.
2. Certificates: Product certificates signed by Manufacturer certifying materials comply with specified performance characteristics and criteria, and physical requirements.

1.5 DELIVERY, STORAGE & HANDLING

A. General: Comply with Division 1 Product Requirements Sections.

B. Ordering: Comply with Manufacturer’s ordering instructions and lead-time requirements to avoid construction delays.

C. Delivery: Deliver materials in Manufacturer's original, unopened, undamaged containers with identification labels intact.
   1. Deliver, store and handle products to avoid any distortion or damage due to moisture, physical abuse or other cause Louvers shall be free from nicks, scratches and blemishes. Replace defective or damaged materials with new.

1.6 PROJECT CONDITIONS

A. Field Measurements: Verify actual measurements/openings by field measurements before fabrication; show recorded measurements on shop drawings. Coordinate field measurements and fabrication schedule with construction progress to avoid construction delays.

1.7 WARRANTY

A. Project warranty refers to Conditions of the Contract for project warranty provisions. Manufacturer's Warranty: Submit, for Owner's acceptance, Manufacturer's standard warranty document executed by authorized company official. Manufacturer's warranty is in addition to, and not a limitation of, other rights owner may have under Contract Documents.

PART 2 - PRODUCTS

2.1 WALL LOUVERS

A. Manufacturers:
   1. Industrial Louvers Inc. (ILI)
   2. Airline Products Company. (APC)
   3. Ruskin Company (RC).

2.2 LOUVER ACCESSORIES

A. Exterior Aluminum Sill: Provide sill flashing of same material and finish as louvers where indicated on the drawings.

B. Louver Screens: Provide framed removable screens for exterior louvers.
   1. Screens shall be 1/8" (12.7 mm) mesh .063" (1.6 mm) aluminum wire mounted in extruded aluminum re-wireable frames.
   2. Locate screens on inside face of louvers.
   3. Screen frames shall have welded corners and be secured to the louver frame with machine screws, at each corner and at 12" (304.8 mm) c.o. between.

2.3 MATERIALS

A. Aluminum Sheet: ASTM B209 Alloy 3003 or 5005 with temper as required for forming, or as otherwise recommended by metal producer to provide required finish.

B. Aluminum Extrusions: ASTM B221, Alloy 6063.

C. Fastenings: Provide stainless steel screws and fasteners for aluminum louvers and zinc-coated or stainless steel screws and fasteners for steel louvers. Provide other accessories as required for complete and proper installation.

2.4 FABRICATION

A. Fabrication Requirements:
   1. Performance: Fabricate as required for optimum performance with respect to water penetration, strength, durability and uniform appearance.
   2. Size:
      a. Fabricate louvers in masonry walls to outside dimensions indicated, with allowance of 1/4” on each side for sealant joints.
      b. Verify sizes with final HVAC shop drawings, including detail dimensions of ductwork, dampers or other fittings abutting louvers.
   3. Field Measurements: Verify size, location and placement of louver units prior to fabrication.
   4. Shop Assembly:
      a. Fabricate to minimize field adjustments, splicing, mechanical joints and field assembly of units.
      b. Preassemble units in shop to greatest extent possible and disassemble as necessary for shipping and handling.
      c. Clearly mark units for reassemble and coordinated installation.
   5. Accessories: Include supports, anchorages and accessories required for complete assembly.
   6. Vertical Mullions: Provide vertical mullions of type and spacing indicated but not further apart than recommended by the Manufacturer.
   7. Horizontal Mullions: Provide horizontal mullions at horizontal joints between louver units except where continuous vertical assemblies are indicated.
   8. Connections: Join frame and blade members to one another by welding, except where field bolted connections between frame members are made necessary by size of louvers.
   9. Spacing: Maintain equal blade spacing to produce uniform appearance.

2.5 FINISHES (FACTORY)

A. Shop Finishing: Factory finish louvers and accessories with an organic coating.
   1. Organic Coating: Clean and prime exposed aluminum surfaces and apply a Kynar 500/Hylar 500 2-coat finish conforming to AAMA 605 in a

standard color to match building metal siding. Minimum dry film thickness shall be 1.2 mil.

B. Finish Protection: Provide finish protection as recommended by louver Manufacturer.

PART 3 - EXECUTION

3.1 MANUFACTURER'S INSTRUCTIONS

A. Compliance: Comply with Manufacturer's product data, including product technical bulletins, product catalog installation instructions, and product carton instructions for installation.

3.2 EXAMINATION

A. Site Verification of Conditions: Verify substrate conditions, which have been previously installed under other sections, are acceptable for product installation in accordance with Manufacturer's instructions.

3.3 INSTALLATION

A. Louver Installation:
1. Louvers shall be installed in accordance with Manufacturers approved shop drawings and as shown. Provide all necessary fastenings and anchors required to a complete installation. Units to be installed plumb, level and in proper alignment with adjacent work.
2. Form tight joints within work of this Section. Fit exposed connections accurately.
3. Louvers shall be protected from damage from subsequent building operations.
4. Protect metal surfaces from corrosion or galvanic action by application of a heavy coating of bituminous paint on surfaces, which shall be in contact with concrete, masonry or dissimilar metals.

END OF SECTION

SECTION 10350

FLAGPOLES

PART 1 - GENERAL

1.1 SUMMARY

A. Section includes flagpoles and accessories.

B. Related Sections:
1. Section 03300: Concrete base and foundation construction.

1.2 REFERENCES

A. ASTM International:
1. ASTM A53/A53M - Standard Specification for Pipe, Steel, Black and Hot-Dipped, Zinc-Coated, Welded and Seamless
2. ASTM A123/A123M - Standard Specification for Zinc (Hot-Dip Galvanized) Coatings on Iron and Steel Products
3. ASTM B221 - Standard Specification for Aluminum and Aluminum-Alloy Extruded Bars, Rods, Wire, Profiles, and Tubes
4. ASTM B241/B241M - Standard Specification for Aluminum and Aluminum-Alloy Seamless Pipe and Seamless Extruded Tube.

B. Copper Development Association Inc.:
1. CDA - Cooper Brass Bronze Design Handbook: Architectural Applications.

1.3 PERFORMANCE REQUIREMENTS

A. Flagpole With Flag Flying: Resistant without permanent deformation to 120 miles/hr wind velocity; non-resonant, safety design factor of 2.5.

B. Flagpole Without Flag: Resistant without permanent deformation to 120 miles/hr wind velocity; non-resonant, safety design factor of 2.5.

1.4 SUBMITTALS

A. Section 01330 - Submittal Procedures: Submittal procedures.

B. Shop Drawings: Indicate detailed dimensions, base or attachment details, anchor requirements, and imposed loads.

C. Shop Drawings: Indicate details of foundation system for ground-set flagpoles.

D. Product Data: Submit data on pole, accessories, and configurations.

E. Samples: Submit two 5 x 5 inch in size illustrating pole material, color, and finish.

1.5 CLOSEOUT SUBMITTALS

A. Section 01700 - Execution Requirements: Closeout procedures.

B. Operation and Maintenance Data: Submit Operation and Maintenance Data.

1.6 QUALITY ASSURANCE

A. Source Limitations: Obtain each flagpole as a complete unit, including fittings, accessories, bases, and anchorage devices, from a single Manufacturer.
   1. Obtain through one source from a single Manufacturer.

1.7 QUALIFICATIONS

A. Design flagpole foundation under direct supervision of Professional Engineer experienced in design of this Work and licensed in State of Texas.

1.8 DELIVERY, STORAGE, AND HANDLING

A. Section 01600 - Product Requirements: Product storage and handling requirements.

B. Spiral wrap flagpole with protective covering and pack in protective shipping tubes or containers.

C. Protect flagpole and accessories from damage or moisture.

PART 2 - PRODUCTS

2.1 FLAGPOLES

A. Manufacturers:
   1. American Flagpole Model
   2. Baartol Co., Inc. Model
   3. Concord Industries, Inc.
   4. Morgan-Francis Pole Model
   5. Substitutions: Section 01600 - Product Requirements.

B. Product Description: Pole Without Flag: Resist without permanent deformation, 120 miles/hr. wind velocity, non-resonant and per local code requirements.

2.2 COMPONENTS

A. Aluminum: ASTM B241/B241M, ASTM B221, 6063 alloy, T6 temper.

B. Outside Butt Diameter: 6 inches.

C. Outside Tip Diameter: 3 inches.

D. Nominal Wall Thickness: .188 inch.

E. Nominal Height: 30ft; measured from top of base.

F. Flagpole: Ground mounted type.

G. Flagpole Design: Cone tapered

H. Halyard: Interior type.

2.3 ACCESSORIES

A. Finial Ball: Aluminum, 6 inch diameter.

B. Truck Assembly: Concealed, Cast aluminum; revolving, stainless steel ball bearings, non-fouling.

C. Flag: 3 x 5 design size, fabric, owner provided.

D. Internal Halyard, Winch System: Manually operated winch with control stop device and removable handle, and stainless-steel cable halyard. Provide flush access door secured with cylinder lock.

E. Halyard Flag Snaps: Provide two chromium-plated bronze swivel snap hooks per halyard.
1. Provide with neoprene or vinyl covers.

F. Primer: Zinc rich type.

G. Hand Crank Operator: Removable type.

H. Foundation Tube Sleeve: Corrugated 16 gage steel, galvanized, depth as required by design and per Manufacturer requirements.

I. Pole Base Attachment: Sleeve; aluminum base with base cover.

J. Lighting Ground Rod: 36 inch long copper rod, 3/4 inch diameter.

K. Lightning Ground Cable: Copper No. 6 AWG, soft drawn.

L. Sand: ASTM C 33, fine aggregate.

2.4 FACTORY FINISHING

A. Metal Surfaces in Contact With Concrete: Asphaltic paint.

B. Aluminum: Mill finish, Natural Satin. Anodized to clear color.

C. Finial: Gold anodized finish.

PART 3 - EXECUTION

3.1 EXAMINATION

A. Section 01300 - Administrative Requirements: Coordination and project conditions.

B. Verify concrete foundation is ready to receive work and dimensions are as indicated on shop drawings.

3.2 PREPARATION

A. Coat metal sleeve surfaces below grade, in contact with cementitious surfaces, and in contact with dissimilar metals with asphaltic paint.

3.3 INSTALLATION

A. Install flagpole, base assembly, and fittings in accordance with Manufacturer's instructions and shop drawings.

B. Electrically ground flagpole installation.

C. Install foundation plate and centering wedges for flagpole base set in concrete base and fasten. Fill foundation tube sleeve with sand and compact.

D. Set aluminum flash collar in bed of polyurethane sealant.

3.4 ERECTION TOLERANCES

A. Section 01400 - Quality Requirements: Tolerances.

B. Maximum Variation From Plumb: 1 inch.

3.5 ADJUSTING

A. Section 01700 - Execution Requirements: Testing, adjusting, and balancing.

B. Clean surfaces.

C. Adjust operating devices so halyard and flag function smoothly.

END OF SECTION

SECTION 10440

INTERIOR SIGNAGE

PART 1 - GENERAL

1.1 SUMMARY

A. Section includes interior signs.

B. Related Sections:
1. Section 15075 - Mechanical Identification.

1.2 REFERENCES

A. Standards of the following as referenced:
1. American National Standards Institute (ANSI).

B. Industry standards:
1. Department of Justice, Office of the Attorney General, "Americans with Disabilities Act", Public Law 101-336, (ADA)
2. ANSI A117.1: Providing Accessibility and Useability for Physically Handicap People, 1986 edition
3. Federal Register Part III, Department of Justice, Office of the Attorney General, 28 CFR Part 36: Nondiscrimination on the Basis of Disability by Public Accommodations and in Commercial Facilities, Final Rule, July 26, 1991
4. Federal Register Part II, Architectural and Transportation Barriers Compliance Board, 36 CFR Part 1191: Americans with Disabilities Act (ADA) Accessibility Guidelines for Buildings and Facilities; Amendment to Final Guidelines, September 6, 1991.

1.3 SUBMITTALS

A. Section 01330 - Submittal Procedures: Submittal procedures.

B. Shop Drawings: Indicate sign styles, lettering font, foreground and background colors, locations, overall dimensions of each sign.

C. Samples: Submit two signs, in size illustrating type, style, letter font, and colors specified; method of attachment.

D. Manufacturer's Installation Instructions: Submit installation template and attachment devices.

1.4 QUALITY ASSURANCE

A. Provide products of acceptable Manufacturers that have been in satisfactory use in similar service for three years. Use experienced installers.

B. Deliver, handle, and store materials in accordance with Manufacturer's instructions.

C. Comply with governing codes and regulations.

D. Regulations: ADAAG / TAS (Texas Accessibility Standards)

1.5 DELIVERY, STORAGE, AND HANDLING

A. Section 01600 - Product Requirements: Product storage and handling requirements.

B. Package signs, labeled in name groups.

C. Store adhesive attachment tape at ambient room temperatures.

1.6 ENVIRONMENTAL REQUIREMENTS

A. Section 01600 - Product Requirements: Environmental conditions affecting products on site.

B. Do not install signs when ambient temperature is lower than recommended by Manufacturer.

C. Maintain this minimum temperature during and after installation of signs.

PART 2 - PRODUCTS

2.1 INTERIOR SIGNS

A. Manufacturers:
1. APCO Graphics
2. ASI Sign Systems
3. Corpus Christi Stampworks
4. Best Signs
5. Substitutions: Section 01600 - Product Requirements.

2.2 COMPONENTS

A. Injection Molded Signs: Acrylic plastic:
1. Sign Color: Color as selected from Manufacturers full range of colors
2. Character Color: Contrasting color
3. Total Thickness: 1/8 inch
4. Height: 3 inches
5. Edges: Beveled
6. Character Font: Helvetica.

B. Raised Letter Signs, Base Material: Solid color acrylic plastic:
   1. Total Thickness: 1/8 inch
   2. Height: 3 inches
   3. Edges: Beveled
   4. Character Font: Helvetica.

C. Raised Character Size and Style: Acrylic plastic, character adhered to base material:
   1. Character Color: White
   2. Character Thickness: 1/8 inch
   3. Edges: Beveled
   4. Character Font: Helvetica
   5. Character Case: Upper case.

D. Graphic Style: Handicapped type.

2.3 ACCESSORIES

A. Mounting Hardware: Per Manufacturers standard

PART 3 - EXECUTION

3.1 EXAMINATION

A. Section 01310 - Project Management and Coordination: Verification of existing conditions before starting Work.

3.2 INSTALLATION

A. Install signs after surfaces are finished, in locations scheduled. Install signage holders in locations with mounting types indicated in accord with reviewed shop drawings. Square, plumb, and level units.

B. Install materials and systems in proper relation with adjacent construction and with uniform appearance. Coordinate with work of other sections.

C. Position strike side of door; level. Conform to ADA requirements for tactile graphics signage.

3.3 CLEANING

A. Clean exposed surfaces not more than 48 hours prior to Date of Substantial Completion in accord with Manufacturers written cleaning instructions.

3.4 SCHEDULES

A. Service Room Signs: Plaque signs, 3 inches high, face color, core color, "CONFERENCE ROOM", “MEN”, “WOMEN”, “TELEPHONE/COMMUNICATIONS ROOM”, "STORAGE ROOM", and "ELECTRICAL ROOM"; at each respective room location.

B. Rest Room Door Graphic: 6 inches high, "male" and "female" graphic image; color, located on each rest room door.

END OF SECTION

SECTION 10500

LOCKERS

PART 1 - GENERAL

1.1 SUMMARY

A. Section includes metal lockers, accessories and locker benches.

B. Related Sections:
1. Section 06114 - Wood Blocking and Curbing: Wood grounds and attachment strips.

1.2 REFERENCES

A. ASTM International:
1. ASTM A653/A653M - Standard Specification for Steel Sheet, Zinc-Coated (Galvanized) or Zinc-Iron Alloy-Coated (Galvannealed) by the Hot-Dip Process.

1.3 SUBMITTALS

A. Section 01330 - Submittal Procedures: Submittal procedures.

B. Shop Drawings: Include plans, elevations, sections, details, and attachments to other work.
1. Show base, sloping tops, filler panels and other accessories.
2. Include locker identification system

C. Product Data: Submit data on locker types, sizes, accessories and installation instructions.

D. Samples: Submit two 3 x 6 inches in size, of each color selected; applied to specified base metal.
1. Samples for Initial Selection: For units with factory-applied color finishes.

E. Manufacturer's Installation Instructions: Installation instructions, submit installation template and attachment devices.

F. Maintenance Data: For adjusting, repairing, and replacing locker doors and latching mechanisms to include in maintenance manuals.

G. Warranty: Special warranty specified in this Section.

1.4 QUALITY ASSURANCE

A. Installer Qualifications: An authorized representative of metal locker Manufacturer for installation and maintenance of units required for this Project.

B. Source Limitations: Obtain metal lockers and accessories through one source from a single Manufacturer.

C. Product Options: Drawings indicate size, profiles, and dimensional requirements of metal lockers and are based on the specific system indicated. Refer to Division 1 Section "Product Requirements."
   1. Do not modify intended aesthetic effects, as judged solely by Architect, except with Architect's approval. If modifications are proposed, submit comprehensive explanatory data to Architect for review.

D. Regulatory Requirements: Where metal lockers are indicated to comply with accessibility requirements, comply with the U.S. Architectural & Transportation Barriers Compliance Board's "Americans with Disabilities Act (ADA), Accessibility Guidelines for Buildings and Facilities (ADAAG)". Comply with Texas Accessibility Standards (TAS) Guidelines.
   1. Provide not less than 1 shelf located no higher than 48 inches above the floor for forward 54 inches above the floor for side reach.
   2. Provide 1 shelf located at bottom of locker no lower than 15 inches above the floor for forward 9 inches above the floor for side reach.
   3. Provide hardware that does not require tight grasping, pinching, or twisting of the wrist, and that operates with a force of not more than 5 lbf.

1.5 WARRANTY

A. Special Warranty: Manufacturer's standard form in which Manufacturer agrees to repair or replace components of metal lockers that fail in materials or workmanship, excluding finish, within specified warranty period.
   1. Failures include, but are not limited to, the following:
      a. Structural failures.
      b. Faulty operation of latches and other door hardware.
   2. Damage from deliberate destruction and vandalism is excluded.

B. Warranty Period for Metal Lockers: Two years from date of Substantial Completion.

1.6 EXTRA MATERIALS

A. Furnish extra materials described below, before construction begins, that match products installed and that are packaged with protective covering for storage and identified with labels describing contents.
   1. Full-size units of the following metal locker hardware items equal to 10 percent of amount installed for each type and finish installed, but no fewer than 5 units:
      a. Identification plates.
      b. Hooks.

1.7 DELIVERY, STORAGE, AND PROTECTION

A. Section 01600 - Product Requirements: Product storage and handling requirements.

B. Protect locker finish and adjacent surfaces from damage.

PART 2 - PRODUCTS

2.1 LOCKERS

A. Manufacturers:
1. List Industries, Inc.
2. Lyon Metal Products, Inc.
3. Penco Products, Inc.
4. Republic Storage Systems Co., Inc.
5. Substitutions: Section 01600 - Product Requirements.

B. Product Description: Lockers, Free standing full height double tier lockers; with metal base; with sloped tops; and padlock hasps.

2.2 COMPONENTS

A. Sheet Steel: ASTM A653/A653M, commercial quality, coating class G90, stretcher leveled; to the following minimum thicknesses:
1. Body and Shelf: 16 gage inch
2. Door Outer Face: 16 gage inch
3. Door Inner Face: 20 gage inch
4. Door Frame: 16 gage inch
5. Hinges: 14 gage inch
6. Base: 12 gage inch
7. Sloping Top: 20 gage inch
8. Trim: 20 gage inch.

2.3 ACCESSORIES

A. For Each Locker: Three single prong wall hooks and one ceiling double prong hook.

B. Locker Benches: Stationary type; bench top of laminated red oak species wood, stained, sealed and varnished; pedestals of brushed chrome steel, 19 inches high.
1. ADA bench: 24” x 48” with four pedestals
2. Shower bench: 9” x 48” on pedestals.

2.4 FABRICATION

A. Locker Units:
1. Width: 12 inches
2. Depth: 15 inches
3. Height: 72 inches

4. Configuration: double tier
5. Mounting: Free standing
6. Base: Metal base to be mounted on concrete base
7. Base Height: 4 inch
8. Top: Sloped metal with closures
9. Locking: Equipped for padlock hasps
10. Ventilation Method: Louvered top and bottom frame and top and bottom of door
11. Type: Conventional.

B. Locker Body: Formed and flanged; with steel stiffener ribs; electric spot welded.

C. Frames: Formed channel shape, welded and ground flush, welded to body, resilient gaskets and latching for quiet operation.

D. Doors: Hollow channel construction, 1-3/16 inch thick; welded construction, channel reinforced top and bottom with intermediate stiffener ribs, grind and finish edges smooth.

E. Hinges: Two for doors under 42 inches high; three for doors over 42 inches high; weld securely to locker body and door.

F. Locking device supplied by Owner.

G. Number Plates: Furnish rectangular shaped aluminum plates. Form numbers ½" inch high of block font style, in contrasting color.

H. Furnish ventilation openings at top and bottom of each locker.

I. Form recess for operating handle and locking device.

J. Finish edges smooth without burrs.

K. Fabricate sloped metal tops, ends and closure pieces.

L. Furnish end panels and filler strips.

M. Fabricate 4 inch high steel bases with end closures.

2.5 FACTORY FINISHING

A. Clean, degrease, and neutralize metal; prime and finish with two coats of baked enamel.

B. Paint locker units of 1 color throughout.

C. Color: color as selected from Manufacturer's standard range.

PART 3 - EXECUTION

3.1 EXAMINATION

A. Section 01300 - Administrative Requirements: Coordination and project conditions.

B. Take site dimensions affecting this work

C. Verify that field measurements are as indicated on shop drawings.

D. Verify prepared bases are in correct position and configuration.

E. Verify bases and embedded anchors are properly sized.

3.2 INSTALLATION

A. Install lockers plumb and square.

B. Place and secure on prepared base.

C. Secure lockers with anchor devices to suit substrate materials. Secure both to wall and to base.

D. Bolt adjoining locker units together to provide rigid installation.

E. Install end panels, filler panels, sloped tops, and bases. Utilize concealed fasteners.

F. Install accessories.

G. Replace components not operating smoothly.

H. Protect metal lockers from damage, abuse, dust, dirt, stain, or paint.

I. Do not permit metal locker use during construction.

3.3 CLEANING

A. Section 01700 - Execution Requirements: Final cleaning.

B. Clean locker interiors and exterior surfaces.

END OF SECTION

SECTION 10523

FIRE EXTINGUISHERS AND CABINETS

PART 1 - GENERAL

1.1 SUMMARY

A. Section includes fire extinguishers; fire blankets; fire extinguisher cabinets; and brackets for wall mounting.

B. Related Sections:
1. Section 06114 - Wood Blocking and Curbing: Wood blocking and shims
2. Section 09900 - Paints and Coatings: Field applied paint finish

1.2 REFERENCES

A. National Fire Protection Association:
1. NFPA 10 - Standard for Portable Fire Extinguishers.

B. Underwriters Laboratories Inc.:
1. UL - Fire Protection Equipment Directory.

1.3 PERFORMANCE REQUIREMENTS

A. Conform to NFPA 10 and applicable code.

B. Provide extinguishers classified and labeled by Underwriters Laboratories Inc. for purpose specified and indicated.

C. Provide fire extinguisher cabinets classified and labeled by Underwriters Laboratories Inc. for purpose specified and indicated.

1.4 SUBMITTALS

A. Section 01330 - Submittal Procedures: Submittal procedures.

B. Shop Drawings: Indicate cabinet physical dimensions, rough-in measurements for recessed cabinets, locations, and fire ratings.

C. Product Data: Submit extinguisher operational features, color and finish, and anchorage details.

D. Manufacturer's Installation Instructions: Submit special criteria and wall opening coordination requirements.

E. Manufacturer's Certificate: Certify Products meet or exceed specified requirements.

1.5 CLOSEOUT SUBMITTALS

A. Section 01700 - Execution Requirements: Closeout procedures.

B. Operation and Maintenance Data: Submit test, refill or recharge schedules and re-certification requirements.

1.6 ENVIRONMENTAL REQUIREMENTS

A. Section 01600 - Product Requirements: Environmental conditions affecting products on site.

B. Do not install extinguishers when ambient temperature is capable of freezing extinguisher ingredients.

PART 2 - PRODUCTS

2.1 FIRE EXTINGUISHERS

A. Manufacturers:
1. Larsen's Manufacturing Co. Model MP Series MP10
2. J. L. Industries Model Cosmic
3. Substitutions: Section 01600 - Product Requirements.

B. Dry Chemical Type: Cast steel tank, with pressure gage; Class A, B, C, Size 10 size and classification as scheduled.

C. Extinguisher Finish: Steel, enamel to color as selected.

2.2 FIRE EXTINGUISHER CABINETS (FEC)

A. Manufacturers:
1. Larsons Model Occult Series, O-2409
2. J. L. Industries Model Academy
3. Substitutions: Section 01600 - Product Requirements.

B. Metal: Formed sheet steel, galvanized; 0.036 inch thick base metal.

C. Configuration: Semi-recessed type, sized to accommodate accessories exterior nominal dimensions of inch 10 wide x 24 inch high x 6 inch deep.

D. Trim Type: Returned to wall surface, with 2 ½" inch projection, ¾" inch trim wide face.

E. Aluminum Door, Solid type: Reinforced for flatness and rigidity; clear, satin finish.

F. Cabinet Mounting Hardware: Appropriate to cabinet.

G. Form cabinet enclosure with right angle inside corners and seams. Form perimeter trim.

H. Pre-drill for anchors.

I. Hinge doors for 180 degree opening with continuous piano hinge. Furnish roller type catch.

J. Weld, fill, and grind components smooth.

K. Finishing Cabinet Exterior Trim and Door: Clear Anodized, satin finish with Diecut lettering (black letters) with Vertical lettering style.

L. Finishing Cabinet Interior: white, baked enamel.

2.3 ACCESSORIES

A. Graphic Identification: FIRE EXTINGUISHER.

2.4 MOUNTING BRACKETS (FEB)

A. Mounting Brackets: Manufacturer's standard galvanized steel, designed to secure fire extinguisher to wall or structure, of sizes required for types and capacities of fire extinguishers indicated, with plated or baked-enamel finish.
   1. Color: Red.

B. Identification: Lettering complying with authorities having jurisdiction for letter style, size, spacing, and location. Locate as indicated by Architect.
   1. Identify bracket-mounted fire extinguishers with the words "FIRE EXTINGUISHER" in red letter decals applied to mounting surface.
      a. Orientation: Vertical Horizontal.

PART 3 - EXECUTION

3.1 EXAMINATION

A. Section 01300 - Administrative Requirements: Coordination and project conditions.

B. Verify rough openings for cabinet are correctly sized and located.

C. Examine walls and partitions for suitable framing depth and blocking where semi-recessed cabinets will be installed.

D. Examine fire extinguishers for proper charging and tagging.
   1. Remove and replace damaged, defective, or undercharged units.

E. Proceed with installation only after unsatisfactory conditions have been corrected.

3.2 INSTALLATION

A. Prepare recesses for semi-recessed fire-protection cabinets as required by type and size of cabinet and trim style.

B. Install cabinets plumb and level in wall openings, 48 inches from finished floor to fire extinguisher handle. Verify and install according with most recent codes and regulations.

C. Fire-Protection Cabinets: Fasten fire-protection cabinets to structure, square and plumb.
   1. Unless otherwise indicated, provide semi-recessed fire-protection cabinets.
   2. Fasten mounting brackets to inside surface of fire-protection cabinets, square and plumb.
   3. Secure rigidly in place.

D. Place extinguishers and accessories in cabinets.

E. Mounting Brackets: Fasten mounting brackets to surfaces, square and plumb, at locations indicated.

3.3 ADJUSTING AND CLEANING

A. Remove temporary protective coverings and strippable films, if any, as fire-protection specialties are installed, unless otherwise indicated in Manufacturer's written installation instructions.

B. Adjust fire-protection cabinet doors to operate easily without binding. Verify that integral locking devices operate properly.

C. On completion of fire-protection cabinet installation, clean interior and exterior surfaces as recommended by Manufacturer.

D. Touch up marred finishes, or replace fire-protection cabinets that cannot be restored to factory-finished appearance. Use only materials and procedures recommended or furnished by fire-protection cabinet Manufacturer.

E. Replace fire-protection cabinets that have been damaged or have deteriorated beyond successful repair by finish touchup or similar minor repair procedures.

3.4 SCHEDULES

A. Place 4 cabinets and extinguishers (FEC) where directed by Architect / Engineer.

B. Place 6 brackets and extinguishers (FEB) where directed by Architect / Engineer.

END OF SECTION

SECTION 10800

TOILET ACCESSORIES

PART 1 - GENERAL

1.1 SUMMARY

A. Section includes toilet accessories; shower accessories; and utility room accessories.

B. Related Sections:
1. Section 06114: In-wall framing and plates for support of accessories
2. Section 09300 - Tile: Ceramic washroom accessories
3. Section 10170 - Plastic Toilet Compartments

1.2 REFERENCES

A. ASTM International:
1. ASTM A123/A123M - Standard Specification for Zinc (Hot-Dip Galvanized) Coatings on Iron and Steel Products
2. ASTM A269 - Standard Specification for Seamless and Welded Austenitic Stainless Steel Tubing for General Service
3. ASTM A653/A653M - Standard Specification for Steel Sheet, Zinc-Coated (Galvanized) or Zinc-Iron Alloy-Coated (Galvannealed) by the Hot-Dip Process
4. ASTM A666 - Standard Specification for Austenitic Stainless Steel Sheet, Strip, Plate, and Flat Bar
5. ASTM B456 - Standard Specification for Electrodeposited Coatings of Copper Plus Nickel Plus Chromium and Nickel Plus Chromium
6. ASTM C1036 - Standard Specification for Flat Glass.

B. Federal Specification Unit:
1. FS A-A-3002 - Mirrors, Glass.

1.3 SUBMITTALS

A. Section 01330 - Submittal Procedures: Submittal procedures.

B. Product Data: Submit data on accessories describing size, finish, details of function, attachment methods.
1. Construction details and dimensions
2. Anchoring and mounting requirements, including requirements for cutouts in other work and substrate preparation
3. Material and finish descriptions
4. Features that will be included for Project
5. Manufacturer's warranty.

C. Product Schedule: Indicating types, quantities, sizes, and installation locations by room of each accessory required. Utilize numbers indicated in toilet accessory schedule in this specification.
   1. Identify locations using room designations indicated on Drawings.
   2. Identify products using designations indicated on Drawings.

D. Manufacturer's Installation Instructions: Submit special procedures, conditions requiring special attention.

E. Maintenance Data: For toilet and bath accessories to include in maintenance manuals.

1.4 COORDINATION

A. Section 01300 - Administrative Requirements: Coordination and project conditions.

B. Coordinate the Work with placement of internal wall reinforcement and reinforcement of toilet partitions to receive anchor attachments.

1.5 WARRANTY

A. Special Mirror Warranty: Manufacturer's standard form in which Manufacturer agrees to replace mirrors that develop visible silver spoilage defects and that fail in materials or workmanship within specified warranty period.
   1. Warranty Period: 15 years from date of Substantial Completion.

PART 2 - PRODUCTS

2.1 TOILET AND BATH ACCESSORIES

A. Manufacturers:
   1. American Specialties, Inc. Model Traditional Collection
   2. Bobrick Washroom Accessories Model Classic Series
   3. Bradley Corp. Model Contemporary Series
   4. Substitutions: Section 01600 - Product Requirements.

2.2 COMPONENTS

A. Accessories - General: Shop assembled, free of dents and scratches and packaged complete with anchors and fittings, steel anchor plates, adapters, and anchor components for installation.
   1. Grind welded joints smooth
   2. Fabricate units made of metal sheet of seamless sheets, with flat surfaces.

B. Keys: Furnish keys for each accessory to Owner.

C. Stainless Steel Sheet: ASTM A 666, Type 304. Satin finish.

D. Stainless Steel Tubing: ASTM A269, stainless steel.

E. Mirror Glass: Float glass, Type I, Class 1, Quality q2 (ASTM C 1036), with silvering, copper coating, and suitable protective organic coating to copper backing in accordance with FS A-A-3002.

F. ABS Plastic: Acrylonitrile-butadiene-styrene resin formulation.

G. Adhesive: Two component epoxy type, waterproof.

H. Fasteners: Screws, bolts, and other devices of same material as accessory unit and tamper-and-theft resistant where exposed, and of galvanized steel where concealed.

I. Expansion Shields: Fiber, lead, or rubber as recommended by accessory Manufacturer for component and substrate.

2.3 TOILET ROOM ACCESSORIES

A. Toilet Paper Dispenser with Shelf: Double roll surface-mounted, dual side-by-side partition mounting, stainless steel unit with pivot hinge.
1. Product: B-2840 manufactured by Bobrick.

B. Combination Towel Dispenser/Waste Receptacle: Recessed with projecting waste receptacle, stainless steel; seamless wall flanges, continuous piano hinges.
1. Waste receptacle liner: Reusable, heavy-duty vinyl
2. Towel dispenser capacity: 600 C-fold or 800 multifold
3. Waste receptacle capacity: 12 gallons
4. Product: B-3942 manufactured by Bobrick.

C. Paper Towel Dispenser: Folded paper type, stainless steel, semi-recessed, with viewing slots on sides as refill indicator.
1. Capacity: 400 C-fold minimum
2. Product: B-262 manufactured by Bobrick.

D. Soap Dispenser: Liquid soap dispenser, wall-mounted, surface, for with cover and horizontal stainless steel tank and working parts; push type soap valve, check valve, and window gage refill indicator.
1. Minimum Capacity: 40 ounces
2. Product: B-40 manufactured by Bobrick.

E. Mirrors: Stainless steel framed, 6 mm thick tempered glass mirror.
1. Size: As indicated on Drawings
2. Frame: angle shapes, with mitered and welded and ground corners bright annealed finish
3. Backing: Full-mirror sized, minimum 0.03 inch galvanized steel sheet and nonabsorptive filler material
4. Product: B-290 3672 manufactured by Bobrick
5. Product: B-290 3624 manufactured by Bobrick

F. Grab Bars: Stainless steel, 1-1/2 inches outside diameter, minimum 0.05 inch wall thickness, nonslip grasping surface finish, concealed flange mounting; 1-1/2 inches clearance between wall and inside of grab bar.
   1. Length and configuration: As indicated on Drawings, comply with ADA and TAS requirements.
   2. Product: B-6806x36 and B-6806x42 manufactured by Bobrick.

G. Partition-Mounted Toilet Tissue Dispenser and Sanitary Napkin Disposal Unit: Stainless steel back-to-back partition mounting with adjustable flanges, self-closing door, locking bottom panel with full-length stainless steel piano-type hinge, removable receptacle.
   1. Product: B-3570 manufactured by Bobrick.

H. Tissue Dispenser and Sanitary Napkin Disposal Unit: Stainless steel, recessed, self-closing door, locking bottom panel with full-length stainless steel piano-type hinge, removable receptacle.
   1. Product: B-35701 manufactured by Bobrick.

I. Rod, Rings and Curtain: At each shower
   1. Bobrick: B-6107 Classic Series Extra-Heavy-Duty Shower Curtain Rod with 2 ½" Square Flange. Type-304 stainless steel, satin finish, 18-gauge
   2. Bobrick: 204-2 Vinyl Shower Curtain (42"W x 72" H)
   3. Bobrick: 204-1 Shower Curtain Hooks, seven (7) required per each shower curtain location.

J. Surface Mounted Hat, Coat, and Robe Hook: 1 each at each shower and at each bench.
   1. Bobrick: B-7671, Classic Series
   2. Type: Bright polished stainless steel.

K. Undercounter Lavatory Protective Enclosure
   1. Truebro, Inc.: Lav Shield, molded rigid vinyl, high impact stain resistant, white color.

2.4 UTILITY ROOM ACCESSORIES

A. Combination Utility Shelf/Mop and Broom Holder: 0.05 inch thick stainless steel, Type 304, with 1/2 inch returned edges, 0.06 inch steel wall brackets.
   1. Drying rod: Stainless steel, 1/4 inch diameter
   2. Hooks: 3, 0.06 inch stainless steel rag hooks at shelf front
   3. Mop/broom holders: 4 spring-loaded rubber cam holders at shelf front
   4. Length: 36 inches
   5. Length: Manufacturer's standard length for number of holders/hooks
   6. Product: B-224x36 manufactured by Bobrick.

2.5 FACTORY FINISHING

A. Stainless Steel: No. 4 satin brushed finish.

B. Back paint components where contact is made with building finishes to prevent electrolysis.

PART 3 - EXECUTION

3.1 EXAMINATION

A. Section 01300 - Administrative Requirements: Coordination and project conditions.

B. Verify exact location of accessories for installation.

C. Verify field measurements are as indicated on product data.

D. See Section 06100 for installation of blocking in walls and ceilings.

3.2 PREPARATION

A. Deliver inserts and rough-in frames to site for timely installation.

B. Provide templates and rough-in measurements as required.

3.3 INSTALLATION

A. Install accessories according to Manufacturers' written instructions, using fasteners appropriate to substrate indicated and recommended by unit Manufacturer. Install units level, plumb, and firmly anchored in locations and at heights indicated.

B. Grab Bars: Install to withstand a downward load of at least 250 lbf, when tested according to method in ASTM F 446.

C. Mounting Heights and Locations: As required by accessibility regulations.

3.4 ADJUSTING AND CLEANING

A. Adjust accessories for unencumbered, smooth operation. Replace damaged or defective items.

B. Remove temporary labels and protective coatings.

C. Clean and polish exposed surfaces according to Manufacturer's written recommendations.

3.5 SCHEDULES

A. See drawings for proposed locations.

END OF SECTION

SECTION 11132

PROJECTION SCREENS

PART 1 - GENERAL

1.1 SUMMARY

A. Section Includes:
   1. Electrically operated concealed mounted projection screens
   2. Related accessories

B. Related Sections:
   1. Section 09510 - Acoustical Ceilings
   2. Electrical Sections, Electrical characteristics and wiring connections

1.2 REFERENCES

A. Underwriters Laboratories Inc.:
   1. UL - Electrical Appliance and Utilization Equipment Directory.

1.3 SUBMITTALS

A. Section 01330 - Submittal Procedures: Requirements for submittals.

B. Shop Drawings: Submit Manufacturer’s wiring diagram for electrically operated controls. Also detailed drawings concealed mounting.

C. Product Data: Submit Manufacturer’s product data on materials, finishes, operation of unit, and electrical requirements.

D. Manufacturer's Installation Instructions: Submit detailed installation instructions including rough-in measurements.

E. Manufacturer's Certificate: Certify Product meet or exceed specified requirements.

1.4 CLOSEOUT SUBMITTALS

A. Section 01700 – Project Close-out

B. Operation and Maintenance Data:
   1. Submit parts catalog with complete list of equipment replacement parts; identify each entry with equipment description and identifying code.
   2. Submit technical information for servicing operating equipment.

1.5 QUALITY ASSURANCE

A. Products Requiring Electrical Connection: Listed and classified by Underwriters Laboratories, Inc as suitable for purpose specified and indicated.

B. Maintain one copy of each document on site.

1.6 QUALIFICATIONS

A. Manufacturer: Company specializing in manufacturing Products specified in this section with minimum three years documented experience.

B. Installer: Company specializing in performing work of this section with minimum three years documented experience.

1.7 DELIVERY, STORAGE, AND HANDLING

A. Section 01600 - Products and Substitutions

B. Deliver projection screens after building is enclosed, other work within spaces where screens are to be installed is substantially complete, and installation of screens is ready to take place.

C. Protect projection screens from damage before, during and after installation.

1.8 FIELD MEASUREMENTS

A. Verify field measurements prior to fabrication.

1.9 COORDINATION

A. Section 01300 - Submittals

B. Coordinate installation of ceilings, walls, electric service power characteristics, and location.

PART 2 - PRODUCTS

2.1 PROJECTION SCREEN - ELECTRICALLY OPERATED CONCEALED

A. Manufacturers:
   1. Draper. Model Ambassador
   2. Draper: Model Signature / Series E
   3. Substitutions: Section 01600 – Products and Substitutions

B. Type: Motor-operated screen, fully recessed mounting with automatic ceiling closure.

C. Screen Case:

1. Sides and Top: Wood with metal-lined motor compartment and aluminum bottom panels, factory-primed and constructed.
2. Bottom Panels: Offset mounted to case in position where bottom surfaces align flush with finished surfaces of adjoining ceiling. Recess bottom edges of case surrounding panels by depth of, and conceal behind overlapping ceiling finish.
3. Automatic Operation: Bottom of case composed of two panels fully enclosing screen and motor, one panel attached to case by continuous hinge and connected to drive mechanism to open and close automatically when screen is lowered and fully raised, respectively, and other panel removable or operable for access to interior of case.
4. Top: Double top for extra rigidity and sound deadening.

2.2 ELECTRICAL CHARACTERISTICS AND COMPONENTS

A. Section 16123 – Building Wire and Cable.

B. Requirements for electrical characteristics.
1. 120 volts, single phase, 60 Hz.

C. Disconnect Switch: Factory mount disconnect switch on equipment.

2.3 SCREEN SURFACES

A. Screen: Optical-quality spherical glass beads, chemically coated and applied to backing, forming optical-quality screen surface. Surface 3 times brighter than matte white.

B. Mildew and flame resistant with top edge mounted on, and securely anchored to, rigid metal roller supported by self-aligning bearings in brackets.

C. Size: 7’ x 9’ viewing surface.

2.4 PROJECTION SCREEN MOTORS

A. Motors:
1. Instant reversing, gear drive motor of size and capacity recommended by screen Manufacturer, with permanently lubricated ball bearing, automatic thermal overload protection, preset limit switches to automatically stop screen in UP and DOWN position, and positive stop action to prevent coasting.

B. Screen Control: Single station, Electric push button, UL listed key-operated switch for screen with metal device box and cover plate for flush wall mounting and for connection to 120 Volts AC electric power supply.

PART 3 - EXECUTION

3.1 EXAMINATION

A. Section 01300 - Administrative Requirements: Verification of existing conditions before starting work.

B. Verify rough-in opening and conditions are acceptable.

C. Verify electrical power is available and of correct characteristics.

3.2 INSTALLATION

A. Install projection screens at location indicated on Drawings.

B. Coordinate with electrical connection.

C. Coordinate installation with ceiling finishes for application of ceiling finish to screen case bottom panels.

D. Securely anchor to supporting substrate.

E. Install to produce smoothly operating screen with plumb and straight vertical edges and plumb and flat viewing surfaces when lowered.

F. Test electrically-operated units to verify screen controls, limit switches, closure and other operating components are in optimum functioning conditions.

3.3 ADJUSTING

A. Section 01700 - Execution Requirements: Requirements for balancing and adjusting.

B. Adjust installed unit for smooth and balanced operation.

3.4 CLEANING

A. Section 01700 – Project Close-out

B. Remove protective coverings from finished surfaces. Clean surfaces and components ready for inspection.

3.5 DEMONSTRATION

A. Demonstrate electrically operated projection screens to Owner.

3.6 PROTECTION OF FINISHED WORK

A. Section 01400 - Quality Requirements: Tolerances.

B. Do not permit use of projection screens after installation.

END OF SECTION

SECTION 11140

FUEL DISPENSING SYSTEM

PART 1 - GENERAL

1.1 RELATED DOCUMENTS

A. The general provisions of the Contract, including General and Supplementary Conditions, apply to the work specified in this Section.

1.2 RELATED WORK SPECIFIED ELSEWHERE

A. Sections including but not limited to the following:
   1. Section 15400 - Plumbing Piping And Associated Materials.

B. All other Divisions of the Contract Documents. Refer to each Division's specifications and drawings for all requirements.

1.3 SCOPE

A. Provide all equipment, materials, labor, supervision, and services necessary for or incidental to the installation of a complete unleaded gasoline and diesel fuel dispensing system.

B. Work includes:
   1. Lightweight double wall steel aboveground, 2 hour fire-rated cylindrical UL 2085 storage tank, with lightweight thermal insulation for fire protection, one - 4,000 gallon cylindrical tank diesel, and one 2,000 gallon cylindrical tank gas.
   2. Dispenser units pumps nozzles.
   3. Tank level and leak detection system.
   4. Appurtenances including pumps, dispensers, filters, hose, swivels, breakaways, high hang retractors, spill control, emergency/updraft venting, pipe, valves and fittings.

1.4 QUALIFICATIONS

A. Manufacturer: company specializing in the Manufacturer of products specified in this Section with minimum of five years experience.

B. Calibration of dispensers shall be performed by a Contractor licensed by the Texas Department of Agriculture and by a registered service person.

1.5 SUBMITTALS

A. Shop drawings and product data in accordance with division 1 showing dimensions, connections, capacities, pressure ratings, arrangement, accessories, controls and wiring.

B. Manufacturer's descriptive literature and specification with capacities, efficiencies, head versus flow curve, installation and operating instructions, list of recommended spare parts, and storage requirements.

C. Nearest authorized service representatives.

D. Results of dispenser calibration tests including registration number of service person and the certificate of dispenser calibrator.

E. Documentation showing successful completion of UL 2085 for the complete aboveground tank.

1.6 QUALITY ASSURANCE

A. Use adequate numbers of skilled workmen who are thoroughly trained and experienced in the necessary crafts and who are completely familiar with the specified requirements and the methods needed for proper performance of the work of this Section.

B. Without additional cost to the Owner, provide such other labor and materials as are required to complete the work of this Section in accordance with the requirements of governmental agencies having jurisdiction, regardless of whether such materials and associated labor are called for elsewhere in these Contract Documents.

C. When requested, provide the Architect with Manufacturer's certificate that materials meet or exceed minimum requirements as specified.

D. Standards: the specifications and standards of the following organizations are by reference made a part of these specifications. All mechanical work, unless otherwise indicated, shall comply with the requirements and recommendations wherever applicable:
1. National Fire protection Association (NFPA) 30 Flammable and combustible Liquids Code
2. National Fire Protection Association (NFPA) 30A, Automotive and Marine Service Station code
3. Underwriters Laboratories, Inc. (UL) 2085, Protected Tank and Fire Resistive Tank Listing, with ballistic and impact resistance ratings
4. Underwriters Laboratories, Inc. (UL) 142, Steel Aboveground Tanks for Flammable and Combustion Liquids
5. Underwriters Laboratories, Inc. (UL) 1238, Control Equipment for Use with Flammable Liquid Dispensing Devices
6. Underwriters Laboratories, Inc. (UL) 567, Pipe Connectors for Flammable and Combustible Liquids and LP-Gas
7. Underwriters laboratories, Inc. (UL) 860, Pipe Unions for Flammable and Combustible Liquids and Fire Protection Service
8. Underwriters Laboratories, Inc. (UL) 87, Power-operated Dispensing Devices for Petroleum Products
9. Underwriters Laboratories, Inc. (UL) 842, Valves for Flammable Fluids
10. Underwriters Laboratories, Inc. (UL) 1709
11. American Petroleum Institute (API)
12. Petroleum Equipment Institute (P.E.I.) - Recommended Practice for Installation of Aboveground Storage Systems for Motor Vehicle Fueling
13. National Electric Code: NEC 501-Class I locations and NEC 514 - Gasoline Dispenser and Service Station
14. National Resource Conservation Commission
15. Texas Commission on Environmental Quality.

PART 2 - PRODUCTS

2.1 FUEL TANKS AND OVERFILL PROTECTION

A. Provide aboveground protected type vaulted fuel storage tanks. Tanks shall be factory-fabricated, have factory installed insulation and be factory tested. Tanks shall be shown to have passed safety requirements of UFC A-II-F1, including 2 hour fire resistance, hose stream testing, bullet resistance and impact resistance.

B. Fuel storage system shall be composed of two above ground, insulated tanks with secondary containment. Tanks shall be utilized for unleaded gasoline and diesel fuel but shall be capable of containing 10% concentration of methanol and 85% alcohol blended fuels. Materials of construction shall be suitable for products listed in paragraph 2.03 - Fuel System Instrumentation.

C. The insulated concrete vaulted tanks shall rest a minimum of 4" above the finished grade. The entire encased tank assembly shall be a Fireguard UL listed in accordance with UL Subject 2085. Tanks shall be provided with means to anchor to slab.

D. Tanks shall be equipped with a monitor port utilized for the detection of leaks from the primary to the secondary tank. The monitor port shall be a minimum of 2” schedule 40 steel and suitable for electronic monitoring.

E. Provide tank equipment listed below or engineer approved equal:

1. Provide primary and secondary emergency venting in accordance with NFPA 30. Provide permanent tag affixed to tanks listing required venting SCFH of the primary and secondary vaults.
2. Provide 2” updraft vent with vent cap terminating a minimum 12’ above grade to top of vent cap. When the updraft vent is covered by fuel island canopy the vent is required to extend a minimum of 24” above the top of the canopy and at least 24” above tank.
3. Tanks shall have future conversion capability suitable for future installation of Stage I & II vapor recovery systems.
4. Opening for submersible pump shall be 4” female threaded pipe suitable for design of pump.
5. Provide 2” male threaded nipple for OPW200TG wheel type clock gauge.
6. The aboveground storage tank system shall include a UL listed storage tank spill container OPW#6-211-R-30-2-B2-LD 12 gauge powder coated not less than 30 gallons with adjustable legs. Spill container shall have minimum of two booted 4” entry holes and a normally closed valve to release spilled product into an approved container. Provide a UL Listed shut-off valve in the top of the tank set at 95% fill capacity OPW#61FSTOP-1000 complete with OPW61FT drop tube for complete submerged filling. Provide tank inlet spout adapter with crossbar OPW#633AST-2061 and cam lock coupler OPW#633B-0150 with a 2” steel pipe flanged connection at valve in the vertical plane for shut off valve accessibility. Provide a means to stick tank with a top adapter and lockable cap. On unleaded tank only, provide two 4” male nipples for future Stage I and Stage II Vapor Recovery.
7. Tanks shall be warranted against leakage for period of 30 years from the date of installation. All pumps, dispensers, dispenser equipment, pipe valves and fittings

and tank appurtenances shall be warranted for Manufacturer defects for a period of 1 year from the date of installation.

8. Tank system shall be as listed below or approved equal.

F. Acceptable Manufacturers - Aboveground Storage Tanks:
   1. UL2085 - Fireguard

2.2 REMOTE DISPENSER UNITS

A. Acceptable Manufacturers:
   1. Gasboy
   2. Bennett
   3. Wayne

B. The Contractor will furnish new remote dispenser units in accordance with plans and install and calibrate these units per the following standards:
   1. Dispenser units shall be equipped with a heavy-gauge corrosion-resistant cabinet, removable panels, bolt construction, weather-lapped housing joints, rubber vibrator dampers and mechanical totalizers. Dispensers shall be capable of being field calibrated and shall be constructed for heavy duty usage.
   2. Dispenser units shall be equipped with a device that will register to 99.9 gallons and totalize to not less than 99,999.99 gallons. Totalizer shall be non-resettable. Dispensing system shall also include a pulsing device with capabilities to interface with a Fuel Control System (FCS).
   3. Dispenser units shall be equipped with a two (2), three (3) or four (4) piston meter for accuracy.
   4. The unit shall meet the current National Bureau of Standards Handbook No. 44, covering retail fuel type pumps, and shall be certifiable by the Weights and Measures Division of the Texas Department of Agriculture. If a two (2) product unit is requested, the unit must meet this requirement and all the other requirements stated in this entire specification for both product dispensing systems.
   5. The dispenser shall include an in-line, externally mounted, replaceable fuel filter with a drain valve.
   6. Gasoline dispenser units shall be capable of accepting future Stage II vapor recovery vacuum assist pumps.
   7. The dispenser will be equipped with a pipe coupling to allow disconnection and removal of the dispenser. The coupling shall be installed as close as possible to the shear valve (inside dispenser cabinet) so as to provide for a fully functioning shear valve and allow removal of the dispenser.
   8. The Contractor shall supply and install dispenser pedestals for above-ground piping and shear valve (Storage Solutions or an approved equal). The dispenser pedestal shall be 3/8 inch thick (minimum).
   9. Provide a pre-manufactured remote base by Bravo Systems B-8600 series with shear valve OPW#10 series.

2.3 PUMPS

A. Acceptable Manufacturers - Submerged Pumps:
   1. FE Petro

2. Red Jacket

B. The Contractor will furnish new pumps in accordance with plans and install and calibrate these units per the following standards:
   1. Submersible pumps shall be appropriate horse-power. The pump capacity shall not be less than 12 gallons per minute (gpm) at each nozzle, with each nozzle operating with one (1) foot of fuel remaining in the tank at any time of the year. A flow test shall be performed by a TCEQ certified testing firm furnished by the Contractor and witnessed by the Engineer.
   2. The bottom of the pumping unit shall be constructed and installed so as to allow removal and pumping of the maximum volume of fuel from the tank (i.e. the bottom of the pump shall be as close to the bottom of the tank as allowed and recommended by a pump Manufacturer).
   3. The bottom of the pumping unit shall be a minimum two (2) inch diameter.
   4. Provide a remote control unit equal to Red Jacket Model 880-041-5.

2.4 DISPENSER NOZZLES AND MISCELLANEOUS EQUIPMENT

A. Acceptable Manufacturers:
   1. OPW 11A Automatic Nozzle with OPWB Fillgard Splash Guard and OPW6 two (2) piece hand insulator
   2. Husky

B. The Contractor will furnish new nozzles, splash guards, hand insulators and hoses in accordance with the plans and specifications, and shall install and calibrate these units per the following standards:
   1. The completed dispenser system individual nozzle shall deliver product at a rate not less than specified above.
   2. The dispenser units shall be equipped with not less than 3/4 inch hydrocarbon-resistant synthetic rubber hose that is not less than 16 feet long. Each hose shall include a half swivel connector with straightening hose at the dispenser and a multi-swivel at the nozzle. Each hose shall be equipped with an individual hose retractor assembly capable of retrieving the hose length specified above. All adjustments and modifications will be performed by the Contractor to ensure that the hose retriever meets the Engineer's requirements. The Contractor shall install an approved emergency breakaway coupling on the dispensing hose.
   3. If a dual product/two (2) hose and/or single product/two (2) hosed unit is supplied, the Contractor shall be responsible for installing a second product line or establishing service so both hoses of the unit are capable of the 10 gpm delivery requirement when the hoses are operating concurrently.
   4. Splash guards and hand insulators shall be provided for each dispenser nozzle.
   5. Hose Retrievers. Hose retrievers (one (1) per hose) shall be Universal Hose Retriever Model 870 with Hosebun Model 100-1+B and hose cable assembly or an approved equal.
   6. Breakaway Hose Connectors. Breakaway hose connectors shall be OPW 66.
   7. Flexible Connectors. Flexible connectors shall be Flex-Ing.
   8. Fillpipe Adaptors with Lockable Top Seal Cap:
      a. Fillpipe adaptors shall be OPW 633T, EMCO Wheaton, Universal, EBW, Pemco. Caps shall be OPW 634TT, EMCO Wheaton, Universal, EBW, Pemco.

b. Fillpipe adaptors and caps shall be installed at all locations indicated on the plans.

c. The Contractor shall purchase and provide the following fuel connection attachments required during the fuel supply operations, and use for fuel transfer from the fuel truck into the aboveground storage tanks:
   1) two (2) OPW 633BD Kamlock Couplers or an approved equal
   2) two (2) OPW 190 Manual Nozzles or an approved equal

2.5 FUEL SYSTEM INSTRUMENTATION

A. Provide a complete tank level monitoring and leak detection/monitoring system. Coordinate voltage requirements with available 120V as show on the electrical drawings.

B. Automatic tank gauging system shall meet requirements of 40 CFR 280 including Subpart D, Release Detection and 30 TAC 334 including 334.50 Release Detection. The system shall be tested to comply with all applicable Federal Communications Commission requirements, be listed by Underwriters Laboratory, and comply with all other applicable national and local standards.

C. System shall include capability of monitoring up to four tanks and eight leak sensors. System shall be field programmable, completely automatic, have 50 year data retention, and Standard RS-232C and RS 485 communications interface modules and are capable of interfacing with Modem, Fax and Network Interface. The system shall be capable of operating without any additional hardware or software. The system will include printer, keypad, and liquid crystal display housed in a NEMA 12 rated panel. Output shall be in gallons. The system shall have 6 relays for sending alarm signals to the remote annunciator panel.

D. Inventory reports shall include inventory records, records of product deliveries, leak test reports, shift reports, and alarm reports, theft reports. Inventory reports shall give current tank status such as tank number, product, inches and gallons of product, inches and volume of water, and product temperature. Shift reports shall include the current tank status plus the net change in gallons that shift. Leak test reports shall include tank inventory at the beginning and ending of the test and pass/fail message. Delivery reports shall include beginning and ending inventories and net gallons delivered. Printer shall be automatic and on demand and shall be programmed to conduct leak tests at a minimum of once in a 35 day period.

E. System Supplier shall furnish console, probes, sensors, remote annunciator and wire from console to probes, sensors and remote annunciator.

F. Tank level monitoring system shall include a minimum of two probes. Probes shall be classified by Underwriters Laboratories and intrinsically safe for use in Class 1, Division 1, Group D hazardous locations. Probes may be magnetorestrictive. System shall have programmable alarm limits to activate on:
   1. High product level
   2. Low product level
   3. High water level
   4. Leaks
   5. Thefts
   6. High level

G. Console shall provide on-site remote audible alarms or horns shall be provided for Low Product, High Product, Water, Theft, and Leak Check. The Contractor shall be held responsible that each console is fully programmed for all alarms in accordance with the contract specifications. All alarm thresholds shall be user-programmable. Alarms shall be 100 decibels minimum, suitable for outdoor use and include manual reset.

H. Manufacturer shall provide one year warranty for parts and labor for console, probes, sensors and wire.

I. The entire system including probes shall be fully compatible with the products to be stored including gasohol (ten percent ethanol and 90 percent gasoline mixture), 09.5 percent gasoline, and 9.5 percent Oxinol-50* (4.75 percent methanol and 4.75 percent methanol and a minimum of 2.5 percent cosolvent - the blend may contain a maximum concentration of up to 3.7 weight percent oxygen in the final fuel); MTBE (methyl tertiary butyl ether) - gasoline with up to 20 percent, by volume of MTBE; or diesel fuel.

J. Furnish the Owner's representative with one Operation and Maintenance Instruction Manual for the automatic tank gauge before beginning any work at the site. Furnish original manuals, reproduced copies are not acceptable.

K. Manufacturer or their authorized representative shall perform start up programming, calibration and installation verification at site. The Contractor shall be liable for all programming. Controller shall include tank set up to account for tilt, material of construction, shape and product. Manufacturer shall conduct an Operations and Maintenance seminar. At the initial seminar, the Owner shall be provided with a detailed summary (in addition to the manual provided prior to work commencing at the site) of the steps required to program, calibrate and operate the equipment. In addition to the initial on-site seminar, the Contractor shall conduct another Operations and Maintenance seminar for the Owner.

L. The remote annunciator shall have a NEMA 7 enclosure rating and shall include one red alarm light for each tank. It shall include a common audible alarm with a test and reset button. The audible alarm shall be silenced up pressing the Reset Button but the visual alarm shall not clear until the alarm condition has been corrected. It shall be an LC 1003 as manufactured by Pneumercator or approved equal.

M. The level probe shall be of the magnetostrictive type capable of reporting both gross and net product levels and water level. It shall require a shielded, twisted pair cable for connection to the console. It shall be a MP 450S-xxx-25 as manufactured by Pneumercator or approved equal.

N. The leak sensor shall be of the float switch type requiring a two wire connection. It shall be a LS 600 LDBN for diesel and gasoline and LS 600 LDSS for "alternative" fuels as manufactured by Pneumercator or approved equal

O. System shall be a Tank Management System with EPA-Compliant with in-tank leak detection capable TMS 3000 SERIES (4 tanks) as manufactured by Pneumercator or approved equal.

2.6 PIPE AND PIPE FITTINGS

A. Steel Pipe and Fittings:
   1. Above ground pipe shall be Schedule 40 ASTM A120. Fittings and couplings shall be extra heavy malleable iron screw-type. Unions shall be 250/300# with integral seats. Galvanized pipe and fittings shall be used for gasoline fuel pipe. Black pipe and fittings shall be used for diesel fuel pipe. Vent pipe shall be galvanized steel pipe. Each tank shall be vented individually.

B. Flexible Connectors:
   1. Flexible connectors shall be UL listed stainless steel braided as supplied by Titflex or other approved Manufacturer. Flexible connectors shall use convoluted Teflon inner core rated for all grades of fuel including diesel and ethanol or methanol blends of gasoline. Flexible connection shall include a warranty for a minimum period of 20 years against corrosion. Flexible connectors shall be enclosed in an isolation jacket having equal pressure rating of five to seven psi. Install in accordance with Manufacturer's instructions, do not install at radius less than approved by Manufacturer. All external components of the isolation jacket shall be to non-corrodible. Isolation jacket to be Flex-ing, or equal by approved Manufacturer.

C. Gaskets:
   1. Gaskets shall be suitable for gasoline, diesel, gasoline/methane. Gaskets to be Style 780 plant Fibre sheet by American Packing and Gasket Company or equal approved Manufacturer.

2.7 VALVES

A. Gate Valves: Three inch and smaller valves used in fuel lines shall have threaded ends and be installed at all locations as required for a fully functional system. Valves components shall be rated for gasoline, diesel and gasoline/methanol. Packing shall be non-asbestos graphite/aramid fiber. Valves shall be Grinnell Figure no. 3010 or equal as supplied by approved Manufacturers.

B. Shear and Check Valves; Check valves at dispensers for aboveground tanks shall be Tokheim model 52 or equal with shear section and shear bar.

C. Solenoid Valves: Shall be Morrison 710 series or equal by approved Manufacturer.

D. Pressure Relief Valves; Shall be Red Jacket model 123-032-5 or equal by approved Manufacturer.

E. Overfill Protection: Overfill protection for aboveground tanks shall meet state and federal Codes.

2.8 SIGNS

A. Supply and install eight signs at locations selected by Owner. Four of the signs shall be installed on the sides of the tanks. Signs shall be conspicuous and legible signs reading "No Smoking - Stop Engines" in letters not less than two inches in height and 3/8 inch stroke.

B. Supply and install four signs at locations selected by Owner. Signs shall be conspicuous and legible reading "EMERGENCY SHUT-OFF" in letters not less than two inches in height and 3/8 inch stroke.

C. Supply and install four signs indicating service and contents (i.e. Diesel, Unleaded) of both the dispenser units and tanks.

PART 3 - EXECUTION

3.1 INSTALLATION

A. Install in accordance with Manufacturer's recommendations.

B. Dispensers and pumps shall be installed at locations as shown on the drawings. Contractor shall install dispensers as required and furnish all appurtenances including pressure regulating valves, flexible connectors for a fully operational system. Contractor shall furnish and install all new electrical components including but not limited to conductors, conduit, flexible conduit, fittings, unions, junction boxes, wireways, seal fittings/seal-offs, emergency stops, etc. between the dispensers and a wireway located at the building.

C. EPO-switch shall be an shall be clearly identified and easily accessible and be installed in a remote location more than 20 feet but less than 100 feet from the dispenser units and also in line of sight of the dispenser units. The emergency stop button shall be a manufactured emergency stop control station complete kit with a clear cover and emergency stop signage within enclosure by Power Integrity #IA-ESOC.

D. On-site remote audible alarm or horn with reset shall be located near tanks as directed by Owner. Alarm shall be activated on high level in tanks and other criteria such as theft, low product, etc., the alarm annunciator with a alarm light indicating which tank is in the alarm mode.

3.2 PIPING, VALVES AND FITTINGS

A. Materials and Design: Piping, valves, fittings, and related components shall be designed and fabricated from suitable materials, having adequate strength and durability to withstand the operating pressures, structural stress, and exposures to which they may be subjected. Specific requirements are that materials must:
   1. Be compatible with products stored.
   2. Not be damaged by normal operating or test pressures.
   3. Have sufficient integral strength to withstand stress during construction and subsequent operations.
   4. Not deteriorate while exposed to outdoor conditions.

B. Piping Layout: Traps (sumps) in the lines shall be avoided.

C. Piping Requirements: Piping materials shall be compatible with products stores. Piping shall be installed so as to facilitate testing, resist corrosion, and prevent damage from movement of system components.

1. Inspect all materials for signs of damage and confirm compliance with specifications.
2. Provide adequate clearance between piping and conduit, nearby structures, and other system components.
3. Keep pipe, as well as fitting interiors and threads, free from dirt, corrosion, moisture, and debris.
4. Exercise care to accurately measure and cut pipe, so as to avoid the failure that can occur when pipe fittings are installed under stress.
5. Use pipe sealant (dope or cement) compatible with the piping materials and the product being handled. Wrap ribbon dope with the threads to avoid bunching during tightening. Follow the Manufacturer's preparation and application instructions, giving proper attention to temperature and moisture condition limitations.
6. Install equipment, check valves, valves, flexible connectors, gauges, monitoring systems, and other system components in accordance with Manufacturer's recommendations.
7. Isolate dissimilar materials using sleeves, dielectric unions, etc., to prevent electrolysis.

D. Piping Workmanship:
1. Inspect pipe-cutting dies frequently and replace when worn.
2. Ream and de-burr pipe ends after cutting.
3. Flexible connectors shall be used at the beginning and end of each product line and, if required to relieve stress, where lines change direction.

3.3 TESTING AND TRAINING

A. System Tests: Tank and piping, as well as the satisfactory operation of monitoring systems shall be proven before the system is placed in operation.

B. The following Tank and Component Tests are required to ensure the integrity of the system:
1. Before placing components in the excavation: 5 psig air test.
2. After pipe assembly but before connection to the tank or dispensers: 50 psig air test or 100% hydrostatic test.
3. Before placing the system in service:
   a. Internal and External Monitoring and Gauging Systems: Manufacturer's recommendations
   b. Tank System: Precision test. (NFPA 329)

C. "As-Built" Drawings: "As-Built drawings of piping, monitoring, and other system components shall be provided by this Installer to the Owner. The documents may take the form of a marked-up set of installation drawings showing the location of piping, conduit, and other significant system components.

D. Component Documentation: Provide the owner with installation and operating instructions for all components of the tank system, recommended test procedures, preventive maintenance schedules, and tank charts that indicate gallons for various depths.

3.4 SAFETY PRECAUTIONS

A. The Contractor shall store or handle gasoline or other flammable liquids in strict accordance with all state fire Marshall Requirements.

B. The Contractor shall have two Class 20 B:C fire extinguishers readily available for any work which involves release of product or use of a sparking device.

C. As a minimum, the Contractor shall take the following precautions:
   1. Eliminate all potential sources of ignition from the area including smoking materials, and nonexplosion proof electrical and internal combustion equipment.
   2. Prevent the generation and discharge of static electricity during venting of flammable vapors.
   3. Prevent the accumulation of vapors at ground level and other key locations.

D. A combustible gas indicator shall be used to check for explosive vapor concentrations. All open flame and spark-producing equipment within the vapor hazard area shall be shut down. Electrical equipment (for example, pumps and portable hand tools) used in the area shall be explosion-proof in accordance with NFPA 70B Class I, Division I, Group D or otherwise approved for use in potentially explosive atmospheres.

E. The Contractor shall clean up all fuel and oil spills related to his operations immediately. Sorbent pads or sweeping compound shall be used for diesel spills. Sorbent pads shall be used for gasoline. Spills shall not be washed into yard drains, sidewalks, streets, etc.

F. The Contractor shall use a pan or pail to drain all product from the equipment. The Contractor shall not allow product to soak into the ground. In the event of a spill or leak the Contractor shall immediately (within 4 hours) notify the TxDOT Representative. In addition, within 24 hours of the spill submit typed documentation summarizing the incident to the TxDOT Representative.

G. In case of fire, the Contractor shall immediately notify the TxDOT personnel and the following general procedures consistent with NFPA shall be used (the Contractor shall evaluate the specific situation before acting):
   1. Contact the Fire Department.
   2. Shut off flow of product that may be entering the area.
   3. Attempt to extinguish fire or keep it from spreading to adjacent areas. If the fire is out of control, clear the area to avoid risk of injury.
   4. Use a dry chemical fire extinguisher (B:C type).

H. The Contractor shall maintain written documentation of compliance with all of the above requirements.

3.5 CALIBRATION AND DISPENSERS

A. All dispensers shall be checked for calibration by the Contractor after work has been completed but prior to acceptance of the work by the Owner. Any adjustments, modifications, repairs, etc., (i.e. the replacement of meters, pump impellers, etc.) Required to the dispenser or fuel system to achieve the required flow plus six cubic inches per five gallons shall be done at no additional cost to the Owner. Include results

of calibration tests and a copy of the certificate of registration for the service person that performed the calibration and adjustments in the Operations and Maintenance Manuals.

3.6 SYSTEM DEMONSTRATION

A. Contractor shall demonstrate to Owner and/or Owner's Representative all functions and alarms.

3.7 WARRANTY

A. Tank Manufacturer shall furnish a 30-year warranty to the Owner. Warranty shall be against defects in material and workmanship and shall include repair or replacement at no cost to the Owner.

END OF SECTION

SECTION 12493

HORIZONTAL LOUVER BLINDS

PART 1 - GENERAL

1.1 SUMMARY

A. Section includes horizontal metal slat louver blinds and operating hardware.

B. Related Sections:
1. Section 06114 - Wood Blocking and Curbing: Blocking for attachment of headrail brackets.

1.2 SUBMITTALS

A. Section 01330 - Submittal Procedures: Submittal requirements.

B. Shop Drawings: Indicate opening sizes, tolerances required, method of attachment, clearances, and operation.

C. Product Data: Submit data indicating physical and dimensional characteristics, operating features, and full range of Manufacturers for initial color selection.

D. Samples: Submit one sample, long illustrating slat materials and finish, color, wand type and color.

E. Manufacturer's Installation Instructions: Submit special procedures and perimeter conditions requiring special attention.

1.3 QUALITY ASSURANCE

A. Source Limitations: Obtain horizontal louver blinds through one source from a single Manufacturer.

B. Fire-Test-Response Characteristics: Provide horizontal louver blinds with the fire-test-response characteristics indicated, as determined by testing identical products per test method indicated below by UL or another testing and inspecting agency acceptable to authorities having jurisdiction. Identify materials with appropriate markings of applicable testing and inspecting agency.
1. Flame-Resistance Ratings: Passes NFPA 701.

C. Product Standard: Provide horizontal louver blinds complying with WCSC A 100.1.

D. Manufacturer: Company specializing in manufacturing products specified in this section with minimum three years documented experience.

1.4 MOCKUP

A. Section 01400 - Quality Requirements: Mockup requirements.

B. Construct mockup of one full size window.

C. Locate where directed by Architect/Engineer.

D. Incorporate accepted mockup as part of Work.

1.5 FIELD MEASUREMENTS

A. Verify field measurements prior to fabrication.

1.6 COORDINATION

A. Section 01300 - Administrative Requirements: Coordination and project conditions.

B. Coordinate the Work with window installation and placement of concealed blocking to support blinds.

1.7 EXTRA MATERIALS

A. Section 01700 - Execution Requirements: Spare parts and maintenance products.

B. Supply ten additional slats.

C. Supply two additional complete blind assemblies.

D. Supply 3 extra lift cords and control wands.

PART 2 - PRODUCTS

2.1 HORIZONTAL LOUVER BLINDS

A. Manufacturers:
1. Bali Window Treatments
2. Hunter Douglas Window Fashions
3. Levolor Contract
4. Substitutions: Section 01600 - Product Requirements

2.2 COMPONENTS

A. Blinds: Horizontal slat louvers hung from full-width headrail with full-width bottom rail; manual control of raising and lowering by cord with full range locking; blade angle adjustable by control wand.

B. Metal Slats: Spring tempered pre-finished aluminum; square slat corners, with manufacturing burrs removed:
   1. Width: 1 inch
   2. Thickness: 0.011 inch
   3. Color: As selected from Manufacturers full range

C. Slat Support: Woven polypropylene cord, ladder configuration.

D. Headrail: Pre-finished, formed aluminum box, with end caps; internally fitted with hardware, pulleys, and bearings for operation; same depth as width of slats.
   1. Color: As selected from Manufacturers full range.

E. Bottom Rail: Pre-finished, formed aluminum with top side shaped to match slat curvature; with end caps.
   1. Color: Same as Headrail.

F. Lift Cord: Braided nylon; continuous loop.
   1. Free end weighted
   2. Color: As selected from Manufacturers full range.

G. Control Wand: Extruded solid plastic; round shape.
   1. Removable type.
   2. Length of window opening height
   3. Color: As selected from Manufacturers full range.

H. Headrail Attachment Mounting: Ceiling mounting to head in window openings, permitting easy removal and replacement without damaging blind or adjacent surfaces and finishes; with spacers and shims required for blind placement and alignment indicated.
   1. Provide intermediate support brackets if end support spacing exceeds spacing recommended by Manufacturer for weight and size of blind.

I. Accessory Hardware: Type recommended by blind Manufacturer.

J. Colors, Textures, Patterns, and Gloss: As selected by Architect from Manufacturer's full range.

2.3 FABRICATION

A. Fabricate blinds to fit within openings with uniform edge clearance of ½ inch.

B. Concealed Components: Noncorrodible or corrosion-resistant-coated materials.
   1. Lift-and-Tilt Mechanisms: With permanently lubricated moving parts.

C. Unit Sizes: Obtain units fabricated in sizes to fill window and other openings as follows, measured at 74 deg F:
   1. Blind Units Installed between (inside) Jambs: Width equal to 1/4 inch per side or 1/2 inch total, plus or minus 1/8 inch, less than jamb-to-jamb dimension of opening in which each blind is installed. Length equal to 1/4 inch, plus or minus

1/8 inch, less than head-to-sill dimension of opening in which each blind is installed.

D. Installation Brackets: Designed for easy removal and reinstallation of blind, for supporting headrail, valance, and operating hardware, and for hardware position and blind mounting method indicated.

E. Installation Fasteners: No fewer than two fasteners per bracket, fabricated from metal noncorrosive to blind hardware and adjoining construction; type designed for securing to supporting substrate; and supporting blinds and accessories under conditions of normal use.

F. Color-Coated Finish:
1. Metal: For components exposed to view, apply Manufacturer's standard baked finish complying with Manufacturer's written instructions for surface preparation including pretreatment, application, baking, and minimum dry film thickness.

G. Component Color: Provide rails, cords, ladders, and exposed-to-view metal and plastic matching or coordinating with slat color, unless otherwise indicated.

PART 3 - EXECUTION

3.1 EXAMINATION

A. Section 01300 - Administrative Requirements: Coordination and project conditions.

B. Verify openings are ready to receive work.

C. Verify structural blocking and supports are correctly placed.

3.2 INSTALLATION

A. Provide blind at each window.

B. Install blinds. Install horizontal louver blinds level and plumb and aligned with adjacent units according to Manufacturer's written instructions, and located so exterior slat edges in any position are not closer than 1 inch to interior face of glass. Install intermediate support as required to prevent deflection in headrail. Allow clearances between adjacent blinds and for operating glazed opening's operation hardware if any.

C. Head Mounted: Install headrail to inside of head of window opening.

D. Secure in place with flush countersunk fasteners.

E. Place intermediate head supports at Manufacturers recommendation.

3.3 ERECTION TOLERANCES

A. Section 01400 - Quality Requirements: Tolerances.

B. Maximum Variation of Gap at Window Opening Perimeter: 1/4 inch.

C. Maximum Offset From Level: 1/8 inch.

3.4 ADJUSTING

A. Section 01700 - Execution Requirements: Testing, adjusting, and balancing.

B. Adjust blinds for smooth operation.

3.5 CLEANING

A. Section 01700 - Execution Requirements: Final cleaning.

B. Clean blind surfaces just prior to occupancy. Clean horizontal louver blind surfaces after installation, according to Manufacturer's written instructions.

C. Provide final protection and maintain conditions, in a manner acceptable to Manufacturer and Installer that ensure that horizontal louver blinds are without damage or deterioration at time of Substantial Completion.

D. Replace damaged horizontal louver blinds that cannot be repaired, in a manner approved by Architect, before time of Substantial Completion.

END OF SECTION

SECTION 13120

PRE-ENGINEERED BUILDINGS

PART 1 - GENERAL

1.1 SCOPE: The extent of Pre-engineered Buildings is shown on the drawings, including:

A. Pre-engineered, shop fabricated structural steel building frame.

B. Metal wall and sloped roof systems including linear panels, flashing soffits, gutters and downspouts, canopies. Rakes, ridge cap, doors, insulation and accessories...

C. Primary and Secondary framing system.

1.2 RELATED WORK SPECIFIED ELSEWHERE

A.	Cast-in-Place Concrete	Section 03300
B.	Doors and Windows (if applicable)	Sections 08100, 8330, 08710
C.	Sheet Metal Roof Panels	Section 07613
D.	Mechanical Systems	Division 15
E.	Electrical Systems	Division 16

1.3 SYSTEM DESCRIPTION

A. Rigid frame with straight columns and roof beams and gable roof.

B. Bay Spacing: Dimension between main frames measured normal to frame (at centerline of frame) for interior bays, and dimension from centerline of first interior main frame measured normal to end wall (outside face of end-wall girt) for end bays per plans.

C. Primary Framing: Rigid frame of rafter beams and columns, canopy beams, intermediate columns, end wall columns, and wind bracing.

D. Secondary Framing: Purlins, girts, eave struts, sill supports, clips and other items detailed.

E. Wall System: Preformed metal panels of vertical profile, with sub-girt framing/anchorage assembly, and accessory components.

F. Roof System: Preformed metal panels of upslope standing seam profile, with sub-girt framing/anchorage assembly, insulation and accessory components.

G. Roof Slope: per plans

H. Anchor bolts as specified by the building Manufacturer.

1.4 DESIGN REQUIREMENTS

A. Building construction shall meet the specific performance criteria specified herein and in the drawings.

B. Design members to withstand dead load, applicable snow load, and design loads due to pressure and suction of wind calculated in accordance with International Building Code (IBC), 2003, design load schedule and loads imposed by industrial equipment and mechanical, electrical systems.

C. Structural Framing: Design primary and secondary structural members and exterior covering materials for applicable load combinations in accordance with the Metal Building Manufacturer's Association's (MBMA) "Design Practices Manual". Primary structural frames shall be designed as pinned - based frames. Lateral drift of primary frames shall be limited to the eave height (in inches) / 240.

D. Structural Steel: For the design of structural steel members, comply with the requirements of the American Institute of Steel Construction (AISC) "Specifications for the Design, Fabrication and Erection of Structural Steel for Buildings" for design requirements and allowable stresses. Total load deflections shall be limited to L/240.

E. Light Gage Steel: For the design of light gage steel members, comply with the requirements of the American Iron and Steel Institute's (AISI) "Specification for the Design of Cold Formed steel Structural Members" and "Design of Light Gage Steel Diaphragms" for design requirements and allowable stresses. Total load deflections shall be limited to L/240.

F. For welded connections, comply with the American Welding Society's (AWS) "Standard Code for Arc and Gas Welding in Building Construction" for welding procedures.

G. Tolerances: Fabrication shall conform to the fabrication tolerances published in the MBMA "Common Industry Practices".

H. Design Loads: Basic design loads, as well as collateral loads, are as specified.
1. Basic design loads include, in addition to dead load, live load and wind load.
2. Collateral loads include additional dead loads over and above the weight of the metal building system such as mechanical and electrical systems.
3. Design each member to withstand stresses resulting from combinations of loads that produce the maximum allowable stresses in that member as prescribed in MBMA's "Design Practices Manual" Section 9 of Design Practices.

I. Design members to withstand UL 580 - Uplift Resistance, Uplift Class 90 as tested by the Building Manufacturer, or wind load per IBC, whichever is more stringent.

J. Exterior wall and roof system shall withstand imposed loads with maximum allowable deflection of span: L/240.

K. Provide drainage to exterior for water entering or condensation occurring within wall or roof system.

L. Permit movement of components without buckling, failure of joint seals, undue stress on fasteners or other detrimental effects, when subject to temperature range of 150 Degrees F (65.6 Degrees C).

M. Thermal Performance:
1. Thermal Resistance of Calculated Wall System: R Value of 19 at conditioned space
2. Thermal Resistance of Calculated Wall System: R Value of 10 at semi-heated space
3. Thermal Resistance of Calculated Roof System: R Value of 30 at conditioned space
4. Thermal Resistance of Calculated Roof System: R Value of 10 at semi-heated space

1.5 SUBMITTALS FOR REVIEW

A. Submittals: Procedures for submittals Section 01300

B. Product Data: Provide data on profiles, component dimensions, fasteners and structural properties. Test results from certified lab on each panel system... Performance test results for wind uplift resistance per UL 580, clip to panel strength per ASTM E 1592-95, air infiltration per ASTM E 283-84.

C. Shop Drawings: Indicate assembly dimensions, locations of structural members, connections, attachments, openings, cambers, loads, and all associated items; wall and roof system dimensions, wall and roof panel layout, general construction details, anchorages and method of anchorage, method or installation; framing anchor bolt settings, sizes, and locations from datum and foundations loads; indicate welded connections with AWS A2.0 welding symbols; indicate net weld length; all design loads. Provide drawings and calculations sealed and signed by a professional engineer licensed to practice in the State of Texas.

D. Samples for Initial Selection: For each type of building component with factory-applied color finish

E. Samples for Verification: For each type of exposed finish required, prepared on Samples of sizes indicated below, in size illustrating color and texture of finish; fasteners, sealants and closers.
1. Metal Roof and Wall Panels: Nominal 12 inches long by actual panel width. Include fasteners, closures, and other exposed panel accessories.
2. Flashing and Trim: Nominal 12 inches long. Include fasteners and other exposed accessories.
3. Vapor Retarders: Nominal 6-inch- square Samples.
4. Accessories: Nominal 12-inch- long Samples for each type of accessory

F. Metal Panel System Fabrication Certification: Submit a letter from the metal building Manufacturer certifying that the wall and roof panels have been produced in a factory environment (not job site roll formed) with fixed-base roll forming equipment.

G. Product Certificates: For each type of metal building system, signed by product Manufacturer.
   1. Letter of Design Certification: Signed and sealed by a qualified professional engineer. Include the following:
      a. Name and location of Project
      b. Order number
      c. Name of Manufacturer
      d. Name of Contractor
      e. Building dimensions including width, length, height, and roof slope
      f. Indicate compliance with AISC standards for hot-rolled steel and AISI standards for cold-rolled steel, including edition dates of each standard.
      g. Governing building code and year of edition
      h. Design Loads: Include dead load, roof live load, collateral loads, roof snow load, deflection, wind loads/speeds and exposure, seismic design category or effective peak velocity-related acceleration/peak acceleration, and auxiliary loads (cranes).
      i. Load Combinations: Indicate that loads were applied acting simultaneously with concentrated loads, according to governing building code.
      j. Building-Use Category: Indicate category of building use and its effect on load importance factors.

H. Welding certificates.

I. Erector Certificate: Signed by Manufacturer certifying that erector complies with requirements.

J. Manufacturer Certificate: Signed by Manufacturer certifying that products comply with requirements.

K. Qualification Data: For Erector and Manufacturer.

L. Material Test Reports: Signed by Manufacturers certifying that the following products comply with requirements:
   1. Structural steel including chemical and physical properties
   2. Bolts, nuts, and washers including mechanical properties and chemical analysis
   3. Tension-control, high-strength, bolt-nut-washer assemblies
   4. Shop primers
   5. Non-shrink grout

M. Surveys: Have registered surveyor confirm location of anchor bolts prior to placement of concrete.

N. Warranties: Special warranties specified in this Section.

1.6 SUBMITTALS FOR INFORMATION

A. Submittals: Procedures for submittals Section 01300.

B. Manufacturer's Instructions: Indicate preparation requirements, anchor bolt placement, structural loads on base plate anchors, and accessories.

C. Erection Drawings: Indicate members by label, assembly sequence, and temporary erection bracing.

1.7 SUBMITTALS FOR CLOSEOUT

A. Project Record Documents: Record actual locations of concealed components and utilities. Record any changes to Construction Documents during construction and provide original As-Built set to TxDOT Representative at end of project. Contractor is required to maintain As-Built set on site and when changes occur. Progress Payments will be based on maintaining current As-Built set on a monthly basis and will be checked by the TxDOT Representative.

B. Upon completion of erection submit written Certification prepared and signed by the design Professional Engineer, qualified herein, attesting to his/her field verification of the erection being in accordance with his/her shop drawings.

1.8 QUALITY ASSURANCE

A. Perform Work in accordance with AISC - Quality Certification Program Category MB. MBMA - Metal Building Systems Manual and MBMA - Low Rise Building Systems Manual. Maintain one copy on site.

B. Manufacturer Qualifications: Company specializing in manufacturing the Products specified in this section with minimum five years documented experience.

C. Erector Qualifications: Company specializing in performing the work of this Section with minimum of five years documented experience and approved by Manufacturer. Project Foreman must have specific training in proper installation of specified wall and roof systems with certification. Submit five references from five different architects or owners for systems that have been installed for at least two years and stating that the performance has been satisfactory.

D. Design structural components, develop shop drawings, and perform shop and site work under direct supervision of a Professional Structural Engineer Experienced in design of this work and licensed in the State of Texas.

E. Source Limitations: Obtain primary metal building system components, including structural framing and metal panel assemblies, through one source from a single Manufacturer.

F. Product Options: Drawings indicate size, profiles, and dimensional requirements of metal building system and are based on the specific system indicated. Refer to Division 1 Section "Product Requirements."

1. Do not modify intended aesthetic effects, as judged solely by Architect, except with Architect's approval. If modifications are proposed, submit comprehensive explanatory data to Architect for review.

G. Retain "Welding certificates" Paragraph in "Submittals" Article with first paragraph below. AWS states that welding qualifications remain in effect indefinitely unless welding personnel have not welded for more than six months or there is a specific reason to question their ability.

H. Welding: Qualify procedures and personnel according to AWS D1.1, "Structural Welding Code-Steel," and AWS D1.3, "Structural Welding Code-Sheet Steel."

I. Surface-Burning Characteristics: Provide field-insulated metal panels having thermal insulation and vapor-retarder-facing materials with the following surface-burning characteristics as determined by testing identical products per ASTM E 84 by UL or another testing and inspecting agency acceptable to authorities having jurisdiction:

1. Flame-Spread Index: 25 or less, unless otherwise indicated
2. Smoke-Developed Index: 450 or less, unless otherwise indicated

J. A Pre-Erection Conference: Conduct conference at Project site to comply with requirements in Division 1 Section "Project Management and Coordination." Review methods and procedures related to metal building systems including, but not limited to, the following:

1. Inspect and discuss condition of foundations and other preparatory work performed by other trades.
2. Review structural load limitations.
3. Review and finalize construction schedule and verify availability of materials, Erector's personnel, equipment, and facilities needed to make progress and avoid delays.
4. Review required testing, inspecting, and certifying procedures.
5. Review weather and forecasted weather conditions and procedures for unfavorable conditions.

K. Pre-installation Roof Assembly Conference: Conduct conference at Project site to comply with requirements in Division 1 Section "Project Management and Coordination." Review methods and procedures related to metal roof panel assemblies including, but not limited to, the following:

1. Examine purlin and rafter conditions for compliance with requirements, including flatness and attachment to structural members.
2. Review structural limitations of purlins and rafters during and after roofing.
3. Review flashings, special roof details, roof drainage, roof penetrations, equipment curbs, and condition of other construction that will affect metal roof panels.
4. Review temporary protection requirements for metal roof panel assembly during and after installation.
5. Review roof observation and repair procedures after metal roof panel installation.

1.9 DELIVERY, STORAGE AND HANDLING

A. Delivery and receipt of materials shall be in accordance with the MBMA "Common Industry Practices".

B. Deliver and store prefabricated components, sheets, panels and other manufactured items so they will not be damaged or deformed.

C. Stack materials on platforms or pallets, covered with tarpaulins or other suitable weather tight ventilated covering. Cover metal sheets or panels so that water accumulations will drain freely. Do not store sheets or panels in contact with other materials that might cause staining. Elevate one of stored metal sheets and panels so as to positively drain water and prevent "white" rust.

1.10 REGULATORY REQUIREMENTS

A. Conform to IBC, 2003 code for submission of design calculations, reviewed shop and erection drawings, and as required for acquiring permit.

B. Cooperate with regulatory agency or authority and provide data as required.

1.11 PRE-INSTALLATION MEETING

A. Section 01300 - Administrative Requirements: Pre-installation meeting.

B. Convene two weeks before starting work of this section.

1.12 WARRANTY

A. Provide a 20 (twenty) year No Dollar Limit warranty to include coverage for exterior pre-finished surfaces to cover pre-finished color coat against chipping, cracking or crazing, blistering, peeling, chalking or fading.

B. Provide a 20 (twenty) year warranty covering bare metal against rupture, structural failure and perforation due to normal atmospheric corrosion exposure.

C. Provide 20 (twenty) year No Dollar Limit coverage for weather tightness of building enclosure elements after installation.

PART 2 - PRODUCTS

2.1 MANUFACTURERS - BUILDING SYSTEM

A. Manufacturers:
1. Alliance Steel, Inc.
2. Butler Manufacturing Company
3. Ceco Building Systems; Division of Robertson-Ceco Corporation

4. Mesco Metal Buildings; Division of NCI Building Systems, LLP
5. Metallic Metal Building Company; Division of NCI Building Systems, LLP
6. Star Building Systems; Division of Robertson-Ceco Corporation
7. Other acceptable Manufacturers offering equivalent products must be submitted as a substitution to be considered for approval.

2.2 MATERIALS – FRAMING

A. W-Shapes: ASTM A 992/A 992M; ASTM A 572/A 572M, Grade 50 or 55.

B. Structural Tubing: ASTM A500, Grade B.

C. Channels, Angles, M-Shapes, and S-Shapes: ASTM A 36/A 36M; ASTM A 572/A 572M, Grade 50 or 55.

D. Plate and Bar: ASTM A 36/A 36M; ASTM A 572/A 572M, Grade 50 or 55; or ASTM A 529/A 529M, Grade 50 or 55.

E. Steel Pipe: ASTM A 53/A 53M, Type E or S, Grade B.

F. Cold-Formed Hollow Structural Sections: ASTM A 500, Grade B or C, structural tubing.

G. Structural-Steel Sheet: Hot-rolled, ASTM A 1011/A 1011M, Structural Steel (SS), Grades 30 through 55, or High-Strength Low Alloy Steel (HSLAS), Grades 45 through 70; or cold-rolled, ASTM A 1008/A 1008M, Structural Steel (SS), Grades 25 through 80, or High-Strength Low Alloy Steel (HSLAS), Grades 45 through 70.

H. Metallic-Coated Steel Sheet: ASTM A 653/A 653M, Structural Steel (SS), Grades 33 through 80 or High-Strength Low Alloy Steel (HSLAS), Grades 50 through 80; with G60 coating designation; mill phosphatized.

I. Metallic-Coated Steel Sheet Prepainted with Coil Coating: Steel sheet metallic coated by the hot-dip process and prepainted by the coil-coating process to comply with ASTM A 755/A 755M.
   1. Zinc-Coated (Galvanized) Steel Sheet: ASTM A 653/A 653M, Structural Steel (SS), Grades 33 through 80 (230 through 550) or High-Strength Low Alloy Steel (HSLAS), Grades 50 through 80 (340 through 550); with G90 (Z275) coating designation.
   2. Aluminum-Zinc Alloy-Coated Steel Sheet: ASTM A 792/A 792M, Structural Steel (SS), Grade 50 or 80; with Class AZ50 coating.

J. Non-High-Strength Bolts, Nuts, and Washers: ASTM A 307, Grade A, carbon-steel, hex-head bolts; ASTM A 563 carbon-steel hex nuts; and ASTM F 844 plain (flat) steel washers.
   1. Finish: Plain

K. High-Strength Bolts, Nuts, and Washers: ASTM A 325, Type 1, heavy hex steel structural bolts; ASTM A 563 heavy hex carbon-steel nuts; and ASTM F 436 hardened carbon-steel washers.
   1. Finish: Plain

L. Tension-Control, High-Strength Bolt-Nut-Washer Assemblies: ASTM F 1852, Type 1, heavy-hex-head steel structural bolts with splined ends.
   1. Finish: Plain

M. Unheaded Anchor Rods: ASTM A 36/A 36M.
   1. Configuration: Straight
   2. Nuts: ASTM A 563 heavy hex carbon steel
   3. Plate Washers: ASTM A 36/A 36M carbon steel
   4. Washers: ASTM F 436 hardened carbon steel
   5. Finish: Plain
   6. Nuts: ASTM A 563 heavy hex carbon steel
   7. Plate Washers: ASTM A 36/A 36M carbon steel
   8. Washers: ASTM F 436 hardened carbon steel
   9. Finish: Plain

N. Threaded Rods: ASTM A 36/A 36M.
   1. Nuts: ASTM A 563 heavy hex carbon steel
   2. Washers: ASTM A 36/A 36M carbon steel
   3. Finish: Plain

O. Cold Forming Members: ASTM 607 Grade 50 Zinc Coated Steel STM 446-G90.

P. Welding Materials: AWS D1.1; type required for materials being welded.

Q. Primer: SSPC 20, Red oxide.

R. Grout: ASTM C1107, Non-shrink type, premixed compound consisting of non-metallic aggregate, cement, water reducing and plasticizing agents, capable of developing minimum compressive strength of 2400 psi (17 MPa) in two days and 7000 psi (48 MPa) in 28 days.

2.3 DESIGN LOADS

A. Roof Live Loads (Applies to the horizontal projection):
   1. 20 PSF: 0-200 SF tributary area
   2. 16 PSF: 200-600 SF tributary area
   3. 12 PSF: Over 600 SF tributary area

B. Roof Covering: 50 Psf or a 200 pound concentrated load located at center of maximum roof panel span.

C. Auxiliary Loads:
   1. Concentrated Loads: See mechanical and electrical, carefully coordinate and accommodate all items.

2. Provide support beams in addition to the roof purlins to support loads greater than 500 pounds.
3. Reference Structural, Mechanical, and Architectural documents for additional concentrated loads. Coordinate and accommodate additional loads imposed on structural by attached items.

2.4 DESIGN OF PRIMARY FRAMING

A. In the design of primary framing members, wind pressures shall be calculated in accordance with IBC, Wind Speed requirements Primary frames shall be designed with pinned bases.

2.5 BASIC DESIGN WIND PRESSURE (Wall Components, girts and wall panels):

A. Wind Speed: per IBC wind load requirements and per code for the project location, Texas.

B. Wind pressures on parts and portions shall be calculated in accordance with the MBMA "Design and practices Manual".

2.6 DESIGN LOAD COMBINATIONS

A. Dead/Live/Wind: Loading combinations of dead load, live load and wind loads shall be in accordance with MBMA recommendations, Section 9 of Design Practices.

2.7 MATERIALS - WALL LINER AND ROOF SYSTEM

A. Sheet Metal Roof as specified in section 07413.

B. Insulation: In accordance with design requirement section.

C. Restrain insulation with galvanized poultry net at roof.

D. Joint Seal Gaskets: Manufacturer's standard EPDM type.

2.8 METAL DOORS AND FRAMES

A. Doors: Specified in Section 08110.

B. Frames: Specified in Section 08115.

2.9 COILING DOORS

A. Overhead Coiling Doors: Specified in Section 08333.
1. Overhead Door Frame: Formed steel sections braced to building frame.

2.10 METAL BUILDING CURBS - See Roof Plan & Details

A. Refer to Section 07614 Metal Roof Curbs.

2.11 FABRICATION - FRAMING

A. Fabricate members in accordance with AISC Specification for plate, bar, tube or rolled shapes.

B. Anchor Bolts: Formed with bent or straight shank, assembled with template for casting into concrete.

C. Provide framing for doors, windows, ventilators, and louver openings.

2.12 FRAMING MEMBER THICKNESS (MINIMUMS)

A. Cold-Formed Primary Framing Members: 14 gage.

B. Cold-Formed Secondary Framing Members: 16 gage.

C. Intermediate Pipe Columns: 3/16".

D. Webs of Welded Built-up Members: 1/8".

E. Flanges of Welded Built-Up Members: 3/16".

F. Bracing Rods: 1/2 " diameter.

2.13 TYPICAL FRAMING COMPONENTS

A. Rigid Frames, Wind Unit Frames and Canopy Beams:
1. Fabricate rigid frames from hot-rolled structural steel. Provide built-up "I-Beam" shape rigid frames consisting of parallel flanged beams. Provide frames factory welded and shop painted. Furnish frames complete with attachment plates, bearing plates and splice members. Factory drill frames for bolted field assembly.
2. Provide length of span and spacing of frames as indicated. Slight variations in length of span and frame spacing may be acceptable if necessary to meet Manufacturer's standard.

B. Bearing End Frames: Consist of columns at the building corners and a continuous rafter beam supported by the end wall columns.

C. End wall Columns: 8 inch min. deep cold-formed "C" sections or welded built-up "I" shapes.

D. Purlins and Girts: Roll-Formed "Z" sections or open web joists, depth as required.

E. Eave Struts: "C" sections formed so as to provide adequate backup for both roof and wall panels at the building eaves.

F. Wind Bracing (When required)

1. Method: Diagonal rod bracing in both roof and sidewalls as required by calculations.
2. Reinforcing: Double roof purlins, inter-connected by diaphragms, in between the rigid frames at all points of attachment of diagonal roof bracing.
3. Provide temporary bracing during erection of structure.

G. Wind Bracing Omission: Permissible where the diaphragm strength of the roof covering is adequate to resist the longitudinal wind forces. Diaphragm action shall not be assumed for standing seam roof system.

H. Flange Bracing: Inside flange of all rigid frames shall be braced laterally by angles connected to the flange and web of the frame and to the web of the purlin or girt so that the allowable compressive stress is adequate for any combination of loading.

I. Base Support: A continuous member shall be provided to which the base of the wall covering may be attached. This member shall be:
1. A continuous 18 gage; 1.25 ounce coating class, galvanized, box-shaped member cast integrally with concrete foundation or 3 x 3 x 1/4" (76 x 76 x 6.4 mm) steel angle anchored to slab with 3/8 inch (9.5 mm) bolt and expand shield at 48 inch (1.22 m) centers; zinc coated 1.80 coating class.

J. Framed Openings: Structural framing members for all openings shall be adequate for the specified design loads. Framing members who are exposed to weather shall be galvanized steel.

K. Bolts: ASTM A325 bolts tightened by the calibrated wrench method shall have a hardened washer under the element (nut and bolt head) turned in tightening.

2.14 FABRICATION - WALL AND ROOF SYSTEMS

A. Expansion Joints: Same material and finish as adjacent material where exposed, (.0359) inch (.91mm) thick, Manufacturer's standard brake formed Infill type, of profile to suit system.

B. Flashings, Closure Pieces, Fascia, Infills, Caps, and accessories: Same material and finish as adjacent material, profile to suit system or formed as detailed, 24 gauge minimum.

C. Ventilator: Specification Division 15000 Mechanical and 16000 Electrical.

D. Wall Louvers: See specifications section 15 and Mechanical drawings

E. Roof Curbs, Pipe Flashing:
1. Roof Curbs: Section 07614 Prefabricated Metal Building Roof Curbs
2. Pipe Flashing: E.P.D.M. rubber or Dupont "Nordel"; sized to fit pipes

F. Batt Insulation: Refer Section 07213 Batt Insulation.

2.15 WEATHER-SEAL SCREWS

A. Type: No. 12-14 self-drilling or self-tapping.

B. Screw Shank: Carbon steel, plated with 0.0003" zinc or cadmium.

C. Washers: Recessed into head; neoprene, EPDM, PVC.

D. Head: 3/8" (9.5 mm) hex drive.

E. Head Cap: Zamak alloy or stainless steel.

F. Paint Finish:
1. Required, except, on unpainted panels
2. Color to match panels
3. Paint durability to match panels

2.16 SEALER

A. Locations: Sidelaps, endlaps and flashing. In addition, seal to abutting construction to make a water and airtight seal.

B. Material:
1. General Description: Fiber-filled, pressure sensitive tape, non-asphaltic, non-shrinking, non-drying, and non-toxic and shall have superior adhesion metals, plastics and painted surfaces at temperatures from 30 Degrees to +160 Degrees F. The material shall have a flashpoint of at least 300 Degrees F, and shall not flow at 200 Degrees F.
2. Minimum Specification: Equal to Gov. Spec. No. MIL-C-18969, Type II, Class B.
3. Size: 1/2" x 3/32" or 1" x 1/8".

2.17 FLASHING AND TRIM

A. Locations: At the rake, corners and eaves; at framed openings and whenever necessary to provide weather tightness and finished appearance.

B. Ridge Panel: Formed to match the slope and profile or adjoining panels. Provide continuous ridge vent.

C. Material, Finish: Match painted wall panels.

2.18 CLOSURES (PROFILE)

A. Solid or closed cell, preformed Ethylene-Propylene-Diene-Monomer (EPDM) or Ethylene Propylene Terpolymer (EPT) color gray, matching the profile of the panel.
1. Closures: Provide closures at eaves and rakes, fabricated of same material as metal wall panels.
2. Closure Strips: Closed-cell, expanded, cellular, rubber or crosslinked, polyolefin-foam or closed-cell laminated polyethylene; minimum 1-inch- thick, flexible closure strips; cut or premolded to match metal wall panel profile.

Provide closure strips where indicated or necessary to ensure weather tight construction.

2.19 FABRICATION GUTTERS AND DOWNSPOUTS

A. Fabricate of same material and finish as roofing metal.

B. Form gutters and downspouts of profile and size to collect and remove water. Fabricate with connection pieces.

C. Form sections in maximum possible lengths. Hem exposed edges. Allow for expansion at joints not to exceed 50 feet (15 m) spacing.

D. Fabricate support straps of same material and finish as roofing metal, color as selected.

2.20 FINISHES

A. Primarily Framing Members: Clean, prepare and shop prime to SSPC Manual requirements. Do not prime surfaces to be field welded.

B. Exterior Surfaces of Wall and Roof Components and Accessories: Precoated enamel on steel of fluorocarbon Kynar 500 finish, color as selected by architect.

C. Interior Surfaces of Wall Under Panel Components and Accessories: Precoated enamel on steel of fluorocarbon Kynar 500 finish, white color.

PART 3 - EXECUTION

3.1 EXAMINATION

A. Verify that foundation, floor slab, mechanical and electrical utilities, and placed anchors are in correct position.

3.2 ERECTION

A. Erect metal building system according to Manufacturer's written erection instructions and erection drawings.

B. Erect framing in accordance with AISC Specification.

C. Provide for erection and wind loads. Provide temporary bracing to maintain structure plumb and in alignment until completion of erection and installation of permanent bracing. Locate braced bays as indicated.

D. Base and Bearing Plates: Clean concrete- and masonry-bearing surfaces of bond-reducing materials, and roughen surfaces prior to setting plates. Clean bottom surface of plates.

1. Set plates for structural members on wedges, shims, or setting nuts as required.

2. Tighten anchor rods after supported members have been positioned and plumbed. Do not remove wedges or shims but, if protruding, cut off flush with edge of plate before packing with grout.
3. Promptly pack grout solidly between bearing surfaces and plates so no voids remain. Neatly finish exposed surfaces; protect grout and allow to cure. Comply with Manufacturer's written installation instructions for shrinkage-resistant grouts.

E. Do not field cut or alter structural members without approval.

F. After erection, prime welds, abrasions, and surfaces not shop primed.

3.3 ERECTION - PURLINS AND GIRTS

A. Provide rake or gable purlins with tight fitting closure channels and fascias.

B. Locate and space wall girts to suit door and window arrangements and heights.

C. Secure purlins and girts to structural framing and hold rigidly to a straight line by sag rods.

D. Purlins under steel roof decking to receive single ply roofing shall be spaced a maximum of 5 feet on centers or as shown on drawings.

3.4 ERECTION - BRACING

A. Provide diagonal rod or angle bracing in both roof and sidewalls as required.

B. Movement resisting frames may be used in lieu of sidewall rod bracing, to suit Manufacturer's standards.

C. Where diaphragm strength of roof coverage is adequate to resist wind forces, rod or other forms of bracing may be omitted.

3.5 ERECTION - FRAMED OPENINGS

A. Provide steel angles and bent plates to reinforce openings and to carry loads and vibrations imposed, including equipment furnished under mechanical and electrical work. Securely attach to building structural frame.

B. Provide 2 x 2 x 1/4 inch (50.8 x 50.8 x 6.4 mm) steel angles for openings 6 to 18 inches (152 to 457 mm) in size. Openings over 18 inches (457 mm) in size shall be reinforced with 4 x 4 x 1/4 inch (102 x 102 x 6.4 mm) steel angles in accordance with Section 05210. At roof curbs, where indicated, reinforce openings with 6 x 6 x 1/4 inch (152 x 152 x 6.4 mm) steel angles and 1/4 inch (6.4 mm) bent plates.

3.6 ERECTION - WALL AND ROOFING SYSTEM

A. Install in accordance with Manufacturer's instructions. Examination: Examine primary and secondary framing to verify that structural panel support members and anchorages have been installed within alignment tolerances required by Manufacturer.
   1. Examine roughing-in for components and systems penetrating metal panels to verify actual locations of penetrations relative to seam locations of metal panels before metal panel installation.

B. Exercise care when cutting pre-finished material to ensure cuttings do not remain on finish surface.

C. Fasten cladding system to structural supports, aligned level and plumb.

D. Locate end laps over supports. End laps minimum 6 inches (152 mm). Place side laps over bearing.

E. Provide expansion joints in accordance with Manufacturers' recommendation.

F. Use concealed fasteners at roof.

G. Use exposed fasteners at walls.

H. Install insulation and vapor retarder utilizing squeeze for attachment. Place wire mesh under vapor retarder for support between framing members.

I. Roof Panels: General: Provide metal roof panels of full length from eave to ridge, unless otherwise indicated or restricted by shipping limitations.
   1. Field-Assembled, Standing-Seam Metal Roof Panels: Fasten metal roof panels to supports with concealed clips at each standing-seam joint at location, spacing, and with fasteners recommended by Manufacturer.
      a. Install ridge caps as metal roof panel work proceeds.
      b. Flash and seal metal roof panels with weather closures at eaves and rakes. Fasten with self-tapping screws.
      c. Install clips to supports with self-tapping fasteners.
      d. Install pressure plates at locations indicated in Manufacturer's written installation instructions.
      e. Retain subparagraph above or first subparagraph below; coordinate with products selected in Part 2.
      f. Seamed Joint: Crimp standing seams with Manufacturer-approved motorized seamer tool so clip, metal roof panel, and factory-applied sealant are completely engaged.
      g. Rigidly fasten eave end of metal roof panels and allow ridge end free movement due to thermal expansion and contraction. Predrill panels for fasteners.
      h. Provide metal closures at peaks, rake edges, rake walls, and each side of ridge caps.

J. Sidewall Panels: Continuous from eave line to below the column base plated. Lap-Seam Metal Panels: Install screw fasteners with power tools having controlled torque adjusted to compress neoprene washer tightly without damage to washer, screw threads, or metal panels. Install screws in predrilled holes.

1. Arrange and nest side-lap joints so prevailing winds blow over, not into, lapped joints. Lap ribbed or fluted sheets one full rib corrugation. Apply metal panels and associated items for neat and weathertight enclosure. Avoid "panel creep" or application not true to line.

K. End wall Panels: All end wall panels shall be continuous to the roof line except where panel lengths are exceeded. Where panel lengths are exceeded, end wall panels shall be continuous to the eave line with panels above the eave line continuous to the roof line. Panels spliced at the eave line shall be square cut. Panels continuous to roof line shall be bevel cut to correspond to the roof slope. All end laps for end wall panels where required shall be a minimum of 4 inches and shall occur at a wall girt.

L. Roof Laps: Before securing, roof panels shall be sealed with a continuous ribbon of tape sealer, unless the optional anti-capillary groove is specified.

M. Roof Fastenings:

1. Roof panels shall be secured with concealed panel clips that are secured to secondary structure per Manufacturer’s requirements.
2. Side laps of roof panels shall be mechanically.

N. Wall Fastenings:

1. Wall panels shall be secured to girts with minimum No. 14 sheet metal screws at a maximum spacing of 12 inches.
2. At the endlaps of rib sheets, the maximum spacing shall be 6 inches (152 mm).
3. At the endlaps of "Hi-Rib" panels the fasteners shall be attached each side of the major rib.
4. At the sidelaps of "A" panels No.10 sheet metal screws shall be placed a maximum of 18 inches (457) mm) on center.

O. Joint Sealers: Install gaskets, joint fillers, and sealants where indicated and where required for weatherproof performance of metal panel assemblies. Provide types of gaskets, fillers, and sealants indicated or, if not indicated, types recommended by metal panel Manufacturer.

1. Seal metal panel end laps with double beads of tape or sealant, full width of panel. Seal side joints where recommended by metal panel Manufacturer.
2. Prepare joints and apply sealants to comply with requirements in Division 7 Section "Joint Sealants."

P. Metal Protection: Where dissimilar metals will contact each other or corrosive substrates, protect against galvanic action by painting contact surfaces with bituminous coating, by applying rubberized-asphalt underlayment to each contact surface, or by other permanent separation as recommended by metal roof panel Manufacturer.

3.7 ERECTION - GUTTER AND DOWNSPOUT

A. Rigidly support and secure components. Joint lengths with formed seams sealed watertight. Flash and seal gutters to downspouts.

B. Apply bituminous paint on surfaces in contact with cementitious materials

C. Slope gutters minimum 1/8 inch/ft (3 mm/m).

D. Install Pre-cast concrete splash blocks 18 x 36 inch (457 x 914 mm) under each downspout.

3.8 INSTALLATION LINER PANELS

A. Inspection:
1. Check supporting members for correct layout and alignment.
2. Verify that surfaces to receive liner panels are free of debris.
3. Do not proceed with installation until defects are corrected.

B. Installation
1. Install liner panels and accessories in accordance with the Manufacturer’s instructions.
2. Do not stretch or compress panel side-lap interlocks.
3. Secure panels without warp or deflection.

3.9 INSTALLATION - ACCESSORIES

A. Install door frame, door, exhaust fan, overhead door, accessories, window and glass, and louvers in accordance with Manufacturer's instructions.

B. Seal wall and roof accessories watertight and weather tight with sealant.

C. Batt Insulation- General: Install insulation concurrently with metal wall panel installation, in thickness indicated to cover entire wall, according to Manufacturer's written instructions.
1. Set vapor-retarder-faced units with vapor retarder to warm side of construction, unless otherwise indicated. Do not obstruct ventilation spaces, except for firestopping.
2. Tape joints and ruptures in vapor retarder, and seal each continuous area of insulation to surrounding construction to ensure airtight installation.
3. Install factory-laminated, vapor-retarder-faced blankets straight and true in one-piece lengths with both sets of facing tabs sealed to provide a complete vapor retarder.
4. Blanket Roof Insulation: Comply with the following installation method:
   a. Over-Framing Installation: Extend insulation and vapor retarder over and perpendicular to top flange of secondary framing members. Hold in place by metal roof panels fastened to secondary framing.

b. Retainer Strips: Install retainer strips at each longitudinal insulation joint, straight and taut, nesting with secondary framing to hold insulation in place.

5. Blanket Wall Insulation: Extend insulation and vapor retarder over and perpendicular to top flange of secondary framing members. Hold in place by metal wall panels fastened to secondary framing.
   a. Retainer Strips: Install retainer strips at each longitudinal insulation joint, straight and taut, nesting with secondary framing to hold insulation in place.

3.10 TOLERANCES

A. Framing Members: 1/4 inch (6 mm) from level; 1/8 inch (3 mm) from plumb

B. Siding and Roofing: 1/8 inch (3 mm) from true position.

3.11 FIELD QUALITY CONTROL

A. Testing Agency: Owner will engage a qualified testing and inspecting agency to perform the following tests and inspections and to submit reports.

B. Tests and Inspections:
   1. High-Strength, Field-Bolted Connections: Connections shall be tested at the Owners discretion and inspected during installation according to RCSC's "Specification for Structural Joints Using ASTM A 325 or A 490 Bolts."
   2. Welded Connections: In addition to visual inspection, field-welded connections shall be tested at the Owners discretion and inspected according to AWS D1.1 and the following inspection procedures, at inspector's option:
      a. Liquid Penetrant Inspection: ASTM E 165
      b. Magnetic Particle Inspection: ASTM E 709; performed on root pass and on finished weld. Cracks or zones of incomplete fusion or penetration will not be accepted.
      c. Ultrasonic Inspection: ASTM E 164
      d. Radiographic Inspection: ASTM E 94

C. Correct deficiencies in Work that test reports and inspections indicate do not comply with the Contract Documents.
   1. Contractor / Installer shall bare costs of re-inspections at work that did not comply.

3.12 CLEANING AND PROTECTION

A. Repair damaged galvanized coatings on galvanized items with galvanized repair paint according to ASTM A 780 and Manufacturer's written instructions.

B. Touchup Painting: After erection, promptly clean, prepare, and prime or reprime field connections, rust spots, and abraded surfaces of prime-painted structural framing, bearing plates, and accessories.

1. Clean and prepare surfaces by SSPC-SP 2, "Hand Tool Cleaning," or SSPC-SP 3, "Power Tool Cleaning."
2. Apply a compatible primer of same type as shop primer used on adjacent surfaces.

C. Metal Panels: Remove temporary protective coverings and strippable films, if any, as metal panels are installed. On completion of metal panel installation, clean finished surfaces as recommended by metal panel Manufacturer. Maintain in a clean condition during construction.
   1. Replace metal panels that have been damaged or have deteriorated beyond successful repair by finish touchup or similar minor repair procedures.

D. Louvers: Clean exposed surfaces that are not protected by temporary covering, to remove fingerprints and soil during construction period. Do not let soil accumulate until final cleaning.
   1. Restore louvers damaged during installation and construction period so no evidence remains of corrective work. If results of restoration are unsuccessful, as determined by Architect, remove damaged units and replace with new units.
      a. Touch up minor abrasions in finishes with air-dried coating that matches color and gloss of, and is compatible with, factory-applied finish coating.

END OF SECTION

SECTION 15050

BASIC MECHANICAL REQUIREMENTS

PART 1 - GENERAL

1.1 SECTION INCLUDES

A. Basic Mechanical Requirements specifically applicable to all Division 15 specifications.

1.2 REFERENCES, STANDARDS, AND REGULATORY REQUIREMENTS: The following state and local codes, ordinances, and industry standards shall be complied with on this project as applicable:

A. The "Authority Having Jurisdiction" for this project is the Owner, Texas Department of Transportation, as an Agency of the State of Texas. As such, it is required that the installation shall meet the minimum standards prescribed in the latest editions of the following listed codes and standards, which are made a part of these Specifications.

B. American National Standards Institute (ANSI): All current editions of applicable manuals and standards.

C. American Society of Mechanical Engineers (ASME): Boiler and Pressure Vessel Codes

D. Air Conditioning and Refrigeration Institute Standards (ARI): All standards related to refrigeration and air conditioning equipment and piping furnished under these Specifications.

E. Sheet Metal and Air Conditioning Contractors National Association, Inc. (SMACNA): All current editions of applicable manuals and standards.

F. Air Moving and Conditioning Association (AMCA): All current editions of applicable manuals and standards.

G. American Gas Association Publications (AGA): Directory of Approved Gas Appliances and Tested Accessories

H. American Society of Testing Materials (ASTM): All current editions of applicable manuals and standards.

I. National Fire Protection Association Standards (NFPA):
   1. NFPA No. 54, Gas Appliances, Piping, National Fuel Gas Code
   2. NFPA No. 70, National Electrical Code
   3. NFPA No. 72A, Local Protective Signaling Systems
   4. NFPA No. 72E, Automatic Fire Detectors
   5. NFPA No. 90A, Air Conditioning Systems
   6. NFPA No. 91, Blower & Exhaust Systems
   7. NFPA No. 101, Life Safety Code
   8. NFPA No. 211, Chimneys, Fireplaces and Vent Systems

9. NFPA No. 241, Standard for Safeguarding Construction, Alteration and Demolition Operations
10. NFPA No. 255, Method of Test of Surface Burning Characteristics of Building Materials
11. NFPA No. 258, Standard Research Test Method for Determining Smoke Generation of Solid Materials

J. National Electrical Manufacturers' Association (NEMA): All current editions of applicable manuals and standards.

K. Local Fire Department and the State Fire Marshall, as may be applicable to construction on this site.

L. National Sanitation Foundation (NSF): All current editions of applicable manuals and standards.

M. Occupational Safety and Health Act (OSHA): All applicable safety standards.

N. Texas Occupational Safety Act: All applicable safety standards.

O. International Building Code, latest edition.

P. Uniform Mechanical Code, latest edition.

Q. Uniform Plumbing Code, latest edition.

R. ASRAE 90.1 – State Energy Code, latest addition.

S. Refer to individual specification sections for additional Codes and Standards.

T. All materials and workmanship shall comply with all applicable state and national codes, specifications, and industry standards. In all cases where Underwriters' Laboratories, Inc. has established standards for a particular type material, such material shall comply with these standards. Evidence of compliance shall be the UL "label" or "listing" under re-examination service.

1.3 GENERAL MATERIALS AND EQUIPMENT REQUIREMENTS

A. Note that no asbestos-bearing, solvent based, or lead containing materials shall be used on this project. If any prohibited materials are installed, all of the material, including the underlying material, shall be removed and disposed of as required by local, state, and federal requirements.

B. The Contractor shall execute all work hereinafter specified or indicated on accompanying Drawings. Contractor shall provide all equipment necessary and usually furnished in connection with such work and systems whether or not mentioned specifically herein or on the Drawings.

C. The Contractor shall be responsible for fitting the material and apparatus specified in this division into the building and shall carefully lay out the specified work at the site to

conform with the structural conditions, to avoid all obstructions, to conform to the details of the installation and thereby to provide an integrated installation operating as a complete set of systems.

D. Verification of Dimensions: The Contractor shall be responsible for the coordination and proper relation of his work to the building structure and to the work of all trades. The Contractor shall visit the premises and become thoroughly familiarize with all details of the work and working conditions, to verify all dimensions in the field, and to advise the Design Engineer of any discrepancy before performing any work. Adjustments to the work required in order to facilitate a coordinated installation shall be made at no additional cost to the Owner or the Design Engineer.

E. The Mechanical, Plumbing, and associated Drawings are necessarily diagrammatic by their nature, and are not intended to show every connection in detail or every pipe or conduit in its exact location. These details are subject to the requirements of standards referenced elsewhere in these specifications, and structural and architectural conditions. The Contractor shall carefully investigate structural and finish conditions and shall coordinate the separate trades in order to avoid interference between the various phases of work. Work shall be organized and laid out so that it will be concealed in furred chases and suspended ceilings, etc., in finished portions of the building, unless specifically noted to be exposed. All work shall be installed parallel or perpendicular to the lines of the building unless noted otherwise.

F. When the Drawings do not give exact details as to the elevation of pipe, conduit and ducts, the Contractor shall physically arrange the systems to fit in the space available at the elevations intended with proper grades for the functioning of the system involved. Piping, exposed conduit and the duct systems are generally intended to be installed true and square to the building construction, and located as high as possible against the structure in a neat and workmanlike manner. The Drawings do not show all required offsets, control lines, pilot lines and other location details. Work shall be concealed in all finished areas.

G. Storage at Site: The Contractor shall not receive material or equipment at the job site until there is suitable space provided to properly protect equipment from rust, drip, humidity, and dust damage.

H. Capacities and capabilities of materials and equipment specified or scheduled for this project shall be not less than those indicated. In addition, the materials and equipment shall be such that no component or system becomes inoperative or is damaged because of startup or other overload conditions.

I. Conformance with Agency Requirements: Where materials or equipment are specified to be approved, listed, tested, or labeled by the Underwriters' Laboratories, Inc. (UL), or constructed and/or tested in accordance with the standards of the American Society of Mechanical Engineers (ASME) or the Air Moving and Conditioning Association (AMCA), the Contractor shall submit proof that the items furnished under this Section of the Specifications conform to such requirements. The label of the Underwriters Laboratories, Inc., applied to the item will be acceptable as sufficient evidence that the

items conform to such requirements. The ASME stamp and the AMCA label will be acceptable as sufficient evidence that the items conform to the respective requirements.

J. Nameplates: Each major component of equipment shall have the Manufacturer's name, address, and catalog number on a plate securely attached to the item of equipment. All data on nameplates shall be legible at the time of Final Inspection. Under no circumstances shall any nameplate be painted over for any reason. If a new or existing nameplate is painted over, the nameplate shall be restored to as new condition, or replaced with a new nameplate provided by the Manufacturer.

K. Protection from Moving Parts: Belts, pulleys, chains, gears, couplings, projecting setscrews, keys, and other rotating parts shall be fully enclosed or properly guarded for personnel protection.

1.4 DEFINITIONS (Note: These definitions are included here to clarify the direction and intention of this specification. The list given here is not by any means complete. For further clarification as required, Contractor shall contact the designated Owner's Representative.):

A. AND/OR: Where "and/or" is used in these Specifications or on the Drawings, it shall mean that situations exist where either one or both conditions occur or are required and shall not be interpreted to permit an option on the part of the Contractor.

B. APPROVE: Where used in conjunction with Architect's/Engineer's response to submittals, requests, applications, inquiries, reports and claims by Contractor, the meaning of term "approved" will be held to limitations to Architect's/Engineer's responsibilities and duties as specified in General and Supplementary Conditions. In no case will approval by Architect/Engineer be interpreted as a release of Contractor from responsibilities to fulfill requirements of contract documents or to extend Architect's/Engineer's responsibility into Contractor's area of construction supervision and job safety.

C. ARCHITECT (or DESIGN ARCHITECT): The "Architect" or "Design Architect" is defined as the architect whose seal appears on the construction specifications title page and on the drawings for the particular area under consideration.

D. AS REQUIRED: Where "as required" is used in these Specifications or on the drawings, it shall mean that situations exist that are not necessarily described in detail or indicated that may cause the Contractor certain complications in performing the work described or indicated. These complications entail the normal coordination activities expected of the Contractor where multiple trades are involved and new or existing construction causes deviations to otherwise simplistic approaches to the work to be performed. The term shall not be interpreted to permit an option on the part of the Contractor to achieve the end result.

E. AUTHORITY HAVING JURISDICTION: The Texas Department of Transportation, the Owner, as an agency of the State of Texas is the "Authority Having Jurisdiction" in any matter of code assignment, interpretation, etc., as applies to this project. In many cases, at the Owner's option, the Authority Having Jurisdiction may choose to apply the policies and procedures of an Authority not having jurisdiction, and as such, delegate its authority over some issues. In the event that some of its authority has been delegated to

another Authority, such delegation will be specifically delineated in these specifications. In many instances the sections of the specifications will include references which will indicate codes, standards, and regulations which have bearing on the project, and will be enforced by the Authority Having Jurisdiction. The Owner may, at its option and at any time, defer to a local jurisdiction as the Authority Having Jurisdiction. This action, if taken, shall not subrogate any of the authority of the Owner, nor have any bearing on other unrelated requirements of these specifications.

F. CONCEALED: "Concealed" areas are those areas which cannot be seen by the building occupants, such as inside walls or above ceilings.

G. DIRECTED, REQUESTED, etc.: Where not otherwise explained, terms such as "directed", "requested", "authorized", "selected", "approved", "required", "accepted", and "permitted" mean "directed by the Architect/Engineer," "requested by the Architect/Engineer" and similar phrases. However, no such implied meaning will be interpreted to extend the Architect's/Engineer's responsibility into Contractor's area of construction supervision and job safety.

H. ENGINEER (or DESIGN ENGINEER or ENGINEER OF RECORD): The "Engineer" or "Design Engineer" or "Engineer of Record" is defined as the engineer whose seal appears on the construction specifications title page and on the drawings for the particular area under consideration. Note that in some cases, the work of two or more Engineers may appear on the same drawing or document. In that case the area of responsibility of each Engineer will be noted in the area of each signed seal.

I. EXPOSED: "Exposed" areas are all areas which are exposed to view by the building occupants including under counters, inside cabinets and closets, plus all mechanical and electrical rooms.

J. FURNISH:
1. The term "furnish" is used to mean "supply and deliver to project site, ready for unloading, unpacking, assemble, installation, and similar operations."
2. Where "furnish" applies to work for which the installation is not otherwise specified "furnish" in such case shall mean "furnish and install."

K. INDICATED: The term "indicated" is a cross reference to graphic representations, notes or schedules on drawings, to other paragraphs or schedules in the specifications, and to similar means of communicating the requirements of the contract documents. Where terms such as "shown", "noted", "scheduled", and "specified" are used in lieu of "indicated", it is for the purpose of helping the reader locate the cross reference, and no limitation of location is intended except as specifically noted.

L. INSTALL: The term "install" is used to describe operations at project site including unloading, unpacking, assembly, erection, placing, anchoring, applying, working to dimension, finishing, curing, protecting, cleaning and similar operations.

M. OWNER: As used in these specifications, "Owner" means the Texas Department of Transportation, as represented by an assigned representative.

N. PROVIDE: The term “provide” means “to furnish and install, complete and ready for intended use.”

1.5 UTILITY CONNECTIONS AND INSPECTIONS

A. General: Refer to DIVISION 1 for construction phasing and time increments.

B. Fees and Costs: If, during the course of the construction, a need arises to purchase utilities, the Contractor shall pay all fees attendant thereto. If the City or other privately or publicly owned utility piping or electrical cable needs to be extended, relocated, or terminated, the Contractor shall pay all permits and construction/inspection fees associated with that particular work, the costs for which shall be included in the Contract price, including the cost of setting meters.

C. All work performed on this project is under the authority of the State of Texas, however, some local construction fees or construction or inspection permits may be required for new service taps, or new or modified connections to City or utility company controlled services. Refer to the Division 1 Section of specifications on “Special Conditions” for clarification, or contact the regulating entity directly. Note also that if inspections by personnel of jurisdictions other than TxDOT are specifically required by this document, then the Contractor is responsible for any fees or permits in connection to those requirements.

D. Compliance: The Contractor shall comply in every respect with all requirements of the National Fire Protection Association, the local Fire Department requirements and all utility company requirements. In no case does this relieve the Contractor of the responsibility of complying with these Specifications and Drawings where specified conditions are of higher quality or quantity than the requirements of the above-specified authorities. Where requirements of the Specifications and Drawings are more lenient than the requirements of the above authorities, the Contractor shall make installations in compliance with the requirements of the above authorities with no extra compensation.

1.6 COORDINATION OF THE CONTRACT DOCUMENTS

A. The interrelation of the Specifications, the Drawings, and the schedules are as follows: The Specifications determine the nature and quality of the materials and equipment, the Drawings establish the quantities, dimensions and details, and the schedules give the capacities and performance characteristics. If the Contractor requires additional clarification, a request shall be submitted in writing, and a response will be given in writing.

B. Should the Drawings or Specifications conflict within themselves, or with each other, the requirement with the greatest quantity and/or the highest quality shall prevail. The decision of the engineer of record for the system being installed shall be final.

1.7 FUTURE WORK

A. The work described in the drawings shall be performed under this contract. It shall be noted that certain equipment and systems have been sized to anticipate a possible future

addition to the building. It is imperative that the Contractor provide and install the equipment and systems as shown in the drawings and schedules, of the sizes, capacities and dimensions indicated.

1.8 SUBMITTALS

A. Submit under provisions of UGC (the "Uniform General Conditions") and Special Conditions Section of the Specifications, and as required herein.

B. Mark all submittal literature to indicate the precise selection of materials and equipment being submitted. Note that if the specific model or material is not indicated in the submittal, and there is more than one choice possible, the submittal may be rejected and resubmittal will be required.

C. Changes in Contract requirements will not be granted and shall not be implied by approval of submitted alternative materials and equipment. Changes will only be effected through the Change Order process, in writing.

D. Proposed Products List: Include all equipment and materials specified in the following sections:

1. 15060 – Supports and Anchors
2. 15090 – Piping Insulation
3. 15097 – Ductwork Insulation
4. 15210 – Reciprocating Air Compressors
5. 15400 – Plumbing, Piping and Associated Materials
6. 15540 – Fuel Fired Heaters
7. 15761 – Ductless Air Conditioning Systems
8. 15767 – Heat Pump Air Conditioning Systems
9. 15810 – Ductwork
10. 15820 – Ductwork Accessories
11. 15830 – Fans
12. 15850 – Air Outlets and Inlets
13. 15950 – Testing, Adjusting and Balancing

E. Provide submittals as required in each Division 15 section. Submit shop drawings and product data grouped to include complete submittals of related systems, products, and accessories in a single submittal.

F. Submit Fabrication Drawings whenever: 1) equipment proposed varies in physical size and arrangement from that indicated on the Drawings, thus causing rearrangement of equipment space, 2) where tight spaces require extreme coordination between ductwork, piping, conduit, and other equipment, 3) where called for elsewhere in these Specifications, and 4) where specifically requested by the Design Engineer. Fabrication Drawings shall be made at no additional charge to the Owner or the Design Engineer.

G. All required fabrication (shop) drawings, except as noted otherwise, shall be prepared at a scale of not less than 1/4" = 1'-0". Fabrication Drawings for ductwork and air handling units shall be drawn at a minimum scale of 3/8" = 1'-0". Submit three blueline prints of each Fabrication Drawing to the Design Engineer for review. Reproduction and submittal

of the Construction Documents is not acceptable. The Engineer will review the drawing and return one print with comments.

1.9 SUBSTITUTION OF MATERIALS AND EQUIPMENT

A. It is not the intent of the drawings and/or specifications to limit products to any particular Manufacturer or to discriminate against an "approved equal" product produced by another Manufacturer. Products of a particular Manufacturer may be mentioned to define a standard for acceptance and to serve as a reference in comparison with other products. On the other hand, when a Manufacturer's name appears in these specifications or in the drawings, it shall not be interpreted that the Manufacturer is unconditionally acceptable as a provider of equipment for this project. The successful Manufacturer or supplier shall meet all of the provisions of the appropriate specification and/or equipment schedule.

B. The specified products have been used in preparing the drawings and specifications and thus establish minimum qualities with which substitutes must be at least equal to be considered acceptable. The burden of proof of equality rests with the Contractor. The decision of the Engineer is final.

C. In the event that the Contractor submits a proposal for a substitution, and the review and negotiation of the substitution (if handled in a timely, expedited manner) results in a delay of the contract work, then a reasonable extension of time for the contract may be allowed.

1.10 MATERIALS AND WORKMANSHIP

A. All materials, unless noted otherwise, shall be new, free from all defects, suitable for the intended use, and of the best quality of their respective kinds.

B. Materials and equipment shall be installed in accordance with the Manufacturer's recommendations and the best standard practice for the type of work involved.

C. All work shall be executed by mechanics and Contractors skilled in their respective trades, and the installations shall provide a neat, precise appearance.

D. Materials and/or equipment damaged in shipment or otherwise damaged prior to installation shall not be repaired, but shall be replaced with new materials and/or equipment.

E. Similar equipment shall be products of the same Manufacturer. For example, all air conditioning equipment, systems and components shall be manufactured and supplied by the same Manufacturer. All faucets, stops and hosebibbs shall be products of the same Manufacturer, with the exception that freezeproof hosebibbs may be products of a different Manufacturer than the rest of the faucets on the project.

1.11 FLAME SPREAD PROPERTIES OF MATERIALS

A. Materials and adhesives incorporated into this project shall conform to NFPA Standard 255, "Method of Test of Surface Burning Characteristics of Building Materials." The

classification shall not exceed a flame spread rating of 25, nor exceed a smoke developed rating of 50, for all materials, adhesives, finishes, etc. specified for each system.

1.12 MANUFACTURER'S RECOMMENDATIONS

A. The Manufacturer's published directions and/or recommendations shall be followed in the delivery, storage, protection, installation, piping, and wiring of all equipment and material. The Contractor shall promptly notify the Engineer, in writing, of any conflict between the requirements of the Contract Documents and the Manufacturers' directions, and shall obtain the Engineer's guidance before proceeding with the work. Should the Contractor perform any such work that does not comply with the Manufacturers' directions or such instructions from the Owner, the Contractor shall bear all costs arising in connection with the deficiencies.

1.13 SPACE AND EQUIPMENT ARRANGEMENT

A. The physical size and space requirements of mechanical and electrical equipment indicated on the Drawings are approximate and based on the dimensions of a particular Manufacturer. While other Manufacturers may be acceptable, it is the responsibility of the Contractor to determine if the equipment proposed by the Contractor will fit in the space.

B. All equipment shall be installed in a manner to permit access to all surfaces. All valves, motors, drives, filters, and other accessory items shall be installed to allow for service requirements without disassembly of another part. Service space requirements recommended by Manufacturers shall be provided in the installation of the equipment as a minimum.

C. All equipment and piping shall be installed in a manner to provide the greatest amount of clearance for access and maintenance of systems and equipment. Installation of piping and equipment which blocks personnel access to all parts of chases or mechanical spaces is prohibited.

1.14 PROTECTION

A. The Contractor shall at all times take such precautions as may be necessary to properly protect all materials and equipment from damage from the time of delivery until the completion of the work. This shall include the erection of all required temporary shelters and supports to adequately protect any items stored in the open on the site from the weather, the ground and surrounding work; the cribbing of any items above the floor of the construction; and the covering of items in the incomplete building with tarpaulins or other protective covering; the installation of electric heaters in electrical switchgear and similar equipment to prevent moisture damage. Failure on the part of the Contractor to comply with the above will be sufficient cause for the rejection of the items in question.

B. The Contractor shall take particular care not to damage the building structure in performing work. All finished floors and finished surfaces shall be covered to prevent any damage by workers or their tools and equipment during the construction of the building.

1.15 SUPERVISION

A. Each Contractor and Subcontractor shall provide a competent superintendent or foreman for the work of their trade.

B. It shall be the responsibility of the General Contractor to assure that each superintendent studies all Drawings and is familiar with the work to be coordinated with and performed by other trades. The General Contractor shall coordinate the work of all trades and, before material is fabricated or installed, assure that the work will not cause an interference with another trade. Where interferences are encountered, they shall be resolved at the job site by the superintendents involved. Where interferences cannot be resolved without major changes to the Drawings, the matter shall be referred to the Engineer for a ruling. The decision of the Engineer shall be final.

1.16 SITE OBSERVATION

A. Site observation by the Architect, Engineer, Owner or any of their representatives, is for the express purpose of verifying compliance by the Contractor with the Contract Documents, and shall not be construed as construction supervision nor indication of approval of the manner or location in which the work is being performed as being a safe practice or place.

B. The safety of the workers on the site is the responsibility of the Contractor. By entering the site, the Contractor, Subcontractors, and their employees relieve the Owner of any responsibility for their safety, and accept complete responsibility for any unsafe acts or procedures which may cause them harm.

1.17 GUARANTEE

A. **The Contractor shall guarantee all labor and materials furnished and installed under this contract for a period of one (1) year from date of FINAL ACCEPTANCE by Owner.** Certain work and materials shall be guaranteed for a longer period when so specified. The guarantee shall cover the repair or replacement without additional cost to the Owner, of any defective material or faulty workmanship.

B. In addition to the above, the Contractor shall warrant all compressors to be free of defect, and shall provide a new compressor, of similar capacity and quality, at no cost to the Owner, if one should fail for any reason, within 5 (five) years of the date of final acceptance. This warranty shall be limited only to the material compressor, and shall not include labor or additional materials, such as Freon charge. Contractor shall provide installation labor and related materials at a reasonable cost.

C. If the Contractor fails to perform under these requirements, then the Uniform and Special General Conditions shall govern any required remedies the Owner may be forced to take.

1.18 CUTTING AND PATCHING

A. General: Provide openings in all new or existing construction indicated in the drawings, or as necessary for the proper installation of all systems included in the project.

B. Methods of cutting: Openings cut through concrete and masonry shall be made with masonry saws and/or core drills and at such locations acceptable to the Construction Inspector and Design Engineer. Impact-type equipment shall not be used except where specifically acceptable to the Design Architect and Engineer. Openings in precast concrete slabs for pipes, conduits, outlet boxes, etc., shall be core drilled to exact size.

C. Restoration: All openings shall be finished, closed around penetrating materials as specified, or restored to "as-new" condition under the appropriate Specification Section for the materials involved, and shall match remaining surrounding materials and/or finishes.

D. Masonry: Where openings are cut through masonry walls, provide and install lintels or other structural supports to protect the remaining masonry. Adequate supports shall be provided during the cutting operation to prevent any damage to the masonry occasioned by the operation. All structural members, supports, etc., shall be of the proper size and shape, and shall be installed in a manner acceptable to the Design Engineer.

E. Plaster: All mechanical work in areas containing plaster shall be completed prior to the application of the finish plaster coat. Cutting of finish plaster coat will not be permitted.

F. Special Note: No cutting, boring, or excavating which will weaken the structure shall be undertaken.

G. Refer to Division 2 specifications for requirements governing trenching.

1.19 ROOF PENETRATIONS AND FLASHING

A. Pipe, conduit and duct sleeves, pitch pockets, roof curbs, and flashings compatible with the roofing installation shall be provided and installed by a qualified Contractor for all roof penetrations. This shall be the responsibility of the General Contractor. All size and performance of each penetration, flashing and roof curb shall be coordinated with the piping, duct, and/or equipment requiring it. Refer to other specifications, drawings and/or schedules for specific requirements.

1.20 OPERATION PRIOR TO COMPLETION

A. When any piece of mechanical equipment is operable and it is to the advantage of the Contractor to operate the equipment for a purpose other than testing (for a period longer than one hour), the Contractor may do so, providing that the operation is properly supervised, and the Construction Inspector has given written permission. The warranty period shall not commence until such time as the equipment is operated for the beneficial use of the Owner, or date of substantial completion, whichever occurs first.

B. No equipment shall be operated, even for test purposes, until it has been thoroughly swept and vacuumed clean of dust, dirt, debris, and equipped with the proper filter.

C. Regardless of whether or not the equipment has or has not been operated, the Contractor shall properly clean the equipment, install clean filters, properly adjust, and complete all

deficiency list items before final acceptance by the Owner as described in the following paragraph. The date of acceptance and performance certification shall be the same date.

1.21 CHECKING AND TESTING MATERIALS AND/OR EQUIPMENT

A. Check inspections shall include, but not be limited to, heating, insulation, ventilating equipment, controls, miscellaneous mechanical equipment and such other items hereinafter specified or specifically designated by the Engineer of Record.

B. Commissioning of equipment and systems shall consist of, as a minimum:
   1. Verify that installation is as designed and specified in the construction drawings and specifications.
   2. Complete Manufacturer's recommended installation and startup checks and perform the following:
      a. Inspect for visible damage and correct all damage.
      b. Verify Manufacturer recommended and designed minimum clearances have been provided.
      c. Verify that all service access panels are accessible and hinged doors are fully operational as installed.
      d. Check that labels and schedules are clearly visible.
      e. Check for and remove all construction debris.
      f. Verify that controls are connected and operable.
      g. Check for and remove shipping bolts, blocks and tie-downs.
      h. Verify that the proper size filters have been provided and are installed properly.
      i. Adjust vibration isolators.
      j. Check and repair all damaged insulation and vapor barriers.
      k. Check all manual and automatic dampers for free operation through their full travel.
   3. Lubricate bearings on fan.
   4. Check that fan rotates in correct direction without vibration or binding.
   5. Start units according to Manufacturer's written instructions. Complete startup sheets and attach copy with Contractor's startup report and close out documents. Contractor may use Manufacturer's printed startup sheet or a copy of the one attached at the end of this section.
   6. Check and record performance of interlocks and protection devices; verify sequences of operation.
   7. Operate unit for an initial period as recommended or required by Manufacturer or these specifications, whichever is greater.
   8. Calibrate and check full function and operation of thermostats.
   9. Adjust and check high temperature limits.
   10. Check for the free operation of internal isolators, and adjust if necessary.
   11. Check controls for correct sequencing of heating, cooling, and normal and emergency shutdown.
   12. Record all additional temperatures, pressures, air flows, amperages, etc., required to verify unit's operation at or above specified or scheduled efficiency rating.
   13. After startup and performance testing, replace filters, vacuum all coils, lubricate bearings and adjust belts.

14. Demonstrate operation to TxDOT maintenance personnel as detailed in paragraph in Part 3 of this specification section.

1.22 CLEANING AND PAINTING

A. All equipment furnished by the mechanical Subcontractors shall be delivered to the job with a suitable factory protective finish. The following materials shall not be painted: copper, galvanized metal, stainless steel, fiberglass, and plastics such as PVC, PVDF, polypropylene, etc.

B. If painting is required, before painting, materials and equipment surfaces shall be thoroughly cleaned of cement, plaster, and other foreign materials, and all oil and grease shall be removed. Such surfaces shall be carefully wiped and all cracks and corners scraped out. Exposed metal work shall be carefully brushed down with steel brushes to remove rust and other spots and left smooth and clean.

C. Equipment nameplates shall be protected from being painted; suitable protection shall be afforded to the plates to prevent their being rendered illegible due to the painting operation, or receiving any overspray or spatter.

D. Scope of painting for Division 15 work in areas other than those defined as “exposed” is as follows:
1. All fuel piping (natural gas, LPG, etc.) installed under this project shall be painted whether concealed or exposed, in all areas of the project without exception. Fuel piping shall be painted “safety yellow” as defined by OSHA or furnished with Manufacturer applied “safety yellow” finish.
2. All uncovered, unprotected steel pipe, supports, exposed pipe and hanger rod threads shall be cleaned and painted with two coats of Tropical Paint Co. No. 77-black asphaltic emulsion. Galvanized steel and copper lines shall not be painted.
3. All canvas finishes including those in concealed spaces shall be painted with one sizing coat if not already sized, containing mildew resistant additive and Arabol adhesive prior to any other specified finish paint.
4. If insulated, steel piping shall be prime-painted prior to insulation.

E. The surfaces to be finish painted shall first be prepared as follows:
1. On canvas finishes pretreat as specified above. Insulated surfaces having vapor barrier jacket exposed to view shall first be painted with one (l) coat of sealer.
2. Galvanized and black steel surfaces shall first be painted with one (1) coat of P&L (Pratt & Lambert) galvanized metal primer. Primer may be eliminated on concealed fire and gas piping.
3. Painted aluminum surfaces shall first be painted with one (1) coat of P&L zinc chromate primer.
4. Cast iron pipe shall first be primed with a “nonbleed” primer.
5. The underside of all cast iron sinks not recessed in a cabinet are included as items to be painted in exposed areas.
6. All ferrous metal surfaces without a protective finish and not galvanized in exposed and concealed areas including chases, and above ceilings shall be

painted with two (2) coats of P&L zinc chromate primer as the construction progresses to protect against oxidation and deterioration.

PART 2 - PRODUCTS (Not Used)

PART 3 - EXECUTION

3.1 INSTALLATION METHODS

A. Support: All piping, ducts and conduits shall be adequately and properly supported from the building structure by means of hanger rods or clamps fastened to the building structure as herein specified. Sufficient support shall be provided and installed to restrain the movement of equipment, piping, ductwork and conduits from lateral movement during operation.

B. All pipe, conduits, etc., shall be cut accurately to measurements established from the actual building conditions and shall be worked into place without springing or forcing. All ducts, pipes and conduits run exposed in machinery and equipment rooms shall be installed parallel to the building lines, except that piping shall be sloped to obtain the proper pitch. Piping, ducts and conduits run in furred ceilings, etc., shall be similarly installed, unless noted otherwise. Conduits in furred ceilings and in other concealed spaces shall be neatly grouped and racked. All conduit and pipe openings shall be maintained in a sealed condition until the systems are closed with final connections.

C. All openings through all floors, walls, and roofs, etc., regardless of material, shall be sleeved for piping, ductwork, conduit, cable trays, etc. All penetrations shall be sleeved. Sleeves shall be set in new construction before concrete is poured, as cutting holes through any part of the concrete will not be permitted unless acceptable to the Architect/Engineer. See Section 15060 for sleeve specifications.

3.2 REQUIRED INSPECTIONS

A. Prior to the installation of any ceiling material, gypsum, plaster, or acoustical board, the Contractor shall notify the construction inspector so that arrangement can be made for an inspection of the above-ceiling area about to be “sealed” off. The Contractor shall give as much advance notice as possible, but no less than five (5) working days.

B. All above-ceiling areas will be subject to a formal inspection before ceilings are installed or installation is otherwise concealed from view. All mechanical and electrical work at and above the ceiling including items supported by the ceiling grid such as air inlets or outlets and lighting fixtures shall be complete and installed in accordance with contract requirements, including power to lighting fixtures, fans, and other powered items. Adequate lighting shall be provided to permit thorough inspection of all above-ceiling items. The purpose of this inspection is to verify the completeness and quality of the installation of the air conditioning systems, the electrical systems, the plumbing systems, and any other special above ceiling systems. The ceiling supports (tee bar or lath) shall

be in place so that access panel and light fixture locations are identifiable and so that clearances and access provisions may be evaluated.

C. No ceiling materials may be installed until the resulting deficiency list from this inspection is satisfied and the Construction Inspector has given approval.

3.3 TRAINING

A. When required in a Division 15 specification section, Contractor shall provide a minimum of six (6) hours of training for a minimum of four (4) of the Owner's personnel, on the operation and maintenance of the mechanical and plumbing systems, including filter replacement, the operation and programming of thermostats, and the location of access doors to hidden isolation valves, water hammer arrestors, etc. Contractor shall provide complete, written, Manufacturer's literature on all mechanical and plumbing systems for each person trained.

3.4 TESTING

A. Tests for specific systems and equipment are specified in associated specification sections or in the drawings. All tests specified or indicated shall be performed with the Owner present to witness such tests. All tests shall be individually documented, and the test report for each shall be included in the final documentation submitted to the Owner at the completion of the project. Data shall be delivered to the Design Engineer as specified under "Requirements for Final Acceptance". The documentation shall include as a minimum (see sample forms at the end of this section):
   1. Contractor firm name, supervisor's name, and name of personnel performing test
   2. Date and time of beginning of test, and date and time of test completion
   3. Description of equipment or system being tested
   4. Description of test being performed
   5. Description of outcome of test
   6. Dated signatures of person performing test, Contractor's supervisor, and Owner's representative, including legibly printed names and titles

B. The Construction Inspector shall be notified in writing at least 5 working days prior to each test and other Specification requirements requiring action on the part of the Construction Inspector. All equipment shall be placed in operation and tested for proper automatic control requirements before the balancing agency starts their work.

END OF SECTION

(Attachments follow)

ATTACHMENT TO SECTION 15050 - Sample test log forms (see Section 15050, Part 3, "TESTING."):

PROJECT: _____ **_____ District, _____ County** **Test Log**
Contractor firm name: Address: Phone Number:
Contractor Supervisor:
Description of System:
Description of Test:
Beginning of Test:(Date and Time)
Completion of Test:(Date and Time)
Outcome of test:
TEST IS APPROVED IF ALL SIGNATURES APPEAR BELOW **Contractor Supervisor:** Name and title _____ Signature _____ Date _____ **Testing Contractor:** Name and title _____ Signature _____ Date _____ **Owner:** Name and title _____ Signature _____ Date _____

PROJECT: _____
_____ District, _____ County
HVAC Equipment Startup Sheet

Equipment _____ Model #_____ Serial #_____

Technician _____ Date of startup_____

Additional accessories _____

Compressor voltage _____ amperage L1_____L2_____L3_____

Condenser Fan voltage _____ amperage L1_____L2_____L3_____

Evaporator Fan voltage _____ amperage L1_____L2_____L3_____

Heater voltage _____ amperage L1_____ L2_____ L3_____

Compressor Oil Pressure_____ Suction line Temperature_____ Pressure_____

Discharge Line Temperature _____Pressure_____

Hi-Lo Pressure cut-out_____

EAT_____ LAT_____

Crankcase heater amps_____

Freezestat setting_____

Fan Speed_____ CFM_____ Damper_____

Evaporator EAT(DB)_____EAT(WB)_____DAT(DB)_____DAT(WB)_____

Fan Speed_____CFM_____Damper_____

Superheat_____

Condensate drain operating _____ Secondary pan switch operating _____

Other/additional items:

Owner Representative:

Name and title _____

Signature _____ Date _____

SECTION 15060

SUPPORTS AND ANCHORS

PART 1 - GENERAL

1.1 SECTION INCLUDES

A. Pipe and equipment hangers and supports

B. Equipment bases and supports

C. Sleeves and seals

D. Flashing and sealing equipment and pipe stacks

1.2 RELATED SECTIONS

A. Section 15050 – Basic Mechanical Requirements

B. Section 15090 – Piping Insulation

C. Section 15097 – Ductwork Insulation

D. Section 15210 – Reciprocating Air Compressors

E. Section 15400 – Plumbing Piping and Associated Materials

F. Section 15540 – Fuel Fired Heaters

G. Section 15767 – Heat Pump Air Conditioning Systems

H. Section 15810 – Ductwork

I. Section 15820 – Ductwork Accessories

J. Section 15830 – Fans

K. Section 15850 – Air Outlets and Inlet

L. Section 15950 – Testing, Adjusting and Balancing

1.3 REFERENCES

A. ASME B31.2 – Fuel Gas Piping

B. ASME B31.9 – Building Services Piping

C. ASTM F708 – Design and Installation of Rigid Pipe Hangers

D. MSS SP58 – Pipe Hangers and Supports - Materials, Design and Manufacturer

E. MSS SP69 – Pipe Hangers and Supports - Selection and Application

F. MSS SP89 – Pipe Hangers and Supports - Fabrication and Installation Practices

G. NFPA 13 – Installation of Sprinkler Systems

H. SMACNA – HVAC Duct Construction Standards, latest edition

I. UL 203 – Pipe Hanger Equipment for Fire Protection Service

J. UPC – Uniform Plumbing Code, latest edition

K. UMC – Uniform Mechanical Code, latest edition

1.4 SUBMITTALS

A. Submit under provisions of Uniform General Conditions and Special Conditions, and Section 15050.

B. Product Data: Provide Manufacturers catalog data including load capacity.

C. Manufacturer's Installation Instructions: Indicate special procedures and assembly of components.

1.5 REGULATORY REQUIREMENTS

A. Conform to applicable code or standard for support of all systems.

PART 2 - PRODUCTS

2.1 PIPE HANGERS AND SUPPORTS

A. Manufacturers:
   1. Grinnell
   2. Approved equal

B. Supports, hangers, anchors and guides shall be provided for all horizontal and vertical piping.

C. All auxiliary steel required for pipe supports, anchors, guides, etc. shall be provided by the Mechanical Trades unless specifically indicated to be provided by others.

D. Contractor shall review all Drawings, including Structural Drawings, for details regarding pipe supports, anchors, hangers, and guides.

E. All pipe supports shall be of type and arrangement to prevent excessive deflection, to avoid excessive bending stresses between supports, and to eliminate transmission of vibration.

F. All rod sizes indicated in this Specification are minimum sizes only. This trade shall be responsible for structural integrity of all supports, anchors, guides, etc. All structural hanging materials shall have a minimum safety factor of 5 built in.

G. All floor supports of piping and equipment shall be structural steel, pipe, tubing, Unistrut, or similar materials. Threaded rod shall not be used to support piping or equipment from the floor.

H. Anchor points as indicated on Drawings or as required shall be located and constructed to permit the piping system to take up its expansion and contraction freely in opposite directions away from the anchored points.

I. Pipe supports, hangers, anchors, and guides shall be fastened to the structure only at such points where the structure is capable of restraining the forces in the piping system.

J. Hangers supporting and contacting brass or copper lines 3" in size and smaller shall be Grinnell Fig. CT-99c, adjustable, copper plated, tubing ring. Hangers supporting and contacting brass or copper lines 4" and larger shall be Grinnell Fig. 260, adjustable clevis, with a nut above and below the hanger, and approved neoprene isolating material between pipe (or tubing) and hanger on the support rod. For insulated copper or brass domestic water lines, hangers for all sizes of pipe shall be Grinnell Fig. 300, adjustable clevis, with a nut above and below the hanger, and approved neoprene isolating material between pipe (or tubing) and hanger on the support rod. Isolate all copper or brass lines from all ferrous materials with approved dielectric materials. Hangers supporting and contacting plastic piping shall be of equal design, but shall be padded with neoprene material or equal. The padding material and the configuration of its installation shall be submitted for approval.

K. Hangers supporting insulated lines where the outside diameter of the insulation is the equivalent of 8" diameter pipe or smaller in size and supporting all ferrous lines 6" and smaller in size shall be Grinnell Fig. 260, adjustable clevis, with a nut above and below the hanger on the support rod.

L. Hangers supporting and contacting ferrous lines larger than 6" in size and outside of insulation on lines with the outside diameter equivalent to 10" diameter pipe shall be Grinnell Fig. 260, adjustable clevis, with a nut above and below the hanger on the support rod.

M. Each hanger shall be properly sized to fit the supported pipe or fit the outside of the insulation on lines where specified. Hangers for dual or low temperature insulation pipes shall bear on the outside of the insulation, which shall be protected by support shields as specified in Section 15090 – PIPING INSULATION. Protect insulation from crushing by means of a section of rigid insulation to be installed at hanger points. Hangers for high temperature insulated pipes and all insulated hot and cold domestic water pipes shall

be encased in the insulation unless supported by trapezes in which case shield and rigid insulation shall be provided as specified above for low temperature insulated pipes.

N. Supports for vertical piping in concealed areas shall be double bolt riser clamps, Grinnell Fig. 261, or other approved equal, with each end having equal bearing on the building structure, and located at each floor. Two-hole rigid pipe clamps at 4 ft. on center or Kindorf channels and Grinnell Fig. 261 riser clamps may be used to support pipe from vertical surfaces or members where lines are not subject to expansion and contraction. Where brass or copper lines are supported on trapeze hangers or Kindorf channels the pipes shall be isolated from these supports with plastic tape with insulating qualities, or strut clamps as manufactured by Specialty Products Company, Stanton, California.

O. Pipe Supports in Chases and Partitions, or as detailed in the drawings: Horizontal and vertical piping chases and partitions shall be supported by hangers or other suitable support. Pipes serving plumbing fixtures and equipment shall be securely supported near the point where pipes penetrate the finish wall. Supports shall be steel plate, angles or special channels such as Unistrut mounted in vertical or horizontal position. Pipe clamps such as Unistrut P2426, P2008, P1109 or other approved clamps shall be attached to supports. Supports shall be attached to wall or floor construction with clip angles, brackets, or other approved method. Supports may be attached to cast iron pipe with pipe clamp, or other approved method. All copper or brass lines shall be isolated from ferrous metals with dielectric materials to prevent electrolytic corrosion.

P. Perforated strap iron (“plumbers tape”) or wire will not, under any circumstances, be acceptable as hanger material.

Q. Attachment:

1. The load and spacing on each hanger and/or insert shall not exceed the safe allowable load for any component of the support system, including the concrete which holds the attachments. Reinforcement at inserts shall be provided as required to develop the strength required.
2. Inserts for piping shall be of a type which will not interfere with reinforcing as shown on the structural Drawings and which will not displace excessive amounts of structural concrete.
3. All pipe supports shall be designed and installed to avoid interference with other piping, hangers, ducts, electrical conduit, supports, building structures, equipment, etc. All piping shall be installed with due regard to expansion and contraction and the type of hanger method of support, location of support, etc. shall be governed in part by this Specification.
4. Pipe hangers shall be attached to the structure as follows:
    a. Steel Beams: Where pipes and loads are supported under steel beams, approved type beam clamps shall be used.
    b. Steel Trusses: Where pipes and loads are supported from steel trusses, hanger rods shall be attached to bottom chord with brackets or angle clips.

R. Trapezes: Where multiple lines are run horizontally at the same elevation and grade, they may be supported on trapezes of Kindorf, Elcen, or approved equal, channel-suspended

on rods or pipes. Trapeze members including suspension rods shall each be properly sized for the number, size, and loaded weight of the lines they are to support.

S. Finishes: All hangers on piping including clevis hangers, rods, inserts, clamps, stanchions, and brackets, shall be dipped in Zinc Chromate Primer before installation. Rods shall be galvanized or cadmium plated after threading, in lieu of dipping zinc chromate. Universal concrete inserts shall be cadmium plated.

T. Provide any special foundations, hangers and supports indicated on the Drawings, specified elsewhere herein; or required by conditions at the site. Hangers and supporting structures for suspended equipment shall be provided as required to support the load from the building structure in a manner acceptable to the Engineer.

2.2 ACCESSORIES

A. Hanger Rods: Galvanized mild steel threaded both ends, galvanized threaded one end, or galvanized continuous threaded.

B. Sleeves: Provide sleeves for all piping and duct penetrations of walls and floor. Galvanized schedule 40 pipe for all pipe and conduit except uninsulated copper pipe. Use copper pipe as sleeves for uninsulated copper pipe.

2.3 INSERTS

A. Inserts: Malleable iron case of galvanized steel shell and expander plug for threaded connection with lateral adjustment, top slot for reinforcing rods, lugs for attaching to forms; size inserts to suit threaded hanger rods.

2.4 FLASHING

1. Metal Flashing: 26 gage galvanized steel.
2. Metal Counterflashing: 22 gage galvanized steel.
3. Roofing Flashing: See specifications for Roofing, elsewhere in these Specifications.
4. Caps: Steel, 22 gage minimum; 16 gage at fire resistant elements.

2.5 EQUIPMENT ROOF CURBS

A. Roof curbs shall be supplied and installed by the roof Manufacturer as specified in the architectural specifications. The sizes and types of roof curbs shall be coordinated with equipment requirements.

PART 3 - EXECUTION

3.1 INSTALLATION

A. Install all materials in accordance with Manufacturer’s instructions.

3.2 INSERTS

A. Provide inserts for placement in concrete formwork.

B. Where inserts are omitted, drill through concrete slab from below and provide through-bolt with recessed square steel plate and nut recessed into and grouted flush with slab.

3.3 PIPE HANGERS AND SUPPORTS

A. Support horizontal piping as scheduled.

B. Install hangers to provide minimum 1/2 inch space between finished covering and adjacent work.

C. Place hangers within 12 inches of each horizontal elbow.

D. Use hangers with 1-1/2 inch minimum vertical adjustment.

E. Support horizontal cast iron pipe adjacent to each hub, with 5 feet maximum spacing between hangers.

F. Support vertical piping at every floor. Support vertical piping at each floor at hub.

G. Where several pipes can be installed in parallel and at same elevation, provide multiple or trapeze hangers.

H. Support riser piping independently of connected horizontal piping.

I. Provide copper plated hangers and supports for copper piping.

J. Design hangers for pipe movement without disengagement of supported pipe.

K. Prime coat exposed steel hangers and supports. Hangers and supports located in crawl spaces, pipe shafts, and suspended ceiling spaces are not considered exposed, but shall be corrosion protected with galvanized plating.

L. Hanger Rods: (NOTE: All hanger rods shall be trimmed neatly so that no more than 1 inch of excess hanger rod protrudes beyond the hanger nut. In the event a rod is intentionally but temporarily left excessively long, for sloped or insulated lines for example, the contractor shall take appropriate measures to protect the pipe or other materials from damage.)

M. Provide and install sufficient support and lateral bracing to restrain all equipment and piping systems from lateral movement during operation of supported equipment and system(s).

3.4 FLASHING

A. Provide flexible flashing and metal counterflashing where piping and ductwork penetrate weather or weatherproofed walls, floors, and roofs.

B. Flash vent and soil pipes projecting 3 inches minimum above finished roof surface with lead worked one inch minimum into hub, 8 inches minimum clear on sides with 24 x 24 inches sheet size. For pipes through outside walls, turn flanges back into wall and caulk, metal counterflash, and seal.

C. Flash floor drains in floors with topping over finished areas with lead, minimum 10 inches clear on sides with minimum 48-inch diameter sheet size. Fasten flashing to floor drain clamp device.

D. Seal floor watertight to adjacent materials.

E. Adjust storm collars tight to pipe with bolts; caulk around top edge. Use storm collars above roof jacks. Screw vertical flange section to face of curb.

3.5 SLEEVES

A. Set sleeves in position in formwork. Provide reinforcing around sleeves.

B. Size sleeves large enough to allow for movement due to expansion and contraction. Provide for continuous insulation wrapping.

C. Extend sleeves through floor four inches above finished floor level. Caulk sleeves.

D. Sleeves through walls below grade shall be sized to accept a Link-Seal or similar type sealing system.

E. Where piping, ductwork or conduit penetrates floor, ceiling, or wall, close space between pipe or duct and adjacent work with fire stopping insulation and caulk air tight. Provide close fitting metal collar or escutcheon covers, as appropriate, at both sides of penetration.

F. Install chrome plated steel or stainless steel escutcheons at finished surfaces.

1.1 HANGER SPACING SCHEDULE

PIPE SIZE (inches)	MAX. HANGER SPACING (feet)	HANGER ROD (inches)
1/2 to 1-1/4	6.5	3/8
1-1/2 to 2	10	3/8
Plastic Pipe (All Sizes)	4	3/8
C.I. Bell and Spigot (or No-Hub)	5	5/8
NOTE: Also support all Cast Iron Bell and Spigot, and No-Hub piping at all joints and fittings. ("Plastic Pipe" refers to PVC, CPVC, PVDF, PP, PPDV, PE, etc.)		

END OF SECTION

SECTION 15090

PIPING INSULATION

PART 1 - GENERAL

1.1 SECTION INCLUDES

A. Piping insulation

B. Jackets and accessories

1.2 PRODUCTS FURNISHED BUT NOT INSTALLED UNDER THIS SECTION

A. Section 15400 – Plumbing Piping and Associated Materials: Placement of hangers and hanger inserts

1.3 RELATED SECTIONS

A. Section 15050 – Basic Mechanical Requirements

B. Section 15400 – Plumbing Piping and Associated Materials

1.4 REFERENCES

A. ASTM B209 – Aluminum and Aluminum-Alloy Sheet and Plate

B. ASTM C177 – Steady-State Heat Flux Measurements and Thermal Transmission Properties by Means of the Guarded-Hot-Plate Apparatus

C. ASTM C195 – Mineral Fiber Thermal Insulation Cement

D. ASTM C335 – Steady-State Heat Transfer Properties of Horizontal Pipe Insulation

E. ASTM C449 – Mineral Fiber Hydraulic-setting Thermal

F. ASTM C518 – Steady-State Heat Flux Measurements and Thermal Transmission Properties by Means of the Heat Flow Meter Apparatus

G. ASTM C533 – Calcium Silicate Block and Pipe Thermal Insulation

H. ASTM C534 – Preformed Flexible Elastomeric Cellular Thermal Insulation in Sheet and Tubular Form

I. ASTM C547 – Mineral Fiber Preformed Pipe Insulation

J. ASTM C585 – Inner and Outer Diameters of Rigid Thermal Insulation for Nominal Sizes of Pipe and Tubing (NPS System)

K. ASTM C591 – Rigid Preformed Cellular Urethane Thermal Insulation

L. ASTM C610 – Expanded Perlite Block and Pipe Thermal Insulation

M. ASTM C921 – Properties of Jacketing Materials for Thermal Insulation

N. ASTM D1056 – Flexible Cellular Materials – Sponge or Expanded Rubber

O. ASTM D1667 – Flexible Cellular Materials – Vinyl Chloride Polymers and Copolymers (Closed Cell Foam)

P. ASTM D2842 – Water Absorption of Rigid Cellular Plastics

Q. ASTM E84 – Surface Burning Characteristics of Building Materials

R. ASTM E96 – Water Vapor Transmission of Materials

S. NFPA 255 – Surface Burning Characteristics of Building Materials

T. UL 723 – Surface Burning Characteristics of Building Materials

1.5 SUBMITTALS

A. Submit under provisions of Uniform General Conditions and Special Conditions, and Section 15050.

B. Product Data: Provide product description, list of materials and thickness for each service, and locations.

C. Manufacturer's Installation Instructions: Indicate procedures which ensure acceptable workmanship and installation standards will be achieved.

1.6 QUALITY ASSURANCE

A. Materials: Flame spread / smoke developed rating of 25/50 or less in accordance with NFPA 255.

1.7 QUALIFICATIONS

A. Applicator: Company specializing in performing the work of this section with minimum three years experience.

1.8 DELIVERY, STORAGE, AND HANDLING

A. Deliver, store, protect, and handle products to site under provisions of Uniform General Conditions, Special Conditions and Section 15050.

B. Deliver materials to site in original factory packaging, labeled with Manufacturer's identification, including product density and thickness.

C. Store insulation in original wrapping and protect from weather and construction traffic.

D. Protect insulation against dirt, water, chemical, and mechanical damage.

1.9 ENVIRONMENTAL REQUIREMENTS

A. Maintain ambient temperatures and conditions required by Manufacturers of adhesives, mastics, and insulation cements.

B. Maintain temperature during and after installation for minimum period of 24 hours.

PART 2 - PRODUCTS

2.1 HOT AND COLD DOMESTIC WATER

A. All domestic (potable) hot and cold water lines in buildings, including valves, strainers, unions, flanges, etc., except where specifically noted to the contrary, shall be insulated.

B. Potable water piping shall be insulated with 3½ pound per cubic foot density preformed fiberglass insulation with a factory applied All Service Jacket, vapor sealing all joints, and factory performed fittings with vapor seal. Where pipe chases are tight, adequate provision shall be made at the rough in stage utilizing offset fittings or other means (except springing the pipe) to insure that insulation can be applied throughout the length of the pipe.

C. Valves shall be insulated with mitered pipe covering with voids filled with glass fiber blanket insulation. Valves and fittings shall be vapor sealed with a water base asphaltic emulsion. Fittings on concealed insulation shall be built up to the thickness of adjacent insulation with glass fiber fitting wrap and shall be finished with Glasfab tape embedded in vapor barrier emulsion. Exposed fitting insulation shall be built up to same thickness as adjoining pipe insulation with one coat cement and after drying shall be finished with a white vapor seal and canvas jacket secured with “Arabol” adhesive and be suitable for painting.

D. All insulated piping in outdoors locations shall be covered with smooth finished aluminum jacketing with ASJ and preformed fitting covers. Secure in place with 3/4” aluminum bands and seals, 3 per 3 foot section of jacketing. Jacketing to overlap 3”

E. Seams in jacket shall be placed in the least noticeable locations. Where seams, joint or fittings are rough they shall be covered with an application of insulating cement trowelled on smoothly before the canvas is applied with Arabol adhesive. The canvas must be free of wrinkles and have a smooth, neat appearance.

F. The hot and cold water piping and drain piping under all lavatories shall be insulated. Insulation shall be Truebro “Handi Lav-guard” insulation kit, Model #102W with accessory #105W for offset tailpiece, if applicable, conforming to ADA article 4.19.4, ANSI A117.1, BOCA article P-1203.4, and Texas Accessibility Standards. Insulation

shall be as specified or approved equal. All under sink piping shall be insulated without exception.

2.2 CONDENSATE DRAIN PIPING

A. Condensate drain piping from fan and coil units, coil banks, drinking fountain refrigeration units, drinking fountain drain piping, and other items of piping or equipment subject to condensation forming on the surface shall be insulated with 25/50 rated (flame spread/smoke developed), closed cell elastomeric thermal insulation. Elastomeric products shall be supplied in a preslit tubular form with a pressure sensitive adhesive system for closure and vapor sealing of the longitudinal joint. All elastomeric insulating products shall be guaranteed not to react with copper piping.

PART 3 - EXECUTION

3.1 EXAMINATION

A. Verify that piping has been tested before applying insulation materials.

B. Verify that surfaces are clean, foreign material removed, and dry.

3.2 INSTALLATION

A. Install materials in accordance with Manufacturer's instructions.

B. On exposed piping, locate jacket cover seams in least visible locations, but not higher than at the side of the pipe at the "90°" position, with the seam lapped such that the lap is directed down.

C. Insulated dual temperature pipes or cold pipes conveying fluids below ambient temperature:
1. Provide vapor barrier jackets, factory applied or field applied.
2. Insulate and seal vapor barrier at all fittings, joints, and valves with molded insulation of like material and thickness as adjacent pipe.
3. Finish with glass cloth and vapor barrier adhesive.
4. PVC fitting covers may be used at the contractor's option.
5. Continue insulation through walls, sleeves, pipe hangers, and other pipe penetrations.
6. Insulate entire system including fittings, valves, unions, flanges, strainers, flexible connections, pump bodies, and expansion joints.

D. For insulated pipes conveying fluids above ambient temperature:
1. Provide standard jackets, with or without vapor barrier, factory applied or field applied.
2. Insulate fittings, joints, and valves with insulation of like material and thickness as adjoining pipe.
3. Finish with glass cloth and adhesive.

4. PVC fitting covers may be used at the contractor's option.
5. For hot piping conveying fluids 140 degrees F or less, do not insulate flanges and unions at equipment, but bevel and seal ends of insulation.
6. For hot piping conveying fluids over 140 degrees F, insulate flanges and unions, including those at equipment, but label the insulation to indicate a concealed flange or union.

E. Inserts and Shields:
1. Application: Install shields between all hanger and piping insulation contact points. Install inserts on piping 2 inches diameter or larger.
2. Shields: Galvanized steel between pipe hangers or pipe hanger rolls and inserts.
3. Insert Location: Between support shield and piping and under the finish jacket.
4. Insert Configuration: Minimum 6 inches long, of same thickness and contour as adjoining insulation; may be factory fabricated.
5. Insert Material: Heavy density insulating material suitable for the planned temperature range, and the weight of the pipe.

F. Finish insulation at supports, protrusions, and interruptions.

G. All piping, equipment, ductwork, all plenums including metal and masonry construction, fans, etc., shall be insulated as indicated on the Drawings, as specified herein, and as required for a complete system. In each case, the insulation shall be equal to that specified and materials applied and finished as described in these Specifications.

H. All insulation shall be applied by mechanics skilled in this particular work and regularly engaged in such occupation. All insulation shall be applied in strict accordance with these Specifications and with factory printed recommendations on items not herein mentioned. Unsightly, inadequate, or sloppy work will not be acceptable, and all such work shall be removed and replaced as many times as necessary to achieve an acceptable installation.

I. All insulation, jacket, adhesives, mastics, sealers, etc., utilized in the fabrication of these systems shall meet NFPA 255 for fire resistant ratings (maximum of 25 flame spread and 50 smoke developed ratings) and shall be approved by the insulation Manufacturer for guaranteed performances when incorporated into their insulation system, unless a specific product is specified for a specific application, and is stated as an exception to this requirement. Certificates to this effect shall be submitted along with Contractor's submittal data for this section of the Specifications. No material may be used that, when tested by the ASTM E84-89 test method, is found to melt, drip or delaminate to such a degree that the continuity of the flame front is destroyed, thereby resulting in an artificially low flame spread rating, except where noted otherwise. A statement by the Manufacturer in the submittal literature that the material meets the requirements of NFPA 255 or UL 623 shall be deemed acceptable to meet the requirements of this specification.

J. All surfaces to be insulated shall be clean and dry before applying the insulation. All sections of molded pipe covering shall be firmly butted together. Where insulation terminates, it shall be neatly beveled and finished. No insulation shall be applied until the pipe, duct, etc., has been pressure tested and found tight. Piping, flexible

connections, flanges, valves, strainers, and unions shall be covered unless specifically noted otherwise. Flexible connections on duct, if used, shall not be covered. All materials used shall be fire retardant or nonflammable. Refer to Section 15050.

K. Where vapor barriers are required, the vapor barrier shall be on the outside. Extreme care shall be taken that the vapor barrier is unbroken. Joints, etc., shall be sealed. Where insulation with a vapor barrier terminates, it shall be sealed off with the vapor barrier being continuous to the surface being insulated. Ends shall not be left raw.

L. Where canvas finish is specified, use Arabol lagging adhesive to prevent mildew in securing canvas. Do not use wheat paste. In addition, cover all canvas insulation with a fire retardant coating.

M. The handling and installation of all insulation materials shall be performed in strict accordance with the Manufacturer's recommendations.

3.3 INSULATION SCHEDULE

Piping Type	Minimum Insulation Thickness
Hot and Cold Domestic Water	1"
Under Sink Domestic Water and Drain	(material as specified)
Condensate Drain Piping	½"

END OF SECTION

SECTION 15097

DUCTWORK INSULATION

PART 1 - GENERAL

1.1 SECTION INCLUDES

A. Ductwork insulation

B. Insulation jackets

1.2 RELATED SECTIONS

A. Section 15050 – General Mechanical Requirements

B. Section 15810 – Ductwork

C. Section 15820 – Ductwork Accessories

1.3 REFERENCES

A. TM B209 – Aluminum and Aluminum-Alloy Sheet and Plate

B. ASTM C518 – Steady-State Heat Flux Measurements and Thermal Transmission Properties by Means of the Heat Flow Meter Apparatus

C. ASTM C553 – Mineral Fiber Blanket and Felt Insulation

D. ASTM C612 – Mineral Fiber Block and Board Thermal Insulation

E. ASTM E84 – Surface Burning Characteristics of Building Materials

F. ASTM E96 – Water Vapor Transmission of Materials

G. NFPA 255 – Surface Burning Characteristics of Building Materials

H. SMACNA – HVAC Duct Construction Standards - Metal and Flexible

I. UL 723 – Surface Burning Characteristics of Building Materials

1.4 SUBMITTALS

A. Submit under provisions of the Uniform General Conditions and Special Conditions, and Section 15050.

B. Product Data: Provide product description, list of materials and thickness for each service, and locations.

C. Manufacturer's Installation Instructions: Indicate procedures which ensure acceptable workmanship and installation standards will be achieved.

1.5 QUALITY ASSURANCE

A. Materials: Flame spread/smoke developed rating of 25/50 in accordance with NFPA 255.

1.6 QUALIFICATIONS

A. Applicator: Company specializing in performing the work of this section with minimum three years experience.

1.7 DELIVERY, STORAGE, AND HANDLING

A. Deliver, store, protect and handle products to site under provisions of Uniform General Conditions, Special Conditions and Section 15050.

B. Deliver materials to site in original factory packaging, labeled with Manufacturer's density and thickness.

C. Store insulation in original wrapping and protect from weather and construction traffic.

D. Protect insulation against dirt, water, chemical, and mechanical damage.

1.8 ENVIRONMENTAL REQUIREMENTS

A. Maintain ambient temperatures and conditions required by Manufacturers of adhesives, mastics, and insulation cements.

B. Maintain temperature during and after installation for minimum period of 24 hours.

PART 2 - PRODUCTS

2.1 INSULATION

A. TYPE A – Rigid Board Insulation
   1. Three pound per cubic foot minimum density glass fiber semi-rigid board insulation with fiber perpendicular to the surface and with factory applied white foil reinforced vapor barrier jacket (ASJ). Insulation shall be equal to E.O. Woods Company "Rigid-Wrap".
   2. The insulation shall be secured to the ducts with mechanical fasteners; "Stick-clips", Graham Pins or Speed Clips, and shall be spaced approximately 12" on center on bottom of duct and where required elsewhere to hold insulation

securely against the duct as noted in the published recommendations of the Insulation Manufacturer.

3. After insulation is in place, all joints and seams shall be sealed with Foster 30-35 white vapor barrier emulsion applied over a 3" wide strip of Duramesh Glass Fabric. All protrusions through the vapor barrier shall be thoroughly sealed.
4. On ducts that are reinforced with standing seams or angle iron stiffeners 1" and over in height, the Contractor shall apply a strip of fiberglass board 1" thick by 6" wide, sealing same to the other insulation with mastic.
5. Vapor sealing of joints and seams is not required on hot duct application where concealed.

B. TYPE B – External Wrap Blanket Insulation

1. Blanket insulation with a thermal conductivity (K) of 0.27 or less similar in construction to Owens-Corning Fiberglass Series one and a half pound per cubic foot minimum density with foil reinforced Kraft (FRK) vapor barrier facing. Insulation shall be wrapped tightly on the ductwork with all circumferential joints butted and longitudinal joints overlapped a minimum of 2". Adhere insulation to metal with 4" strips of insulation bonding adhesive at 8" on center. On circumferential and longitudinal joints, the 2" flange of the facing shall be secured using 9/16" flare door staples applied 6" on center and taped with 4" wide fiberglass fabricated cloth tape embedded in Foster 30-35 white vapor barrier Emulsion and covered with Foster 30-35 white vapor barrier Emulsion until the tape is completely covered. All pin penetrations or punctures in facing shall also be taped. If the project is an existing building retrofit project contractor shall seal insulation joints with foil backed tape with woven string stapled in at least two places per side, in lieu of fiberglass fabricated cloth with mastic.

C. Top of ceiling diffusers shall be insulated with 1" Insulation B, exempt if diffuser has factory installed insulation.

D. Flexible round ducts are specified in Section 15810 as factory insulated.

PART 3 - EXECUTION

3.1 DUCT DIMENSIONS INDICATED IN THE DRAWINGS ARE NET INSIDE DIMENSIONS REQUIRED FOR AIR FLOW. DUCT CONSTRUCTION SHALL INCREASE DUCT SIZE TO ALLOW FOR INSULATION THICKNESS IF NECESSARY TO MAINTAIN INDICATED FREE AREA.

3.2 EXAMINATION

A. Ductwork shall be tested as specified before applying insulation materials.

B. Verify that ductwork has been tested before applying insulation materials.

C. Verify that surfaces are clean, foreign material removed, and dry.

3.3 INSTALLATION

A. Install materials in accordance with Manufacturer's instructions.

B. Insulated ductwork conveying air below ambient temperature:
1. Provide insulation with vapor barrier jackets.
2. Finish all joints and edges of insulating material with tape and vapor barrier jacket, sealed vapor tight.
3. Continue insulation through walls, sleeves, hangers, and other duct penetrations.
4. Insulate entire system including fittings, joints, flanges, the backs of diffusers, flexible connections, and expansion joints.

C. Insulated ductwork conveying air above ambient temperature:
1. Provide with or without standard vapor barrier jacket.
2. Insulate fittings and joints. Where service access is required, bevel and seal ends of insulation.

D. External Duct Insulation Application:
1. Secure rigid (not blanket) insulation with vapor barrier with wires and seal jacket joints with vapor barrier adhesive or tape to match jacket.
2. Secure insulation without vapor barrier with staples, tape, or wires.
3. Install without sag on underside of ductwork. Use adhesive or mechanical fasteners where necessary to prevent sagging. Lift ductwork off trapeze hangers and insert spacers.
4. Seal vapor barrier penetrations by mechanical fasteners with vapor barrier adhesive.
5. Stop and point insulation around access doors and damper operators to allow operation without disturbing wrapping.

E. Duct and Plenum Liner Application:
1. Adhere insulation with adhesive for 100 percent coverage.
2. Secure insulation with mechanical liner fasteners. Refer to SMACNA Standards for spacing.
3. Seal and smooth joints.
4. Seal liner surface penetrations with adhesive.

F. All piping, equipment, ductwork, all plenums including metal and masonry construction, fans, etc., shall be insulated as indicated on the Drawings, as specified herein, and as required for a complete system. In each case, the insulation shall be equal to that specified and materials applied and finished as described in these Specifications.

G. All insulation shall be applied by mechanics skilled in this particular work and regularly engaged in such occupation. All insulation shall be applied in strict accordance with these Specifications and with factory printed recommendations on items not herein mentioned. Unsightly, inadequate, or sloppy work will not be acceptable, and all such work shall be removed and replaced to achieve an acceptable installation.

H. All insulation, jacket, adhesives, mastics, sealers, etc., utilized in the fabrication of these systems shall meet NFPA for fire resistant ratings (maximum of 25 flame spread and 50 smoke developed ratings) and shall be approved by the insulation Manufacturer for guaranteed performances when incorporated into their insulation system, unless a specific product is specified for a specific application, and is stated as an exception to this requirement. Certificates to this effect shall be submitted along with Contractor's submittal data for this section of the Specifications.

I. All surfaces to be insulated shall be clean and dry before applying the insulation. All sections of molded pipe covering shall be firmly butted together. Where an insulation covering is applied, it shall lap the adjoining section of insulation by at least three inches (3"). Where insulation terminates, it shall be neatly beveled and finished. No insulation shall be applied until the pipe, duct, etc., have been pressure tested and found tight. Piping, flexible connections, flanges, valves, strainers, and unions shall be covered unless specifically noted otherwise. Flexible connections on duct shall not be covered.

J. Where vapor barriers are required, the vapor barrier shall be on the outside. Extreme care shall be taken that the vapor barrier is unbroken. Joints, etc., shall all be sealed. Where insulation with a vapor barrier terminates, it shall be sealed off with the vapor barrier being continuous to the surface being insulated. Ends shall not be left raw.

K. Extreme care shall be taken in covering ductwork to insure the duct is not pierced with sheet metal screws or other fasteners.

L. Where canvas finish is specified, use Arabol lagging adhesive to prevent mildew in securing canvas. Do not use wheat paste. In addition, cover all canvas insulation with a fire retardant coating.

M. The handling and installation of all insulation materials shall be performed in strict accordance with the Manufacturer’s recommendations.

3.4 TOLERANCE

A. Substituted insulation materials shall provide thermal resistance at least the amount specified, or within 10 percent at normal conditions, as materials indicated.

3.5 DUCT INSULATION SCHEDULE

A. Insulation type, location and thickness shall be as indicated on the drawings.

END OF SECTION

SECTION 15210

RECIPROCATING AIR COMPRESSORS

PART 1 - GENERAL

1.1 WORK INCLUDES

A. Reciprocating air compressor

B. Air receiver and accessories

C. Pressure Reducing Valves

D. Water Air separators

1.2 RELATED WORK

A. Section 15050 – Basic Mechanical Requirements

B. Section 15060 – Anchors and Supports

C. Section 15400 – Plumbing Piping and Associated Materials

1.3 REFERENCES

A. Air receivers shall meet requirements of ASME Code for Unfired Pressure Vessels and carry ASME approval stamp.

1.4 SUBMITTALS

A. Submit Manufacturer’s drawing and data sheets for each component.

B. Submit inspector's certificate for air receiver for inclusion in Operating and Maintenance Manuals.

PART 2 - PRODUCTS

2.1 ACCEPTABLE MANUFACTURERS

A. Ingersoll-Rand

B. SpeedAire

C. Substitutions: Under provisions of Uniform General Conditions and Special Conditions, and Section 15050

2.2 TYPE

A. Provide a total packaged configuration which shall include a starter, automatic drain valve, low oil level switch, an air cooled compressor mounted on a vertical receiver tank, and all the necessary controls. Refer to equipment schedule on drawings for additional requirements.

2.3 COMPRESSOR CONSTRUCTION

A. Construct compressor unit with cast iron housing and head, heat treated forged steel or ductile iron shaft, aluminum alloy connecting rods, aluminum pistons with non-lubricated carbon rings, high-strength alloy suction and discharge valves. Statically and dynamically balance rotating parts.

B. Mount motor and compressor on one piece ribbed cast iron or welded steel base with provision for V-belt adjustment.

2.4 AIR RECEIVER

A. Provide vertical receiver tank built to ASME regulations for working pressure of 175 psi. Flange or screw inlet and outlet connections.

B. Fittings shall include adjustable pressure regulator, safety valve, pressure gage, drain cock, and automatic condensate trap.

C. Tank Finish: Hot-dipped galvanized, baked enamel, or powder coat.

2.5 PRESSURE REDUCING VALVE

A. Provide pressure reducing station(s) complete with automatic reducing valve and bypass, and low pressure side relief valve and gage.

B. Valve capacity suitable to reduce pressure from 200 psi to 30 psi to be adjustable upwards from reduced pressure.

2.6 CONTROLS

A. Pressure switch to cut out at 100 psi with minimum differential of 20 psi.

B. Dual Compressor regulation shall be through lead-lag switch with time delay relay.

PART 3 - EXECUTION

3.1 INSTALLATION (Non-portable units)

A. Install compressor unit on concrete foundation with sole plates and isolators. Level and bolt in place.

B. Make air cock and drain connection on horizontal casing.

C. Install line size gate valve and anti-return valve on compressor discharge.

D. Install replaceable cartridge type filter silencer of adequate capacity for each compressor.

E. Place shut-off valve on water inlet to aftercooler. Pipe drain to floor drain.

F. Connect condensate drains to nearest floor drain.

G. Install valved drip connections at low points of piping system.

H. Install take-offs to outlets from top of main, with shut-off valve after take-off.

I. Install compressed air couplings, 3/8 inch female speed couplers, and pressure gages where outlets are indicated.

J. Install "T" pieces instead of elbows at changes in direction of piping. Fit open end of each "T" with plug.

3.2 INSTALLATION (Portable units)

A. Install compressed air couplings, 3/8 inch female speed couplers, and pressure gages where outlets are indicated.

B. Install "T" pieces instead of elbows at changes in direction of piping. Fit open end of each "T" with plug.

3.3 PERFORMANCE

A. Compressors shall operate at scheduled air volume and pressure without oil creep, overloading, and within 10 percent of peak efficiency. Refer to drawings for equipment schedule.

END OF SECTION

SECTION 15400

PLUMBING, PIPING AND ASSOCIATED MATERIALS

PART 1 - GENERAL

1.1 SECTION INCLUDES

A. Pipe and pipe fittings

B. Valves

C. Valve Boxes

D. Unions

E. Dissimilar Metal Connections

F. Sanitary waste and vent system

G. Domestic water supply and distribution system

H. Water hammer arrestors

I. Water closets

J. Urinals

K. Lavatories

L. Sinks

M. Faucets

N. Hose bibbs

O. Electric Water Coolers

P. Electric water heater

Q. Liquid propane and natural gas supply and distribution system

R. Compressed air system

1.2 RELATED SECTIONS

A. Section 15050 – Basic Mechanical Requirements

B. Section 15060 – Supports and Anchors

C. Section 15090 – Piping Insulation

D. Section 15210 – Reciprocating Air Compressors

E. Division 16 – Electrical

1.3 REFERENCES

A. AGA – American Gas Association

B. ANSI B31.2 – Fuel Gas Piping

C. ANSI B31.4 – Liquid Petroleum Transportation Piping Systems

D. ANSI/ASHRAE 90.1 – Energy Conservation in New Building Design

E. ANSI/NFPA 70 – National Electrical Code

F. ANSI/UL 174 – Household Electric Storage Tank Water Heaters

G. ANSI/NEMA 250 – Enclosure for Electrical Equipment (1000 Volts Maximum)

H. ANSI/ASSE 1011 – Hose Connection Vacuum Breakers

I. ANSI/ASME A112.19.1 – Enameled Cast Iron Plumbing Fixtures

J. ANSI/ASME A112.19.2 – Vitreous China Plumbing Fixtures

K. ANSI/ASME A112.19.5 – Trim for Water-Closet Bowls, Tanks, and Urinals (Dimensional Standards)

L. ANSI A112.26.1 – Water Hammer Arrestors

M. ANSI B31.9 – Building Service Piping

N. ASME A112.18.1 – Finished and Rough Brass Plumbing Fixture Fittings

O. ASME B16.18 – Cast Bronze Solder-Joint Pressure fittings

P. ASME B16.22 – Wrought Copper and Bronze Solder-Joint Pressure Fittings

Q. ASME B16.26 – Cast Bronze Fittings for Flared Copper Tubes

R. ASME B16.3 – Malleable Iron Threaded Fittings

S. ASTM A47 – Ferritic Malleable Iron Castings

T. ASTM A53 – Pipe, Steel, Black and Hot-Dipped Zinc Coated, Welded and Seamless

U. ASTM A74 – No-hub Cast Iron Soil Pipe and Fittings

V. ASTM A888 – Bell and Spigot Service Weight Cast Iron Soil Pipe and Fittings

W. ASTM B32 – Solder Metal

X. ASTM B42 – Seamless Copper Pipe

Y. ASTM B43 – Seamless Red Brass Pipe

Z. ASTM B75 – Seamless Copper Tube

AA. ASTM B88 – Seamless Copper Water Tube

BB. ASTM B251 – Wrought Seamless Copper and Copper-Alloy Tube

CC. ASTM B302 – Threadless Copper Pipe (TP)

DD. ASTM C564 – Rubber Gaskets for Cast Iron Soil Pipe and Fittings

EE. ASTM D1784 – "Standard Specification for Rigid Poly (Vinyl Chloride) (PVC) Compounds and Chlorinated Poly (Vinyl Chloride) (CPVC) Compounds"

FF. ASTM D1785 – Poly (Vinyl Chloride) (PVC) Plastic Pipe, Schedules 40, 80, and 120

GG. ASTM D2466 – Poly (Vinyl Chloride) (PVC) Plastic Pipe Fittings, Schedule 40

HH. ASTM D2564 – Solvent Cements for Poly (Vinyl Chloride) (PVC) Plastic Pipe and Fittings

II. ASTM D2729 – Poly (Vinyl Chloride) (PVC) Sewer Pipe and Fittings

JJ. ASTM D2855 – Making Solvent-Cemented Joints with Poly (Vinyl Chloride) (PVC) Pipe and Fittings

KK. AWWA C651 – Disinfecting Water Mains

LL. CISPI 301 – Cast Iron Soil Pipe and Fittings for Hubless Cast Iron Sanitary Systems

MM. CISPI 310 – Joints for Hubless Cast Iron Sanitary Systems

NN. NFPA 54 – National Fuel Gas Code

OO. NFPA 58 – Liquefied Petroleum Gas Code

PP. NSF – National Sanitation Foundation

QQ. PDI WH-201 – Water Hammer Arrestors

RR. TCEQ – Texas Commission for Environmental Quality, Water System Regulations

SS. UPC – Uniform Plumbing Code, latest edition

1.4 SUBMITTALS

A. Submit under provisions of Uniform General Condition and Special Conditions, and Section 15050.

B. Product Data: Provide data on pipe materials, pipe fittings, valves, and accessories. Provide Manufacturers catalog information. Indicate valve data and ratings.

1.5 QUALITY ASSURANCE

A. Valves: Manufacturer's name and pressure rating marked on valve body.

B. Piping: Manufacturer's name and piping designations clearly stamped on all piping. Markings shall also include applicable ASTM Standard and NSF Certification.

C. Manufacturer's Installation Instructions: Indicate assembly and support requirements.

D. Perform Work in accordance with State of Texas Department of Health and Texas Commission on Environmental Quality Standards.

E. Ensure products and installation of specified products are in conformance with recommendations and requirements of the following organizations:
1. National Sanitation Foundation (NSF)
2. National Electrical Manufacturers' Association (NEMA)
3. Underwriters Laboratories (UL)

1.6 QUALIFICATIONS

A. Manufacturer: Company specializing in manufacturing the Products specified in this section with minimum three years documented experience.

B. Installer: Company specializing in performing the work of this section with minimum of three years documented experience. All work on all plumbing systems shall be performed by, or under the direct, full-time supervision of a fully qualified and licensed Master Plumber holding a current license issued by the State of Texas.

1.7 REGULATORY REQUIREMENTS

A. Perform Work in accordance with the latest editions of the Uniform Plumbing Code, and TCEQ and TDH Regulations.

B. Conform to applicable code for installation of backflow prevention devices.

C. Conform to NSF, ANSI/NFPA 54, ANSI/NFPA 58, ANSI/NFPA 70, ANSI/UL 174, and ANSI/UL 1453, as appropriate, requirements for water heaters.

1.8 DELIVERY, STORAGE, AND HANDLING

A. Deliver, store, protect and handle products to site under provisions of Section 15050.

B. Accept valves on site in shipping containers with labeling in place. Inspect for damage.

C. Provide temporary end caps and closures on valves, piping and fittings. Maintain in place until installation.

D. Protect piping systems from entry of foreign materials by completing sections of the work, temporary covers, and isolating parts of completed system.

1.1 ENVIRONMENTAL REQUIREMENTS

E. Do not install or backfill buried piping when bedding is wet or frozen.

PART 2 - PRODUCTS

2.1 MANUFACTURERS, GENERAL

A. Each type of product shall be manufactured by the same company. In other words, all lavatories, water closets and urinals shall be the products of the same Manufacturer, and all faucets and hose bibbs (except for freezeproof hose bibbs) shall be the products of the same Manufacturer.

2.2 WALL, FLOOR AND CEILING PLATES

A. Except as otherwise noted, provide C.P. (chrome plated) brass wall plates (escutcheons) around all pipes, conduits, etc., passing exposed through walls, floors, or ceilings, in all spaces except underfloor and attic spaces. Plates shall be sized to fit snugly against the outside of the pipe or against the insulation on lines which are insulated and positively secured to such pipe or insulation. All equipment closets are classified as finished areas. Round and rectangular ducts shall have closure plates (NOT chrome plated) made to fit accurately at all penetrations of walls and ceilings.

2.3 DOMESTIC WATER SUPPLY AND DISTRIBUTION SYSTEMS

A. All piping of potable domestic water from the water isolation valve up to and including all piping within the confines of building walls shall be a part of the domestic water piping system. Domestic water piping material and installation shall be as previously described and as specified in the following paragraphs.

B. Unless otherwise shown on the Drawings, all above grade (and slab) domestic water piping shall be fabricated of Type K, hard drawn, copper pipe made of deoxidized copper (99.9% pure). Type K copper pipe shall conform in every detail to ASTM Standard Specifications for COPPER WATER TUBE, Serial Designation B-88, and it shall be provided in 10 or 20 foot straight lengths.

C. Unless otherwise shown on the Drawings, all below slab domestic water piping shall be fabricated of one continuous length (without joints) of Type K, soft drawn, copper pipe made of deoxidized copper (99.9% pure). Type K copper pipe shall conform in every detail to ASTM Standard Specifications for COPPER WATER TUBE, Serial Designation B-88. Note that if a branch must be made, then it shall be made above the slab. All tubing bends shall be made using a tubing bender designed to bend the size of pipe being bent.

D. Copper pipe may only be joined using non-lead-bearing solder, such as Dunton's 95-5 solder (95 percent tin, and 5 percent antimony) manufactured by W. M. Dunton Company, or approved equal. Silver solder consisting of 95 percent tin and 5 percent silver is the only acceptable material substitution.

E. All fittings for four inch (4") and smaller water lines shall be Streamline Solder Fittings manufactured by Streamline Pipe and Fittings Division, Mueller Brass Company, or approved equal. These wrought copper fittings shall be rigid and strong with openings machined to an accurate capillary fit for the copper pipe.

F. The hot and/or cold water supply lines to each and every fixture hereinafter specified shall be equipped with stop valves which shall be chromium plated, cartridge type.

G. All exposed piping and tubing (exceeding 1/4 inch) inside the building shall be chrome plated.

H. Care shall be exercised in fabricating plumbing lines to avoid all cross connections and to construct the piping systems in a manner which eliminates the possibility of water contamination. The piping systems have been designed in every case to avoid the possibility of reverse flow or back siphoning. Care shall be exercised in constructing plumbing lines to make certain that not only the letter, but the spirit, of these safety precautions is carried out to the fullest possible extent.

2.4 VALVES

A. No solder connected or grooved fitting valves shall be used on this project.

B. Ball valves shall be constructed with a three piece bronze body, stainless steel ball and stem, Teflon seats, packing and gasket, bronze gland follower, adjustable stuffing box, steel lever type handle, with plastic operating handle, quarter turn stops, and shall be class 150. Stem extensions shall be furnished for use in insulated lines.

C. Gate valves shall be constructed with a cast iron body, bonnet, wedge gate and handwheel, with a brass alloy stem, cast bronze seat rings, brass packing gland, and non-asbestos packing. All gate valves shall be Class 125, flanged bolted bonnet, and have a solid wedge gate.

D. Standard of Quality for Valves:

Valve Type	Valve Size		Manufacturer		
			Milwaukee	Nibco	Apollo
Ball Valve for shutoff and isolation	*4" and smaller	Domestic Hot & Cold Water Systems	BA-300S (up to 2")	T-595-Y-66	82-140-57
Gate Valve for shutoff and isolation	2" to 4" (threaded)	Water supply and distribution	------	T-617-O	------
Gate Valve for shutoff and isolation	2" to 8" (flanged)	Water supply and distribution	2885-FP	F-617-O	------
*Requires extended stem in insulated lines, and in situations noted in the drawings.					

2.5 VALVE BOXES

A. For each underground valve installed by the Contractor, where indicated in the construction plans, the Contractor shall provide and install a valve box in the location(s) shown in the plans. These valve boxes shall be designed to withstand heavy vehicular traffic and shall have a locking cast iron cover. The word "**WATER**" shall appear on each cover. Valve boxes shall be supported independently from the piping and shall not touch the piping. The boxes shall be installed so that their tops are just flush with or slightly above finished grade or paving.

2.6 UNIONS

A. Provide and install unions at appropriate points to permit removal of pipe and equipment without injury to other parts of the system. No unions will be required in welded lines or lines assembled with solder joint fittings except at equipment items, machinery items and other special pieces of apparatus. Unions in copper lines shall be Class 125 ground joint brass unions or Class 150 brass flanges if required by the mating item of equipment. Companion flanges on lines at various items of equipment, machines and pieces of apparatus shall serve as unions to permit removal of the particular items.

2.7 DISSIMILAR METAL CONNECTIONS

A. In all domestic water lines where the material of the pipe is changed from ferrous to copper or brass, a dielectric coupling shall be used at the transition. Unions connecting ferrous pipe to copper or brass pipe shall be dielectric type equal to Epco and shall meet the following requirements. All changes in piping material from ferrous to any other metal shall be installed with a dielectric union or fitting.

B. Insulated unions shall have an impervious insulation barrier capable of limiting galvanic current to one percent of the short circuit current in a corresponding bimetallic joint. When dry, the insulation barrier shall be able to withstand a 600 volt breakdown test.

2.8 SANITARY WASTE AND VENT SYSTEM

A. The sanitary waste system shall be installed as indicated on the Drawings complete with all fixtures, drains, traps and required connections. All fixtures and drains shall be properly vented and trapped. The Contractor shall complete the installation of the sanitary drainage system by making approved connections as indicated on the Drawings.

B. All sanitary waste and vent piping, unless specifically shown to the contrary, shall be service weight cast iron soil pipe conforming to ASTM Specifications A-888, hubless ("No-Hub") for eight inch (8") and smaller, each piece of pipe and each fitting shall have the Manufacturer's mark or name cast into it, from 5 feet outside the building footprint up to and including all waste and vent piping inside the building(s).

C. Clamps for no-hub piping shall conform to CISPI standard 310, and shall be 100 percent stainless steel, including the clamp body band, clamp straps, screw tighteners, and the bodies of the screw clamps. The sealing gasket shall be neoprene or EPDM rubber. All hubless clamps used in the project shall be stamped with the CISPI Approval, and shall be heavy duty with 4 bands on sizes up to 4" and 6 bands on sizes from 5" to 8". Clamps shall be "Widebody" clamps as manufactured by Tyler Pipe or approved equal.

D. At the option of the contractor, bell and spigot piping may be used for sanitary waste. The material used shall be Tyler Pipe, "Tyseal" or approved equal, conforming to ASTM standard A-74, and shall be stamped with the NSF and UL stamps. Sealing of the joints shall use neoprene gastketing materials and an adhesive lubricant such as manufactured by Black Swan, applied as recommended by the Manufacturer.

2.9 WATER HAMMER ARRESTORS

A. Acceptable Manufacturers:
   1. Wade
   2. Zurn
   3. Approved equal

B. Water hammer arrestors shall be installed as shown on the plumbing plans, extending connecting piping to above accessible ceilings or behind access panels, and shall be sized in accordance with Plumbing and Drainage Institute Standard PDI-WH201. If the latter is proposed, the Contractor shall submit a shop drawing of the complete plumbing plan, including all fixtures, and indicate the locations of all water hammer arrestors.

C. Water hammer arrestors shall be Wade Shokstops of all stainless steel construction with welded nested bellows, or approved equal.

2.10 FIXTURES, GENERAL

A. The Contractor shall provide vitreous china (unless noted otherwise) plumbing fixtures as scheduled and where indicated on the Drawings. The fixtures shall be free from mars or chips and shall be new, first quality and shall be furnished with sufficient supports in order to adequately hang each and every unit. The space between fixtures and masonry

walls shall be grouted with white silicone grout. The space between fixtures and gypboard or wood panel walls shall fit flat against the wall surface with no more than 1/16" gap.

B. Flush valves shall be as scheduled, and shall be the products of Sloan (Royal model), Zurn (Aquaflush model), or approved equal.

2.11 FITTINGS AND PIPES FOR FIXTURES

A. All faucets, fittings, supply stops and similar devices shall be of one Manufacturer unless otherwise specified. All water faucets and valve bodies shall be cast brass with a minimum copper content of 85%. They shall contain standardized interchangeable operating units (cartridges) constructed of a removable and replaceable unit containing all parts subject to wear. All water faucets shall contain an adjustable internal volume control unit. All exposed parts shall be chromium plated, unless noted otherwise.

B. All faucets, supplies, stops, and hose bibbs used in this project shall all be products of the same Manufacturer. All faucets, unless noted otherwise, shall be manufactured of solid cast brass, and have removable and repairable cartridges. All faucets shall be manufactured by Chicago Faucets or approved equal.

C. Fittings and piping shall be brass and, wherever exposed, shall be polished chrome-plated, unless noted otherwise.

D. Furnish and install all required water, waste, soil and vent connections to all plumbing fixtures, together with all fittings, supports, fastening devices, cocks, valves, traps, etc., leaving all in complete working order.

E. Supplies for all lavatories, sinks, and drinking fountains shall be loose key angle stops with 1/2" NPT female inlets and shall include wall flanges, and braided stainless steel riser hoses. All stops and riser hoses shall be installed under the sink or lavatory, and shall be accessible for use. All components shall be chrome plated, unless noted otherwise. In all cases, all piping, tubing, fittings, and faucets shall be installed using a mechanical connection, such as bull-nose, flared, flanged, or threaded fittings. Fittings requiring a friction fit using slip-on or gasketed connections are not acceptable.

2.12 LAVATORIES

A. Lavatories shall be as scheduled in the plumbing drawings.

2.13 WATER CLOSETS

A. Water closets, carriers, flush valves and seats shall be as scheduled in the plumbing drawings.

2.14 URINALS

A. Urinals, carriers and flush valves shall be as scheduled in the plumbing drawings.

2.15 HOSE BIBBS

A. Hose bibbs shall be as scheduled in the plumbing drawings. (NOTE that freezeproof hosebibbs may be of a different Manufacturer than that of the other faucets and hosebibbs.)

2.16 ELECTRIC WATER COOLER

A. Electric water cooler(s) shall be as scheduled in the plumbing drawings.

2.17 ELECTRIC WATER HEATER

A. Water heater shall be as scheduled in the drawings.

B. Heating elements of low watt density Incoloy sheathed, immersion type, designed to be individually field replaceable.

C. Water temperature control adjustable from 90°F to 160°F.

D. Water heaters shall be supplied and installed with a temperature and pressure relief (T&P) valve. A hard drawn, rigid Type K copper drain line from the T&P valve shall be installed, and shall be terminated in the location shown in the drawings, a minimum of 2" above the lowest overflow point of a sink, mop sink, or floor drain. The termination of the drain shall be installed using a 90° ell fitting, installed in the "down" position directly over the receptacle.

E. All piping connections to the water heater (except for the T&P drain line) shall include a dielectric union and an isolation valve. The cold and hot water piping above the dielectric unions shall be electrically bonded with a minimum AWG #8 solid copper wire, insulated with green insulation.

F. All water heaters shall be installed in a drain pan manufactured for that purpose, installed with a hard drawn, rigid Type K copper drain line, piped to the same location as the T&P drain line, and in the same manner described for the T&P drain line.

2.18 LIQUID PROPANE and/or NATURAL GAS DISTRIBUTION SYSTEM

A. The fuel gas system(s) shall be installed using the materials and methods as specified herein and in the following paragraphs.

B. Gas Cutoffs: Shall be as required by the Gas Company and the Uniform Plumbing Code. Where requirements differ, the higher quality or greater quantity shall govern.
   1. Main service entrance to building valve shall be a threaded iron body, lubricated plug valve as manufactured by Nordstrom, Figure 142, 200psi CWP, or approved equal.
   2. Gas cutoff valves shall be provided for each gas burning appliance. This valve shall be a lever operated, threaded brass, valve as manufactured by Conbraco Valve Company, Series 50, or approved equal.

C. Fuel Gas Piping:

1. All pipe used for the fabrication of fuel gas piping systems shall be Schedule 40 black steel pipe which conforms in every detail to Standard Specifications for WELDED AND SEAMLESS STEEL PIPE, ASTM Designation A53, Type E or S.
2. Unless otherwise specifically required, all steel pipe provided for fuel gas piping systems shall be provided with plain ends and assembled with weld fittings on all pipe 2-1/2" and larger. All piping 2" and smaller shall be threaded. No pipe smaller than 3/4" shall be used. From the emergency shutoff valve to the outlets the pipe shall be assembled with threaded fittings provided all joints are exposed or within the confines of the laboratory furniture.
3. Note that galvanized, brass, and copper piping and fittings are PROHIBITED for use in fuel gas service for this project.

D. Fittings: All threaded pattern fittings shall be Class 150 malleable iron fittings of Crane Company or Walworth Company manufacture (300 lb. for unions). Change of pipe size shall be by bell reducer. Reducing bushings are prohibited.

E. Dirt Legs: At all connections of fuel gas piping to equipment or other points of use, a dirt leg shall be provided. Each dirt leg shall be sized no smaller than the fuel gas piping to which they are connected. The dirt legs shall be installed vertically at a change in pipe direction where the leg will be lower than the connected piping, and shall be no less than 6 inches long, unless noted otherwise. The dirt legs shall be installed with a pipe cap at the bottom of the leg to facilitate cleaning of the leg.

F. Protective Coating:

1. Fuel gas piping systems installed underground shall utilize pipe which has been factory coated with Scotchkote protective resin No. 212. All materials, surface preparation, application and testing shall conform to Federal Specification L-C-530 B-Type 2, dated June 4, 1970. This coating shall be applied by A&A Coating Company, Lone Star, Texas, or approved equal.
2. Underground welded joints and fittings shall be coated with Scotchkote No. 306 epoxy resin and taped with vinyl Scotchwrap-50 brand tape. Flanged joints shall be given two coats of Koppers Company No. 300M Catalyzed Coal Tar Epoxy.
3. Under no circumstances shall any backfilling operations begin until these pipe protection operations have been completed, tested, and inspected.

2.19 COMPRESSED AIR DISTRIBUTION SYSTEM

A. All pipe used for the fabrication of compressed air piping systems shall be Schedule 40 galvanized steel pipe which conforms in every detail to Standard Specifications for WELDED AND SEAMLESS STEEL PIPE, ASTM Designation A53, Type E or S. Unless otherwise specifically required, all galvanized steel pipe provided for compressed air piping systems shall be provided with threaded ends and assembled with flanged fittings on all pipe 2-1/2" and larger. All piping 2" and smaller shall be threaded. No pipe smaller than 3/4" shall be used. From the shutoff valve to the outlets the pipe shall be assembled with threaded fittings.

B. Air Cutoffs shall be installed at the compressor discharge (or connection, for portable compressors), and at each point of use. Where requirements differ, the greater quality or quantity shall govern. The cutoff shall consist of a ball valve, and the operation of the handle shall not interfere with use of the tap, or the operation of the equipment. In most cases the ball valve shall be installed in a vertical position.

C. All points of use not shown in the drawings to be connected directly to equipment shall be installed not only with an "air cutoff" as described above, but also a quick disconnect air connection.

D. All threaded pattern fittings shall be Class 150 galvanized malleable iron fittings equivalent to those manufactured by Crane Company or Walworth Company (300 lb. for unions). Change of pipe size shall be by bell reducer. Reducing bushings are prohibited.

E. At all taps or connections of compressed air supply piping to equipment or other points of use shall be made in the vertical upward direction. This is intended to allow for the draining of water or condensation away from the point of use.

PART 3 - EXECUTION

3.1 EXAMINATION

A. Verify that walls and floor finishes are prepared and ready for installation of fixtures.

3.2 PREPARATION

A. Ream pipe and tube ends. Remove burrs. Bevel plain end ferrous pipe.

B. Remove scale and dirt, on inside and outside, before assembly.

C. Prepare piping connections to equipment with flanges or unions.

D. Coordinate cutting and forming of floor construction to receive plumbing fixture rough-ins to required elevations.

E. Rough-in fixture piping connections in accordance with minimum sizes indicated in fixture rough-in schedule for particular fixtures.

3.3 INSTALLATION

A. Provide non-conducting dielectric connections wherever joining piping of dissimilar metals. All such fittings and/or unions shall comply with the requirements listed in Part 2 of this section, as well as any special requirements listed in the drawings.

B. Install isolation valves and unions at each piece of equipment, such as water heater, etc., and in such a manner to allow for ease of removal of the equipment.

C. Route piping in an orderly manner and maintain gradient.

D. Install piping to conserve building space and not interfere with use of space. All piping shall be installed against the building construction, and shall not be installed in such a manner to interfere with the free movement of personnel within the space. Installation of piping shall not interfere with the ability of personnel to service and maintain equipment and systems within the space.

E. Group piping whenever practical at common elevations.

F. Install piping to allow for expansion and contraction without stressing pipe, joints, or connected equipment.

G. Provide clearance for installation of insulation and access to valves and fittings.

H. Provide access where water hammer arrestors, valves and fittings are not exposed. Coordinate access door location with architectural features.

I. Establish elevations of buried piping outside the building to ensure a minimum of cover. Refer to details, if any, in the drawings.

J. Install valves with stems upright or horizontal, not inverted.

K. Threaded piping shall have pipe dope applied to the threads of the piping prior to assembly. The acceptable pipe dope shall be graphite or Teflon based paste (no lead solder is allowed in any part of this project) or a minimum of three layers of Teflon tape. Note that it is not acceptable to use excessive amounts of pipe dope to seal leaky pipe fittings, nor is it acceptable to use materials other than acceptable pipe dope materials to seal pipe fittings.

L. Install in accordance with Manufacturer's instructions.

M. Extend cleanouts to finished floor or wall surface. Lubricate threaded cleanout plugs with a mixture of graphite and linseed oil. Ensure clearance at cleanout for rodding of drainage system.

N. Install water hammer arrestors complete with accessible isolation valve.

O. Lead: It is forbidden that lead in any form be used in any water system other than waste. If lead is used in the fabrication or installation of any water system other than waste, then ALL of the installed equipment and material, which may have come in contact with the lead, shall be marked with bright red or orange spray paint, and shall be removed from the project site. The system(s) shall then be restored and reinstalled using ALL NEW MATERIALS.

P. Furnish and install all labor, materials, equipment, tools and services and perform all operations required in connection with or properly incidental to the installation of complete plumbing fixtures, as indicated on the Drawings, reasonably implied therefrom, or as specified herein, unless specifically excluded.

Q. Plumbing fixtures shall be supplied, set and connected as listed herein and as shown on the Drawings. Fixtures shall be protected from damage during construction, and shall be thoroughly cleaned of all tape and adhesives prior to final acceptance.

R. Coordinate special mounting heights of plumbing fixtures with architectural details of each toilet area.

S. Install each fixture with trap, easily removable for servicing and cleaning. The installation of multiple traps in-line is prohibited.

T. Install components level and plumb, except for piping requiring a slope.

U. Install and secure all fixtures in place with specified wall carriers and bolts.

V. Solidly attach floor mounted water closets to floor with lag screws. Flashing is not intended to hold fixture in place. Wall mounted water closets shall be mounted securely to carrier with long studs, washers and nuts.

W. Install ADA (mobility impaired accessible) water closets with flush valve operating handle, or pushbutton, oriented toward the latch side of the partition door, or toward the more open side of the water closet enclosure, whichever is more accessible for operation.

X. Install water heaters per Manufacturer's instructions and as detailed on drawings. Set initial temperature at 110°F.

3.4 ERECTION TOLERANCES

A. Establish invert elevations, slopes for drainage to 1/8 inch per foot (one percent) minimum for all piping systems except for waste water piping. Install waste water piping with 1/4 inch per foot (two percent) minimum gradient. Maintain gradients through each joint of pipe and throughout system. All other dimensions shall be installed within 1/4 inch, unless noted otherwise.

3.5 ALLOWABLE BENDS

A. Unless specifically allowed in the pipe Manufacturer's design criteria, deflections of the pipe will not be allowed at couplings. An allowable radius for pipe sections may be determined from the pipe Manufacturer, and shall be submitted for approval by the Owner prior to installation.

B. Bends in soft drawn copper piping shall be made using a tubing bender designed for the purpose of bending the size of pipe being installed.

3.6 DOMESTIC WATER PIPING SYSTEMS

A. All piping shall have reducing fittings used for reducing or increasing where any change in the pipe sizes occurs. No bushing of any nature shall be allowed in any piping.

B. All exposed chrome plated, polished or enameled connections from fixtures shall be installed with special care, showing no tool marks or threads at fittings, and supported where appropriate by neat racks or hangers with round head screws of same material and finish.

C. Wade Shokstop, or approved equal, sealed air chambers shall be provided in all water branches to fixtures, sized in accordance with Manufacturer's recommendations, concealed, accessible, and located so as to protect each group of plumbing fixtures. Equal products of other Manufacturers will be considered for approval.

D. The fabrication of copper pipe and fittings shall in every detail conform to the recommendations and instructions of the fitting Manufacturer. The tools used shall be the tools adapted to that specific purpose.

E. Piping to flush valves shall be firmly secured to prevent movement when operating the valves.

F. Refer to other parts of this Section for other information concerning installation of piping.

3.7 TESTING OF ALL POTABLE WATER SYSTEMS

A. All water piping systems shall be tested. In the event a piping system is to be insulated or concealed, the piping system shall be flushed and these tests shall be satisfactorily completed before any insulation is applied or the piping system is concealed. Buried piping systems shall be flushed, tested and disinfected prior to the backfill and covering of any of the piping. In the event that the trenches are backfilled prior to the witnessed (by the Owners Construction Inspector, or designate) completion of the testing, flushing and sterilization of the piping system, then the Contractor shall expose the piping and discard all backfill materials in an acceptable manner, and complete the specified procedure. The backfill of the piping trenches shall then be completed as specified.

B. The procedure of these tests shall consist of subjecting a piping system to the hydrostatic pressure listed at the end of this Section, (or 150 percent of maximum working pressure, if a working pressure is specified, whichever is less) for the period indicated in the table. During this test period, all pipe, fittings and accessories in the particular piping system which is being tested shall be carefully inspected. If leaks are detected, such leaks shall be stopped by means designated by the Owner's duly authorized representative and the hydrostatic test shall again be applied. This procedure shall be repeated until, for the entire test period, no leaks can be found while the system being tested is subjected to the pressure mentioned above. Note that the "detection of leaks" shall include a drop in test pressure of 5 pounds per square inch (a minimum of 3 percent of test pressure) or more.

C. Wherever conditions permit, each piping system shall thereafter be subjected to its normal operating pressure and temperature for a period of no less than five (5) days. During that period, it shall be carefully observed. The piping systems must demonstrate the propriety of their installation by remaining absolutely tight and without leaks during this period.

3.8 DISINFECTION OF DOMESTIC WATER PIPING SYSTEM

A. Water for flushing, testing, and disinfection of potable domestic water piping systems will be furnished by the Contractor. The Contractor shall furnish all labor, equipment, and materials necessary to complete the system disinfection procedures specified herein.

B. Prior to starting work, verify system is complete, tested, flushed and clean.

C. Ensure pH of water to be treated is between 7.4 and 7.6 by adding alkali (caustic soda or soda ash) or acid (hydrochloric).

D. Inject disinfectant (liquid chlorine conforming with U.S. Army Specification No. 4-1, calcium hypochlorite, or chlorinated lime conforming with the requirements of Federal Specification O-C-114), throughout system to obtain 50 to 80 mg/L residual Chlorine at all outlets or taps.

E. Bleed water from outlets to ensure distribution and test for disinfectant residual at a minimum of 15 percent of outlets.

F. Maintain disinfectant in system for 24 hours.

G. If final disinfectant residual tests less than 25 mg/L residual Chlorine, repeat treatment.

H. Flush disinfectant from system until the residual Chlorine is equal to that of incoming water or a maximum of 1.0 mg/L.

I. Take samples no sooner than 24 hours after flushing, from a minimum of 10 percent of outlets and from water entry, and analyze in accordance with AWWA C651.

J. The sterilization process shall be conducted as required by the Health Department of the local county, and the specifications above, and upon completion of the process, the Contractor shall contact the Health Department to test and certify the cleanliness of the water piping system. The Contractor shall pay all costs and charges, if any, incidental to this test and certification as a part of this project.

3.9 INSTALLATION OF SANITARY WASTE PIPING

A. Install in strict accordance with Manufacturer’s recommendations.

B. Lubricate cleanout plugs with mixture of graphite and linseed oil. Prior to substantial completion remove cleanout plugs, relubricate and reinstall using only enough force to ensure a leakproof joint.

C. Slope drainage lines minimum 1/4” per foot, 1/2” per foot maximum for waste lines.

D. Install exterior cleanouts at grade and set in concrete pad as detailed on drawings.

E. Flush piping clean with water after installation.

3.10 FABRICATION METHODS FOR SEWAGE AND DRAINAGE PIPE LINES

A. Complete the installation of all sewer drains and piping promptly after excavating, chasing or cutting for same has been done so as to keep the openings for such piping open as short a time as possible. No piping shall, however, be permanently closed up, furred in or covered before the testing and inspection of same by the authority(ies) having jurisdiction.

B. Waste pipes shall be sized to conform to the sizes indicated on the Drawings. Under no circumstances shall any drain line be smaller than two inches. The waste pipes from water closets shall not be smaller than four inches.

C. The drilling and tapping of soil or waste lines is prohibited.

D. Vent pipes shall be of same material as drainage piping.

E. All vent lines shall be so constructed that they cannot be used for waste or soil lines.

F. No fixture shall be double trapped.

G. All connections for wall mounted water closets and waste piping shall be made with an appropriate cast iron closet carrier and seal as recommended by the carrier Manufacturer.

3.11 TESTING SANITARY WASTE SYSTEMS

A. After the vertical lines of soil pipe, waste, and other parts of the sanitary system have been set, all outlets shall be temporarily “plugged up”, except as are required for testing as described herein. The piping shall be tested to the pressure and time listed in the table at the end of this section. The pipes shall be filled with water to a verifiable and visible level as described above and be allowed to remain so for the test period indicated in the table at the end of this section. If, end of the test period, the level of the water has been lowered by leakage, the leaks shall be found and repaired, and the water level shall again be raised to the level described, and the test repeated until, after the test period, there shall be no perceptible lowering of the water level in the system being tested.

B. Should the completion of these tests leave any reasonable doubt relative to the integrity of the installation, additional tests or measures shall be performed to demonstrate the reliability of these systems to the complete satisfaction of the Owner’s duly authorized representative. Such tests shall be conducted and completed before any joints in plumbing are concealed or made inaccessible.

C. After all testing operations have been completed, all waste and vent lines shall be flushed with clean water.

3.12 INTERFACE WITH OTHER PRODUCTS

A. Review millwork shop drawings. Confirm location and size of fixtures and openings before rough-in and installation.

3.13 ADJUSTING

A. Adjust work under provisions of Section 15050.

B. Adjust stops or valves for intended water flow rate to fixtures without splashing, noise, or overflow.

3.14 CLEANING

A. Clean work under provisions of Section 15050.

B. At completion clean plumbing fixtures and equipment.

3.15 PROTECTION OF FINISHED WORK

A. Protect finished Work under provisions of Section 15050.

B. Do not permit any use of fixtures during construction, until after Substantial Completion has been announced by Owner.

3.16 FIXTURE HEIGHTS (All heights are "above finished floor" unless noted otherwise. All heights listed shall be used, unless noted otherwise in 1) Architectural, or 2) Plumbing, Plans.)

A. Tolerances: Note that all heights listed herein are intended to allow a tolerance of ±1/2", unless a specific range is given.

B. Water-Closet
1. Standard: nominal 14 inches to top of bowl rim
2. Accessible: 17 to 19 inches to top of installed elevation of seat.

C. Urinal
1. Standard: 25 inches to bowl rim
2. Accessible: 17 inches to bowl rim, and shall project a minimum of 14 inches from wall.

D. Lavatory (All installations): 32 inches to top of basin rim.

E. Hose Bibb (All installations): 18 inches A.F.F. (above final grade, if no floor) to center of outlet of hose bibb.

3.17 FUEL GAS DISTRIBUTION SYSTEM FABRICATION METHODS

A. All interior fuel gas piping shall, wherever possible, be installed so as to grade back toward the building entrance.

B. All piping shall be securely fastened in place in such a manner as to maintain its grading. Under no circumstances shall any gas piping be used to support any weight other than its own weight.

C. The general arrangement of all fuel gas piping shall be such that the number of threaded joints involved is reduced to an absolute minimum. If obstructions are encountered, pipe shall not be bent to avoid such obstructions. Welding fittings shall be used for this purpose in the case of welded lines, and if threaded lines are involved, threaded fittings shall be used. Wherever fuel gas pipes run through outside brick, stone, or other walls, the opening around the pipe shall be securely and rigidly sealed with a resilient seal. Fuel gas pipe sizes shall be at least one pipe size larger than the inlet of the gas appliance which they supply. No bushings shall be used in the installation of the system. If pipe sizes must be changed, then only bell reducers may be used.

D. Fuel gas piping shall be thoroughly tested after installation. The procedure of these tests shall consist of subjecting a piping system to a pneumatic (air) pressure as listed in the table at the end of this section. The length of the test shall be as given in the table. During this test period, all pipe, fittings and accessories in the piping system which is being tested shall be carefully inspected with a soapy leak testing fluid. If leaks are detected, such leaks shall be stopped by means designated by the Owner's duly authorized representative and the test shall again be applied. This procedure shall be repeated until, for an entire twenty-four hour period, no leaks can be found while the system being tested is subjected to the pressure mentioned above. Note that the "detection of leaks" shall include a drop in test pressure of 5 pounds per square inch or more.

3.18 COMPRESSED AIR DISTRIBUTION SYSTEM FABRICATION METHODS

A. All interior compressed air piping shall, wherever possible, be installed so as to grade back toward the compressed air tank.

B. All air piping shall be securely fastened in place in such a manner as to maintain its grading. Under no circumstances shall any piping be used to support any weight other than its own weight.

C. The general arrangement of all air piping shall be such that the number of joints installed is reduced to an absolute minimum. If obstructions are encountered, pipe shall not be bent to avoid such obstructions. Welding fittings shall be used for this purpose in the case of welded lines, and if threaded lines are involved, screwed fittings shall be used. Wherever pipes run through exterior brick, stone, or other walls, the opening around the pipe shall be securely and rigidly sealed. No bushings shall be used in the installation of the system. If pipe sizes must be changed, then only bell reducers may be used.

D. Compressed air piping shall be thoroughly tested after installation. The procedure of these tests shall consist of subjecting a piping system to the pneumatic (air) pressure indicated in the table at the end of this Section for the test period indicated. During this test period, all pipe, fittings and accessories in the particular piping system which is being tested shall be carefully inspected. If leaks are detected, such leaks shall be stopped by means designated by the Owner's duly authorized representative and the test shall again be applied. This procedure shall be repeated until, for an entire twenty-four hour period, no leaks can be found while the system being tested is subjected to the pressure mentioned above. Note that the "detection of leaks" shall include a drop in test pressure

of 5 pounds per square inch or more. If there is a significant change in ambient temperature from the beginning to the end of the test, then this shall be considered if there is a significant drop in pressure. At the discretion of the State's representative, the test may be repeated.

E. Wherever conditions permit, the piping system shall thereafter be subjected to its normal operating pressure and temperature for a period of no less than five (5) days. During that period, it shall be carefully observed. The piping systems must demonstrate the propriety of their installation by remaining absolutely tight and without leaks during this period.

3.19 TESTING

A. All piping systems shall be tested at pressures appropriate to their service. The following test pressures and periods of test shall be used, unless noted otherwise. If lesser pressures or test periods are specified, then the pressures and periods listed below shall prevail:

Piping System	Test Pressure	Test Period
Water	100 psig	1 hour
Sanitary Sewer & Vent	10 ft of head	1 hour
Fuel Gas	10 psig	1 hour
Compressed Air	150 psig	1 hour

END OF SECTION

SECTION 15490

CLOSED LOOP WATER RECYCLING SYSTEM

PART 1 - GENERAL

1.1 SECTION INCLUDES

A. Closed Loop Water Recirculation System

B. Pressure Washer

1.2 RELATED SECTIONS

A. Section 15010 – Basic Mechanical Requirements

B. Section 15140 – Supports and Anchors

C. Section 15260 – Piping Insulation

D. Section 15400 – Plumbing Piping and Associated Materials

E. Division 16 – Electrical

1.3 REFERENCES

A. ANSI/NFPA 70 – National Electrical Code

B. ANSI B31.9 – Building Service Piping

C. ASTM A53 – Pipe, Steel, Black and Hot-Dipped Zinc Coated, Welded and Seamless

D. ASTM B32 – Solder Metal

E. ASTM B42 – Seamless Copper Pipe

F. ASTM B43 – Seamless Red Brass Pipe

G. ASTM B75 – Seamless Copper Tube

H. ASTM B88 – Seamless Copper Water Tube

I. ASTM B251 – Wrought Seamless Copper and Copper-Alloy Tube

J. ASTM B302 – Threadless Copper Pipe (TP)

K. NSF – National Sanitation Foundation

L. TCEQ – Texas Commission for Environmental Quality, Water System Regulations

M. TDH – Texas Department of Health

N. IBC – International Building Code, latest edition

O. UMC – Uniform Mechanical Code, latest edition

P. UPC – Uniform Plumbing Code, latest edition

1.4 SUBMITTALS

A. Submit under provisions of UGC and Special Conditions.

B. Product Data: Provide data on capacities, ratings, Manufacturer's recommended clearances, dimensions, and construction. Provide Manufacturers catalog information on all components and their operation and maintenance.

1.5 QUALITY ASSURANCE

A. Manufacturer's Installation Instructions: Indicate assembly and support requirements.

B. Ensure products and installation of specified products are in conformance with recommendations and requirements of the following organizations:
1. National Electrical Manufacturers' Association (NEMA)
2. National Sanitation Foundation (NSF)
3. Underwriters Laboratories (UL)

1.6 QUALIFICATIONS

A. Manufacturer: Company specializing in manufacturing the Products specified in this section with minimum three years documented experience.

B. Installer: Shall be certified and approved for marketing, installation and servicing of the system by the system Manufacturer. Documentation of this certification shall be submitted for approval.

1.7 REGULATORY REQUIREMENTS

A. Perform Work in accordance with the following: Uniform Plumbing Code, Uniform Mechanical Code, TCEQ and TDH Regulations.

1.8 DELIVERY, STORAGE, AND HANDLING

A. Deliver, store, protect and handle products to site under provisions of Section 15010.

B. Provide temporary end caps and closures on all piping and fittings. Maintain in place until installation.

1.9 WARRANTY

A. Contractor shall provide one-year warranty on all materials and workmanship.

PART 2 - PRODUCTS

2.1 WATER RECYCLING SYSTEM, GENERAL

A. Equipment capacities and options shall be as scheduled, or as specified herein, whichever is greater.

B. In some cases it may not be possible to describe in adequate detail the exact installation of a feature or equipment. In those instances, the Contractor shall solicit the guidance and direction of the Engineer, whose decision will be final.

C. The system as installed shall be complete in every respect, ready for operation at the completion of the installation.

D. System as installed shall be weather tight, capable of reliable operation without the need for a weather proof enclosure. All protection required for system components shall be included in the construction of the system.

E. Complete system shall not exceed a footprint of 24 feet by 16 feet and shall not exceed a height of 10 feet, unless a larger size is approved.

F. The system shall include the aeration of the Washbay separation pit.

2.2 WATER RECYCLING SYSTEM MANUFACTURER

A. Water Maze Water Treatment Systems

B. Approved equal

2.3 CAPACITY

A. Unit shall have the ability to process a minimum of 5 gallons of untreated water per minute, and process water with an oil content of up to 5 percent and total suspended solids (TSS) of 10,000ppm (1%).

2.4 WATER TREATMENT

A. Unit shall include an oil and grease separator, and a sediment separator. Separation may be performed in a single unit.

B. System shall include a process of adding bioremediation material to the water as a means of purifying the recirculated water. The bioremediation materials shall be intrinsically safe and shall not require special handling.

C. The system shall include the ability to aerate the water in the washbay collection pit, in addition to providing aeration for the process.

D. The final water shall be treated with ozone to reduce and eliminate the carryover of any bioremediation materials.

E. All internal and external parts shall be resistant to corrosion.

F. Separator shall have the capability to place the waste oil and grease in an owner provided 55 gallon drum.

G. Separator shall have continuous solids separation and filtration system(s).

2.5 WATER FILTRATION

A. Water submitted for reuse shall contain no greater than 50 micron particle size of solids. System may automatically purge solids to the washbay separation pit.

2.6 WATER STORAGE

A. System shall include a minimum of 500 gallons of water storage capacity to allow for surges in water flow. Storage tank shall include a drain valve and hose for draining stored water.

2.7 PUMPS

A. System shall include the ability to pump raw water from a 5 foot deep sump (indicated in the drawings).

B. System shall include all pumping capacity required by the system for supply of stored water at a pressure of 60 psig, at minimum required flow capacity.

2.8 OPERATING CONTROLS

A. The turnkey system shall include complete controls for the automatic operation of all components to operate as an integrated system. Controls shall be analog, and shall require no special programming. A control panel shall be included, and shall have the following features as a minimum:
   1. Selective switches for manual and automatic pump operation, as well as an “off” position (“H-O-A” switches).
   2. Yellow and red indicator lights for low and high level alarms for all open vessels and basins.
   3. Complete labeling with easily understood descriptions for all features.
   4. A complete schematic for operation and troubleshooting.

2.9 WATER RECYCLING SYSTEM POWER REQUIREMENTS

A. Required power shall be supplied at a single point. Power shall be 120 or 208/240 volts, AC, single phase. A single 208/240 volt, single phase AC circuit of no greater than 40

amps shall be sufficient to supply all power requirements for the system. (Note that a single 40 amp, single phase, 208/240 VAC circuit is shown on the plans. Contractor shall provide a properly sized and protected circuit(s) necessary to power the equipment provided.)

B. System shall include all NEC required electrical protection for each powered device.

2.10 PRESSURE WASHER

A. A pressure washer shall be provided under this contract. The pressure washer shall comply with the following. Unit shall be Alkota Model # 418X4, or approved equal.

B. Factory manufactured water heater and integral pressure booster.

C. Water heater heats water to a minimum of 100°F (adjustable), using diesel oil for fuel, minimum 12 gallon fuel tank.

D. Pressure booster increases water pressure, to a minimum pressure of 1800 psig. Water flow shall be minimum 4.0 gpm, with a 5.0 horsepower pump.

E. System shall include a minimum of 50 feet (unless noted otherwise on drawings) of pressure rated hose rated for an operating pressure of 3000 psig, and a trigger operated wash “wand” and atomizing pressure nozzle.

F. System shall include a chemical feeder for the precise blending of detergents.

G. Refer to equipment schedule on drawings for additional requirements, if any.

2.11 WARRANTY

A. The Contractor shall provide an unconditional one year warranty from the date of substantial completion that shall include monthly inspections, complete parts and labor for all equipment or material failures, complete supply of consumables provided on a monthly basis delivered to the site.

PART 3 - EXECUTION

3.1 INSTALLATION

A. Manufacturer trained and certified technicians shall install the system according to Manufacturers written instructions.

B. Install and connect all power and piping as required by Manufacturers written instructions.

C. As part of the requirements shown here and in the plans, Contractor shall coordinate trades to minimize interference with the installation and placement of the system. Contractor shall install the system in the location indicated on plans. If Contractor has any question concerning the installation as indicated here or in the drawings, the

Contractor shall seek the advice and guidance of the Owner's Construction Inspector and/or Engineer. The decision of the Engineer shall be final.

3.2 COMMISSIONING

A. Startup Services shall be provided to start and demonstrate units, and operate controls and safeties.

B. Test and Adjust controls and safeties, replace damaged or malfunctioning controls and equipment.

C. Correct deficiencies identified by test and observations and retest until specified requirements are met.

3.3 TRAINING

A. A Manufacturer trained and certified technician shall provide a minimum of eight (8) hours training in the operation and maintenance of the system to no less than four (4) of the Owner's personnel. Contractor shall give a minimum of one week notice when preparing to provide the training.

B. Complete descriptive training material shall be provided for each of the Owner's personnel trained. The training material shall include, as a minimum, the following:
1. A complete description of the operation of each of the system's components
2. How each component operates with the system
3. How the controls work and how to adjust each control
4. Suggested troubleshooting for expected malfunctions
5. Required maintenance
6. A complete maintenance schedule for all serviceable components
7. A complete parts list
8. Methods of repair

3.4 OPERATION AND MAINTENANCE

A. The final installation shall be complete and functional in every respect. The equipment shall perform as specified, and all features of every piece of equipment installed under this contract shall be accessible for operation and maintenance. In addition, the installation of the materials or equipment for this project shall provide access for all features for the operation and maintenance of related or adjacent equipment to the materials and equipment installed under this project. Contractor shall install all equipment and materials as specified so that all equipment is completely accessible for such maintenance and operation as changing filters, replacing motors, oiling bearings, inspecting and repairing controls, etc.

B. All necessary MSDS shall be included in all material supplied to the owner at the completion of the project, including training manuals and operation and maintenance manuals.

END OF SECTION

SECTION 15540

FUEL FIRED HEATERS

PART 1 - GENERAL

1.1 SECTION INCLUDES

A. Low Intensity Tube Infrared Heaters

B. High Intensity Ceramic Burner Infrared Heaters

C. Point of use Pressure Regulators

1.2 RELATED SECTIONS

A. Section 15050 – Basic Mechanical Requirements

B. Section 15060 – Supports and Anchors

C. Section 15400 – Plumbing Piping and Associated Materials

1.3 REFERENCES

A. AGA – American Gas Association

B. ANSI/ASHRAE 90A – Energy Conservation in New Building Design

C. NFPA 54 – National Fuel Gas Code

D. UMC – Uniform Mechanical Code, latest edition

E. UPC – Uniform Plumbing Code, latest edition

1.4 SUBMITTALS

A. Submit under provisions of Uniform General Conditions, Special General Conditions, and Section 15050.

B. Product Data: Provide data on infrared heaters, input ratings, Manufacturer's recommended clearances, dimensions, tube size and construction. Provide Manufacturers catalog information on indoor and outdoor thermostats, connections to emitter tubes for single and double venting combustible product as well as combustible air.

1.5 QUALITY ASSURANCE

A. Radiant Heaters: Manufacturer's name, American Gas Association label, and input rating clearly shown on burner housing.

B. Thermostats: Manufacturer's name and the (UL) label and NEMA classification clearly shown on thermostats and radiant heaters.

C. Manufacturer's Installation Instructions: Indicate assembly and support requirements.

D. Ensure products and installation of specified products are in conformance with recommendations and requirements of the following organizations:
1. National Electrical Manufacturers' Association (NEMA)
2. Underwriters Laboratories (UL)
3. AGA – American Gas Association
4. ANSI B31.2 – Fuel Gas Piping Code
5. ANSI Z83.6 – Gas-Fired Infrared Heaters

1.6 QUALIFICATIONS

A. Manufacturer: Company specializing in manufacturing the Products specified in this section with minimum three years documented experience.

1.7 REGULATORY REQUIREMENTS

A. Perform Work in accordance with the following: Uniform Plumbing Code, Uniform Mechanical Code, National Fuel Gas Code (NFPA-54), TNRCC and TDH Regulations.

1.8 DELIVERY, STORAGE, AND HANDLING

A. Deliver, store, protect and handle products to site under provisions of Section 15050.

B. Accept valves on site in shipping containers with labeling in place. Inspect for damage.

C. Provide temporary end caps and closures on piping and fittings. Maintain in place until installation.

D. Protect the emitter tubes and the ceramic burners from entry of foreign materials by use of temporary covers, completing sections of the work, and isolating parts of completed system.

1.9 WARRANTY

A. Contractor shall provide one-year warranty on all materials and workmanship, a Manufacturer five-year warranty on tube heater’s combustion and radiant emitter tube assembly and a 10-year warranty on the ceramic burners.

PART 2 - PRODUCTS

2.1 GENERAL

A. Equipment capacities and options shall be as scheduled, or as specified herein, whichever is greater.

B. In some cases it may not be possible to describe in adequate detail the exact installation of a feature or equipment. In those instances, the Contractor shall solicit the guidance and direction of the Owners Construction Inspector, whose decision will be final.

2.2 MANUFACTURER (Note: all low and high intensity infrared heaters, thermostats, dual exhaust assemblies and elbow 90° bends shall be products of the same Manufacturer):

A. Re-verber-ray, Model DX and DR Series heaters as indicated in drawings

B. Ray-Tec

C. Approved equal

2.3 GAS-FIRED TUBULAR INFRARED HEATERS

A. Comply with ANSI Z83.6, “Gas-Fired Infrared Heaters”.

B. Certified label by American Gas Association.

C. Certified label by Underwriters' Laboratories.

D. Designed and built to burn liquid propane gas with characteristics same as those of gas available at Project site.

E. Factory assembled, piped, wired, and tested for 120 VAC.

F. Stainless steel or aluminized steel with high-emissivity, high-temperature, corrosion-resistant external finish.

G. Heater shall be equipped with a direct silicon carbide ignition system, two safety differential pressure switches, pre-purge feature before initiating burner operation and a burner sight glass visible from the floor of the occupied space.

H. Reflectors shall be polished stainless steel or aluminum, with reflector end caps, capable of rotating from 0 to 45 degrees when required.

I. As indicated in plans install a dual exhaust assembly “Y” shaped aluminized steel with high temperature coating connecting to a 6 inch Type “B” vent with both heaters on a common thermostat.

2.4 OPERATING CONTROLS (“Thermostat”)

A. External thermostats shown in schedule.

PART 3 - EXECUTION

3.1 INSTALLATION

A. Install heaters according to Manufacturer’s written instructions.

B. Install and connect gas-fired heaters and associated fuel and vent features and systems, installed and connected according to NFPA-54, applicable local codes and regulations, and Manufacturer's printed installation instructions.

C. Where indicated in plans install a dual exhaust assembly "Y" shaped aluminized steel with high temperature coating connecting to a 6 inch Type "B" vent, heaters shall be controlled with a common thermostat.

D. All tube heaters shall have an outside combustible air intake vent (PVC 4-inch vent). Provide insect screen on inlet.

E. As part of the requirements shown here and in the plans, Contractor will be required to coordinate trades to minimize interference with the installation and placement of the radiant heaters. Contractor is required to install the radiant heaters where indicated on plans. If Contractor feels the placement of the radiant heaters is not achievable due to interference, combustible clearances, safety issues or possible hazards, he or she shall seek advice and guidance through the Owner's Construction Inspector and/or Engineer whose decision shall be final.

3.2 ADJUSTING AND CLEANING

A. Adjust natural gas pressure reducing regulators for optimum pressure requirements as recommended by Manufacturer. Contractor is required to adjust building pressure regulator to deliver proper pressure to the point of use regulators that shall be installed for each and every radiant heater, as recommended by Manufacturer.

B. Adjust burner and other unit components for optimum heating and performance and efficiency. Adjust heat distribution features, including reflectors, to provide optimum heat distribution for objects, personnel, and spaces served.

C. After completing system installation, inspect heaters and associated components. Repair scratches and mars of finish to match original finish. Clean unit internally using methods and materials recommended by Manufacturer.

3.3 COMMISSIONING

A. Startup Services shall be provided to start and demonstrate units, and operate controls and safeties.

B. Test and Adjust controls and safeties, replace damaged or malfunctioning controls and equipment.

C. Correct deficiencies identified by test and observations and retest until specified requirements are met.

3.4 OPERATION AND MAINTENANCE

A. The final installation shall be complete and functional in every respect. The equipment shall perform as specified, and all features of every piece of equipment installed under this contract shall be accessible for operation and maintenance. In addition, the

installation of the materials or equipment for this project shall provide access for all features for the operation and maintenance of related or adjacent equipment to the materials and equipment installed under this project. Contractor shall install all equipment and materials as specified so that all equipment is completely accessible for such maintenance and operation as changing blower motors, oiling fans, inspecting and repairing controls, etc.

END OF SECTION

SECTION 15761

DUCTLESS AIR CONDITIONING SYSTEMS

PART 1 - GENERAL

1.1 SECTION INCLUDES

A. Outside unit

B. Refrigerant piping and insulation

C. Condensate piping and insulation

D. Controls

E. Condensate drain

1.2 SCOPE

A. The Contractor shall install a wall mounted ductless air conditioning unit (cooling only) and all appurtenances complete in every respect, as specified herein. The completed installation shall be fully functional and comply with all state, federal and local codes, standards and regulations.

1.3 RELATED SECTIONS

A. Section 15050 – Basic Mechanical Requirements

1.4 REFERENCES: In addition to state and local ordinances, standards and codes published by the following shall govern the quality of the construction applicable:

A. ASHRAE – American Society of Heating, Refrigeration and Airconditioning Engineers

B. ARI – American Refrigeration Institute

C. SMACNA – Sheet Metal and Airconditioning Contractors National Association

D. NEC – National Electrical Code (NFPA 70)

1.5 SUBMITTALS

A. Submit under provisions of the Uniform General Conditions and Special Conditions, and Section 15050.

B. Product Data: Submittal(s) shall include Manufacturers data on all equipment and materials, including air conditioner equipment (including rated capacities, electrical characteristics and connection requirements), piping (refrigerant and drain piping) insulation, and thermostat.

C. Submit credentials of Contractor and responsible on-the-job employees.

D. Submit Manufacturer's Installation Instructions.

1.6 QUALITY ASSURANCE

A. Perform Work in accordance with ANSI/ASHRAE 15.

B. Install equipment in accordance with ASHRAE and SMACNA Standards, and Manufacturers recommendations.

C. All mechanical work shall be performed by, or under the direct supervision of, a locally licensed mechanical contractor with a minimum of five years of documentable experience in the installation and repair of similar equipment to that described for this project.

1.7 WARRANTY

A. Provide one year warranty on all materials and workmanship, and Manufacturers five year warranty on air conditioning compressor.

PART 2 - PRODUCTS

2.1 GENERAL

A. Equipment capacities and efficiencies shall be as scheduled, or as specified herein, whichever is greater.

B. In some cases it may not be possible to describe in adequate detail the exact installation of a feature or equipment. In those instances, the Contractor shall solicit the guidance and direction of the Owners Construction Inspector, whose decision will be final.

2.2 MANUFACTURER (Note that both the inside and outside units shall be products of the same Manufacturer.)

A. Friedrich

B. Mitsubishi

C. Sanyo

D. Approved equal

2.3 OUTSIDE UNIT

A. Self contained factory built outdoor package containing compressor, refrigerant drier, reversing valve, condenser coil and condenser fan.

B. Compressor: hermetic, 3600 rpm maximum, resiliently mounted integral with condenser securely bolted in place, with positive lubrication, crankcase heater, high pressure

control, motor overload protection, service valves and drier. Scroll compressors are preferred, but not required.

C. Air Cooled Condenser: copper tube and aluminum fin coil, with direct drive axial propeller fan resiliently mounted, galvanized fan guard.

D. Cooling Capacity: Rated cooling output as scheduled in the drawings.

E. Installation: The units shall be installed on a concrete equipment pad with a resilient pad at each corner of the unit, plus a resilient pad at the mid point of units longer than 4 feet. Each resilient pad shall be a 4" square ribbed neoprene sandwiching a layer of cork. The pad shall be constructed of a 1/2" layer of cork laminated between 1/4" layers of ribbed neoprene. The equipment platform shall be provided of such size that the pad shall be a minimum of 12 (twelve) inches larger than the unit on all sides, with 36 inches between units. Refer to detail(s) on drawing.

2.4 REFRIGERATION PACKAGE

A. Refrigerant Line Set: Sized as recommended by Manufacturer. Insulation shall be installed on both refrigerant lines **prior** to installation. Install 1/2" thickness Armaflex (or approved equal), and paint insulation with two coats of exterior latex where insulation is exposed to sunlight.

2.5 INDOOR UNIT

A. Configuration: Electric refrigeration indoor coil and integral filter section with replaceable "throw-away" filter.

B. Units: Self-contained, units, factory assembled, pre-wired unit consisting of cabinet, supply fan, integral circuit breaker, controls, air filter, and inside coil. Cabinet shall be constructed with a high impact resistant plastic concealing all tubing and wiring. Cabinet panels shall be removable for complete access to all serviceable components.

C. Air Handling: Fan shall be capable of moving required air quantities required with a dirty filter in place. Provide belt driven blower(s) with heavy duty, self aligning, permanently sealed and lubricated bearings. All moving parts shall be resiliently mounted on a rugged frame, and isolated from the rest of the cabinet. Adjustable motor pulley shall provide variable speed adjustment.

D. Indoor Unit Inside Coil: Copper tube aluminum fin assembly, with drain pan, drain connection, refrigerant piping connections and factory installed thermostatic expansion valve.

E. Controls: Each unit shall be furnished with a complete and working system of controls, contactors, relays, control power transformer, and terminal block.

F. The unit shall be supplied with a factory manufactured return grille, mounted directly to the unit, for a "non-ducted" air return. The return grille shall not interfere with the removal and replacement of filters.

2.6 CONDENSATE DRAIN

A. Condensate piping shall be hard drawn Type K copper, installed with a minimum of 1/8 inch per foot slope, shall have a minimum 4 inch deep P-trap, and shall be completely insulated with 1/2" wall Armaflex closed cell piping insulation, or approved equal. All turns in the piping system shall be accomplished using long sweep bends. Short radius 90's shall not be used.

2.7 SECONDARY DRAIN

A. If the equipment is supplied with a secondary drain connection, piping shall be hard drawn Type K copper, installed with a minimum of 1/8 inch per foot slope, installed without a "P-trap", and connected to the primary condensate drain ahead ("upstream") of the primary drain P-trap.

2.8 OPERATING CONTROLS ("Thermostat")

A. Programmable low voltage (24 volt DC) thermostat with subbase, cycle's indoor and outdoor unit to maintain room temperature setting. Thermostat shall be equipped with a subbase with an "off-cool" switch, where the "off" setting shall disable the system. The "cool" setting shall cycle the outdoor unit on and off to maintain the room temperature setting. Thermostat subbase shall also be equipped with a "FAN: On - Auto" switch which in the "auto" position, shall cause the fan to operate automatically with the cooling cycles, and in the "on" position, the fan shall be "on" at all times. The thermostat shall be capable of controlling the room temperature within 2 degrees of set point. Programmability shall include four daily set points or two each of "occupied" and "unoccupied" periods per day. Weekdays shall be programmed separate from weekend days, but not necessarily individually. Thermostat shall be manufactured by unit Manufacturer, unless noted otherwise. Operating manuals shall be supplied with each thermostat.

B. Remotely operated temperature controls are acceptable as an alternative, and shall be submitted for approval by the engineer.

PART 3 - EXECUTION

3.1 GENERAL

A. When removing refrigerant for any reason, Contractor shall capture refrigerant with a compressor package designed and manufactured for that purpose, and dispose of the refrigerant to a certified refrigerant recycling facility. Under no circumstances shall refrigerant be released directly to the atmosphere. All refrigerants shall be handled and stored as required by current federal, state and local standards, recommendations, regulations, ordinances, and laws.

B. Contractor shall install refrigerant piping, and charge unit. Charging unit consists of drawing a complete vacuum on the refrigerant containing system, including piping, and charging with new refrigerant. Care shall be taken in the installation of refrigerant to

eliminate the discharge of refrigerant to the atmosphere. System shall be run and pressures checked to assure that system is properly charged.

C. The finished cooling system shall operate as specified and according to the standards, guidelines and regulations referenced.

D. Electrical installation, connection of equipment to electrical supplies and installation of wiring and conduit shall conform to NEC standards, recommendations and requirements, and to the electrical drawings.

3.2 OPERATION AND MAINTENANCE

A. The final installation shall be complete and functional in every respect. The equipment shall perform as specified, and all features of every piece of equipment installed under this contract shall be accessible for operation and maintenance. In addition, the installation of the materials or equipment for this project shall provide access for all features for the operation and maintenance of related or adjacent equipment to the materials and equipment installed under this project. Contractor shall install all equipment and materials as specified so that all equipment is completely accessible for such maintenance and operation as changing filters, operating disconnect switches or breakers, inspecting and repairing controls, cleaning coils, etc.

END OF SECTION

SECTION 15767

HEAT PUMP AIR CONDITIONING SYSTEMS

PART 1 - GENERAL

1.1 SECTION INCLUDES

A. Air Handler Indoor units

B. Heat pump outside units

C. Controls

1.2 SCOPE

A. The Contractor shall install heat pump systems with electric auxiliary heat and all appurtenances complete in every respect, as specified herein. The completed installations shall be fully functional and comply with all state, federal and local codes, standards and regulations.

1.3 RELATED SECTIONS

A. Section 15050 – Basic Mechanical Requirements

B. Section 15097 – Duct Insulation

C. Section 15810 – Ductwork

D. Section 15820 – Ductwork Accessories

1.4 REFERENCES - In addition to state and local ordinances, standards and codes published by the following shall govern the quality of the construction applicable:

A. ASHRAE – American Society of Heating, Refrigeration and Airconditioning Engineers

B. ARI – American Refrigeration Institute

C. SMACNA – Sheet Metal and Airconditioning Contractors National Association

D. NEC – National Electrical Code (NFPA 70)

E. UMC – Uniform Mechanical Code, latest edition

F. UPC – Uniform Plumbing Code, latest edition

1.5 SUBMITTALS

A. Submittal must follow the provisions of the Uniform General Conditions and Special Conditions, and Section 15050 of these specifications.

B. Product Data: Provide Manufacturers data on all equipment and materials, including all indoor and outdoor units.

C. Provide complete Manufacturer's Installation Instructions.

1.6 QUALITY ASSURANCE

A. Perform Work in accordance with ANSI/ASHRAE 15.

B. All mechanical work shall be performed by, or under the direct supervision of, a locally licensed mechanical contractor with a TDLR Class "A" Installer's License, and a minimum of five years of documentable experience in the installation and repair of similar equipment to that described for this project.

C. No asbestos-bearing, or solvent based, or lead containing materials shall be used on this project. If any prohibited materials are installed, all of the material, including the underlying material, shall be removed and disposed of as required by local, state, and federal requirements.

1.7 WARRANTY

A. Provide one-year warranty on all materials and workmanship, and Manufacturer's five-year warranty on air conditioning compressors.

PART 2 - PRODUCTS

2.1 GENERAL

A. Equipment capacities and efficiencies shall be as scheduled, or as specified herein, whichever is greater.

B. In some cases it may not be possible to describe in adequate detail the exact installation of a feature or equipment. In those instances, the Contractor shall solicit the guidance and direction of the Owners Construction Inspector, whose decision will be final.

2.2 HEAT PUMP and AIR HANDLER MANUFACTURER (Note that both the inside and outside units shall be products of the same Manufacturer.)

A. Trane

B. Carrier

C. Lennox

D. Approved equal

2.3 OUTSIDE UNIT

A. Self contained factory built outdoor package containing compressor, refrigerant drier, reversing valve, condenser coil and condenser fan.

B. Compressor: hermetic, 3600 rpm maximum, resiliently mounted integral with condenser securely bolted in place, with positive lubrication, crankcase heater, high pressure control, motor overload protection, service valves and drier. Scroll compressors are preferred, but not required.

C. Air Cooled Condenser: copper tube and aluminum fin coil, with direct drive axial propeller fan resiliently mounted, galvanized fan guard.

D. Cooling Capacity: Rated cooling output as scheduled in the drawings in accordance to A.R.I. Standard 210/240 Rating Conditions.

E. Unit shall include low ambient controls for operation at ambient conditions down to 20°F.

F. Installation: The units shall be installed on a poured-in-place concrete equipment pad with a resilient pad at each corner of the unit, plus a similar resilient pad at the mid point of units longer than 4 feet. Each resilient pad shall be 4" square. The pads shall be constructed of a 1/2" layer of cork laminated between 1/4" layers of ribbed neoprene. The equipment platform shall be provided of such size that the pad shall be a minimum of 6 (six) inches larger than the unit on all sides, with a minimum of 48 inches between units. Refer to detail(s) on drawing. In the event of a conflict, the greater quantity, quality, and distances shall prevail.

2.4 INDOOR UNIT

A. Configuration: Horizontal type with electric heating, electric refrigeration heat pump coil, and integral filter section with replaceable "throw-away" filter. There shall be a single point electrical connection on each indoor unit/furnace.

B. Units: Self-contained, factory assembled, pre-wired unit consisting of cabinet, supply fan, electric heating unit, integral circuit breaker, controls, air filter, and heat pump inside coil. Cabinet shall be constructed of heavy gauge galvanized steel, completely lined with thick fiberglass insulation. Cabinet panels shall be removable for complete access to all serviceable components.

C. Heating Elements: Helix wound nichrome bare heating elements, directly exposed in the air stream.

D. Air Handling: Fan shall be capable of moving required air quantities required by both heating and cooling modes, with ductwork as designed connected to the equipment, and dirty filter in place. Provide belt driven blower(s) with heavy duty, self aligning, permanently sealed and lubricated bearings. All moving parts shall be resiliently mounted on a rugged frame, and isolated from the rest of the cabinet.

E. Heat Pump Inside Coil: Copper tube aluminum fin assembly, galvanized drain pan, drain connection, refrigerant piping connections and factory installed thermostatic expansion valve.

F. Controls: Thermal sequencer relay brings the heating elements on and off line, in sequence and equal increments, with a time delay between each element. Sequencer also initiates and terminates blower operation. Heaters shall be factory assembled with controls installed and completely prewired for plug-in field power connection. Fixed stop at maximum permissible setting, will de-energize electric heat on excessive temperature and re-energize when temperature drops to lower safe value. Each unit shall be furnished with a complete and working system of controls, contactors, relays, control power transformer, and terminal block.

2.5 REFRIGERATION PACKAGE

A. Refrigerant Line Set: Sized as recommended by Manufacturer. Insulation shall be installed on each refrigerant line (both liquid and suction) prior to installation. Install 1/2" thickness Armaflex (or approved equal), and paint insulation with two coats of exterior grade latex where insulation is exposed to sunlight.

2.6 CONDENSATE DRAIN

A. Condensate drain piping shall be connected to the equipment and shall be hard drawn Type "K" copper. The complete condensate drain piping shall have a P-trap, and insulation consisting of 1/2" wall Armaflex, or approved equal. The P-trap shall have a wetted depth of a minimum of 3 inches. The drain at the unit shall be vented downstream of the P-Trap. Connect condensate drains to the drainage system. Condensate drain shall have a minimum of a 1" (one inch) gap above the sanitary sewer piping.

B. Horizontally installed units shall be provided with a drain pan, configured to capture all condensate overflows from the unit. Pan shall be fitted with a float switch to sense when the pan is half full, and shall be wired into the controls to disable the unit.

2.7 SECONDARY DRAIN

A. If the unit has a connection for a secondary or "overflow" drain, then the drain shall be connected to the primary drain. Drain piping shall be constructed with the same materials as the primary drain, installed with a minimum of 1/8 inch per foot slope, installed without a "P-trap," and connected to the primary condensate drain ahead ("upstream") of the primary drain P-trap.

2.8 OPERATING CONTROLS ("Thermostat")

A. Programmable Room Thermostat: Low voltage (24 volt AC) programmable thermostat cycles heat pump and furnace to maintain room temperature setting. Thermostat shall be rated for 2 stage cooling and 3 stages of heating. Thermostat shall also be equipped with a "FAN: On – Auto" switch which in the "auto" position, shall cause the fan to operate automatically with the heating and cooling cycles, and in the "on" position, the fan shall be "on" at all times. The thermostat shall be capable of controlling the room temperature

within 2 degrees of setpoint, except that in the second stage of heating, the temperature shall be maintained within 3 degrees of setpoint. The thermostat shall be capable of 4 settings per day, with each day of the week capable of individual programming. The thermostat shall automatically switch between heating and cooling, depending solely on whether the temperature in the building is above or below the programmed setpoint or "deadband" range. Thermostat shall be as manufactured by Johnson Controls Model #T500 HPP-1 or approved equal. An operating manual shall be supplied with each thermostat.

B. The "cool" setting shall enable the heat pump reversing valve in cooling mode and cycle the heat pump unit on and off to maintain the room temperature setting.

C. The "heat" setting shall enable the heat pump reversing valve in heating mode and cycle the heat pump on and off to maintain the room temperature setting.

D. A second stage of heating shall cycle furnace electric heat on and off if the heat pump is unable to satisfy heating demand.

PART 3 - EXECUTION

3.1 GENERAL

A. If refrigerant must be removed for any reason, Contractor shall capture refrigerant with a compressor package designed and manufactured for that purpose, and dispose of the refrigerant to a certified refrigerant recycling facility. Under no circumstances shall refrigerant be intentionally released directly to the atmosphere. All refrigerants shall be handled and stored as required by current federal, state and local standards, regulations and/or laws.

B. The installation of the complete system includes penetrations and modifications to the existing building.

C. The completed central heating and cooling system shall operate as specified and according to the standards, guidelines and regulations referenced.

D. Restore all damaged construction to an "as found" condition.

3.2 AIR CONDITIONER/FURNACE INSTALLATION

A. Install new air handlers, inside coils, drain piping, thermostats, outside units, refrigerant piping, and vapor and drain line insulation as specified. Connect equipment to ductwork and electrical supplies as necessary for a complete installation.

B. Install the air handlers in a manner to maximize the accessibility to the unit for maintenance, providing Manufacturer recommended clearances. The installation shall not limit or restrict access to the filter, nor to the unit controls. In the event that the installation is found to restrict access to features requiring regular or occasional maintenance, the Contractor shall correct the installation of the equipment to comply with the requirements of this specification.

C. Contractor shall install refrigerant piping, and charge unit. Charging unit consists of drawing a complete vacuum on the refrigerant containing system, including piping, and charging with new refrigerant. Care shall be taken in the installation of refrigerant to eliminate the discharge of refrigerant to the atmosphere. System shall be run and pressures checked to assure that system is properly charged.

D. The finished central heating and cooling system shall operate as specified and according to the standards, guidelines and regulations referenced.

3.3 OUTSIDE UNITS

A. Install outside units in locations indicated in Site Plan, and as recommended by Manufacturer. All recommended clearances shall be observed in the installation. Note that each unit shall be mounted on resilient vibration damping material, supported at all four corners.

3.4 THERMOSTAT INSTALLATION

A. Thermostats shall be mounted in the approximate location indicated in the drawings. Install each thermostat with a clear, locking, vandal proof guard. Provide operational manuals for thermostats as a part of the Manuals required for the closeout of the contract. The number of manuals provided shall equal the number of thermostats installed.

3.5 OPERATION AND MAINTENANCE

A. The final installation shall be complete and functional in every respect. The equipment shall perform as specified, and all features of every piece of equipment installed under this contract shall be accessible for operation and maintenance. In addition, the installation of the materials or equipment for this project shall provide access for all features for the operation and maintenance of related or adjacent equipment to the materials and equipment installed under this project. Contractor shall install all equipment and materials as specified so that all equipment is completely accessible for such maintenance and operation as changing filters, operating disconnect switches or breakers, inspecting and repairing controls, cleaning coils, etc.

END OF SECTION

SECTION 15810

DUCTWORK

PART 1 - GENERAL

1.1 WORK INCLUDES

A. Single wall rectangular duct

B. Flexible metal duct

C. Double wall spiral insulated round duct

1.2 RELATED WORK

A. Submit under provisions of Uniform General Conditions, Special Conditions, and Section 15050.

B. Section 15050 – Basic Mechanical Requirements

C. Section 15060 – Supports and Anchors

D. Section 15097 – Ductwork Insulation

1.3 REFERENCES

A. ASHRAE – Handbook of Fundamentals; Duct Design

B. ASHRAE – Handbook of Equipment; Duct Construction

C. ASTM A 90 – Weight of Coating on Zinc-Coated (Galvanized) Iron or Steel Articles

D. ASTM A 525 – General Requirements for Steel Sheet, Zinc-Coated (Galvanized) by the Hot-Dip Process

E. ASTM A 527 – Steel Sheet, Zinc-Coated (Galvanized) by Hot-Dip Process, Lock Forming Quality

F. NFPA 90A – Installation of Air Conditioning and Ventilating Systems

G. SMACNA – HVAC Duct Construction Standards

H. UL 181 – Factory-Made Air Ducts and Connectors

1.4 REFERENCES

A. Fundamentals Handbook, American Society of Heating, Refrigerating, and Air Conditioning Engineers (ASHRAE)

B. Equipment Handbook, ASHRAE

C. HVAC Duct Construction Standards, 1995, Sheet Metal and Air Conditioning Contractors National Association (SMACNA)

D. HVAC Duct System Design, 1990, SMACNA

E. Engineering Report No. 132 (Spacing of Duct Hangers), UMC

1.5 DEFINITIONS

A. Duct Sizes: Duct sizes indicated in the drawings or specifications are inside clear dimensions.

1.6 REGULATORY REQUIREMENTS

A. Construct ductwork to NFPA 90A, NFPA 90B and NFPA 96 standards.

B. All duct materials must be UL 181, Class 1 listed.

1.7 SUBMITTALS

A. Submit on double wall spiral insulated round duct, including fittings, hangers, insulation, and shop drawings. All submittal material shall be clearly marked.

PART 2 - PRODUCTS

2.1 DUCTWORK GENERAL

A. All ductwork indicated on the Drawings, specified or required for the air conditioning and ventilating systems shall be of materials as hereinafter specified unless indicated otherwise. All air distribution ductwork shall be fabricated, erected, supported, etc., as a minimum, in accordance with all applicable standards of SMACNA Duct Manuals where such standards do not conflict with NFPA 90A and where class of construction equals or exceeds that noted herein. Some aspects of this specification will exceed SMACNA and NFPA standards. All exhaust ductwork including toilet room exhausts shall be constructed as specified for a 2" W.G. System as described in SMACNA HVAC Duct Construction Standards unless a higher pressure requirement is noted on the drawings.

B. All ductwork shown on the Drawings, specified or required for the heating, ventilating and air conditioning systems shall be constructed and erected in a first class manner; level, vertical and parallel to building lines. The work shall be guaranteed for a period of

one (1) year from and after the date of acceptance of the job against noise, chatter, whistling, vibration, and free from pulsation under all conditions of operation. After the system is in operation, should these defects occur, they shall be corrected as directed by the Engineer.

2.2 SINGLE WALL RECTANGULAR DUCT

A. The minimum thickness of sheet metal used for ductwork construction shall be 24 gauge. Note that this does not refer to ductwork reinforcing materials. **This requirement is primary.**

B. Unless noted otherwise, fabricate low pressure metal duct from galvanized steel sheet having a zinc coating of 1.25 oz per sq ft for each side in accordance with ASTM A90 and conforming to ASTM A653 and A924 Standards. For rectangular ducts utilize drive slip or hemmed "S" slip joints. For round duct use crimp and bead joints.

C. All ductwork shown in the drawings is considered low pressure ductwork and as a minimum shall conform to the requirements for a 2" W.G. System as described in SMACNA HVAC Duct Construction Standards, Second Edition, published in 1995, with addenda, unless a higher pressure requirement is noted on the drawings.

D. In all rectangular supply, return and exhaust ducts, and all other ducts noted on the drawings, changes of direction shall be made using turns of 45° or less, or 90°. No other angle of turn is allowed. All rectangular, non-radius elbows of 90º shall have turning vanes as detailed in Specification Section 15820 – Ductwork Accessories. Duct turns greater than 90º are not allowed. Elbows of 90° may be radius type, having a centerline radius of 1-1/2 times the duct diameter or width. Elbows in round ducts may be smooth radius as described above or 4-piece 90 degree elbows or 3-piece 45 degree elbows.

2.3 FLEXIBLE METAL DUCT

A. Flexible duct ("flex duct"), if used, shall be flexible metal duct and shall be Flexmaster Type TL-V, or approved equal. Flex duct shall be constructed internally of aluminum metal flexible ducting, factory insulated with fiberglass blanket to an R=8.0, and protected with a fire retardant polyethylene outer jacket and vapor barrier. Maximum thermal conductance shall be 0.23 or less. The aluminum duct shall be secured and sealed to the adjoining sheet metal duct using sheet metal screws and duct sealant. All materials shall be installed as recommended by Manufacturer. The material, as installed, shall be limited to a maximum flame and smoke spread rating of 25/50. Flex duct shall be rated at a minimum of 12" w.g. positive pressure, and 8" w.g. negative pressure, without deformation or collapse.

B. Flex duct runs are limited to 5 feet in length unless noted otherwise on the drawings. Minimum flex duct size is 8" nominal.

C. If flexible metal duct is connecting to double wall spiral insulated round duct a insulation stop fitting shall be installed to transition from double wall to single wall.

D. Install per Manufacturer recommendations mechanically securing the connection to the duct and diffuser by installing sheet metal screws. Screws around the circumference of the duct, use at least three #8 sheet metal screws. If larger than 12” use at least five #8 sheet metal screws.

E. Apply duct sealant around the perimeter of the duct section joint and all sheet metal screws at all joints.

F. Allow at least 48 hours for sealant to cure before pressure testing for leaks

G. Secure insulation joints using staples, tape with 4" wide fiberglass tape embedded in Foster 30-35 white vapor barrier Emulsion and covered with Foster 30-35 white vapor barrier Emulsion until the tape is completely covered. If the project is an existing building retrofit project contractor shall seal insulation joints with foil backed tape with woven string stapled in at least two places per side, in lieu of fiberglass fabricated cloth with mastic.

2.4 DOUBLE WALL SPIRAL INSULATED ROUND DUCT

A. McGill Airflow L.L.C. factory manufactured double wall galvanized solid sheet metal with spiral lock seam construction interlocking helical seam that runs the length of the duct’s outer pressure shell, "acousti-k27" with a galvanized 28 gauge sheet metal perforated inner liner with a 1” layer of insulation sandwiched between with a maximum thermal conductance of 0.27 Btu/hr/SQFT/°F., or approved equal. Pressure classification for ductwork is +4 inches of water column. Galvanized steel sheet having a zinc coating of 1.25 oz per sq ft in accordance with ASTM A90 and conforming to ASTM A653 and A924 Standards.

B. All ductwork with an outer shell dimension 24” and larger shall have a McGill Airflow Uniflange, Butyl rubber gasketing connections with starter holes for sheet metal fasteners. All ductwork smaller than 24” shall be connected with a designed double wall slip coupling and/or fitting collar with extended inner collars. Insulation shall be mated at every connection.

C. All ductwork shown in the drawings shall conform to the requirements for 4” W.G. System as described in SMACNA HVAC Duct Construction Standards unless a higher pressure requirement is noted on the drawings.

D. All transitions from double wall to single wall shall consist of a transition fitting with a insulation stop.

E. The metal gauges listed in the 1995 SMACNA HVAC Duct Construction Standards for a 4” W.G. System are the minimum which shall be used for this project, see table below. It shall be noted that the Contractor is responsible that the metal gauge selected is heavy enough to withstand the physical abuse of the installation.

Max. Dia. Outer shell Duct Size	Spiral Seam Duct. US Standard Gauge	Fittings US Standard Gauge
Up to 12”	28	26
14”- 16”	26	24
18”	24	24
19” – 26”	24	22
27” – 36”	22	20

PART 3 - EXECUTION

3.1 INSTALLATION FOR SINGLE WALL RECTANGULAR DUCT

A. Refer also to requirements included in Part 2 of this specification.

B. Locate ducts with sufficient space around equipment to allow normal operating and maintenance activities.

C. Joints in round ducts shall be crimp and bead type with a minimum of three sheet metal screws and no more than 15” between screws. Joints in sectional elbows shall be sealed as specified for duct sealing.

3.2 INSTALLATION FOR DOUBLE WALL SPIRAL INSULATED ROUND DUCT

A. Slip-Joint Connection Procedure
1. Install per Manufacturer recommendations mechanically securing the connection by installing sheet metal screws through the outer shell of the duct size part of the connection, ½” from the stop bead. Screws shall be spaced no more than 15 inches apart around the circumference of the duct , use at least three screws for ducts 14 inches and smaller.
2. Apply duct sealant around the perimeter of the outer pressure shell of the exposed section joint and all sheet metal screws at all joints.
3. Allow at least 48 hours for sealant to cure before pressure testing for leaks.

B. Flanged-joint connection procedure
1. Install per Manufacturer recommendations using a #10 self tapping sheet metal screws on 10 in. on center.
2. Apply duct sealant around the perimeter of the outer pressure shell and flange covering all sheet metal screws. The butyl gasket material makes the joint seal.
3. Allow at least 48 hours for sealant to cure before pressure testing for leaks.

3.3 DUCT SUPPORTS FOR SINGLE WALL RECTANGULAR DUCT

A. As a minimum, all horizontal ducts shall be supported by means of 1" x No. 18 U.S. gauge galvanized steel band hangers attached to the ducts by means of screws, rivets, or clamps and fastened to roof and/or ceiling structural members with toggle bolts, beam clamps or other approved means. **Supports SHALL NOT be attached to underside of roof deck.** Ducts also may be supported by 3/8" threaded galvanized rod with galvanized Unistrut type channel in a trapeze configuration. Duct shall have at least one pair of supports at 8'-0" on centers. Clamps shall be used to fasten hangers to reinforcing on sealed ducts. Perforated strap material ("Plumber's Tape") shall not be used to support ducts. Brace all ductwork and equipment to prevent lateral movement under operation.

3.4 DUCT SUPPORTS FOR DOUBLE WALL SPIRAL INSULATED ROUND DUCT

A. As a minimum, all horizontal ducts shall be supported by means of 1" x No. 18 U.S. gauge galvanized steel band hanger on slip joint fittings and single- strap hanger or double-strap hanger on Van Stone Connections attached to the ducts by means of screws, rivets, or clamps and fastened to roof and/or ceiling structural members with toggle bolts, beam clamps or other approved means. **Supports SHALL NOT be attached to underside of roof deck.** . Duct shall have at least one pair of supports at 12'-0" on centers. Clamps shall be used to fasten hangers to reinforcing on sealed ducts. Perforated strap material ("Plumber's Tape") shall not be used to support ducts. Brace all ductwork and equipment to prevent lateral movement under operation.

3.5 DUCT SEALING FOR SINGLE WALL RECTANGULAR DUCT

A. All transverse and longitudinal seams, joints and duct penetrations shall be sealed. Sealant is to be non-hardening, latex based mastic, water resistant, fire resistive and compatible with mating materials. **SOLVENT BASED DUCT SEALANTS ARE PROHIBITED**. Ducts shall be sealed to SMACNA Seal Class "C" McGill Airflow product United Duct Sealer Water Base or better. Any obvious, detectable leakage in longitudinal seams shall also be sealed. Other recommendations for the installation of ducts and use of sealants are required as a minimum standard. These specifications shall prevail if they require a better quality installation.

3.6 DUCT SEALING FOR DOUBLE WALL SPIRAL INSULATED ROUND DUCT

A. All transverse and longitudinal seams, joints and duct penetrations shall be sealed. Sealant is to be non-hardening, latex based mastic, water resistant, fire resistive and compatible with mating materials. **SOLVENT BASED DUCT SEALANTS ARE PROHIBITED**. Ducts shall be sealed to SMACNA Seal Class "A" McGill Airflow product United Duct Sealer Water Base or better. Any obvious, detectable leakage in longitudinal seams shall also be sealed. Other recommendations for the installation of ducts and use of sealants are required as a minimum standard. These specifications shall prevail if they require a better quality installation.

3.7 TESTING FOR ALL DUCT

A. Leakage testing of the ductwork installed under this specification is not required. However Contractor shall perform minimal “testing” by examining all ductwork for leaks by listening and feeling the ductwork while in service, and examining the insulated ductwork for evidence of leaking such as "ballooning" of insulation.

3.8 CLEANING OF SYSTEMS

A. Prior to Substantial Completion, all ducts shall be cleaned of all dust and dirt, and construction debris, if any, that has collected in the ducts. This may include, and shall not be limited to, swabbing ductwork that has collected dirt and dust.

END OF SECTION

SECTION 15820

DUCTWORK ACCESSORIES

PART 1 - GENERAL

1.1 WORK INCLUDES

A. Air turning devices

B. Volume control (balancing) and splitter dampers

C. Flexible duct connections

D. Fan screens

E. Duct access doors

F. Test openings

G. Round, low pressure duct taps

1.2 RELATED WORK

A. Section 15767 – Heat Pump Air Conditioning Systems

1.3 REFERENCES

A. AFBMA 9 – Load Ratings and Fatigue Life for Ball Bearings

B. AFBMA 11 – Load Ratings and Fatigue Life for Roller Bearings

C. AMCA 99 – Standards Handbook

D. AMCA 210 – Laboratory Methods of Testing Fans for Rating Purposes

E. NFPA 90A – Installation of Air Conditioning and Ventilating Systems

F. NFPA 92A (National Fire Protection Association) – Smoke Control Systems

G. SMACNA – Low Pressure Duct Construction Standards

H. UL 33 (Underwriters Laboratories, Inc.) – Heat Responsive Links for Fire-Protection Service

I. UL 181 – Factory-Made Air Ducts and Connectors

J. UL 555 (Underwriters Laboratories, Inc.) – Fire Dampers and Ceiling Dampers

1.4 SUBMITTALS

A. Submit shop drawings and product data under provisions of Section 15050.

B. Provide shop drawings for shop fabricated assemblies indicated, including volume control dampers duct access doors duct test holes. Provide product data for hardware used.

C. Product Data: Submittal data shall include the following:
1. Air turning devices
2. Volume control (balancing) dampers
3. Flexible duct connections
4. Duct access doors
5. Flexible connections
6. Test openings
7. Round, low pressure duct taps
8. Manufacturer's Installation Instructions

1.5 OPERATION AND MAINTENANCE DATA

A. Submit under provisions of Section 15050.

B. Maintenance Data: Include instructions for lubrication, motor and drive replacement, spare parts list, and wiring diagrams.

1.6 DELIVERY, STORAGE, AND HANDLING

A. Deliver, store, protect and handle products to site under provisions of Section 15050.

B. Protect motors, shafts, and bearings from weather and construction dust.

PART 2 - PRODUCTS

2.1 AIR TURNING DEVICES

A. Manufacturers:
1. Aero Dyne
2. Anemostat
3. Barber-Coleman
4. Hart & Cooley
5. Or approved equal

B. Construct turning vanes and runners for rectangular elbows in accordance with SMACNA HVAC Duct Construction Standards, Fig. 2-3, with no trailing edge. Turning vanes shall be single wall, constructed of 24 gage sheet metal, shall be 2" radius, and shall be spaced 1 ½" on center. Turning vanes shall be installed per Figure 2-4, in the same Standard. Note that all rectangular 90° turns shall not change dimension in the turn, so turning vanes shall be constructed and installed for symmetrical 90° turns.

2.2 VOLUME CONTROL (BALANCING) AND SPLITTER DAMPERS

A. Furnish and install dampers where shown on the Drawings and wherever necessary for complete control of the air flow, including all supply, return and exhaust branches, "division" in main supply, return and exhaust ducts, each individual air supply outlet and fresh air ducts. Where access to dampers through a fixed suspended ceiling is necessary, the Contractor shall be responsible for the proper location of access doors.

B. Splitter dampers shall be fabricated of steel not lighter than 16 gauge. The leading edge of the damper shall be hemmed. Each splitter shall be a minimum of 12" long or 1-1/2 times the width of the smaller of the two branches it controls, whichever is greater. Dampers shall be carefully fitted, and shall be controlled by locking quadrants equal to Ventlok (Ventfabrics Corporation) No. 555 on exposed uninsulated ductwork, No. 641 on exposed externally insulated ductwork and No. 677 (2-5/8" diameter) chromium plated cover plate for concealed ductwork not above lay-in accessible ceilings. Furnish and install end bearings for the damper rods on the end opposite the quadrant when No. 555 or No. 641 regulators are used, and on both ends when No. 677 regulators are used.

C. On concealed ductwork above lay-in accessible ceilings use Ventlok No. 555 or No. 641 locking quadrant for splitter dampers.

D. Dampers larger than three (3) square feet in area shall be controlled by means of rods hinged near the leading edge of the damper with provisions for firmly anchoring the rod and with end bearings supporting the axle.

E. Volume dampers shall be equal to Ruskin MD15/MDRS25 or Greenheck MBD/MBDR. Dampers shall be pre-manufactured and assembled, not shop fabricated. Blades shall not exceed 48 inches (48") in length or twelve inches (12") in width and shall be of the opposed interlocking type. The blades shall be of not less than No. 16 gauge galvanized steel supported on one-half inch (1/2") diameter rust-proofed axles. Axle bearings shall be the self-lubricating ferrule type.

F. All adjustable dampers installed in externally insulated ductwork shall be installed with Ventlok No. 639, or equal, elevated dial operators. Insulation shall extend under the elevated dial and shall be sealed in place. All adjustable dampers installed in internally insulated ductwork shall be installed with Ventlok No. 635, or equal, dial operators. All damper shaft end penetrations in the ductwork shall be installed with Ventlok #607 end bearings.

2.3 FLEXIBLE DUCT CONNECTIONS

A. Where ducts connect to fans, including roof exhausters, flexible connections shall be made using "Ventglas" fabric that is fire-resistant, waterproof, mildew resistant and practically air tight, and shall weigh approximately thirty ounces (30 oz.) per square yard. There shall be a minimum of one-half inch (1/2") slack in the connections, and a minimum of two and one-half inches (2½") distance between the edges of the ducts except that there shall also be a minimum of one inch (1") of slack for each inch of static pressure on the fan system. This does not apply to Air Handling Units with internal isolation.

2.4 FAN SCREENS

A. Furnish and install screens on all duct, fan, etc., openings furnished by this Contractor which lead to, or are, outdoors. Screens shall be No. 16 gauge, one-half inch (1/2") mesh in a removable galvanized steel frame. Provide safety screens meeting OSHA requirements for protection of maintenance personnel on all fan inlets and fan outlets to which no ductwork is connected.

2.5 TEST OPENINGS

A. Furnish and install in the return air duct and in the discharge duct of each fan unit Ventlok No. 699 instrument test holes. The test holes shall be installed in locations as required to measure pressure drops across each item in the system, e.g., OA louvers, filters, fans, coils, intermediate points in duct runs, etc.

2.6 ROUND, LOW PRESSURE TAPS (Conical Bell Mouth Fittings)

A. Conical fittings may be used for duct taps and shall include quadrant dampers on all lines to air devices (diffusers and grilles) even though a volume damper is specified for the air device. (This does not apply to medium pressure duct.) Spin-in fittings shall be sealed at the duct tap with a gasket, or compression fit, or sealed with sealant specified for medium pressure ductwork. The location of spin-in fittings in the ducts shall be determined after dual or single duct terminal units are hung or the location of the light fixtures is known so as to minimize flexible duct lengths and sharp bends.

B. The conical fitting shall be made of at least 26 gage galvanized sheet metal. The construction to be a two-piece fitting with a minimum overall length of 6 inches and shall be factory sealed for high pressure requirements. Average loss coefficient for sizes 6, 8, and 10 shall be less than 0.055.

C. Each shall be provided with minimum 24 gage damper plate with locking quadrant operator and sealed end bearings. Damper blade shall be securely attached to shaft to prevent damper from rotating around shaft.

D. Provide flange and gasket with adhesive peel-back paper for ease of application. The fitting shall be further secured by sheet metal screws spaced evenly at no more than 4 inches on-center with a minimum of four screws per fitting.

E. The conical bellmouth fitting shall be Series 3000G as manufactured by Flexmaster U.S.A., Inc., Buckley Air Products, Inc., 'AIR-TITE', or approved equal.

PART 3 - EXECUTION

3.1 EXAMINATION

A. Verify ducts and equipment installations are ready for accessories.

3.2 INSTALLATION

A. Install turning vanes in all rectangular, mitered elbows in accordance with SMACNA standards and/or Manufacturer's recommendations.

B. Install equipment and accessories in accordance with Manufacturer's instructions.

C. Provide volume balancing dampers at points on low pressure supply, return, and exhaust systems where branches are taken from larger ducts as required for air balancing. Use splitter dampers only where indicated.

D. Provide duct test holes where indicated and where required for testing and balancing purposes. Refer also to Section 15950.

END OF SECTION

SECTION 15830

FANS

PART 1 - GENERAL

1.1 SECTION INCLUDES

A. Ceiling exhaust fans

B. Inline cabinet exhaust fans

C. Wall and roof mounted centrifugal exhaust fans

1.2 RELATED WORK

A. Section 15050 – Basic Mechanical Requirements

B. S Section 15767 – Heat Pump Air Conditioning Systems(ductwork)

C. Section 15820 – Ductwork Accessories

D. Division 16 – Electrical

1.3 REFERENCES

A. AFBMA 9 – Load Ratings and Fatigue Life for Ball Bearings

B. AFMBA 11 – Load Ratings and Fatigue Life for Roller Bearings

C. AMCA 99 – Standards Handbook

D. AMCA 210 – Laboratory Methods of Testing Fans for Rating Purposes

E. AMCA 261 – Directory of Products Licensed to Bear the AMCA Certified Ratings Seal

F. AMCA 300 – Test Code for Sound Rating Air Moving Devices

G. AMCA 301 – Method of Publishing Sound Ratings for Air Moving Devices

H. NFPA 70 – National Electrical Code

I. NFPA 96 – Installation of Equipment for the Removal of Smoke and Grease Vapors from Commercial Cooking Equipment

J. SMACNA – HVAC Duct Construction Standards – Metal and Flexible

K. UL 705 – Power Ventilators

1.4 SUBMITTALS

A. Submittals must follow the provisions of the Uniform General Conditions, Special Conditions and Section 15050 of these specifications.

B. Product Data: Provide data on fans and accessories including sound power levels at rated capacity, and electrical characteristics and connection requirements.

C. Provide complete Manufacturer's Installation Instructions.

1.5 OPERATION AND MAINTENANCE DATA

A. Submit under provisions of the Uniform General Conditions, Special Conditions and Section 15050.

B. Maintenance Data: Include instructions for lubrication, motor and drive replacement, spare parts list, and wiring diagrams.

1.6 DELIVERY, STORAGE, AND HANDLING

A. Deliver, store, protect and handle products to site under provisions of the Uniform General Conditions, Special Conditions and Section 15050.

B. Protect motors, shafts, and bearings from weather and construction dust.

PART 2 - PRODUCTS

2.1 MANUFACTURERS

A. Ceiling Mounted Fans and Systems:
1. Dayton
2. Broan
3. Car-Mon
4. Cook
5. Greenheck
6. Approved equal of capacities and types as scheduled
7. Equivalent fans selections shall not increase motor horsepower (amperage), or increase noise level from that specified.

B. Inline Cabinet Fans:
1. Greenheck
2. Chicago Blower
3. Acme
4. Cook
5. or approved equal

C. Wall and Roof Mounted Centrifugal Exhaust Fans:
1. Greenheck

2. Chicago Blower
3. Buffalo Forge
4. Woods
5. Cook
6. Approved equal

2.2 CEILING MOUNTED EXHAUST FANS

A. Direct drive centrifugal forward curved wheel in steel housing.

B. Resiliently mounted lifetime lubricated plug-in motor.

C. Matte white polymeric grille with torsion spring mounting.

D. Polymeric duct connection collar and backdraft shutter.

E. Provide optional wall cap where indicated on drawings.

F. Provide disconnect switch option for all fans and motor overload option for all fractional horsepower fans.

2.3 INLINE CABINET FANS

A. Performance Ratings: Conform to AMCA 210 and/or bear the AMCA Certified Rating Seal.

B. Fabrication: Corrosion resistant galvanized steel housing, lined with 1/2” sound absorbing fiberglass insulation. Outlet duct shall be complete with integral aluminum backdraft damper. Fan shall be configured for horizontal inlet and outlet connections.

C. Static and Dynamic Balance: Eliminate vibration or noise transmission to occupied areas.

D. Fan shall be forward curved, direct drive inline cabinet fan, conforming to the scheduled capacity requirements.

E. Motors shall have automatic reset thermal overload protection, and shall be mounted on vibration isolators. Motor shall be compatible for use with speed controls.

F. Cover shall be easily removable for access to motor.

G. Accessories: Provide factory installed disconnecting means.

2.4 WALL AND ROOF MOUNTED CENTRIFUGAL EXHAUST FANS

A. General:
1. All fans shall be backward inclined, or airfoil type. Radial and forward inclined fans are not acceptable.

2. Performance Ratings: Conform to AMCA 210 and bear the AMCA Certified Rating Seal.
3. Sound Ratings: AMCA 301, tested to AMCA 300, and bear AMCA Certified Sound Rating Seal.
4. Fabrication: Conform to AMCA 99.
5. Performance Base: 1000 feet above sea level conditions.
6. Temperature Limit: Maximum 600°F (unless noted otherwise).
7. Static and Dynamic Balance: Eliminate vibration or noise transmission to occupied areas.
8. Grease lubricated and sealed bearings shall be selected for a minimum average life in excess of B-10, minimum life 50,000 hours at maximum catalogued operating conditions. Grease fittings shall be accessible without the disassembly of any part of the fan, or the removal of panels or shrouds. In the event that a grease fitting is inherently inaccessible, the fitting shall be extended to an accessible location using stainless steel tubing. The tubing shall contain at least one full strain relief loop of a minimum diameter of 4 inches.
9. Capacity ratings shall be based on tests performed in accordance with AMCA Standard 210. Each fan shall carry near the unit nameplate the AMCA seal indicating that capacity ratings are certified.
10. Housings for all fans shall be spun aluminum and shall have a mounting ring or frame to provide for mounting of fan.
11. Fan wheels shall be aluminum, non-overloading, centrifugal, backward-inclined or airfoil, with aluminum rub ring.
12. Accessories shall include a gravity backdraft damper, and ¼" mesh screen. Damper shall be installed on damper trays so as to not have their operation obstructed by the fan.

B. Wall mounted centrifugal exhaust fans:
1. All surfaces exposed to airflow shall have a Heresite or baked phenolic coating.
2. Fans shall have an explosion proof or intrinsically safe, disconnect switch and vibration isolation for entire motor and drive assembly. Motor shall be explosion proof or TEFC, 115 VAC, 60 cycle, single phase, with thermal overloads, unless specifically stated otherwise in equipment schedule in drawings.

PART 3 - EXECUTION

3.1 INSTALLATION

A. Install in accordance with Manufacturer's instructions.

B. Do not operate fans for any purpose until ductwork is clean, filters in place, bearings lubricated, and fan has been test run under observation.

C. Install exhaust fans and their attendant ductwork at locations indicated on drawings. Refer to Architectural plans for additional requirements.

D. Fans shall be operated as indicated on drawings. Refer to Electrical Plans and Specifications.

END OF SECTION

SECTION 15850

AIR OUTLETS AND INLETS

PART 1 - GENERAL

1.1 WORK INCLUDES

A. Diffusers

B. Registers/Grilles

1.2 RELATED WORK

A. Section 15050 – Basic Mechanical Requirements

B. Section 15097 – Ductwork Insulation

C. Section 15767 – Heat Pump Air Conditioning Systems

D. Section 15810 – Ductwork

E. Section 15820 – Ductwork Accessories

1.3 REFERENCES

A. ADC 1062 – Certification, Rating and Test Manual

B. AMCA 500 – Test Method for Louvers, Dampers and Shutters

C. ANSI/NFPA 90A – Installation of Air Conditioning and Ventilating Systems

D. ARI 650 – Air Outlets and Inlets

E. ASHRAE 70 – Method of Testing for Rating the Air Flow Performance of Outlets and Inlets

F. SMACNA – Low Pressure Duct Construction Standard

G. Uniform Mechanical Code, latest edition

1.4 QUALITY ASSURANCE

A. Test and rate performance of air outlets and inlets in accordance with ADC Equipment Test Code 1062 and ASHRAE 70.

B. Test and rate performance of louvers in accordance with AMCA 500.

1.5 REGULATORY REQUIREMENTS

A. Conform to ANSI/NFPA 90A and UMC.

1.6 SUBMITTALS

A. Submit product data and Manufacturers installation instructions for all diffusers, grilles and registers under provisions of Uniform General Conditions, Special Conditions, and Section 15050.

B. Provide product data for items required for this project.

C. Submit schedule of outlets and inlets indicating type, size, location, application, and noise level.

D. Review requirements of outlets and inlets as to size, finish, and type of mounting prior to submitting product data and schedules of outlets and inlets.

PART 2 - PRODUCTS

2.1 AIR SUPPLIES AND RETURNS

A. Grilles, registers and ceiling outlets shall be as scheduled on the Drawings and shall be provided with sponge rubber or soft felt gaskets. If a Manufacturer other than the one scheduled is used, the sizes shown on the Drawings shall be checked for performance, noise level, face velocity, throw, pressure drop, etc., before the submittal is made. Selections shall meet the Manufacturer's own published data for the above performance criteria. The throw shall be such that the velocity at the end of the throw in the five foot occupancy zone shall neither be more than 50 FPM nor less than 25 FPM. Noise levels shall not exceed those published in the ASHRAE Guide for the type of space being served (NC level).

B. Locations of outlets on Drawings are approximate and shall be coordinated with other trades to make symmetrical patterns and shall be governed by the established pattern of the lighting fixtures or architectural reflected ceiling plan. Where called for on the schedules, the grilles, registers and ceiling outlets shall be provided with deflecting devices and manual damper. These shall be the standard product of the Manufacturer, subject to review by the Architect, and equal to brand scheduled.

2.2 ACCEPTABLE MANUFACTURERS – DIFFUSERS, GRILLES AND REGISTERS

A. Price

B. Metal*Aire

C. Titus

D. Krueger

E. Approved equal.

2.3 RECTANGULAR CEILING DIFFUSERS

A. Rectangular, extruded aluminum, all aluminum construction, multicore type diffuser to discharge air in either a four-way, 360 degree pattern, or a 3-way, 270 degree pattern with sectorizing baffles where indicated. Refer to schedule in construction drawings.

B. Provide inverted T-bar type installation frame, or in plaster ceilings, provide plaster frame and ceiling frame, as indicated in the diffuser schedule in the drawings.

C. Fabricate of aluminum with standard baked enamel off-white finish.

2.4 RECTANGULAR AIR RETURN GRILLE

A. Rectangular, aluminum, “egg-crate” design, for return of air to air handler. Refer to equipment schedule in drawings.

B. Fabricate with Manufacturer’s standard finish.

PART 3 - EXECUTION

3.1 INSTALLATION

A. Install items in accordance with Manufacturers' instructions.

B. Check location of outlets and inlets and make necessary adjustments in position to conform to architectural features, symmetry, and lighting arrangement.

C. Provide back draft dampers on gravity relief vent as specified.

D. Install diffusers to ductwork with air tight connection. Refer to equipment specifications.

E. Provide balancing dampers on duct take-off to diffusers, and grilles and registers, regardless of whether dampers are specified as part of the diffuser, or grille and register assembly.

F. Paint ductwork visible behind air outlets and inlets matte black.

G. All air supply devices shall be insulated on their topsides with blanket type insulation equal to the insulation used for insulating ductwork. See specifications for ductwork insulation.

END OF SECTION

SECTION 15950

TESTING, ADJUSTING AND BALANCING

PART 1 - GENERAL

1.1 SECTION INCLUDES

A. Testing, adjustment, and balancing of air systems

B. Measurement of final operating condition of HVAC systems

C. Sound measurement of equipment operating conditions

D. Vibration measurement of equipment operating conditions

1.2 RELATED SECTIONS

A. Section 15050 – Basic Mechanical Requirements

B. Section 15767 – Heat Pump Air Conditioning Systems

C. Section 15810 – Ductwork

D. Section 15820 – Ductwork Accessories

E. Section 15850 – Air Outlets and Inlets

1.3 REFERENCES

A. AABC – National Standards for Field Measurement and Instrumentation, Total System Balance

B. ASHRAE – Systems Handbook: Testing, Adjusting and Balancing

C. NEBB – Procedural Standards for Testing, Balancing and Adjusting of Environmental Systems

1.4 CONTRACTOR'S SCOPE OF WORK

A. Testing, adjusting, and balancing (TAB) of the air conditioning systems and related ancillary equipment shall be performed by an impartial, technically qualified TAB firm, with no connection to the Contractor or any Subcontractor, except for a contract to perform the work described herein. The preparation for, and corrections necessary for the Testing, Adjusting and Balancing of these systems, as described herein, are the responsibility of the Contractor.

B. As a part of this Construction Contract, the Contractor shall provide for a maximum of two changes or replacements to the sheaves, belts, dampers, valves, etc. required for correct air balance as advised by the TAB firm, at no additional cost to the Owner.

C. The Contractor shall provide and coordinate the services of qualified, responsible Subcontractors, suppliers and personnel as required to correct, repair, and/or replace any and all deficient items or conditions found during the course of this project, including the testing, adjusting and balancing period.

D. In order that all systems may be properly tested, balanced, and adjusted as specified herein, the Contractor shall operate said systems at his expense for the length of time necessary to properly verify their completion and readiness for TAB. This length of time shall be subject to the approval of the Construction Inspector.

E. Project Contract completion schedules shall allow for sufficient time to permit the completion of TAB services prior to Owner occupancy. The contractor shall allow no less than three weeks for the testing and balancing activities of the owner provided services, during the construction period, and prior to Substantial Completion as defined in the Uniform General Conditions of this Construction Document. Note that this period may be concurrent with other construction activities which shall not conflict with the TAB of the systems described herein.

F. The Drawings and Specifications indicate valves, dampers, and miscellaneous adjustment devices for the purpose of adjustment to obtain optimum operating conditions, and it will be the responsibility of the Contractor to install these devices in a manner that will leave them accessible and readily adjustable. Should any such device not be readily accessible, the Contractor shall provide access as required for successful completion of the TAB. Also, any malfunction encountered by TAB personnel and reported to the Contractor or the Construction Inspector shall be corrected by the Contractor immediately.

1.5 RESPONSIBILITIES OF THE PROJECT CONTRACTOR

A. The Contractor shall:
   1. Have the building and air conditioning systems in complete operational readiness prior to the beginning of TAB work.
   2. Allow sufficient time for the TAB firm to perform the contracted TAB work within the construction schedule.
   3. Promptly correct deficiencies of materials and workmanship identified as delaying completion of TAB work.
   4. Complete operational readiness of the building requires that construction status of the building shall permit the closing of doors, windows, ceilings installed, etc., to obtain simulated or projected operating conditions.
   5. Complete operational readiness of the air conditioning systems also requires that the following be accomplished:
      a. Air Distribution Systems:

1) Verify installation for conformity to design. All supply, return and exhaust ducts terminated and pressure tested for leakage as required by the Specifications.
2) All control dampers, and volume balancing dampers, shall be properly installed and functional. Dampers serving requirements of minimum and maximum outside, return and relief air shall provide tight closure and full opening, smooth and free operation.
3) All supply, return, and exhaust grilles, registers, diffusers shall be installed and operating properly.
4) Air handling systems, units and associated apparatus, such as heating and cooling coils, filter sections, access doors, etc., shall be sealed as specified in the equipment specifications to eliminate excessive bypass or leakage of air.
5) All fans (supply, return and exhaust) included in the project shall be operating and verified for freedom from vibration, proper fan rotation and belt tension; heater elements in motor starters of proper size and rating; record motor amperage and voltage on each phase at startup and running, and verify they do not exceed nameplate ratings.

b. Automatic Controls:
1) Verify that all control components are installed in accordance with project requirements and are functional, including all electrical interlocks, damper sequences, air resets, fire and freeze stats, high and low temperature thermostats, and duct mounted smoke detectors.
2) All controlling instruments shall be calibrated and set for designed operating conditions.

c. Tabulated Data:
1) The motor amperages and voltages for the air handler fans indicated above shall be recorded showing "actual" and "nameplate" voltage and amperage. This also applies to each piece of electrically driven air conditioning equipment in the system including exhaust fans and other fans of fractional horsepower.

1.6 REQUISITES OF THE TAB FIRM

A. The Firm shall be neither attached to, nor affiliated with, except by contract, any other Contractor or Subcontractor associated with this project.

B. The Firm shall be one which is organized to provide professional services of this specified type in the State of Texas and as a minimum shall have a minimum of one (1) professional engineer licensed in the State of Texas, with current registration, to perform such professional services. This engineer shall be personally responsible for developing the job site data as required in the test procedures outlined in these Specifications.

Further, the engineer shall be on site during the collection of data and shall personally supervise all TAB technicians during balancing operations.

C. The principals of the firm, and the persons performing the TAB, shall be either NEBB or AABC certified.

D. The Firm shall have operated a minimum of five years under its current Firm name, and shall be in good standing with the State of Texas, Franchise Tax Board.

E. The Firm shall be capable of performing the services specified at the location of the facility described within the time specified, preparing and submitting the detailed report of the actual field work performed, and following up the basic work as may be required.

F. All personnel working on the job site shall be either professional engineers or engineering technicians, who shall have been permanent, full time employees of the firm for a minimum of six (6) months prior to the start of work for this specific project.

G. **The TAB Firm shall submit biographical data on the individual proposed to directly supervise the TAB work, as well as other personnel scheduled to perform the technical work under the contract.** It shall also submit a background record of at least five years of specialized experience in the field of air system balancing, and shall possess properly calibrated instrumentation. The supervisory personnel for the TAB firm shall be registered engineers in the mechanical field and all of the employees used in the TAB firm shall be permanent, full-time employees of the firm.

1.7 DOCUMENTS

A. The TAB firm shall, as a requirement of the TAB contract, arrange with the Contractor to compile one set of mechanical specifications, all pertinent change orders, and the following:
   1. One complete set of Drawings
   2. One set of mechanical floor plans of the conditioned spaces. These Drawings shall be ozalid type (blue or black on light background) reproductions to facilitate marking
   3. Approved submittal data on equipment installed, and related changes as required to accomplish the test procedures outlined in the following specifications

1.8 RESPONSIBILITIES OF THE TAB FIRM

A. Check, adjust, and balance the components of the air conditioning system which will result in optimal noise, temperature, and airflow conditions in the conditioned spaces of the building while the equipment of the system is operating economically. This is intended to be accomplished after the system components are installed and operating as provided for in the contract documents. It is the responsibility of the Mechanical Contractor to place the equipment into service.

B. Liaison and Early Inspection:
   1. Inspect the installation of mechanical piping systems, sheet metal work, temperature controls and other component parts of the heating, air conditioning and ventilating systems during the construction stage for the proper arrangement and adequate provisions of the systems for ease of testing and balancing.
   2. After completing this review during the construction stage, the TAB Firm shall provide the Construction Inspector with a list of sequential steps that TAB will follow in performing the balancing operation. (It is not intended that this procedural schedule be as detailed as the "Basic Procedures" outlined in the AABC Standards Manual, for example.) A list of the significant operations that will be performed in the balancing process shall be provided. The purpose is to provide the Owner with an outline of the steps that the TAB Firm will follow so that he may be aware of the progress being made. It is understood that, as the balancing progresses, the TAB Firm may find it necessary to deviate from the scope and order in which the steps are listed; however, in general it will be expected that the TAB Firm will follow the provided schedule.

C. During the balancing process, as abnormalities and malfunctions of equipment or components are discovered by the TAB personnel, the Construction Inspector shall be advised in writing so that the condition can be corrected by the Construction Contractor. The written document need not be formal, but must be understandable and legible. If corrected prior to the completion of the TAB, data from malfunctioning equipment shall not be reported in the final TAB report. If not corrected, then the TAB report shall be annotated with all abnormalities listed clearly.

D. The TAB Report:
   1. The activities described in this section shall culminate in a report to be provided in triplicate to the Owner or his designated representative. The intent of the final report is to provide a reference of actual operating conditions for the Owner's operating personnel.
   2. All measurements and recorded readings (of air, water, electricity, etc.) that appear in the reports shall have been made onsite by the permanently employed technicians or engineers of the firm.
   3. At the option of the Construction Inspector, all data sheets tabulated each day by TAB personnel shall be submitted for initial by the Construction Inspector. Those work sheets so initialed, or copies thereof, shall be presented as a supplement to the final TAB report.
   4. The report shall be certified and approved by the previously described professional engineer of the firm and an original signed and dated seal shall appear on the first page of each copy, in compliance with the Texas Engineers Practice Act. The report shall be recorded on standard forms approved by the Owner.
   5. The TAB Report shall include the following as a minimum:
      a. PREFACE: A general discussion of the system, any idiosyncrasies, and any problems encountered, an outline of normal ventilation cycles of operation, and any noise problem not corrected.

b. PITOT TUBE TRAVERSES: For use in future troubleshooting by maintenance personnel, all exhaust ducts, main supply ducts, fume hoods and return ducts shall have air velocity and volume measured and recorded by the traverse method. Locations of these traverse test stations shall be described on the sheet containing the data.

c. TEMPERATURE TABULATION: Temperatures shall be recorded for each conditioned space on a room-by-room basis. Record outside ambient temperature at two hour intervals. The total variation in conditioned space temperatures shall not exceed 2 degrees variance from the thermostat settings.

d. AIR VOLUMES & VELOCITIES: Air volumes and velocities shall be measured at each supply grille, return air grille, and exhaust air grille or air handling device. In all fan systems, the air quantities indicated on the plans may be varied as required to provide a maximum temperature variation of two (2) degrees within each separately controlled space, but the total air quantity indicated for each zone must be obtained. It shall be the obligation of the Contractor to furnish or revise fan drive and/or motors if necessary, without cost to the Owner, to attain the specified air volumes.

e. STATIC PRESSURE DROPS: Static pressure gains or losses shall be measured across each supply fan, cooling coil, heating coil, return air fan, air handling unit filter and exhaust fan. These readings shall be graphically compared to the specific fan curve.

f. STATIC PRESSURES: Static pressures shall be measured and recorded for this report at the furthest air device (e.g. terminal unit) from the air handler supplying that device.

g. FAN SPEEDS: The operating speed of each fan shall be measured in RPM.

h. DRAWINGS: The Drawings mentioned above under "Documents" shall have each set of zone dampers and supply air openings numbered and/or lettered to correspond to the numbers and letters used on the report data sheets so that data in the report can be correlated with each specific supply air opening in the building. If room numbers actually used in the building differ from those on the plans, the building room numbers shall be marked on these Drawings. Only one such marked-up set of Drawings need be provided with the three copies of the TAB report.

6. Before final acceptance of the TAB report, the report data, at the discretion of the Owner, shall be verified and demonstrated one time on the job site by the TAB firm in the presence of the Architect's, Engineer's and the Owner's representatives. Representatives of the testing firm doing the work shall be present and provide the necessary equipment for test data verification. The Owner shall notify the Contractor of the acceptance of the report after clarification of any questions on the data recorded therein. This acceptance will terminate all bond and insurance requirements of TAB firm. Final acceptance of the report will culminate in the payment of the full amount of the TAB contract.

7. In order to permit the Construction Contractor time to work off TAB deficiency lists, the air balance firm shall provide for additional progress inspection visits to the project site from the start of balancing operations until completion.
8. The firm shall be responsible for inspecting, adjusting, balancing, and logging the data on the performance of all fans, all dampers in the duct system, all air distribution devices, the flows of steam or water through all coils, and the power consumption of all motors. The Contractor, Mechanical Contractor, the various Subcontractors involved, and the Suppliers of the equipment installed shall all cooperate with balancing firm to provide all necessary data on the design and proper application of the systemic components and shall furnish all labor and material required to eliminate any deficiency in performance.
9. During the TAB work, the temperature regulation shall be adjusted for proper relationship between controlling instruments. The Owner (Inspector) shall be advised of any instruments out of calibration so that the Controls Contractor may recalibrate the equipment, using data supplied by the balancing firm. After recalibration, room temperatures shall be measured again as described in "Temperature Tabulation" paragraph.
10. An additional inspection is required approximately ninety (90) days after occupancy of the building. The TAB firm shall insure that satisfactory performance is being maintained throughout and satisfy any unusual conditions.
11. An additional inspection in the building shall be made by the Firm during the season opposite that in which the initial adjustments were made (summer or winter). At that time any necessary modifications to the initial adjustment required to produce optimum operation of the system components shall be made to produce the proper seasonal conditions in each conditioned space. At the time of opposite season checkout, the Owner's Construction Inspector or Facility Superintendent, or both, shall be given timely notification before any readings or adjustments are made so that they may participate in the checkout.

PART 2 – PRODUCTS (Not Used)

PART 3 - EXECUTION (Not Used)

END OF SECTION

SECTION 16010

BASIC ELECTRICAL REQUIREMENTS

PART 1 - GENERAL

1.1 RELATED SECTIONS

A. Section 15050 – Basic Mechanical Requirements

B. Section 15920 – HVAC Control Wiring

1.2 WORK INCLUDES

A. The Contractor shall install, complete and operating, electrical systems consisting of the following :

1. Complete distribution for power and lighting as shown on plans, including switches and circuit breakers, feeders, sub feeders, grounding, switchboards, transformers, generators, transfer switches, panelboards, branch circuits, line voltage control wiring, switches and receptacles, telecommunications equipment, and all other electrical or telecommunications equipment shown on drawings.
2. Contractor shall make all final connections to equipment furnished by other trades.
3. Contractor shall make all connections to all motors, electrically operated equipment and line voltage controls.
4. All conduits, sleeves and support systems required for all systems and all cable trays.
5. Temporary electrical power and lighting shall be furnished, installed and maintained for all trades. Building lighting may be used as construction lighting only after it is permanently installed.
6. Miscellaneous items obviously required for a complete and operating system but not specifically called for on the drawings or in the specifications shall be provided by the Contractor at no extra cost to the Owner (nuts and bolts, masonry anchors, conduit and equipment supports, drilling welding, scaffolding, crane service, etc.).

1.3 REFERENCES, STANDARDS, AND REGULATORY REQUIREMENTS: The following state and local codes, ordinances, and industry standards shall be complied with on this project as applicable:

A. The “Authority Having Jurisdiction” over the project described by these documents is the Owner, Texas Department of Transportation, as an Agency of the State of Texas. As such, it is required that the installation shall meet the minimum standards prescribed in the latest editions of the following listed codes and standards, which are made a part of these Specifications.

B. American National Standards Institute (ANSI): All current editions of applicable manuals and standards

C. Underwriters' Laboratories (UL)

D. Insulated Cable Engineers Association (ICEA)

E. Institute of Electrical and Electronic Engineers (IEEE)

F. American Society of Testing Materials (ASTM): All current editions of applicable manuals and standards.

G. National Fire Protection Association Standards (NFPA):
1. NFPA No. 70, National Electrical Code
2. NFPA No. 90A, Air Conditioning Systems
3. NFPA No. 91, Blower & Exhaust Systems
4. NFPA No. 101, Life Safety Code
5. NFPA No. 241, Standard for Safeguarding Construction, Alteration and Demolition Operations
6. NFPA No. 255, Method of Test of Surface Burning Characteristics of Building Materials
7. NFPA No. 258, Standard Research Test Method for Determining Smoke Generation of Solid Materials

H. National Electrical Manufacturers' Association (NEMA): All current editions of applicable manuals and standards.

I. Local Fire Department and the State Fire Marshall, as may be applicable to construction on this site

J. Occupational Safety and Health Act (OSHA): All applicable safety standards

K. Texas Occupational Safety Act: All applicable safety standards

L. International Building Code, latest edition

M. Refer to Specification Sections hereinafter bound for additional Codes and Standards

N. All materials and workmanship shall comply with all applicable state and national codes, Specifications, and industry standards. In all cases where Underwriters' Laboratories, Inc. has established standards for a particular type material, such material shall comply with these standards. Evidence of compliance shall be the UL "label" or "listing" under Re-Examination Service.

1.4 GENERAL MATERIALS AND EQUIPMENT REQUIREMENTS

A. Note that no asbestos-bearing, or solvent based, or lead containing materials shall be used on this project. If any prohibited materials are installed, all of the material, including the underlying material, shall be removed and disposed of as required by local, state, and federal requirements.

B. The Contractor shall be responsible for fitting the material and apparatus specified in this division into the building and shall carefully lay out the specified work at the site to conform with the structural conditions, to avoid all obstructions, to conform to the details of the installation and thereby to provide an integrated installation operating as a complete set of systems.

C. Verification of Dimensions: The Contractor shall be responsible for the coordination and proper relation of his work to the building structure and to the work of all trades. The Contractor shall visit the premises and become thoroughly familiarize with all details of the work and working conditions, to verify all dimensions in the field, and to advise the Design Engineer of any discrepancy before performing any work. Adjustments to the work required in order to facilitate a coordinated installation shall be made at no additional cost to the Owner or the Design Engineer.

D. The Electrical Drawings are necessarily diagrammatic by their nature, and are not intended to show every connection in detail or every pipe or conduit in its exact location. These details are subject to the requirements of standards referenced elsewhere in these specifications, and structural and architectural conditions. The Contractor shall carefully investigate structural and finish conditions and shall coordinate the separate trades in order to avoid interference between the various phases of work. Work shall be organized and laid out so that it will be concealed in furred chases and suspended ceilings, etc., in finished portions of the building, unless specifically noted to be exposed. All work shall be installed parallel or perpendicular to the lines of the building unless noted otherwise.

E. When the Drawings do not give exact details as to the elevation of conduit and cable trays, the Contractor shall physically arrange the systems to fit in the space available at the elevations intended with proper clearances. Exposed conduit and the cable tray systems are generally intended to be installed true and square to the building construction, and located as high as possible against the structure in a neat and workmanlike manner. The Drawings do not show all required offsets, and other location details. Work shall be concealed in all finished areas.

F. Storage at Site: The Contractor shall not receive material or equipment at the job site until there is suitable space provided to properly protect equipment from rust, drip, humidity, and dust damage.

G. Capacities shall be not less than those indicated but shall be such that no component or system becomes inoperative or is damaged because of startup or other overload conditions.

H. Conformance with Agency Requirements: Where materials or equipment are specified to be approved, listed, tested, or labeled by the Underwriters' Laboratories, Inc. (UL), the Contractor shall submit proof that the items furnished under this Section of the Specifications conform to such requirements. The label of the Underwriters Laboratories, Inc., applied to the item will be acceptable as sufficient evidence that the items conform to such requirements.

I. Nameplates: Each major component of equipment shall have the Manufacturer's name, address, and catalog number on a plate securely attached to the item of equipment. All

data on nameplates shall be legible at the time of Final Inspection. Under no circumstances shall any nameplate be painted over for any reason. If a new or existing nameplate is painted over, the nameplate shall be restored to as new condition, or replaced with a new nameplate provided by the Manufacturer.

J. Prevention of Rust: Standard factory finish will be acceptable on equipment specified by model number; otherwise, surfaces of ferrous metal shall be given a rust inhibiting coating. The treatment shall withstand 200 hours in salt spray fog test, in accordance with Method 6061 of Federal Standard No. 141. Immediately after completion of the test, the specimen shall show no signs of wrinkling or cracking and no signs of rust creepage beyond 1/8" on either side of the scratch mark. Where rust inhibitor coating is specified hereinafter, any treatment that will pass the above test is acceptable unless a specific coating is specified except that coal tar or asphalt type coating will not be acceptable unless so stated for a specific item. Where steel is specified to be hot-dip galvanized, mill-galvanized sheet steel may be used provided all raw edges are painted with a zinc-pigmented paint conforming to Military Specification MIL-P-26915.

1.5 DEFINITIONS (Note: These definitions are included here to clarify the direction and intention of this specification. The list given here is not by any means complete. For further clarification as required, Contractor shall contact the designated owner's representative.)

A. ARCHITECT (or DESIGN ARCHITECT): The "Architect" or "Design Architect" is defined as the architect whose seal appears on the construction specifications title page and on the drawings for the particular area under consideration.

B. AUTHORITY HAVING JURISDICTION: The Texas Department of Transportation, as an agency of the State of Texas is the "Authority Having Jurisdiction" in any matter of code assignment, interpretation, etc., as applies to this project. In many cases, at the Owners option, the Authority Having Jurisdiction may choose to apply the policies and procedures of an Authority not having jurisdiction, and as such, delegate its authority over some issues. In the event that some of its authority has been delegated to another Authority, such delegation will be specifically delineated in these specifications. In many instances the sections of the specifications will include references which will indicate codes, standards, and regulations which have bearing on the project, and will be enforced by the AUTHORITY HAVING JURISDICTION. The Owner may, at its option and at any time, defer to a local jurisdiction as the AUTHORITY HAVING JURISDICTION. This action, if taken, shall not subrogate any of the authority of the Owner, nor have any bearing on other unrelated requirements of these specifications.

C. CONCEALED: "Concealed" areas are those areas which cannot be seen by the building occupants, such as inside walls or above ceilings.

D. ENGINEER (or DESIGN ENGINEER or ENGINEER OF RECORD): The "Engineer" or "Design Engineer" or "Engineer of Record" is defined as the engineer whose seal appears on the construction specifications title page and on the drawings for the particular area under consideration. Note that in some cases, the work of two or more Engineers may appear on the same drawing or document. In that case, the area of responsibility of each Engineer will be noted in the area of each signed seal.

E. EXPOSED: “Exposed” areas are all areas which are exposed to view by the building occupants, including under counters, inside cabinets and closets, plus all mechanical and electrical rooms.

F. OWNER: As used in these specifications, “Owner” means the Texas Department of Transportation, as represented by the assigned designee.

G. INDICATED: The term "indicated" is a cross reference to graphic representations, notes or schedules on drawings, to other paragraphs or schedules in the Specifications, and to similar means of recording requirements on contract documents. Where terms such as "shown", "noted", "scheduled", and "specified" are used in lieu of "indicated", it is for the purpose of helping reader locate the cross reference, and no limitation of location is intended except as specifically noted.

H. DIRECTED, REQUESTED, etc.: Where not otherwise explained, terms such as "directed", "requested", "authorized", "selected", "approved", "required", "accepted", and "permitted" mean directed by Architect/Engineer", "requested by Architect/Engineer" and similar phrases. However, no such implied meaning will be interpreted to extend Architect's/Engineer's responsibility into Contractor's area of construction supervision and job safety.

I. AND/OR: Where "and/or" is used in these Specifications or on the Drawings, it shall mean "that situations exist where either one or both conditions occur or are required and shall not be interpreted to permit an option on the part of the Contractor.

J. APPROVE: Where used in conjunction with Architect's/Engineer's response to submittals, requests, applications, inquiries, reports and claims by Contractor, the meaning of term "approved" will be held to limitations to Architect's/Engineer's responsibilities and duties as specified in General and Supplementary Conditions. In no case will "approval" by Architect/Engineer be interpreted as a release of Contractor from responsibilities to fulfill requirements of contract documents or to extend Architect's/Engineer's responsibility into Contractor's area of construction supervision and job safety.

K. AS REQUIRED: Where "as required" is used in these Specifications or on the drawings, it shall mean "that situations exist that are not necessarily described in detail or indicated that may cause the Contractor certain complications in performing the work described or indicated. These complications entail the normal coordination activities expected of the Contractor where multiple trades are involved and new or existing construction causes deviations to otherwise simplistic approaches to the work to be performed. The term shall not be interpreted to permit an option on the part of the Contractor to achieve the end result."

L. FURNISH:

1. The term "furnish" is used to mean "supply and deliver to project site, ready for unloading, unpacking, assemble, installation, and similar operations."
2. Where "furnish" applies to work for which the installation is not otherwise specified, "furnish" in such case shall mean "furnish and install."

M. INSTALL: The term "install" is used to describe operations at project site including "unloading, unpacking, assembly, erection, placing, anchoring, applying, working to dimension, finishing, curing, protecting, cleaning and similar operation."

N. PROVIDE: The term "provide" means "to furnish and install, complete and ready for intended use."

1.6 UTILITY CONNECTIONS AND INSPECTIONS

A. General: Refer to DIVISION 1 for construction phasing and time increments.

B. Fees and Costs: If, during the course of the construction, a need arises to buy utilities, the Contractor shall pay all fees attendant thereto. If the City or other privately or publicly owned utility piping or electrical cable needs to be extended, relocated, or terminated, the Contractor shall pay all permits and construction/inspection fees associated with that particular work, the costs for which shall be included in the Contract price, including the cost of setting meters.

C. All work performed on this project is under the authority of the State of Texas, however, some local construction fees or construction or inspection permits may be required for new service connections, or modified connections to City or utility company controlled services. Refer to the Division 1 Section of specifications on “Special Conditions” for clarification, or contact the regulating entity directly. Note also that if inspections by personnel of jurisdictions other than TxDOT are specifically required by this document, then the Contractor is responsible for any fees or permits in connection to those requirements.

D. Compliance: The Contractor shall comply in every respect with all requirements of the National Fire Protection Association, the local Fire Department requirements and all utility company requirements. In no case does this relieve the Contractor of the responsibility of complying with these Specifications and Drawings where specified conditions are of higher quality or quantity than the requirements of the above-specified authorities. Where requirements of the Specifications and Drawings are more lenient than the requirements of the above authorities, the Contractor shall make installations in compliance with the requirements of the above authorities with no extra compensation.

1.7 COORDINATION OF THE CONTRACT DOCUMENTS

A. The interrelation of the Specifications, the Drawings, and the schedules are as follows: The Specifications determine the nature and quality of the materials, the Drawings establish the quantities, dimensions and details, and the schedules give the capacities and performance characteristics. If the Contractor requires additional clarification, a request shall be submitted in writing, and a response will be given in writing.

B. Should the Drawings or Specifications conflict within themselves, or with each other, the requirement with the greatest quantity and/or the highest quality shall prevail. The decision of the engineer of record for the system being installed shall be final.

1.8 FUTURE WORK

A. The work described in the drawings shall be performed under this contract. It shall be noted that certain equipment and systems have been sized to anticipate a possible future addition to the building. It is imperative that the Contractor provide and install the equipment and systems as shown in the drawings and schedules, of the sizes, capacities and dimensions indicated.

1.9 SUBMITTALS

A. Submit under provisions of UGC (the "Uniform General Conditions") and Special Conditions Section of the Specifications.

B. Mark all submittal literature to indicate the precise selection of materials and equipment being submitted. Note that if the specific model or material is not indicated in the submittal, and there is more than one choice possible, the submittal may be rejected and resubmittal will be required.

C. Changes in Contract requirements will not be granted and shall not be implied by approval of submitted alternative materials and equipment. Changes will only be effected through the Change Order process, in writing.

D. Proposed Products List: Include all equipment and materials specified in Section 16011.

E. Submit shop drawings and product data grouped to include complete submittals of related systems, products, and accessories in a single submittal.

F. Submit Fabrication Drawings whenever (1) equipment proposed varies in physical size and arrangement from that indicated on the Drawings, thus causing rearrangement of equipment space, (2) where tight spaces require extreme coordination between ductwork, piping, conduit, and other equipment, (3) where called for elsewhere in these Specifications; and (4) where specifically requested by the Design Engineer. Fabrication Drawings shall be made at no additional charge to the Owner or the Design Engineer.

G. All required Fabrication Drawings, except as noted otherwise, shall be prepared at a scale of not less than 1/4" = 1'-0". Fabrication Drawings for ductwork and air handling units shall be drawn at a minimum scale of 3/8" = 1'-0". Submit three blueline prints of each Fabrication Drawing to the Design Engineer for review. Reproduction and submittal of the Construction Documents is not acceptable. The Engineer will review the drawing and return one print with comments.

1.10 SUBSTITUTION OF MATERIALS AND EQUIPMENT

A. It is not the intent of the Drawings and/or Specifications to limit products to any particular Manufacturer or to discriminate against an "APPROVED EQUAL" product produced by another Manufacturer. Some products of a particular Manufacturer may be mentioned to set a definite standard for acceptance and to serve as a reference in comparison with other products. On the other hand, when a Manufacturer's name appears in these Specifications or in the Drawings, it shall not be interpreted that the

Manufacturer is unconditionally acceptable as a provider of equipment for this project. The successful Manufacturer or Supplier shall meet all of the provisions of the appropriate specification(s).

B. The specified products have been used in preparing the Drawings and Specifications and thus establish minimum qualities with which substitutes must be at least equal to be considered acceptable. The burden of proof of equality rests with the Contractor. The decision of the Engineer is final.

C. In the event that the Contractor submits a proposal for a substitution, and the review and negotiation of the substitution (if handled in a timely, expedited manner) results in a delay of the contract work, then a reasonable extension of time for the contract may be allowed.

1.11 MATERIALS AND WORKMANSHIP

A. All materials, unless noted otherwise, shall be new, free from all defects, suitable for the intended use, and of the best quality of their respective kinds.

B. Materials and equipment shall be installed in accordance with the Manufacturer's recommendations and the best standard practice for the type of work involved.

C. All work shall be executed by mechanics and Contractors skilled in their respective trades, and the installations shall provide a neat, precise appearance.

D. Materials and/or equipment damaged in shipment or otherwise damaged prior to installation shall not be repaired at the job site but shall be replaced with new materials and/or equipment.

E. Similar equipment shall be products of the same Manufacturer. Materials shall be new of standard current products of Manufacturer's latest design. All components by the same Manufacturer shall be mechanically and electrically compatible with rating of apparatus in which installed. Similar equipment shall be identical. For example, all panelboards shall be of the Manufacturer and of the same style.

1.12 FLAME SPREAD PROPERTIES OF MATERIALS

A. Materials and adhesives incorporated into this project shall conform to NFPA Standard 255, "Method of Test of Surface Burning Characteristics of Building Materials". The classification shall not exceed a flame spread rating of 25, nor exceed a smoke developed rating of 50, for all materials, adhesives, finishes, etc., specified for each system.

1.13 MANUFACTURER'S RECOMMENDATIONS

A. The Manufacturer's published directions and/or recommendations shall be followed in the delivery, storage, protection, installation, and wiring of all equipment and material. The Contractor shall promptly notify the Engineer, in writing, of any conflict between the requirements of the Contract Documents and the Manufacturers' directions, and shall obtain the Engineer's guidance before proceeding with the work. Should the Contractor

perform any such work that does not comply with the Manufacturers' directions or such instructions from the Owner, the Contractor shall bear all costs arising in connection with the deficiencies.

1.14 SPACE AND EQUIPMENT ARRANGEMENT

A. The size of electrical equipment indicated on the Drawings is approximate and based on the dimensions of a particular Manufacturer. While other Manufacturers may be acceptable, it is the responsibility of the Contractor to determine if the equipment proposed by the Contractor will fit in the space.

B. All equipment shall be installed in a manner to permit access to all surfaces. All nameplates shall be able to be viewed without disassembly.

C. All equipment and piping shall be installed in a manner to provide the greatest amount of clearance for access and maintenance of systems and equipment. Installation of conduit and panels which blocks personnel access to all parts of chases or mechanical spaces is prohibited.

1.15 PROTECTION

A. The Contractor shall at all times take such precautions as may be necessary to properly protect all materials and equipment from damage from the time of delivery until the completion of the work. This shall include the erection of all required temporary shelters and supports to adequately protect any items stored in the open on the site from the weather, the ground and surrounding work; the cribbing of any items above the floor of the construction; and the covering of items in the incomplete building with tarpaulins or other protective covering; the installation of electric heaters in electrical switchgear and similar equipment to prevent moisture damage. Failure on the part of the Contractor to comply with the above will be sufficient cause for the rejection of the items in question.

B. Take particular care not to damage the building structure in performing work. All finished floors and finished surfaces shall be covered to prevent any damage by workers or their tools and equipment during the construction of the building.

1.16 SUPERVISION

A. Each Contractor and Subcontractor shall provide a competent superintendent or foreman for the work of their trade. (Refer also to the Uniform General Conditions for additional information concerning supervision.)

B. It shall be the responsibility of the General to assure that each superintendent studies all Drawings and is familiar with the work to be coordinated with and performed by other trades. The General Contractor shall coordinate the work of all trades and, before material is fabricated or installed, assure that the work will not cause an interference with another trade. Where interferences are encountered, they shall be resolved at the job site by the superintendents involved. Where interferences cannot be resolved without major changes to the Drawings, the matter shall be referred to the Engineer for a ruling. The decision of the Engineer shall be final.

1.17 SITE OBSERVATION

A. Site observation by the Architect, Engineer, Owner or any representative of the Owner, is for the express purpose of verifying compliance by the Contractor with the Contract Documents, and shall not be construed as construction supervision nor indication of approval of the manner or location in which the work is being performed as being a safe practice or place.

B. The safety of the workers on the site is the responsibility of the Contractor. By entering the site, the Contractor, Subcontractors, and their employees relieve the Owner of any responsibility for their safety, and accept complete responsibility for any unsafe acts or procedures which may cause them harm.

1.18 GUARANTEE

A. **The Contractor shall guarantee all labor and materials furnished and installed under this contract for a period of one (1) year from date of FINAL ACCEPTANCE by Owner.** Certain work and materials shall be guaranteed for a longer period when so specified. The guarantee shall cover the repair or replacement without additional cost to the Owner, of any defective material or faulty workmanship.

B. All necessary service to each system, such as adjustment of controls, mechanical repair of equipment and other work requiring specialized training, shall be furnished by the Contractor, at no cost to the Owner, for a period of one (1) year, concurrent with the warranty period specified above. This shall not include repair of damage due to fire unless the fire results from faulty materials or workmanship on the part of the Contractor, storm, vandalism, or other factors entirely beyond the control of the Contractor, nor shall it include such routine service as oiling motors, cleaning or replacing filters, replacing blown fuses (unless caused by defective performance of the equipment), nor any other work not requiring special skill. The above items pertaining to routine servicing of the equipment and motors, cleaning or replacing filters, or replacing fuses are the responsibility of the Owner unless a service agreement is made between the Contractor and the Owner.

C. If the Contractor shall fail to perform under these requirements, then the Uniform and Special General Conditions shall govern any required remedies the Owner may be forced to take.

1.19 CUTTING AND PATCHING

A. General: Provide openings in all new or existing construction indicated in the drawings, or as necessary for the proper installation of all systems included in the project.

B. Methods of cutting: Openings cut through concrete and masonry shall be made with masonry saws and/or core drills and at such locations acceptable to the Construction Inspector and Design Engineer. Impact-type equipment shall not be used except where specifically acceptable to the Design Architect and Engineer. Openings in precast concrete slabs for conduits, outlet boxes, etc., shall be core drilled to exact size.

C. Restoration: All openings shall be finished, closed around penetrating materials as specified, or restored to "as-new" condition under the appropriate Specification Section for the materials involved, and shall match remaining surrounding materials and/or finishes.

D. Masonry: Where openings are cut through masonry walls, provide and install lintels or other structural supports to protect the remaining masonry. Adequate supports shall be provided during the cutting operation to prevent any damage to the masonry occasioned by the operation. All structural members, supports, etc., shall be of the proper size and shape, and shall be installed in a manner acceptable to the Design Engineer.

E. Plaster: All mechanical work in areas containing plaster shall be completed prior to the application of the finish plaster coat. Cutting of finish plaster coat will not be permitted.

F. Special Note: No cutting, boring, or excavating which will weaken the structure shall be undertaken.

G. Refer to Specification Division 2 for requirements governing trenching.

1.20 ROOF PENETRATIONS AND FLASHING

A. Conduit and duct sleeves, pitch pockets, and flashings compatible with the roofing installation shall be provided and installed by a qualified Contractor for all roof penetrations. This shall be the responsibility of the General Contractor.

1.21 OPERATION PRIOR TO COMPLETION

A. When any piece of electrical equipment is operable and it is to the advantage of the Contractor to operate the equipment for a purpose other than testing (for a period longer than one hour), the Contractor may do so, providing that the operation is properly supervised, and the Construction Inspector has given written permission. The warranty period shall not commence until such time as the equipment is operated for the beneficial use of the Owner, or date of substantial completion, whichever occurs first.

B. No equipment shall be operated, even for test purposes, until it has been thoroughly swept and vacuumed clean of dust, dirt and debris.

C. Regardless of whether or not the equipment has or has not been operated, the Contractor shall properly clean the equipment, install clean filters, properly adjust, and complete all deficiency list items before final acceptance by the Owner as described in the following paragraph. The date of acceptance and performance certification shall be the same date.

1.22 CHECKING AND TESTING MATERIALS AND/OR EQUIPMENT

A. Before the work is accepted, an authorized representative of the Manufacturer of the installed materials and/or equipment shall personally inspect the installation and operation of the materials and/or equipment to determine that it is properly installed and in proper operating order. The qualifications of the representative shall be appropriate to the technical requirements of the installation and shall be submitted to the owner for

approval. The decision of the owner concerning the appropriateness of the representative shall be final. Testing and checking shall be accomplished during the course of the work where required by work being concealed, and at the completion of the work otherwise. In addition, the Contractor shall submit to the Design Engineer all close out documents listed in Section 16011.

1.23 CLEANING AND PAINTING

A. All equipment furnished by the mechanical Subcontractors shall be delivered to the job with a suitable factory protective finish. The following materials shall not be painted: copper, galvanized metal, stainless steel, fiberglass, and plastics such as PVC, PVDF, polypropylene, etc.

B. If painting is required, before painting, materials and equipment surfaces shall be thoroughly cleaned of cement, plaster, and other foreign materials, and all oil and grease shall be removed. Such surfaces shall be carefully wiped and all cracks and corners scraped out. Exposed metal work shall be carefully brushed down with steel brushes to remove rust and other spots and left smooth and clean.

C. Equipment nameplates shall be protected from being painted; suitable protection shall be afforded to the plates to prevent their being rendered illegible due to the painting operation, or receiving any overspray or spatter.
   1. All uncovered, unprotected steel supports and hanger rod threads shall be cleaned and painted with two coats of Tropical Paint Co. No. 77-black asphaltic emulsion. Galvanized steel conduit shall not be painted.
   2. The surfaces to be finish painted shall first be prepared as follows:
   3. All ferrous metal surfaces without a protective finish and not galvanized in exposed and concealed areas including chases, and above ceilings shall be painted with two (2) coats of P&L zinc chromate primer as the construction progresses to protect against oxidation and deterioration.

PART 2 - PRODUCTS (Not Used)

PART 3 - EXECUTION

3.1 INSTALLATION METHODS

A. Support: All wiring, cable trays and conduits shall be adequately and properly supported from the building structure by means of hanger rods or clamps fastened to the building structure as herein specified.

B. All conduits, etc., shall be cut accurately to measurements established from the actual building conditions and shall be worked into place without springing or forcing. All conduits run exposed in machinery and equipment rooms shall be installed parallel to the building lines. Conduits run in furred ceilings, etc., shall be similarly installed, unless noted otherwise. Conduits in furred ceilings and in other concealed spaces shall be neatly

grouped and racked. All conduit openings shall be maintained in a sealed condition until the systems are closed with final connections.

C. All openings through all floors, walls, and roofs, etc., regardless of material for the passage of conduit, cable trays, etc., shall be sleeved. All penetrations must pass through sleeves. Sleeves shall be set in new construction before concrete is poured, as cutting holes through any part of the concrete will not be permitted unless acceptable to the Architect/Engineer. Installation of sleeves and the sealing of sleeves shall be the responsibility of the electrical Contractor except roof sleeves.

3.2 REQUIRED INSPECTIONS

A. Prior to the installation of any ceiling material, gypsum, plaster, or acoustical board, the Contractor shall notify the construction inspector so that arrangement can be made for an inspection of the above-ceiling area about to be “sealed” off. The Contractor shall give as much advance notice as possible, but no less than five (5) working days.

B. All above-ceiling areas will be subject to a formal inspection before ceilings are installed, or installation is otherwise concealed from view. All electrical work at and above the ceiling, including items supported by the ceiling grid, such as lighting fixtures, shall be complete and installed in accordance with contract requirements, including power to lighting fixtures, fans, and other powered items and all conduit supports. Adequate lighting shall be provided to permit thorough inspection of all above-ceiling items. The inspection will include representatives of the following: General Contractor and each Subcontractor having work above the ceiling, Engineer(s) of Record, Construction Inspector(s), and the Maintenance Staff. Areas to be included and time of inspection shall be coordinated with the Construction Inspector.

C. The purpose of this inspection is to verify the completeness and quality of the installation of the electrical systems and any other special above ceiling systems. The ceiling supports (tee bar or lath) shall be in place so that access panel and light fixture locations are identifiable and so that clearances and access provisions may be evaluated.

D. No ceiling materials may be installed until the resulting deficiency list from this inspection is satisfied and the Construction Inspector has given approval.

3.3 TESTING

A. Tests for specific systems and equipment are specified in associated specification sections or in the drawings. All tests specified or indicated shall be performed and witnessed by the Owner. All tests shall be individually documented, and the test report for each shall be included in the final documentation submitted to the Owner at the completion of the project. Data shall be delivered to the Design Engineer as specified under “Requirements for Final Acceptance”. The documentation shall include as a minimum:
   1. Contractor firm name, supervisor’s name, and name of personnel performing test
   2. Date and time of beginning of test, and date and time of test completion
   3. Description of equipment or system being tested
   4. Description of test being performed
   5. Description of outcome of test

6. Dated signatures of person performing test, Contractor's supervisor, and Owner's representative, including legibly printed names and titles

B. The Contractor shall make, at no additional cost to the Owner, any tests deemed necessary by the inspection departments having jurisdiction, and in the National Fire Protection Association, ASTM, etc. Standards listed. The Contractor shall provide all equipment, materials, and labor for making such tests. Reasonable amounts of fuel and electrical energy costs for system tests will be paid by the Owner where services are readily available. Where such services are not readily available, the Contractor shall provide all water, electricity or fuel. NOTE THAT SUCH TESTS WILL BE REASONABLY REQUIRED TO CONFIRM THE SPECIFIED OPERATION, CAPACITY, OR DURABILITY OF THE MATERIAL OR EQUIPMENT, AND WILL NOT BE INVOKED UNLESS DEEMED ABSOLUTELY NECESSARY.

C. The Construction Inspector shall be notified in writing at least 5 working days prior to each test and other Specification requirements requiring action on the part of the Construction Inspector. All equipment shall be placed in operation and tested for proper automatic control requirements before the balancing agency starts their work.

D. Insulation resistance test shall be made on each 208 volt feeder conductor after installation. Tests shall be made with a 500 vdc megger. Readings shall be recorded and test reports furnished as described in this section.

E. All defective lamps found during testing shall be replaced.

F. All receptacles and light switches shall be tested to verify they are connected properly.

G. All HVAC motors and line voltage controls shall be checked to verify correct operation.

H. All panelboards shall be inspected prior to installing covers to verify correct wiring connections and color coding procedures.

3.4 TRAINING

A. Prior to final acceptance of the project, Contractor shall provide a minimum of six (6) hours of training for a minimum of four (4) of the Owners personnel, on the operation and maintenance of the existing systems, including normal maintenance procedures and the location and operation of emergency shut down switches, etc. Contractor shall provide complete, written, Manufacturers literature on all electrical systems for each person trained.

END OF SECTION

SECTION 16011

ELECTRICAL SUBMITTAL AND CLOSE OUT DOCUMENTS

PART 1 - GENERAL

1.1 RELATED SECTIONS

A. Section 16060 – Grounding & Bonding

B. Section 16070 – Hangers and Supports

C. Section 16075 – Electrical Identification

D. Section 16123 – Building Wire and Cable

E. Section 16130 – Raceway and Boxes

F. Section 16140 – Wiring Devices

G. Section 16150 – Wiring Connections

H. Section 16235 – Engine Generators

I. Section 16289 – TVSS

J. Section 16411 – Enclosed Switches

K. Section 16442 – Panelboards

L. Section 16491 – Fuses

M. Section 16510 – Interior Luminaires

N. Section 16520 – Exterior Luminaires

O. Section 16530 – Emergency Lighting

P. Section 16710 – Telecommunications

Q. Section 16722 – Gas Monitoring

1.2 WORK INCLUDES

A. The Contractor shall provide equipment submittal data as summarized in 1.3. The complete requirements are listed in the referenced Division 16 section.

B. The Contractor shall provide close out data as summarized in 1.4. The complete requirements are listed in the referenced Division 16 section.

1.3 SUBMITTAL SUMMARY

A. Section 16060 – Grounding and Bonding
1. Product Data: Submit data on grounding electrodes and connections.
2. Test Reports: Provide grounding system test reports.

B. Section 16070 – Hangers and Supports
1. Product Data: Submit Manufacturers catalog data including load capacity.
2. Provide Manufacturer's Installation Instructions.
3. Manufacturer's Certificate: Certify products meet or exceed specified requirements.

C. Section 16075 – Electrical Identification
1. Product Data: Submit Manufacturer’s catalog literature for each product used on the project.
2. Manufacturer's Installation Instructions: Indicate installation instructions, special procedures, and installation.

D. Section 16123 – Building Wire and Cable
1. Product Data: Submit for building wire and cable.

E. Section 16130 – Raceway and Boxes
1. Product Data: Submit for the following:
    a. Flexible metal conduit
    b. Liquid tight flexible metal conduit
    c. Nonmetallic conduit
    d. Raceway fittings
    e. Conduit bodies
    f. Wireway
    g. Pull and junction boxes
2. Manufacturer's Installation Instructions: Submit application conditions and limitations of use stipulated by Product testing agency specified under Regulatory Requirements. Include instructions for storage, handling, protection, examination, preparation, and installation of Product.

F. Section 16140 – Wiring Devices
1. Product Data: Submit Manufacturer's catalog information showing dimensions, colors, and configurations.

G. Section 16150 – Wiring Connections
1. Product Data: Submit wiring device Manufacturer’s catalog information showing dimensions, configurations, and construction.
2. Provide Manufacturer's installation instructions.

H. Section 16235 – Engine Generators
1. Shop Drawings: Indicate electrical characteristics and connection requirements. Include plan and elevation views with overall and interconnection point dimensions, fuel consumption rate curves at various loads, ventilation and combustion air requirements, electrical diagrams including schematic and interconnection diagrams.
2. Product Data: Submit data showing dimensions, weights, ratings, interconnection points, and internal wiring diagrams for engine, generator, control panel, transfer

switch, battery, battery rack, battery charger, exhaust silencer, and vibration isolators.

3. Test Reports: Indicate results of performance testing.
4. Manufacturer's Field Reports: Indicate inspections, findings, and recommendations.

I. Section 16289 – TVSS
   1. Product Data: Submit capacity, dimensions, weights, details, and wiring configuration.
   2. Test Reports:
      a. Indicate Let-Through voltage test data.
      b. Submit spectrum analysis of each unit.
      c. Submit test reports from nationally recognized independent testing laboratory verifying suppressors can survive published surge current rating.
      d. Manufacturer's Installation Instructions: Submit installation instructions and connection requirements.
      e. Manufacturer's Certificate: Certify transient voltage surge suppression device complies with UL 1449 Second Edition Surge Voltage Ratings.

J. Section 16411 – Enclosed Switches
   1. Product Data: Submit switch ratings and enclosure dimensions.

K. Section 16442 – Panelboards
   1. Shop Drawings: Indicate outline and support point dimensions, voltage, main bus ampacity, integrated short circuit ampere rating, circuit breaker and fusible switch arrangement and sizes.
   2. Product Data: Submit catalog data showing specified features of standard products.

L. Section 16491 – Fuses
   1. Product Data: Submit data sheets showing electrical characteristics, including time-current curves.

M. Section 16510 – Interior Luminaires
   1. Shop Drawings: Indicate dimensions and components for each luminaire not standard product of Manufacturer.
   2. Product Data: Submit dimensions, ratings, and performance data.

N. Section 16520 – Exterior Luminaires
   1. Product Data: Submit dimensions, ratings, and performance data.

O. Section 16530 – Emergency Lighting
   1. Product Data: Submit dimensions, ratings, and performance data.

P. Section 16710 – Telecommunications
   1. Prior to ordering any material, provide two (2) copies of complete brochure information on all products for installation on this project. All brochures and specification sheets shall be bound within a three-ring loose leaf binder and organized in the same manner as the Products portion of the Specifications. If more than one product is listed on the same page of the brochure or specification sheet submitted, the intended product or part number shall be clearly indicated or highlighted by the Contractor.

2. Contractor shall submit Proposed Test Procedures and a sample of the printout or test result form, as well as a list of all Test Equipment to be used for cable testing.
3. Contractor shall submit a Proposed Labeling and Cable Identification Scheme describing the outlet labeling, patch panel labeling, fiber patch panel labeling, voice termination labeling, and all cable end labeling procedures and samples.
4. Contractor shall submit all Proposed Firestopping System plans and methods for approval prior to beginning the firestopping portion of the work.

Q. Section 16722 – Gas Monitoring
1. Product Data: Provide Manufacturers data on all equipment and components described herein.
2. Submittal shall include Manufacturer's Installation Instructions and complete system wiring and central control station schematics.

1.4 CLOSEOUT SUBMITTALS: The items summarized below must be complete before the electrical portion of the project will be considered substantially complete. See reference sections for complete details. See section 16010 for complete test reporting procedures.

A. Section 16060 – Grounding and Bonding
1. Project Record Documents: Record actual locations of components and grounding electrodes.
2. Perform ground resistance testing in accordance with IEEE 142.
3. Perform continuity testing in accordance with IEEE 142.
4. When improper grounding is found on receptacles, check receptacles in entire project and correct. Perform retest.
5. All new ground rods shall be tested after installation using a ground rod resistance tester. The maximum resistance for each ground rod shall be no more than 25 ohms, as required by the NEC. After the ground rod resistance test, if the ground rod has a resistance higher than 25 ohms, the Contractor will need to modify the ground system to lower this resistance. To lower the resistance, the Contractor shall drive and interconnect additional ground rods in a triad formation, install longer ground rods or use manufactured, encapsulated electrolyte ground rods to obtain a resistance of 25 ohms or less. Manufactured, electrolyte ground rods shall be equal to Lyncole XIT Grounding Systems. For a multiple ground rod installations, rods shall be spaced 10' apart and #1/0 AWG or larger bare, copper conductors shall be installed underground between rods, minimum 18” below grade. After corrective measures are complete, the new ground rod installation shall be re-tested with a ground rod tester to show that each installation has a total resistance of 25 ohms or less. **Ground rod resistance test results shall be documented, signed by the licensed electrician performing the tests, and submitted to the Owner for approval. These test results shall include ground rod resistance values and the weather and soil conditions present during the tests**.

B. Section 16123 - Building Wire and Cable
1. Test installation after new wiring is completed and when fixtures and equipment have been connected ready for use. Resistance between conductors and between each conductor and ground shall conform to NEC.
2. All wires #1/**0 AWG and larger conductors and service entrance conductors shall pass a 500 volt megger test prior to placing in service. <u>Testing to be witnessed by Owner's representative.</u> Acceptable minimum insulation resistance is 50 megohms**.

C. Section 16235 – Engine Generators
   1. Operation and Maintenance Data: Submit instructions and service manuals for normal operation, routine maintenance, oil sampling and analysis for engine wear, and emergency maintenance procedures.
   2. Before the work is accepted, an authorized representative of the Manufacturer shall personally inspect the installation and operation of the equipment to determine that it is properly installed and in proper operating order. The qualifications of the representative shall be appropriate to the technical requirements of the installation and shall be submitted to the owner for approval. The decision of the owner concerning the appropriateness of the representative shall be final. Testing and checking shall be accomplished during the course of the work where required by work being concealed, and at the completion of the work otherwise. In addition, the Contractor shall submit to the Design Engineer a signed statement from the representative certifying as follows: "I certify that the materials and/or equipment listed below have been personally inspected by the undersigned authorized Manufacturer's representative and is properly installed and operating in accordance with the Manufacturer's recommendations".
   3. Furnish 8 hours of instruction each for two persons, to be conducted at project site with Manufacturer's representative.

D. Section 16411 – Panelboards
   1. Project Record Documents: Record actual locations of panelboards and record actual circuiting arrangements.
   2. Operation and Maintenance Data: Submit spare parts listing; source and current prices of replacement parts and supplies; and recommended maintenance procedures and intervals.

E. Section 16491 – Fuses
   1. Project Record Documents: Record actual sizes, ratings, and locations of fuses.

F. Section 16710 – Telecommunications
   1. Contractor shall maintain one set of drawings on site to continually and accurately record the as-constructed work. The mark-up drawings shall accurately indicate locations of all equipment, pull-boxes, conduits, cable types, cable routing, cable labeling, outlet locations, and outlet labeling. All record drawings shall be maintained and updated daily and made available for inspection at any time during the course of the work by the Owner or the Owner's Representative. At project completion Contractor shall deliver drawings and documentation of the project, in both hard copy and in AutoCAD V12 or later format, to minimally include:
   2. As-built connectivity diagram indicating pathways and utilization of duct bank system for fiber optic cable connectivity.
   3. As-built telecommunications floor plans of the facility with entire contracted cable and outlet placement clearly depicted.
   4. As-built elevations of all termination fields describing cable and outlet location labeling scheme.
   5. As-built logical riser diagram describing connectivity and cable sizes for both telecommunications and grounding cabling systems.
   6. Cable test results submitted in both hard copy and magnetic format along with viewing software from the tester Manufacturer. Hard copy to be bound within loose-leaf binder neatly organized according to the test type and medium as identified in the Testing portion of this Specification.

G. Section 16722 – Gas Monitoring

1. Calibrate monitoring system per Manufacturer's recommendations. The Manufacturer's authorized technical representative shall be present during all tests and inspections. The Manufacturer's authorized representative shall provide supervision of final connections to the system panel, perform a complete functional test of the system and submit a written report to the Contractor attesting to the proper operation of the completed system. This report shall be a part of the final documents submitted to the owner.
2. The Manufacturer's authorized representative shall perform an eight (8) hour training session where the representative shall instruct and train a minimum of six (6) TxDOT personnel and, if applicable, local Fire Department personnel in the operation of the system. At the training session, the Manufacturer's authorized representative shall provide a complete written operating and maintenance manual that clearly describes the system, its operation, and any maintenance requirements. It shall also have a clearly understandable maintenance schedule and a complete parts list for all components of the system(s).

PART 2 - PRODUCTS (Not Used)

PART 3 - EXECUTION (Not Used)

END OF SECTION

SECTION 16060

GROUNDING AND BONDING

PART 1 - GENERAL

1.1 SUMMARY

A. Section Includes:
   1. Rod electrodes
   2. Wire
   3. Mechanical connectors
   4. Exothermic connections

1.2 RELATED SECTIONS

A. Section Includes: Section 16010 – Basic Electrical Requirements

1.3 REFERENCES

A. Institute of Electrical and Electronics Engineers:
   1. IEEE 142 - Recommended Practice for Grounding of Industrial and Commercial Power Systems
   2. IEEE 1100 - Recommended Practice for Powering and Grounding Electronic Equipment

B. National Fire Protection Association:
   1. NFPA 70 - National Electrical Code

1.4 SYSTEM DESCRIPTION

A. Grounding systems use the following elements as grounding electrodes:
   1. Metal underground water pipe
   2. Building steel
   3. Rod electrode

1.5 PERFORMANCE REQUIREMENTS

A. Grounding System Resistance: Per NEC, 25 ohms maximum for a single grounding electrode or 25 ohms maximum for multiple electrodes that are connected together.

1.6 SUBMITTALS

A. Product Data: Submit data on grounding electrodes and connections.

B. Test Reports: Provide grounding system test reports per Part 3.4.

1.7 CLOSEOUT SUBMITTALS

A. Project Record Documents: Record actual locations of components and grounding electrodes.

1.8 QUALITY ASSURANCE

A. Provide grounding materials conforming to requirements of NEC, IEEE 142, and UL labeled.

1.9 QUALIFICATIONS

A. Manufacturer: Company specializing in manufacturing Products specified in this section with minimum three years experience.

B. Installer: Company specializing in performing work of this section with minimum 3 years experience.

1.10 DELIVERY, STORAGE, AND HANDLING

A. Accept materials on site in original factory packaging, labeled with Manufacturer's identification.

B. Protect from weather and construction traffic, dirt, water, chemical, and mechanical damage, by storing in original packaging.

1.11 COORDINATION

A. Complete grounding and bonding of building reinforcing steel prior concrete placement.

PART 2 - PRODUCTS

2.1 ROD ELECTRODES

A. Manufacturers:
1. Copperweld, Inc.
2. Erico, Inc.
3. O-Z Gedney Co.
4. Thomas & Betts, Electrical

B. Product Description:
1. Material: Copper-clad steel
2. Diameter: 3/4 inch
3. Length: 10 feet

C. Connector: Connectors for exothermic welded connections only.

2.2 WIRE

A. Material: Stranded copper

B. Grounding Electrode Conductor: Copper conductor, insulated

C. Bonding Conductor: Copper conductor, insulated

2.3 MECHANICAL CONNECTORS

A. Manufacturers:
1. Erico, Inc.
2. ILSCO Corporation
3. O-Z Gedney Co.
4. Thomas & Betts, Electrical

B. Description: Bronze connectors, suitable for grounding and bonding applications, in configurations required for particular installation.

2.4 EXOTHERMIC CONNECTIONS

A. Manufacturers:
1. Cadweld, Erico, Inc.
2. Copperweld, Inc.
3. ILSCO Corporation
4. O-Z Gedney Co.
5. Thomas & Betts, Electrical

B. Product Description: Exothermic materials, accessories, and tools for preparing and making permanent field connections between grounding system components.

PART 3 - EXECUTION

3.1 EXAMINATION

A. Verify final backfill and compaction has been completed before driving rod electrodes.

3.2 PREPARATION

A. Remove surface contaminants at connection points.

3.3 INSTALLATION

A. Install in accordance with IEEE 142.

B. Install rod electrodes at locations as indicated on Drawings. Install additional rod electrodes to achieve specified resistance to ground.

C. Install grounding and bonding conductors concealed from view.

D. Bond together metal siding not attached to grounded structure; bond to ground.

E. Install isolated grounding conductor for circuits supplying personal computers in accordance with IEEE 1100.

F. Equipment Grounding Conductor: Install separate, insulated conductor within each feeder and branch circuit raceway. Terminate each end on suitable lug, bus, or bushing.

G. Permanently ground entire light and power system in accordance with NEC, including service equipment, distribution panels, lighting panel boards, switch and starter enclosures, motor frames, grounding type receptacles, and other exposed non-current carrying metal parts of electrical equipment.

H. Install branch circuits feeding isolated ground receptacles with separate insulated grounding conductor, connected only at isolated ground receptacle ground terminals, and at isolated ground bus of serving panel.

I. Permanently attach equipment and grounding conductors prior to energizing equipment.

3.4 FIELD QUALITY CONTROL

A. Perform ground resistance testing in accordance with IEEE 142.

B. Perform continuity testing in accordance with IEEE 142.

C. When improper grounding is found on receptacles, check receptacles in entire project and correct. Perform retest.

D. All new ground rods shall be tested after installation using a ground rod resistance tester. The maximum resistance for each ground rod shall be no more than 25 ohms, as required by the NEC. After the ground rod resistance test, if the ground rod has a resistance higher than 25 ohms, the Contractor will need to modify the ground system to lower this resistance. To lower the resistance, the Contractor shall drive and interconnect additional ground rods in a triad formation, install longer ground rods or use manufactured, encapsulated electrolyte ground rods to obtain a resistance of 25 ohms or less. Manufactured, electrolyte ground rods shall be equal to Lyncole XIT Grounding Systems. For a multiple ground rod installations, rods shall be spaced 10' apart and #1/0 AWG or larger bare, copper conductors shall be installed underground between rods, minimum 18” below grade. After corrective measures are complete, the new ground rod installation shall be re-tested with a ground rod tester to show that each installation has a total resistance of 25 ohms or less. **Ground rod resistance test results shall be documented, signed by the licensed electrician performing the tests, and submitted to the Owner for approval. These test results shall include ground rod resistance values and the weather and soil conditions present during the tests**.

END OF SECTION

SECTION 16070

ELECTRICAL HANGERS AND SUPPORTS

PART 1 - GENERAL

1.1 SUMMARY

A. Section Includes:
1. Conduit supports
2. Formed steel channel
3. Spring steel clips
4. Sleeves
5. Mechanical sleeve seals
6. Equipment bases and supports

1.2 RELATED SECTIONS

A. Division 3 - Cast-In-Place Concrete: Product requirements for concrete for placement by this section.

1.3 REFERENCES

A. National Fire Protection Association:
1. NFPA 70 - National Electrical Code

1.4 SUBMITTALS

A. Shop Drawings: Indicate system layout with location and detail of trapeze hangers.

B. Product Data: Submit Manufacturers catalog data including load capacity.

C. Manufacturer's Installation Instructions: Provide complete Manufacturer’s installation instructions.

D. Manufacturer's Certificate: Certify products meet or exceed specified requirements.

1.5 QUALIFICATIONS

A. Manufacturer: Company specializing in manufacturing Products specified in this section with minimum three years experience.

B. Installer: Company specializing in performing work of this section with minimum 3 years experience.

1.6 DELIVERY, STORAGE, AND HANDLING

A. Accept materials on site in original factory packaging, labeled with Manufacturer's identification.

B. Protect from weather and construction traffic, dirt, water, chemical, and mechanical damage, by storing in original packaging.

PART 2 - PRODUCTS

2.1 CONDUIT SUPPORTS

A. Manufacturers:
1. Allied Tube & Conduit Corp.
2. Electroline Manufacturing Company
3. O-Z Gedney Co.

B. Hanger Rods: Threaded high tensile strength galvanized carbon steel with free running threads.

C. Beam Clamps: Malleable Iron, with tapered hole in base and back to accept either bolt or hanger rod. Set screw: hardened steel.

D. Conduit clamps for trapeze hangers: Galvanized steel, notched to fit trapeze with single bolt to tighten.

E. Conduit clamps - general purpose: One hole malleable iron for surface mounted conduits.

F. Cable Ties: High strength nylon temperature rated to 185 degrees F. Self locking.

2.2 FORMED STEEL CHANNEL

A. Manufacturers:
1. Allied Tube & Conduit Corp.
2. B-Line Systems
3. Midland Ross Corporation, Electrical Products Division
4. Unistrut Corp.

B. Product Description: Galvanized 12 gage thick steel. With holes 1-1/2 inches on center.

2.3 SLEEVES

A. Sleeves for conduits through Non-fire Rated Floors: 18 gage thick galvanized steel.

B. Sleeves for conduits through Non-fire Rated Beams, Walls, Footings, and Potentially Wet Floors: Steel pipe or 18 gage thick galvanized steel.

2.4 MECHANICAL SLEEVE SEALS

A. Manufacturers:
1. Thunderline Link-Seal, Inc.
2. NMP Corporation

B. Product Description: Modular mechanical type, consisting of interlocking synthetic rubber links shaped to continuously fill annular space between object and sleeve, connected with bolts and pressure plates causing rubber sealing elements to expand when tightened, providing watertight seal and electrical insulation.

PART 3 - EXECUTION

3.1 EXAMINATION

A. Verify openings are ready to receive sleeves.

3.2 INSTALLATION - HANGERS AND SUPPORTS

A. Anchors and Fasteners:
1. Concrete Structural Elements: Provide expansion anchors or powder actuated anchors.
2. Steel Structural Elements: Provide beam clamps.
3. Concrete Surfaces: Provide self-drilling anchors and expansion anchors.
4. Solid Masonry Walls: Provide expansion anchors.
5. Sheet Metal: Provide sheet metal screws.
6. Wood Elements: Provide wood screws.

B. Install conduit and raceway support and spacing in accordance with NEC.

C. Do not fasten supports to pipes, ducts, mechanical equipment, or conduit.

D. Install multiple conduit runs on common hangers.

E. Supports:
1. Fabricate supports from structural steel or formed steel channel. Install hexagon head bolts to present neat appearance with adequate strength and rigidity. Install spring lock washers under nuts.
2. Install surface mounted cabinets and panelboards with minimum of four anchors.
3. In wet and damp locations install steel channel supports to stand cabinets and panelboards 1 inch off wall.

3.3 INSTALLATION - EQUIPMENT BASES AND SUPPORTS

A. Provide housekeeping pads of concrete, minimum 3-1/2 inches thick and extending 6 inches beyond supported equipment.

B. Using templates furnished with equipment, install anchor bolts, and accessories for mounting and anchoring equipment.

3.4 INSTALLATION - SLEEVES

A. Exterior watertight entries: Seal with adjustable interlocking rubber links.

B. Conduit penetrations not required to be watertight: Sleeve and fill with silicon foam.

C. Set sleeves in position in forms. Provide reinforcing around sleeves.

D. Size sleeves large enough to allow for movement due to expansion and contraction. Provide for continuous insulation wrapping.

E. Extend sleeves through floors 1 inch above finished floor level. Caulk sleeves.

F. Where conduit or raceway penetrates floor, ceiling, or wall, close off space between conduit or raceway and adjacent work with stuffing insulation and caulk airtight. Provide close fitting metal collar or escutcheon covers at both sides of penetration.

G. Install chrome plated steel escutcheons at finished surfaces.

3.5 PROTECTION OF FINISHED WORK

A. Protect adjacent surfaces from damage by material installation.

END OF SECTION

SECTION 16075

ELECTRICAL IDENTIFICATION

PART 1 - GENERAL

1.1 SUMMARY

A. Section Includes:
1. Nameplates
2. Adhesive signs
3. Wire markers
4. Conduit markers
5. Underground Warning Tape

1.2 RELATED SECTIONS

A. Section 16010 – Basic Electrical Requirements

1.3 SUBMITTALS

A. Product Data:
1. Submit Manufacturer’s catalog literature for each product used on the project.

B. Manufacturer's Installation Instructions: Indicate installation instructions, special procedures, and installation.

1.4 QUALIFICATIONS

A. Manufacturer: Company specializing in manufacturing Products specified in this section with minimum three years experience.

B. Installer: Company specializing in performing Work of this section with minimum three years experience.

1.5 DELIVERY, STORAGE, AND HANDLING

A. Accept identification products on site in original containers. Inspect for damage.

B. Protect from weather and construction traffic, dirt, water, chemical, and mechanical damage, by storing in original wrapping.

1.6 NAMEPLATES

A. Product Description: Laminated three-layer plastic with engraved white letters on a black background color.

B. Letter Size:
1. 1/8 inch high letters for identifying individual equipment and loads.

2. ¼ inch high letters for identifying grouped equipment and loads.

C. Minimum nameplate thickness: 1/8 inch.

1.7 ADHESIVE WARNING SIGNS

A. Product Description: Sized as noted on the drawings. Pressure-Sensitive Vinyl with adhesive backing, 4- mil thick, white background with black lettering, OSHA header color as noted by the sign type, rated for outdoor use, fade resistant in sunlight, flexible down to -40° F.

1.8 WIRE MARKERS

A. Description: Split sleeve, or tubing type wire markers or other standard wire marking system as approved by the Engineer.

B. Legend:
1. Power and Lighting Circuits: Branch circuit or feeder number as indicated on Drawings.
2. Control Circuits: Control wire number as indicated Drawings.

1.9 CONDUIT AND RACEWAY MARKERS

A. Description: Labels fastened with adhesive.

B. Color:
1. 208 Volt System: Black lettering on white background
2. Telephone System: Blue lettering on white background

C. Legend:
1. 208 Volt System: 208 VOLTS
2. Telephone System: TELEPHONE

1.10 UNDERGROUND WARNING TAPE

A. Description: Minimum 4 or 6 inch wide plastic tape, detectable type, colored red with suitable warning legend describing buried electrical lines.

1.11 PREPARATION

A. Degrease and clean surfaces to receive adhesive for identification materials.

1.12 INSTALLATION

A. Install identifying devices after completion of painting.

B. Nameplate Installation:
1. Install nameplate parallel to equipment lines.
2. Install nameplate for each electrical distribution and control equipment enclosure with corrosive-resistant mechanical fasteners.

3. Install nameplates for each control panel and major control components located outside panel with corrosive-resistant mechanical fasteners.
4. Secure nameplate to equipment front using screws.
5. Secure nameplate to inside surface of door on recessed panel board in finished locations.
6. Each nameplate shall include the equipment name or designation, the voltage, the phase and the state the source panel of the feeder to the equipment in a statement that reads “FEEDS FROM PANEL __”.
7. Install nameplates for the following:
    a. Main Service Disconnect Device
    b. Switchboards
    c. Panel boards
    d. Transformers
    e. Service Disconnect Devices for equipment
    f. Individual Circuit Breaker enclosures
    g. Current Transformer enclosures
    h. Other enclosures as noted on the drawings or as directed by the Owner

C. Junction Box Labeling:
1. All junction and pull boxes 4” square or smaller shall be labeled with the panel number and the circuit numbers contained in the box. This labeling shall be performed by legibly writing the information on the box cover with a black, indelible marker.

D. Wire Marker Installation:
1. Install wire marker for each conductor (hot wires and neutral wires) at panel boards, load centers, wireways, pull boxes, junction boxes, and at each load circuit connection point.
2. Mark data cabling at each end. Install additional marking at accessible locations along the cable run.
3. Install labels at data outlets identifying patch panel and port designation as indicated on Drawings.

E. Underground Warning Tape Installation:
1. Install underground warning tape along length of each underground conduit, raceway, or cable 6 to 8 inches below finished grade, directly above buried conduit, raceway, or cable. Install warning tape with writing facing up.

END OF SECTION

SECTION 16123

BUILDING WIRE AND CABLE

PART 1 - GENERAL

1.1 SUMMARY

A. Section includes building wire and cable and wiring connectors and connections.

1.2 RELATED SECTIONS

A. Section 16010 – Basic Electrical Requirements

1.3 SYSTEM DESCRIPTION

A. Product Requirements: Provide products as follows:
   1. Solid conductor for feeders and branch circuits 10 AWG and smaller
   2. Stranded conductors for control circuits
   3. Conductor not smaller than 12 AWG for power and lighting circuits
   4. Conductor not smaller than 12 AWG for line voltage control circuits
   5. 10 AWG conductors for 20 ampere, 120 volt branch circuits longer than 150 feet

B. Wiring Methods: Provide the following wiring methods:
   1. Concealed Dry Interior Locations: Use only Type THHN/THWN insulation, in raceway
   2. Exposed Dry Interior Locations: Use only Type THHN/THWN insulation, in raceway
   3. Above Accessible Ceilings: Use only Type THHN/THWN insulation, in raceway
   4. Wet or Damp Interior Locations: Use only Type THHN/THWN insulation, in raceway
   5. Exterior Locations: Use only Type THHN/THWN insulation, in raceway
   6. Underground Locations: Use only Type THHN/THWN insulation, in raceway

1.4 SUBMITTALS

A. Product Data: Submit for building wire and cable.

1.5 QUALIFICATIONS

A. Manufacturer: Company specializing in manufacturing products specified in this section with minimum three years experience.

1.6 FIELD MEASUREMENTS

A. Verify field measurements are as indicated on Drawings.

1.7 COORDINATION

A. Where wire and cable destination is indicated and routing is not shown, determine routing and lengths required.

1.8 BUILDING WIRE

A. Manufacturers:
   1. Diamond Wire & Cable Co.
   2. Essex Group Inc.
   3. General Cable Co.
   4. Engineer approved equal

B. Product Description: Single conductor insulated wire.

C. Conductor: Copper.

D. Insulation: NFPA 70; THHN/THWN insulation.

PART 2 - EXECUTION

2.1 EXAMINATION

A. Verify interior of building has been protected from weather.

B. Verify mechanical work likely to damage wire and cable has been completed.

C. Verify raceway installation is complete and supported.

2.2 PREPARATION

A. Completely and thoroughly swab raceway before installing wire.

2.3 INSTALLATION

A. Route wire and cable to meet Project conditions.

B. All electrical wiring and cable, including HVAC control and thermostat cables, shall be installed in conduit or other approved raceway.

C. Neatly train and lace wiring inside boxes, equipment, and panel boards.

D. Identify and color code wire and cable under provisions of Section 16075. Identify each conductor with its circuit number or other designation indicated.

E. Special Techniques--Building Wire in Raceway:
   1. Pull conductors into raceway at same time.
   2. Install building wire 4 AWG and larger with pulling equipment.
   3. Use pulling compound to install wiring in raceways.

F. Special Techniques - Wiring Connections:
   1. Clean conductor surfaces before installing lugs and connectors.
   2. Make splices, taps, and terminations to carry full ampacity of conductors with no perceptible temperature rise.
   3. Tape uninsulated conductors and connectors with electrical tape to 150 percent of insulation rating of conductor.
   4. Install split bolt connectors for copper conductor splices and taps, 6 AWG and larger.
   5. Install solderless pressure connectors with insulating covers for copper conductor splices and taps, 8 AWG and smaller.
   6. Install insulated spring wire connectors with plastic caps for copper conductor splices and taps, 10 AWG and smaller.
   7. Install solid conductor for feeders and branch circuits 10 AWG and smaller.

2.4 WIRE COLOR

A. General:
   1. For wire sizes 10 AWG and smaller, install wire colors in accordance with the following:
      a. Black, red, and blue for circuits at 120/208 volts single or three phase, wye systems.
      b. Three-way and four-way switch travelers shall be purple or lavender. Switch leg conductors shall be color coded different from the traveler conductors and the phase conductors of the system. The color used for switch leg conductors shall be the same throughout the project. The color used for traveler conductors shall be the same throughout the project.
   2. For wire sizes 8 AWG and larger, identify wire with colored tape at terminals, splices and boxes. Colors are as follows:
      a. Black, red, and blue for circuits at 120/208 volts single or three phase.

B. Neutral Conductors: White or gray per NEC. When two or more neutrals are located in one conduit, individually identify each with proper circuit number, or use gray wire for one or more of the neutrals.

C. Branch Circuit Conductors: Install three or four wire home runs with each phase uniquely color coded per Part A above.

D. Feeder Circuit Conductors: Uniquely color code each phase per Part A above.

E. Ground Conductors:
   1. For 6 AWG and smaller: Green.
   2. For 4 AWG and larger: Identify with green tape at both ends and visible points including junction boxes.

END OF SECTION

SECTION 16130

RACEWAY AND BOXES

PART 1 - GENERAL

1.1 SUMMARY

A. Project Identification Section includes conduit and tubing, surface raceways, wireways, outlet boxes, pull and junction boxes, and handholes.

1.2 RELATED SECTIONS

A. Section 16010 – Basic Electrical Requirements

B. Section 16060 - Grounding and Bonding

C. Section 16070 - Electrical Hangers and Supports

D. Section 16075 - Electrical Identification

1.3 REFERENCES

A. American National Standards Institute:
1. ANSI C80.1 - Rigid Steel Conduit, Zinc Coated
2. ANSI C80.3 - Specification for Electrical Metallic Tubing, Zinc Coated

B. National Electrical Manufacturers Association:
1. NEMA 250 - Enclosures for Electrical Equipment (1000 Volts Maximum)
2. NEMA FB 1 - Fittings, Cast Metal Boxes, and Conduit Bodies for Conduit and Cable Assemblies
3. NEMA OS 1 - Sheet Steel Outlet Boxes, Device Boxes, Covers, and Box Supports
4. NEMA RN 1 - Polyvinyl Chloride (PVC) Externally Coated Galvanized Rigid Steel Conduit and Intermediate Metal Conduit
5. NEMA TC 2 - Electrical Polyvinyl Chloride (PVC) Tubing and Conduit
6. NEMA TC 3 - PVC Fittings for Use with Rigid PVC Conduit and Tubing

1.4 SYSTEM DESCRIPTION

A. Raceway and boxes located as indicated on Drawings, and at other locations required for splices, taps, wire pulling, equipment connections, and compliance with regulatory requirements. Raceway and boxes are shown in approximate locations unless dimensioned. Provide raceway to complete wiring system.

B. Underground More than 5 feet outside Foundation Wall: Schedule 40 PVC, nonmetallic conduit unless noted otherwise on the drawings. Provide cast metal boxes or nonmetallic handholes or other pull boxes as scheduled on the drawings.

C. Underground within 5 feet from Foundation Wall or edge of paving: Provide corrosion protected, rigid steel conduit or plastic coated rigid steel conduit unless noted otherwise on the drawings. Provide pull boxes as noted on the drawings.

D. In or Under Slab on Grade: Provide corrosion protected rigid steel conduit or plastic coated rigid steel conduit. Provide cast metallic boxes.

E. Outdoor Locations, Above Grade: Provide rigid steel conduit unless specifically noted otherwise on the drawings. Provide cast metal outlet, pull, and junction boxes.

F. In Slab Above Grade: Provide corrosion protected rigid steel conduit or Schedule 40 PVC nonmetallic conduit. Provide cast boxes.

G. Wet and Damp Locations: Provide rigid steel conduit unless specifically noted otherwise on the drawings. Provide cast metal outlet, junction, and pull boxes. Provide flush mounting outlet box in finished areas.

H. Concealed Dry Locations: Provide electrical metallic tubing. Provide sheet-metal boxes. Provide flush mounting outlet box in finished areas. Provide hinged enclosure for pull boxes larger than 4” square.

I. Exposed Dry Locations: Provide electrical metallic tubing. In shop area provide rigid metal conduit in all areas below 8 feet above finished floor. Provide sheet-metal boxes. Provide flush mounting outlet box in finished areas. Provide hinged enclosure for pull boxes larger that 4” square.

1.5 DESIGN REQUIREMENTS

A. Minimum Raceway Size: ¾ inch unless otherwise specified.

B. Minimum Underground Raceway Size: 1” unless otherwise specified.

1.6 SUBMITTALS

A. Product Data: Submit for the following:
1. Metal conduit, all types
2. Flexible metal conduit
3. Liquid tight flexible metal conduit
4. Nonmetallic conduit
5. Raceway fittings, all types
6. Conduit bodies
7. Wireway
8. Pull and junction boxes

B. Manufacturer's Installation Instructions: Submit application conditions and limitations of use stipulated by Product testing agency specified under Regulatory Requirements. Include instructions for storage, handling, protection, examination, preparation, and installation of Product.

1.7 DELIVERY, STORAGE, AND HANDLING

A. Protect conduit from corrosion and entrance of debris by storing above grade. Provide appropriate covering.

B. Protect PVC conduit from sunlight.

1.8 COORDINATION

A. Coordinate installation of outlet boxes for equipment connected under Section 16150.

B. Coordinate mounting heights, orientation and locations of outlets mounted above counters, benches, and backsplashes.

PART 2 - PRODUCTS

2.1 METAL CONDUIT

A. Rigid Steel Conduit: ANSI C80.1

B. Fittings and Conduit Bodies: NEMA FB 1 all steel threaded fittings. Do not use thread-less connectors for rigid steel conduit.

2.2 PVC COATED METAL CONDUIT

A. Product Description: NEMA RN 1; rigid steel conduit with external PVC coating, 20 mil thick.

B. Fittings and Conduit Bodies: NEMA FB 1; steel fittings with external PVC coating to match conduit.

2.3 FLEXIBLE METAL CONDUIT

A. Product Description: Interlocked steel construction.

B. Fittings: NEMA FB 1.

2.4 LIQUID-TIGHT FLEXIBLE METAL CONDUIT

A. Product Description: Interlocked steel construction with PVC jacket, type LFMC.

B. Fittings: NEMA FB 1

2.5 ELECTRICAL METALLIC TUBING (EMT)

A. Product Description: ANSI C80.3; galvanized tubing.

B. Fittings and Conduit Bodies: NEMA FB 1; steel compression type only. **Do not use set screw fittings.**

2.6 NON-METALLIC CONDUIT

A. Product Description: NEMA TC 2; Schedule 40 PVC or Schedule 80 PVC as noted on the drawings.

B. Fittings and Conduit Bodies: NEMA TC 3.

2.7 SURFACE METAL RACEWAY

A. Product Description: Sheet metal channel with fitted cover, suitable for use as surface metal raceway.

B. Finish: Gray enamel.

C. Fittings, Boxes, and Extension Rings: Furnish Manufacturer's standard accessories; match finish on raceway.

2.8 OUTLET BOXES

A. Sheet Metal Outlet Boxes: NEMA OS 1, galvanized steel.
1. Luminaires and Equipment Supporting Boxes: Rated for weight of equipment supported; furnish 1/2 inch male fixture studs where required.
2. Concrete Ceiling Boxes: Concrete type.

B. Cast Boxes: NEMA FB 1, Type FD, cast ferroalloy. Furnish gasketed cover by box Manufacturer. Furnish threaded hubs.

C. Wall Plates for Finished Areas: As specified in Section 16140.

D. Wall Plates for Unfinished Areas: As specified in Section 16140.

E. Wall Plates for Exterior Areas: Furnish covers with gaskets. Furnish with “in-use” covers.

PART 3 - EXECUTION

3.1 EXAMINATION

A. Verify outlet locations and routing and termination locations of raceway prior to rough-in.

3.2 INSTALLATION

A. Ground and bond raceway and boxes in accordance with Section 16060.

B. Fasten raceway and box supports to structure and finishes.

C. Identify raceway and boxes in accordance with Section 16075.

D. Arrange raceway and boxes to maintain headroom and present neat appearance.

3.3 INSTALLATION - RACEWAY

A. Raceway routing is shown in approximate locations unless dimensioned. Route to complete wiring system.

B. Arrange raceway supports to prevent misalignment during wiring installation.

C. Support raceway using coated steel or malleable iron straps, lay-in adjustable hangers, clevis hangers, and split hangers in accordance with Section 16070.

D. Group related raceway; support using conduit rack. Construct rack using steel channel.

E. Do not support raceway with wire or perforated pipe straps. Remove wire used for temporary supports

F. Do not attach raceway to ceiling support wires or other piping systems.

G. Route exposed raceway parallel and perpendicular to walls.

H. Route raceway installed above accessible ceilings parallel and perpendicular to walls.

I. Maximum of 6’ length for above ceiling, flexible raceway connections to light fixtures.

J. Maximum of 2’ length for final, flexible raceway connection to equipment.

K. Route conduit in and under slab from point-to-point.

L. Maintain clearance between raceway and piping for maintenance purposes.

M. Maintain 12 inch clearance between raceway and surfaces with temperatures exceeding 104 degrees F.

N. Cut conduit square using saw or pipe cutter; de-burr cut ends.

O. Bring conduit to shoulder of fittings; fasten securely.

P. Join nonmetallic conduit using cement as recommended by Manufacturer. Wipe nonmetallic conduit dry and clean before joining. Apply full even coat of cement to entire area inserted in fitting. Allow joint to cure for minimum 20 minutes.

Q. Install conduit hubs or sealing locknuts to fasten conduit to sheet metal boxes in damp and wet locations and to cast boxes.

R. Install no more than equivalent of four 90 degree bends between boxes. Install conduit bodies to make sharp changes in direction, as around beams.

S. Avoid moisture traps; install junction box with drain fitting at low points in conduit system.

T. Install fittings to accommodate expansion and deflection where raceway crosses control and expansion joints.

U. Install suitable pull string or cord in each empty raceway except sleeves and nipples.

V. Install suitable caps to protect installed conduit against entrance of dirt and moisture.

W. Surface Raceway: Install flat-head screws, clips, and straps to fasten raceway channel to surfaces; mount plumb and level. Install insulating bushings and inserts at connections to outlets and corner fittings.

X. Close ends and unused openings in wireway.

3.4 INSTALLATION - BOXES

A. Install wall mounted boxes at elevations to accommodate mounting heights as indicated on Drawings or as specified in section for outlet device.

B. Install flush mounted outlet and fixture boxes for all interior or exterior devices or fixtures installed in finished walls and ceilings. Surface boxes will only be allowed in unfinished, open structure areas.

C. Adjust box location prior to rough-in to accommodate intended purpose.

D. Orient boxes to accommodate wiring devices oriented as specified in Section 16140.

E. Install pull boxes and junction boxes above accessible ceilings and in unfinished areas only.

F. In Accessible Ceiling Areas: Install outlet and junction boxes no more than 6 inches from ceiling access panel or from removable recessed luminaire.

G. Locate flush mounting box in masonry wall to require cutting of masonry unit corner only. Coordinate masonry cutting to achieve neat opening.

H. Do not install flush mounting box back-to-back in walls; install with minimum 6 inches separation. Install with minimum 24 inches separation in acoustic rated walls.

I. Secure flush mounting box to interior wall and partition studs. Accurately position to allow for surface finish thickness.

J. Install stamped steel bridges to fasten flush mounting outlet box between studs.

K. Install flush mounting box without damaging wall insulation or reducing its effectiveness.

L. Install adjustable steel channel fasteners for hung ceiling outlet box.

M. Do not fasten boxes to ceiling support wires or other piping systems.

N. Support boxes independently of conduit.

O. Install gang box where more than one device is mounted together. Do not use sectional box.

P. Install gang box with plaster ring for single device outlets.

Q. Install large enclosures with hinged covers so that cover can be opened a minimum of 90 degrees without obstructions and so that all cover clamps and screws are accessible.

3.5 INTERFACE WITH OTHER PRODUCTS

A. Route conduit through roof openings for piping and ductwork or through suitable roof jack with pitch pocket.

B. Locate outlet boxes to allow luminaires positioned as indicated on reflected ceiling plan.

C. Align adjacent wall mounted outlet boxes for switches, thermostats, and similar devices.

3.6 ADJUSTING

A. Adjust flush-mounting outlets to make front flush with finished wall material.

B. Install knockout closures in unused openings in boxes.

3.7 CLEANING

A. Clean interior of boxes to remove dust, debris, and other material.

B. Clean exposed surfaces and restore finish.

END OF SECTION

SECTION 16140

ELECTRICAL WIRING DEVICES

PART 1 - GENERAL

1.1 SUMMARY

A. Section includes wall switches; receptacles; multi outlet assembly; and device plates and decorative box covers.

B. Related Sections:
1. Section 16010 – Basic Electrical Requirements
2. Section 16130 - Raceway and Boxes: Outlet boxes for wiring devices

1.2 REFERENCES

A. National Electrical Manufacturers Association:
1. NEMA WD 1 - General Requirements for Wiring Devices
2. NEMA WD 6 - Wiring Devices-Dimensional Requirements

1.3 SUBMITTALS

A. Product Data: Submit Manufacturer's catalog information showing dimensions, colors, and configurations.

1.4 QUALIFICATIONS

A. Manufacturer: Company specializing in manufacturing products specified in this section with minimum three years experience.

PART 2 - PRODUCTS

2.1 WALL SWITCHES

A. Manufacturers:
1. Hubbell
2. Pass and Seymour
3. Leviton

B. Product Description: NEMA WD 1, Heavy-Duty AC only general-use snap switch.

C. Body and Handle: Ivory plastic with toggle handle unless alternate color is specified on the drawings.

D. Ratings: Match branch circuit and load characteristics.

2.2 RECEPTACLES

A. Manufacturers:

1. Hubbell
2. Pass and Seymour
3. Leviton

B. Product Description: NEMA WD 1, Heavy-duty general use receptacle.

C. Device Body: Ivory plastic unless alternate color is specified on the drawings. Provide ivory colored duplex outlets with orange dot at dedicated, isolated ground electrical outlets.

D. Convenience Receptacle: 20 amp, Type 5-20R.

E. GFCI Receptacle: Convenience receptacle with integral ground fault circuit interrupter to meet regulatory requirements.

F. Power receptacles shall be commercial grade as a minimum and shall be sized as specified on the drawings.

2.3 WALL PLATES

A. Manufacturers:
1. Hubbell
2. Pass and Seymour
3. Leviton

B. Decorative Cover Plate: Ivory nylon for all flush mounted switches, receptacles, and other devices specified on the drawings. Receptacles or switches installed on open framed walls shall be installed in 4” boxes with industrial raised face covers.

C. Jumbo Decorative Cover Plate: Ivory nylon plates for all flush mounted switches or devices specified on the drawings.

D. Weatherproof Cover Plate: Gasketed cast metal plate with hinged and gasketed device cover unless a gasketed, in-use type cover is specified on the drawings

PART 3 - EXECUTION

3.1 EXAMINATION

A. Verify outlet boxes are installed at proper height.

B. Verify wall openings are neatly cut and completely covered by wall plates.

C. Verify branch circuit wiring installation is completed, tested, and ready for connection to wiring devices.

3.2 PREPARATION

A. Clean debris from outlet boxes.

3.3 INSTALLATION

A. Install devices plumb and level.

B. Install switches with OFF position down.

C. Install receptacles with grounding pole on bottom.

D. Connect wiring device grounding terminal to branch circuit equipment grounding conductor.

E. Install decorative plates on switch, receptacle, and blank outlets in finished areas.

F. Install raised cover galvanized steel plates on outlet boxes and junction boxes in unfinished areas, above accessible ceilings, and on surface mounted outlets.

3.4 INTERFACE WITH OTHER PRODUCTS

A. Coordinate locations of outlet boxes provided under Section 16130 to obtain mounting heights as specified and as indicated on drawings.

B. Install wall switch 48 inches above finished floor.

C. Install convenience receptacle and voice/data outlets 18 inches above finished floor or as noted on the drawings.

D. Install convenience receptacle and voice/data outlets 6 inches above counters or as noted on the drawings.

E. Install voice/data outlets for wall mounted telephone 48 inches above finished floor or as noted on the drawings.

3.5 FIELD QUALITY CONTROL

A. Inspect each wiring device for defects.

B. Operate each wall switch with circuit energized and verify proper operation.

C. Verify each receptacle device is energized.

D. Test each receptacle device for proper polarity.

E. Test each GFCI receptacle device for proper operation.

3.6 ADJUSTING

A. Adjust devices and wall plates to be flush and level.

3.7 CLEANING

A. Clean exposed surfaces to remove splatters and restore finish.

END OF SECTION

SECTION 16150

WIRING CONNECTIONS

PART 1 - GENERAL

1.1 SUMMARY

A. Section includes electrical connections to equipment.

B. Related Sections:
1. Section 16010 – Basic Electrical Requirements
2. Section 16123 - Building Wire and Cable
3. Section 16130 - Raceway and Boxes

1.2 REFERENCES

A. National Electrical Manufacturers Association:
1. NEMA WD 1 - General Requirements for Wiring Devices
2. NEMA WD 6 - Wiring Devices-Dimensional Requirements

1.3 SUBMITTALS

A. Product Data: Submit wiring device Manufacturer’s catalog information showing dimensions, configurations, and construction.

B. Provide complete Manufacturer's installation instructions.

1.4 COORDINATION

A. Obtain and review shop drawings, product data, Manufacturer’s wiring diagrams, and Manufacturer's instructions for equipment furnished under other sections.

B. Determine connection locations and requirements.

C. Sequence rough-in of electrical connections to coordinate with installation of equipment.

D. Sequence electrical connections to coordinate with start-up of equipment.

PART 2 - PRODUCTS

2.1 CORD AND PLUGS

A. Attachment Plug Construction: Conform to NEMA WD 1.

B. Configuration: NEMA WD 6; match receptacle configuration at outlet furnished for equipment.

C. Cord Construction: Type SO multi conductor flexible cord with identified equipment grounding conductor, suitable for use in damp locations.

D. Size: Suitable for connected load of equipment, length of cord, and rating of branch circuit over current protection.

PART 3 - EXECUTION

3.1 EXAMINATION

A. Verify equipment is ready for electrical connection, for wiring, and to be energized.

3.2 INSTALLATION

A. Make all line voltage electrical connections.

B. Make conduit connections to equipment using flexible metal conduit. Use liquid-tight flexible metal conduit with watertight connectors in damp or wet locations. Flexible conduit length to equipment is limited to 2 feet. Support flexible conduit.

C. Connect heat producing equipment using wire and cable with insulation suitable for temperatures encountered.

D. Install receptacle outlet to accommodate connection with attachment plug.

E. Install cord and cap for field-supplied attachment plug.

F. Install suitable strain-relief clamps and fittings for cord connections at outlet boxes and equipment connection boxes.

G. Install disconnect switches, controllers, control stations, and control devices to complete equipment wiring requirements.

H. Install terminal block jumpers to complete equipment wiring requirements.

I. Install interconnecting conduit and wiring between devices and equipment to complete equipment wiring requirements.

3.3 ADJUSTING

A. Cooperate with utilization equipment Installers and field service personnel during checkout and starting of equipment to allow testing and balancing and other startup operations. Provide personnel to operate electrical system and checkout wiring connection components and configurations

END OF SECTION

SECTION 16210

ELECTRICAL UTILITY SERVICES

PART 1 - GENERAL

1.1 SUMMARY

A. Section includes arrangement with Utility Company for permanent electric service; payment of Utility Company charges for service; service provisions; and utility metering equipment.

1.2 RELATED SECTIONS

A. 16010 – Basic Electrical Requirements

1.3 SYSTEM DESCRIPTION

A. Utility Company: Oncor

B. System Characteristics: 208Y/120 volt, 3 phase, 4 wire, 60 hertz

C. Service Entrance: Underground

1.4 QUALITY ASSURANCE

A. Perform work in accordance with Utility Company written requirements.

B. Maintain one copy of each document on site.

1.5 FIELD MEASUREMENTS

A. Verify field measurements are as indicated on Drawings.

1.6 COORDINATION

A. Contact Utility Company regarding charges related to service installation. Include utility charges in this contract.

PART 2 - PRODUCTS

2.1 TRANSFORMER PAD

A. Furnish in accordance with Utility Company requirements.

2.2 UTILITY METERS

A. Furnished by Utility Company.

2.3 UTILITY METER BASE

A. Provide, mount, and connect in accordance with Utility Company's requirements and the project drawings.

2.4 CURRENT TRANSFORMER ENCLOSURE AND EQUIPMENT

A. Provide, mount, and connect in accordance with Utility Company's requirements and the project drawings.

PART 3 - EXECUTION

3.1 EXAMINATION

A. Verify service equipment is ready to be connected and energized.

END OF SECTION

SECTION 16235

ENGINE GENERATORS

PART 1 - GENERAL

1.1 SUMMARY

A. Section includes engine generator set, exhaust silencer and fittings, transfer switch, fuel fittings, remote control panel, battery, and charger.

B. RELATED SECTIONS
1. 16010 – Basic Electrical Requirements
2. 16060 – Grounding and Bonding
3. 16075 – Electrical Identification

1.2 REFERENCES

A. National Electrical Manufacturers Association:
1. NEMA 250 - Enclosures for Electrical Equipment (1000 Volts Maximum)
2. NEMA AB 1 - Molded Case Circuit Breakers and Molded Case Switches
3. NEMA ICS 10 - Industrial Control and Systems: AC Transfer Switch Equipment
4. NEMA MG 1 - Motors and Generators

B. National Fire Protection Association:
1. NFPA 110 - Standard for Emergency and Standby Power Systems

1.3 SYSTEM DESCRIPTION

A. Description: Engine generator assembly and accessories to provide source of power for application in accordance with NFPA 110.

B. Capacity: 20 kW, 24 kVA at elevation of 3300 feet above sea level, standby rating using specified engine cooling scheme.

1.4 SUBMITTALS

A. Shop Drawings: Indicate electrical characteristics and connection requirements. Include plan and elevation views with overall and interconnection point dimensions, fuel consumption rate curves at various loads, ventilation and combustion air requirements, electrical diagrams including schematic and interconnection diagrams.

B. Product Data: Submit data showing dimensions, weights, ratings, interconnection points, and internal wiring diagrams for engine, generator, control panel, transfer switch, battery, battery rack, battery charger, exhaust silencer, and vibration isolators.

C. Test Reports: Indicate results of performance testing.

D. Manufacturer's Field Reports: Indicate inspections, findings, and recommendations.

1.5 CLOSEOUT SUBMITTALS

A. Operation and Maintenance Data: Submit instructions and service manuals for normal operation, routine maintenance, oil sampling and analysis for engine wear, and emergency maintenance procedures.

1.6 QUALIFICATIONS

A. Manufacturer: Company specializing in manufacturing products specified in this section with minimum three years.

1.7 WARRANTY

A. Furnish parts and labor warranty for 12 months after final acceptance of the system.

1.8 MAINTENANCE MATERIALS

A. Furnish one set of tools required for preventative maintenance of engine generator system. Package tools in adequately sized metal tool box.

B. Furnish two of each fuel, oil and air filter element.

PART 2 - PRODUCTS

2.1 SERVICE CONDITIONS

A. Temperature: 100 degrees F.

B. Altitude: 3,300 feet.

2.2 ENGINE

A. Manufacturers:
1. Generac
2. Cummins
3. Stewart & Stevenson.
4. Onan
5. Approved equal

B. Product Description: Water-cooled in-line or V-type, four-stroke cycle internal combustion engine.

C. Rating: Sufficient to operate under 10 percent overload for one hour in ambient of 100 degrees F at elevation of 3300 feet.

D. Fuel System: No. 2 Fuel Oil (Diesel)

E. Engine speed: 3600 rpm.

F. Safety Devices: Engine shutdown on high water temperature, low oil pressure, over speed, and engine over crank. Limits as selected by Manufacturer.

G. Engine Starting: DC starting system with positive engagement, number and voltage of starter motors in accordance with Manufacturer's instructions. Furnish remote starting control circuit, with MANUAL-OFF-REMOTE selector switch on engine-generator control panel.

H. Engine Jacket Heater: Thermal circulation type water heater with integral thermostatic control, sized to maintain engine jacket water at 90 degrees F, and suitable for operation on 120 volts AC.

I. Radiator: Radiator using glycol coolant, with blower type fan, sized to maintain safe engine temperature in ambient temperature of 110 degrees F. Radiator air flow restriction 0.5 inches of water maximum.

J. Engine Accessories: Fuel filter, lube oil filter, intake air filter, lube oil cooler, fuel transfer pump, fuel priming pump, gear-driven water pump. Furnish water temperature gage and lube oil pressure gage on engine/generator control panel.

K. Mounting: Furnish unit with suitable spring-type vibration isolators and mount on structural steel base.

2.3 GENERATOR

A. Manufacturers:
1. Generac
2. Cummins
3. Stewart & Stevenson
4. Onan
5. Approved equal

B. Product Description: NEMA MG1, three phase, four pole, re-connectable brushless synchronous generator with brushless exciter.

C. Rating 20 kW, 24 kVA, at 0.8 power factor, 208Y/120 volts, 3 phase, 4 wire, 60 Hz.

D. Insulation Class: F.

E. Temperature Rise: 130 degrees C Standby.

F. Enclosure: NEMA MG1, open drip proof.

G. Voltage Regulation: Furnish generator mounted volts per hertz exciter-regulator to match engine and generator characteristics, with voltage regulation plus or minus 1 percent from no load to full load. Furnish manual controls to adjust voltage droop, voltage level (plus or minus 5 percent) and voltage gain.

2.4 GOVERNOR

A. Product Description: Electronic governor to maintain engine speed within 0.5 percent, steady state, and 5 percent, no load to full load, with recovery to steady state within 2 seconds following sudden load changes. Equip governor with means for manual operation and adjustment.

2.5 AUTOMATIC TRANSFER SWITCH

A. Manufacturers:
1. Generac
2. Cummins
3. Stewart & Stevenson
4. Onan
5. Approved equal

B. Product Description: NEMA ICS 10, automatic transfer switch.

C. Configuration: Electrically operated, mechanically held transfer switch.

D. Interrupting Capacity: 100 percent of continuous rating.

E. Withstand Current Rating: 50,000 rms symmetrical amperes, when used with molded case circuit breaker.

F. Control Features and Functions:
1. Indicating Lights: Mount in cover of enclosure to indicate NORMAL SOURCE AVAILABLE, ALTERNATE SOURCE AVAILABLE, switch position.
2. Test Switch: Mount in cover of enclosure to simulate failure of normal source.
3. Return to Normal Switch: Mount in cover of enclosure to initiate manual transfer from alternate source to normal source.
4. Transfer Switch Auxiliary Contacts: 1 normally open; 1 normally closed.
5. Normal Source Monitor: Monitor each line of normal source voltage and frequency; initiate transfer when voltage drops below 85 percent or frequency varies more than 3 percent from rated nominal value.
6. Alternate Source Monitor: Monitor alternate source voltage and frequency; inhibit transfer when voltage is below 85 percent or frequency varies more than 3 percent from rated nominal value.
7. Switched Neutral: Overlapping contacts.

G. Automatic Sequence of Operation:
1. Initiate Time Delay to Start Alternate Source Engine Generator: Upon initiation by normal source monitor.
2. Time Delay To Start Alternate Source Engine Generator: 0 to 30 seconds, adjustable.
3. Initiate Transfer Load to Alternate Source: Upon initiation by normal source monitor and permission by alternate source monitor.
4. Time Delay Before Transfer to Alternate Power Source: 0 to 30 seconds, adjustable.

5. Initiate Retransfer Load to Normal Source: Upon permission by normal source monitor.
6. Time Delay Before Transfer to Normal Power: 0 to 30 seconds, adjustable; bypass time delay in event of alternate source failure.

H. Time Delay Before Engine Shut Down: 0 to 30 minutes, adjustable, of unloaded operation.

I. Engine Exerciser: Start engine every 7 days; run for 30 minutes before shutting down. Bypass exerciser control when normal source fails during exercising period.

J. Enclosure:
1. Enclosure: ICS 10, Type 1
2. Finish: Manufacturer's standard gray enamel

2.6 ACCESSORIES

A. Skid-Mounted Fuel Tank: Double wall, Steel base tank, with fill and vent and low fuel alarm, sized for 48 hours full load operation.

B. Exhaust Silencer: Critical type silencer, with muffler companion flanges and flexible stainless steel exhaust fitting, sized in accordance with engine Manufacturer's instructions.

C. Batteries: Heavy duty, diesel starting type, lead-acid storage batteries, 170 ampere-hours minimum capacity. Match battery voltage to starting system. Furnish cables and clamps.

D. Battery Tray: Treated for electrolyte resistance, constructed to contain spillage.

E. Battery Charger: Current limiting type designed to float at 2.17 volts for each cell and equalize at 2.33 volts for each cell. Furnish overload protection, full wave rectifier, DC voltmeter and ammeter, and 120 volts AC fused input. Furnish wall mounted enclosure to meet NEMA 250, Type 1 requirements.

F. Line Circuit Breaker: NEMA AB 1 molded case circuit breaker on generator output with integral thermal and instantaneous magnetic trip in each pole. Furnish battery voltage operated shunt trip, connected to open circuit breaker on engine failure. Unit mounts in enclosure to meet NEMA 250, Type 1 requirements.

G. Engine-Generator Control Panel: NEMA 250, Type 1 generator-mounted control panel enclosure with engine and generator controls and indicators. Furnish provision for padlock and the following equipment and features:
1. Frequency Meter: 45-65 Hz. range, 3.5 inch dial
2. AC Output Voltmeter: 3.5 inch dial, 2 percent accuracy, with phase selector switch
3. AC Output Ammeter: 3.5 inch dial, 2 percent accuracy, with phase selector switch
4. Output voltage adjustment
5. Push-to-test indicator lamps, one each for low oil pressure, high water temperature, over speed, low fuel level, and over crank

6. Engine start/stop selector switch
7. Engine running time meter
8. Oil pressure gage
9. Water temperature gage
10. Auxiliary Relay: 3PDT, operates when engine runs, with contact terminals pre-wired to terminal strip
11. Additional visual indicators and alarms in accordance with by NFPA 110
12. Remote Alarm Contacts: Factory wire SPDT contacts to terminal strip for remote alarm functions in accordance with NFPA 110

H. Remote Annunciator Panel: Flush mounted panel with brushed stainless steel finish. Furnish audible and visible indicators and alarms in accordance with NFPA 110.

I. Weather-protective Enclosure: Reinforced steel housing allowing access to control panel and service points, with lockable doors and panels. Furnish fixed louvers, fuel tank, battery rack, and silencer.

2.7 SOURCE QUALITY CONTROL

A. Provide shop inspection and testing of completed assembly.

PART 3 - EXECUTION

3.1 INSTALLATION

A. Install engraved plastic nameplates in accordance with Section 16075.

B. Install Generator Set on concrete pad detailed in the plans. Anchor base frame to pad in accordance with Manufacturer’s recommendations.

C. Ground and bond generator and other electrical system components in accordance with Section 16060.

3.2 MANUFACTURER'S FIELD SERVICES

A. Before the work is accepted, an authorized representative of the Manufacturer shall personally inspect the installation and operation of the equipment to determine that it is properly installed and in proper operating order. The qualifications of the representative shall be appropriate to the technical requirements of the installation and shall be submitted to the owner for approval. The decision of the owner concerning the appropriateness of the representative shall be final. Testing and checking shall be accomplished during the course of the work where required by work being concealed, and at the completion of the work otherwise. In addition, the Contractor shall submit to the Design Engineer a signed statement from the representative certifying as follows: “I certify that the materials and/or equipment listed below have been personally inspected by the undersigned authorized Manufacturer’s representative and is properly installed and operating in accordance with the Manufacturer’s recommendations”.

B. Start-up of the equipment shall be performed by the authorized representative of the Manufacturer.

3.3 ADJUSTING

A. Adjust generator output voltage and engine speed to meet specified ratings.

3.4 CLEANING

A. Clean engine and generator surfaces. Replace oil and fuel filters with new.

3.5 DEMONSTRATION AND TRAINING

A. Furnish 8 hours of instruction each for two persons, to be conducted at project site with Manufacturer's representative.

B. Simulate power outage by interrupting normal source, and demonstrate system operates to provide standby power.

END OF SECTION

SECTION 16411

ENCLOSED SWITCHES

PART 1 - GENERAL

1.1 SUMMARY

A. Section includes fusible and non-fusible switches.

B. Related Sections:
1. Section 16010 - Basic Electrical Requirements
2. Section 16060 - Grounding and Bonding
3. Section 16075 - Electrical Identification
4. Section 16491 - Fuses

1.2 REFERENCES

A. National Electrical Manufacturers Association:
1. NEMA FU 1 - Low Voltage Cartridge Fuses
2. NEMA KS 1 - Enclosed and Miscellaneous Distribution Equipment Switches (600 Volts Maximum)

B. International Electrical Testing Association:
1. NETA ATS - Acceptance Testing Specifications for Electrical Power Distribution Equipment and Systems.

1.3 SUBMITTALS

A. Product Data: Submit switch ratings and enclosure dimensions.

1.4 QUALIFICATIONS

A. Manufacturer: Company specializing in manufacturing products specified in this section with minimum three years documented experience.

PART 2 - PRODUCTS

2.1 FUSIBLE SWITCH ASSEMBLIES

A. Manufacturers:
1. GE Electrical
2. Cutler Hammer
3. Square D

B. Product Description: NEMA KS 1, Type HD, horsepower rated enclosed load interrupter knife switch. Handle lockable in OFF position.

C. Fuse clips: Designed to accommodate NEMA FU 1, Class R fuses.

D. Enclosure: NEMA KS 1, to meet conditions. Fabricate enclosure from steel finished with Manufacturer's standard gray enamel.

1. Interior Dry Locations: Type 1
2. Exterior Locations: Type 3R

E. Service Entrance: Switches identified for use as service equipment are to be labeled for this application. Furnish solid neutral assembly and equipment ground bar.

F. Furnish switches with entirely copper current carrying parts.

2.2 NONFUSIBLE SWITCH ASSEMBLIES

A. Manufacturers:
1. GE Electrical
2. Cutler Hammer
3. Square D

B. Product Description: NEMA KS 1, Type HD, horsepower rated enclosed load interrupter knife switch. Handle lockable in OFF position.

C. Enclosure: NEMA KS 1, to meet conditions. Fabricate enclosure from steel finished with Manufacturer's standard gray.
1. Interior Dry Locations: Type 1
2. Exterior Locations: Type 3R

D. Service Entrance: Switches identified for use as service equipment are to be labeled for this application. Furnish solid neutral assembly and equipment ground bar.

E. Furnish switches with entirely copper current carrying parts.

2.3 SWITCH RATINGS

A. Switch Rating: Horsepower rated for AC or DC as indicated on Drawings.

B. Short Circuit Current Rating: UL listed for 200,000 rms symmetrical amperes when used with or protected by Class R.

PART 3 - EXECUTION

3.1 INSTALLATION

A. Install enclosed switches plumb. Provide supports in accordance with Section 16070.

B. Height: 5 feet to operating handle or as noted on the drawings.

C. Install fuses for fusible disconnect switches. Refer to Section 16491 for product requirements.

D. Install engraved plastic nameplates in accordance with Section 16075.

E. Apply adhesive tag on inside door of each fused switch indicating NEMA fuse class and size installed.

END OF SECTION

SECTION 16442

PANELBOARDS

PART 1 - GENERAL

1.1 SUMMARY

A. Section includes distribution and branch circuit panel boards.

B. Related Sections:
1. Section 16060 - Grounding and Bonding
2. Section 16075 - Electrical Identification
3. Section 16491 - Fuses
4. Section 16010 – Basic Electrical Requirements

1.2 REFERENCES

A. National Electrical Manufacturers Association:
1. NEMA AB 1 - Molded Case Circuit Breakers and Molded Case Switches
2. NEMA PB 1 - Panelboards
3. NEMA PB 1.1 - General Instructions for Proper Installation, Operation, and Maintenance of Panelboards Rated 600 Volts or Less

B. National Fire Protection Association:
1. NFPA 70 - National Electrical Code

C. Underwriters Laboratories Inc.:
1. UL 67 - Safety for Panelboards

1.3 SUBMITTALS

A. Shop Drawings: Indicate outline and support point dimensions, voltage, main bus ampacity, integrated short circuit ampere rating, circuit breaker and fusible switch arrangement and sizes.

B. Product Data: Submit catalog data showing specified features of standard products.

1.4 CLOSEOUT SUBMITTALS

A. Project Record Documents: Record actual locations of panelboards and record actual circuiting arrangements.

B. Operation and Maintenance Data: Submit spare parts listing; source and current prices of replacement parts and supplies; and recommended maintenance procedures and intervals.

1.5 QUALIFICATIONS

A. Manufacturer: Company specializing in manufacturing products specified in this section with minimum three years experience.

1.6 MAINTENANCE MATERIALS

A. Furnish two of each panelboard key. Panelboards keyed alike.

PART 2 - PRODUCTS

2.1 DISTRIBUTION PANELBOARDS

A. Manufacturers:
1. Square D
2. Cutler Hammer
3. General Electric
4. Substitutions: Section 01630 - Product Requirements
5. All distribution panel boards shall be supplied from the same Manufacturer

B. Product Description: NEMA PB 1, circuit breaker type panel board.

C. Service Conditions:
1. Temperature: 100 degrees F
2. Altitude: 200 feet above sea level

D. Panelboard Bus: Copper, current carrying components including main feeder connection lugs, ratings as indicated on Drawings. Furnish copper neutral and copper ground bus in each panelboard. Furnish insulated copper ground bus as indicated on Drawings.

E. Minimum integrated short circuit rating: 25,000 amperes rms symmetrical for 208 volt panel boards or as indicated on Drawings.

F. Molded Case Circuit Breakers: NEMA AB 1, bolt-on, circuit breakers with integral thermal and instantaneous magnetic trip in each pole. Furnish circuit breakers UL listed as Type HACR for air conditioning equipment branch circuits.

G. Circuit Breaker Accessories: Trip units and auxiliary switches as indicated on Drawings.

H. Enclosure: NEMA PB 1, Type 1 in interior areas and Type 3R in exterior areas.

I. Cabinet Front: Surface hinged trim with door and flush lock, metal directory frame, finished in Manufacturer's standard gray enamel. Trim shall have a piano hinge on one side with a door that opens with a single latch.

2.2 BRANCH CIRCUIT PANELBOARDS

A. Manufacturers:
1. GE Electrical Model
2. Cutler Hammer
3. Square D
4. Substitutions: Section 01630 - Product Requirements
5. All branch circuit panel boards shall be supplied from the same Manufacturer

B. Product Description: NEMA PB1, circuit breaker type, lighting and appliance branch circuit panelboard.

C. Panelboard Bus: Copper, current carrying components including main feeder connection lugs, ratings as indicated on Drawings. Furnish copper neutral and copper ground bus in each panel board. Furnish insulated copper ground bus as indicated on Drawings.

D. Minimum Integrated Short Circuit Rating: 10,000 amperes rms symmetrical for 240 volt rated panel boards, or as indicated on Drawings.

E. Molded Case Circuit Breakers: NEMA AB 1, bolt-on type thermal magnetic trip circuit breakers, with common trip handle for all poles, listed as Type SWD for lighting circuits, Type HACR for air conditioning equipment circuits. Do not use tandem circuit breakers.

F. Enclosure: NEMA PB 1, Type 1 in interior areas and Type 3R in exterior areas.

G. Cabinet Front: Supply hinged trim with door and flush lock, metal directory frame finished in Manufacturer's standard gray enamel. Trim shall have a piano hinge on one side with a door that opens with a single latch.

PART 3 - EXECUTION

3.1 INSTALLATION

A. Install panel boards in accordance with NEMA PB 1.1.

B. Install panelboards plumb.

C. Install recessed panelboards flush with wall finishes.

D. Height: 6 feet to top of panel board; install panel boards taller than 6 feet with bottom no more than 4 inches above floor.

E. Install filler plates for unused spaces in panelboards.

F. Provide typed circuit directory for each branch circuit panel board. Revise directory to reflect circuiting changes to balance phase loads.

G. Install engraved plastic nameplates in accordance with Section 16075.

H. Install spare conduits out of each recessed panelboard to accessible location above ceiling. Minimum spare conduits: 3 empty 1 inch. Identify each as SPARE.

I. Ground and bond panelboard enclosure according to Section 16060. Connect equipment ground bars of panels in accordance with latest edition of NFPA 70.

J. Perform switch inspections and tests listed in NETA ATS, Section 7.5.

K. Perform controller inspections and tests listed in NETA ATS, Section 7.16.1.

3.2 ADJUSTING

A. Measure steady state load currents at each panelboard feeder; rearrange circuits in panelboard to balance phase loads to within 20 percent of each other. Maintain proper phasing for multi-wire branch circuits.

END OF SECTION

SECTION 16491

FUSES

PART 1 - GENERAL

1.1 SUMMARY: Section includes fuses.

1.2 RELATED SECTIONS

A. 16010 – Basic Electrical Requirements

B. 16411 - Enclosed Switches

1.3 REFERENCES

A. National Electrical Manufacturers Association:
1. NEMA FU 1 - Low Voltage Cartridge Fuses.

1.4 FUSE PERFORMANCE REQUIREMENTS

A. Main Service Switches Larger than 600 amperes: Class L (fast-acting)

B. Main Service Switches: Class RK5, Dual Element, Time Delay

C. Power Load Feeder Switches: RK5, Dual Element, Time Delay

D. Motor Load Feeder Switches: Class RK1, Low Peak, Dual Element, Time Delay

E. Lighting Load Feeder Switches: RK5, Dual Element, Time Delay

F. Other Feeder Switches: RK5, Dual Element, Time Delay

G. General Purpose Branch Circuits: Class RK1, Low Peak, Dual Element, Time Delay

H. Control Circuits: Supply control circuit fuses per equipment Manufacturer’s recommendations.

1.5 SUBMITTALS

A. Product Data: Submit data sheets showing electrical characteristics, including time-current curves.

1.6 CLOSEOUT SUBMITTALS

A. Project Record Documents: Record actual sizes, ratings, and locations of fuses.

1.7 QUALIFICATIONS

A. Manufacturer: Company specializing in manufacturing products specified in this section with minimum three years experience.

1.8 MAINTENANCE MATERIALS

A. Furnish two fuse pullers for each size fuse on the project.

1.9 EXTRA MATERIALS

A. Furnish six spare fuses of each Class, size, and rating installed.

PART 2 - PRODUCTS

2.1 FUSES

A. Manufacturers:
1. Bussman
2. Shawmut
3. Approved equal

B. Dimensions and Performance: NEMA FU 1, Class as specified or as indicated on Drawings.

C. Voltage: Rating suitable for circuit phase-to-phase voltage.

PART 3 - EXECUTION

3.1 INSTALLATION

A. Install fuse with label oriented so Manufacturer, type, and size are easily read.

END OF SECTION

SECTION 16510

INTERIOR LUMINAIRES

PART 1 - GENERAL

1.1 SUMMARY

A. Section includes interior luminaires, lamps, ballasts, and accessories.

B. Related Sections:
1. Section 16530 - Emergency Lighting
2. Section 16010 – Basic Electrical Requirements

1.2 REFERENCES

A. American National Standards Institute:
1. ANSI C82.1 - American National Standard for Lamp Ballast-Line Frequency Fluorescent Lamp Ballast
2. ANSI C82.4 - American National Standard for Ballasts-for High-Intensity-Discharge and Low-Pressure Sodium Lamps (Multiple-Supply Type)

1.3 SUBMITTALS

A. Shop Drawings: Indicate dimensions and components for each luminaire not standard product of Manufacturer.

B. Product Data: Submit dimensions, ratings, and performance data.

1.4 QUALIFICATIONS

A. Manufacturer: Company specializing in manufacturing products specified in this section with minimum three years experience.

1.5 FIELD MEASUREMENTS

A. Verify field measurements prior to fabrication.

PART 2 - PRODUCTS

2.1 INTERIOR LUMINAIRES

A. Product Description: Complete interior luminaire assemblies, with features, options, and accessories as scheduled.

2.2 FLUORESCENT BALLASTS

A. Product Description: Electronic ballast less than 20 percent THD suitable for lamps specified, with voltage to match luminaire voltage.

2.3 HIGH INTENSITY DISCHARGE (HID) BALLASTS

A. Product Description: ANSI C82.4, metal halide lamp ballast, suitable for lamp specified, with voltage to match luminaire voltage.

2.4 FLUORESCENT LAMPS

A. Manufacturers: All linear fluorescent lamps shall be from the same Manufacturer.
   1. General Electric
   2. Philips
   3. Osram/Sylvania
   4. Substitutions: Section 01630 - Product Requirements

2.5 HID LAMPS

A. Manufacturers: All HID lamps shall be from the same Manufacturer.
   1. General Electric
   2. Philips
   3. Osram/Sylvania
   4. Substitutions: Section 01630 - Product Requirements

PART 3 - EXECUTION

3.1 INSTALLATION

A. Install suspended luminaires using pendants supported from swivel hangers. Install pendant length required to suspend luminaire at indicated height.

B. Support luminaires larger than 2 x 4 foot size independent of ceiling framing.

C. Locate recessed ceiling luminaires as indicated on Drawings.

D. Install surface mounted luminaires plumb and adjust to align with building lines and with each other. Secure to prevent movement.

E. Install recessed luminaires to permit removal from below.

F. Install recessed luminaires using accessories and fire-stopping materials to meet regulatory requirements for fire rating.

G. Install clips to secure recessed grid-supported luminaires in place.

H. Install wall-mounted luminaires at height as indicated on Drawings.

I. Install accessories furnished with each luminaire.

J. Connect luminaires to branch circuit outlets provided under Section 16130 using flexible conduit.

K. Make wiring connections to branch circuit using building wire with insulation suitable for temperature conditions within luminaire.

L. Install specified lamps in each luminaire.

M. Ground and bond interior luminaires in accordance with Section 16060.

3.2 FIELD QUALITY CONTROL

A. Operate each luminaire after installation and connection. Inspect for proper connection and operation.

3.3 ADJUSTING

A. Aim and adjust luminaires.

3.4 CLEANING

A. Remove dirt and debris from enclosures.

B. Clean photometric control surfaces as recommended by Manufacturer.

C. Clean finishes and touch up damage.

3.5 SPARE LAMPS

A. Re-lamp all incandescent or filament type luminaries at Substantial Completion.

B. Provide spare lamps as follows:
1. HID Lamps: Four spare lamps of each size and type
2. Linear Fluorescent: Eight spare lamps of each size, type, and color
3. Compact Fluorescent: Four spare lamps of each size, type, and color
4. Incandescent, Quartz, Halogen: Eight spare lamps of each size and type

3.6 SCHEDULES

A. See schedule on drawings.

END OF SECTION

SECTION 16520

EXTERIOR LUMINAIRES

PART 1 - GENERAL

1.1 SUMMARY

A. Section includes exterior luminaires, poles, and accessories.

1.2 RELATED SECTIONS

A. 16010 – Basic Electrical Requirements

1.3 SUBMITTALS

A. Product Data: Submit dimensions, ratings, and performance data.

1.4 QUALIFICATIONS

A. Manufacturer: Company specializing in manufacturing products specified in this section with minimum three years experience.

1.5 COORDINATION

A. Furnish bolt templates and pole mounting accessories to installer of pole foundations.

PART 2 - PRODUCTS

2.1 LUMINAIRES

A. Product Description: Complete exterior luminaire assemblies, with features, options, and accessories as scheduled on the drawings.

2.2 FLUORESCENT BALLASTS

A. Manufacturers:
   1. Magnetek Inc.
   2. Philips Electronic North America
   3. Advanced
   4. Approved equal

B. Product Description: Electronic ballast certified by Certified Ballast Manufacturers, Inc. to comply with ANSI C82.1, suitable for lamps and environmental conditions specified, with voltage to match luminaire voltage.

2.3 HIGH INTENSITY DISCHARGE (HID) BALLASTS

A. Manufacturers:
1. Magnetek Inc.
2. Philips Electronic North America
3. Advanced
4. Approved equal

B. Product Description: ANSI C82.4, metal halide lamp ballast, suitable for lamp and environmental conditions specified, with voltage to match luminaire voltage.

2.4 FLUORESCENT LAMPS

A. Manufacturers:
1. General Electric Co.
2. Philips Electronics
3. Osram/Sylvania
4. Approved equal

2.5 HID LAMPS

A. Manufacturers:
1. General Electric Co.
2. Philips Electronic
3. Osram/Sylvania
4. Approved equal

2.6 METAL POLES

A. Material and Finish: Steel with polyester powder finish as scheduled in fixture schedule on drawings.

B. Section Shape and Dimensions: Tapered round.

C. Height: As scheduled.

D. Accessories:
1. Handhold
2. Anchor bolts

PART 3 - EXECUTION

3.1 EXAMINATION

A. Verify foundations are ready to receive fixtures.

3.2 INSTALLATION

A. Install concrete bases for lighting poles at locations as indicated on Drawings.

B. Install poles plumb. Grout around each base.

C. Install lamps in each luminaire.

D. Bond and ground luminaires, metal accessories and metal poles in accordance with Section 16060. Install supplementary grounding electrode at each pole.

3.3 FIELD QUALITY CONTROL

A. Operate each luminaire after installation and connection. Inspect for improper connections and operation.

3.4 ADJUSTING

A. Aim and adjust luminaires to provide illumination levels and distribution.

3.5 CLEANING

A. Clean photometric control surfaces as recommended by Manufacturer.

B. Clean finishes and touch up damage.

3.6 PROTECTION OF FINISHED WORK

A. Re-lamp luminaires having failed lamps at Substantial Completion.

3.7 SCHEDULES

A. See schedule on drawings.

END OF SECTION

SECTION 16530

EMERGENCY LIGHTING

PART 1 - GENERAL

1.1 SUMMARY

A. Section includes emergency lighting units and lighted exit signs.

1.2 RELATED SECTIONS

A. 16010 – Basic Electrical Requirements

B. 16510 - Interior Luminaires

1.3 REFERENCES

A. National Electrical Manufacturers Association:
   1. NEMA WD 6 - Wiring Devices-Dimensional Requirements.

1.4 SYSTEM DESCRIPTION

A. Emergency lighting to comply with requirements.

1.5 SUBMITTALS

A. Product Data: Submit dimensions, ratings, and performance data.

1.6 QUALIFICATIONS

A. Manufacturer: Company specializing in manufacturing products specified in this section with minimum three years experience.

PART 2 - PRODUCTS

2.1 EMERGENCY LIGHTING UNITS

A. Product Description: Self-contained emergency lighting unit as scheduled on the drawings.

2.2 EXIT SIGNS

A. Product Description: Exit sign fixture as scheduled on the drawings.

2.3 FLUORESCENT LAMP EMERGENCY POWER SUPPLY

A. Product Description: Emergency battery power supply suitable for installation in ballast compartment of fluorescent luminaire.

B. Lamp Ratings: One F32W lamp providing 1100 lumens, minimum.

C. Include TEST switch and AC ON indicator light, installed to be operable and visible from outside of assembled luminaire.

PART 3 - EXECUTION

3.1 INSTALLATION

A. Install suspended exit signs using pendants supported from swivel hangers. Install pendant length required to suspend sign at indicated height.

B. Install surface-mounted emergency lighting units and exit signs plumb and adjust to align with building lines and with each other. Secure to prevent movement.

C. Install wall-mounted emergency lighting units and exit signs at height as indicated on Drawings.

D. Install accessories furnished with each emergency lighting unit and exit sign.

E. Connect emergency lighting units and exit as indicated on Drawings.

F. Make wiring connections to branch circuit using building wire with insulation suitable for temperature conditions within unit.

G. Install specified lamps in each emergency lighting unit and exit sign.

H. Ground and bond emergency lighting units and exit signs in accordance with Section 16060.

3.2 FIELD QUALITY CONTROL

A. Operate each unit after installation and connection. Inspect for proper connection and operation.

3.3 ADJUSTING

A. Aim and adjust lamp fixtures.

B. Position exit sign directional arrows as indicated on Drawings.

3.4 PROTECTION OF FINISHED WORK

A. Re-lamp emergency lighting units and exit signs having failed lamps at Substantial Completion.

END OF SECTION

SECTION 16710

TELECOMMUNICATIONS EQUIPMENT AND CABLING

PART 1 - GENERAL

1.1 SCOPE OF WORK INCLUDES

A. Telecommunications Contractor (hereafter referred to as Contractor) shall, for a fixed fee, procure and install of all required materials to provide complete and functional telecommunications equipment and cabling system as defined in the accompanying project drawings, notes, and specifications. Contractor shall provide a complete, functional system including all necessary components, whether identified in this Section or not.

B. The work performed under this Section shall be of high quality and performed in a professional manner. The Texas Department of Transportation (Owner) reserves the right to reject all or a portion of the work performed, either on technical or aesthetic grounds.

C. Contractor shall, through coordination with the Owner or the Owner's Representative, provide materials and labor to result in an installed and tested, complete and working telecommunication cabling system as depicted within the project drawings/notes, and as described herein.

D. This Section of the Project documentation identifies the components, Manufacturers, and the acceptable installation standards for such components. Component identifications are included within this Section whether they are included in this project or not. Using the project drawings/notes, the Contractor shall determine which components do not need to be included and installed. Before beginning any work on the project, the Contractor shall provide a list of excluded components to the Owner or the Owner's Representative.

E. The Contractor shall initiate contact with and coordinate with the local telephone company to ensure that a standard Regulated Service Entrance or acceptable substitute is available and adequate to support the number of devices called for in the drawings. The Regulated Service Entrance includes the termination, lightning protection, and Telephone Company demarcation equipment and must be installed in compliance with all applicable codes and standards. Contractor shall provide and install punch blocks, back boards, multi-pair distribution cable, Cat-3 or Cat-5 compliant station wiring, ladder rack and/or J-hook assemblies, termination devices, and whatever else is needed to provide voice services at locations as depicted within the project drawings and notes. The drawings and notes depict routing, termination points, and other pertinent information.

F. Contractor shall provide and install device mounting racks, Cat-5 compliant station wiring, ladder rack and/or J-hook assemblies, patch panels, station outlet boxes, termination devices, and whatever else is needed to provide high speed data services at locations as depicted within the project drawings and notes. The drawings and notes depict routing, termination points, and other pertinent information.

G. Horizontal Cat-5 UTP 4-pair blue-jacketed station cable shall be provided and installed as depicted on the drawings (denoted as "data"). Installed data station cables shall be placed within conduit, Cat-5 compliant cable clips, cable raceway, and/or cable ladder rack. Data station cables shall be routed from each outlet as shown on the drawings to the hub room as shown on the drawings. Data station cables shall be homerun from point to point with no splices. Data station cables shall be terminated on EIA/TIA-568-A Cat-5 compliant 8-position/8-conductor (8P8C) modular jacks utilizing T568B wiring pin-outs at the user end, and on EIA/TIA-568-A Cat-5 compliant 8P8C 24-port patch panels utilizing T568B wiring pin-outs within the hub room rack mounted patch panels.

H. Horizontal Cat-3 UTP 4-pair white-jacketed station cable shall be provided and installed as depicted on the drawings (denoted as "voice"). Installed voice station cables shall be placed within conduit, Cat-3/5 compliant cable clips, cable raceway, and/or cable ladder rack. Voice station cables shall be routed from each outlet as shown on the drawings to the punch blocks located within the hub room as shown on the drawings. Voice station cables shall be homerun from point to point with no splices. Each voice station cable shall be terminated on two (2) 6-position/6-conductor (6P6C) modular jacks at each outlet as indicated on the drawing details at the user end, and on 66M150 termination blocks within the hub room.

I. Exact layouts of fixed wall offices, conference rooms, and modular furniture outlet placements shall be as provided by the Owner. In base bid, Contractor shall provide pricing based on the number of new outlets and reinstalled outlets shown on the drawings. Contractor shall provide unit pricing per each type of outlet that may be added by the Owner or the Owner’s Representative at any time prior to completion of Project. Contractor shall provide unit pricing for up to twenty (20) Cat-3 and/or Cat-5 (in any combination) point to point cable runs that may be added by the Owner or the Owner's Representative for miscellaneous use which may include, but is not limited to, elevator telephones, fire alarms, and card entry devices.

J. Except as otherwise shown on the drawings, each fixed wall outlet shall include two (2) 4-pair Cat-5 cables for data applications, terminated on Cat-5 compliant jacks, and one (1) 4-pair Cat-3 cable for voice applications, terminated on two (2) voice grade jacks per the drawing details. Other outlets shall be configured as shown on the drawing details.

K. Voice cable backboards shall be color-coded strictly per this Specification. Horizontal station cable backboards shall be blue; Riser backboards shall be green; Cross-connect backboards shall be white and include wire spool type cable management for cross connect routing as shown on the drawing details. If all of the voice cabling is installed on one backboard, the backboard shall be painted white and the wire spools and punch-down blocks shall be colored coded to identify use.

L. Telecommunications cabling system ground shall be single point, terminating at the Building Electrical Service Entrance Ground per the National Electrical Code. Grounding connectivity shall be in accordance with TIA/EIA TSB 67 and the National Electrical Code. Grounding for all voice riser cables, equipment racks, termination hardware, and related equipment shall be provided and placed by the Contractor.

M. Equipment racks, backboards, termination hardware, cable and wire management hardware, cable labeling, grounding conductors and termination, and all other ancillary equipment required to provide a complete and working telecommunication system shall be provided and installed.

N. Upon completion of installation of conduit, cable, and other components, Contractor shall firestop all penetrations through fire-rated barriers, panels, walls, floors, ceilings, and other partitions. Firestopping used must conform to an approved UL-listed firestopping system, and specific application of system components as set forth in an approved installation diagram. All system components, as well as specific UL-approved installation configuration diagram must be submitted prior to Contractor beginning any installation of cable, conduit, or other material. Any system submitted for installation must meet the codes and standards set forth below as a minimum. Contractor may exceed requirements if, in Contractor's judgment and with the Owner or the Owner's Representative acceptance, superior or more economical designs or materials are available for successful and continuous operation of the equipment as required by this Specification. Installed firestopping must meet requirements of applicable governing regulatory bodies and codes and must pass inspection by local authorities.

O. The entire cabling system shall be machine labeled with all cables numbered and terminated sequentially. The entire cabling system shall be tested and documented as specified herein and warranted to be free from defects in materials and workmanship and capable of transmitting standards based network applications regardless of protocol or network equipment Manufacturer for a period of 10 years. Warranty period commences upon Owner's first use of complete installed system or upon Owner's written acceptance of completed installation, whichever occurs first.

P. Contractor shall prepare and submit record documentation and final As-Built drawings in both hard copy and electronic form as prescribed within the project specifications.

1.2 REFERENCE STANDARDS: The following codes and standards set forth the minimum requirements which may be exceeded by the Contractor if, in the Contractor's judgment and with Owner's acceptance, superior or more economical designs or materials are available for successful and continuous operation of the equipment as required by this Specification:

A. The cable system shall meet the standards set forth in the American National Standards Institute / Electronic Industries Association / Telecommunications Industry Association recommended standards EIA/TIA-568-A, -569, -570, -606, -607, and EIA/TIA-TSB 67, 72.

B. All cables installed under this Specification shall be Underwriters' Laboratories (UL) listed and certified to pass the appropriate UL test for cable designated for installation in plenum and riser spaces per application.

C. The telecommunication cable system shall conform to all local codes and ordinances set forth by local jurisdictions as well as applicable sections of the National Electrical Code, NFPA-70-1996.

D. Firestopping shall be in accordance with ASTM E 814, ASTM E 136, and UL 1479 as well as Section 300-21 of the National Electrical Code.

E. Other applicable standards:
1. ANSI C2-1996 National Electrical Safety Code
2. UL 497 Electrical Grounding and Bonding Equipment
3. FCC Rules and Regulations, Part 68
4. All local codes as adopted by local governmental bodies and the State of Texas
5. Basic, Uniform, and Standard Building Codes (BOCA, ICBO, SSBC)
6. REA Cable Designations - PE Series Specifications
7. NFPA 101 - Life Safety Code

1.3 CONTRACT DRAWINGS AND SPECIFICATIONS

A. The intent of the drawings and specifications is to establish the type of system and functions, but not to set forth each specific item essential to the functioning of the system. The drawings are generally diagrammatic and show approximate location and extent of work. In case of doubt of work intended, it is the responsibility of the Contractor to request instructions from the Owner or the Owner's Representative. The Contractor shall be responsible for installing a complete functioning system.

B. Contractor shall review all drawings and specifications before commencing work. Where discrepancies occur, Contractor shall immediately notify the Owner or the Owner's Representative for clarification.

1.4 SUBMITTALS

A. Prior to ordering any material, provide four (4) copies of complete brochure information on all products for installation on this project. All brochures and specification sheets shall be bound within a three-ring loose leaf binder and organized in the same manner as the Products portion of the Specifications. If more than one product is listed on the same page of the brochure or specification sheet submitted, the intended product or part number shall be clearly indicated or highlighted by the Contractor.

B. Contractor shall submit Proposed Test Procedures and a sample of the printout or test result form, as well as a list of all Test Equipment to be used for cable testing.

C. Contractor shall submit a Proposed Labeling and Cable Identification Scheme describing the outlet labeling, patch panel labeling, fiber patch panel labeling, voice termination labeling, and all cable end labeling procedures and samples.

D. If the Contractor routes telecommunications cables through fire rated walls or other fire rated elements, the Contractor shall submit a Proposed Firestopping System plan and method for approval prior to beginning the firestopping portion of the work.

1.5 RECORD DRAWINGS: Contractor shall maintain one set of drawings on site to continually and accurately record the as-constructed work. The mark-up drawings shall accurately indicate locations of all equipment, pull-boxes, conduits, cable types, cable routing, cable labeling, outlet

locations, and outlet labeling. All record drawings shall be maintained and updated daily and made available for inspection at any time during the course of the work by the Owner or the Owner's Representative. At project completion Contractor shall deliver drawings and documentation of the project, in both hard copy and in AutoCAD V12 or later format, to minimally include:

A. As-built telecommunications floor plans of the facility with entire contracted cable and outlet placement along with the outlet labeling scheme clearly depicted.

B. As-built logical riser diagram describing connectivity and cable sizes for both telecommunications and grounding cabling systems.

C. Cable test results submitted in both hard copy and magnetic format along with viewing software from the tester Manufacturer. Hard copy to be bound within loose-leaf binder neatly organized according to the test type and medium as identified in the Testing portion of this Specification.

PART 2 - PRODUCTS

2.1 GENERAL

A. Materials and equipment provided must be new products of Manufacturers regularly engaged in the production of such products.

B. Products must be UL listed where a UL test procedure is applicable.

C. Substitutions of any equipment from the Approved Manufacturers listing of each product must be approved by the TxDOT Information Systems Division person assigned to this Project. Requests for substitutions must be submitted in writing and state which component is being requested for substitution, and include supporting documentation proving equivalency to all parameters of listed components.

2.2 TELECOMMUNICATIONS CABLES

A. Multi-pair Copper Distribution Cable
   1. Multi-pair Copper Voice Distribution Cable shall be used to provide connectivity between the new network interface device in the telecommunications room of the office building to existing telecommunications backboard in the electric room in the existing shop building. Suitable cable support apparatus shall be provided where a part of cable run is not placed in conduit.
   2. Telephone Distribution Cable, 25 pair, 22 AWG, with PVC jacket for conduit placement.
   3. Cable shall be constructed of 22 AWG solid annealed and individually insulated copper conductors with a PVC outer jacket. The insulated conductors shall be twisted into pairs of varying lengths to minimize crosstalk. The twisted pairs shall be coded using industry standard colors and bound into the drawing specified number of pair groups as per ANSI/ICEA S-80-576.

4. Cable shall be UL listed Type CMG or CM as required per the installation environment for which it is placed and as outlined in the NEC Sections 800-51(a) and (b) respectively.
5. Approved Manufacturers:
   a. Lucent
   b. General Cable
   c. Essex Cable
   d. Approved Equivalent

B. Cat-5 Data Station Cables.
1. Cat-5 rated 4-pair UTP Horizontal/Station cables shall provide connectivity from the data patch panel in the telecommunications room to each fixed wall and workstation outlet location as indicated on the project drawings. Each outlet shall be served with the quantity of Cat-5 cables listed per the outlet legend described in the project drawings.
2. Cables shall be constructed of 24 AWG solid annealed and individually insulated copper conductors. The insulated conductors shall be twisted to form non-shielded pairs using standard telephone industry color codes. The outer cable sheath of all data station cables shall be blue.
3. Cables shall be type CMP rated as outlined in the NEC Sections 800-51(a). For plenum rated cables, the conductor insulation of all pairs shall be FEP or Teflon material.
4. Cables shall meet or exceed the minimum structural and electrical characteristics defined within ANSI/TIA/EIA-568-A for Cat-5 cables and shall be acceptable for IEEE 802.3 applications
5. Approved Manufacturers:
   a. Lucent
   b. Berk-Tek
   c. CommScope
   d. Approved Equivalent

C. Cat-3 Voice Station Cables
1. Cat-3 rated 4-pair UTP Horizontal/Station cables shall provide connectivity from the telecommunications room to each auxiliary wire closet and fixed wall and workstation outlet location as indicated on the project drawings. Each outlet shall be served with the quantity of Cat-3 cables listed per the outlet legend described in the project drawings.
2. Cables shall be constructed of 24 AWG solid annealed and individually insulated copper conductors. The insulated conductors shall be twisted to form non-shielded pairs using standard telephone industry color codes. The outer cable sheath of all voice station cables shall be white.
3. Cables shall be type CMP rated as outlined in the NEC Sections 800-51(a).
4. Cables shall meet or exceed the minimum structural and electrical characteristics defined within ANSI/TIA/EIA-568-A for Cat-3 cables and shall be acceptable for IEEE 802.3 applications.
5. Approved Manufacturers:
   a. Lucent
   b. Berk-Tek
   c. CommScope

d. Approved Equivalent

D. Cross Connect Wire.
1. Contractor shall provide one Reel/Box (1000 ft) of telephone cross-connect wire for installation of cross-connections by the Owner.
2. Wire shall be solid, 24 AWG, two-pair, copper conductors insulated with industry standard color-coded PVC. Provide cross connect wire in reel containing one thousand feet (1000') of wire.
3. Cross Connect Wire shall be of the same Manufacturer as Multi-pair Copper Voice Riser Cable Manufacturer.

E. Grounding Conductor.
1. Bare stranded copper ground conductors shall be provided and installed by the Contractor as shown on the project drawings to provide a grounding system consistent with the 1996 National Electrical Code as well as EIA/TIA 607.
2. Ground conductors shall be minimum 6 AWG between the Building Service Ground point and the hardware components located within the Laboratory hub room.

2.3 TERMINATION EQUIPMENT: Termination equipment shall be provided and installed by the Contractor. Mounting hardware and accessories typically required to provide a complete and working installation shall be provided and installed by the Contractor whether listed herein or not.

A. Cat-5 Patch Panels
1. 19" equipment rack-mounted 24-port modular patch panels shall be provided and installed in the telecommunications room and in any auxiliary wire closets as indicated on the project drawings. Patch panel shall be rated Cat-5 compliant (per ANSI/EIA/TIA-568-A) and shall utilize 8P/8C style non-keyed jacks with T568B pin-out assignments and 110-type termination.
2. Approved Manufacturers:
   a. Panduit
   b. Approved Equivalent

B. Voice Punch Down Termination and Connecting Blocks
1. Type 66M150 termination/wiring blocks for cross connecting between voice station and Riser cables shall be provided and installed in the telecommunications room and any auxiliary wire closets as shown on the project drawings. 66M150 Style blocks shall be wall mountable and manufactured with standoff legs to allow cables to pass behind. All required connecting blocks (4-pair and 5-pair), and labeling strips shall be included.
2. Approved Manufacturers:
   a. Lucent
   b. Siemon
   c. Approved Equivalent

2.4 TELECOMMUNICATIONS WORKSTATION OUTLETS

A. Telecommunications Workstation Outlets shall be provided at the locations shown on the project drawings. Cabling of all telecommunications outlets is the responsibility of the Contractor. Outlets shall be configured, and labeled as depicted in the project drawings. One Manufacturer shall supply all components for all outlet assemblies.

B. Voice/Data outlets will be of modular design. Faceplates and jack inserts shall be color coordinated per Owner's direction. Each outlet shall be configured with modular Cat-5 compliant 8P/8C jacks wired to the T568B pin assignment sequence and/or modular voice grade 6P/6C jacks wired to a "split-pair" USOC pin assignment per the project details.

C. Any unused faceplate ports shall have blank covers installed.

D. Approved Manufacturers:
   1. Panduit
   2. Approved Equivalent

2.5 CABLE SUPPORT HARDWARE AND MOUNTING EQUIPMENT: Miscellaneous Equipment shall be provided and installed by the Contractor as described below and on the drawings. Mounting hardware and accessories typically required to provide a complete and working installation shall be provided and installed by the Contractor whether listed herein or not.

A. Plywood Backboards: Plywood backboards shall be 4' x 8' x ¾" grade CDX plywood mounted with the 8' length placed in the vertical position and securely anchored to wall with fasteners appropriate for the wall construction. Backboards shall be painted white with fire retardant paint as per local code requirements.

B. Termination Backboards: Voice components shall be mounted on Terminal Backboards per the project drawings. Contractor shall utilize Blue (183B1) backboards for station cable termination, Green (183B2) backboards for Riser cable termination, and White (187B1) backboards for all cross connections.

C. Plywood and Termination Backboard Cable Management shall be provided and placed by Contractor on all telecommunications backboards to provide effective routing of all telecommunications cabling. Contractor shall utilize D-rings, Wire Distribution Spools, and Cable Clamps as depicted on the accompanying project drawings.

D. Equipment Rack shall be provided and placed by Contractor as shown on the project drawings. Unit shall be wall mounted and shall be manufactured of aluminum. Nominal equipment rack width shall be 19". Equipment rack shall conform to EIA Standard RS-310-C.
   1. Approved Manufacturers:
      a. Chatsworth Products
      b. Homaco
      c. Harris
      d. Approved Equivalent

E. Equipment Rack Cable Management: Contractor shall provide and install double-sided vertical and horizontal Cable Management sections to effectively organize, strain relieve, and manage the number of data, station, and patch cables as detailed in the project drawings.
   1. Approved Manufacturers:
      a. Chatsworth Products
      b. Homaco
      c. Ortronics
      d. Approved Equivalent

F. Ground Bars, Lugs, and Clamps: Where applicable, ¼" x 12" x 1" copper ground bars shall be installed on the telecommunications Backboard as shown on the drawings. Ground bars shall be mounted utilizing insulated standoffs. Copper grounding conductors shall be placed per the accompanying drawings to effectively bond each ground bar to the Building Electrical Service Entrance Ground. Equipment racks and any other telecommunications equipment requiring grounding shall be bonded to the nearest ground bar using industry standard grounding connectors or lugs as recommended by the respective equipment Manufacturer.
   1. Approved Manufacturers:
      a. Ground Bar - Newton Instruments Fig. 3059
      b. Approved Equivalent

G. Surface Mounted Raceway.
   1. The raceway and all of its fittings and system components shall be nonmetallic, UL-listed with nonflammable self-extinguishing characteristics tested to comparable specifications of UL94V-0.
   2. The raceway shall be a two-piece design with a base and a snap-on cover, or one-piece with a plastic hinged cover section. Total width shall be a minimum of 1.5" by 0.75" deep with an approximate thickness of 0.10". Each channel shall be of sufficient size as to adequately support the number of telecommunications cables required per the outlet configuration(s).
   3. Transition fittings shall consist of tees, elbows, cover clips, end fittings, and drop ceiling connectors. Transition fittings shall be of the same Manufacture as the raceway, shall be placed per Manufacturer's recommendations and installation requirements, and shall be designed for the specific installation application where installed.
   4. Approved Manufacturers:
      a. Wiremold
      b. Panduit
      c. Approved Equivalent

H. J-hook Assemblies: Contractor shall comply with the maximum fill and spacing requirements as specified herein and/or shown on the project drawings/notes. Contractor shall provide and install J-hook assemblies as required to meet spacing and fill requirements.
   1. J-hook horizontal cable supporting hardware shall be UL listed. The J-hook shall provide a broad flat base for proper cable support, thereby reducing stress and bending of cabling.

2. Contractor shall attach appropriate J-hook fasteners for wall, stud, beam, or flange mounting to the supporting structure. Space fasteners to fall a maximum of 5’ apart and no more than 4’ from the final outlet destination turn point as shown on the project drawings.
3. Approved Product:
   a. Caddy CableCat Clips and Caddy supporting hardware
   b. Approved Equivalent

PART 3 - EXECUTION

3.1 INSTALLATION REQUIREMENTS

A. Contractor shall give notice to all entities requiring advance notification and comply with all regulations specified by all governing agencies having jurisdiction over the performance of the work.

B. Contractor shall coordinate with and abide by the construction schedule and sequencing as dictated by the Owner or the Owner’s Representative. Storage and staging areas within the job site shall be as dictated by the Owner or the Owner’s Representative.

C. Contractor shall provide and pay for all permits, labor, materials, equipment, tools, utilities, and services necessary for the proper execution and completion of the Telecommunications Cabling System.

D. Contractor shall maintain during construction and submit accurate record construction drawings as described in Section 1.5 Record Drawings within two (2) workdays after completion of construction.

3.2 INSTALLATION METHODS

A. Contractor shall provide and install telecommunications cabling system as detailed by the project drawings, notes, details, specifications, and addenda if so issued. Where specific equipment and cable layouts are provided, it is the Contractors responsibility to install as specified or to provide complete information justifying alternatives prior to beginning work on affected portions of the project.

B. The following prescribes methods, which shall define a minimum level of quality to be maintained throughout the project. By prior written agreement with the Owner, the Contractor may exceed this level of quality; however, the project schedule, budget, and function of the delivered system must be maintained while doing so.
   1. Use the maximum possible bending radius on all cables during installation. A radius of curvature greater than the minimum bending radius of the cable per the Manufacturer's specifications shall be maintained at all times.
   2. Where placed within conduit, all cables shall be continuously lubricated during the pulling-in process. The maximum pulling tensions specified by the cable Manufacturers shall not be exceeded. Monitor cable-pulling tension with a mechanical tension-meter.

3. Contractor shall use tools and equipment specifically designed for each installation task. The Contractor shall utilize installation practices, which ensure the highest quality installation. Contractor shall perform all cutting, splicing, pulling and termination of cables using equipment specifically designed for that purpose.
4. Contractor shall install tie wraps using a tension-controlling cutting device. Tension shall not exceed that which is specified by the Manufacturer of the cable as being deleterious to the specified performance of the cable. Tie wraps and other securing hardware shall be rated as required for the installation environment.
5. Contractor shall fill conduit with cables with the following guidelines:
    a. Where conduits are stacked, the cabling system Contractor shall fill the bottom raceway to its maximum fill ratio first and then move to the next raceway above it and so on.
    b. Where multiple conduits are being used, the Contractor shall fill one conduit to its maximum fill ratio before going on to the next conduit. The cabling system Contractor shall leave as many spare conduits available as possible and under no circumstance shall the Contractor leave less than one spare conduit available.
    c. The maximum fill ratio for all conduits shall be 40%.
    d. The Contractor shall not exceed the maximum fill ratio, per the NEC, for any reason.
    e. All spare conduits shall have two (2) pull strings installed and left for future pulling in of cable. The pull strings shall be clearly labeled on each end as "Pulling Line Number 1 and Pulling Line Number 2," and each end shall be clearly labeled to indicate the location of its corresponding opposite end.
6. Contractor shall support cables running overhead that are not installed in raceway or conduit by approved load dispersing “J” hook assemblies, spaced a maximum of 5 feet from each other.
7. Install raceways or conduit system completely before pulling-in cables. Clean interior of each run of conduit before pulling-in cable.
8. Penetrations through walls and floors shall maintain fire resistance rating, per NEC 300-21.
9. Install connectors in conformance with Manufacturer recommended stripping and crimping procedures. Use special tools designed for this purpose.
10. Termination onto patch panels and punch-down onto termination blocks of all station cables shall be in consecutive, as-built, numerical sequence from top to bottom and left to right without skipping any ports or positions. Where applicable, floor number will comprise the high order number of the sequence.
11. Cat-5 installation shall conform strictly to EIA/TIA-568-A and TSB-40B to insure a quality system that meets the transmission rate criteria.
12. Labeling of all telecommunications components shall be as described within the accompanying project drawings and Section 3.4 “Labeling Methods” of this Specification Document. Labeling shall be mechanically produced not handwritten.

3.3 FIRESTOPPING

A. For the purposes of this section the following definitions shall apply:

1. Firestop System means a specific construction consisting of any device intended to close off an opening or penetration during a fire and/or materials that fill an opening in a wall or floor assembly where penetration is by cables, cable trays, conduits, ducts, pipes and any poke through termination device, such as electrical outlet boxes along with their means of support through the wall or the floor opening. (Ref: ASTM E-814)
2. Listed System Design means an informational listing by an Accredited Testing Agency developed from Firestop Systems Reports depicting the correct use and installation of firestop materials. These published listings contain drawings depicting geometry, minimum/maximum dimensions for all the individual components tested including penetration item type and size, annular space, insulating materials used, substrate types and thickness, sealant types and thickness, etc.
3. Fire Resistance Rating means the time in hours or fraction thereof that a material or assembly of materials will withstand the passage of flame and the transmission of heat when exposed to fire under specified conditions of test and performance criteria, or as determined by extension of interpretation derived therefrom as prescribed in the National Building Code.
4. Service Penetration means any hole or void created in the faces or edges of Fire Separations or Firewalls for Mechanical and Electrical through penetrations or poke through termination devices and/or other building services.
5. Firestop Material means any material used individually or as a component to create an ASTM E-814 Firestop System.

B. Work Included in Firestopping.

1. Work of this section comprises firestop materials and listed systems designs intended to act as firestop systems and smoke seals at openings around penetrations, at unpenetrated openings, at projecting or recessed items, and at openings and joints within and around fire separations and firewalls.
2. All plans involving the installation of the various firestopping systems must be submitted to and approved by the Owner or the Owner’s Representative prior to beginning the firestop systems portion of the work.
3. Cable shall at no point pass through an unsealed penetration through a fire-rated barrier.
4. Contractor shall provide seals approved by the UL in all fire rated separations and firewalls to form tight barriers to retard the passage of flame and smoke.
5. The installed seals shall provide and maintain the fire resistance rating of the adjacent floor, wall or other fire separation assembly to the requirements of ASTM E-814 and acceptable to authorities having jurisdiction and the Engineer.
6. Provide the work using competent Installers, experienced in the application of the materials and systems being used, approved and trained by the material or system Manufacturer.
7. Firestop systems shall conform to the (F) and (T) ratings of ASTM E-814 and other local requirements of authorities having jurisdiction.

3.4 LABELING METHODS

A. General: Labeling shall be machine produced or typewritten, self laminating, indelible, and shall be permanently affixed to patch panel ports, termination blocks, and outlet locations, as well as all station and data riser cable ends. Handwritten labels will not be accepted. Contractor shall confirm final, as-built numbers with the Owner or the Owner's Representative prior to labeling. Proposed labeling scheme shall at a minimum meet the following criteria.

B. Labeling of all components within the hub rooms shall be in sequential order.

C. Outlet labels shall provide reference to the final, as-built outlet location and station position. Contractor shall clean outlet faceplates of all dirt and dust prior to applying labels. Provide “Voice” and “Data” descriptors or icons on the proper jacks.

D. Station Cable Labeling: Each station cable label shall possess characters describing the serving patch panel and port position, or serving termination block and position, and the destination room number and station identifier.

E. Voice Distribution Cable Labeling: Each voice distribution cable shall possess characters describing both the serving termination block and position, and destination termination block, and position.

F. Patch Panel Labeling: Each station patch panel port label shall possess characters describing the final, as built room number within which the outlet is located as well as the specific station identifier. Patch panels shall be numbered consecutively from top patch panel in rack to bottom patch panel in rack.

G. Termination Block Labeling: Each station termination block label shall possess characters describing the final, as built, room number within which the outlet is located as well as the specific station identifier. The positions shall be labeled in consecutive sequence from as-built, final room and station order.

PART 4 - TESTING AND QUALITY ASSURANCE

4.1 GENERAL

A. Contractor shall have installed similar systems in at least ten (10) other projects within the last five (5) years. Contractor shall submit evidence of compliance with this requirement prior to beginning work on the project.

4.2 TESTING

A. Individual Installers of cabling, components, and devices shall be certified through the Panduit Installer Certification Program. Contractor shall submit evidence of compliance with this requirement prior to any individual beginning work on the project.
   1. The Contractor shall separately test and document the cables and terminations throughout the entire cabling system. The Contractor shall ensure that the

installed cable and equipment is without flaw and that no damaged cable or equipment has been included in the installation. The Owner's Representatives shall be allowed to observe the testing of the installed cabling and terminations at any time during the testing process.

2. Acceptance of the installed Telecommunications Cabling System shall be based on the quality of Contractor performance by analysis/inspection of the testing program documentation and the conformance of the system operation with the criteria described herein. Contractor shall make available all drawings and documentation prior to acceptance testing.
3. Contractor shall provide all necessary testing equipment for performing the required acceptance test. Contractor shall verify the authenticity and display appropriate calibration data to include the expiration date of the correct calibration.
4. Contractor shall perform inspection of all products before installation and shall perform other inspections as necessary to assure that quality of performance conforms to specified requirements. Contractor shall perform timely quality assurance inspections throughout the duration of the project, including a pre-installation inspection and a final inspection. The pre-installation inspection shall be performed jointly by the Contractor and the Owner or the Owner's Representative a minimum of five (5) work days prior to beginning any work. The pre-installation inspection will, at a minimum, verify the conformance of all equipment to the requirements set forth by the drawings and Specifications and industry standards, site readiness, availability of Bill of Materials (BOM), and adequacy of equipment furnished by the Contractor.
5. The Contractor shall perform in-progress inspections regularly to verify conformance of the installation methods to the Scope of Work (SOW) and industry standards. The Contractor shall prepare an inspection checklist to facilitate an orderly inspection process and to insure that all installed components of the cabling infrastructure are examined before, during and after installation. Contractor shall provide one copy of each completed inspection checklist within one (1) workday after each inspection. Inspections during installation as well as a final inspection encompassing the entire installed system shall be performed prior to system acceptance by the Owner or the Owner's Representative.
6. The Contractor shall correct, in a timely manner, any installation deficiencies or unacceptable equipment, based on a Contractor, the Owner or the Owner's Representative quality assurance (QA) inspection. Contractor shall then perform re-certification of any affected portion of the installation. All quality assurance inspections are subject to verification by the Owner or the Owner's Representative.
7. The Contractor shall perform inspection of the project as a whole, assuring himself that the work on the project is ready for final acceptance, before calling upon the Owner or the Owner's Representative to make a final inspection. Evidence during acceptance testing that such overall inspection has not been performed shall be grounds for rejection of installation and rescheduling of testing.
8. Testing of all installed telecommunications cabling systems shall be performed by the Contractor. Interim testing of the cabling systems during and after installation is encouraged to ensure that the following testing and acceptance criteria are met.

4.3 UTP COPPER CABLE SYSTEMS

A. All twisted pair cable shall be tested for continuity, crosses or grounds, and to ensure that pin-outs are in accordance with the drawings and these Specifications. Test results shall document each installed cable pair for pass/fail, problems encountered in the case of a failure, and the procedure required to result in a cleared pair. The results of the testing shall be furnished in printed format. All test documents shall be dated and signed by the personnel performing the testing. Hand-written test results are not acceptable.

B. Contractor shall perform final testing on the entire UTP voice copper cable system to demonstrate the acceptability of the project as installed. As a minimum, the Contractor shall perform and furnish documentation of the following tests:
1. Continuity
2. Shorts/Crosses
3. Grounds
4. Opens
5. Reversed Pairs
6. Split Pairs
7. NEXT Performance
8. Length
9. Attenuation Performance

C. Cat-5 End to End Link Performance shall be in accordance with the specification set forth in ANSI/TIA/EIA-568-A as well as meeting the documents' requirements for:
1. Cabling length and topology
2. Component, performance and reliability
3. Installation practices

D. All Cat-5 wiring shall be tested to indicate a minimum of 100 Mbps transmission capability. Test results shall document each installed cable pair for measured attenuation and Near End Cross Talk (NEXT), problems encountered in the case of a value being unacceptable, and the procedure required to result in a compliant link. Cat-5 testing shall use an approved Cat-5 testing device for validation of performance. Each cable pair tested shall meet the following link performance requirements from the Hub Room termination to the outlet port as set forth in the ANSI/TIA/EIA-568B:

CATEGORY FIVE END TO END LINK PERFORMANCE		
Frequency (MHz)	Maximum Attenuation (dB)	Maximum NEXT (dB)
1	2.2	-54.5
4	4.7	-59.5
10	7.0	-44
16	8.76	-40.5
20	10.0	-38.5
100	23.5	-27

4.4 TESTING DELIVERABLES

A. Within ten (10) days of completion of testing all cabling systems, Contractor shall submit two (2) copies of the fiber, general copper, and Cat-5 test results as described in the Testing portion of the Specifications in both hard copy and electronic format. The hard copies shall be submitted in an orderly and typewritten format, bound, and separated by test type using dividers.

4.5 WARRANTY

A. In addition to guarantee of equipment by Manufacturer(s), the Contractor shall also guarantee equipment. Such guarantee shall include tests, adjustments and/or replacements of defective equipment, materials, and workmanship for a period of ten (10) years from the date of acceptance of the project as complete by the Owner or the Owner's Representative.

END OF SECTION

SECTION 16722

GAS MONITORING SYSTEM

PART 1 - GENERAL

1.1 GENERAL OPERATION

A. The Gas Monitoring System (GMS) shall operate as stand alone system(s). The monitors shall be engineered to continuously monitor for the presence of propane gas. When gas concentration surpasses the preset limit in any sensor module in a zone, audible alarm indication and relays shall be activated for that particular zone. Sensor reaction shall be instantaneous; however alarms shall be capable of being delayed dependent on user preference, and dedicated flashing warning lights for visual indication and low mounted side wall exhaust fans for propane gas evacuation shall be immediately activated.

B. The preset limit for activation shall be 20% LEL (lower explosive limit) for propane gas.

1.2 SCOPE: Install the following in accordance with the engineering drawings:

A. Gas detection monitor panels (with built-in audible alarm), sensors, flashing warning lights and dedicated exhaust fans.

B. All associated electrical equipment and materials – conduit, wiring, switches, relays, etc.

1.3 RELATED SECTIONS

A. Section 16123 – Building Wire and Cable

B. Section 16130 – Raceways and Boxes

C. Section 16010 – Basic Electrical Requirements

1.4 REFERENCES

A. NFPA 70 – National Electrical Code

B. NFPA 58 – Liquefied Petroleum Gas Code

C. NFPA 72 – National Fire Alarm Code

1.5 SUBMITTALS

A. Product Data: Provide Manufacturers data on all equipment and components described herein.

B. Submittal shall include Manufacturer's Installation Instructions and complete system wiring and central control station schematics.

1.6 OPERATION AND MAINTENANCE DATA

A. Calibrate monitoring system per Manufacturer's recommendations.
   1. The Manufacturer's authorized technical representative shall be present during all tests and inspections. The Manufacturer's authorized representative shall provide supervision of final connections to the system panel, perform a complete functional test of the system and submit a written report to the contractor attesting to the proper operation of the completed system. This report shall be a part of the final documents submitted to the owner.

B. The Manufacturer's authorized representative shall perform an eight (8) hour training session where the representative shall instruct and train a minimum of six (6) TxDOT personnel and, if applicable, local Fire Department personnel in the operation of the system. At the training session, the Manufacturer's authorized representative shall provide a complete written operating and maintenance manual that clearly describes the system, its operation, and any maintenance requirements. It shall also have a clearly understandable maintenance schedule and a complete parts list for all components of the system(s).

1.7 DELIVERY, STORAGE, AND HANDLING

A. Deliver, store, protect and handle products to site under provisions of the Uniform General Conditions and Special Conditions.

1.8 EXTRA MATERIALS

A. Monitoring system Calibration Kit.

B. Furnish under provisions of the Uniform General Conditions and Special Conditions.

PART 2 - PRODUCTS

2.1 MANUFACTURERS

A. Gas Monitoring Equipment:
   1. Armstrong Monitoring Corporation
   2. BW Technologies
   3. Enmet Corporation
   4. Thermo Gas Tech
   5. Rel-Tek Corporation
   6. Approved equal

2.2 GAS MONITORING SYSTEM

A. Monitoring Panel:
   1. Shall be enclosed in a NEMA 12 cabinet.
   2. Dual DPDT 10 ampere relays for alarm actuation and control of ventilation equipment and/or auxiliary alarms.

3. LED's indicating power on, low and high alarms, fail, plus a user selectable audible indicator capable of being silenced for high alarm.
4. Test sequence activated by single push button.
5. Alarms shall be equipped with user selectable time delays whereby, when chosen, low and high alarm conditions must prevail for five and ten minutes respectively before activation occurs.
6. Alarms shall be equipped with dead bands which require gas levels to decline slightly below the original trip point before alarms will automatically reset.

B. Sensors:
1. Multi-drop propane gas sensor compatible with Monitor Panel.

C. Strobe (Warning) Light:
1. 120 VAC amber strobe light. See drawing schedule.

D. Alarm annunciator:
1. Annunciators in office areas shall be red in color, shall be clearly audible, well above a normal sound level, and shall be of such a size that it is inobtrusive in the environment.
2. Annunciators in exterior areas shall be red in color, and shall be clearly audible across the compound, well above a normal sound level.

PART 3 - EXECUTION

3.1 INSTALLATION

A. GMS shall be installed in accordance with Manufacturer's instructions, NFPA 58, local codes, the National Electric Code (NEC) and the engineering Drawing. See Drawing for locations.

B. Monitor – Bottom of monitor panel shall be mounted on wall 48" above floor.

C. Sensors – Shall be mounted on wall 18" above floor. All wiring shall be run in conduit with no exposed wiring.

D. Strobe Warning Light – Shall be mounted on wall 10 feet above floor. All wiring shall be run in conduit with no exposed wiring.

E. Alarm Annunciators – Shall be mounted on wall 10 feet above floor (or just below ceiling in office areas). All wiring shall be run in conduit with no exposed wiring.

F. Side wall exhaust fans shall be wired into the GMS and set to activate set upon detection of LP gas. See drawings for fan locations.

END OF SECTION

ATTACHMENT G
ITEM 506 Temporary Erosion Control

TEMPORARY EROSION, SEDIMENTATION AND ENVIRONMENTAL CONTROLS ITEM 506 (2004 Specifications)

506.1. Description. Install, maintain, and remove erosion, sedimentation, and environmental control devices. Remove accumulated sediment and debris.

506.2. Materials.

A. Rock Filter Dams.

1. **Aggregate.** Furnish aggregate with hardness, durability, cleanliness, and resistance to crumbling, flaking, and eroding acceptable to the Engineer. Provide the following:
   • **Types 1, 2, and 4 Rock Filter Dams.** Use 3 to 6 in. aggregate.
   • **Type 3 Rock Filter Dams.** Use 4 to 8 in. aggregate.
2. **Wire.** Provide minimum 20 gauge galvanized wire for the steel wire mesh and tie wires for Types 2 and 3 rock filter dams. Type 4 dams require:
   • a double-twisted, hexagonal weave with a nominal mesh opening of 2-1/2 in. x 3-1/4 in.;
   • minimum 0.0866 in. steel wire for netting;
   • minimum 0.1063 in. steel wire for selvages and corners; and minimum 0.0866 in. for binding or tie wire.
3. **Sandbag Material.** Furnish sandbags meeting Section 506.2.I, “Sandbags,” except that any gradation of aggregate may be used to fill the sandbags.

B. Temporary Pipe Slope Drains. Provide corrugated metal pipe, polyvinyl chloride (PVC) pipe, flexible tubing, watertight connection bands, grommet materials, prefabricated fittings, and flared entrance sections that conform to the plans. Recycled and other materials meeting these requirements are allowed if approved.

Furnish concrete in accordance with Item 432, “Riprap.”

C. Baled Hay. Provide hay bales weighing at least 50 lb., composed entirely of vegetable matter, measuring 30 in. or longer, and bound with wire, nylon, or polypropylene string.

D. Temporary Paved Flumes. Furnish asphalt concrete, hydraulic cement concrete, or other comparable non-erodible material that conforms to the plans. Provide rock or rubble with a minimum diameter of 6 in. and a maximum volume of 1/2 cu. ft. for the construction of energy dissipaters.

E. Construction Exits. Provide materials that meet the details shown on the plans and this Section.

1. **Rock Construction Exit.** Provide crushed aggregate for long and short-term construction exits. Furnish aggregates that are clean, hard, durable, and free from adherent coatings such as salt, alkali, dirt, clay, loam, shale, soft, or flaky materials and organic and injurious matter. Use 4- to 8-in. aggregate for Type 1 and 2- to 4-in. aggregate for Type 3.
2. **Timber Construction Exit.** Furnish No. 2 quality or better railroad ties and timbers for long-term construction exits, free of large and loose knots and treated to control rot. Fasten timbers with nuts and bolts or lag bolts, of at least 1/2 in. diameter, unless otherwise shown on the plans or allowed. For short-term exits, provide plywood or pressed wafer board at least 1/2 in. thick.
3. **Foundation Course.** Provide a foundation course consisting of flexible base, bituminous concrete, hydraulic cement concrete, or other materials as shown on the plans or directed.

F. Embankment for Erosion Control. Provide rock, loam, clay, topsoil, or other earth materials that will form a stable embankment to meet the intended use.

G. Pipe. Provide pipe outlet material in accordance with Item 556, "Pipe Underdrains," and details shown on the plans.

H. Construction Perimeter Fence.

1. **Posts.** Provide essentially straight wood or steel posts that are at least 60 in. long. Furnish soft wood posts with a minimum diameter of 3 in. or use 2 x 4 boards. Furnish hardwood posts with a minimum cross-section of 1-1/2 x 1-1/5 in. Furnish T- or L-shaped steel posts with a minimum weight of 1.3 lb. per foot.
2. **Fence.** Provide orange construction fencing as approved by the Engineer.
3. **Fence Wire.** Provide 12-1/2 gauge or larger galvanized smooth or twisted wire. Provide16 gauge or larger tie wire.
4. **Flagging.** Provide brightly-colored flagging that is fade-resistant and at least 3/4 in. wide to provide maximum visibility both day and night.
5. **Staples.** Provide staples with a crown at least 1/2 in. wide and legs at least 1/2 in. long.
6. **Used Materials.** Previously used materials meeting the applicable requirements may be used if accepted by the Engineer.

I. Sandbags. Provide sandbag material of polypropylene, polyethylene, or polyamide woven fabric with a minimum unit weight of 4 oz. per square yard, a Mullen burst-strength exceeding 300 psi, and an ultraviolet stability exceeding 70%.

Use natural coarse sand or manufactured sand meeting the gradation given in Table 1 to fill sandbags. Filled sandbags must be 24 to 30 in. long, 16 to 18 in. wide, and 6 to 8 in. thick.

Table 1
Sand Gradation

Sieve #	Maximum Retained (% by Weight)
4	3%
100	80%
100	95%

J. Temporary Sediment Control Fence. Provide a net-reinforced fence using woven geo-textile fabric. Logos visible to the traveling public will not be allowed.

1. **Fabric.** Provide fabric materials in accordance with DMS-6230, "Temporary Sediment Control Fence Fabric."

2. **Posts.** Provide essentially straight wood or steel posts with a minimum length of 48 in., unless otherwise shown on the plans. Soft wood posts must be at least 3 in. in diameter or nominal 2 x 4 in. Hardwood posts must have a minimum cross-section of 1-1/2 x 1-1/2 in. T- or L-shaped steel posts must have a minimum weight of 1.3 lb. per foot.
3. **Net Reinforcement.** Provide net reinforcement of at least 12-1/2 gauge galvanized welded wire mesh, with a maximum opening size of 2 x 4 in., at least 24 in. wide, unless otherwise shown on the plans.

4. **Staples.** Provide staples with a crown at least 3/4 in. wide and legs 1/2 in. long.

5. **Used Materials.** Use recycled material meeting the applicable requirements if accepted by the Engineer.

506.3. Equipment. Provide a backhoe, front end loader, blade, scraper, bulldozer, or other equipment as required when "Earthwork for Erosion Control" is specified on the plans as a bid item.

506.4. Construction.

A. Contractor Responsibilities. Implement the Department's Storm Water Pollution Prevention Plan (SWP3) for the project site in accordance with the specific or general storm water permit requirements. Develop and implement an SWP3 for project-specific material supply plants within and outside of the Department's right of way in accordance with the specific or general storm water permit requirements. Prevent water pollution from storm water associated with construction activity from entering any surface water or private property on or adjacent to the project site.

B. General.

1. **Phasing.** Implement control measures in the area to be disturbed before beginning construction, or as directed. Limit the disturbance to the area shown on the plans or as directed. If, in the opinion of the Engineer, the Contractor cannot control soil erosion and sedimentation resulting from construction operations, the Engineer will limit the disturbed area to that which the Contractor is able to control. Minimize disturbance to vegetation.

2. **Maintenance.** Immediately correct ineffective control measures. Implement additional controls as directed. Remove excavated material within the time requirements specified in the applicable storm water permit.

3. **Stabilization.** Stabilize disturbed areas where construction activities will be temporarily stopped in accordance with the applicable storm water permit. Establish a uniform vegetative cover. The project will not be accepted until a 70% density of existing adjacent undisturbed areas is obtained, unless otherwise shown on the plans. When shown on the plans, the Engineer may accept the project when adequate controls are in place that will control erosion, sedimentation, and water pollution until sufficient vegetative cover can be established.

4. **Finished Work.** Upon acceptance of vegetative cover, remove and dispose of all temporary control measures, temporary embankments, bridges, matting, falsework, piling, debris, or other obstructions placed during construction that are not a part of the finished work, or as directed.

5. **Restricted Activities.** Do not locate disposal areas, stockpiles, or haul roads in any wetland, water body, or streambed.

Do not install temporary construction crossings in or across any water body without the prior approval of the appropriate resource agency and the Engineer. Restrict construction operations in any water body to the necessary areas as shown on the plans or applicable permit, or as directed. Use temporary bridges, timber mats, or other structurally sound and non-eroding material for stream crossings.

Provide protected storage area for paints, chemicals, solvents, and fertilizers at an approved location. Keep paints, chemicals, solvents, and fertilizers off bare ground and provide shelter for stored chemicals.

C. Installation, Maintenance, and Removal Work. Perform work in accordance with the specific or general storm water permit. Install and maintain the integrity of temporary erosion and sedimentation control devices to accumulate silt and debris until earthwork construction and permanent erosion control features are in place or the disturbed area has been adequately stabilized as determined by the Engineer. If a device ceases to function as intended, repair or replace the device or portions thereof as necessary. Remove sediment, debris, and litter. When approved, sediments may be disposed of within embankments,

or in the right of way in areas where the material will not contribute to further siltation. Dispose of removed material in accordance with federal, state, and local regulations.

Remove devices upon approval or when directed. Upon removal, finish-grade and dress the area.
Stabilize disturbed areas in accordance with the permit, and as shown on the plans or directed. The Contractor retains ownership of stockpiled material and must remove it from the project when new installations or replacements are no longer required.

1. **Rock Filter Dams for Erosion Control.** Remove trees, brush, stumps, and other objectionable material that may interfere with the construction of rock filter dams. Place sandbags as a foundation when required or at the Contractor's option. For Types 1, 2, 3, and 5, place the aggregate to the lines, height, and slopes specified, without undue voids. For Types 2 and 3, place the aggregate on the mesh and then fold the mesh at the upstream side over the aggregate and secure it to itself on the downstream side with wire ties, or hog rings, or as directed. Place rock filter dams perpendicular to the flow of the stream or channel unless otherwise directed. Construct filter dams according to the following criteria, unless otherwise shown on the plans:
   a. **Type 1 (Non-reinforced).**
      (1) Height. At least 18 in. measured vertically from existing ground to top of filter dam.
      (2) Top Width. At least 2 ft.
      (3) Slopes. At most 2:1.
   b. **Type 2 (Reinforced).**
      (1) Height. At least 18 in. measured vertically from existing ground to top of filter dam.
      (2) Top Width. At least 2 ft.
      (3) Slopes. At most 2:1.
   c. **Type 3 (Reinforced).**
      (1) Height. At least 36 in. measured vertically from existing ground to top of filter dam.
      (2) Top Width. At least 2 ft.
      (3) Slopes. At most 2:1.
   d. **Type 4 (Sack Gabions).** Unfold sack gabions and smooth out kinks and bends. For vertical filling, connect the sides by lacing in a single loop–double loop pattern on 4- to 5-in. spacing. At one end, pull the end lacing rod until tight, wrap around the end, and twist 4 times. At the filling end, fill with stone, pull the rod tight, cut the wire with approximately 6 in. remaining, and twist wires 4 times. For horizontal filling, place sack flat in a filling trough, fill with stone, and connect sides and secure ends as described above. Lift and place without damaging the gabion. Shape sack gabions to existing contours.
   e. **Type 5.** Provide rock filter dams as shown on the plans.

2. **Temporary Pipe Slope Drains.** Install pipe with a slope as shown on the plans or as directed. Construct embankment for the drainage system in 8-in. lifts to the required elevations. Hand-tamp the soil around and under the entrance section to the top of the embankment as shown on the plans or as directed. Form the top of the embank kment or earth dike over the pipe slope drain at least 1 ft. higher than the top of the inlet pipe at all points. Secure the pipe with hold-downs or hold-down grommets spaced a maximum of 10 ft. on center. Construct the energy dissipators or sediment traps as shown on the plans or as directed. Construct the sediment trap using concrete or rubble riprap in accordance with Item 432, "Riprap," when designated on the plans.

3. **Baled Hay for Erosion and Sedimentation Control.** Install hay bales at locations shown on the plans by embedding in the soil at least 4 in. and, where possible, approximately 1/2 the height of the bale, or as directed. Fill gaps between bales with hay.

4. **Temporary Paved Flumes.** Construct paved flumes as shown on the plans or as directed. Provide excavation and embankment (including compaction of the subgrade) of material to the dimensions shown on the plans, unless otherwise indicated. Install a rock or rubble riprap energy dissipater, constructed from the materials specified above to a minimum depth of 9 in. at the flume outlet to the limits shown on the plans or as directed.

5. **Construction Exits.** When tracking conditions exist, prevent traffic from crossing or exiting the construction site or moving directly onto a public roadway, alley, sidewalk, parking area, or other right of way areas other than at the location of construction exits. Construct exits for either long or short-term use.

   a. **Long-Term.** Place the exit over a foundation course, if necessary. Grade the foundation course or compacted subgrade to direct runoff from the construction exits to a sediment trap as shown on the plans or as directed. Construct exits with a width of at least 14 ft. for one-way and 20 ft. for two-way traffic for the full width of the exit, or as directed.

      (1) Type 1. Construct to a depth of at least 8 in. using crushed aggregate as shown on the plans or as directed.
      (2) Type 2. Construct using railroad ties and timbers as shown on the plans or as directed.

   b. Short-Term.

      (1) Type 3. Construct using crushed aggregate, plywood, or wafer board. This type of exit may be used for daily operations where long-term exits are not practical.
      (2) Type 4. Construct as shown on the plans or as directed.

6. **Earthwork for Erosion Control.** Perform excavation and embankment operations to minimize erosion and to remove collected sediments from other erosion control devices.

   a. **Excavation and Embankment for Erosion Control Features.** Place earth dikes, swales, or combinations of both along the low crown of daily lift placement, or as directed, to prevent runoff spillover. Place swales and dikes at other locations as shown on the plans or as directed to prevent runoff spillover or to divert runoff. Construct cuts with the low end blocked with undisturbed earth to prevent erosion of hillsides. Construct sediment traps at drainage structures in conjunction with other erosion control measures as shown on the plans or as directed.

      Where required, create a sediment basin providing 3,600 cu. ft. of storage per acre drained, or equivalent control measures for drainage locations that serve an area with 10 or more disturbed acres at one time, not including offsite areas.

   b. **Excavation of Sediment and Debris.** Remove sediment and debris when accumulation affects the performance of the devices, after a rain, and when directed.

7. **Construction Perimeter Fence.** Construct, align, and locate fencing as shown on the plans or as directed.
   a. **Installation of Posts.** Embed posts 18 in. deep or adequately anchor in rock, with a spacing of 8 to 10 ft.
   b. **Wire Attachment.** Attach the top wire to the posts at least 3 ft. from the ground. Attach the lower wire midway between the ground and the top wire.
   c. **Flag Attachment.** Attach flagging to both wire strands midway between each post. Use flagging at least 18 in. long. Tie flagging to the wire using a square knot.

8. **Sandbags for Erosion Control.** Construct a berm or dam of sandbags that will intercept sediment-laden storm water runoff from disturbed areas, create a retention pond, detain sediment, and release water in sheet flow. Fill each bag with sand so that at least the top 6 in. of the bag is unfilled to allow for proper tying of the open end. Place the sandbags with their tied ends in the same direction. Offset subsequent rows of sandbags 1/2 the length of the preceding row. Place a single layer of sandbags downstream as a secondary debris trap. Place additional sandbags as necessary or as directed for supplementary support to berms or dams of sandbags or earth.

9. Temporary Sediment-Control Fence. Provide temporary sediment-control fence near the downstream perimeter of a disturbed area to intercept sediment from sheet flow. Incorporate the fence into erosion-control measures used to control sediment in areas of higher flow. Install the fence as shown on the plans, as specified in this Section, or as directed.

a. Installation of Posts. Embed posts at least 18 in. deep, or adequately anchor, if in rock, with a spacing of 6 to 8 ft. and install on a slight angle toward the run-off source.

b. Fabric Anchoring. Dig trenches along the uphill side of the fence to anchor 6 to 8 in. of fabric. Provide a minimum trench cross-section of 6 x 6 in. Place the fabric against the side of the trench and align approximately 2 in of fabric along the bottom in the upstream direction. Backfill the trench, then hand-tamp.

c. Fabric and Net Reinforcement Attachment. Unless otherwise shown under the plans, attach the reinforcement to wooden posts with staples, or to steel posts with T-clips, in at least 4 places equally spaced. Sewn vertical pockets may be used to attached reinforcement to end posts. Fasten the fabric to the top strand of reinforcement by hog rings or cord every 15 in. or less.

d. Fabric and Net Splices. Locate splices at a fence post with a minimum lap of 6 in. attached in at least 6 places equally spaced, unless otherwise shown under the plans. Do not locate splices in concentrated flow areas.

Requirements for installation of used temporary sediment-control fence include the following:
- fabric with minimal or no visible signs of biodegradation (weak fibers),
- fabric without excessive patching (more than 1 patch every 15 to 20 ft.),
- posts without bends, and
- backing without holes.

506.5. Measurement.

A. Rock Filter Dams. Installation or removal of rock filter dams will be measured by the foot or by the cubic yard. The measured volume will include sandbags, when used.
1. **Linear Measurement.** When rock filter dams are measured by the foot, measurement will be along the centerline of the top of the dam.
2. **Volume Measurement.** When rock filter dams are measured by the cubic yard, measurement will be based on the volume of rock computed by the method of average end areas.
   a. Installation. Measurement will be made in final position.
   b. Removal. Measurement will be made at the point of removal.

B. Temporary Pipe Slope Drains. Temporary pipe slope drains will be measured by the foot.

C. Baled Hay. Baled hay will be measured by each bale.

D. Temporary Paved Flumes. Temporary paved flumes will be measured by the square yard of surface area. The measured area will include the energy dissipater at the flume outlet.

E. Construction Exits. Construction exits will be measured by the square yard of surface area.

F. Earthwork for Erosion Control.
1. **Equipment.** Equipment use will be measured by the actual number of hours the equipment is operated.
2. **Volume Measurement.**
   a. In Place.
   (1) Excavation. Excavation will be measured by the cubic yard in its original position and the volume computed by the method of average end areas.

(2) Embankment. Embankment will be measured by the cubic yard in its final position by the method of average end areas. The volume of embankment will be determined between:
- the original ground surfaces or the surface upon that the embankment is to be constructed for the feature and
- the lines, grades and slopes of the accepted embankment for the feature.

b. In Vehicles. Excavation and embankment quantities will be combined and paid for under "Earthwork (Erosion and Sediment Control, In Vehicles)." Excavation will be measured by the cubic yard in vehicles at the point of removal. Embankment will be measured by the cubic yard in vehicles measured at the point of delivery. Shrinkage or swelling factors will not be considered in determining the calculated quantities.

G. Construction Perimeter Fence. Construction perimeter fence will be measured by the foot.

H. Sandbags for Erosion Control. Sandbags will be measured as each sandbag or by the foot along the top of sandbag berms or dams.

I. Temporary Sediment-Control Fence. Temporary sediment-control fence will be measured by the foot.

506.6. Payment. The following will not be paid for directly but are subsidiary to pertinent Items:
- erosion-control measures for Contractor project-specific locations (PSLs) inside and outside the right of way (such as construction and haul roads, field offices, equipment and supply areas, plants, and material sources);
- removal of litter;
- repair to devices and features damaged by Contractor operations;
- added measures and maintenance needed due to negligence, carelessness, lack of maintenance, and failure to install permanent controls;
- removal and reinstallation of devices and features needed for the convenience of the Contractor;
- finish grading and dressing upon removal of the device; and
- minor adjustments including but not limited to plumbing posts, reattaching fabric, minor grading to maintain slopes on an erosion embankment feature, or moving small numbers of sandbags.

The Contractor will be reimbursed in accordance with pertinent Items or Article 9.5, "Force Account," for maintenance, repair, or reinstallation of devices and features when the need for additional control measures cannot be attributed to the above, as determined by the Engineer. Stabilization of disturbed areas will be paid for under pertinent Items.

Furnishing and installing pipe for outfalls associated with sediment traps and ponds will not be paid for directly but is subsidiary to the excavation and embankment under this Item.

A. Rock Filter Dams. The work performed and materials furnished in accordance with this Item and measured as provided under "Measurement" will be paid for at the unit price bid as follows:

1. **Installation.** Installation will be paid for as "Rock Filter Dams (Install)" of the type specified. This price is full compensation for furnishing and operating equipment, finish backfill and grading, lacing, proper disposal, labor, materials, tools, and incidentals.
2. **Removal.** Removal will be paid for as "Rock Filter Dams (Remove)." This price is full compensation for furnishing and operating equipment, proper disposal, labor, materials, tools, and incidentals.

When the Engineer directs that the rock filter dam installation or portions thereof be replaced, payment will be made at the unit price bid for "Rock Filter Dams (Remove)" and for "Rock Filter Dams (Install)" of the type specified. This price is full compensation for furnishing and operating equipment, finish backfill and grading, lacing, proper disposal, labor, materials, tools, and incidentals

B. Temporary Pipe Slope Drains. The work performed and materials furnished in accordance with this Item and measured as provided under "Measurement" will be paid for at the unit price bid for "Temporary Pipe Slope Drains" of the size specified. This price is full compensation for furnishing materials, removal and disposal, furnishing and operating equipment, labor, tools, and incidentals.

Removal of temporary pipe slope drains will not be paid for directly but is subsidiary to the installation Item. When the Engineer directs that the pipe slope drain installation or portions thereof be replaced, payment will be made at the unit price bid for "Temporary Pipe Slope Drains" of the size specified. This price is full compensation for the removal and reinstallation of the pipe drain.

Earthwork required for the pipe slope drain installation, including construction of the sediment trap, will be measured and paid for under Section 506.5.F, "Earthwork for Erosion and Sediment Control."

Riprap concrete or stone, when used as an energy dissipater or as a stabilized sediment trap, will be measured and paid for in accordance with Item 432, "Riprap."

C. Baled Hay. The work performed and materials furnished in accordance with this Item and measured as provided under "Measurement" will be paid for at the unit price bid for "Baled Hay." This price is full compensation for furnishing and placing bales, excavating trenches, removal and disposal, equipment, labor, tools, and incidentals.

When the Engineer directs that the baled hay installation (or portions thereof) be replaced, payment will be made at the unit price bid for "Baled Hay," which is full compensation for removal and reinstallation of the baled hay.

D. Temporary Paved Flumes. The work performed and materials furnished in accordance with this Item and measured as provided under "Measurement" will be paid for at the unit price bid for "Temporary Paved Flume (Install)" or "Temporary Paved Flume (Remove)." This price is full compensation for furnishing and placing materials, removal and disposal, equipment, labor, tools, and incidentals.

When the Engineer directs that the paved flume installation or portions thereof be replaced, payment will be made at the unit prices bid for "Temporary Paved Flume (Remove)" and "Temporary Paved Flume (Install)." These prices are full compensation for the removal and replacement of the paved flume and for equipment, labor, tools, and incidentals.

Earthwork required for the paved flume installation, including construction of a sediment trap, will be measured and paid for under Section 506.5.F, "Earthwork for Erosion and Sediment Control."

E. Construction Exits. Contractor-required construction exits from off-right of way locations or on-right of way PSLs will not be paid for directly but are subsidiary to pertinent Items.

The work performed and materials furnished in accordance with this Item and measured as provided under "Measurement" for construction exits needed on right of way access to work areas required by the Department will be paid for at the unit price bid for "Construction Exits (Install)" of the type specified or "Construction Exits (Remove)." This price is full compensation for furnishing and placing materials, excavating, removal and disposal, cleaning vehicles, labor, tools, and incidentals.

When the Engineer directs that a construction exit or portion thereof be removed and replaced, payment will be made at the unit prices bid for "Construction Exit (Remove)" and "Construction Exit (Install)" of the type specified. These prices are full compensation for the removal and replacement of the construction exit and for equipment, labor, tools, and incidentals.

Construction of sediment traps used in conjunction with the construction exit will be measured and paid for under Section 506.5.F, "Earthwork for Erosion and Sediment Control."

F. Earthwork for Erosion and Sediment Control. The work performed and materials furnished in accordance with this Item and measured as provided under "Measurement" will be paid for at the unit price bid for "Excavation (Erosion and Sediment Control, In Place)," "Embankment (Erosion and Sediment Control, In Place)," "Earthwork (Erosion and Sediment Control, In Vehicles)," "Dragline Work (Erosion and Sediment Control)," "Backhoe Work (Erosion and Sediment Control)," "Excavator Work (Erosion and Sediment Control)," "Front End Loader Work (Erosion and Sediment Control)," "Blading Work (Erosion and Sediment Control)," "Scraper Work (Erosion and Sediment Control)," or "Bulldozer Work (Erosion and Sediment Control)."

This price is full compensation for excavation including removal of accumulated sediment in various erosion control installations as directed, hauling, and disposal of material not used elsewhere on the project; excavation for construction of erosion-control features; embankments including furnishing material from approved sources and construction of erosion-control features; sandbags; plywood; stage construction for curb inlets involved in curb-inlet sediment traps; and equipment, labor; tools, and incidentals.

Earthwork needed to remove and obliterate of erosion-control features will not be paid for directly but is subsidiary to pertinent Items unless otherwise shown on the plans. Sprinkling and rolling required by this Item will not be paid for directly, but will be subsidiary to this Item.

G. Construction Perimeter Fence. The work performed and materials furnished in accordance with this Item and measured as provided under "Measurement" will be paid for at the unit price bid for "Construction Perimeter Fence." This price is full compensation for furnishing and placing the fence; digging, fence posts, wire, and flagging; removal and disposal; and materials, equipment, labor, tools, and incidentals.

Removal of construction perimeter fence will be not be paid for directly but is subsidiary to the installation Item. When the Engineer directs that the perimeter fence installation or portions thereof be removed and replaced, payment will be made at the unit price bid for "Construction Perimeter Fence," which is full compensation for the removal and reinstallation of the construction perimeter fence.

H. Sandbags for Erosion Control. Sandbags will be paid for at the unit price bid for "Sandbags for Erosion Control" (of the height specified when measurement is by the foot). This price is full compensation for materials, placing sandbags, removal and disposal, equipment, labor, tools, and incidentals.

Removal of sandbags will not be paid for directly but is subsidiary to the installation Item. When the Engineer directs that the sandbag installation or portions thereof be replaced, payment will be made at the unit price bid for "Sandbags for Erosion Control," which is full compensation for the reinstallation of the sandbags.

I. Temporary Sediment-Control Fence. The work performed and materials furnished in accordance with this Item and measured as provided under "Measurement" will be paid for at the unit price bid for "Temporary Sediment-Control Fence." This price is full compensation for furnishing and placing the fence; trenching, fence posts, fabric and backfill; removal and disposal; and equipment, labor, tools, and incidentals.

Removal of temporary sediment-control fence will not be paid for directly but is subsidiary to the installation Item. When the Engineer directs that the temporary sedimentation control fence installation or portions thereof be replaced, payment will be made at the unit price bid for "Temporary Sediment-Control Fence," which is full compensation for the removal and reinstallation of the temporary sediment-control fence.