ATTACHMENT F
Prototypical Area Engineer and Maintenance Facility Construction Documents Standards for Fort Worth District Headquarters

THIS PAGE LEFT BLANK INTENTIONALLY

INFORMATION AVAILABLE ONLY BY INTERNET OR BY DISC

http://www.dot.state.tx.us/mnt/contract/rfp.htm

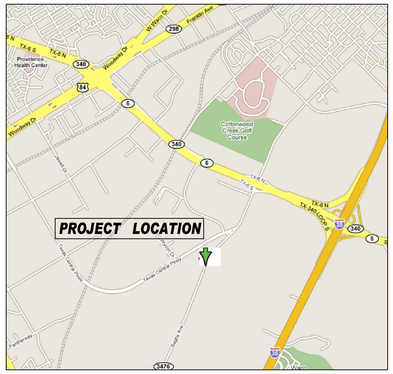

VICINITY MAP
(NOT TO SCALE)
7203 BAGBY AVENUE
McLENNAN COUNTY, TEXAS.
WACO DISTRICT

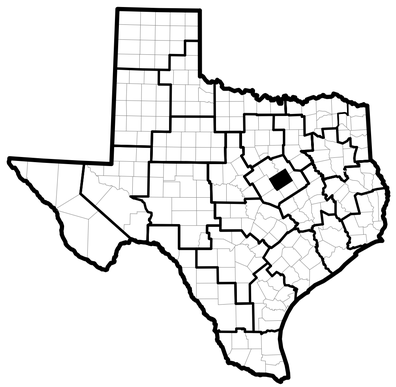

Mc LENNAN COUNTY, TEXAS

WACO AREA
ENGINEER AND MAINTENANCE FACILITY

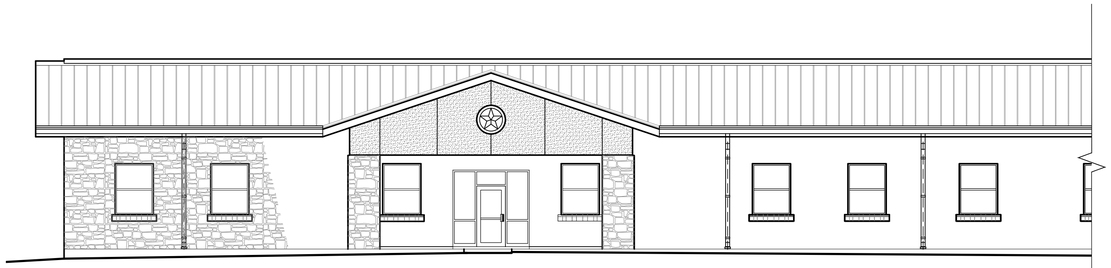

SITE NUMBER:
099071

BUILDING SUMMARY:

BUILDING 1	7,507 SQ. FT. @ OFFICE BUILDING #098020
BUILDING 2	8,683 SQ. FT. @ LABORATORY / SHOP BUILDING #098021
BUILDING 3	4,000 SQ. FT. @ VEHICLE STORAGE BUILDING #098022
BUILDING 4	1733 SQ. FT. @ WASH BAY BUILDING #098028

PARKING SUMMARY:
46 - 11' x 20' SPACES
2 - VAN ACCESSIBLE SPACES

48 - TOTAL SPACES PROVIDED

BUILDING CODES:
International Building Code - 2006
National Electric Code - 2005
Uniform Plumbing Code - 2003
Uniform Mechanical Code - 2003
State Energy Code (ASHRAE Standard 90.1-2004)

SITE SUMMARY:
TOTAL ACRES - 20 ACRES

HR SUMMARY:
TOTAL FTE - 60

SCOPE OF WORK:

THIS PROJECT INCLUDES THE CONSTRUCTION OF AN OFFICE BUILDING, LABORATORY / SHOP AND VEHICLE STORAGE BUILDING, A WASH BAY AND A FUEL STATION. SITE IMPROVEMENT WORK INCLUDES SERVICE UTILITIES, ASPHALT AND CONCRETE DRIVES, PARKING LOTS, SECURITY FENCING AND LANDSCAPING ON AN EXISTING TxDOT SITE.

Texas Department of Transportation - Maintenance Division
150 East Riverside Drive
Austin, Texas 78704
(512) 416-3048

AREA ENGINEER AND MAINTENANCE FACILITY
Austin, Texas
Karl Oberlander, PMP, RA - Project Manager - (512) 416-2463

Copyright © 2006 Texas Department of Transportation

PROJECT:
WACO AREA ENGINEER AND MAINTENANCE FACILITY

7203 BAGBY AVENUE, McLENNAN COUNTY,
TEXAS.

WACO DISTRICT - 09
PROJECT NUMBER: CBC-4704-00-672

INDEX OF DRAWINGS

COVERSHEET

GENERAL
G1.1 ABBREVIATIONS AND SYMBOLS
G1.2 TEXAS ACCESSIBILITY STANDARDS

CIVIL
C1.0 CIVIL NOTES
C2.0 HORIZONTAL CONTROL PLAN
C3.0 SITE GRADING AND DRAINAGE PLAN
C4.0 SITE PAVING PLAN
C5.0 WATER AND WASTEWATER PLAN
C6.0 WASTEWATER PROFILES
C7.0 ON SITE SEWAGE FACILITY PLAN
C8.0 OSSF DETAILS
C8.1 OSSF DETAILS
C9.0 MISC. DETAILS
C10.0 STORM WATER POLLUTION PREVENTION PLAN

ARCHITECTURAL
A1.0 SITE PLAN
A1.1 SITE SPOT ELEVATIONS PLAN
A1.2 SITE DETAILS
A1.3 GATE & FENCE DETAILS
A2.0 CODE COMPLIANCE SHEET
A2.1 FLOOR PLAN – OFFICE
A2.2 FLOOR PLAN – LAB/SHOP
A2.3 FLOOR PLAN – VEHICLE STORAGE
A2.4 FLOOR PLAN/ELEVATIONS – WASH BAY
A3.1 ROOF PLAN – OFFICE
A3.2 ROOF PLAN – LAB/SHOP
A3.3 ROOF PLAN – WASH BAY & VEHICLE STORAGE
A3.4 ROOF DETAILS
A3.5 ROOF DETAILS
A4.1 REFLECTED CEILING PLAN – OFFICE
A4.2 REFLECTED CEILING PLAN – LAB/SHOP
A5.1 EXTERIOR ELEVATIONS – OFFICE
A5.2 EXTERIOR ELEVATIONS – LAB/SHOP
A5.3 EXTERIOR ELEVATIONS – VEHICLE STORAGE
A6.1 TOILETS– PLANS & ELEVATIONS
A6.2 MILLWORK ELEVATIONS
A6.3 MILLWORK DETAILS
A7.1 BUILDING SECTIONS – OFFICE
A7.2 BUILDING SECTION – LAB/SHOP & WASH BAY
A8.1 PARTITION TYPES
A8.2 WALL SECTIONS
A8.3 WALL SECTIONS
A8.4 WALL SECTIONS
A8.5 WALL SECTIONS
A8.6 WALL SECTIONS/DETAILS – WASH BAY
A8.7 WALL SECTIONS/DETAILS – WASH BAY
A9.1 FINISH SCHEDULE & DETAILS
A9.2 DOOR SCHEDULE – DOOR & WINDOW TYPES
A9.3 DOOR DETAILS
A9.4 WINDOW AND DOOR DETAILS
A9.5 PLAN DETAILS
A9.6 DETAILS

STRUCTURAL
S1.1 STRUCTURAL NOTES/ABBREVIATIONS
S2.1 FOUNDATION PLAN – OFFICE
S2.2 FOUNDATION PLAN – LAB/SHOP
S2.3 FOUNDATION PLAN – VEHICLE STORAGE
S3.1 FOUNDATION DETAILS
S3.2 FOUNDATION DETAILS
S3.3 FOUNDATION DETAILS
S3.4 FOUNDATION DETAILS
S4.1 FRAMING PLAN – OFFICE
S4.2 FRAMING PLAN – LAB/SHOP
S4.3 FRAMING PLAN – VEHICLE STORAGE
S4.4 FRAMING SECTIONS

MECHANICAL
M2.1 MECHANICAL PLAN – OFFICE BUILDING
M2.2 MECHANICAL PLAN – LAB/SHOP BUILDING
M2.3 MECHANICAL PLAN – VEHICLE STORAGE BUILDING
M4.1 MECHANICAL SCHEDULES – 1
M4.2 MECHANICAL SCHEDULES – 2
M5.1 MECHANICAL DETAILS – 1
M5.2 MECHANICAL DETAILS – 2
M5.3 MECHANICAL DETAILS –3

PLUMBING
P2.1 PLUMBING PLAN – OFFICE BUILDING
P2.2 PLUMBING PLAN – LAB/SHOP BUILDING
P2.3 PLUMBING PLAN – WASH BAY
P3.1 PLUMBING RISER DIAGRAMS – SANITARY SEWER
P3.2 PLUMBING RISER DIAGRAMS – DOMESTIC WATER
P4.1 PLUMBING SCHEDULES
P5.1 PLUMBING DETAILS – 1
P5.2 PLUMBING DETAILS – 2
P5.3 PLUMBING DETAILS – 3

ELECTRICAL
PE1.1 PLUMBING & ELECTRICAL SITE PLAN
E2.1 LIGHTING PLAN – OFFICE BUILDING
E2.2 LIGHTING PLAN – LAB/SHOP BUILDING
E2.3 LIGHTING PLAN – VEHICLE STORAGE BUILDING
E2.4 POWER PLAN – OFFICE BUILDING
E2.5 POWER PLAN – LAB/SHOP BUILDING
E2.6 POWER PLAN – VEHICLE STORAGE BUILDING
E2.7 ELECTRICAL PLAN – WASH BAY
E2.8 GAS DETECTION PLAN – LAB/SHOP BUILDING
E2.20 FUEL STATION PLAN – SCHEDULE & ELEVATIONS
E2.21 FUEL STATION PLAN – POWER AND SPECIAL SYSTEMS
E3.1 ELECTRICAL PANEL BOARD SCHEDULES – 1
E4.2 ELECTRICAL PANEL BOARD SCHEDULES – 2
E5.1 ELECTRICAL DETAILS
E5.2 VOICE / DATA DETAILS

AREA ENGINEER AND MAINTENANCE FACILITY
PROJECT NUMBER: CBC-4704-00-672

SCHEDULE OF ABBREVIATIONS

A

A	AMPERE
AB	ANCHOR BOLT
ABV	ABOVE
A/C	AIR CONDITIONING
ACC	ACCESS
ACI	AMERICAN CONCRETE INSTITUTE
ACOUST	ACOUSTICAL
ACU	AIR CONDITIONING UNIT
ADA	AMERICANS WITH DISABILITIES ACT
ADD'L	ADDITIONAL
ADD	ADDITION OR ADDITIVE
ADH	ADHESIVE
ADJ	ADJACENT OR ADJUSTABLE
AFF	ABOVE FINISH FLOOR
AGG	AGGREGATE
AHJ	AUTHORITY HAVING JURISDICTION
AISC	AMERICAN INSTITUTE OF STEEL CONSTRUCTION
ALT	ALTERNATE
ALUM	ALUMINUM
ANC	ANCHOR
APA	AMERICAN PLYWOOD ASSOCIATION
APPROX	APPROXIMATELY
ARCH	ARCHITECT(URAL)
ASM	SMACNA ARCHITECTURAL SHEET METAL MANUAL
ASPH	ASPHALT
ASTM	AMERICAN SOCIETY FOR TESTING OF MATERIALS
ATC	ACOUSTICAL TILE CEILING
AUTO	AUTOMATIC
AUX	AUXILIARY

B

B/F	BELOW FLOOR
BD	BOARD
BEL	BELOW
BET	BETWEEN
BLDG	BUILDING
BLK	BLOCK
BLKG	BLOCKING
BM	BENCH MARK OR BEAM
BOT	BOTTOM
BRG	BEARING
BRZ	BRONZE
BUR	BUILT-UP ROOF(ING)

C

C	CHANNEL OR CONDUIT
CAB	CABINET
CB	CATCH BASIN
C/C	CENTER TO CENTER
CCT	CIRCUIT
CER	CERAMIC
CFM	CUBIC FEET PER MINUTE
CG	CORNER GUARD
CHT	CEILING HEIGHT
CI	CAST IRON
CIP	CAST IRON PIPE OR CAST IN PLACE
CISP	CAST IRON SOIL PIPE
CJ	CONTROL JOINT
CL	CENTERLINE
CLG	CEILING
CLO	CLOSET
CLR	CLEAR
CMU	CONCRETE MASONRY UNIT
CO	CLEANOUT
COMP	COMPOSITION
COMPR	COMPRESSIBLE
CONC	CONCRETE
CONF	CONFER OR CONFERENCE
CONN	CONNECTION
CONST	CONSTRUCTION
CONT	CONTINUOUS
CONTR	CONTRACTOR
CPT	CARPET(ED)
CR	COLD ROLLED
CRC	COLD ROLLED CHANNEL
CSK	COUNTERSINK (SUNK)
CSMT	CASEMENT
CT	CERAMIC TILE
CTR	CENTER
CW	COLD WATER

D

D	DEPTH OR DRAIN
DBL	DOUBLE
DC	DIRECT CURRENT
DCO	DOUBLE CLEANOUT
DEMO	DEMOLITION
DET	DETAIL
DF	DRINKING FOUNTAIN
DHW	DOMESTIC HOT WATER
DI	DUCTILE IRON
DIA	DIAMETER
DIAG	DIAGONAL
DN	DOWN
DR	DOOR OR DRIVE
DS	DOWNSPOUT
DTL	DETAIL
DWC	DRYWALL CHANNEL
DWG	DRAWING
DWL	DOWEL

E

E	EAST
EA	EACH
ECJ	EDGE CONTROL JOINT
EEW	EMERGENCY EYE WASH
EF	EACH FACE
EIFS	EXTERIOR INSULATION AND FINISH SYSTEM
EJ	EXPANSION JOINT
EL	ELEVATOR
ELEC	ELECTRIC(AL)
ELEV	ELEVATION
EMER	EMERGENCY
EMH	ELECTRICAL MANHOLE
EQ	EQUAL
EQUIP	EQUIPMENT
ESE	EMERGENCY EYE SHOWER
EW	EACH WAY
EW-EF	EACH WAY – EACH FACE
EWC	ELECTRIC WATER COOLER
EWH	ELECTRIC WATER HEATER
EXH	EXHAUST
EXIST	EXISTING
EXP	EXPOSED
EXP JT	EXPANSION JOINT
EXT	EXTERIOR
EXTEN	EXTENSION

F

F	FIRE PIPE
FA	FIRE ALARM
FCO	FLOOR CLEANOUT
FD	FLOOR DRAIN
FDC	FIRE DEPT. CONNECTION
FDN	FOUNDATION
FE	FIRE EXTINGUISHER
FEC	FIRE EXTINGUISHER CABINET
FF	FINISH FLOOR
FFE	FINISH FLOOR EXISTING
FH	FIRE HYDRANT
FHC	FIRE HOSE CABINET
FIN	FINISH
FIX	FIXTURE
FL	FLOW LINE
FLR	FLOOR
FPRF	FIREPROOFING
FR	FIRE RATED
FRMG	FRAMING
FRP	FIBERGLASS REINFORCED PLASTIC
FS	FLOOR SINK
FT	FEET
FTG	FOOTING
FVC	FIRE VALVE CABINET

G

G	GRILLE OR GAS
GA	GAUGE (GAGE)
GALV	GALVANIZED
GB	GRAB BAR OR GRADE BEAM
GCO	GRADE CLEANOUT
GI	GALVANIZED IRON OR GRATE INLET
GL	GLASS
GND	GROUND
GR	GRADE
GSU	GLAZED STRUCTURAL UNIT
GWB	GYPSUM WALLBOARD
GYP	GYPSUM

H

HB	HOSE BIBB
HC	HANDICAP
HDWE	HARDWARE
HDWD	HARDWOOD
HM	HOLLOW METAL
HND	HAND
HP	HORSE POWER
HORIZ	HORIZONTAL
HR	HOUR
HS	HIGH STRENGTH OR HEADED STUDS
HT	HEIGHT
HTR	HEATER
HVAC	HEATING/VENTILATING/ AIR CONDITIONING
HW	HOT WATER
HWTM	HOT WATER TEMPER– ATURE MAINTENANCE

I

ID	INSIDE DIAMETER
IF	INSIDE FACE
IN	INCH
INFO	INFORMATION
INSUL	INSULATION
INT	INTERIOR
INTER	INTERMEDIATE

J

J	JUNCTION
JAN	JANITOR
JB	JUNCTION BOX
JST	JOIST
JT	JOINT

K

KCJ	KEYED CONSTRUCTION JOINT
KIT	KITCHEN
KV	KILOVOLT
KVA	KILOVOLT–AMPERE
KW	KILOWATT
KWH	KILOWATT–HOUR

L

L	LENGTH
LAM	LAMINATE
LAV	LAVATORY
LF	LINEAR FEET
LH	LEFT HAND
LL	LIVE LOAD
LLH	LONG LEG HORIZONTAL
LLV	LONG LEG VERTICAL
LOC	LOCATE OR LOCATION
LONG	LONGITUDINAL
LP	LOW POINT
LT	LIGHT(S)
LTG	LIGHTING
LT WT	LIGHT WEIGHT
LVL	LEVEL

M

M	MOTOR
MAINT	MAINTENANCE
MANUF	MANUFACTURER
MAS	MASONRY
MAT'L	MATERIAL
MAX	MAXIMUM
M.B.M.	METAL BUILDING MANUFACTURER
MBR	MEMBER
MDP	MAIN DISTRIBUTION PANEL
MECH	MECHANICAL
MEP	MECHANICAL/ELECTRICAL/ PLUMBING
MFR	MANUFACTURER
MG	MIRROR GLASS
MH	MANHOLE
MIN	MINIMUM
MJA	SEALANT JOINT
	SHAPE DETAIL
MO	MASONRY OPENING
MPH	MILES PER HOUR
MTG	MOUNTING OR MOUNTED
MTL	METAL

N

N	NORTH
NFWH	NON–FREEZE WALL HYDRANT
NFYH	NON–FREEZE YARD HYDRANT
NIC	NOT IN CONTRACT
NO	NUMBER
NOM	NOMINAL
NTS	NOT TO SCALE

O

OA	OUTSIDE AIR
OC	ON CENTER
OCEW	ON CENTER –EACH WAY
OD	OUTSIDE DIAMETER
OF	OUTSIDE FACE
OFD	OVERFLOW DRAIN
OH	OVERHEAD
OPNG	OPENING
OPP	OPPOSITE
OSL	OUTSIDE LEG
OZ	OUNCES

P

PART	PARTITION
PL	PROPERTY LINE OR PLATE
PLAM	PLASTIC LAMINATE
PLAS	PLASTER
PLF	POUNDS PER LINEAR FOOT
PLYWD	PLYWOOD
PNL	PANEL
PR	PAIR
PROV	PROVIDE
PSF	POUNDS PER SQUARE FOOT
PSI	POUNDS PER SQUARE INCH
PSIG	POUNDS PER SQUARE INCH GAGE
PT	POINT
PTD	PAPER TOWEL DISPENSER OR PAINTED
PVC	POLYVINYL CHLORIDE
PVMT	PAVEMENT

Q

QT	QUARRY TILE
QTY	QUANTITY

R

R	RISER OR REGISTER
RA	RETURN AIR
RAD	RADIUS OR RETURN AIR DUCT
RCP	REFLECTED CEILING PLAN
RD	ROOF DRAIN
RE	REFER TO
REF	REFERENCE
REFL	REFLECTED
REINF	REINFORCING (REINFORCED)
REM	REMARK OR REMOVE
REQ'D	REQUIRED
RET	RETAINING
REV	REVERSE OR REVISED
RH	RIGHT HAND
RM	ROOM
RO	ROUGH OPENING
RPM	REVOLUTIONS PER MINUTE
RPZ	REDUCED PRESSURE PRINCIPAL BACKFLOW PREVENTER
RTU	ROOF TOP UNIT

S

S	SOUTH
SA	SUPPLY AIR
SAN	SANITARY
SAT	SUSPENDED ACOUSTICAL TILE
SC	SCALE
SCH	SCHEDULE
SCW	SOLID CORE WOOD
SD	SMOKE DAMPER OR STORM DRAIN
SECT	SECTION
SF	SUPPLY FAN OR SQUARE FEET
SGFT	STRUCTURAL GLAZED FACING TILE
SH	SPRINKLER HEAD
SHT	SHEET
SIM	SIMILAR
SJ	SAWED JOINT
SM	SPRINKLER MAIN
SMACNA	SHEET METAL AND AIR CONDITIONING CONTRACTORS NATIONAL ASSOCIATION
SPC	SPACE
SPEC	SPECIFICATION
SPEC'D	SPECIFIED
SQ	SQUARE
SS	SERVICE SINK OR SANITARY SEWER
SSM	SOLID SURFACE MATERIAL

SHT	SHEET
SIM	SIMILAR
SJ	SAWED JOINT
SM	SPRINKLER MAIN
SMACNA	SHEET METAL AND AIR CONDITIONING CONTRACTORS NATIONAL ASSOCIATION
SPC	SPACE
SPEC	SPECIFICATION
SPEC'D	SPECIFIED
SQ	SQUARE

SSMH	SANITARY SEWER MANHOLE
SSTL	STAINLESS STEEL
STA	STATION
STD	STANDARD
STIFF	STIFFENER
STIR	STIRRUP
STL	STEEL
STOR	STORAGE
STR	STRUCTURAL
SUPT	SUPPORT
SUSP	SUSPENDED
SV	SHEET VINYL
SVC	SERVICE
SW	SWITCH
SYM	SYMMETRICAL

T

T	THICKNESS OR TREAD
TAS	TEXAS ACCESSIBILITY STANDARDS
T&B	TOP AND BOTTOM
TC	TOP OF CURB
TEL	TELEPHONE
TEMP	TEMPERATURE OR TEMPORARY
TH	THRESHOLD
THRU	THROUGH
THR'D	THREADED
TLT	TOILET
TOC	TOP OF CONCRETE
TOS	TOP OF STEEL
TOT	TOTAL
TOW	TOP OF WALL
TP	TOILET PARTITION
TRANS	TRANSVERSE OR TRANSITION
TS	TUBE STEEL
T-STAT	THERMOSTAT
TTD	TOILET TISSUE DISPENSER
TYP	TYPICAL

U

U/G	UNDERGROUND
UL	UNDERWRITERS LABORATORY INC.
UNO	UNLESS OTHERWISE NOTED
UR	URINAL

V

V	VENT OR VOLT
VAC	VACUUM
VB	VINYL BASE
VCT	VINYL COMPOSITION TILE
VERT	VERTICAL
VEST	VESTIBULE
VF	VENTILATION FAN
VIF	VERIFY IN FIELD
VOL	VOLUME
VTR	VENT THROUGH ROOF
VWC	VINYL WALL COVERING
VWF	VINYL WALL FABRIC

W

W	WIDTH, WASTE OR WEST
W/	WITH
W/O	WITHOUT
WC	WATER CLOSET
WD	WOOD
WDW	WINDOW
WH	WATER HEATER OR WALL HYDRANT
WP	WEATHERPROOF OR WORKING POINT
WPFG	WATERPROOFING
WPL	WATERPROOF LOUVER
WS	WATER STOP
WSCT	WAINSCOT
WT	WEIGHT
WV	WATER VALVE
WWF	WELDED WIRE FABRIC
WWM	WELDED WIRE MESH

GENERAL SYMBOLS

- 24.0 NEW CONTOUR
- 20.1 EXIST. SPOT ELEV.
- 24.0 EXIST. CONTOUR
- LEVEL LINE
- D5 DEMOLITION NOTE SYMBOL
- C8 NEW CONSTRUCTION SYMBOL
- A8.4 PARTITION TYPE KEY
- A8.4 PARTITION TYPE KEY
- TA9 TOILET ACCESSORIES KEY NOTE
- X COLUMN GRID LOCATION
- RECEPTION 101 ROOM NAME / NUMBER
- WHEELCHAIR TURNING RADIUS
- 1/A1.1 PLAN / DETAIL ENLARGED
- 1 A1.0 WALL SECTION
- 2 A2.0 BUILDING SECTION
- 1/A1.1 SECTION DETAIL
- 1/A1.1 INTERIOR ELEV. KEY
- 115 DOOR TYPE
- B WINDOW TYPE
- 1 DRAWING TITLE / SCALE
- 1 A1.0 EXTERIOR ELEVATION
- NORTH NORTH NORTH ARROWS
- FE FIRE EXTINGUISHER
- X LOUVER TYPE

ARCHITECTURAL SYMBOLS

SECTION

- CONCRETE
- PRECAST CONCRETE
- CMU
- BRICK
- CAST/CUT STONE
- NATURAL STONE
- STEEL
- ALUMINUM
- BRASS/BRONZE
- FINISHED WOOD
- METAL LATH & PLASTER
- CERAMIC/QUARRY TILE
- GLASS/MIRROR
- GRADE/EARTH
- CARPET
- GRAVEL
- SAND
- CONTINOUS WOOD BLOCKING
- DISCONTINUOUS WOOD SHIM
- PLYWOOD
- SPRAYED FIREPROOFING
- BATT/BLANKET INSULATION
- RIGID INSULATION
- ROOF DECK INSULATION
- GYPSUM SHEATHING
- GYPSUM WALLBOARD
- BACKER ROD & SEALANT
- JOINT FILLER
- ACOUSTICAL CEILING
- PLASTIC LAMINATE
- EXTERIOR INSULATED FINISH SYSTEM (E.I.F.S.)

ELEVATION

- CONCRETE
- BRICK
- BRICK
- BRICK
- GLASS
- CONCRETE
- BRICK
- BRICK
- WOOD
- SAND
- SAND

Texas Department of Transportation
125 E. 11th Street
Austin, Texas 78701-2483
(512) 416-3045

Copyright © 2005 Texas Department of Transportation

THIS DOCUMENT IS RELEASED FOR THE PURPOSE OF INFORMATION ONLY
NOT FOR REGULATORY APPROVAL, PERMITTING, OR CONSTRUCTION.

WACO AREA ENGINEER AND MAINTENANCE FACILITY
WACO, MCLENNAN COUNTY WACO DISTRICT

Revisions

Drawn by: –

Project No. CBC4704-00672
Date 05.21.2007
Sheet No.

G1.1

of 2 sheets

ABBREVIATIONS / SYMBOLS

NOTE: THIS DRAWING WAS CREATED FOR PRODUCTION ON 22" x 34" SHEET SIZE. DO NOT SCALE PRINTS.

CADFILE: T:\MNTFMD02FTW\CBC4704-00-857\02-77-47040035\Acad\prototypical pdfs\waco\Acad\Arch\0672_G1_1.dwg Plotted: Fri. Aug. 07, 2009 @ 1:09 PM By: MBAZAN

MOUNTING HEIGHTS

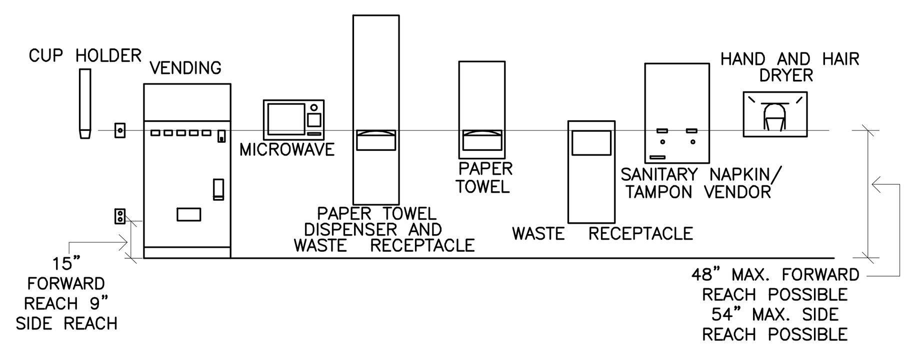

DOOR SIGNAGE MOUNTING HEIGHTS AND LOCATION

CHARACTER PROPORTIONS

LETTERS AND NUMBERS OF SIGNS SHALL HAVE A WIDTH–TO–HEIGHT RATIO OF BETWEEN 3:5 AND 1:1, AND STROKE/WIDTH–TO– HEIGHT RATIO BETWEEN 1:5 AND 1:10

CHARACTER HEIGHT

CHARACTERS AND NUMBERS ON SIGNS SHALL BE SIZED ACCORDING TO THE VIEWING DISTANCE FROM WHICH THEY ARE TO BE READ. THE MINIMUM HEIGHT IS MEASURED USING AN UPPER CASE "X". LOWER CASE CHARACTERS ARE PERMITTED. OVERHEAD SIGNS SHALL HAVE MINIMUM CLEARANCE OF 80" UNDER LOWEST POINT OF THE SIGN. MINIMUM CHARACTER **HEIGHT SHALL BE 3".**

RAISED AND BRAILLE CHARACTER

LETTERS AND NUMERALS SHALL BE RAISED 1/32" MINIMUM UPPER CASE "SANSERIF" OR "SIMPLE SERIF" TYPE AND SHALL BE ACCOMPANIED WITH GRADE 2 BRAILLE. RAISED CHARACTERS SHALL BE AT LEAST 5/8" HIGH, BUT NO HIGHER THAN 2". PICTOGRAMS SHALL BE ACCOMPANIED BY THE EQUIVALENT VERBAL DESCRIPTION PLACED DIRECTLY BELOW PICTOGRAMS. THE BORDER DIMENSION OF PICTOGRAM SHALL BE 6" MIN. IN HEIGHT.

FINISH AND CONTRAST

THE CHARACTERS AND BACKGROUND OF THE SIGNS SHALL BE EGGSHELL, MATTE, OR NON–GLARE FINISH. CHARACTERS AND SYMBOLS SHALL CONTRAST WITH THEIR BACKGROUND.(LIGHT CHARACTERS ON DARK BACKGROUND OR VICE–VERSA)

MOUNTING LOCATIONS AND HEIGHT

SIGNS SHALL BE INSTALLED ON THE WALL ADJACENT TO THE LATCH SIDE OF THE DOOR. IF NO SPACE IS LEFT TO THE LATCH SIDE OF THE DOOR, SUCH AS DOUBLE–LEAF DOORS, SIGN SHALL BE PLACED ON THE NEAREST ADJACENT WALL. MOUNTING HEIGHT SHALL BE 60" ABOVE FINISH FLOOR TO THE CENTERLINE OF THE SIGN. MOUNTING LOCATION SHALL BE SUCH THAT A PERSON MAY APPROACH WITHIN 3" OF SIGNAGE WITHOUT ENCOUNTERING PROTRUDING OBJECT OR STANDING WITHIN THE SWING OF A DOOR.

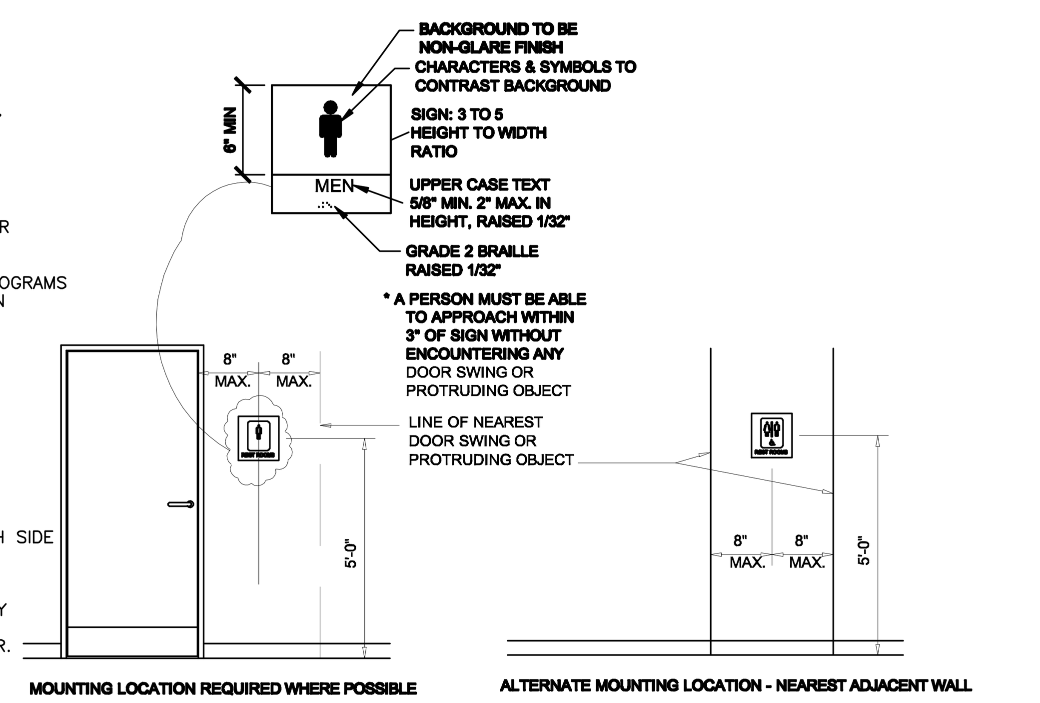

ACCESSIBLE ROUTE

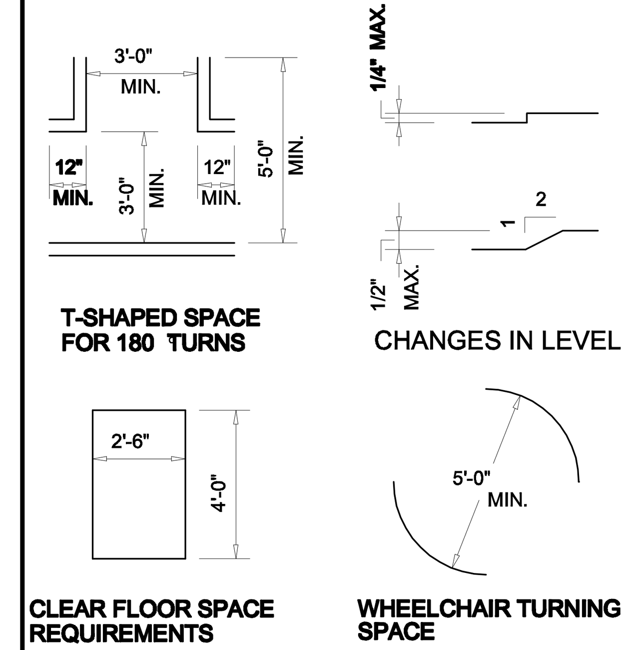

DRINKING FOUNTAINS

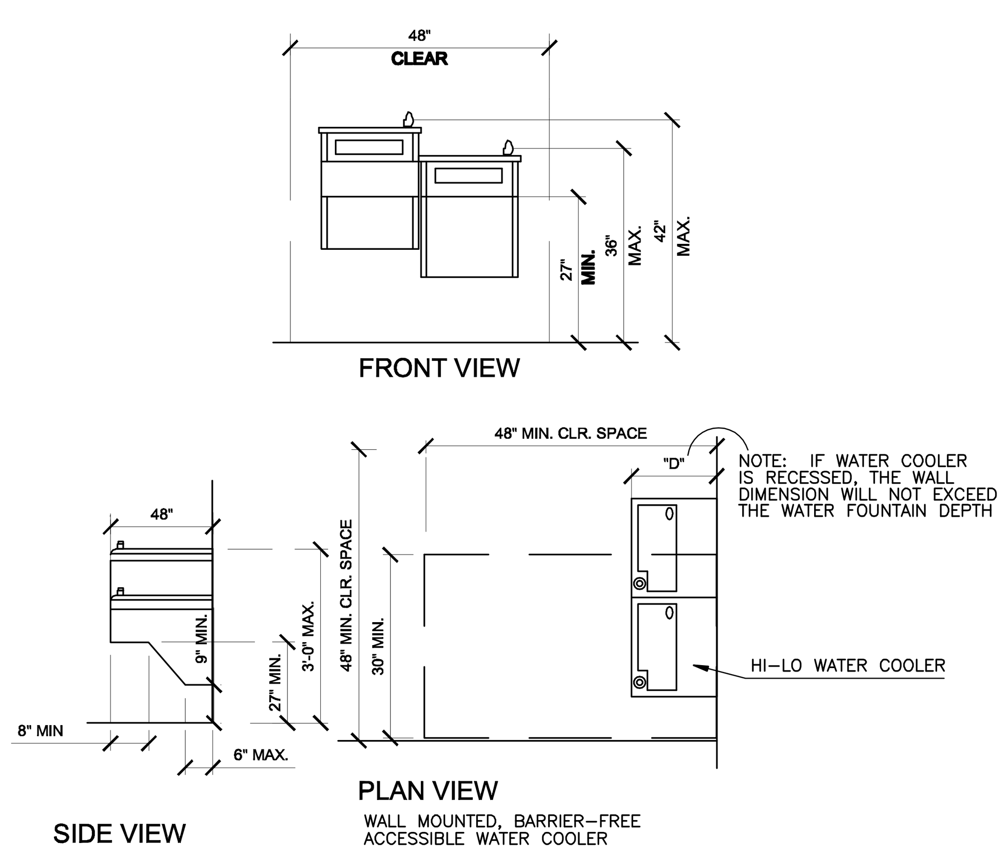

NOTES: 1. SPOUT SHALL BE WITHIN 3" FROM FRONT OF UNIT, FLOW OF WATER SHALL BE MIN. 4" HIGH AND PARALLEL TO FRONT OF UNIT.
2. CONTROLS SHALL BE FRONT–MOUNTED OR SIDE–MOUNTED NEAR THE FRONT. CONTROLS SHALL BE ABLE TO BE OPERATED WITH ONE HAND AND WITH MAX. FORCE OF 5 LBS.

REACHES AND PROTRUDING OBJECTS

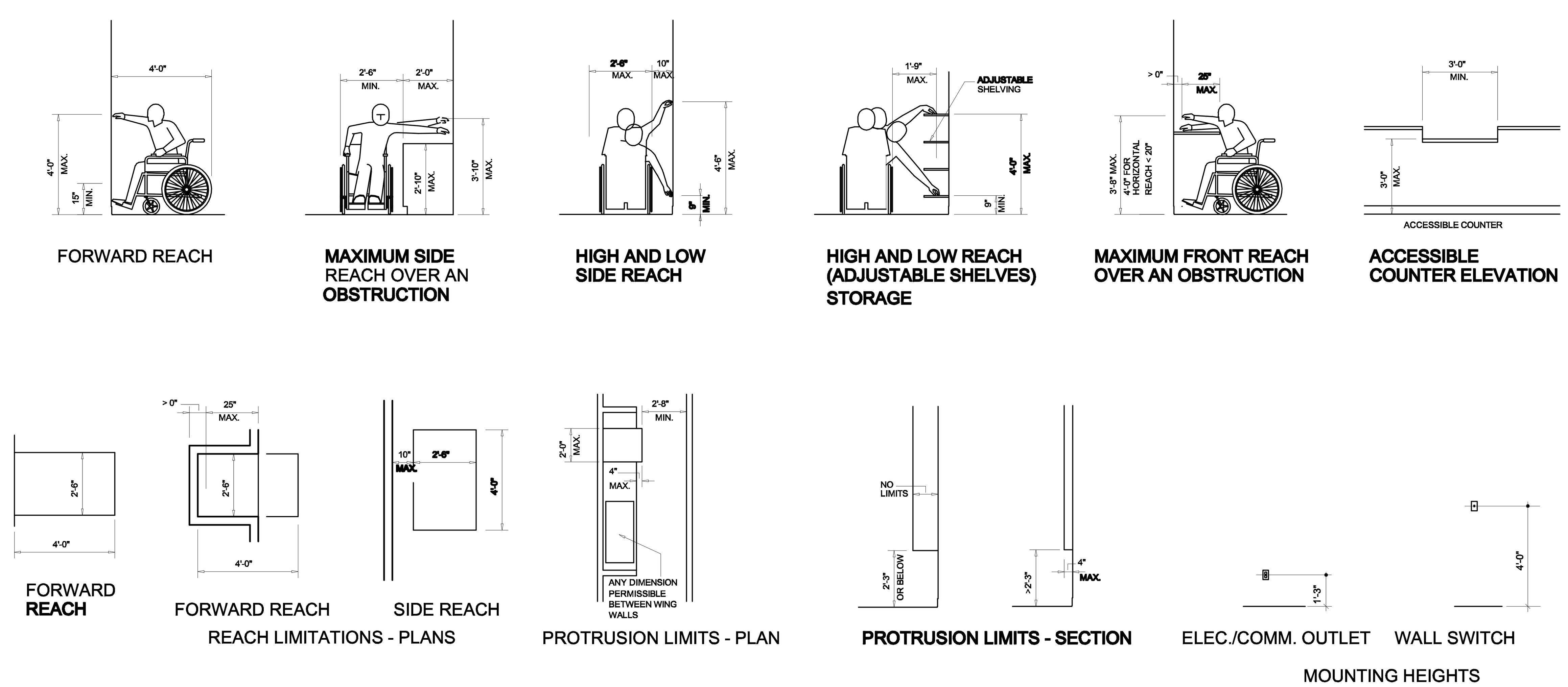

DOORS

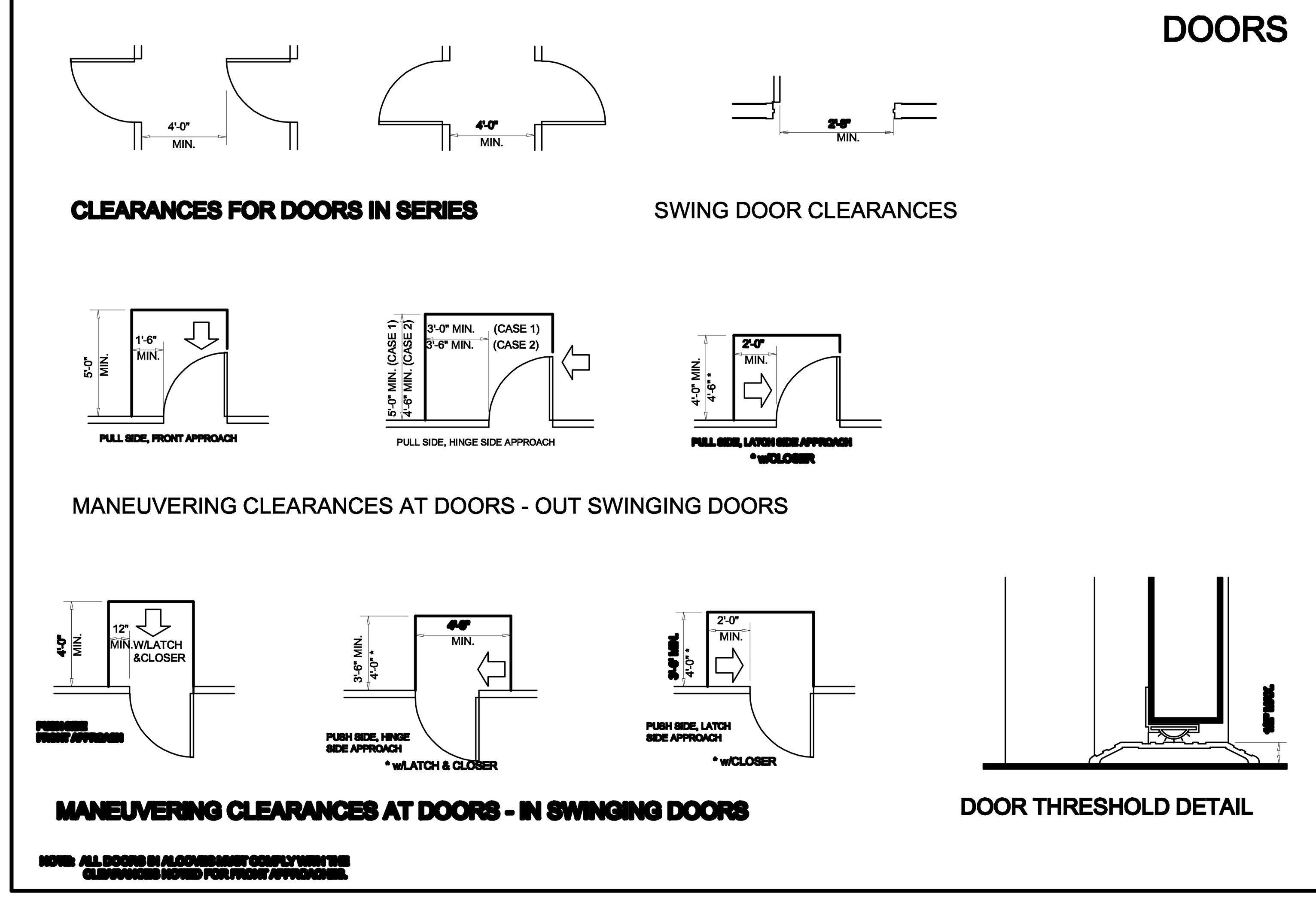

TOILET ROOMS

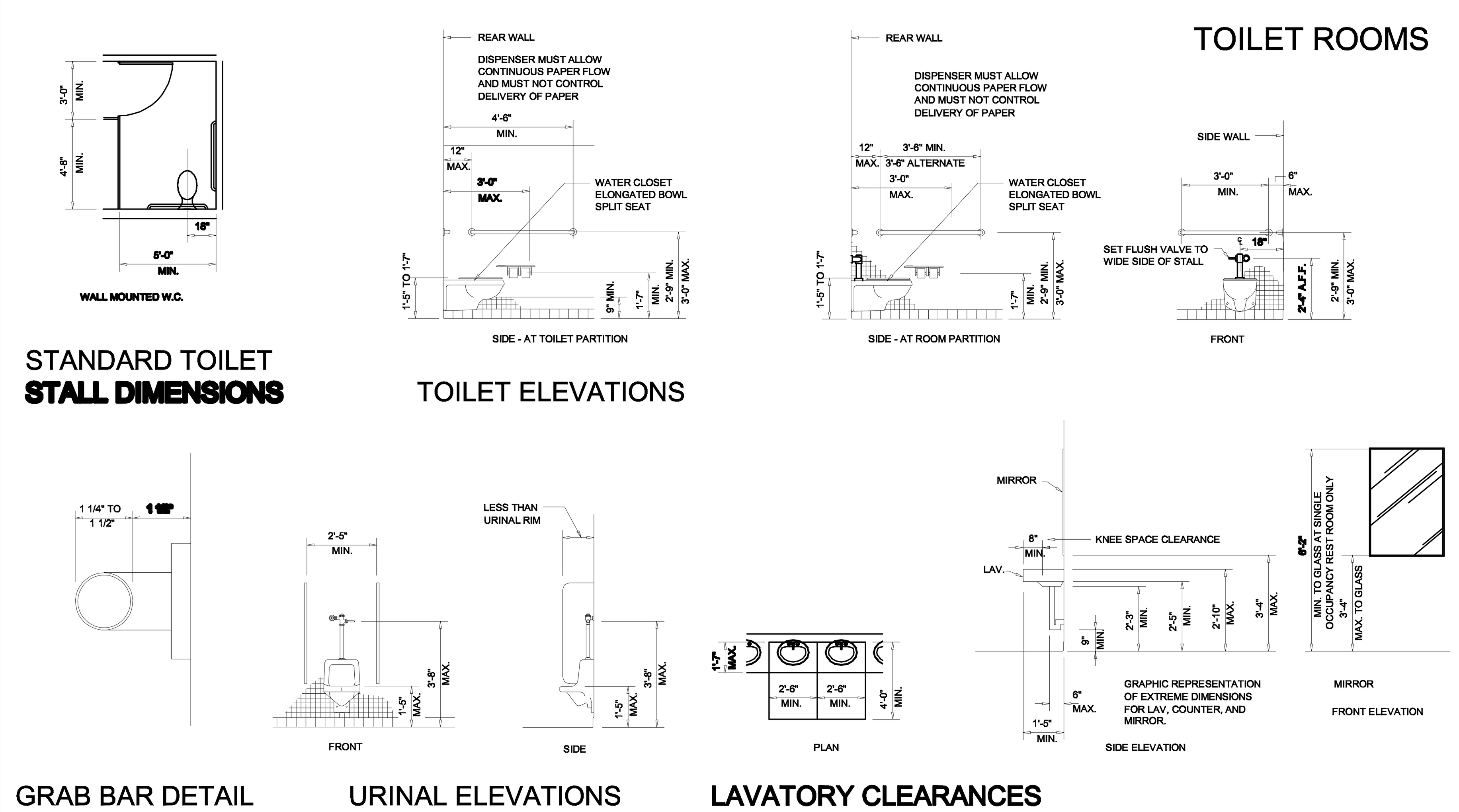

GENERAL NOTES

THIS SHEET IS FOR INFORMATION AND GUIDELINES ONLY
REFER TO ADA AND TAS FOR COMPLETE CRITERIA

1. INFORMATION SHOWN ON THIS SHEET IS THE MINIMUM REQUIRED FOR ADA COMPLIANCE.
2. ALL CONDITIONS SHOWN ON THIS SHEET MAY NOT BE REQUIRED BY THIS PROJECT. COMPARE THE REQUIREMENTS OF THE ARCHITECTURAL DRAWINGS WITH THIS SHEET FOR RELEVANT INFORMATION.
3. NOTIFY THE ARCHITECT IMMEDIATELY OF ANY DISCREPANCIES BETWEEN THE ARCHITECTURAL DRAWINGS AND INFORMATION GIVEN ON THIS SHEET FOR CLARIFICATION.

General Notes:

1. Minimum clear width of accessible route: 36".
2. Running slope shall not exceed 1:20. (Cross slope shall not exceed 1:50).
3. 1/4" to 1/2" changes in level require edge to be beveled with a slope no greater than 1:2.
4. The highest operable part of controls, dispensers, receptacles and other operable equipment shall be placed no higher than 4' and no lower than 1' 3" above the finish floor. These requirements shall apply to controls and operating mechanisms which are expected to be operable by occupants, visitors, or other users of a building or facility and may include but are not limited to, thermostats, light switches, alarm activated devices, ventilators or electrical outlets.
5. Provide solid blocking at all wall mounted accessories.

Ramps:

1. Maximum slope: 1:12.
2. Transitions shall be flush and free of abrupt changes.
3. Maximum slope of adjacent surfaces: 1:20.
4. Maximum clear width: 36".
5. Handrails required if rise exceeds 6" or run exceeds 72".
6. Handrails shall be provided in both sides or the ramp.
7. Inside rail on switch back or dogleg ramps shall be continuous.
8. Where no continuous, rails shall extend at least 12" beyond top and bottom of ramp parallel to the ground surface
9. Height or handrails: 35" (34–36).
10. Clear floor space between rails and any wall shall be 1–1/2".
11. Gripping surfaces shall be uninterrupted by newel posts, other construction elements, or obstructions.
12. Ends shall be rounded, or returned smoothly to floor, wall or post.
13. Handrails shall not rotate in their fittings.
14. Diameter or width of gripping surfaces shall be 1–1/4" to 1–1/2", or shall provide an equivalent gripping surface.
15. All required curb ramps shall have a groove surface w/grooves running perpendicular to route of travel.
16. All required curb ramps will be painted yellow for contrast.
17. Sides of required curb ramps will have a maximum of 1:10 slope.

Stairs:

1. All steps on all flights of stairs shall have uniform riser heights and tread widths. minimum tread depth shall be 11" unless otherwise noted, measured from riser to riser.
2. Underside of nosing shall not be abrupt.
   Radius of curvature at leading tread edge shall not exceed 1/2".
   Risers shall be sloped or underside of nosing shall have an angle not less than 60 degrees.
   Nosing shall project no more than 1–1/2".
3. Handrails are required at both sides of all stairs.
4. Inside rail on switch back or dogleg stairs shall be continuous.
5. Where no continuous, handrail extensions shall be provided as follows:
   Top of stairs flights: Parallel to floor, 12" minimum beyond top riser nosing.
   Bottom of stair flights: continue sloping for one tread width beyond bottom rise, plus 12" minimum parallel to floor.
6. Handrail height: 35" measured from stair nosing.
7. Clear floor space between rail and any wall shall be 1–1/2".
8. Gripping surfaces shall be uninterrupted by newel posts, other construction elements or obstructions.
9. Ends shall be rounded, or returned smoothly to floor, wall or post.
10. Handrails shall not rotate in their fittings.
11. Diameter or width of gripping surface shall be 1–1/4" to 1–1/2", or shall provide an equivalent gripping surface.

Doors:

Re: Clearance diagrams – this sheet

1. Doorways shall provide a clear opening of 32" min., with the door open 90 degrees.
2. Openings more than 24" in depth shall provide a clear opening of 36" minimum.
3. Max. Threshold height: 1/2".
4. Door hardware:
   Handless, pulls, latches, locks and other operating devices shall have a shape that is easy to grasp with one hand and does not require tight grasping, tight pinching or twisting of the wrist to operate.
5. Lever–operated mechanisms, push–type mechanisms, and U–shaped handles are acceptable designs.
6. Hardware required fro passage shall be mounted no higher than 47–1/2" above finished floor.
7. Door Closer: If a door has a closer, then the sweep period of the closer shall be adjusted so that from an open position of 70 degrees, the door will take at least 3 seconds to move to a point 3" from the latch, measured to the leading edge of the floor.
8. Door opening Force: The maximum force for pinching or pulling open a door shall be as follows:
   a. Exterior hinged doors: 8 lb.
   b. Interior hinged doors: 5 lb.
   c. Sliding or folding doors: 5 lb.
9. Automatic Doors and Power–assisted Doors: If an automatic door is used, then it shall comply with ANSI/BHMAA156.10–1985.
   Slowly opening, low powered, automatic doors shall comply with ANSIA156.19–1884.
   Such doors shall not open to back check faster than 3 seconds and shall required no more than 15 lb. to stop door movement.
   If a power–assisted door is used, its door opening force shall comply with forces listed above and its closing force shall comply with ANSIA156.19–1984.

Water Closets:

1. Water closets shall be located 18" to the center line from a side wall or partition.
2. The height to the top of the toilet seat shall be 17" to 19".
3. For water closets not located in toilet stalls, the following grab bars shall be provided, 34" above the finish floor.
   Side Wall: 42" long min., 12" from back wall.
   Back Wall: 36" long min., 12" min. each of water closet center line.
4. Flush controls shall be 28" above the finish floor.
   Controls for flush valves shall be mounted on the west side of toilet areas.
5. Toilet paper dispensers shall be installed on the side wall, below the grab bar, a minimum 19" above the floor, and a maximum 36" from the rear wall.
6. Toilet stalls will have a minimum depth of 7"–11".
7. Toilet stall doors will have no twist type hardware.

Urinals:

1. Urinals shall be wall hang with an elongated rim 17" maximum above the finish floor.
2. Flush controls shall be 44" maximum above the finished floor.

Lavatories and Mirrors:

1. Lavatories shall extend 17" minimum from the wall.
2. Clearance of 29" minimum shall be provided from finish floor to bottom of apron.
3. Knee clearance of 27" minimum shall extend 8" minimum under the edge of the lavatory.
4. Toe clearance of 9" minimum shall be provided for the full depth of the lavatory.
5. Hot water and drain pipes under lavatories shall be insulated or otherwise configured to protect against contact.
6. Mirrors shall be mounted with the bottom edge of the reflecting surface 40" maximum above the finish floor and the top edge 74" max. above finished floor.
7. If medicine cabinets are provided, at least one shall be located with a usable shelf no higher than 43–1/2" above the floor.

Sinks:

1. Knee clearance of 27" high minimum, 30" wide minimum and 19" deep minimum shall be provided underneath sinks.
2. Hot water and drain pipes under lavatories shall be insulated or otherwise configured to protect against contact.

Grab Bars:

1. Diameter or width of gripping surface shall be 1–1/4" to 1–1/2", or the shape shall provide an equivalent gripping surface.
2. The space between grab bars and adjacent walls shall be 1–1/2".
3. Grab bars shall not rotate within their fittings.
4. Grab bars and adjacent wall surfaces shall be free of sharp or abrasive surfaces.
5. Edges shall have a radius of 1/8" minimum.

Alarms:

1. Visual alarm signal appliances shall be placed 80 inches above the highest floor level within the space or 6" below the ceiling, whichever is lower.
2. Alarm system will meet ADA requirements including flashing lights at 100' max. spacing in corridors and eventually leased areas during tenant finish.

Signage:

1. Signs which designate permanent rooms and spaces shall comply with the requirements listed above for: Mounting Location and Height
   Where permanent identification is provided for rooms and spaces, signs shall be installed on the wall adjacent to the latch side of the door.
   Where there is no wall space to the latch side of the door, including at double–leaf doors, signs shall be placed on the nearest adjacent wall.
   Mounting height shall be 60" above the finish floor to the centerline of the sign
2. Exterior traffic crossing from ADA spaces to Building entrances shall receive yellow surface markings 8'–0" wide (min.) and ADA crossing warning signs for auto traffic.

TEXAS ACCESSIBILITY STANDARDS

NOTE: THIS DRAWING WAS CREATED FOR PRODUCTION ON 22" x 34" SHEET SIZE. DO NOT SCALE PRINTS.

Texas Department of Transportation
125 E. 11th Street
Austin, Texas 78701–2483
(512) 416–3048

Copyright © 2005 Texas Department of Transportation

THIS DOCUMENT IS RELEASED FOR THE PURPOSE OF INFORMATION ONLY
NOT FOR REGULATORY APPROVAL, PERMITTING, OR CONSTRUCTION.

WACO AREA ENGINEER AND MAINTENANCE FACILITY
WACO, MCLENNAN COUNTY WACO DISTRICT

Revisions

Drawn by: -
Project No. CBC4704-00672
Date 05.21.2007
Sheet No. G1.2 of 2 sheets

CADFILE: T:\MNTFMD02FTW\CBC4704-00-637\02-77-4704008\37\Acad\prototypical pdfs\waco\Acad\Arch0672_G1_2.dwg Plotted: Fri, Aug. 07, 2009 @ 1:10 PM By: MBAZAN

CIVIL GENERAL NOTES

1. The project includes grading, water line and appurtenances, gravity wastewater line and appurtenances, concrete pavement, sidewalks, curbs, asphalt pavement and an On-Site Sewage Facility. Specific items may have been identified as Future Work by TxDOT. These items are shown on the drawings for information purposes only.
2. The Texas Department of Transportation Standard Specifications, 2004 shall govern materials and methods used to perform this work. Select items not covered by TxDOT SS2004 are to follow the Project Specifications.
3. All water and wastewater improvements shall be constructed in accordance with Texas Commission on Environmental Quality (TCEQ) Chapters 190 and 317 and conform to current AWWA requirements.
4. All construction operations shall be accomplished in accordance with applicable State statutes and U.S. Occupational Safety Department of Labor and Health Administration. Information and related reference materials may be obtained from O.S.H.A. at 611 East 6th Street, Room 303, Austin, Texas.
5. Work to be performed within State right-of-way shall be coordinated with Rick Swinson, TxDOT Roadway Maintenance Supervisor at (254) 772-1200.
6. Local Agency Phone Numbers:
   Sheriff Office: X
   Fire Department:
   Water & Wastewater Department:
   Texas Excavation Safety System: (800) DIG-TESS
7. Contractor shall maintain the job site in a safe, neat, and workman-like manner at all times. Any unattractive nuisance shall be removed or camouflaged by Contractor when directed by the Owner.
8. The Contractor shall be responsible for all coordination between himself and other contractors and utilities in the vicinity of this project. Once the contractor becomes aware of a possible conflict, it is the Contractor's responsibility to notify the Project Inspector within twenty-four (24) hours.
9. All damage caused directly or indirectly by the Contractor or his subcontractors to the street surface or subsurface outside the project limits shall be repaired to the Owner's satisfaction at the Contractor's expense. This includes any scrapes, gouges, cuts, traffic signs and markings, and/or any other damage.
10. Blasting within the project area will not be allowed.
11. The Contractor shall provide at least one chemically treated portable toilet for every 20 workmen on the job site, a minimum of one toilet is required. The unit(s) shall remain on the site during all of the phases of construction. The Contractor shall enforce the use of facilities by all personnel at the site. The unit shall be obscured from public view to the greatest extent practicable.
12. Traffic control and protective devices shall be used and shall conform to the Texas Manual on Uniform Traffic Control Devices for Streets and Highways. Barricades, warning signs, flashing devices, and flagpersons shall be provided by the Contractor. If at any time during construction the Contractor's proposed plan for handling traffic does not provide for the safe, comfortable movement of traffic, the Contractor shall immediately change his operations to correct the unsatisfactory condition. This shall be paid for at the lump sum bid price included in the bid proposal. All traffic control devices shall have ASTM Type III high intensity sheeting.
13. The Contractor shall be responsible for keeping streets adjacent to the project free of mud and construction debris at all times.
14. Contractor shall have in his possession, prior to construction, all necessary permits, and licenses, etc. Contractor shall have at least one set of approved engineering plans and specifications on-site at all times.
15. All construction activities including material storage and staging area shall be within the construction limits indicated on the drawings. Use of the area within the construction limits for these purposes will be restricted to those locations where driver sight distance to businesses and side street intersections is not obstructed and at other locations where an unsightly appearance, as determined by the owner, will not exist.

UTILITIES

1. Contractor shall be responsible for contacting all utility companies at least 48 hours prior to construction. For field location of underground franchise utilities prior to any excavation, Contractor shall notify the Texas Excavation Safety System at (800) DIG-TESS.
2. When an existing water main shut out is necessary or possible, the Contractor shall notify the Project Inspector, and the utility. A minimum of seventy-two (72) hours advance notice for all shut outs shall be provided.
3. All utility work within TxDOT right-of-way requires a Utility Permit from the TxDOT District Office and shall provide traffic control measures in accordance with the TMUTCD.
4. Contractor will be responsible for costs incurred as a result of utility relocations performed for Contractor's convenience.
5. The information shown on these drawings indicating type and location of underground, surface, and aerial utilities is approximate. The Contractor is responsible for determining the location of all utilities affected by construction for this project in order to avoid damaging those utilities and agrees to be fully responsible for any and all damage which might be occasioned by the Contractor's failure to exactly locate and preserve any and all utilities. The Contractor shall immediately arrange for repair and restoration of Contractor damaged utilities; and the Contractor shall pay for such repairs.
7. Water lines two inches or less may be Type K copper, or gasketed PVC Schedule 80 with a minimum rated working pressure of 150 psi.
8. Water lines four (4) inches and greater will be AWWA C-900.
9. Valves less than four (4) inches will be brass ball valves, valves four (4) inches and greater will be iron body gate valves. All valves shall be placed in valve boxes with ball valves in concrete boxes with cast iron lids and gate valves in cast iron boots with cast iron lids. All valve boxes shall be minimum H-20 load rating.
10. All water lines shall be installed with a tracer tape or wire.
11. All water service lines shall be embedded with 6" sand below and around the pipe and 12" of sand over the top of the pipe.
12. All bends 4" and greater shall be restrained joints or blocked.
13. Wastewater lines 4" and greater shall be gasketed PVC SDR26.
14. Install 2'x2'x8" thick reinforced concrete pad around all valve and cleanout stacks not located in flower beds.
15. Install 5'x5'x8" thick reinforced concrete pad around all manholes.
16. All manholes shall have bolt down water tight lids..

PAVING

1. All fill shall be compacted to 95% standard proctor density in a maximum of 6" lifts.
2. All barrier free ramps shall comply with the current TDLR and TxDOT regulations.
3. All exterior flat concrete shall be broom finished.
4. Subgrade shall be scarified or cut and pulverized to a minimum depth of 6". Soils shall be lime stabilized by slurry placement method at a rate of 3% by weight in accordance with Item 260, TxDOT SS2004. All deleterious material shall be removed prior to stabilization and/or compaction. Compaction shall be ordinary compaction in accordance with Item 132, TxDOT SS2004.
5. Flexible base shall be a minimum of 12" Type D, Grade 1 in accordance with Item 247, TxDOT SS2004 under HMAC pavement..
6. The prime coat shall be a MC-30 in accordance with Item 300, TxDOT SS2004, and applied at a rate of 0.2 gal/sy in accordance with Item 310, TxDOT SS2004.
7. The surface treatment shall be a single course treatment constructed in accordance with Item 316, TxDOT SS2004. The asphalt shall be Type AC-20-5TR in accordance with Item 300, TxDOT SS2004 and applied at a rate of 0.4 gal/sy. The aggregate shall be a Type B, Grade 4 in accordance with Item 302, TxDOT SS2004, applied at a rate of 0.01 CY/SY.
8. The pavement surface course shall be 2" of Type C HMAC in accordance with Item 340, TxDOT SS2004.
9. Flexible base course shall be installed in max. 6", min. 3" lifts. The curb and gutters shall be constructed upon the first course. The final course of flexible base shall be placed following a minimum 72 hours curing time for the curb and gutter.
10. HMAC pavement shall not be placed in concrete gutters.

ENVIRONMENTAL

1. The placement of erosion/sedimentation controls shall be in accordance with the plans and in place prior to other construction related activities.
2. No soil distrubing activities shall occur prior to the SWP3 and associtated best management practices being fully implemented and inspected by the TxDOT District Environmental Coordinator. The Contractor shall schedule the on-site meeting.
3. Seeding for erosion control shall be in accordance with Items 164 and 166, TXDOT SS2004, for the Waco District #9, Permanent Urban Seed Mix; Clay Soils; Bermudagrass.
4. SWP3 to be funished by Owner. Reference sheet C10.0 for plan.
5. The Notice of Intent (NOI) shall be posted in a location viewable to the public until construction is complete and Notice of Termintation (NOT) submitted.
6. The Contractor or its representative shall review the site weekly and after any major storm. Adjustments / repairs shall be made as needed and the District Environmental Coordinator notified of adjustments.
7. Contractor shall revegitate disturbed areas upon completion of grading activities.
8. Excess excavated material shall not be desposited in low areas or along natural drainage ways. If the Contractor places excess material in drainage ways, he shall be responsible for all damage resulting from such fill and he shall remove the material at his cost.
9. Upon the completion of construction, the right-of-way landscaping shall be restored.

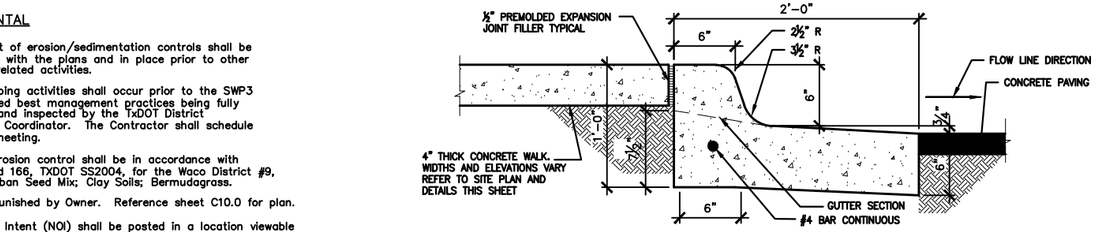

SUBGRADE TREATMENT: 3% LIME
FLEXIBLE BASE: TYPE D, GRADE 1
PRIME COAT: TYPE MC-30, APPLICATION RATE 0.2 GAL/SY
SURFACE TREATMENT SINGLE COURSE:
AGGREGATE: TYPE B, GRADE 4, APPLICATION RATE 0.01 CY/SY
ASPHALT: TYPE AC-20-5TR, APPLICATION RATE 0.4 GAL/SY
PAVEMENT SURFACE: 2" HMAC TYPE C.

1 FLEXIBLE BASE PAVEMENT SECTION
SCALE: NTS

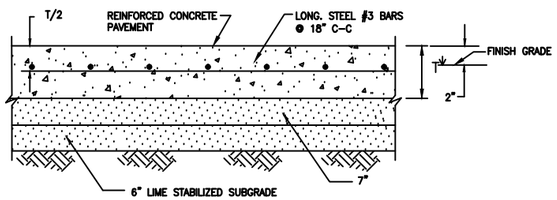

NOTE: CONCRETE PAVEMENT THICKNESS (T) SHALL BE 7" AT APRONS AND FUEL STATION

2 REINFORCED APRON PAVEMENT SECTION
SCALE: NTS

3 CURB AND GUTTER SECTION - SPILL
SCALE: NTS

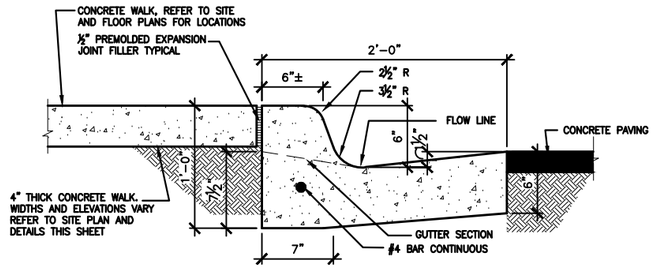

4 CURB AND GUTTER SECTION - CATCH
SCALE: NTS

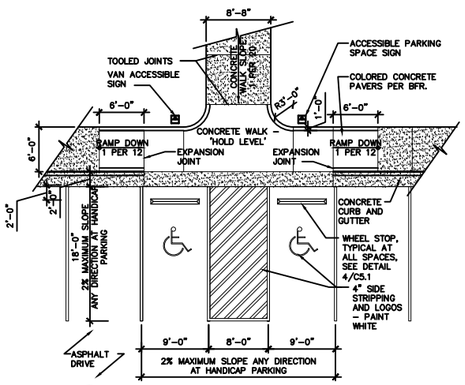

5 ADA MARKINGS
SCALE: NTS

Texas Department of Transportation
125 E. 11th Street
Austin, Texas 78701-2483
(512) 416-3048

Copyright © 2005 Texas Department of Transportation

THIS DOCUMENT IS RELEASED FOR THE PURPOSE OF INFORMATION ONLY NOT FOR REGULATORY APPROVAL, PERMITTING, OR CONSTRUCTION.

WACO AREA ENGINEER AND MAINTENANCE FACILITY
WACO, MCLENNAN COUNTY
WACO DISTRICT

Revisions

Drawn by: NJP

Project No.
CBC4704-00672
Date
03.2007
Sheet No.
C1.0

1 of 10 sheets

CIVIL NOTES

CADFILE: T:\MNTFM\D02FTWCBC4704-00-837702-77-4700408374\Acad\prototypical pdfs\waco\Acad\CivilC1-0.dwg Plotted: Fri, Aug. 07, 2009 @ 1:28 PM By: EEILERT

⚠ CONTROL POINTS

POINT #	NORTHING	EASTING	ELEVATION	DESCRIPTION
313	10514639.81	3280304.43	596.09	CP 5/8 IR W/CAP
322	10514348.86	3281117.04	592.80	CP 5/8 IR W/CAP
323	10514235.09	3280578.83	604.96	CP 5/8 IR W/CAP

NOTE:
CONTRACTOR SHALL ESTABLISH BENCHMARK LOCATION AND ELEVATION AT EXISTING TxDOT ROW MARKER APPROXIMATELY 150 FEET NE OF EXISTING CONCRETE DRIVE

FENCE CORNER POSTS

POINT #	NORTHING	EASTING
67	10514603.50	3280508.33
68	10514982.66	3280659.46
69	10514999.46	3280691.72
70	10515086.11	3281113.73
71	10515070.10	3281311.62
72	10515011.99	3281447.34
73	10514021.27	3281029.91
74	10514280.58	3280378.81

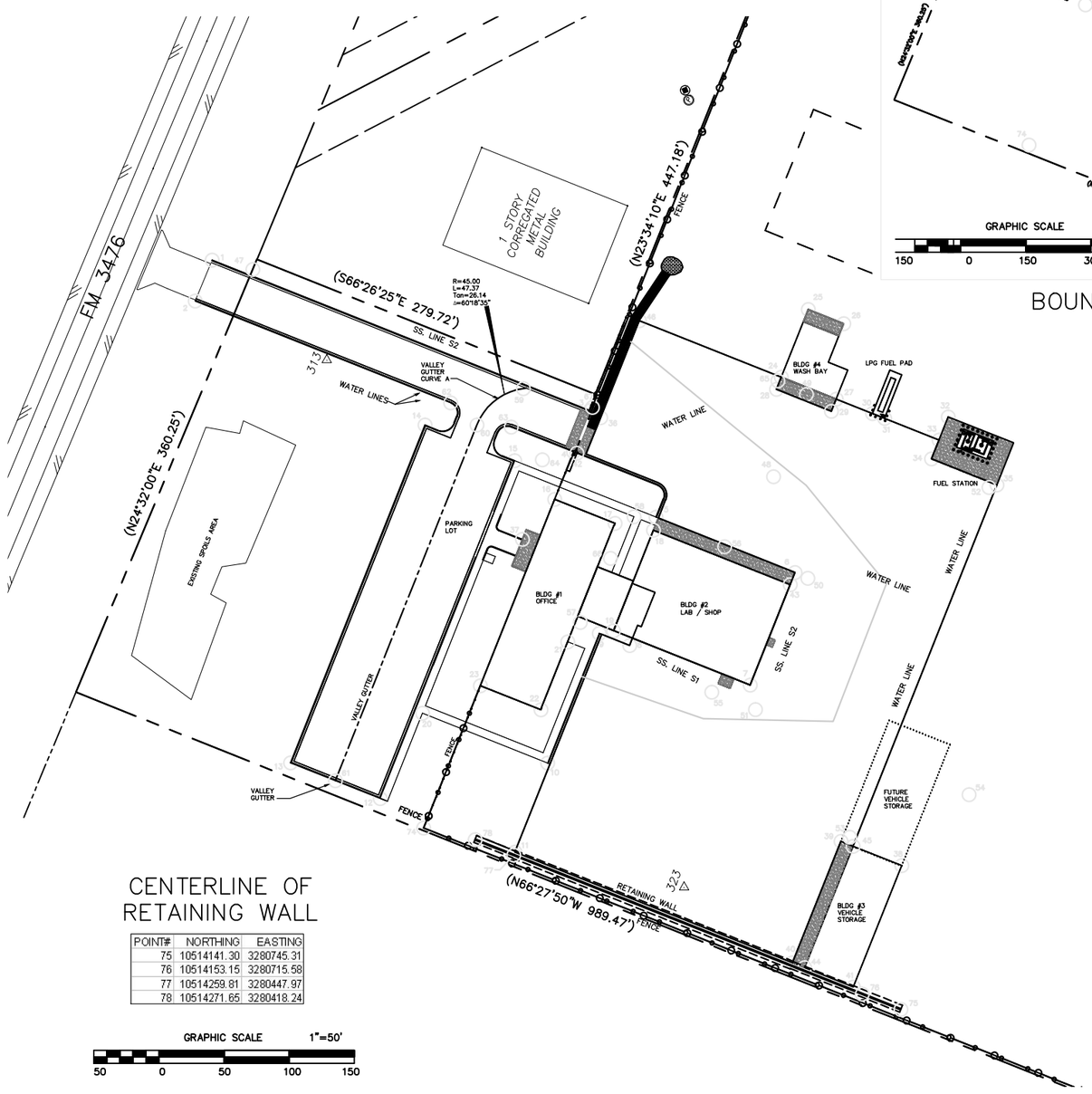

CENTERLINE OF RETAINING WALL

POINT#	NORTHING	EASTING
75	10514141.30	3280745.31
76	10514153.15	3280715.58
77	10514259.81	3280447.97
78	10514271.65	3280418.24

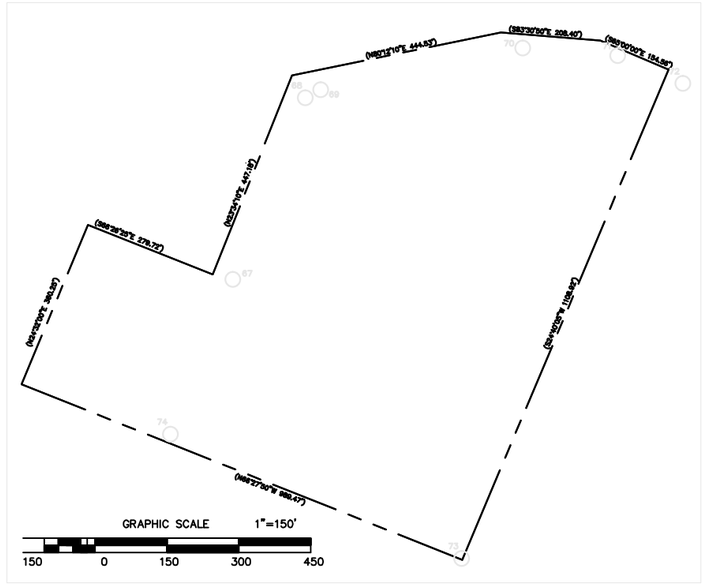

BOUNDARY DESCRIPTION

HORIZONTAL CONTROL PLAN POINT LIST

POINT #	NORTHING	EASTING	ELEVATION	DESCRIPTION
1	10514716.50	3280216.37	598.37	Back of curb
2	10514685.12	3280203.26	598.98	Back of curb
3	10514600.98	3280506.42	594.27	Back of curb
4	10514569.40	3280493.82	594.27	Back of curb
5	10514519.26	3280557.15	598.98	Back of curb
6	10514476.71	3280663.98	598.66	Corner of concrete apron
7	10514390.31	3280629.57	599.00	Corner of building #2
8	10514420.75	3280536.93	598.51	Corner of sidewalk
9	10514430.03	3280513.61	598.78	Back of curb/corner of sidewalk
10	10514330.51	3280473.97	603.05	Back of curb/corner of sidewalk
11	10514262.07	3280448.87	604.21	Pavement corner
12	10514303.29	3280345.36	600.88	Back of curb
13	10514330.67	3280276.61	600.88	Back of curb
14	10514589.88	3280379.83	595.96	Back of curb
15	10514562.49	3280448.59	595.96	Back of curb
16	10514532.90	3280479.30	599.00	Corner of building #1
17	10514514.40	3280525.76	599.00	Corner of building #1
18	10514509.23	3280555.30	599.00	Corner of building #2
19	10514431.89	3280524.50	598.74	Corner of building #2
20	10514368.77	3280377.90	598.85	Corner of sidewalk
21	10514423.56	3280489.31	599.00	Corner of sidewalk
22	10514371.33	3280468.78	599.00	Corner of building #1
23	10514389.83	3280422.33	599.00	Corner of building #1
24	10514626.59	3280653.41	595.10	Wash bay corner
25	10514678.61	3280674.13	595.10	Corner of concrete apron
26	10514667.76	3280701.38	595.10	Corner of concrete apron
27	10514609.81	3280695.52	595.10	Wash bay corner
28	10514617.30	3280649.71	594.62	Corner of concrete apron
29	10514600.52	3280691.82	595.42	Corner of concrete apron
30	10514598.71	3280723.40	595.90	Corner of fuel pad
31	10514595.01	3280732.69	595.90	Corner of fuel pad
32	10514596.17	3280781.58	596.00	Corner of fuel station
33	10514578.36	3280774.49	596.15	Corner of HMAC pavement
34	10514563.89	3280768.73	596.00	Corner of fuel station
35	10514543.91	3280818.89	596.00	Corner of fuel station
36	10514595.58	3280514.59	593.67	Corner of concrete apron
37	10514502.13	3280454.68	598.21	Corner of sidewalk
38	10514251.70	3280745.84	598.97	Corner of buildings #3
39	10514270.29	3280699.16	598.63	Corner of concrete apron
40	10514177.16	3280662.07	598.63	Corner of concrete apron
41	10514158.57	3280708.75	598.97	Corner of building #3
42	10514568.35	3280496.47	594.27	Back of curb
43	10514467.42	3280660.28	599.00	Corner of building #2
44	10514173.46	3280671.36	598.97	Corner of building #3
45	10514266.59	3280708.45	598.97	Corner of building #3
46	10514670.06	3280544.25	592.07	Corner of HMAC pavement
47	10514709.44	3280247.60	596.33	SSWR manhole line S2 Sta. 7+21.01-rim
48	10514550.22	3280647.39	596.21	SSWR manhole line S2 Sta. 2+90.71-rim
49	10514613.56	3280672.62	594.73	Double clean-out
50	10514472.36	3280673.66	598.31	SSWR manhole line S2 Sta. 2+08.54-rim
51	10514371.52	3280633.50	599.30	SSWR manhole line S1 Sta. 2+53.70 = SSWR manhole line S2 Sta. 1+00.00
52	10514542.04	3280812.77		Water
53	10514273.55	3280705.84		Water
54	10514306.17	3280797.58		Connect SSWR line S1 Sta.0+77.09-connect OSSF
55	10514384.89	3280599.93	598.57	SSWR manhole line S1 Sta. 2+89.84-lateral
56	10514496.51	3280609.85	598.66	Concrete apron
57	10514438.47	3280499.04		Double clean-out SSWR line S1 Sta. 4+04.08
58	10514519.53	3280540.24	598.45	Corner of sidewalk
59	10514617.93	3280455.28	593.87	Valley gutter P.C.
60	10514590.04	3280419.72	595.45	Valley gutter P.T.
61	10514316.98	3280310.98	600.38	End transition of valley gutter
62	10514606.95	3280399.54	595.28	Back of curb CR.
63	10514588.44	3280446.01	594.78	Back of curb CR.
64	10514563.32	3280469.83		Water line continue on irrigation
65	10514623.81	3280650.77		Water
66	10514487.66	3280522.17		Water line continue on plumbing

NOTES:
1. ALL BACK OF CURB ELEVATIONS ARE TOP OF 6" CURB.
2. ALL BUILDING CORNER ELEVATIONS ARE FINISHED FLOOR.
3. BENCHMARK: TxDOT AERIAL PANEL HV3-83 – PK NAIL IN ASPHALT APPROX. 950 FEET NORTH OF THE CENTER OF FM 2063, 5 FEET WEST OF THE EAST RIDGE PAVEMENT (SHOULDER) ON THE EAST SIDE OF THE NORTH BOUND TRAFFIC LANE OF INTERSTATE HIGHWAY NO. 35. ELV = 585.77'
3. FOR CONSTRUCTION LAYOUT REQUIREMENTS SEE DIVISION 1 SPECIFICATIONS, SECTION 01300, PARAGRAPH 1.4.

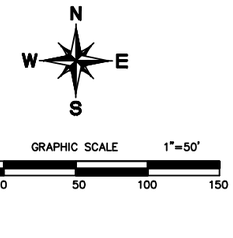

HORIZONTAL CONTROL PLAN

Texas Department of Transportation
125 E. 11th Street
Austin, Texas 78701-2483
(512) 416-3048

Copyright © 2005 Texas Department of Transportation

THIS DOCUMENT IS RELEASED FOR THE PURPOSE OF INFORMATION ONLY NOT FOR REGULATORY APPROVAL, PERMITTING, OR CONSTRUCTION.

WACO AREA ENGINEER
AND MAINTENANCE FACILITY
WACO, MCLENNAN COUNTY
WACO DISTRICT

Revisions

Drawn by: ∞

Project No.
CBC4704-00672
Date
05.21.2007
Sheet No.
C2.0

CADFILE: T:\MNTFM\D02FTW\CBC4704-00-83702-77-470400837\Acad\prototypical pdfs\waco\Acad\Civil\C2-0.dwg Plotted: Fri, Aug. 07, 2009 @ 1:44 PM By: EEILERT

CADFILE: T:\MNT\FMID02FTW\CBC4704-00-83702-77-4704008837\Acad\prototypical pdfs\waco\Acad\Civil\C3-0.dwg Plotted: Fri, Aug. 07, 2009 @ 1:42 PM By: EEILERT

GRAPHIC SCALE 1"=500'

500 0 500 1000 1500

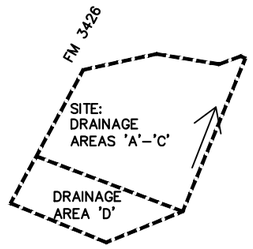

OFFSITE DRAINAGE AREA MAP

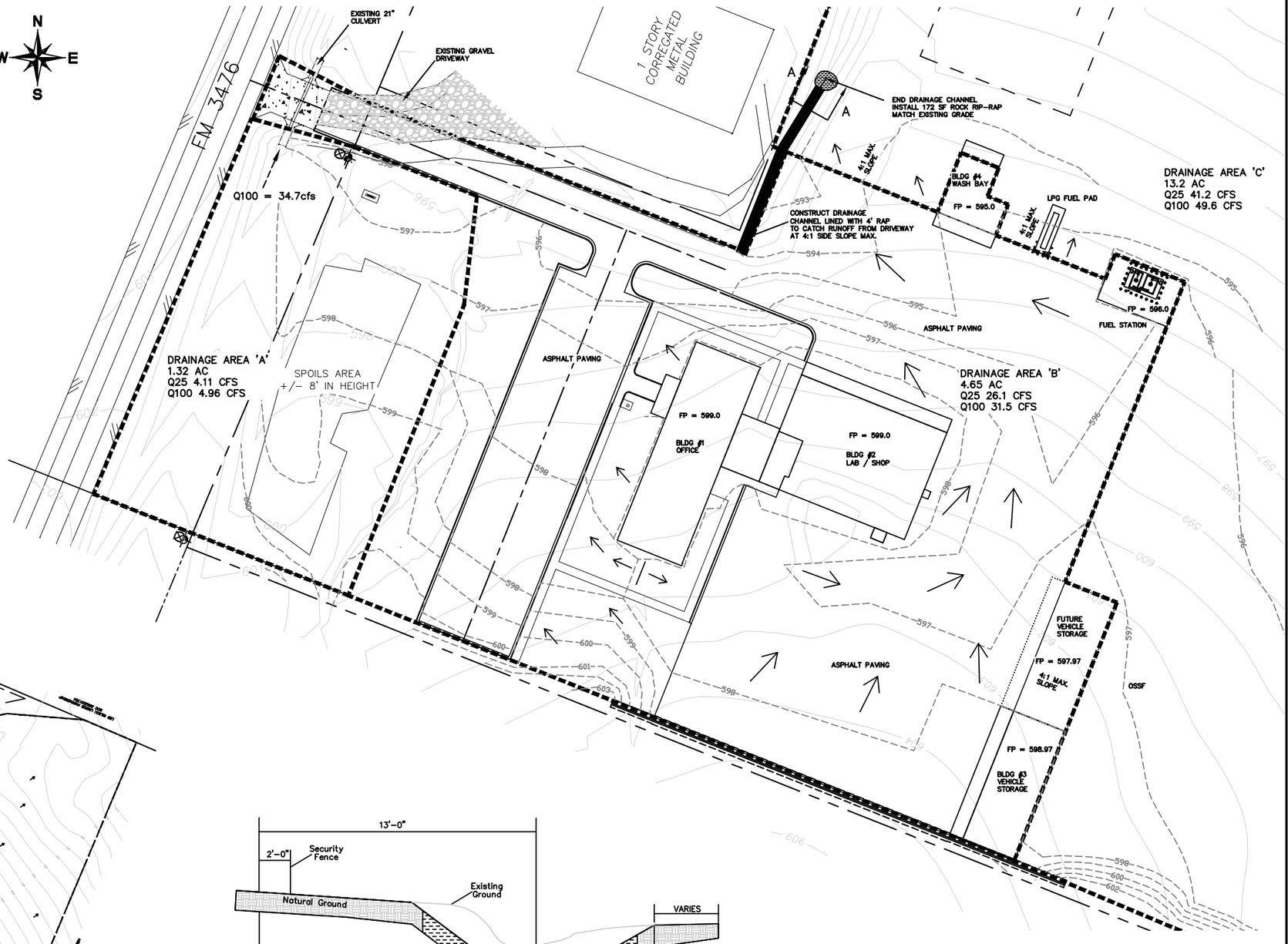

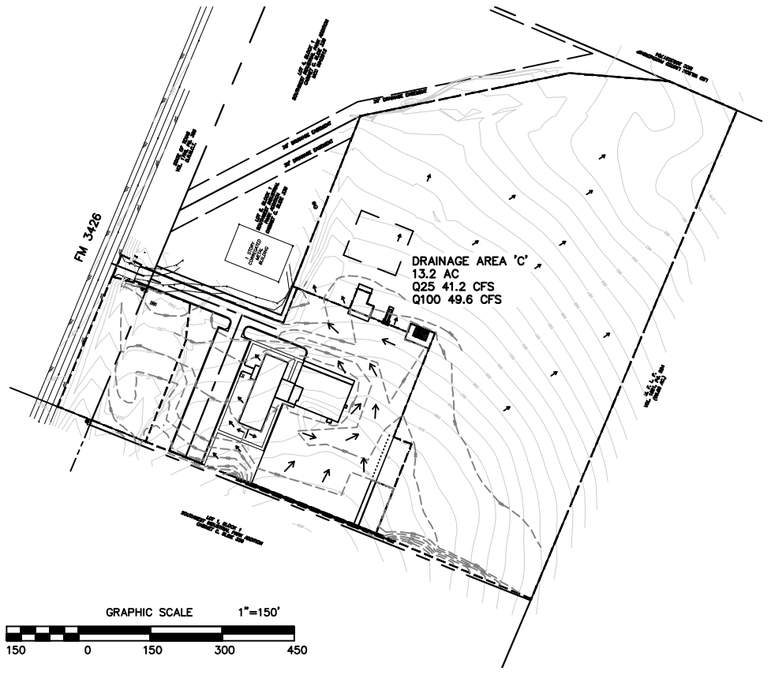

GRAPHIC SCALE 1"=150'

150 0 150 300 450

OVERALL SITE DRAINAGE AREA MAP

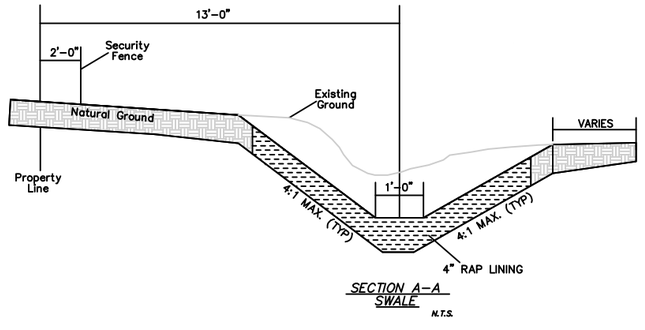

SECTION A–A
SWALE
N.T.S.

GRAPHIC SCALE 1"=40'

40 0 40 80 120

LEGEND

- EXISTING CONTOUR
- PROPOSED CONTOUR
- FLOW DIRECTION
- DRAINAGE AREA BOUNDARY

DRAINAGE CALCULATIONS

Drainage Area	Area	I25	I100	Runoff Coefficient "C"	Q25	Q100	Land Usage
	Acres	in / hr	in / hr		cfs	cfs	
A	1.32	6.23	7.52	0.50	4.11	4.96	Open Lot
B	4.65	6.23	7.52	0.90	26.07	31.47	Parking Lot & Building
C	13.2	6.23	7.52	0.50	41.12	49.63	Open Lot
D	7.92	6.23	7.52	0.50	24.67	29.78	Offsite Drainage
To = 15 minutes							

SITE GRADING & DRAINAGE PLAN

Texas Department of Transportation
125 E. 11th Street
Austin, Texas 78701-2483
(512) 416-3048

Copyright © 2005 Texas Department of Transportation

THIS DOCUMENT IS RELEASED FOR THE PURPOSE OF INFORMATION ONLY NOT FOR REGULATORY APPROVAL, PERMITTING, OR CONSTRUCTION.

WACO AREA ENGINEER
AND MAINTENANCE FACILITY
WACO, MCLENNAN COUNTY
WACO DISTRICT

Revisions

Drawn by: NJP

Project No.
CBC4704-00672
Date
03.2007
Sheet No.
C3.0

LEGEND	
X 500.00	PROPOSED ELEVATION
TC	TOP OF CURB
EA	EDGE OF ASPHALT
FG	FINISHED GRADE
TW	TOP OF WALL
FL	FLOWLINE OF CHANNEL

GRAPHIC SCALE 1"=40'

40 0 40 80 120

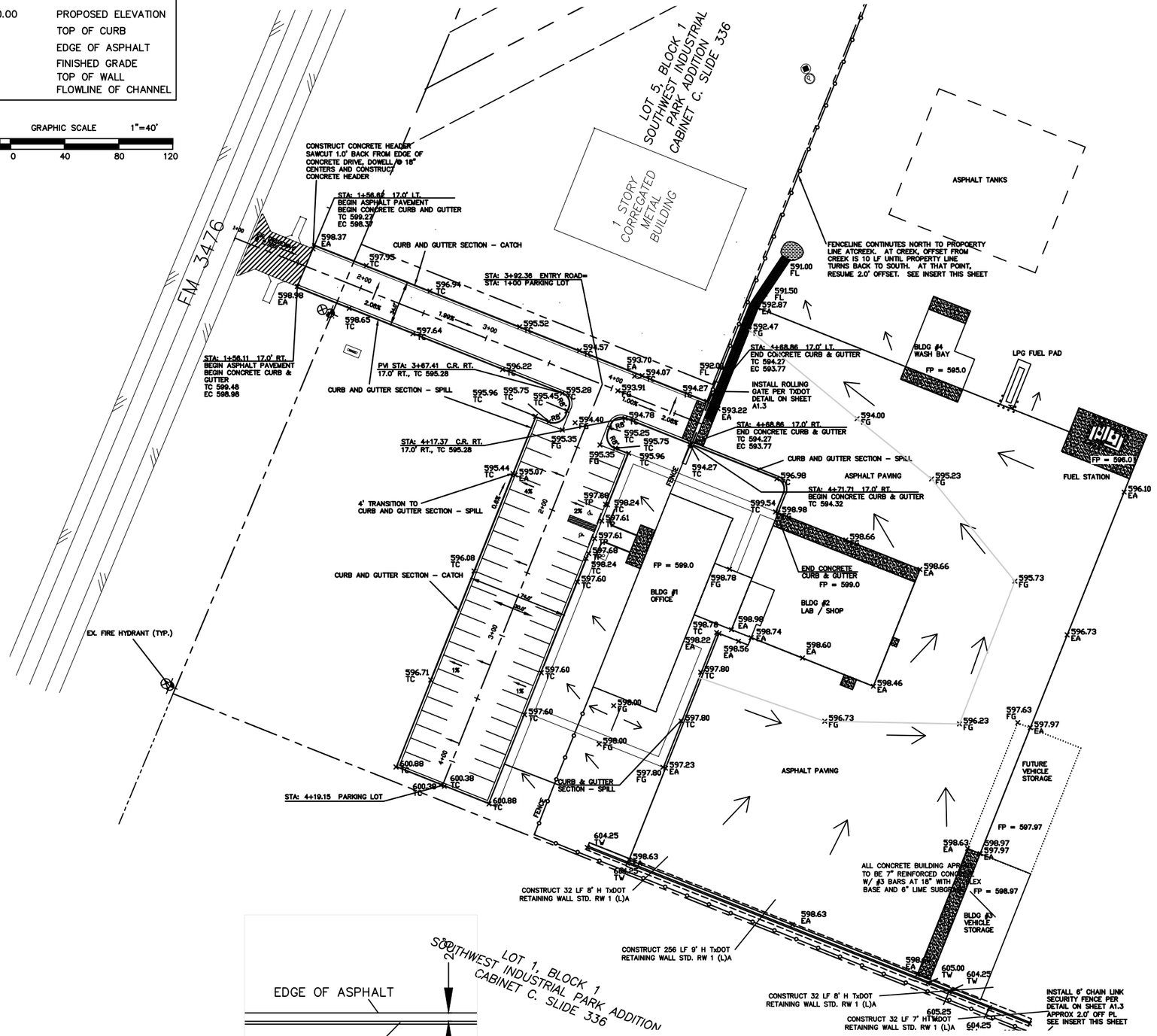

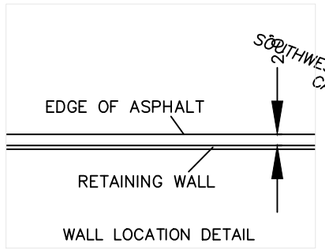

WALL LOCATION DETAIL

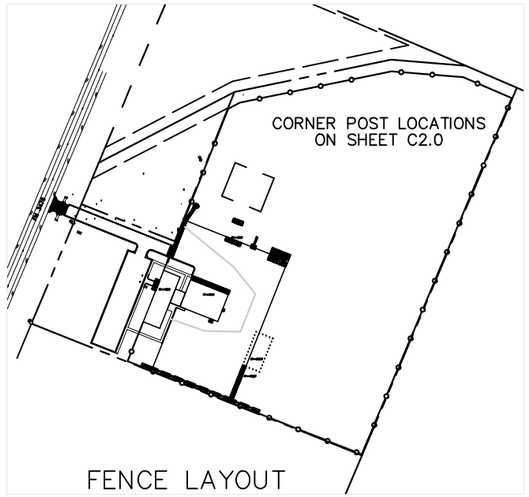

FENCE LAYOUT

GRAPHIC SCALE 1"=200'

200 0 200 400 600

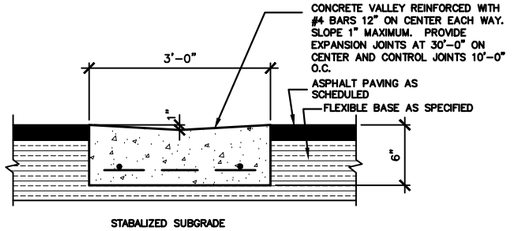

1 CONCRETE VALLEY GUTTER
SCALE: NTS

ADDITIONAL PAVING DETAILS ON SHEET C1.0

SITE PAVING PLAN

Texas Department of Transportation
125 E. 11th Street
Austin, Texas 78701-2483
(512) 416-3048

Copyright © 2005 Texas Department of Transportation

THIS DOCUMENT IS RELEASED FOR THE PURPOSE OF INFORMATION ONLY NOT FOR REGULATORY APPROVAL, PERMITTING, OR CONSTRUCTION.

WACO AREA ENGINEER AND MAINTENANCE FACILITY
WACO, MCLENNAN COUNTY
WACO DISTRICT

Revisions

Drawn by: NJP

Project No. CBC4704-00672
Date 03.2007
Sheet No. C4.0

4 of 10 sheets

CADFILE: T:\MNTFM\D02FT\WCBC4704-00-837\02-77-4704008377\Acad\prototype\pcsd pdfs\waco\Acad\Civil\C4-0.dwg Plotted: Fri, Aug. 07, 2009 @ 1:46 PM By: EEILERT

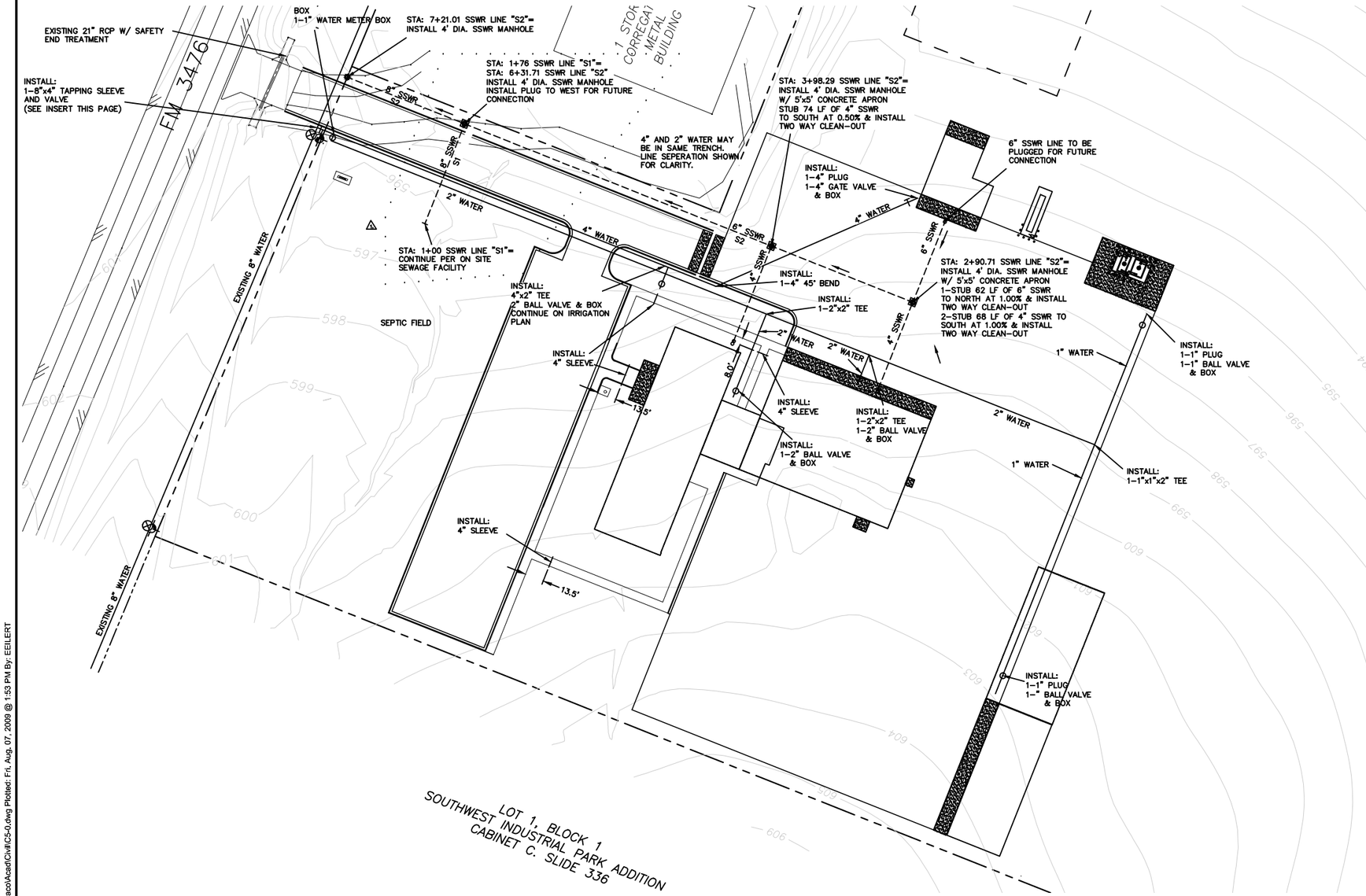

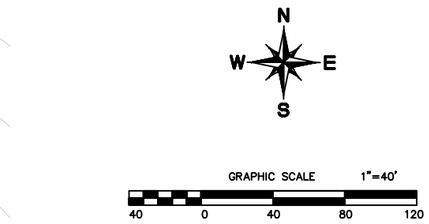

LEGEND

- PROP. WATER
- PROP. SSWR
- PROP. BALL VALVE
- PROP. GATE VALVE

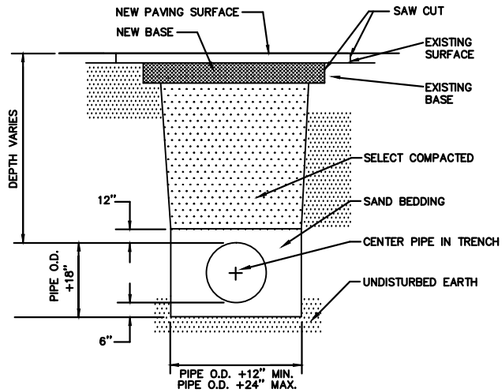

ELEVATION

NOTES:

1. THE EXISTING PAVING SURFACE SHALL BE SAW CUT IN A STRAIGHT LINE, A MINIMUM OF 12" WIDER THAN THE UNDISTURBED SIDES OF THE TRENCH, SYMMETRICAL ABOUT THE CENTERLINE OF THE EXCAVATION.
2. ANY CONCRETE PAVING SHALL BE SAW CUT 6" WIDER THAN UNDISTURBED SIDES OF EXCAVATION.
3. IF EXCAVATION AREA IS OPEN FOR TEMPORARY PUBLIC USE THE SURFACE SHALL BE MAINTAINED LEVEL WITH ADJACENT RIDING SURFACE WITH COLD MIX OR FLEXIBLE BASE MATERIAL.
4. ROAD BASE AND SURFACE MATERIALS SHALL BE REPLACED IN KIND OF EQUAL THICKNESS WITH MINIMUM BASE THICKNESS OF 8".

3 PIPE BEDDING
SCALE:NTS

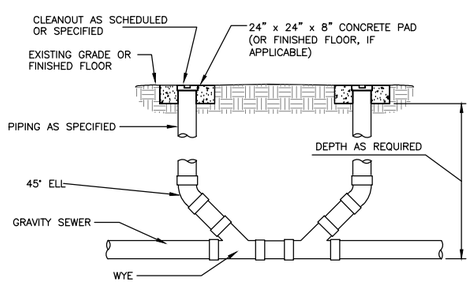

1 TWO WAY CLEAN OUT
SCALE:NTS

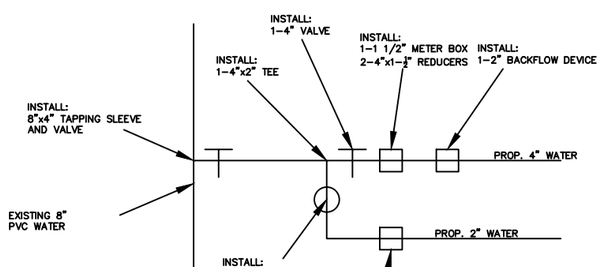

2 WATER CONNECTION
SCALE:NTS

NOTES:

1. New 4" and 2" water line may be installed in same trench with minimum 6" separation.
2. Edge of water line trench nom. 3' off back of curb along driveway.
3. 4" and 2" water line separation shown for clarity.
4. All 4" PVC sleeves shall be 2' below finished grade and extend 1' beyond pavement.
5. Meters provided by city.
6. Sanitary sewer flow line data on profile sheet.
7. Contractor shall coordinate with City of Waco Water and Wastewater Department prior to making tap.
8. Contractor shall use appropriate fittings or taps when transitioning from 4" C-900 to 2" Sch. 80.

WATER & WASTEWATER PLAN

Texas Department of Transportation
125 E. 11th Street
Austin, Texas 78701-2483
(512) 416-3048
Copyright © 2005 Texas Department of Transportation

THIS DOCUMENT IS RELEASED FOR THE PURPOSE OF INFORMATION ONLY NOT FOR REGULATORY APPROVAL, PERMITTING, OR CONSTRUCTION.

WACO AREA ENGINEER AND MAINTENANCE FACILITY
WACO, MCLENNAN COUNTY
WACO DISTRICT

Revisions
1 OSSF MOVED TO FRONT

Drawn by: NJP

Project No.
CBC4704-00672
Date
03.2007
Sheet No.
C5.0

5 of 10 sheets

CADFILE: T:\MNT\FMID02FTW\CBC4704-00-83702-77-4704000837\Acad\prototypical pdfs\waco\Acad\Civil\C5-0.dwg Plotted: Fri, Aug. 07, 2009 @ 1:53 PM By: EEILERT

CADFILE: T:\MNTFM\D02FTW\CBC4704-00-837\02-77-470400837\Acad\prototypical pdfs\waco\Acad\Civil\C6-0.dwg Plotted: Fri, Aug. 07, 2009 @ 1:55 PM By: EEILERT

WASTEWATER PROFILES

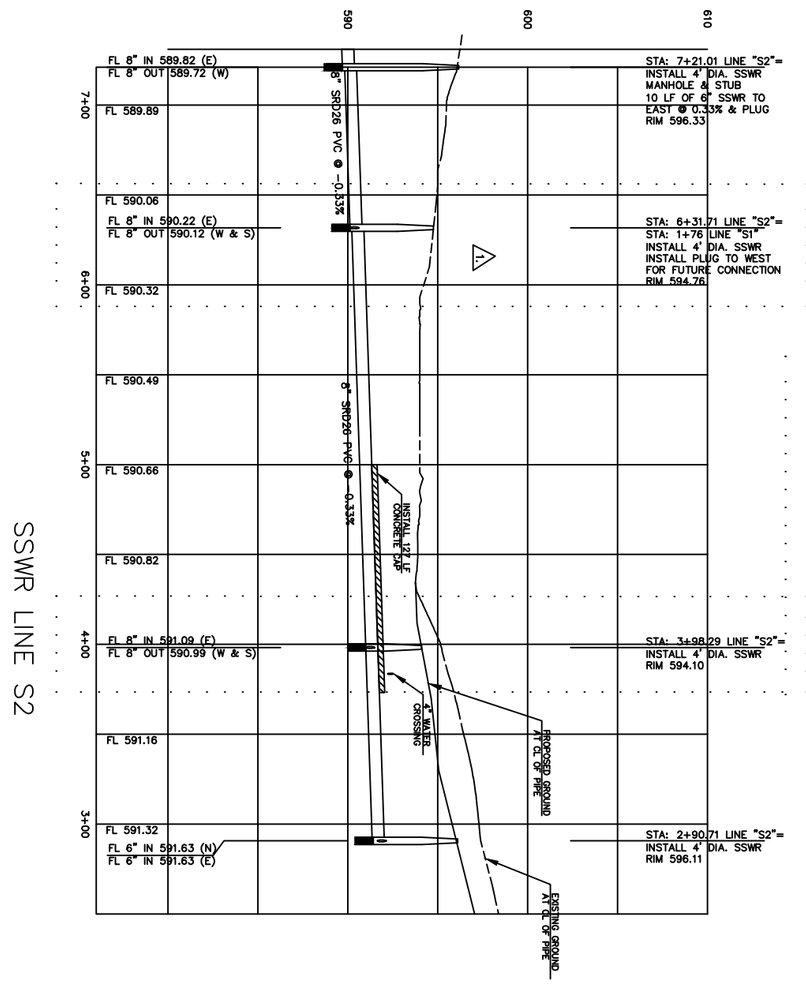

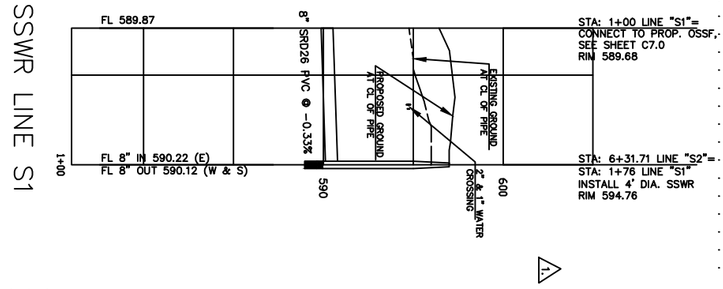

HORIZ. SCALE = 1":40'
VERT. SCALE = 1":4'

Revisions	1 S1 REVISED PER SHEET C5
Drawn by:	NJP
Project No.	CBC4704-00672
Date	03.2007
Sheet No.	C6.0
6 of 10 sheets	

WACO AREA ENGINEER AND MAINTENANCE FACILITY

WACO, MCLENNAN COUNTY
WACO DISTRICT

THIS DOCUMENT IS RELEASED FOR THE PURPOSE OF
INFORMATION ONLY
NOT FOR REGULATORY
APPROVAL, PERMITTING,
OR CONSTRUCTION.

Texas Department of Transportation
125 E. 11th Street
Austin, Texas 78701-2483
(512) 416-3048

Copyright © 2005 Texas Department of Transportation

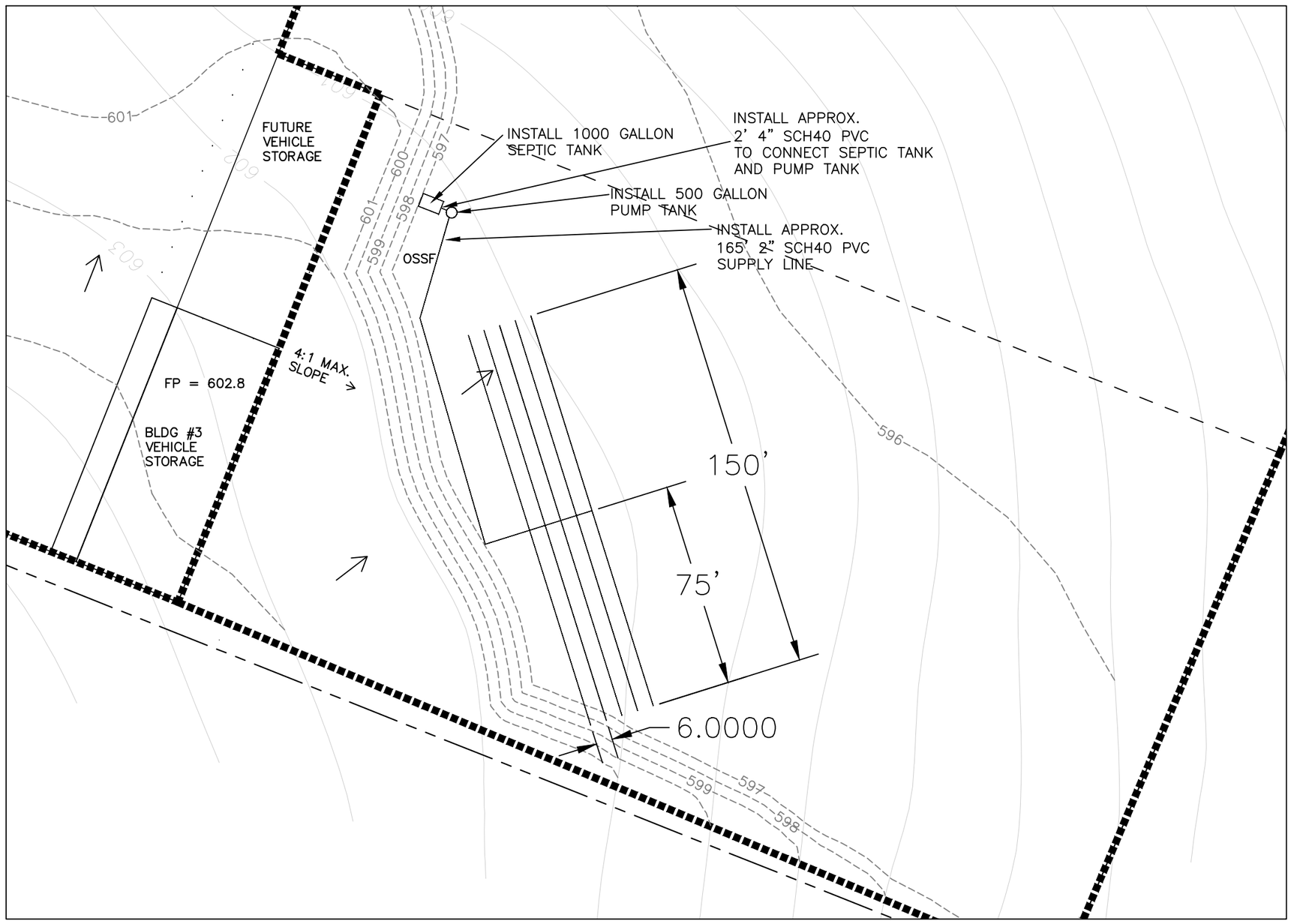

Texas Department of Transportation
125 E. 11th Street
Austin, Texas 78701-2483
(512) 416-3048
Copyright © 2005 Texas Department of Transportation

THIS DOCUMENT IS RELEASED FOR THE PURPOSE OF INFORMATION ONLY NOT FOR REGULATORY APPROVAL, PERMITTING, OR CONSTRUCTION.

WACO AREA ENGINEER AND MAINTENANCE FACILITY

WACO, MCLENNAN COUNTY
WACO DISTRICT

Revisions

Drawn by: JCI

Project No.
CBC4704-00672
Date
03.2007
Sheet No.
C7.0

CADFILE: T:\MNTFM\DD02FT\WCBC4704-00-837\02-77-4704008837\Acad\prototypical pdf's\waco\Acad\Civil\C7-0.dwg Plotted: Fri, Aug. 07, 2009 @ 2:02 PM By: EEILERT

Note: Install laterals holes down.
Note: Geotextile fabric shall be placed between the rock/soil interface.
Note: Zabel orifice shields (Model PDS-OS-1.25) shall be placed over every 5/32" hole.

LINE #	ELEV. TRENCH BOTTOM	ELEV. LATERAL INVERT	HOLES SPACING
1	594.0	594.5	5.0'
2	594.0	594.5	5.0'
3	594.0	594.5	5.0'
4	594.0	594.5	5.0'
5	594.0	594.5	5.0'

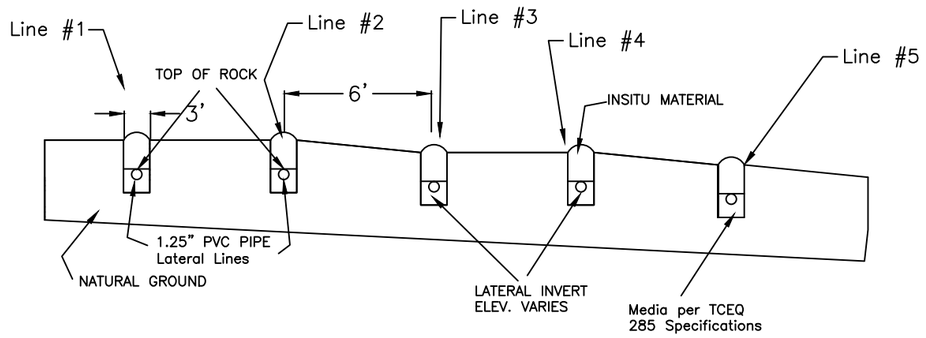

FRONT VIEW

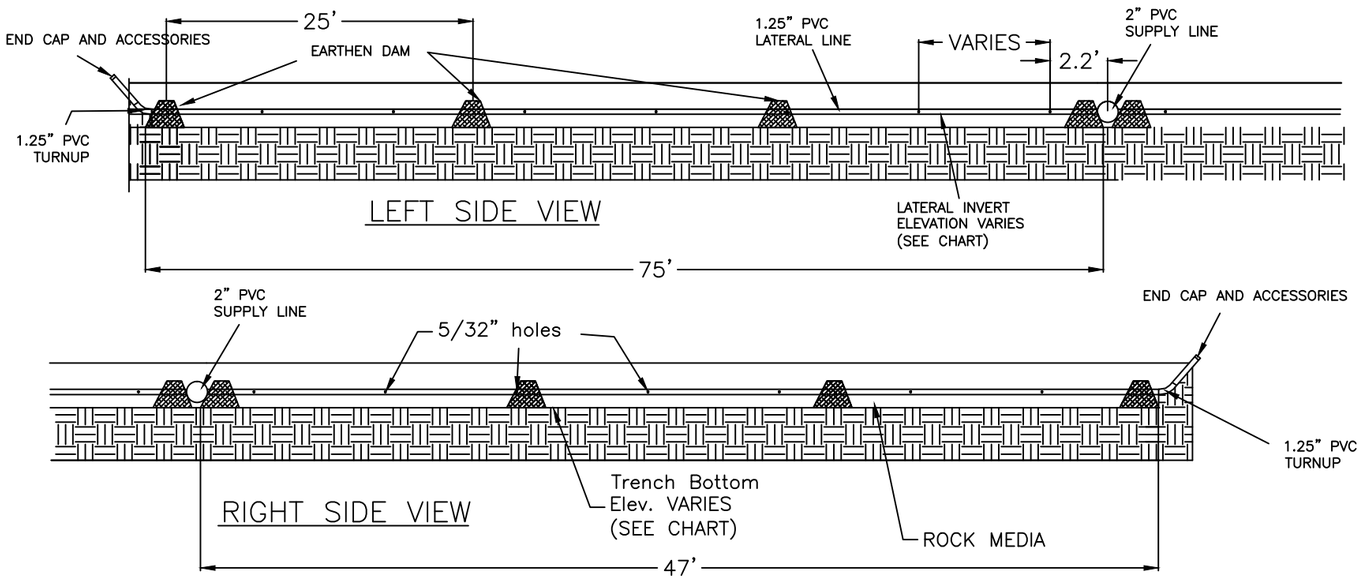

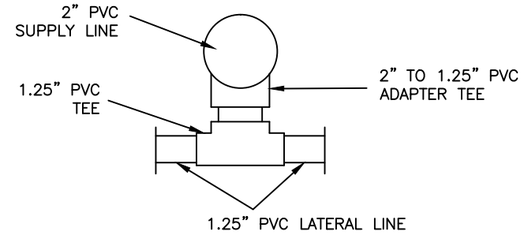

DETAIL AT SUPPLY LINE CONNECTION
(NOT TO SCALE)

Texas Department of Transportation
125 E. 11th Street
Austin, Texas 78701-2483
(512) 416-3048

Copyright © 2005 Texas Department of Transportation

THIS DOCUMENT IS RELEASED FOR THE PURPOSE OF INFORMATION ONLY NOT FOR REGULATORY APPROVAL, PERMITTING, OR CONSTRUCTION.

WACO AREA ENGINEER
AND MAINTENANCE FACILITY
WACO, MCLENNAN COUNTY
WACO DISTRICT

Revisions

Drawn by: JGI

Project No.
CBC4704-00672
Date
03.2007
Sheet No.
C8.0

8 of 10 sheets

CADFILE T:\MNTFMD02FTWCBC4704-00-93702-77-470400837\Acad\prototypical pdfs\waco\Acad\Civil\C8-0.dwg Plotted: Fri, Aug. 07, 2009 @ 2:04 PM By: EEILERT

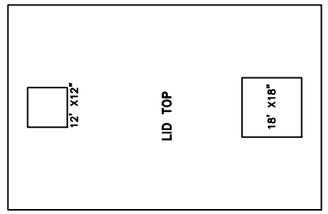

TOP VIEW

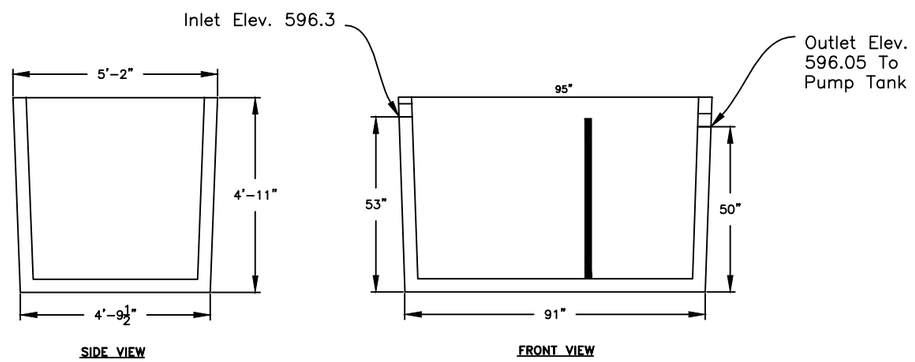

SIDE VIEW FRONT VIEW

APC 1000 Gallon Tank Dimensions (Two Chambers)

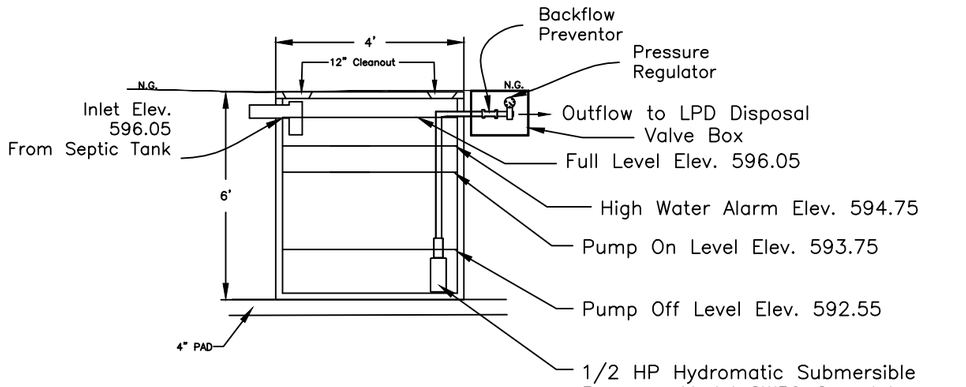

500 Gallon Pump Tank

Texas Department of Transportation
125 E. 11th Street
Austin, Texas 78701-2483
(512) 416-3048
Copyright © 2005 Texas Department of Transportation

THIS DOCUMENT IS RELEASED FOR THE PURPOSE OF:
INFORMATION ONLY
NOT FOR REGULATORY APPROVAL, PERMITTING, OR CONSTRUCTION.

WACO AREA ENGINEER AND MAINTENANCE FACILITY
WACO, MCLENNAN COUNTY
WACO DISTRICT

Revisions

Drawn by: JGI

Project No.
CBC4704-00672
Date
03.2007
Sheet No.
C9.0

9 of 10 sheets

CADFILE: T:\MNTFMD02FTWCBC4704-00-837102-77-47\04008837\Acad\prototypical pdfs\waco\AcadCivilC9-0.dwg Plotted: Fri, Aug. 07, 2009 @ 2:08 PM By: EEILERT

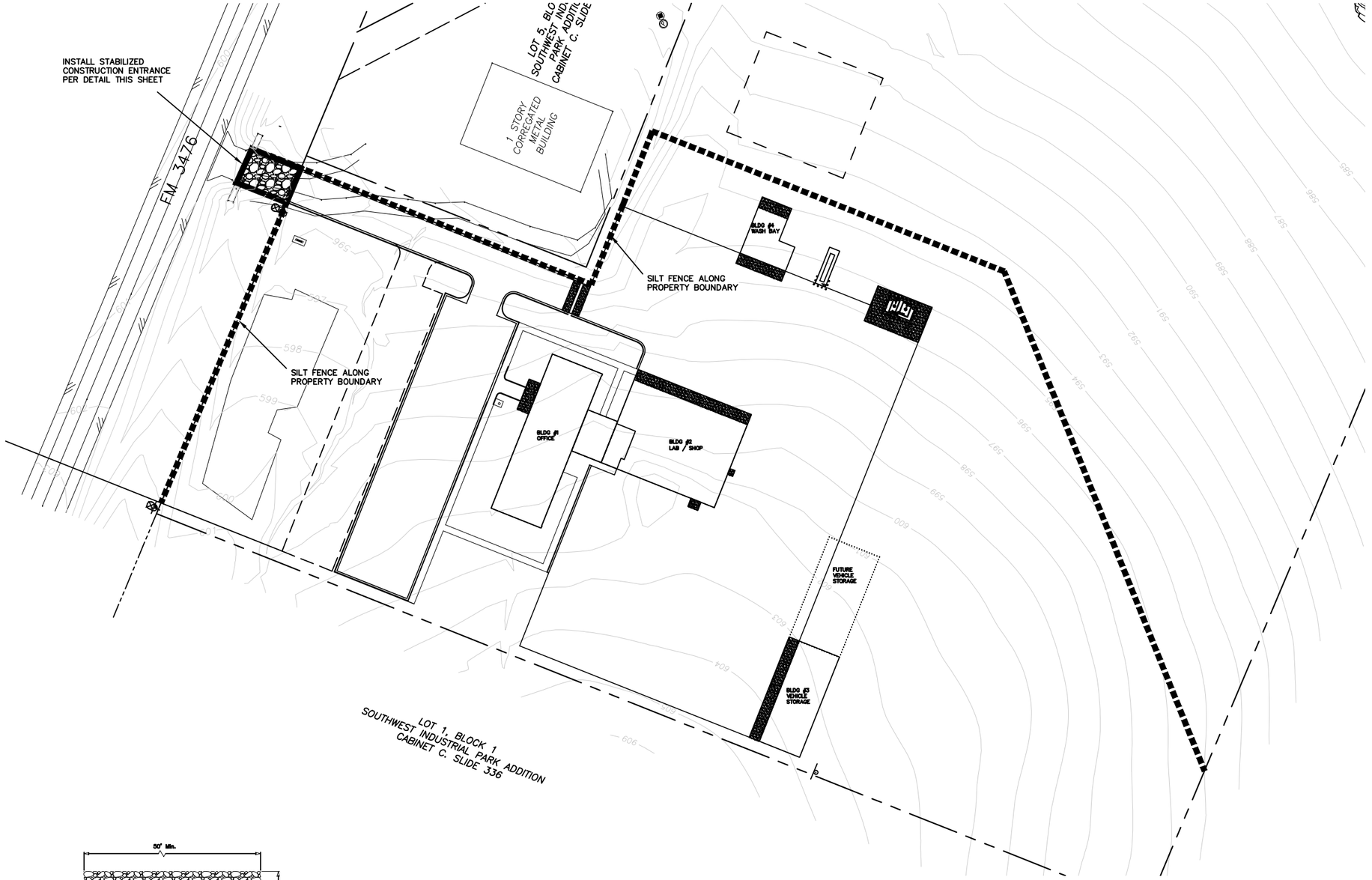

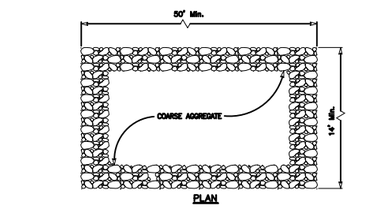

STABILIZED CONSTRUCTION ENTRANCE

GENERAL NOTES

1. THE LENGTH OF THE STABILIZED CONSTRUCTION ENTRANCE SHALL NOT BE LESS THAN 50'.
2. THE COARSE AGGREGATE SHOULD BE OPEN GRADED WITH A SIZE OF 4" TO 8".
3. THE APPROACH TRANSITIONS SHOULD BE NO STEEPER THAN 6:1 AND CONSTRUCTED AS DIRECTED BY THE ENGINEER.
4. THE CONSTRUCTION ENTRANCE FOUNDATION COURSE SHALL BE FLEXIBLE BASE, BITUMINOUS CONCRETE, PORTLAND CEMENT CONCRETE OR OTHER MATERIAL AS APPROVED BY THE ENGINEER.
5. THE GUIDELINES SHOWN HEREON ARE SUGGESTIONS ONLY AND MAY BE MODIFIED BY THE ENGINEER.

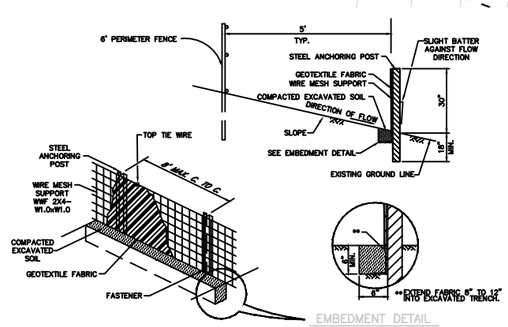

SILT FENCING DETAILS
N.T.S.

STORM WATER POLLUTION PREVENTION PLAN

Texas Department of Transportation
125 E. 11th Street
Austin, Texas 78701-2483
(512) 416-3048

Copyright © 2005 Texas Department of Transportation

THIS DOCUMENT IS RELEASED FOR THE PURPOSE OF INFORMATION ONLY NOT FOR REGULATORY APPROVAL, PERMITTING, OR CONSTRUCTION.

WACO AREA ENGINEER AND MAINTENANCE FACILITY
WACO, MCLENNAN COUNTY
WACO DISTRICT

Revisions

Drawn by: NJP

Project No.
CBC4704-00672
Date
03.2007
Sheet No.
C10.0

11 of 10 sheets

CADFILE: T:\MNTFM\D02FTW\CBC4704-00-837\02-77-4\704008374\Acad\grotoolypical pdfs\waco\Acad\Civil\C10-0.dwg Plotted: Fri, Aug. 07, 2009 @ 2:10 PM By: EEILERT

KEY NOTES:

1. HANDICAP CURB CUT - REFER TO CIVIL DRAWINGS FOR ADDITIONAL NOTES.
2. 4" WIDE STRIPPING AND HANDICAP LOGOS - REFER TO CIVIL DRAWINGS.
3. FLAG POLE - REFER TO DETAIL 9 SHEET A1.2
4. 6' WIDE , 4" THICK REINFORCED CONCRETE SIDEWALK (TYP) REFER TO CIVIL DRAWINGS.
5. REINFORCED CONCRETE APRON - REFER TO STRUCTURAL DRAWINGS. SCORE CONTROL JOINTS AND PROVIDE ½" THICK EXPANSION JOINT AT 20'-0"± MAXIMUM (SEE STRUCTURAL AND CIVIL)
6. CONCRETE CURB AND GUTTER - REFER TO CIVIL DRAWINGS. EXTEND TO CONCRETE WALK
7. FUELING STATION - REFER TO SHEET A2.4.
8. BUILDING IDENTIFICATION SIGN - REFER TO DETAIL 1 SHEET A1.2
9. CONTINUOUS SECURITY FENCE AND GATE, TO BE INSTALLED.
10. TEMPORARY CONSTRUCTION FENCE - PROVIDE FENCE TO MAINTAIN SECURITY OF OWNERS EXISTING ADJACENT SITE.
11. CONCRETE SLAB FOR LPG TANK.
12. LPG TANK, BY OWNER, NOT IN CONTRACT.
13. PARKING SIGNAGE, REFER TO DETAIL 6 SHEET A1.2

DEMOLITION KEY NOTES:

D1 DEMO ANY EXISTING ASHPHALTIC CEMENT MATERIALS WITHIN THE LIMITS OF CONSTRUCTION.

D2 DEMO ANY EXISTING VEGETATION WITHIN THE LIMITS OF CONSTRUCTION, VERIFY WITH OWNER PRIOR TO REMOVAL.

D3 DEMO ANY EXISTING FENCE, STOCKPILES AND DEBRIS WITHIN THE LIMITS OF CONSTRUCTION.

GENERAL NOTES:

1. ALL DIMENSIONS ARE FROM BACK OF CURB, FACE OF MASONRY, PROPERTY LINE OR METAL WALL PANEL
2. ALL SITE IMPROVEMENTS ADJACENT TO PROPERTY LINE SHALL EXTEND TO PROPERTY LINE OR TO SECURITY FENCE - REFER TO TYPICAL FENCE DETAILS SHEET A1.3
3. REFER TO CIVIL DRAWINGS FOR DIMENSION CONTROL PLAN AND DIMENSION CONTROL COORDINATES.
4. REFER TO CIVIL DRAWINGS FOR EROSION CONTROL PLAN.
5. REFER TO CIVIL DRAWINGS FOR GRADING PLAN.
6. REFER TO CIVIL DRAWINGS FOR UTILITY PLAN.
7. CONTRACTOR TO VERIFY BENCHMARKS LOCATION AND ELEVATION W/ ENGINEER PRIOR TO CONSTRUCTION.

SITE PLAN LEGEND:

- ASPHALT PAVING AND BASE AS SCHEDULED FOR BIDDING UNDER THIS CONTRACT.
- LANDSCAPING AND IRRIGATION SYSTEM AS SPECIFIED
- REINFORCED CONCRETE PAVING / WALK - REFER TO DETAILS ON SHEET C5.1

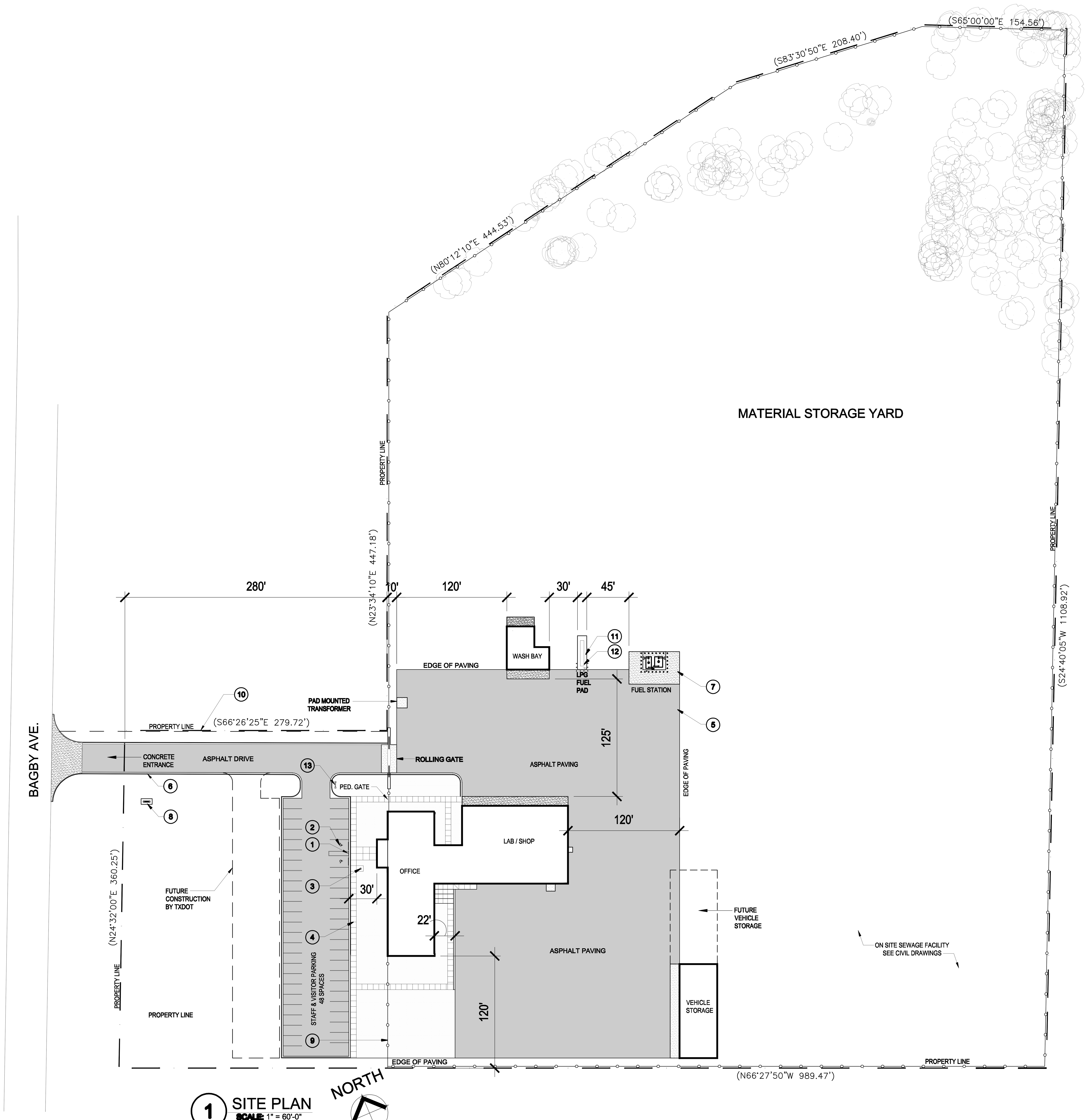

1 SITE PLAN
SCALE: 1" = 60'-0"

Texas Department of Transportation
125 E. 11th Street
Austin, Texas 78701-2483
(512) 416-3000
Copyright © 2005 Texas Department of Transportation

THIS DOCUMENT IS RELEASED FOR THE PURPOSE OF INFORMATION ONLY
NOT FOR REGULATORY APPROVAL, PERMITTING, OR CONSTRUCTION.

WACO AREA ENGINEER AND MAINTENANCE FACILITY

WACO, MCLENNAN COUNTY
WACO DISTRICT

Revisions

Drawn by: KAO/EE
Project No. CBC4704-00672
Date 05.21.2007
Sheet No.

A1.0
of 37 sheets

SITE PLAN

NOTE: THIS DRAWING WAS CREATED FOR PRODUCTION ON 22" x 34" SHEET SIZE. DO NOT SCALE PRINTS.

CADFILE: T:\MNTFM\D02FTWCBC4704-00-837\02-77-470400837\Acad\prototypical pdfs\waco\Acad\Arch\0872_A1_0.dwg Plotted: Fri, Aug. 07, 2009 @ 12:44 PM By: MBAZAN

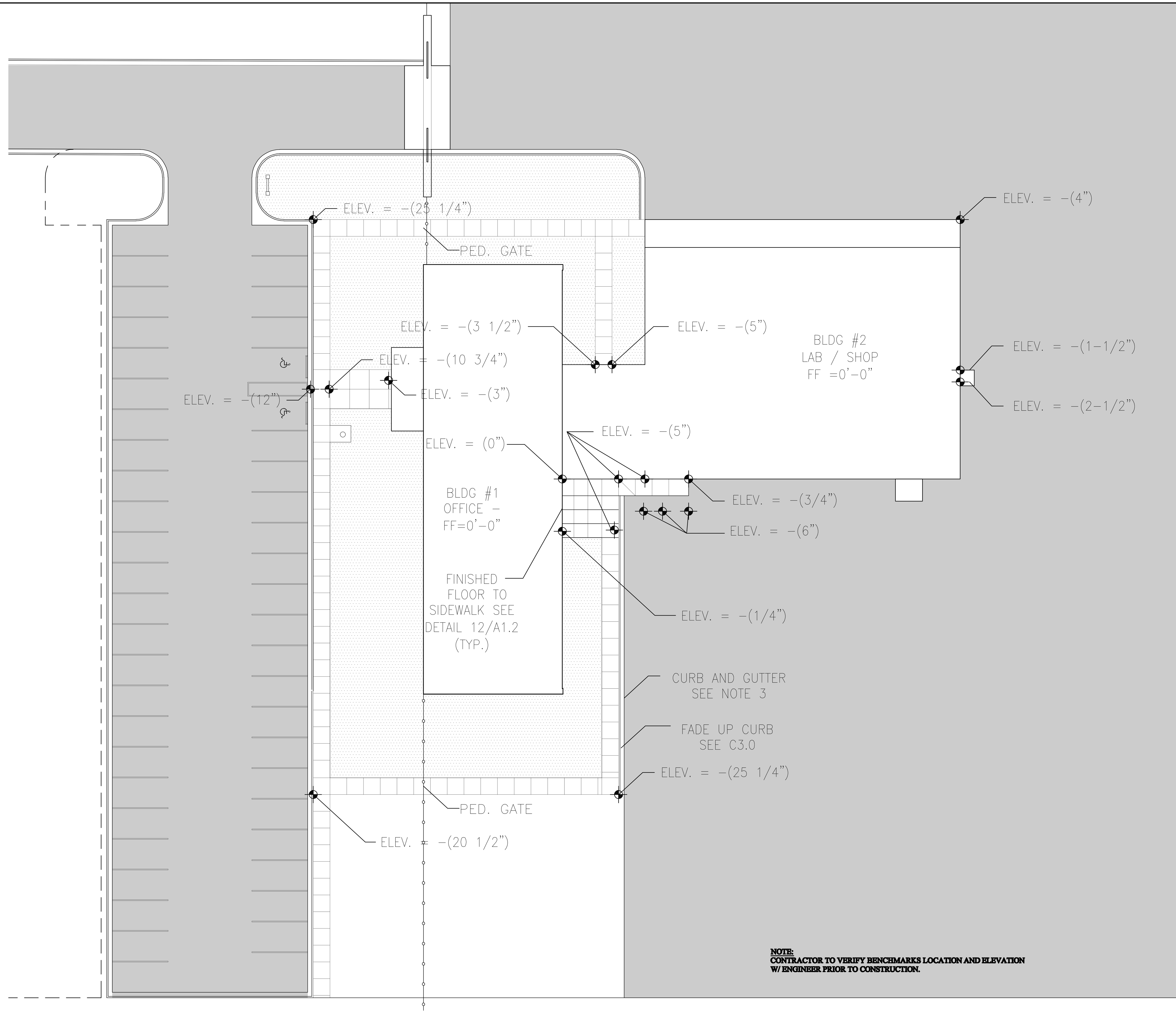

NOTE:
CONTRACTOR TO VERIFY BENCHMARKS LOCATION AND ELEVATION W/ ENGINEER PRIOR TO CONSTRUCTION.

1 SITE SPOT ELEVATIONS PLAN
SCALE: 1" = 20'

NORTH

NOTES
1. REFER TO CIVIL DRAWINGS FOR DIMENSION CONTROL PLAN AND DIMENSION CONTROL COORDINATES.
2. REFER TO CIVIL DRAWINGS FOR EROSION CONTROL PLAN.
3. REFER TO CIVIL DRAWINGS FOR GRADING PLAN.
4. REFER TO CIVIL DRAWINGS FOR UTILITY PLAN.
5. ASSUMED FINISHED FLOOR ELEVATION = 0'-0" UNLESS NOTED OTHERWISE. SEE CIVIL DWGS. FOR ACTUAL ELEVATION

SITE SPOT ELEVATIONS PLAN

NOTE: THIS DRAWING WAS CREATED FOR PRODUCTION ON **22" x 34"** SHEET SIZE. DO NOT SCALE PRINTS.

Texas Department of Transportation
125 E. 11th Street
Austin, Texas 78701-2483
(512) 416-3848

Copyright © 2005 Texas Department of Transportation

THIS DOCUMENT IS RELEASED FOR THE PURPOSE OF
INFORMATION ONLY
NOT FOR REGULATORY
APPROVAL, PERMITTING,
OR CONSTRUCTION.

WACO AREA ENGINEER AND MAINTENANCE FACILITY
WACO, MCLENNAN COUNTY WACO DISTRICT

Revisions
△
△
△
△

Drawn by: KAO/EE
Project No. CBC4704-00672
Date 05.21.2007
Sheet No.
A1.1
of 37 **sheets**

CADFILE: T:\MNTFM\D02FTW\CBC4704-00-837\02-77-47040837\Acad\prototypical pdfs\waco\Acad\Arch\0672_A1_1.dwg Plotted: Fri. Aug. 07, 2009 @ 12:45 PM By: MBAZAN

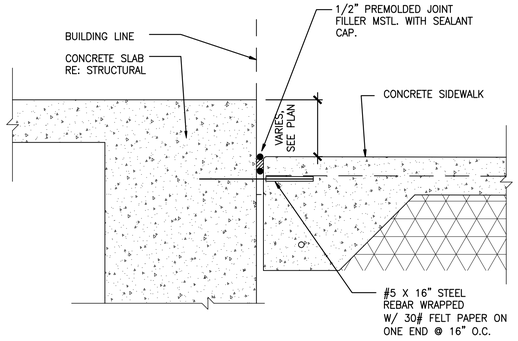

12 SIDEWALK AT BUILDING FOUNDATION
SCALE: N. T. S. (TYPICAL)

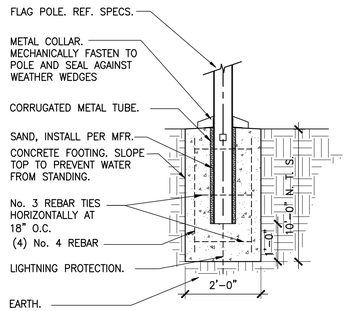

9 FLAG POLE BASE
SCALE: 1/2" = 1'-0"

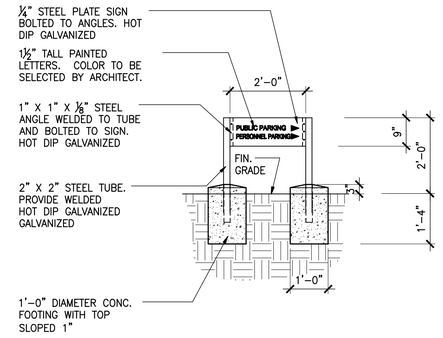

6 ENTRY SIGN ELEVATION
SCALE: 1/2" = 1'-0"

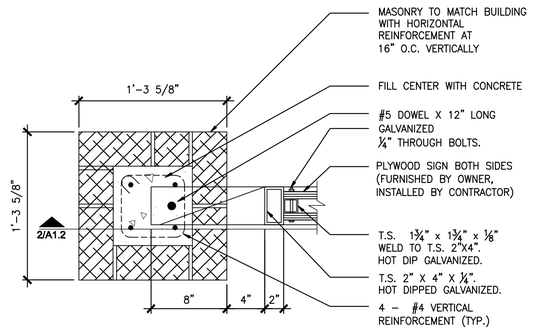

3 TXDOT SIGN PLAN VIEW
SCALE: 1/8" = 1'-0"

11 LIGHT POLE BASE
SCALE: 1/2" = 1'-0"

8 BOLLARD DETAIL
SCALE: 1/2" = 1'-0"

5 TXDOT SIGN SECTION
SCALE: 1/2" = 1'-0"

2 TXDOT SIGN SECTION
SCALE: 1/2" = 1'-0"

10 ACCESSIBLE SIGN
SCALE: 1/2" = 1'-0"

7 BOLLARD DETAIL
SCALE: 1/2" = 1'-0"

4 TXDOT SIGN ELEVATION
SCALE: 1/2" = 1'-0"

1 TXDOT SIGN ELEVATION
SCALE: 1/2" = 1'-0"

SITE DETAILS

THIS DOCUMENT IS RELEASED FOR THE PURPOSE OF
INFORMATION ONLY
NOT FOR REGULATORY
APPROVAL, PERMITTING,
OR CONSTRUCTION.

Texas Department of Transportation
125 E. 11th Street
Austin, Texas 78701-2483
(512) 416-3000
Copyright © 2005 Texas Department of Transportation

WACO AREA ENGINEER AND MAINTENANCE FACILITY
WACO, MCLENNAN COUNTY
WACO DISTRICT

Revisions

Drawn by: JOT
Project No. CBC4704-00672
Date 05.21.2007
Sheet No. A1.2
of 37 **sheets**

CADFILE: T:\MNTFM\2025FY\WCBC4704-00-857\02-77-4704008571\wacfpro\stypical pdf\sheets\Acad\Arch\10672_A1_2.dwg Plotted: Fri, Aug. 07, 2009 @ 12:30 PM By: MBAZAN

NOTE: THIS DRAWING WAS CREATED FOR PRODUCTION ON 22" x 34" SHEET SIZE. DO NOT SCALE PRINTS.

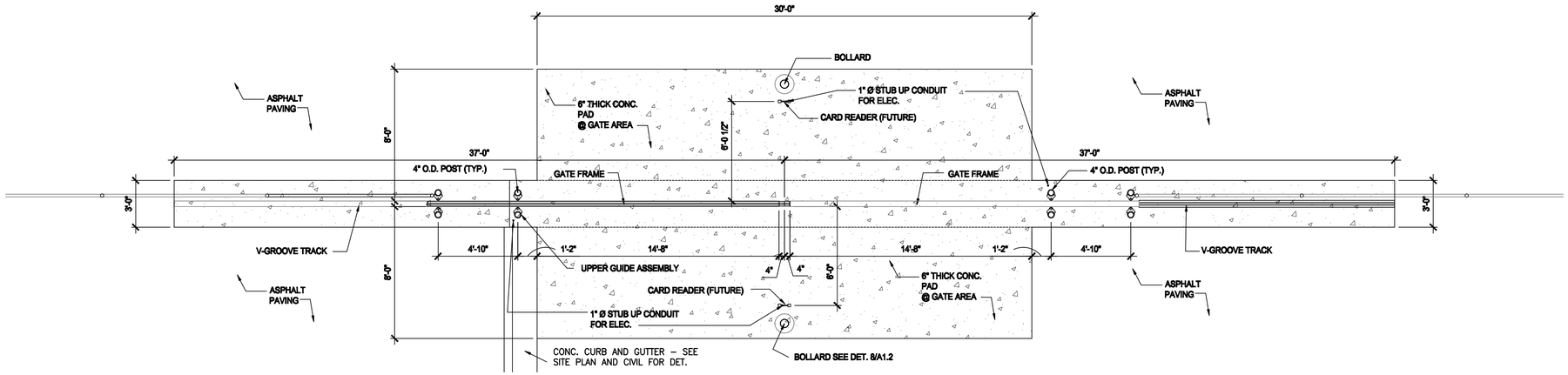

1 PLAN @ SECURITY GATE
SCALE: 1/4" = 1'-0"

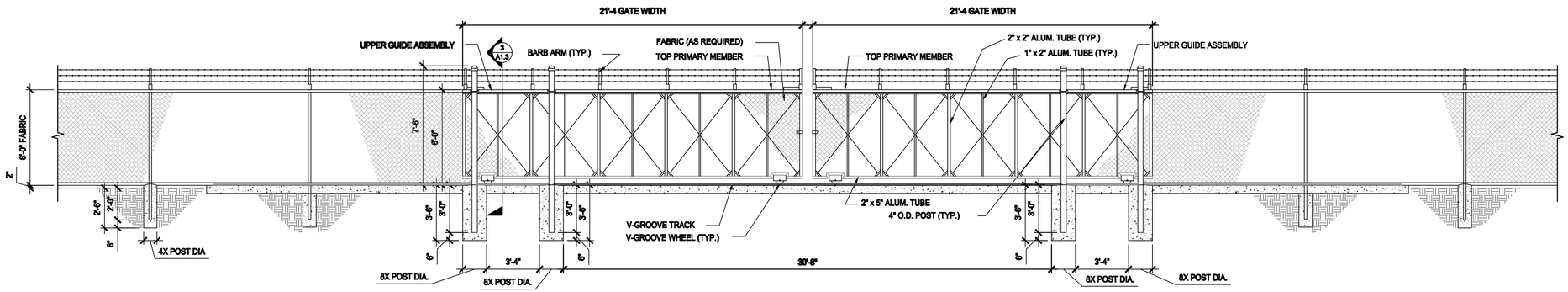

2 STANDARD ROLLING SECURITY GATE
SCALE: 1/4" = 1'-0"

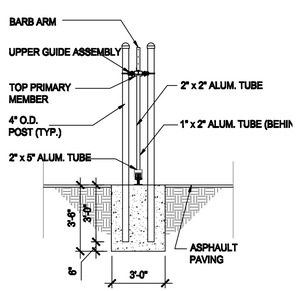

3 GATE SECTION
SCALE: 1/4" = 1'-0"

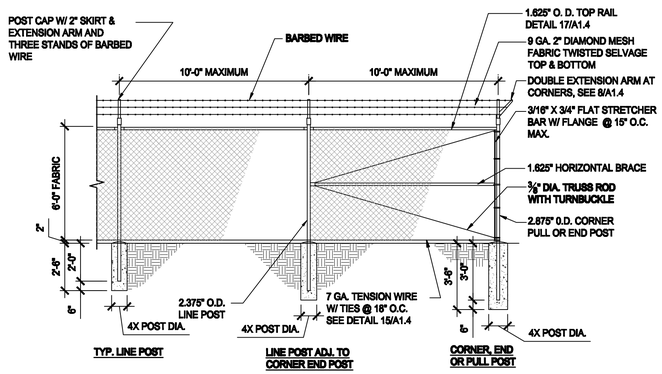

4 SECURITY FENCING WITH BARBED WIRE
SCALE: 1/4" = 1'-0"

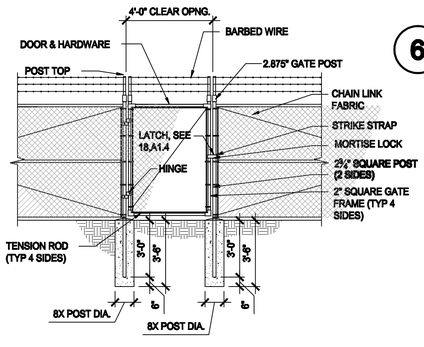

5 PEDESTRIAN GATE
SCALE: 1/4" = 1'-0"

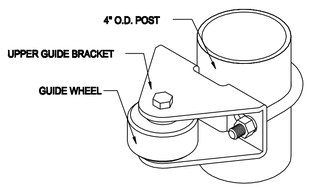

6 UPPER GUIDE ASSEMBLY
SCALE: 1/2" = 1'-0"

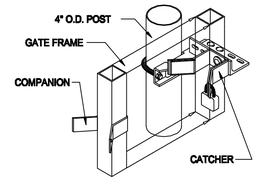

7 CATCH ASSEMBLY
SCALE: 1/2" = 1'-0"

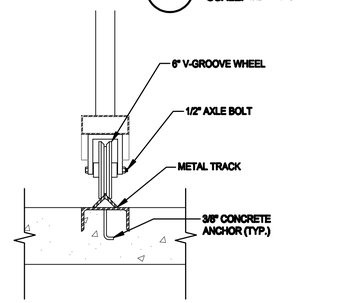

8 V-GROOVE WHEEL ASSEMBLY
SCALE: 1/2" = 1'-0"

GATE & FENCE DETAILS

NOTE: THIS DRAWING WAS CREATED FOR PRODUCTION ON 22" x 34" SHEET SIZE. DO NOT SCALE PRINTS.

CADFILE: T:\NHT\PWD\DFTWC\BC4704-00-83\02-77-4704008377\Acad\prots\plotsl pdf#seed=Acad\Arch\0572_A1_3.dwg Plotted: Fri, Aug. 07, 2009 @ 12:47 PM By: MBAZAN

Texas Department of Transportation
125 E. 11th Street
Austin, Texas 78701-2483
(512) 416-2000

Copyright © 2005 Texas Department of Transportation

THIS DOCUMENT IS RELEASED FOR THE PURPOSE OF
INFORMATION ONLY
NOT FOR REGULATORY
APPROVAL, PERMITTING,
OR CONSTRUCTION.

WACO AREA ENGINEER AND MAINTENANCE FACILITY
WACO, MCLENNAN COUNTY
WACO DISTRICT

Revisions

Drawn by: KAO/EE
Project No. CBC4704-00672
Date 05.21.2007
Sheet No.

A1.3
of 37 sheets

BUILDING CODE:
2006 INTERNATIONAL BUILDING CODE

OCCUPANCY CLASSIFICATION & SEPARATION

CLASS	DESCRIPTION	SEPARATION – SEC. 302.3.2 & TABLE 302.3.2	
B	OFFICE AREAS	B TO S1	3 HOUR
S1	GENERAL MATERIAL STORAGE		
S2	GENERAL MATERIAL STORAGE	B TO S2	2 HOUR

OPENINGS IN THIS FIRE BARRIER ARE REQUIRED TO BE PROTECTED WITH 3 HOUR FIRE ASSEMBLIES. – TABLE 715.3

NOTE: STORAGE AREAS LESS THAN 1000 SQUARE FEET NEED NOT BE SEPARATED. – TABLE 302.3.2

NOTE: STORAGE AREAS LARGER THAN 100 SQUARE FEET ARE REQUIRED TO BE 1 HOUR SEPARATION. – TABLE 302.1.1

PROPERTY DESCRIPTION

NORTH SIDE HAS A PROPERTY LINE. - DISTANCE TO PROPERTY LINE = 200'
EAST SIDE HAS A PROPERTY LINE. - DISTANCE TO PROPERTY LINE = 150'
SOUTH SIDE HAS A PROPERTY LINE. - DISTANCE TO PROPERTY LINE = 200'
WEST SIDE HAS A PROPERTY LINE. - DISTANCE TO PROPERTY LINE = 300'

CONSTRUCTION TYPE: IIB

ALLOWABLE FLOOR AREA:

1. ASSUME A PROPERTY LINE BETWEEN BUILDINGS AND TREAT EACH BUILDING SEPARATELY.
2. DUE TO SEPARATION FRONTAGE, ALLOWABLE AREA MAY BE INCREASED 50%

BUILDING 1 & 2:

OCCUPANCY	BASIC ALLOWABLE AREA (S.F.)	ACTUAL AREA (S.F.)		RATIO OF ACTUAL S.F. TO ALLOWABLE AREA
B	23,000	9,716		0.42
S1	17,500	2,658		0.15
S2	26,000	766		0.02
	20,250	17,140	TOTAL LESS THAN 1	0.59

OCCUPANCY LOAD FACTORS:

DESCRIPTION	OCCUPANTS LOAD	MIN. EXITS	CORRIDOR RATING	DOOR SWING
BUILDING 1 & 2: Section 1014				
B MAIN OFFICE	35	1	N/A	OUT
B MAIN OFFICE	46	1	N/A	OUT
S1 GENERAL STORAGE	13	1	N/A	N/R
S2 SHOP STOR/STOCK RM	3	1	N/A	N/R
S1 EQUIP. STORAGE	14	1	N/A	OUT

EXIT ACCESS TRAVEL DISTANCE:

1. THE MAXIMUM TRAVEL DISTANCE IN GROUP B IS 200 FEET. – TABLE 1015.1
2. THE MAXIMUM TRAVEL DISTANCE IN GROUP S1 IS 200 FEET. – TABLE 1015.1

NOTES:

1 MINIMUM WIDTH OF EXITS' 0.2 INCH / OCCUPANT
2 AREAS WITH 'AC' BEFORE THE NUMBER OF OCCUPANTS IS BEING TREATED AS AN ACCESSORY USE AREA.

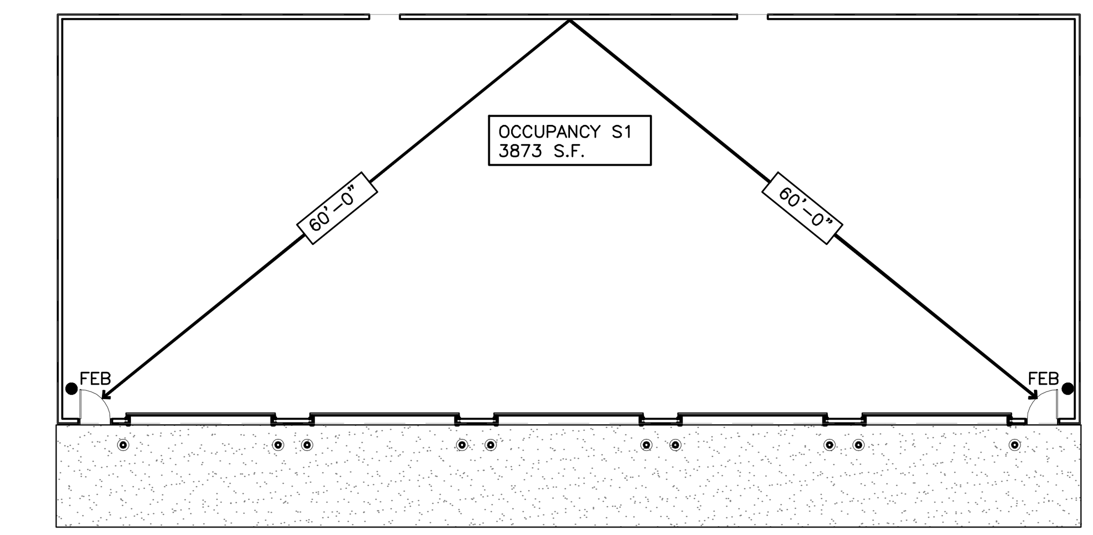

2 FLOOR PLAN - VEHICLE STORAGE
SCALE: 1/16" = 1'-0"

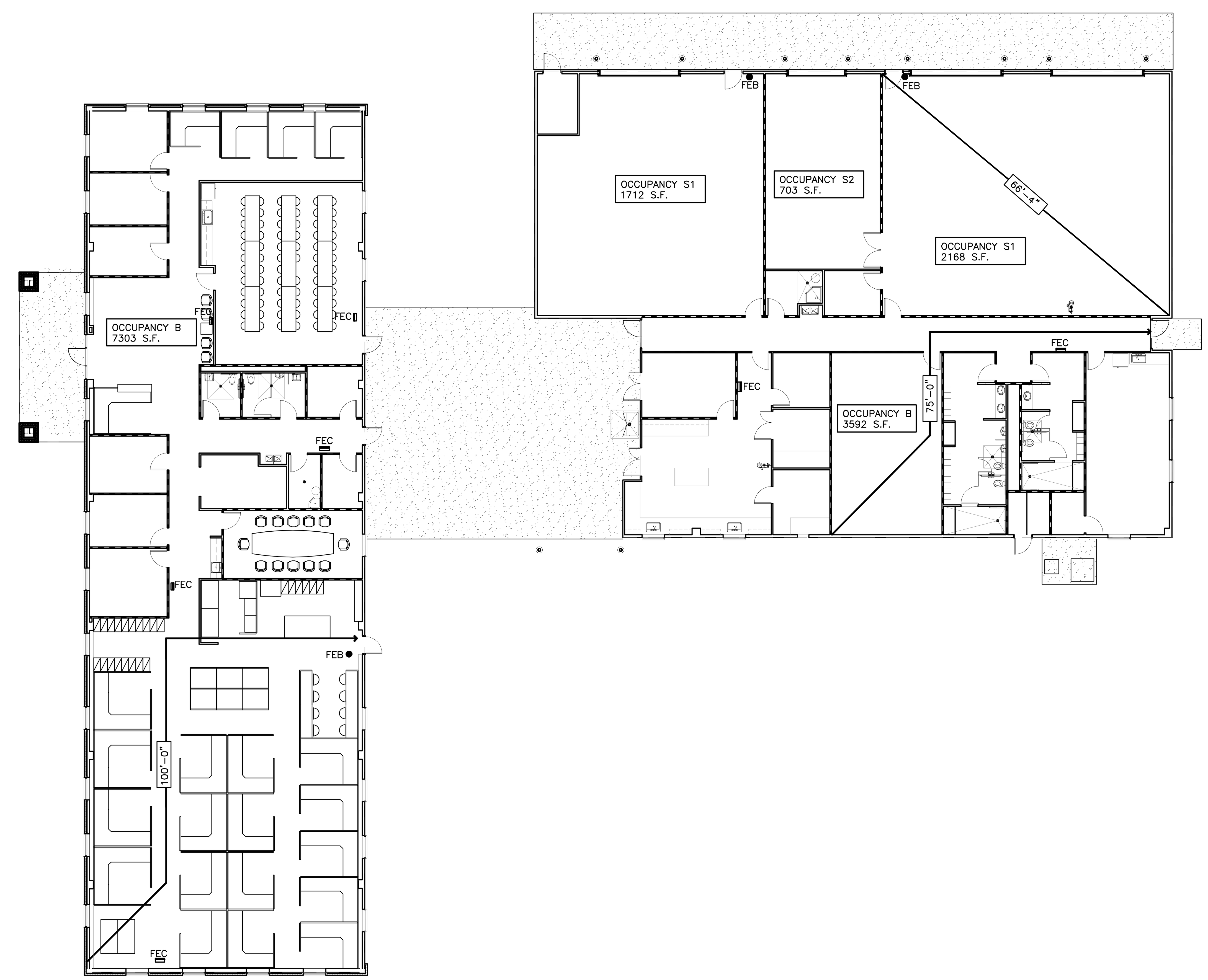

1 FLOOR PLAN - OFFICE BUILDING / LAB/ SHOP
SCALE: 1/16" = 1'-0"
FURNITURE SHOWN FOR REFERENCE ONLY (NIC)

LEGEND

- WALL
- 1 HOUR FIRE RESISTIVE ASSEMBLY RATING WALL WITH 20 MINUTE DOORS AND 5/8" TYPE "X" GYP. WALL BD. AND/OR 5/8" ABUSE RESISTANT WALL PANELS 8' HIGH
- TRAVEL DISTANCE
- FEC FIRE EXTINGUISHER CABINET
- FEB FIRE EXTINGUISHER WITH BRACKETS

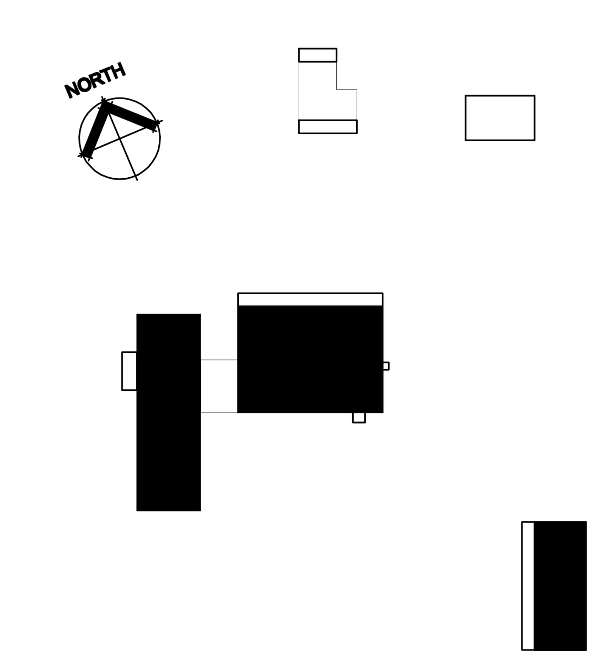

KEY PLAN

CODE COMPLIANCE PLAN

Texas Department of Transportation
125 E. 11th Street
Austin, Texas 78701-2483
(512) 416-3048
Copyright © 2005 Texas Department of Transportation

THIS DOCUMENT IS RELEASED FOR THE PURPOSE OF INFORMATION ONLY
NOT FOR REGULATORY APPROVAL, PERMITTING, OR CONSTRUCTION.

WACO AREA ENGINEER AND MAINTENANCE FACILITY
WACO, MCLENNAN COUNTY
WACO DISTRICT

Revisions

Drawn by: KAO/EE
Project No. CBC4704-00672
Date 05.21.2007
Sheet No. A2.0
of 37 sheets

NOTE: THIS DRAWING WAS CREATED FOR PRODUCTION ON 22" x 34" SHEET SIZE. DO NOT SCALE PRINTS.

CADFILE: T:\MNT\MD\03FTW\CBC4704-00-337\02-77-470400337\Acad\prototypical pdfs\waco\Acad\Arch\0672_A2_0.dwg Plotted: Fri, Aug. 07, 2009 @ 12:50 PM By: MBAZAN

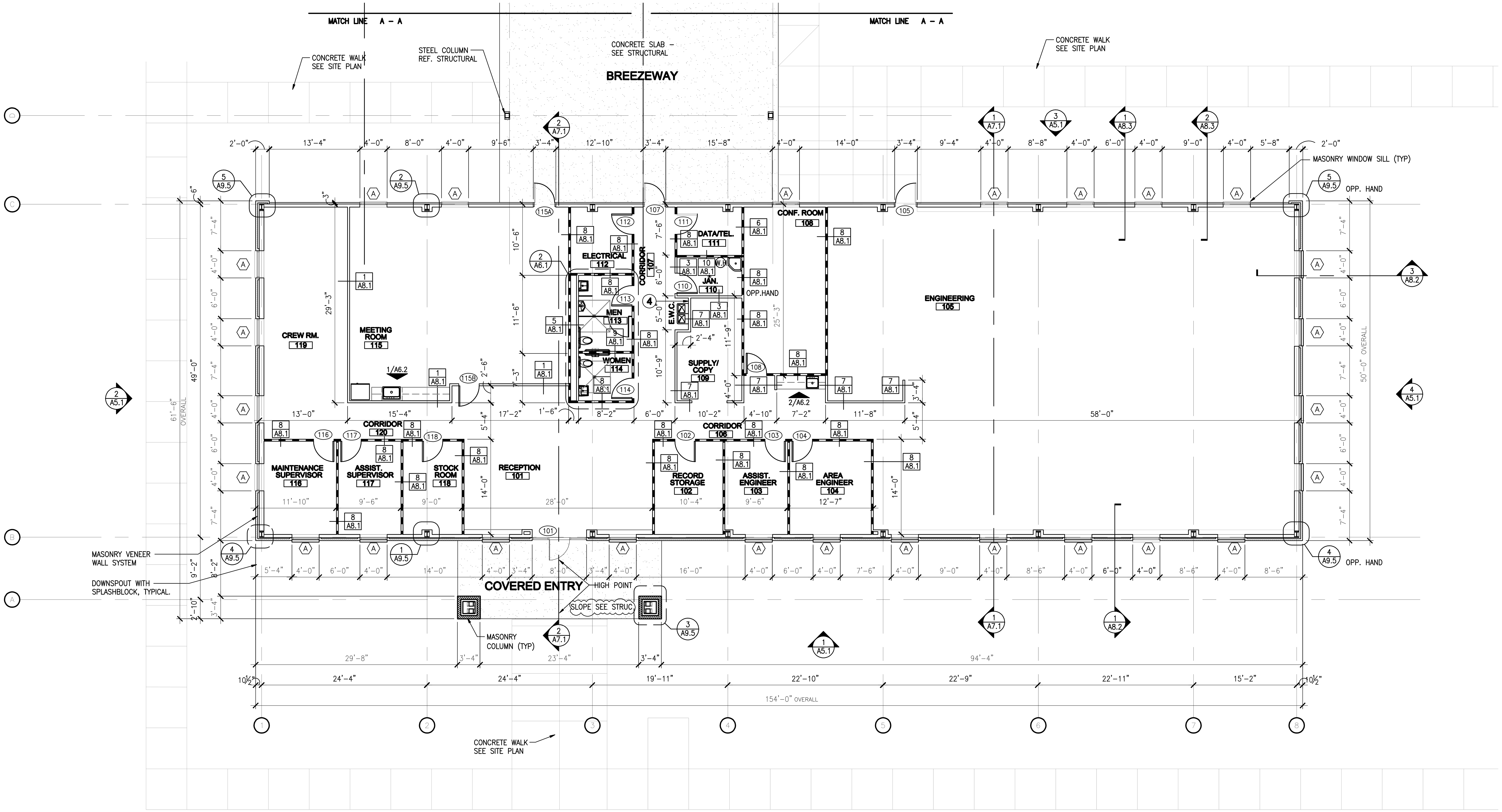

1 FLOOR PLAN - OFFICE BUILDING

SCALE: 1/8" = 1'-0"

GENERAL NOTES:

1. DIMENSIONS ARE FROM FACE OF STUD TO EXTERIOR FACE OF MASONRY OR METAL PANEL.
2. DIMENSIONS OF MASONRY ARE NOMINAL ON PLANS AND ACTUAL OF DETAILS.
3. SEE SHEET G1.1 FOR SYMBOLS DESCRIPTIONS.
4. APPLY FRP FULL HEIGHT TO ALL THREE SIDES OF ELEC. WATER COOLER ALCOVES AND INSTALL CORNER GUARDS AT OUTSIDE CORNERS.

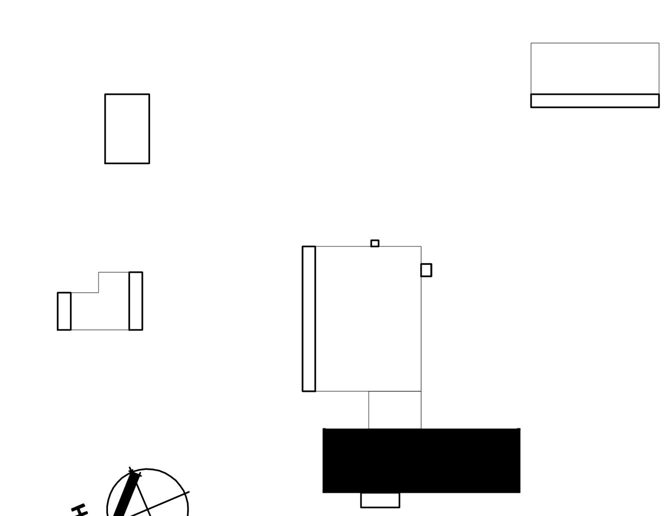

KEY PLAN

Texas Department of Transportation
125 E. 11th Street
Austin, Texas 78701-2483
(512) 416-2940

Copyright © 2005 Texas Department of Transportation

THIS DOCUMENT IS RELEASED FOR THE PURPOSE OF INFORMATION ONLY NOT FOR REGULATORY APPROVAL, PERMITTING, OR CONSTRUCTION.

WACO AREA ENGINEER AND MAINTENANCE FACILITY

WACO, MCLENNAN COUNTY WACO DISTRICT

Revisions
08/29/07

Drawn by: KAO/EE
Project No. CBC4704-00672
Date 05.21.2007
Sheet No. A2.1 of 37 sheets

FLOOR PLAN - OFFICE

Plotted: Fri, Aug. 07, 2009 @ 12:51 PM By: MBAZAN

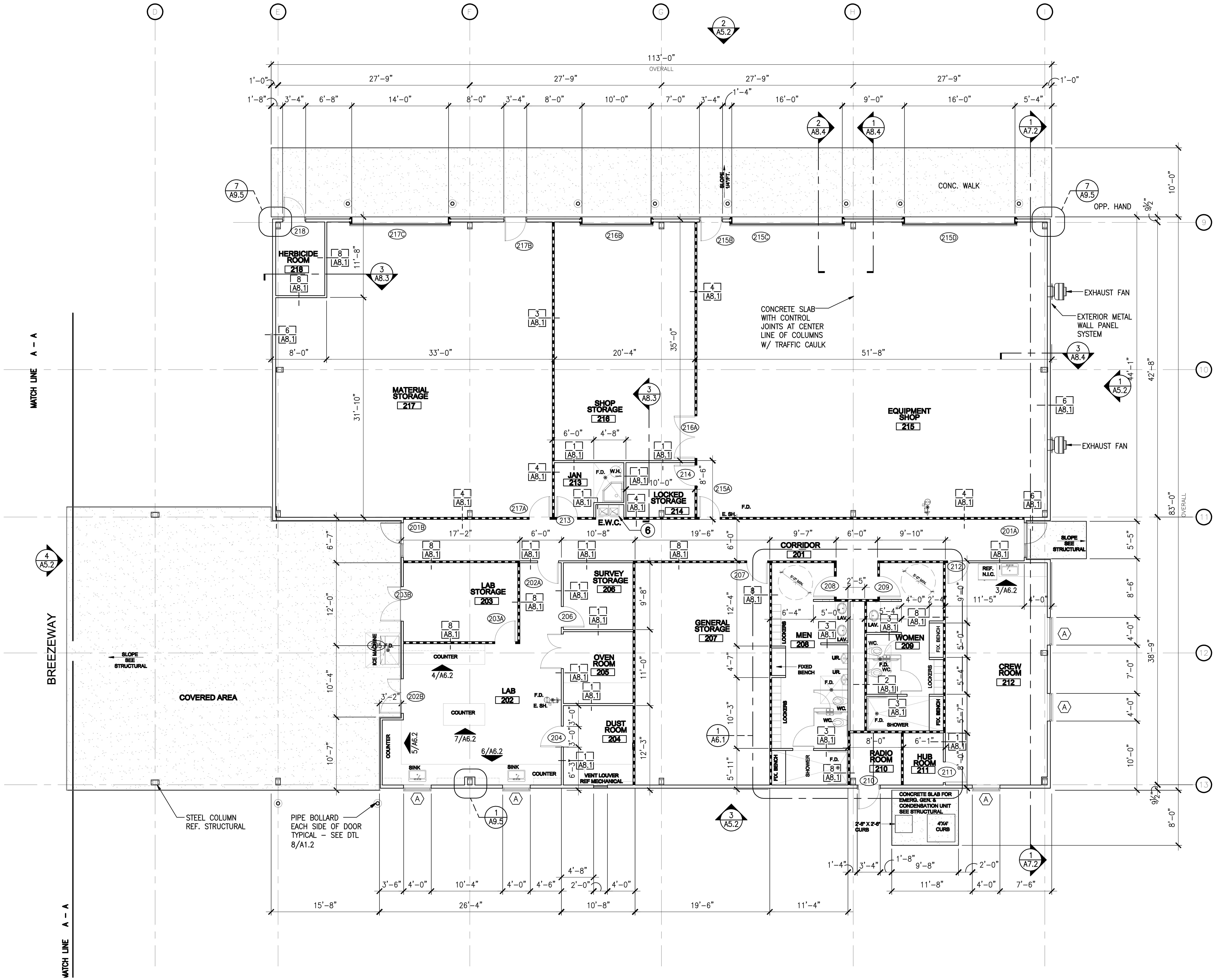

1 FLOOR PLAN - LAB / SHOP BUILDING
SCALE: 1/8" = 1'-0"

GENERAL NOTES:

1. DIMENSIONS ARE FROM FACE OF STUD TO EXTERIOR FACE OF MASONRY OR METAL PANEL.
2. DIMENSIONS OF MASONRY ARE NOMINAL ON PLANS AND ACTUAL OF DETAILS.
3. SEE SHEET G1.1 FOR SYMBOLS DESCRIPTIONS.

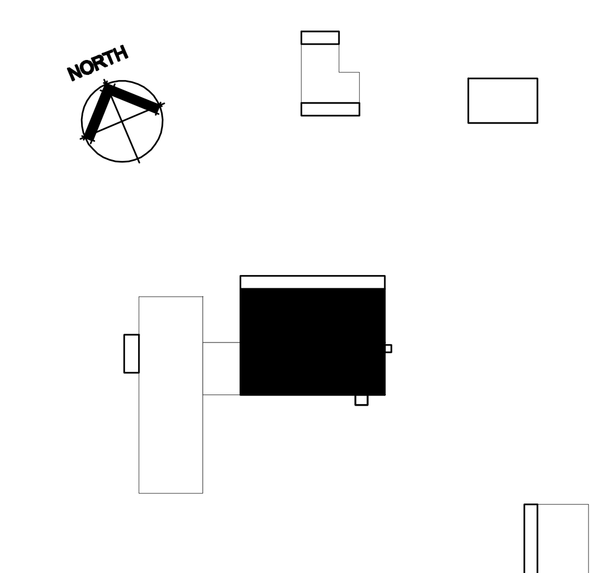

KEY PLAN

FLOOR PLAN - LAB / SHOP

Texas Department of Transportation
125 E. 11th Street
Austin, Texas 78701-2483
(512) 416-3848

Copyright © 2005 Texas Department of Transportation

THIS DOCUMENT IS RELEASED FOR THE PURPOSE OF INFORMATION ONLY
NOT FOR REGULATORY APPROVAL, PERMITTING, OR CONSTRUCTION.

WACO AREA ENGINEER AND MAINTENANCE FACILITY
WACO, MCLENNAN COUNTY WACO DISTRICT

Revisions

Drawn by: KAO/EE
Project No. CBC4704-00672
Date 05.21.2007
Sheet No. A2.2
of 37 sheets

NOTE: THIS DRAWING WAS CREATED FOR PRODUCTION ON 22" x 34" SHEET SIZE. DO NOT SCALE PRINTS.

CADFILE: T:\MNTFMD02FTW\CBC4704-00-637\02-77-470400637\Acad\prototypical pdfs\waco\Acad\Arch\0672_A2_2.dwg Plotted: Fri. Aug. 07, 2009 @ 12:51 PM By: MBAZAN

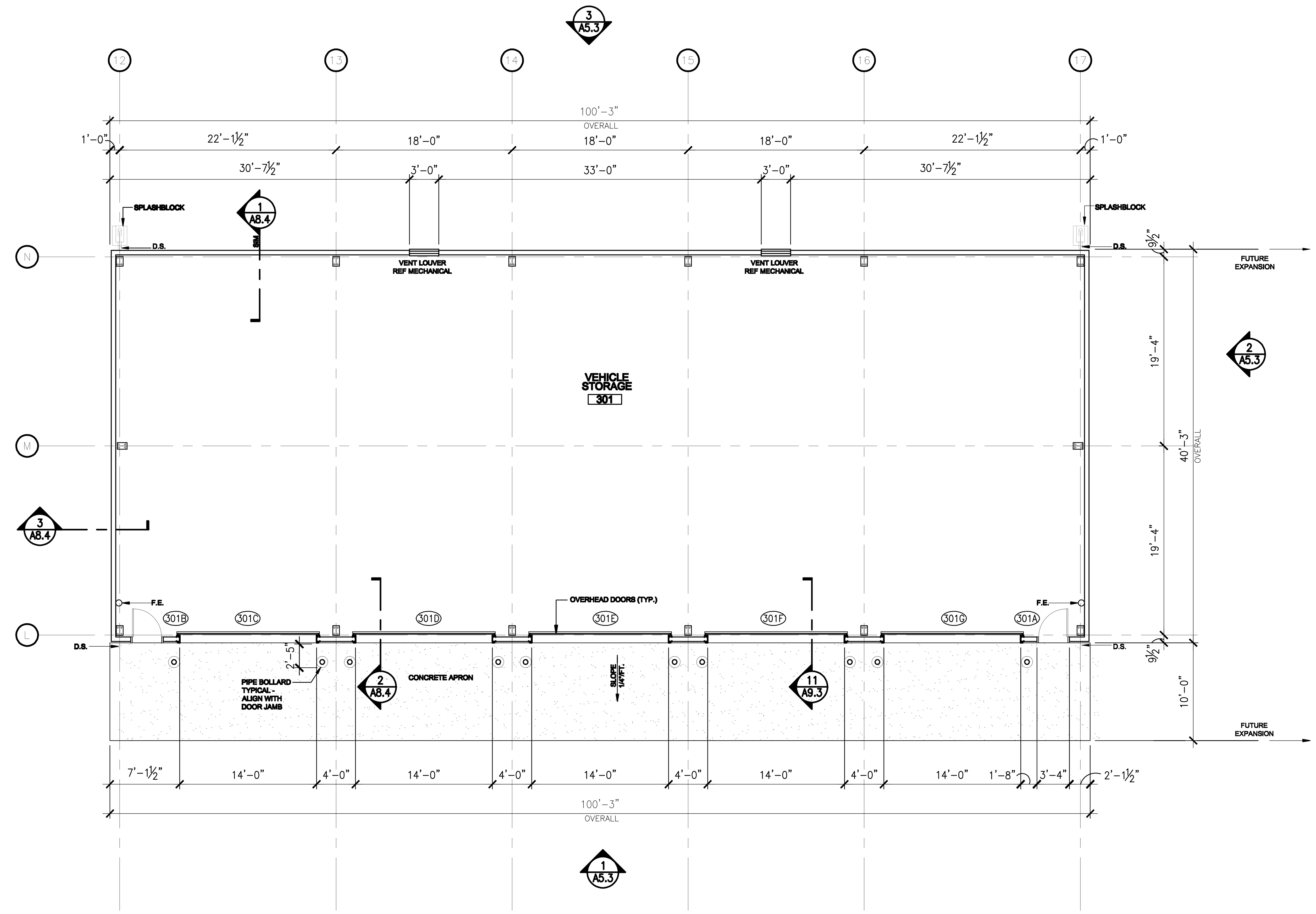

1 FLOOR PLAN - VEHICLE STORAGE BUILDING

SCALE: 1/8" = 1'-0"

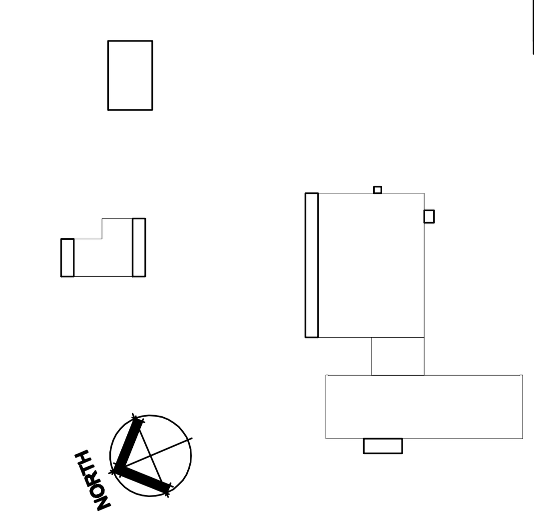

KEY PLAN

FLOOR PLAN - VEHICLE STORAGE

NOTE: THIS DRAWING WAS CREATED FOR PRODUCTION ON 22" x 34" SHEET SIZE. DO NOT SCALE PRINTS.

Texas Department of Transportation
125 E. 11th Street
Austin, Texas 78701-2483
(512) 416-3048
Copyright © 2005 Texas Department of Transportation

THIS DOCUMENT IS RELEASED FOR THE PURPOSE OF INFORMATION ONLY

NOT FOR REGULATORY APPROVAL, PERMITTING, OR CONSTRUCTION.

WACO AREA ENGINEER AND MAINTENANCE FACILITY
WACO, MCLENNAN COUNTY
WACO DISTRICT

Revisions

Drawn by: KAO/EE
Project No. CBC4704-00672
Date 05.21.2007
Sheet No. A2.3
of 37 sheets

CADFILE: T:\MNT\FMD\02FTW\CBC4704-00-537\02-77-4704\00537\Acad\prototypical pdfs\waco\Acad\Arch\0672_A2_3.dwg Plotted: Fri, Aug. 07, 2009 @ 12:52 PM By: MBAZAN

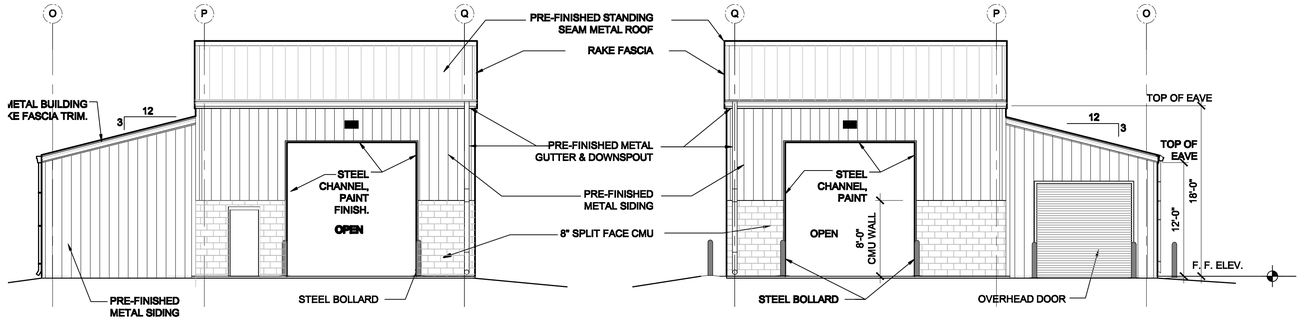

3 SOUTH ELEVATION
SCALE: 1/8"=1'-0"

2 NORTH ELEVATION
SCALE: 1/8"=1'-0"

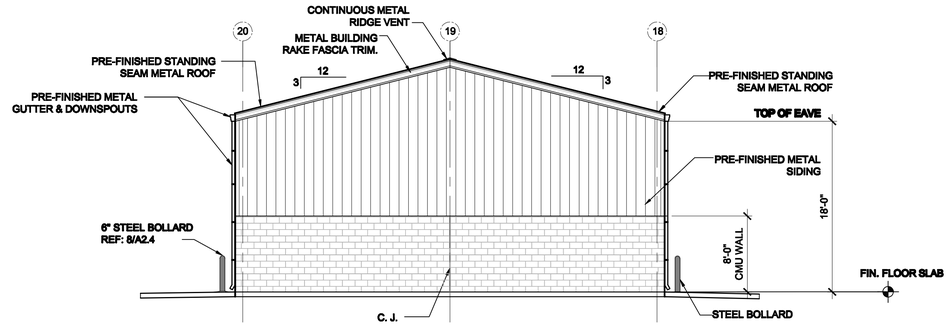

4 EAST ELEVATION
SCALE: 1/8"=1'-0"

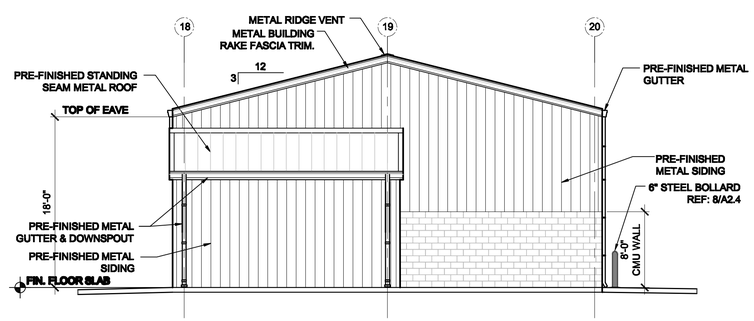

5 WEST ELEVATION
SCALE: 1/8"=1'-0"

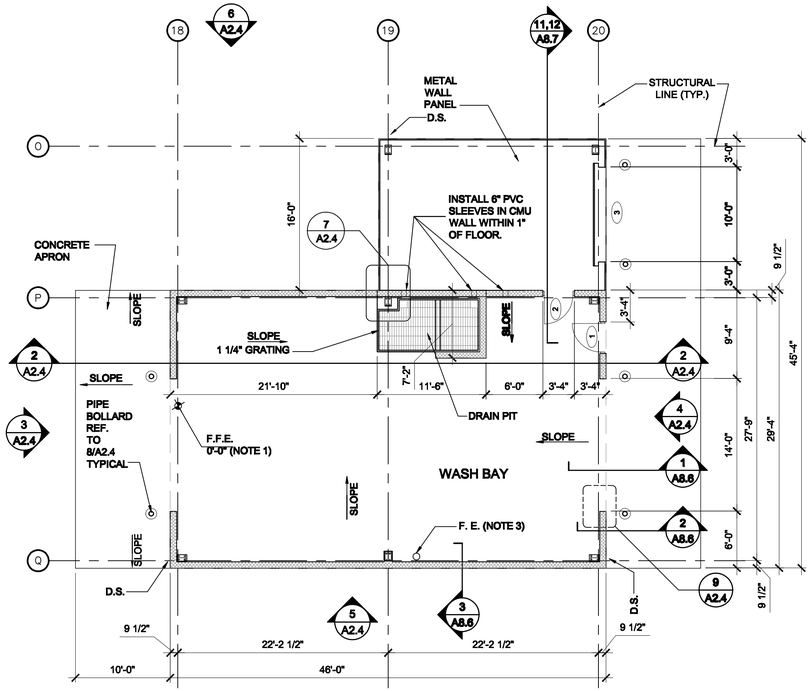

1 FLOOR PLAN
SCALE: 1/8"=1'-0"

NOTE:
1. SET FINISHED FLOOR ELEVATION (F.F.E.) 6" ABOVE HIGHEST FINIISHED GRADE POINT AT PERIMETER OF NEW BUILDING.
2. LT. BROOM FIN. ON CONCRETE
3. FIRE EXT. EQUAL TO LARSEN 'MP10' ABC TYPE W/ WALL BRACKET & MEETS NFPA 10.

NORTH

FLOOR PLAN / ELEVATIONS - WASH BAY

NOTE: THIS DRAWING WAS CREATED FOR PRODUCTION ON 22" x 34" SHEET SIZE. DO NOT SCALE PRINTS.

Texas Department of Transportation
125 E. 11th Street
Austin, Texas 78701-2483
(512) 416-3000

Copyright © 2005 Texas Department of Transportation

THIS DOCUMENT IS RELEASED FOR THE PURPOSE OF
INFORMATION ONLY
NOT FOR REGULATORY
APPROVAL, PERMITTING,
OR CONSTRUCTION.

WACO AREA ENGINEER AND MAINTENANCE FACILITY
WACO, MCLENNAN COUNTY
WACO DISTRICT

Revisions

Drawn by:
KAO/EE
Project No.
CBC4704-00672
Date
05.21.2007
Sheet No.
A2.4
of 37 sheets

CADFILE: T:\MAINTRA\DGN\TWC\CBC4704-00-697\03-77-4704006377\Accdocs\cadd\dgn\sd pdf\texas\Axis\Axis\vm\00672_A2_4.dwg Plotted: Fri, Aug. 07, 2009 @ 12:22 PM By: MBAZAN

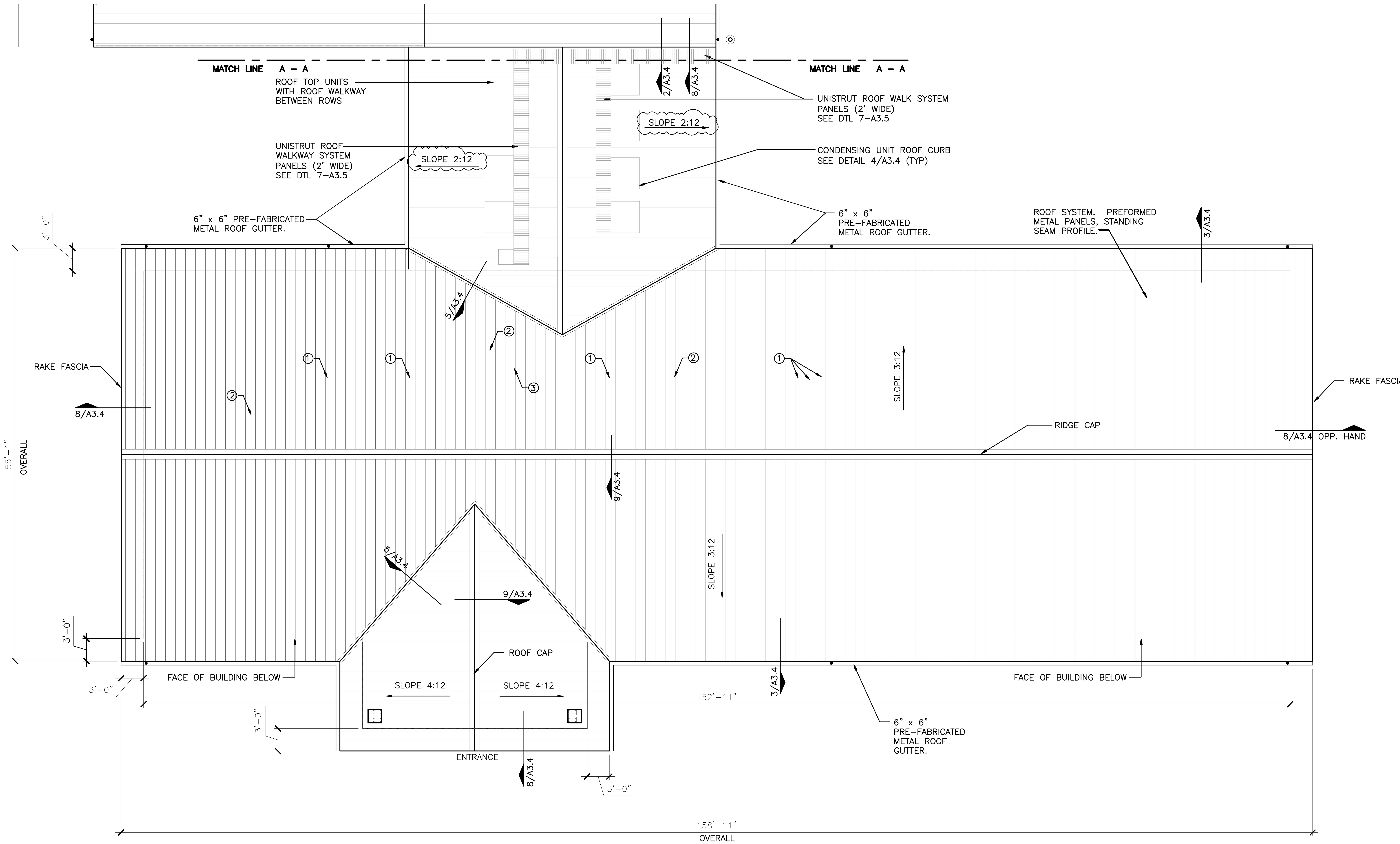

1 ROOF PLAN - OFFICE BUILDING
SCALE: 1/8" = 1'-0"

NOTES:
1. OUTSIDE AIR INTAKE – SEE DETAIL 10&11/A3.4
2. PLUMBING VENT – SEE DETAIL 1/A3.4
3. EXHAUST JACK – SEE DETAIL 4/A3.4

NOTES:
1 - VENTS THRU ROOF ARE FOR ARCH. AND MEP COORDINATION. CONTRACTOR SHALL VERIFY LOCATION & QUANTITY W/ MECHANICAL CONTRACTOR
2 - ALL THRU ROOF VENTS TO BE LOCATED ON OPPOSITE SIDE OF RIDGE FROM ENTRY

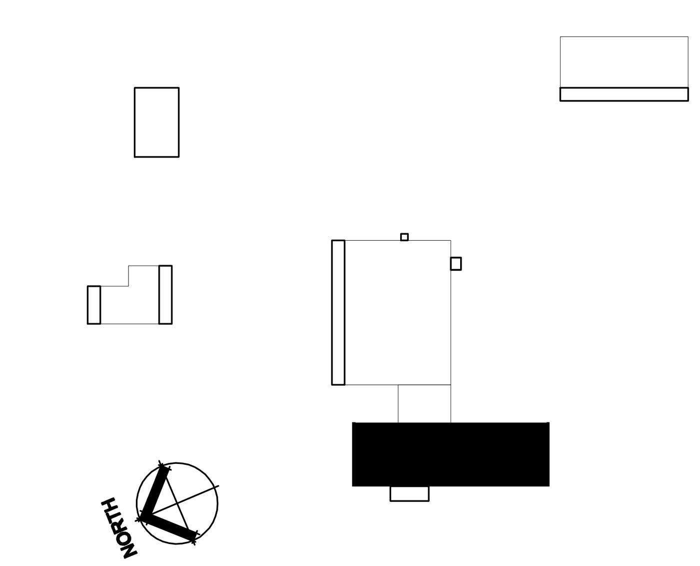

KEY PLAN

Texas Department of Transportation

THIS DOCUMENT IS RELEASED FOR THE PURPOSE OF INFORMATION ONLY
NOT FOR REGULATORY APPROVAL, PERMITTING, OR CONSTRUCTION.

WACO AREA ENGINEER AND MAINTENANCE FACILITY
WACO, MCLENNAN COUNTY
WACO DISTRICT

Revisions
08/29/07

Drawn by: KAO/EE
Project No. CBC4704-00672
Date 05.21.2007
Sheet No. A3.1 of 37 sheets

ROOF PLAN - OFFICE

NOTE: THIS DRAWING WAS CREATED FOR PRODUCTION ON 22" x 34" SHEET SIZE. DO NOT SCALE PRINTS.

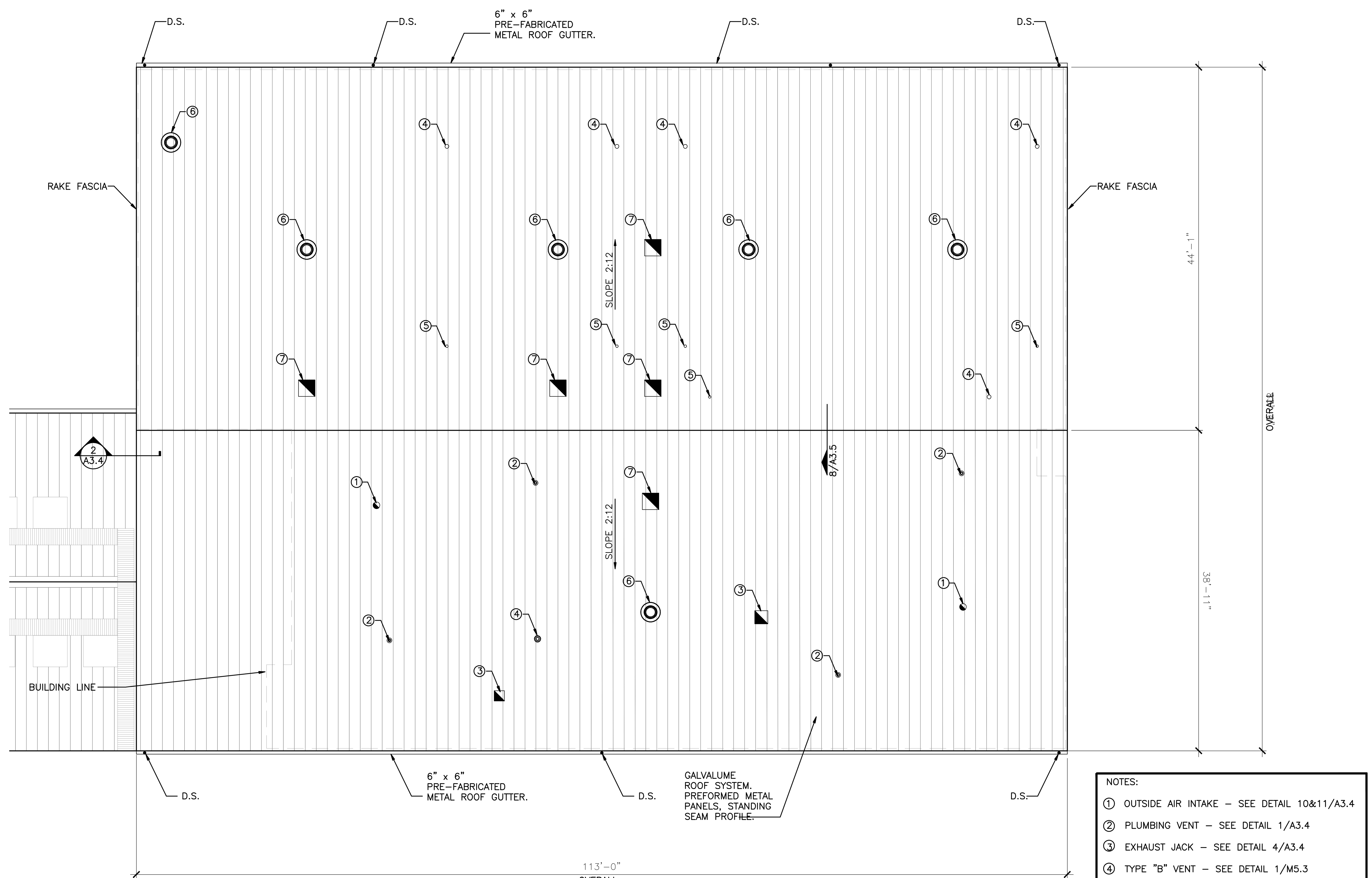

NOTES:

1. OUTSIDE AIR INTAKE – SEE DETAIL 10&11/A3.4
2. PLUMBING VENT – SEE DETAIL 1/A3.4
3. EXHAUST JACK – SEE DETAIL 4/A3.4
4. TYPE "B" VENT – SEE DETAIL 1/M5.3
5. COMBUSTION AIR VENT – SEE DETAIL 1/M5.3
6. EXHAUST FAN – SEE DETAIL 4/A3.4
7. INTAKE HOOD – SEE DETAIL 4/A3.4

1 ROOF PLAN - SHOP/LAB BUILDING

SCALE: 1/8" = 1'-0"

NOTE: VENTS THRU ROOF ARE FOR ARCH. AND MEP COORDINATION. CONTRACTOR SHALL VERIFY LOCATION & QUANTITY W/ MECHANICAL CONTRACTOR

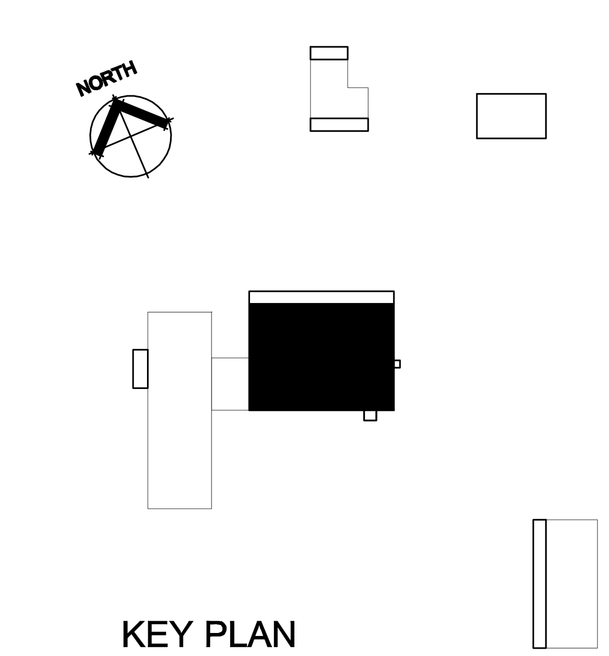

KEY PLAN

Texas Department of Transportation

THIS DOCUMENT IS RELEASED FOR THE PURPOSE OF INFORMATION ONLY NOT FOR REGULATORY APPROVAL, PERMITTING, OR CONSTRUCTION.

WACO AREA ENGINEER AND MAINTENANCE FACILITY

WACO, MCLENNAN COUNTY
WACO DISTRICT

Revisions

Drawn by: KAO/EE
Project No. CBC4704-00672
Date 05.21.2007
Sheet No. A3.2 of 37 sheets

ROOF PLAN - LAB/SHOP

NOTE: THIS DRAWING WAS CREATED FOR PRODUCTION ON 22" x 34" SHEET SIZE. DO NOT SCALE PRINTS.

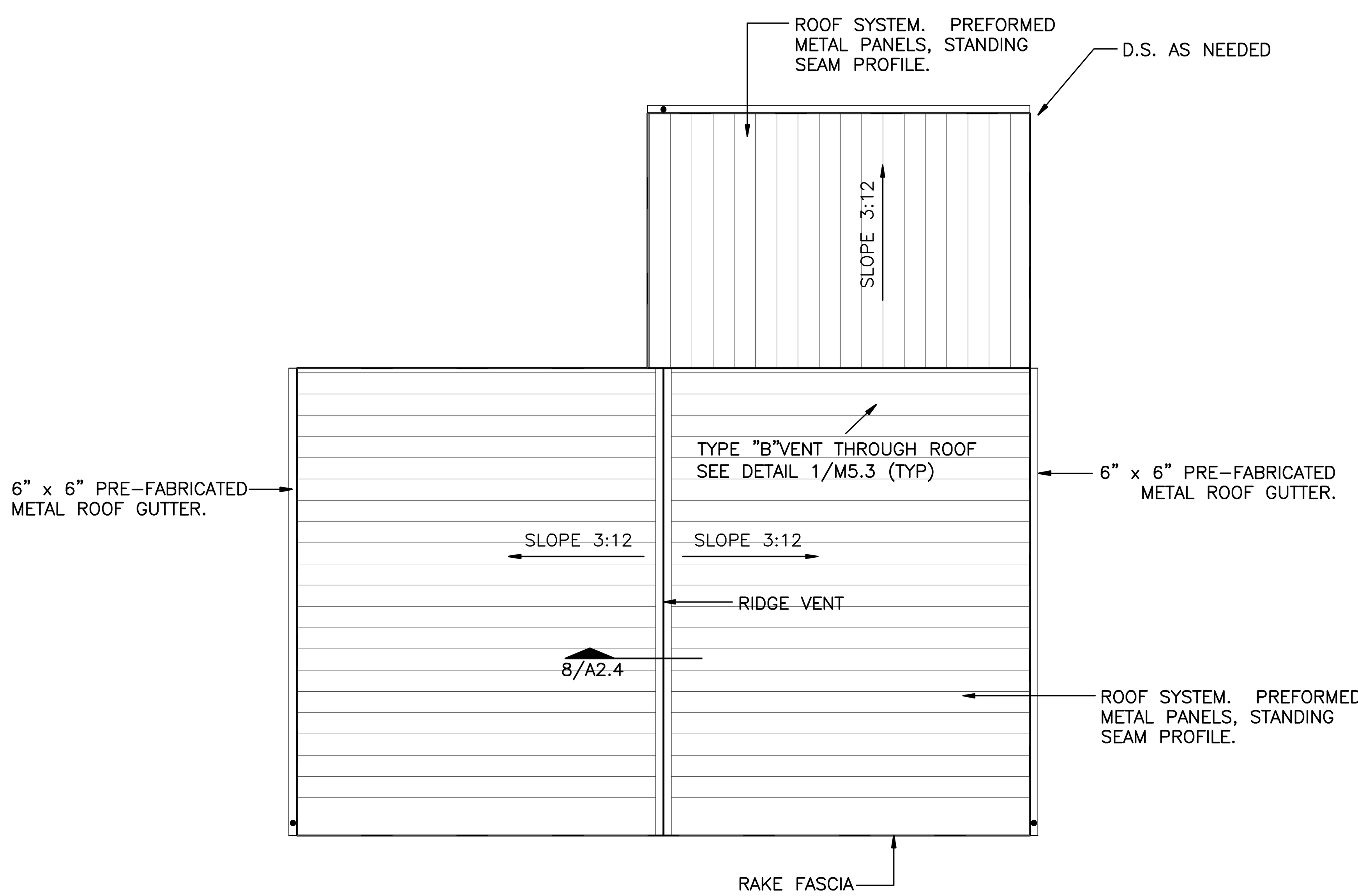

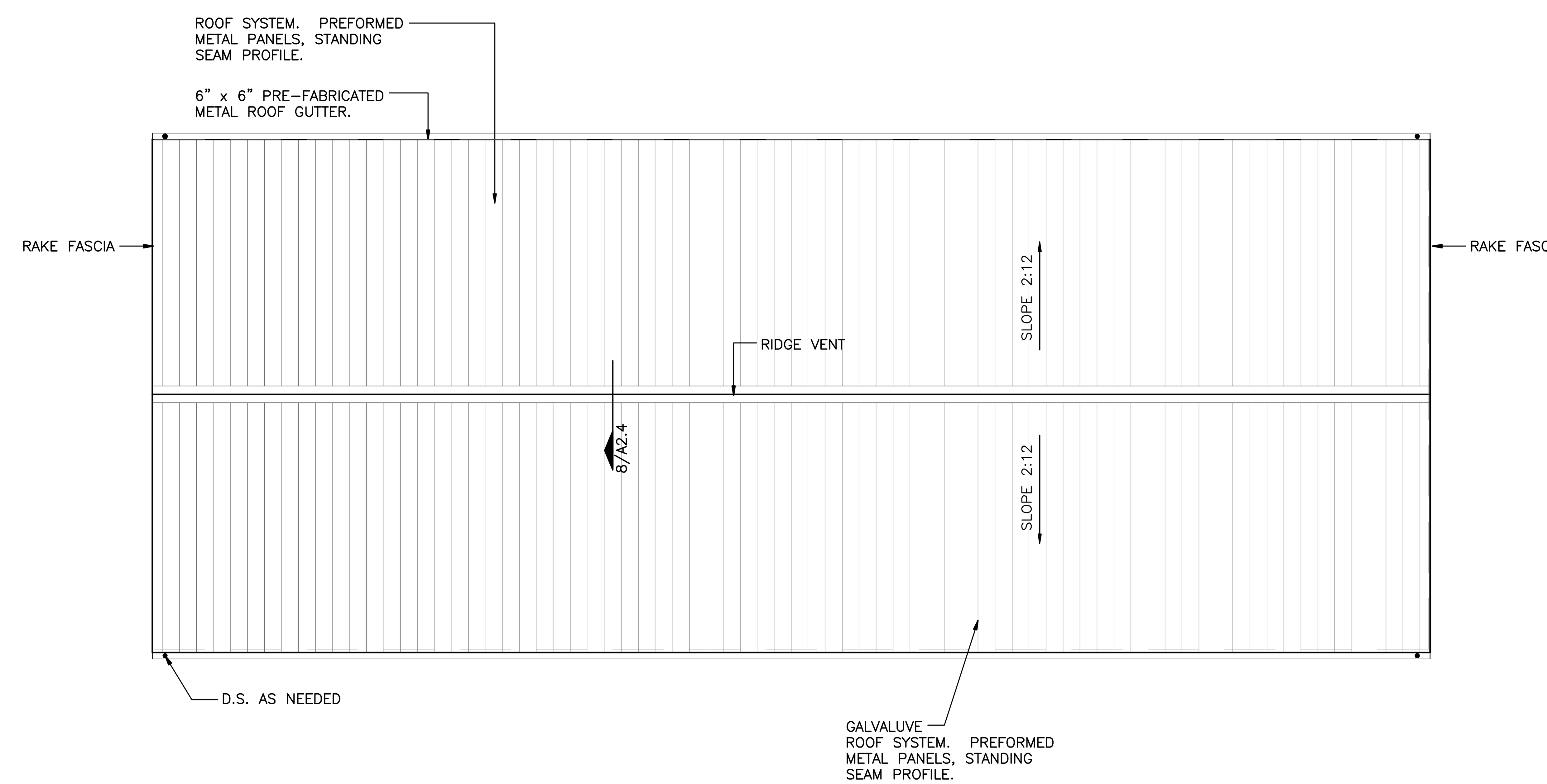

1 **ROOF PLAN - WASH BAY**
SCALE: 1/8" = 1' - 0"

2 **ROOF PLAN - VEHICLE STORAGE**
SCALE: 1/8" = 1' - 0"

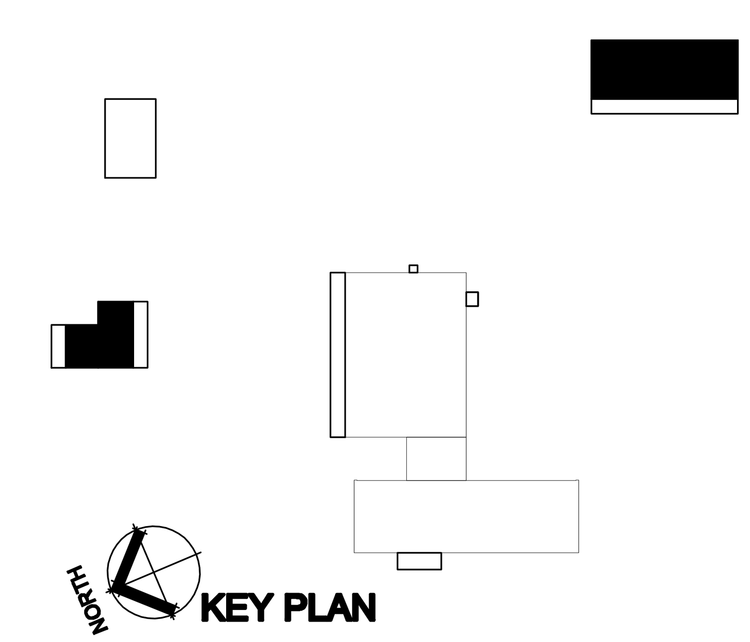

KEY PLAN

NOTE: VENTS THRU ROOF ARE FOR ARCH. AND MEP COORDINATION. CONTRACTOR SHALL VERIFY LOCATION & QUANTITY W/ MECHANICAL CONTRACTOR

Texas Department of Transportation

THIS DOCUMENT IS RELEASED FOR THE PURPOSE OF INFORMATION ONLY
NOT FOR REGULATORY APPROVAL, PERMITTING, OR CONSTRUCTION.

WACO AREA ENGINEER AND MAINTENANCE FACILITY
WACO, MCLENNAN COUNTY
WACO DISTRICT

Revisions

Drawn by: KAO/EE
Project No. CBC4704-00672
Date 05.21.2007
Sheet No. A3.3
of 37 sheets

ROOF PLAN - WASH BAY & VEHICLE STORAGE BUILDINGS

NOTE: THIS DRAWING WAS CREATED FOR PRODUCTION ON 22" x 34" SHEET SIZE. DO NOT SCALE PRINTS.

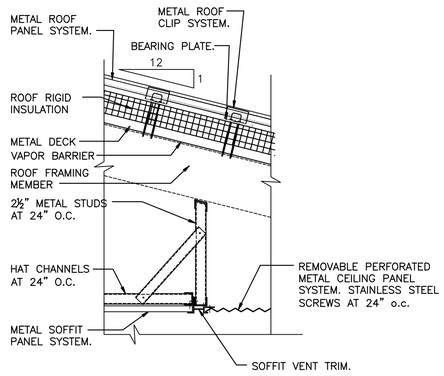

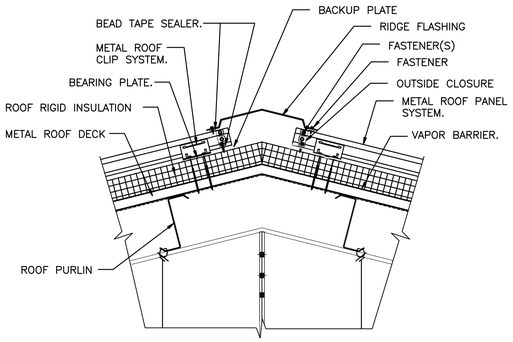

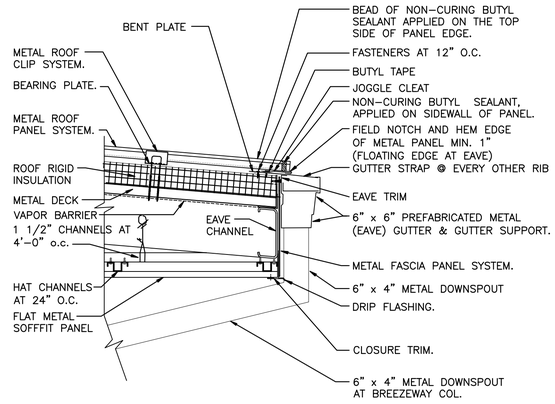

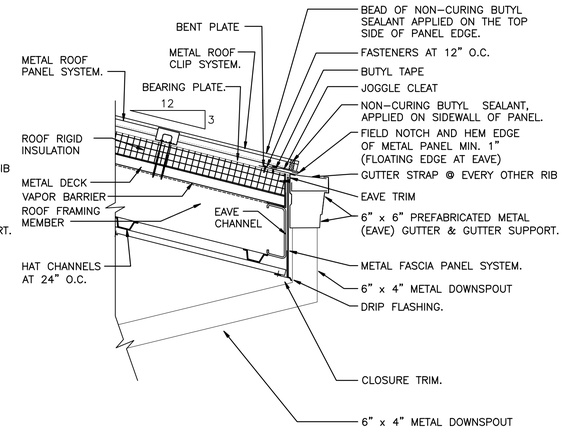

12 REMOVABLE PANEL DETAIL
SCALE: 1" = 1'-0"

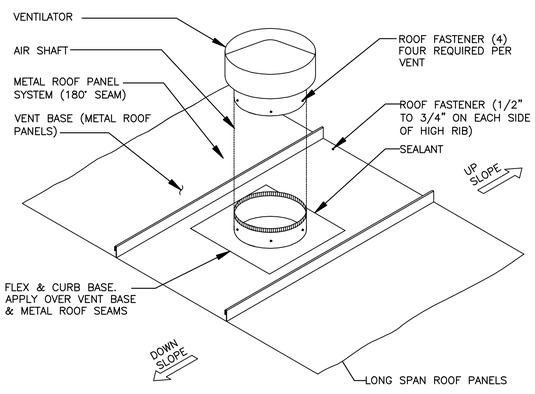

9 RIDGE CAP DETAIL
SCALE: 1" = 1'-0"

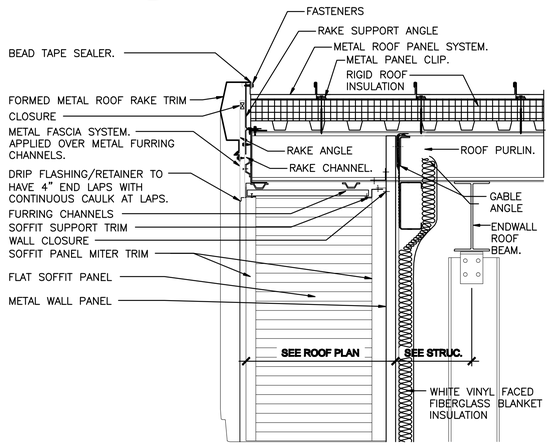

6 EAVE DETAIL
SCALE: 1" = 1'-0"

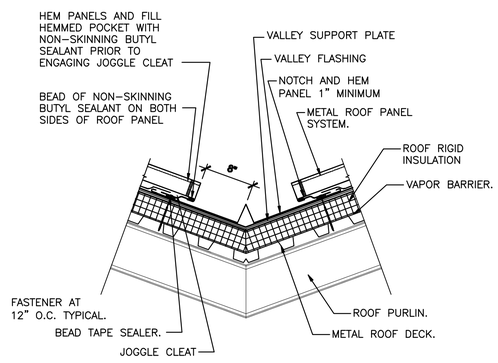

3 EAVE DETAIL
SCALE: 1" = 1'-0"

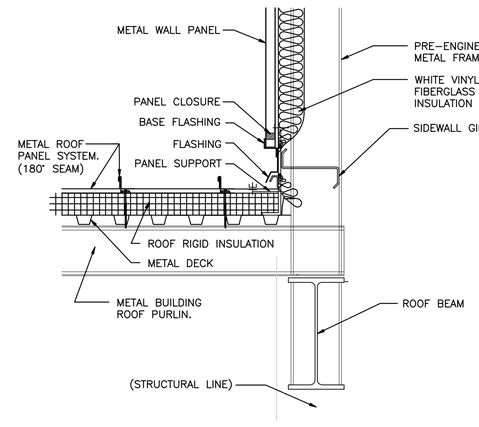

11 DETAIL - OUTSIDE AIR INTAKE
SCALE: N.T.S.

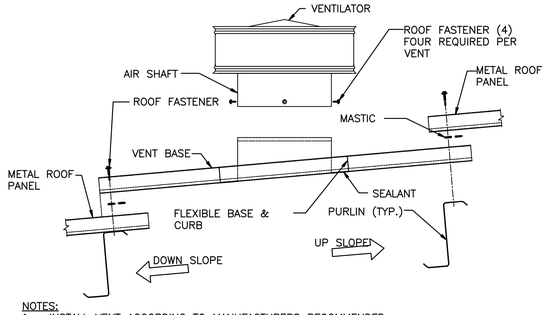

NOTES:
1. INSTALL VENT ACCORDING TO MANUFACTURERS RECOMMENDED INSTALLATION PROCEDURES.
2. SEAL ALL CONNECTIONS WITH GUTTER SEAL TO INSURE WEATHER TIGHTNESS.
3. TAPE MASTIC SIZE SHALL BE THE SAME AS FURNISHED FOR ROOF PANELS.

8 RAKE DETAIL
SCALE: 1" = 1'-0"

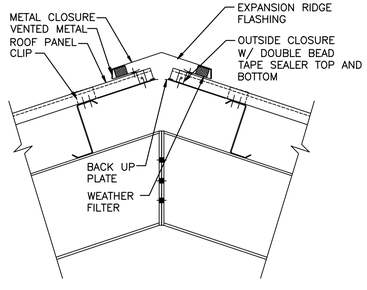

5 VALLEY DETAIL
SCALE: 1" = 1'-0"

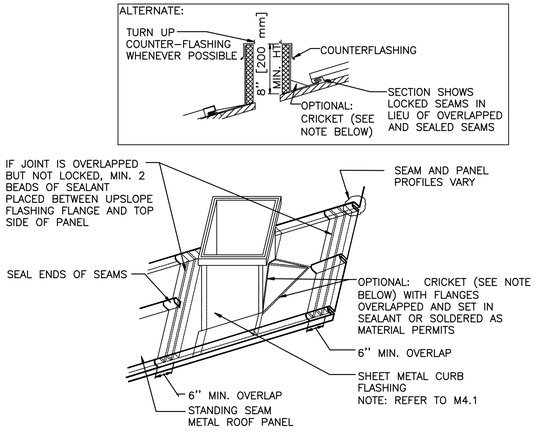

2 FLASHING DETAIL AT ROOF
SCALE: 1" = 1'-0"

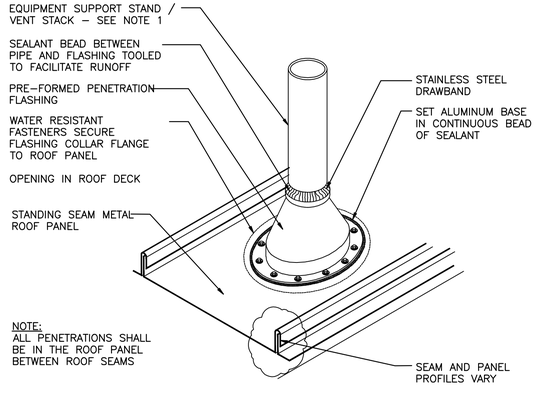

10 SECTION - OUTSDE AIR INTAKE
SCALE: N.T.S.

7 RIDGE VENT DETAIL
SCALE: N.T.S

4 CURB DETAIL (BY ROOF MFG.)
SCALE: N.T.S.

1 VTR (VENT THROUGH ROOF) DETAIL
SCALE: N.T.S.

ROOF DETAILS

NOTE: THIS DRAWING WAS CREATED FOR PRODUCTION ON 22" x 34" SHEET SIZE. DO NOT SCALE PRINTS.

Texas Department of Transportation
125 E. 11th Street
Austin, Texas 78701-2483
(512) 416-2000

Copyright © 2005 Texas Department of Transportation

THIS DOCUMENT IS RELEASED FOR THE PURPOSE OF INFORMATION ONLY NOT FOR REGULATORY APPROVAL, PERMITTING, OR CONSTRUCTION.

WACO AREA ENGINEER AND MAINTENANCE FACILITY
WACO, MCLENNAN COUNTY
WACO DISTRICT

Revisions

Drawn by: JOT
Project No. CBC4704-00672
Date 05.21.2007
Sheet No.

A3.4
of 37 sheets

CADFILE: T:\MAIT\M\200\FTW\CBC4704-00-83703-77-4704008372\sheets\proto\typical pdf\sheets\Asset\Arch\0372_A3_4.dwg Plotted: Fri, Aug. 07, 2009 @ 12:55 PM By: MBAZAN

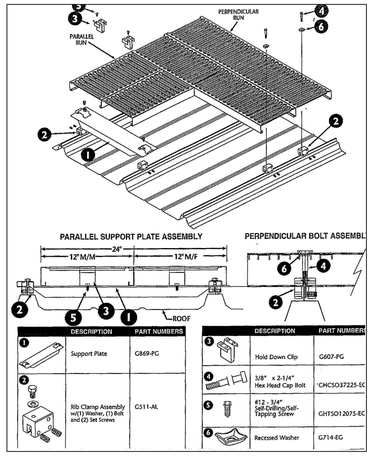

	DESCRIPTION	PART NUMBERS
1	Support Plate	G869-PG
2	Rib Clamp Assembly w/(1) Washer, (1) Bolt and (2) Set Screws	CS11-AL

	DESCRIPTION	PART NUMBERS
3	Hold Down Clip	G607-PG
4	3/8" x 2-1/4" Hex Head Cap Bolt	*CHCS037225-SC
5	#12 - 3/4" Self-Drilling/Self-Tapping Screw	CHTSO12075-EC
6	Recessed Washer	G714-EG

5 UNISTRUT ROOF WALWAYS (1-800-284-1412)
SCALE: N.T.S.

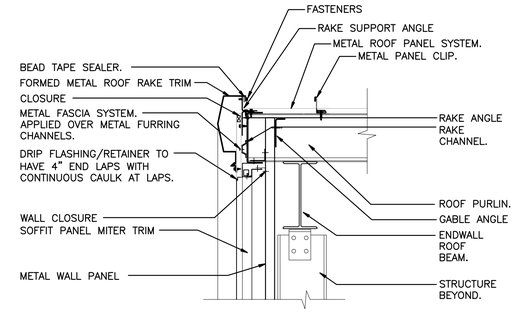

3 RAKE DETAIL
SCALE: 1" = 1'-0"

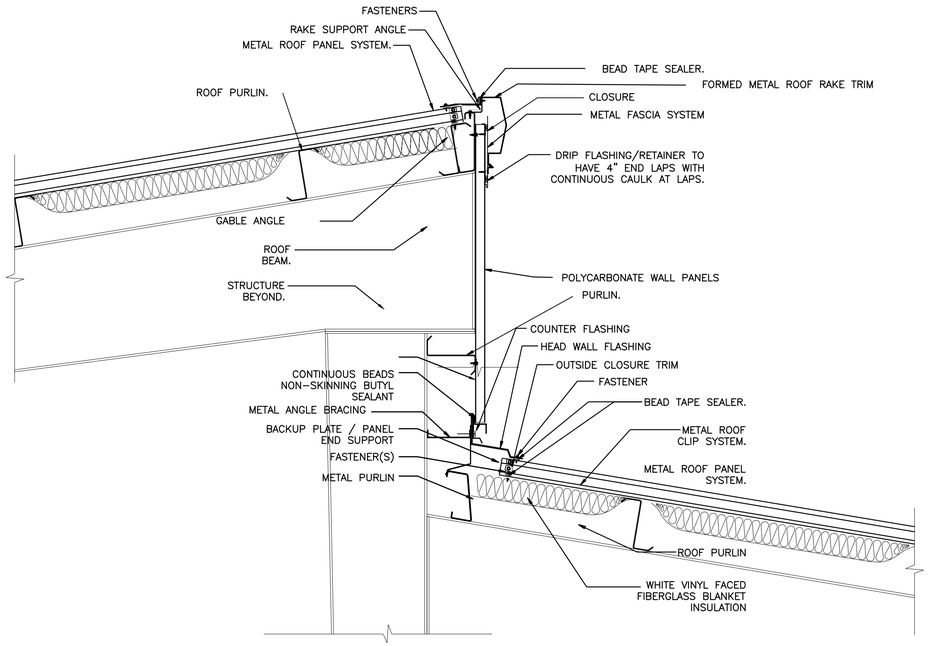

4 RAKE DETAIL AT LAB / SHOP
SCALE: 1" = 1' - 0"

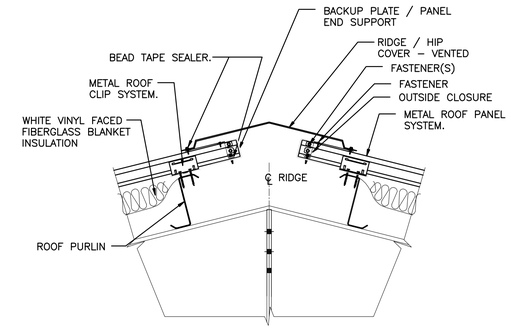

2 RIDGE VENT DETAIL
SCALE: 1" = 1'-0"

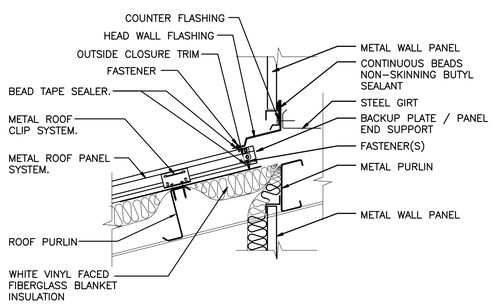

1 SIDEWALL / ROOF TRANSITION
SCALE: 1" = 1'-0"

ROOF DETAILS

NOTE: THIS DRAWING WAS CREATED FOR PRODUCTION ON 22" x 34" SHEET SIZE. DO NOT SCALE PRINTS.

Texas Department of Transportation
125 E. 11th Street
Austin, Texas 78701-2483
(512) 416-2000

Copyright © 2005 Texas Department of Transportation

THIS DOCUMENT IS RELEASED FOR THE PURPOSE OF
INFORMATION ONLY
NOT FOR REGULATORY
APPROVAL, PERMITTING,
OR CONSTRUCTION.

WACO AREA ENGINEER AND MAINTENANCE FACILITY
WACO, MCLENNAN COUNTY
WACO DISTRICT

Revisions

Drawn by:
KAO/EE
Project No.
CBC4704-00672
Date
05.21.2007
Sheet No.

A3.5
of 37 sheets

CADFILE: T:\MNTPAVD\02FTW\CBC4704-00-00\703-7F-FY04\00672\Acad\prints\typical pdf\waco\Acad\Arch\00672_A3_5.dwg Plotted: Fri, Aug. 07, 2009 @ 12:28 PM By: MBAZAN

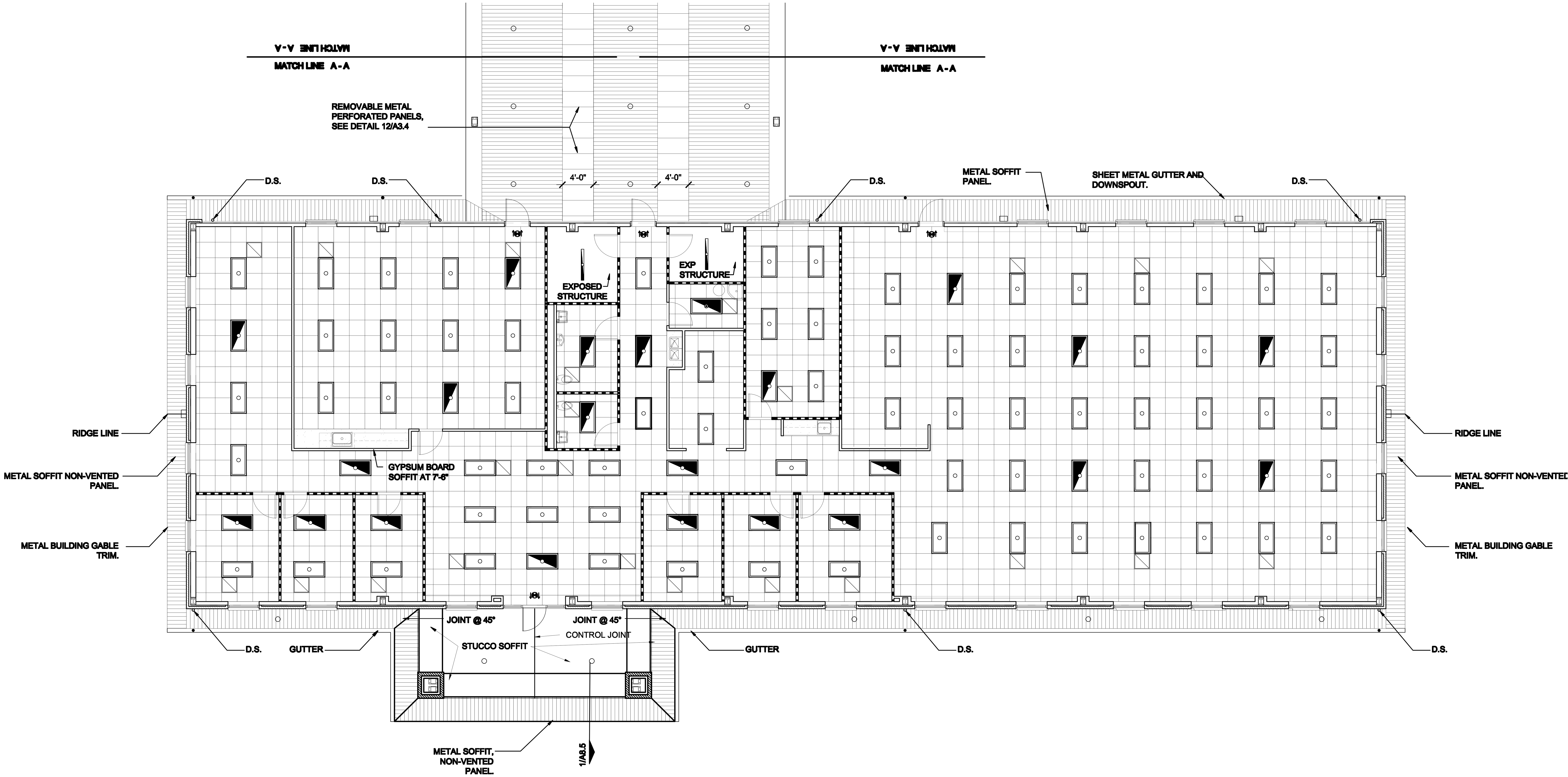

1 REFLECTED CEILING PLAN - OFFICE

SCALE: 1/8" = 1'-0"

LEGEND

- RETURN AIR DIFFUSER
- SUPPLY AIR DIFFUSER
- LIGHT FIXTURE REF: ELEC.
- EMERGENCY LIGHT FIXTURE REF: ELEC.
- 2' X 2' SUSPENDED ACOUSTICAL CEILING GRID
- RECESSED LIGHT FIXTURE
- LIGHT FIXTURE REF: ELEC.
- EXIT LIGHT
- LIGHT FIXTURE REF: ELEC.
- GYP. BOARD

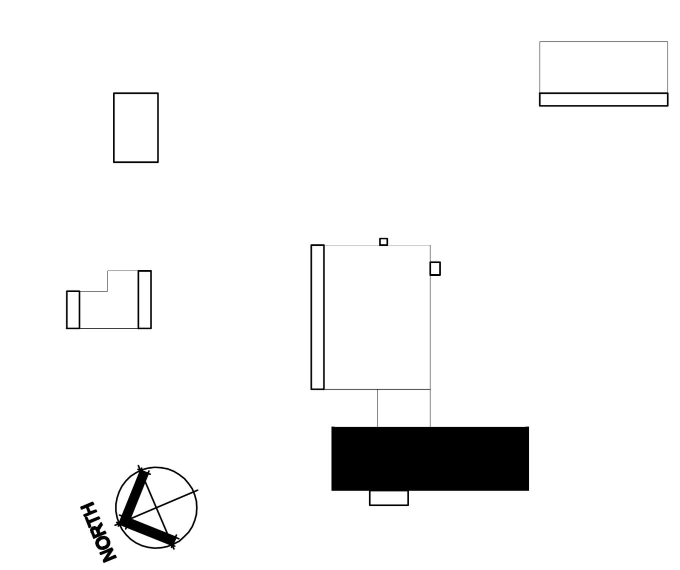

KEY PLAN

Texas Department of Transportation
125 E. 11th Street
Austin, Texas 78701-2483
(512) 416-2046
Copyright © 2005 Texas Department of Transportation

THIS DOCUMENT IS RELEASED FOR THE PURPOSE OF INFORMATION ONLY
NOT FOR REGULATORY APPROVAL, PERMITTING, OR CONSTRUCTION.

WACO AREA ENGINEER AND MAINTENANCE FACILITY
WACO, MCLENNAN COUNTY
WACO DISTRICT

Revisions

Drawn by: KAO/EE
Project No. CBC4704-00672
Date 05.21.2007
Sheet No.
A4.1
of 37 sheets

REFLECTED CEILING PLAN-OFFICE

NOTE: THIS DRAWING WAS CREATED FOR PRODUCTION ON 22" x 34" SHEET SIZE. DO NOT SCALE PRINTS.

CADFILE: T:\MNTFMD02FTW\CBC4704-00-837\02-77-4704000837\Acad\prototypical pdfs\waco\Acad\Arch\0672_A4_1.dwg Plotted: Fri. Aug. 07, 2009 @ 12:56 PM By: MBAZAN

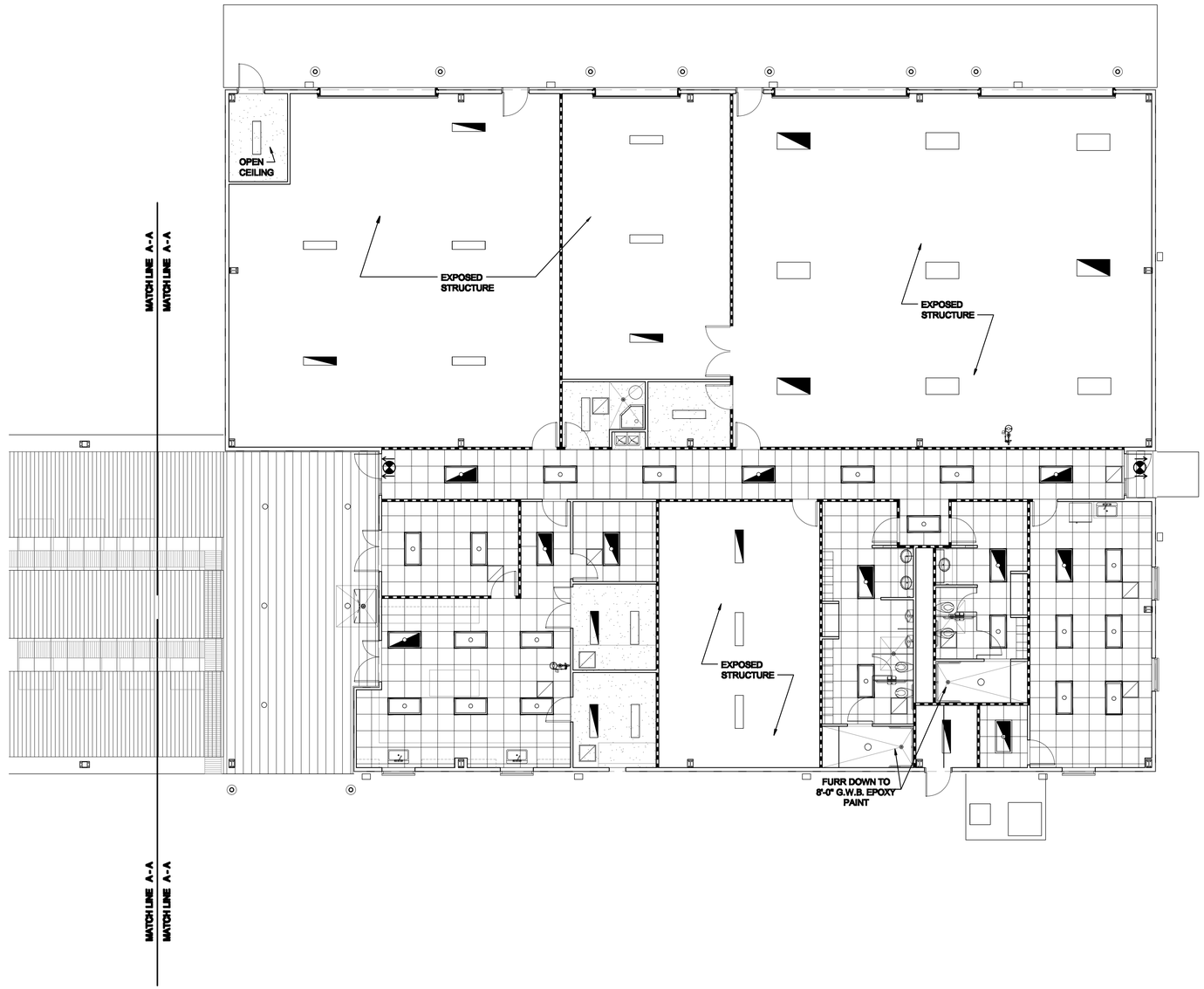

1 **REFLECTED CEILING PLAN - SHOP/LAB**
SCALE: 1/8" = 1'-0"

LEGEND

- RETURN AIR DIFFUSER
- SUPPLY AIR DIFFUSER
- LIGHT FIXTURE REF: ELEC.
- EMERGENCY LIGHT FIXTURE REF: ELEC.
- 2' X 2' SUSPENDED ACOUSTICAL CEILING GRID
- RECESSED LIGHT FIXTURE
- LIGHT FIXTURE REF: ELEC.
- EXIT LIGHT
- LIGHT FIXTURE REF: ELEC.
- GYP. BOARD

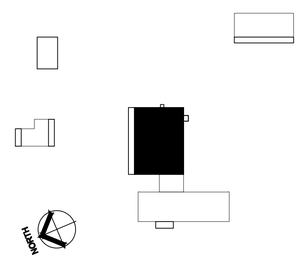

KEY PLAN

REFLECTED CEILING PLAN - LAB/SHOP

NOTE: THIS DRAWING WAS CREATED FOR PRODUCTION ON 22" x 34" SHEET SIZE. DO NOT SCALE PRINTS.

Texas Department of Transportation
125 E. 11th Street
Austin, Texas 78701-2483
(512) 416-3000
Copyright © 2005 Texas Department of Transportation

THIS DOCUMENT IS RELEASED FOR THE PURPOSE OF
INFORMATION ONLY
NOT FOR REGULATORY
APPROVAL, PERMITTING,
OR CONSTRUCTION.

WACO AREA ENGINEER AND MAINTENANCE FACILITY
WACO, MCLENNAN COUNTY
WACO DISTRICT

Revisions

Drawn by: KAO/EE
Project No. CBC4704-00672
Date 05.21.2007
Sheet No.

A4.2
of 37 sheets

CADFILE: T:\ANITA\DOGFTWC\BC4704-00-657\02-77-4704006572\Acad\proto\typical pdf\waco\Acad\Arch\06572_A4_2.dwg Plotted: Fri, Aug. 07, 2009 @ 12:57 PM By: MBAYAN

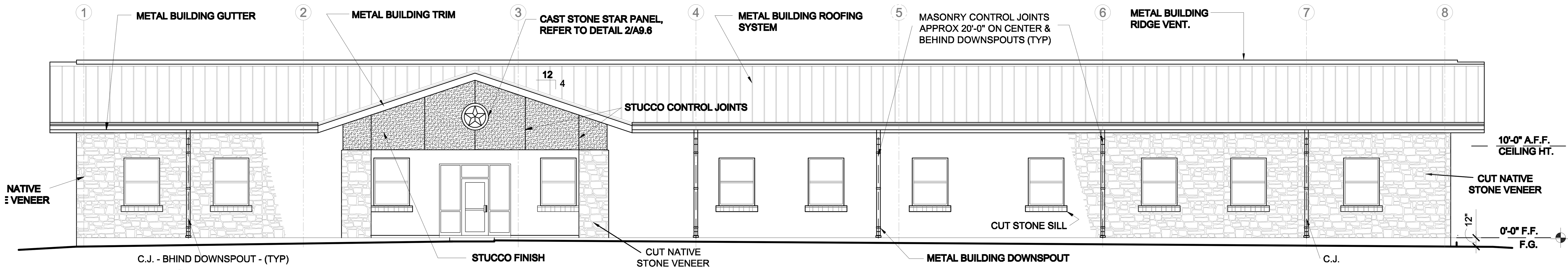

1 **SOUTH ELEVATION**
SCALE: 1/8"=1'-0"

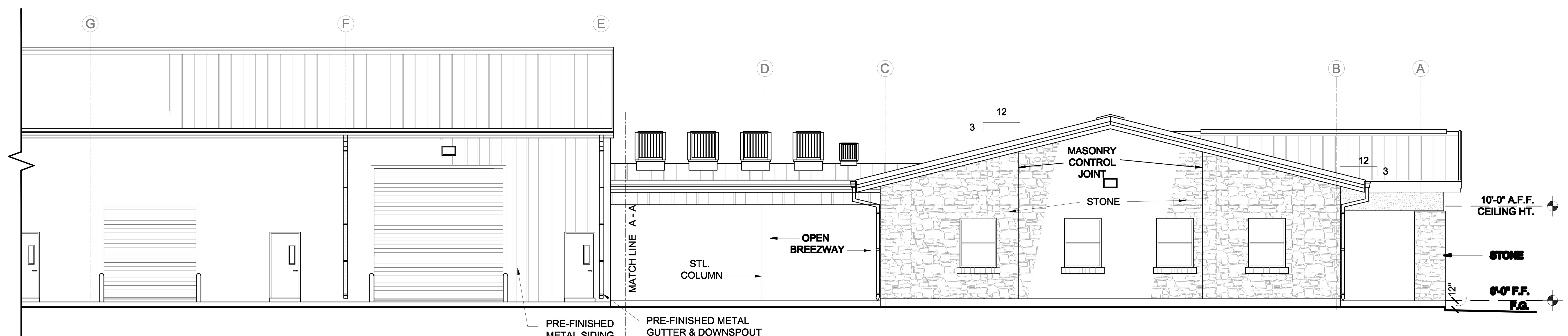

2 **WEST ELEVATION**
SCALE: 1/8"=1'-0"

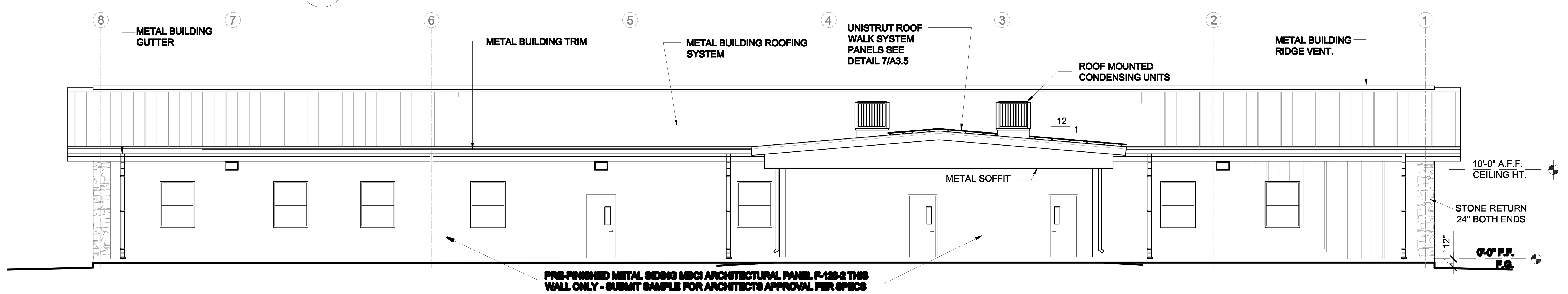

3 **NORTH ELEVATION**
SCALE: 1/8"=1'-0"

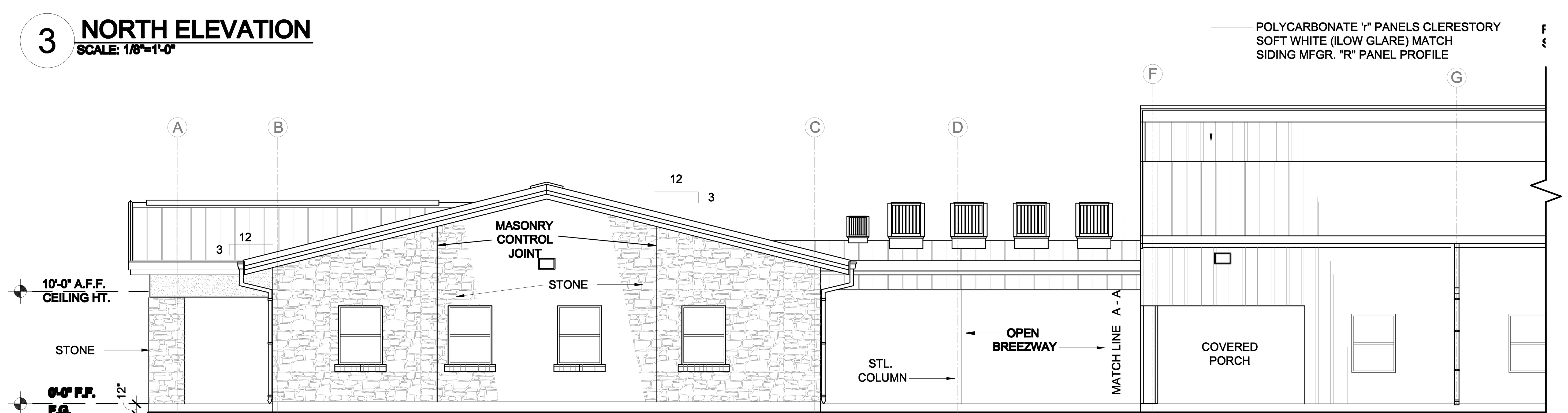

4 **EAST ELEVATION**
SCALE: 1/8"=1'-0"

CADFILE: T:\MNTFMD\02FTW\CBC4704-00-637\02-77-4704006377\Acad\prototypical pdfs\waco\Acad\Arch\0672_A5_1.dwg Plotted: Fri. Aug. 07, 2009 @ 12:57 PM By: MBAZAN

Texas Department of Transportation
125 E. 11th Street
Austin, Texas 78701-2483
(512) 416-3848
Copyright © 2005 Texas Department of Transportation

THIS DOCUMENT IS RELEASED FOR THE PURPOSE OF
INFORMATION ONLY
NOT FOR REGULATORY
APPROVAL, PERMITTING,
OR CONSTRUCTION.

WACO AREA ENGINEER AND MAINTENANCE FACILITY
WACO, MCLENNAN COUNTY
WACO DISTRICT

Revisions

Drawn by: KAO/EE
Project No. CBC4704-00672
Date 05.21.2007
Sheet No.
A5.1
of 37 sheets

EXTERIOR ELEVATIONS - OFFICE BUILDING

NOTE: THIS DRAWING WAS CREATED FOR PRODUCTION ON 22" x 34" SHEET SIZE. DO NOT SCALE PRINTS.

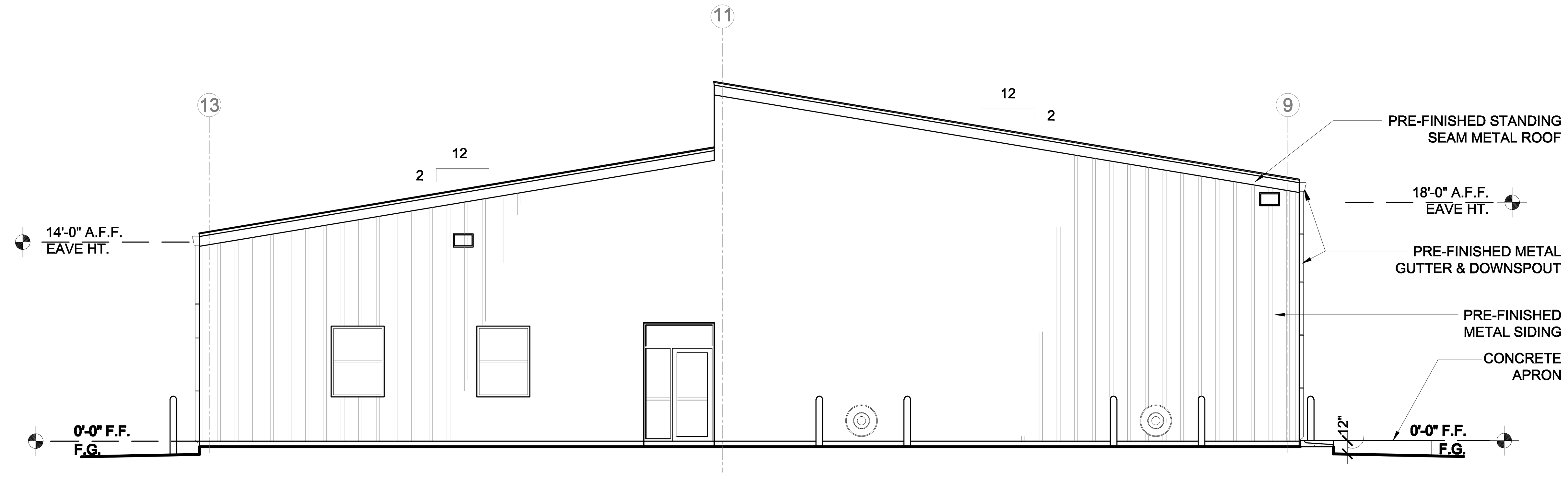

1 **NORTH ELEVATION**
SCALE: 1/8"=1'-0"

2 **WEST ELEVATION**
SCALE: 1/8"=1'-0"

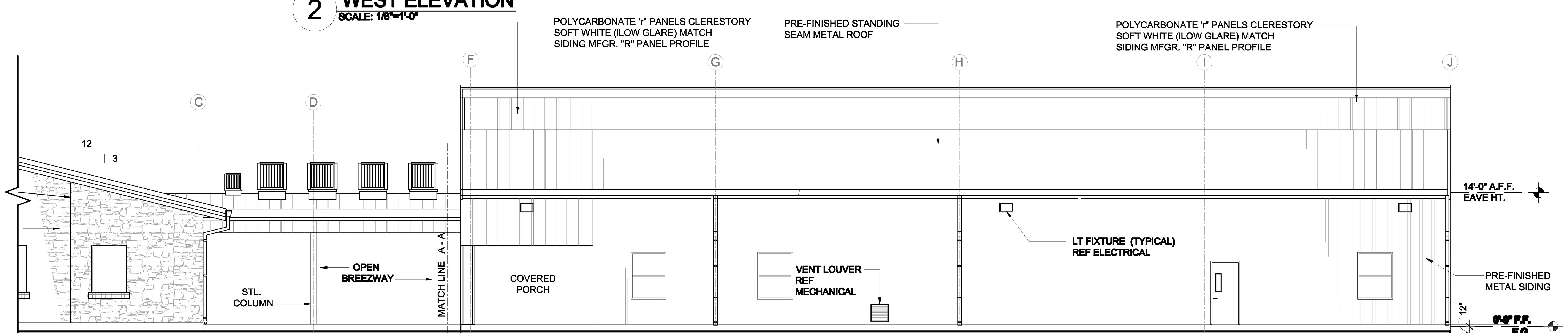

3 **EAST ELEVATION**
SCALE: 1/8"=1'-0"

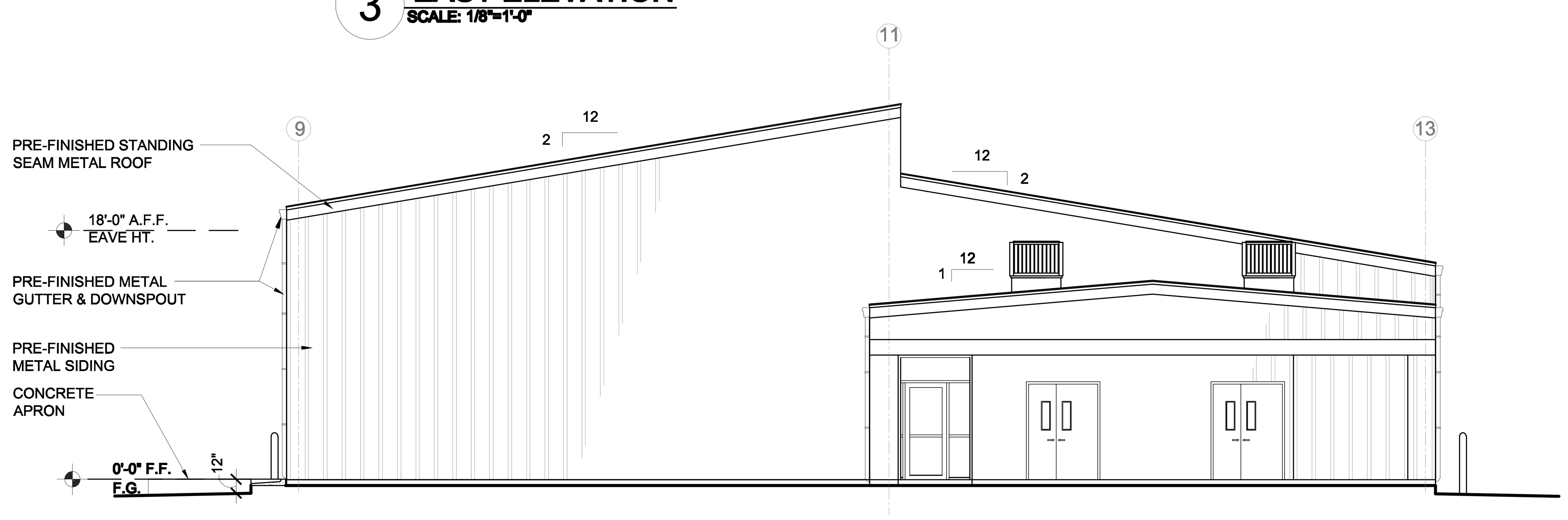

4 **SOUTH ELEVATION**
SCALE: 1/8"=1'-0"

CADFILE: T:\MNTFMD02FT\WC\BC4704-00-537\02-77-47040057\Acad\prototypical pdfs\waco\Acad\Arch\0672_A5_2.dwg Plotted: Fri. Aug. 07, 2009 @ 12:59 PM By: MBAZAN

Texas Department of Transportation
125 E. 11th Street
Austin, Texas 78701-2483
(512) 416-2040
Copyright © 2005 Texas Department of Transportation

THIS DOCUMENT IS RELEASED FOR THE PURPOSE OF INFORMATION ONLY
NOT FOR REGULATORY APPROVAL, PERMITTING, OR CONSTRUCTION.

WACO AREA ENGINEER AND MAINTENANCE FACILITY
WACO, MCLENNAN COUNTY
WACO DISTRICT

Revisions

Drawn by: KAO/EE
Project No. CBC4704-00672
Date 05.21.2007
Sheet No.
A5.2
of 37 sheets

EXTERIOR ELEVATIONS - LAB / SHOP BUILDING

NOTE: THIS DRAWING WAS CREATED FOR PRODUCTION ON 22" x 34" SHEET SIZE. DO NOT SCALE PRINTS.

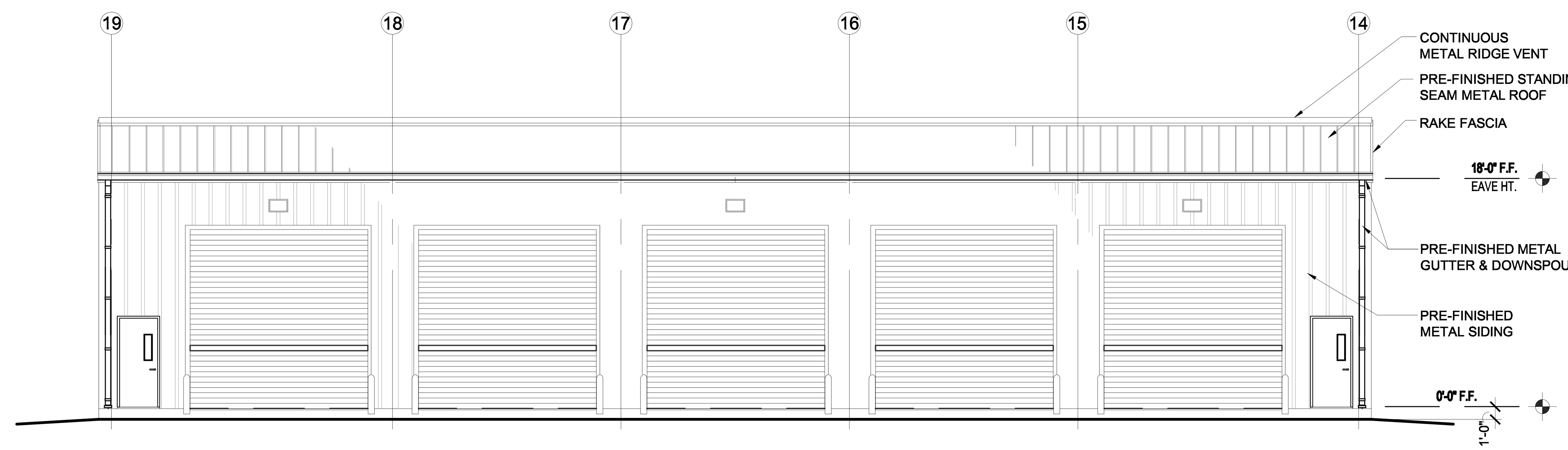

1 **FRONT ELEVATION**
SCALE: 1/8"=1'-0"

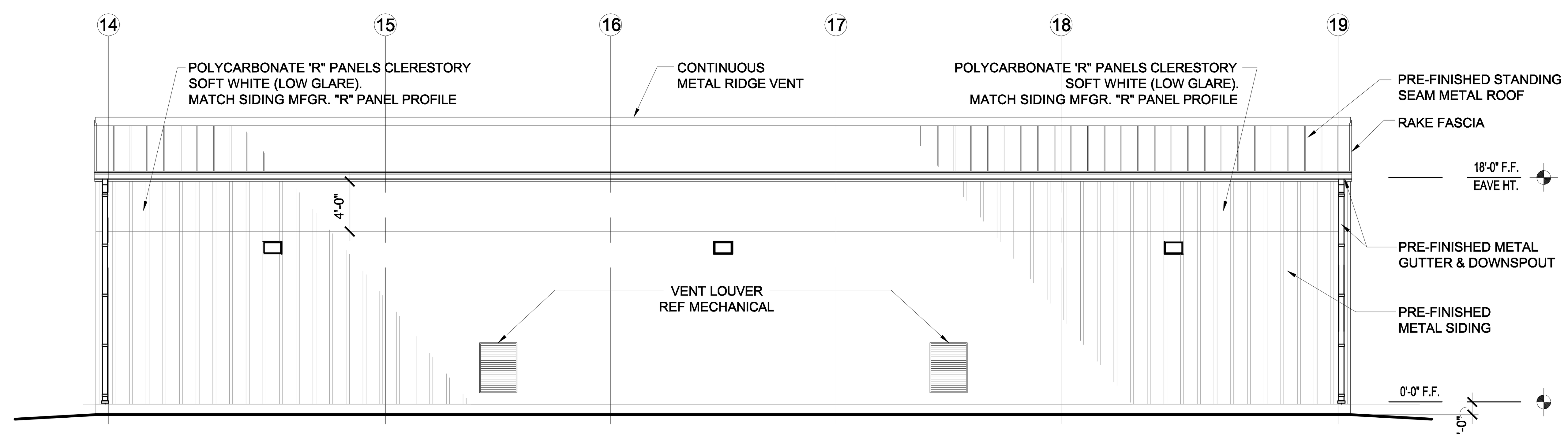

2 **REAR ELEVATION**
SCALE: 1/8"=1'-0"

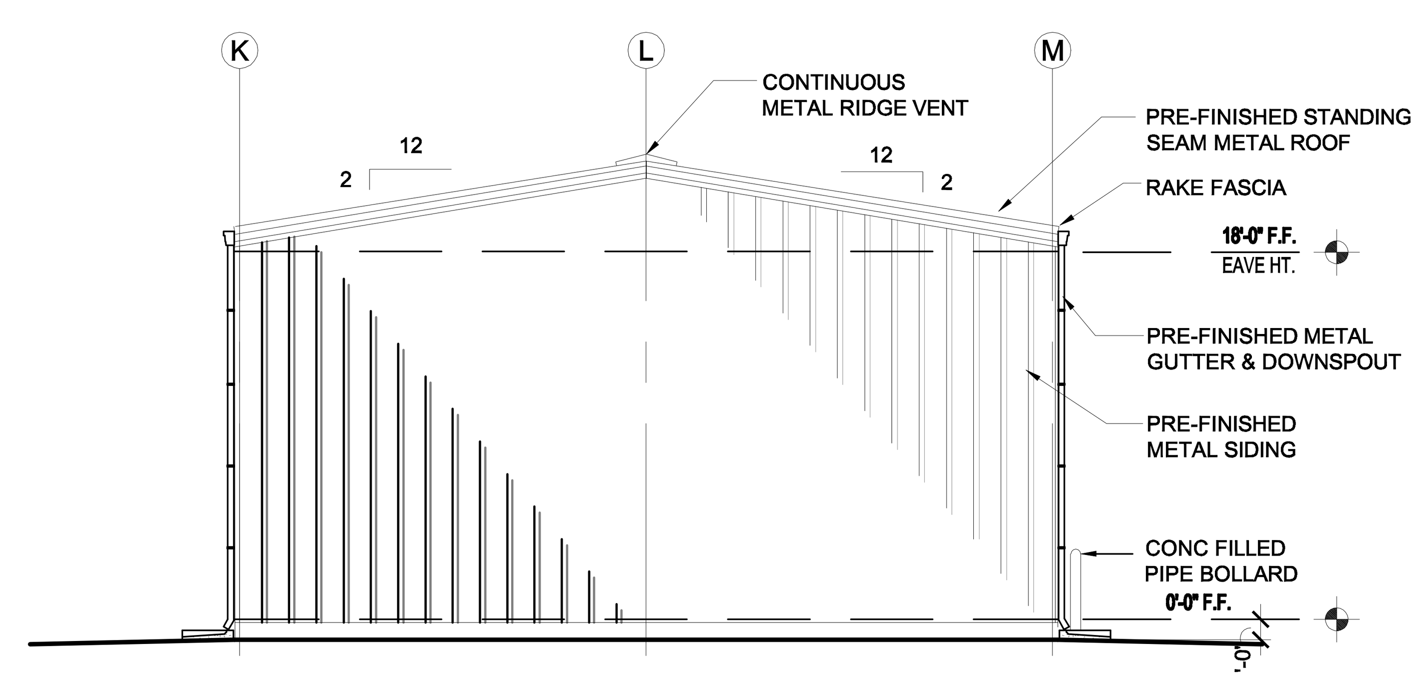

3 **SIDE ELEVATION**
SCALE: 1/8"=1'-0"

CADFILE: T:\MNTFMD02FTW\CBC4704-00-837\02-77-470400837\Acad\prototypical pdfs\waco\Acad\Arch\0672_A5_3.dwg Plotted: Fri. Aug. 07, 2009 @ 12:59 PM By: MBAZAN

Texas Department of Transportation
125 E. 11th Street
Austin, Texas 78701-2483
(512) 416-3848
Copyright © 2005 Texas Department of Transportation

THIS DOCUMENT IS RELEASED FOR THE PURPOSE OF
INFORMATION ONLY
NOT FOR REGULATORY
APPROVAL, PERMITTING,
OR CONSTRUCTION.

WACO AREA ENGINEER AND MAINTENANCE FACILITY
WACO, MCLENNAN COUNTY
WACO DISTRICT

Revisions

Drawn by:
KAO/AV
Project No.
CBC4704-00672
Date
05.21.2007
Sheet No.
A5.3
of 37 sheets

EXTERIOR ELEVATIONS - VEHICLE STORAGE

NOTE: THIS DRAWING WAS CREATED FOR PRODUCTION ON 22" x 34" SHEET SIZE. DO NOT SCALE PRINTS.

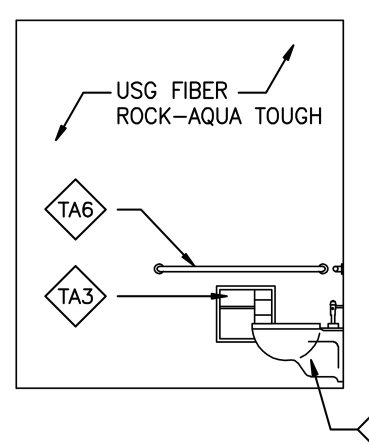

13 WOMEN SCALE: 1/4" = 1'-0"

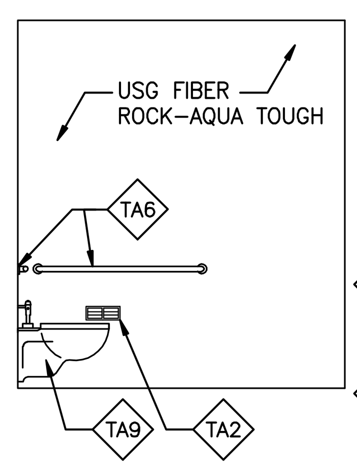

12 MEN SCALE: 1/4" = 1'-0"

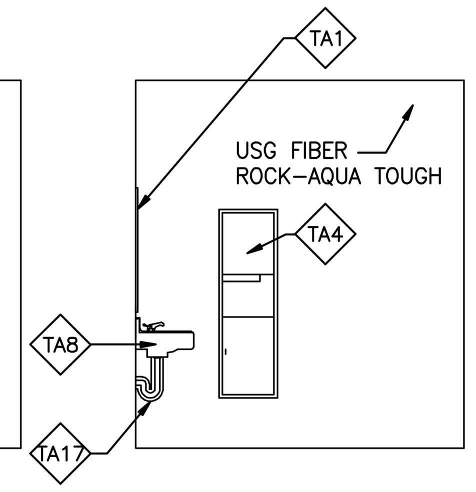

11 WOMEN SCALE: 1/4" = 1'-0"

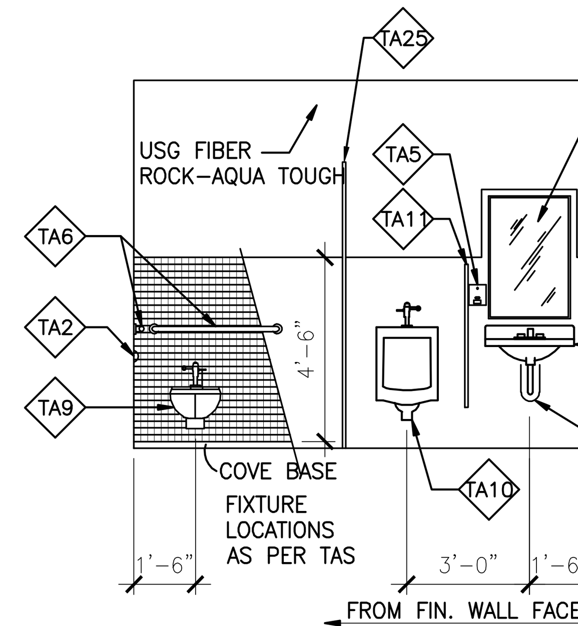

10 MEN SCALE: 1/4" = 1'-0"

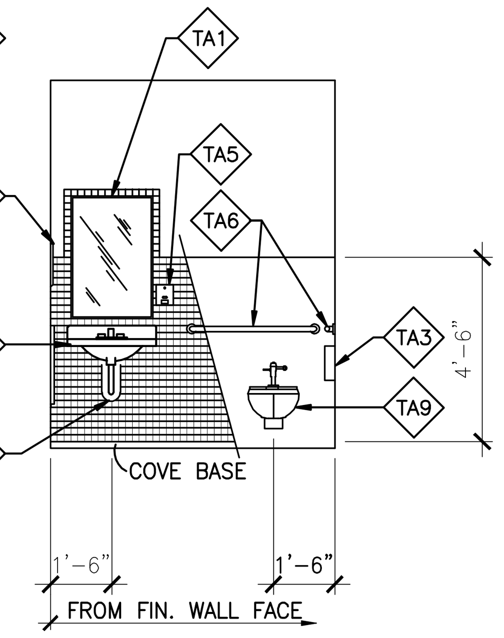

9 WOMEN SCALE: 1/4" = 1'-0"

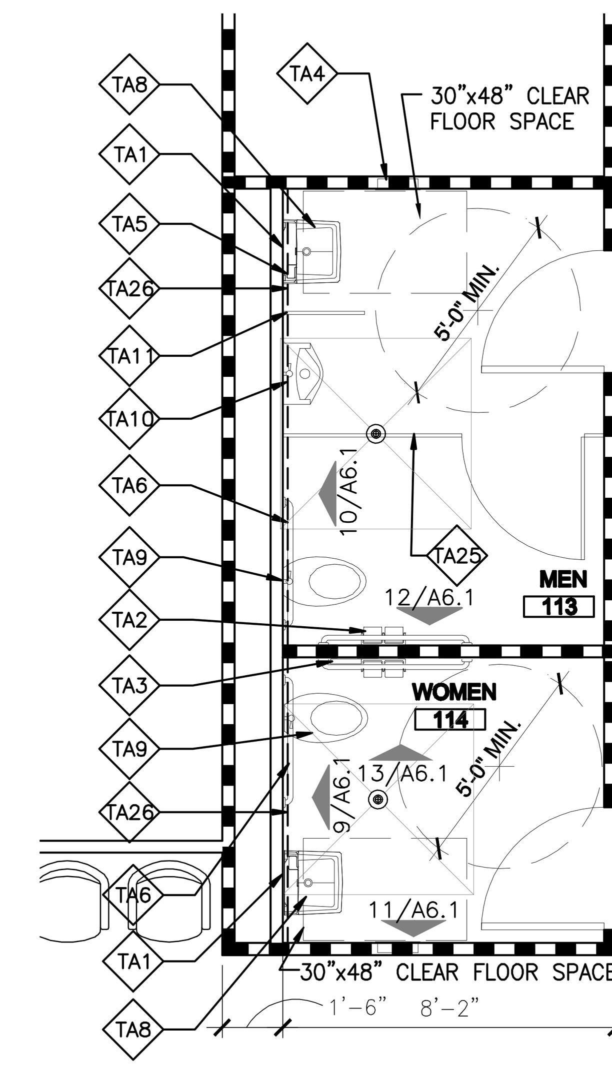

2 ENLARGED FLOOR PLAN SCALE: 1/4" = 1'-0"

NOTE: INSTALL PLUMBING PER ADA & TAS COMPLIANCE. REFER TO SHEET G1.2 FOR ADA MOUNTING HEIGHTS

TOILET ACCESSORIES SCHEDULE / KEY NOTES

TA1 – 24" X 36" MIRROR. BOTTOM EDGE MOUNTED 40" A.F.F.
TA2 – DOUBLE ROLL TOILET TISSUE DISPENSER
TA3 – SANITARY NAPKIN DISPOSAL/TOILET TISSUE DISPENSER
TA4 – SURFACE MOUNTED PAPER TOWEL DISPENSER – 4'-2" A.F.F. TO DISPENSER OPENING
TA5 – SOAP DISPENSER @ 44" AFF
TA6 – TOILET GRAB BARS – 34" A.F.F. 36" LONG AT REAR, 42" LONG ON SIDE LOCATED 12" MAX FROM REAR WALL.
TA7 – PROVIDE TILE SPACERS BEHIND MIRROR, WITH TILE BOARDER AROUND MIRROR.
TA8 – WALL MOUNTED LAVATORY
TA9 – WALL MOUNTED WATER CLOSET
TA10– WALL MOUNTED URINAL
TA11– URINAL SCREEN – 21" DEEP
TA12– CURTAIN AND ROD
TA13– 24"x 60" FIXED DRESSING BENCH ON 4 PEDESTALS
TA14– 12" DOUBLE TIER LOCKERS ON 4" CONCRETE CURB
TA15– STAINLESS STEEL CORNER GUARDS 5'-0" HT.
TA16– CLOTHES HOOK @ 48" AFF MAX.
TA17– PROTECTIVE COVERS AT PIPES
TA18– SHOWER GRAB BAR @ 34" A. F. F.
TA19– 4" SPLASH GUARD
TA20– COUNTER MOUNTED LAVATORY
TA21– PLASTIC LAMINATE COUNTER WITH RECESSED LAVATORY WITH PLUMBING APRON
TA22– 24"x 48" FIXED DRESSING BENCH ON 4 PEDESTALS
TA23– 72" X 36" MIRROR. BOTTOM EDGE MOUNTED 40" A.F.F.
TA24– 60" X 36" MIRROR. BOTTOM EDGE MOUNTED 40" A.F.F.
TA25– TOILET PARTITIONS
TA26– LIMITS OF CERAMIC TILE

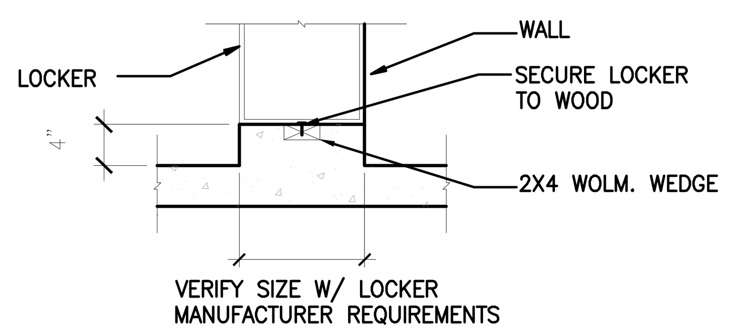

14 BASE AT LOCKERS SCALE: 3/4" = 1'-0"

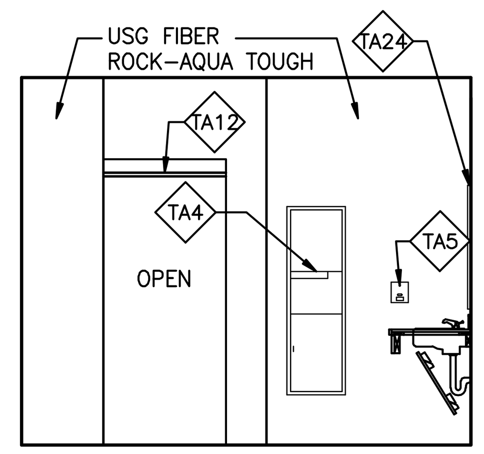

8 WOMEN - ELEVATION SCALE: 1/4" = 1'-0"

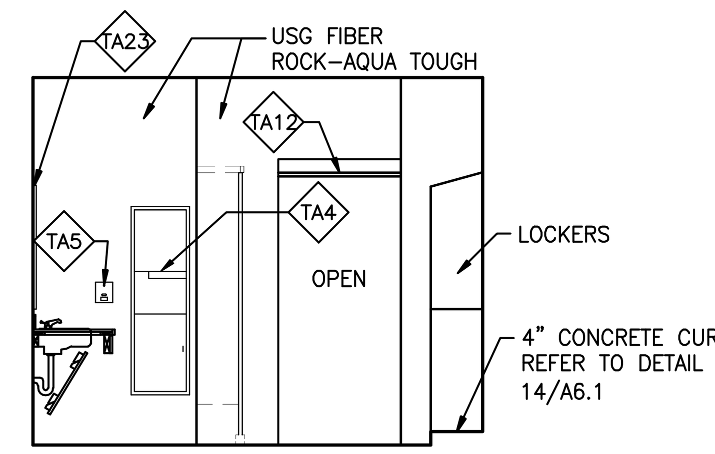

7 MEN - ELEVATION SCALE: 1/4" = 1'-0"

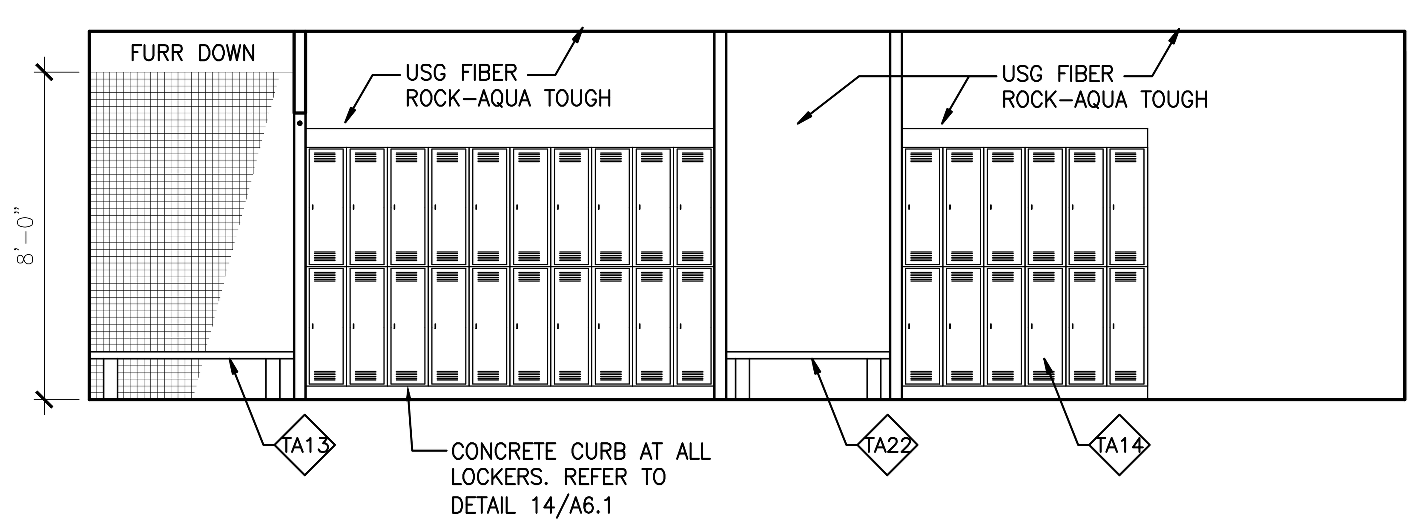

6 MEN - ELEVATION SCALE: 1/4" = 1'-0"

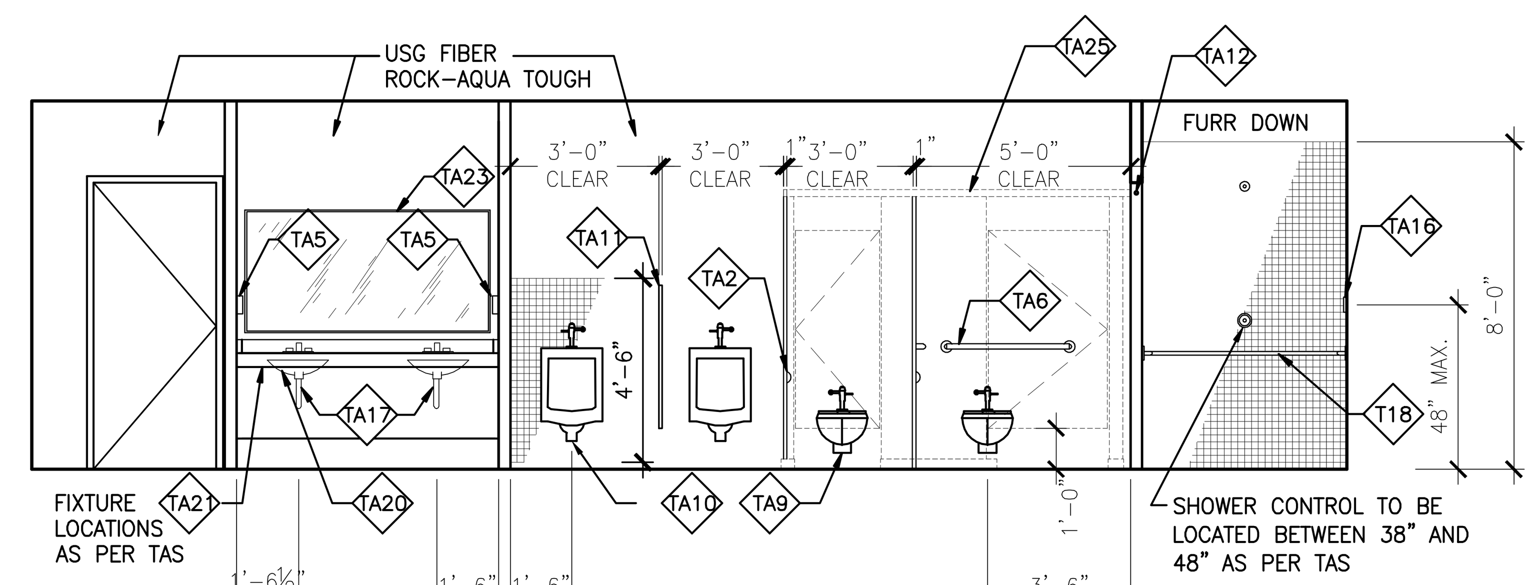

5 MEN - ELEVATION SCALE: 1/4" = 1'-0"

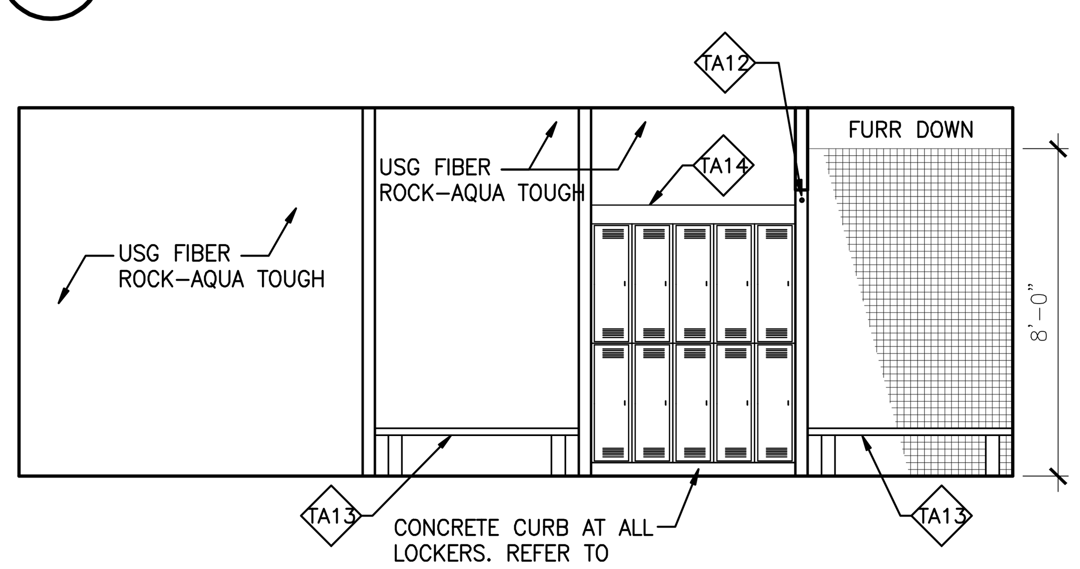

4 WOMEN - ELEVATION SCALE: 1/4" = 1'-0"

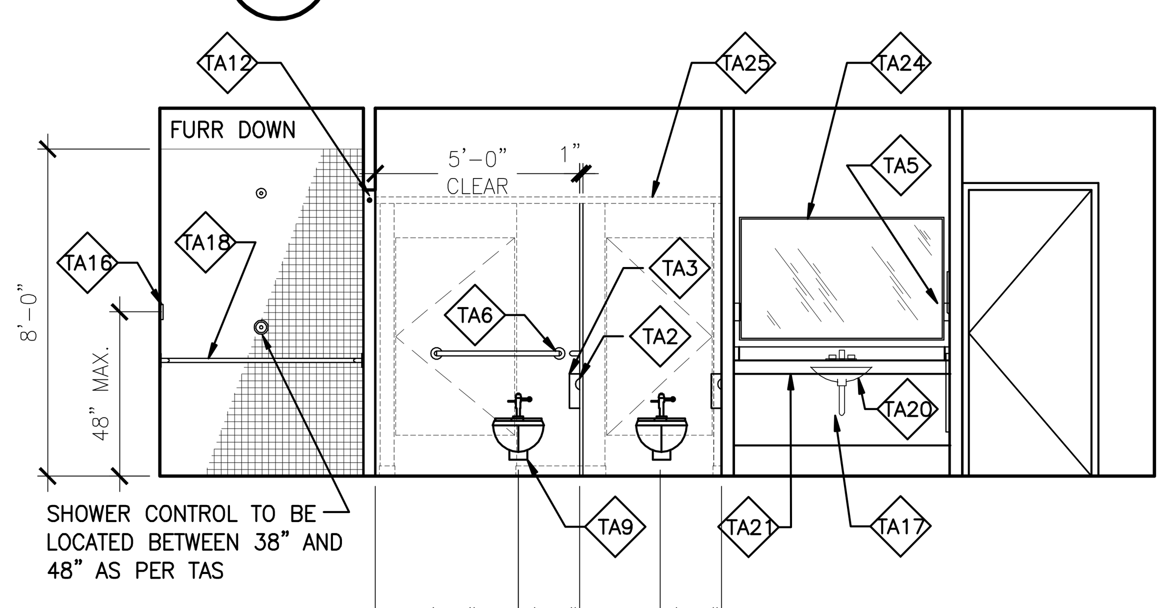

3 WOMEN - ELEVATION SCALE: 1/4" = 1'-0"

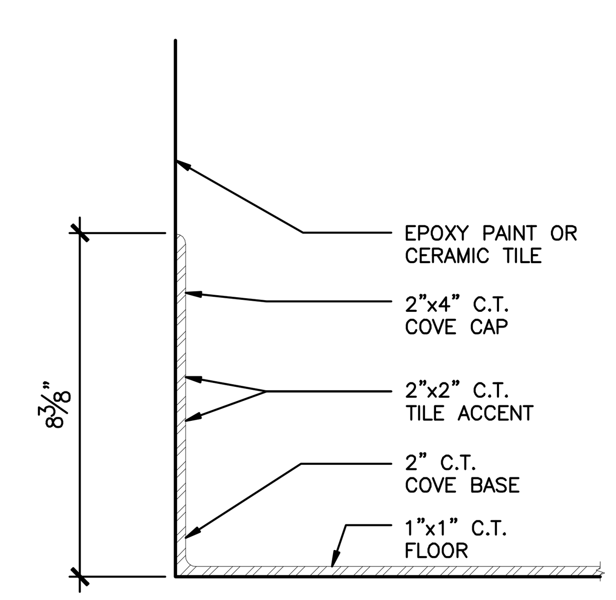

15 C.T. COVE BASE SCALE: 3" = 1'-0"

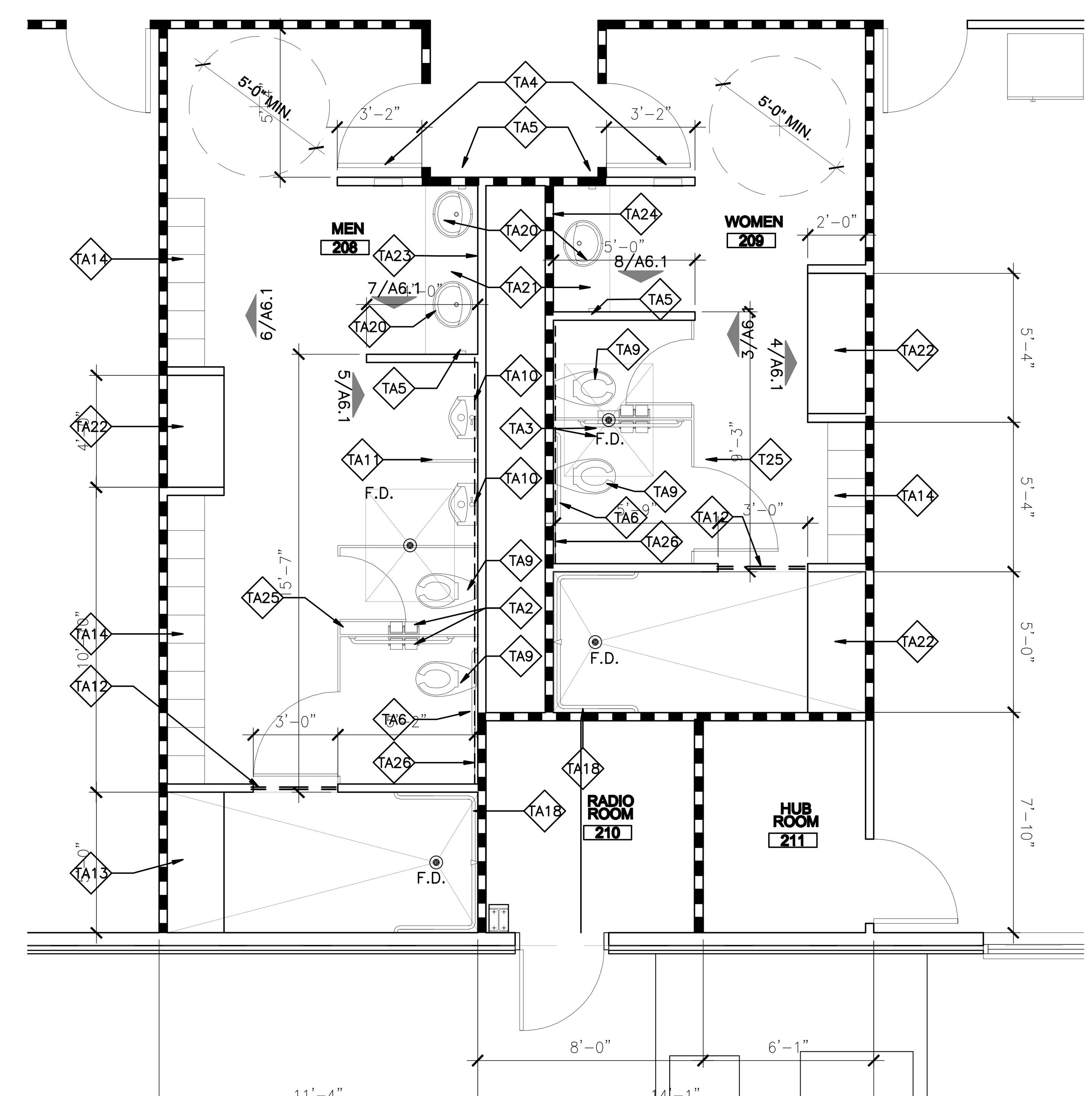

1 ENLARGED FLOOR PLAN SCALE: 1/4" = 1'-0"

Texas Department of Transportation
125 E. 11th Street
Austin, Texas 78701-2483
(512) 416-2000
Copyright © 2005 Texas Department of Transportation

THIS DOCUMENT IS RELEASED FOR THE PURPOSE OF INFORMATION ONLY
NOT FOR REGULATORY APPROVAL, PERMITTING, OR CONSTRUCTION.

WACO AREA ENGINEER AND MAINTENANCE FACILITY
WACO, MCLENNAN COUNTY
WACO DISTRICT

Revisions

Drawn by: KAO/EE
Project No. CBC4704-00672
Date 05.21.2007
Sheet No. **A6.1** of 37 sheets

TOILETS - PLANS & ELEVATIONS

NOTE: THIS DRAWING WAS CREATED FOR PRODUCTION ON 22" x 34" SHEET SIZE. DO NOT SCALE PRINTS.

CADFILE: T:\MNT\MD02\TWC\BC4704-00-637\02-77-47040006377\cad\project pdf\waco\Acad\Arch\0672_A6_1.dwg Plotted: Fri, Aug. 07, 2009 @ 1:50 PM By: MBAZAN

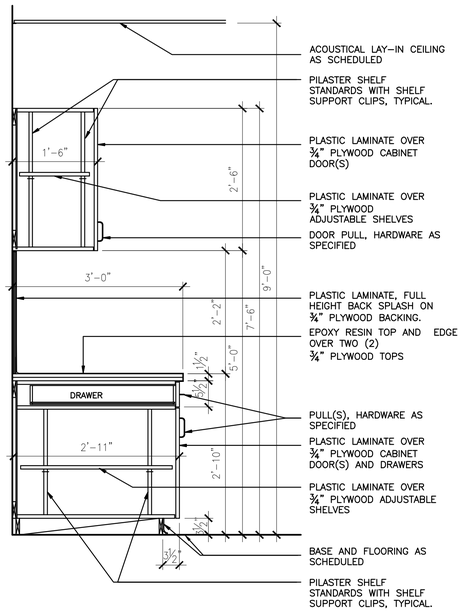

11 **SECTION** SCALE: 3/4" = 1'-0"

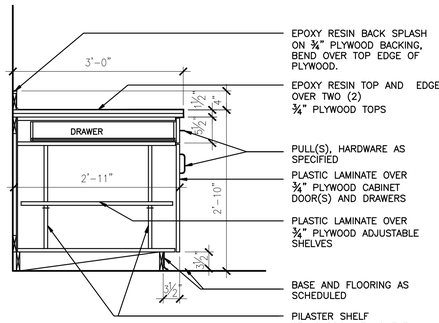

10 **SECTION** SCALE: 3/4" = 1'-0"

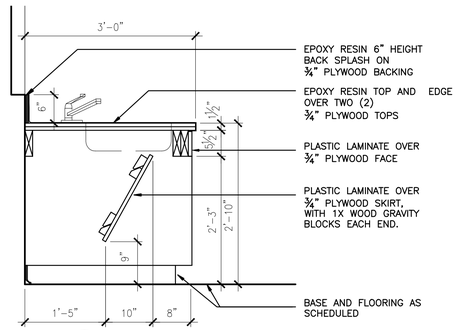

9 **SECTION** SCALE: 3/4" = 1'-0"

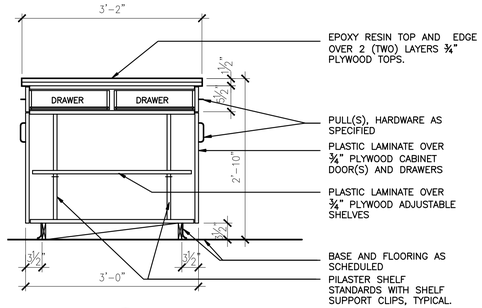

8 **SECTION** SCALE: 3/4" = 1'-0"

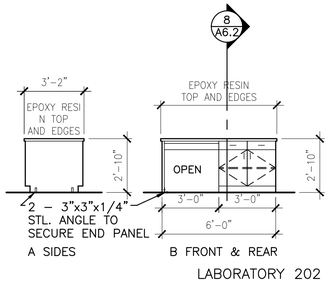

LABORATORY 202

7 **ELEVATION** SCALE: 1/4" = 1'-0"

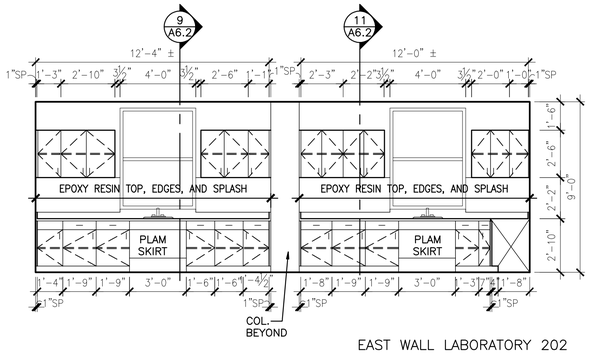

EAST WALL LABORATORY 202

6 **ELEVATION** SCALE: 1/4" = 1'-0"

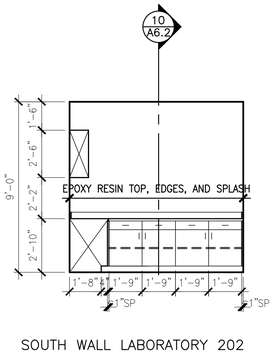

SOUTH WALL LABORATORY 202

5 **ELEVATION** SCALE: 1/4" = 1'-0"

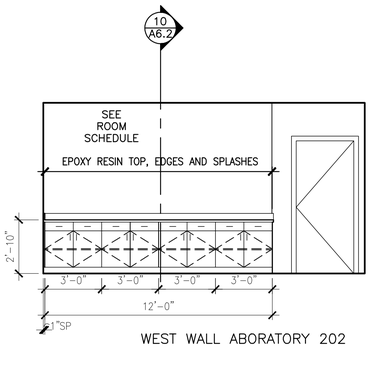

WEST WALL ABORATORY 202

4 **ELEVATION** SCALE: 1/4" = 1'-0"

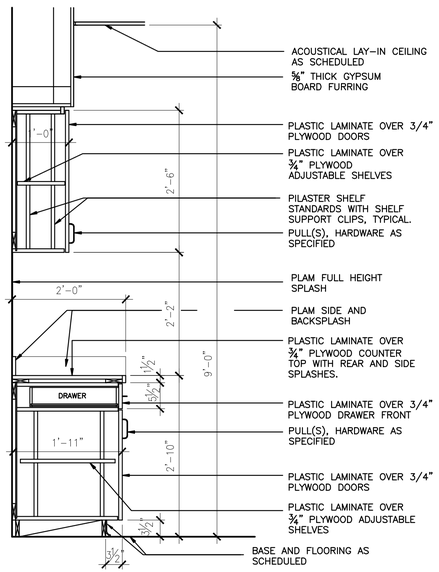

13 **SECTION** SCALE: 3/4" = 1'-0"

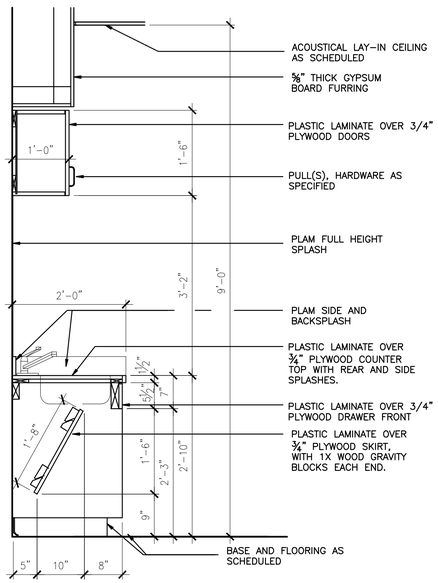

12 **SECTION** SCALE: 3/4" = 1'-0"

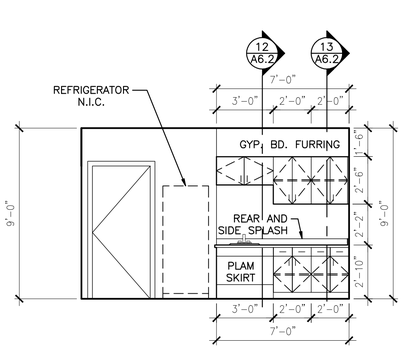

CREW RM 212

3 **ELEVATION** SCALE: 1/4" = 1'-0"

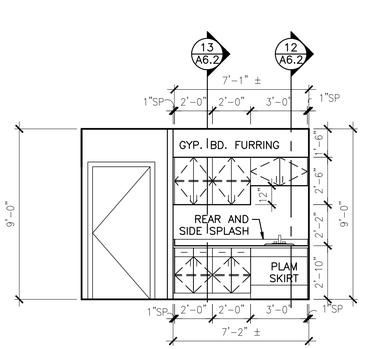

CORRIDOR 106

2 **ELEVATION** SCALE: 1/4" = 1'-0"

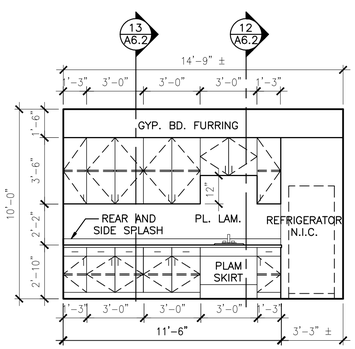

MEETING ROOM 115

1 **ELEVATION** SCALE: 1/4" = 1'-0"

GENERAL NOTES:

1. PROVIDE 2 ROWS OF 2X6 FIRE–RETARDANT WOOD BLOCKING FOR EACH UPPER CABINET.
2. SEE MILLWORK ELEVATIONS FOR NUMBER OF ADJUSTABLE SHELVES.
3. PLASTIC LAMINATE FINISH AT THE INTERIOR SURFACES OF ALL CABINETS AND SHELVES SURFACES.
4. REFER TO SHEET A6.3 FOR MILLWORK DETAILS.

MILLWORK ELEVATIONS

Texas Department of Transportation
125 E. 11th Street
Austin, Texas 78701-2483
(512) 416-2000

Copyright © 2005 Texas Department of Transportation

THIS DOCUMENT IS RELEASED FOR THE PURPOSE OF INFORMATION ONLY NOT FOR REGULATORY APPROVAL, PERMITTING, OR CONSTRUCTION.

WACO AREA ENGINEER AND MAINTENANCE FACILITY
WACO, MCLENNAN COUNTY
WACO DISTRICT

Revisions

Drawn by: JOT
Project No. CBC4704-00672
Date 05.21.2007
Sheet No.

A6.2
of 37 sheets

NOTE: THIS DRAWING WAS CREATED FOR PRODUCTION ON 22" x 34" SHEET SIZE. DO NOT SCALE PRINTS.

CADFILE: T:\ANTRAK\DGN\TWC\CBC4704-00-65\103-77-47\400837\Acad\proto\dyn\sht pdf\Iresco\Acad\Arch\05172_A6_2.dwg Plotted: Fri, Aug. 07, 2009 @ 1:30 PM By: MBAZAN

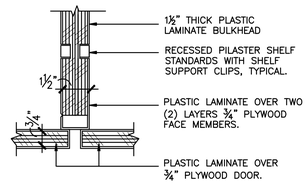

9 ENLARGED DETAIL
SCALE: 3" = 1'-0"

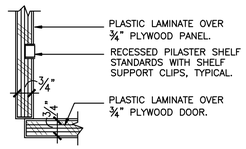

8 ENLARGED DETAIL
SCALE: 3" = 1'-0"

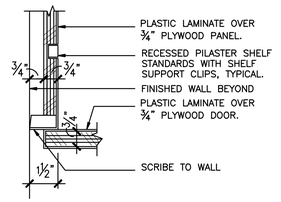

7 ENLARGED DETAIL
SCALE: 3" = 1'-0"

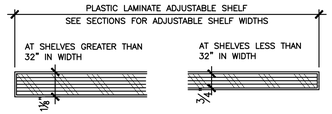

6 ENLARGED DETAIL
SCALE: 3" = 1'-0"

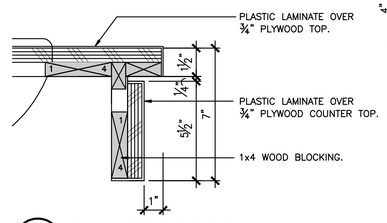

5 ENLARGED DETAIL
SCALE: 3" = 1'-0"

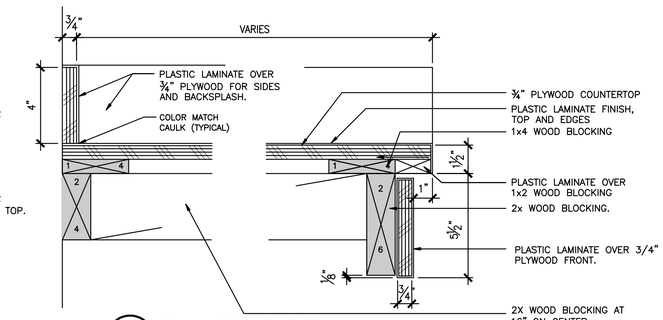

4 ENLARGED DETAIL
SCALE: 3" = 1'-0"

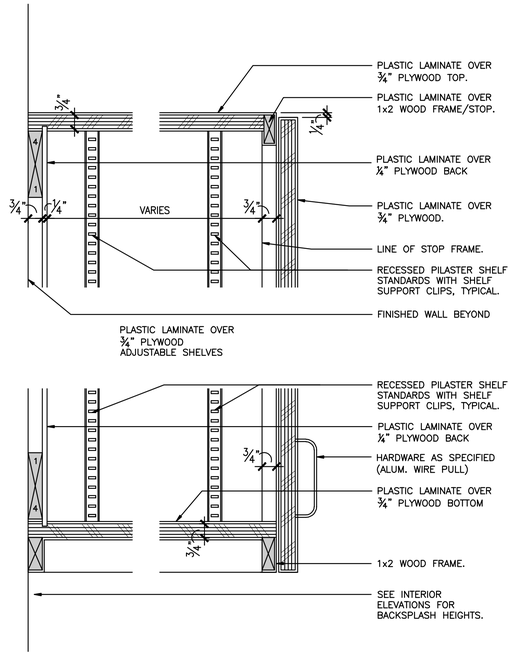

3 ENLARGED DETAIL
SCALE: 3" = 1'-0"

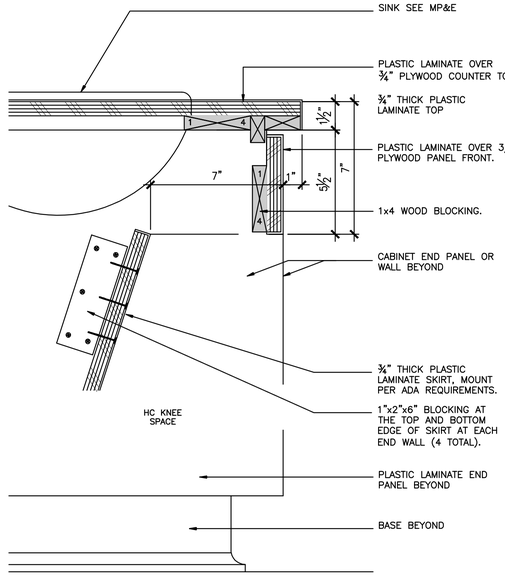

2 ENLARGED DETAIL
SCALE: 3" = 1'-0"

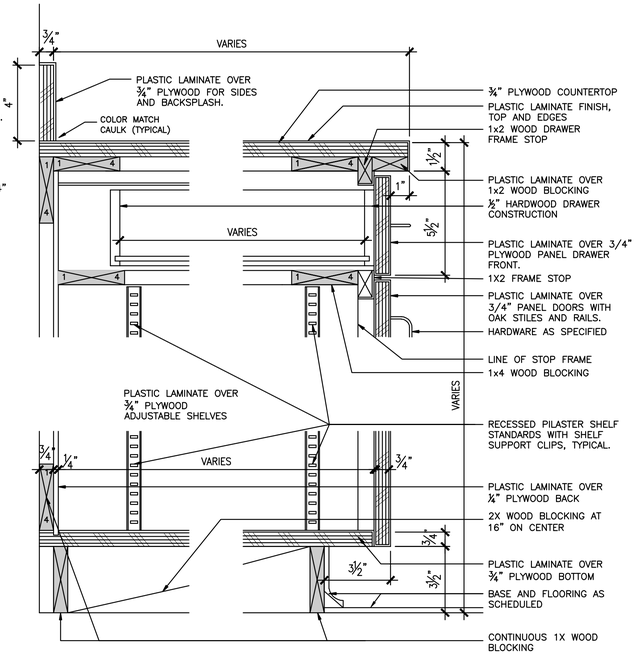

1 ENLARGED DETAIL
SCALE: 3" = 1'-0"

MILLWORK DETAILS

NOTE: THIS DRAWING WAS CREATED FOR PRODUCTION ON 22" x 34" SHEET SIZE. DO NOT SCALE PRINTS.

Texas Department of Transportation
125 E. 11th Street
Austin, Texas 78701-2483
(512) 416-3000

Copyright © 2005 Texas Department of Transportation

THIS DOCUMENT IS RELEASED FOR THE PURPOSE OF
INFORMATION ONLY
NOT FOR REGULATORY
APPROVAL, PERMITTING,
OR CONSTRUCTION.

WACO AREA ENGINEER AND MAINTENANCE FACILITY
WACO, MCLENNAN COUNTY
WACO DISTRICT

Revisions

Drawn by: JOT
Project No. CBC4704-00672
Date 05.21.2007
Sheet No. A6.3
of 37 **sheets**

CADFILE: T:\MNTFM\DOGFTWCBC\4704-00-65\102-77-4704006537\Acad\proto\dyn\set pdf\sheets\Acad\Arch\N5572_A6_3.dwg Pltdtd: Fri, Aug. 07, 2009 @ 1:01 PM By: MBAYZAN

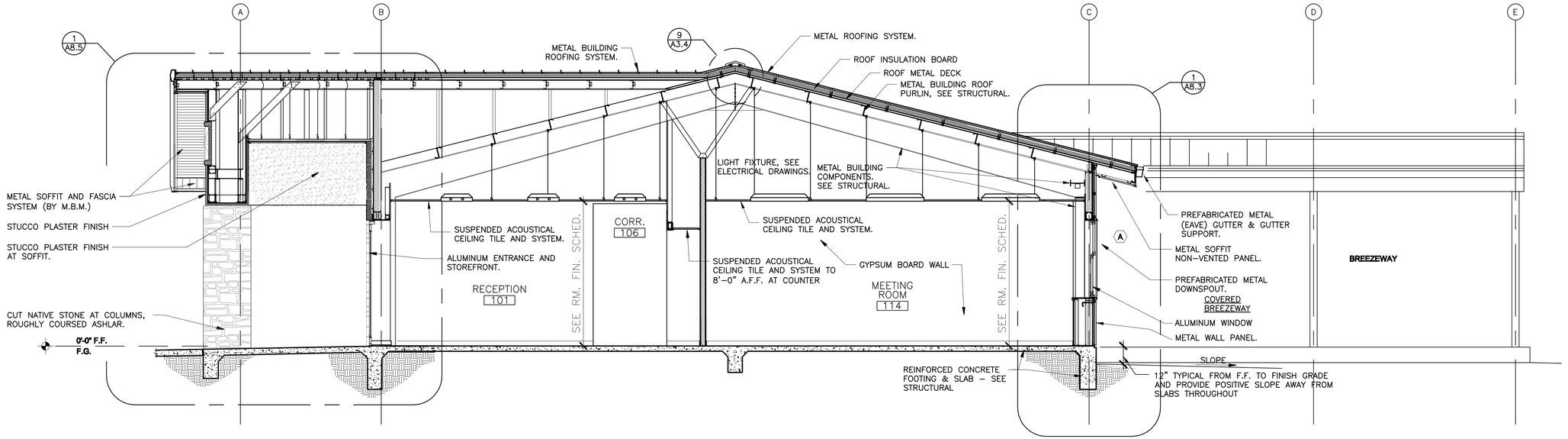

2 BUILDING SECTION - OFFICE
SCALE: 1/4" = 1'-0"

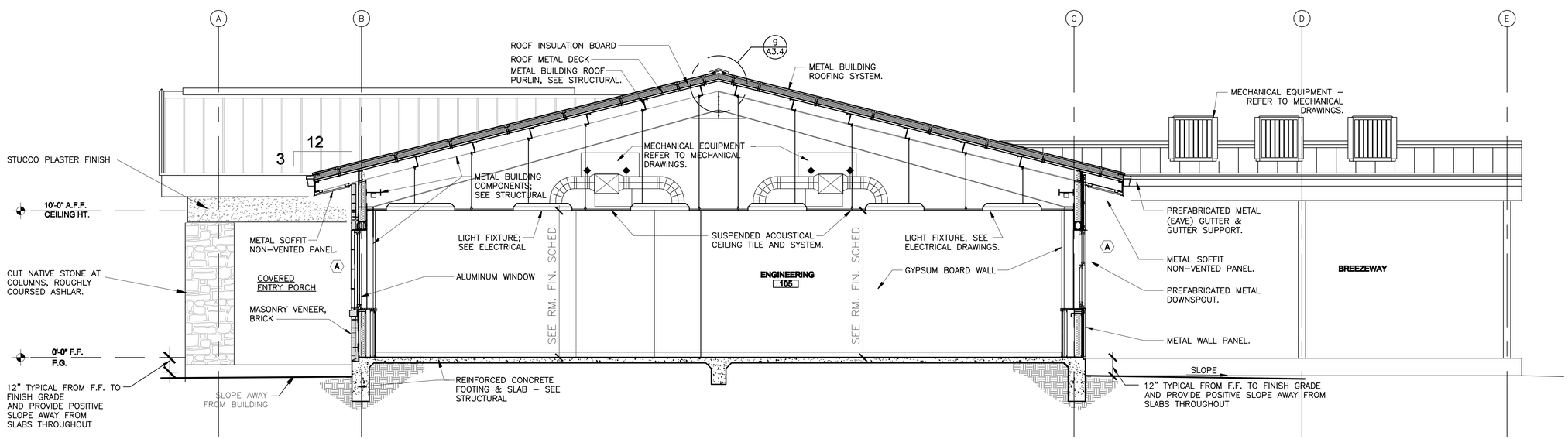

1 BUILDING SECTION - OFFICE
SCALE: 1/4" = 1'-0"

BUILDING SECTIONS - OFFICE

NOTE: THIS DRAWING WAS CREATED FOR PRODUCTION ON 22" x 34" SHEET SIZE. DO NOT SCALE PRINTS.

Texas Department of Transportation
125 E. 11th Street
Austin, Texas 78701-2483
(512) 416-3000

Copyright © 2005 Texas Department of Transportation

THIS DOCUMENT IS RELEASED FOR THE PURPOSE OF
INFORMATION ONLY
NOT FOR REGULATORY
APPROVAL, PERMITTING,
OR CONSTRUCTION.

WACO AREA ENGINEER AND MAINTENANCE FACILITY
WACO, MCLENNAN COUNTY
WACO DISTRICT

Revisions

Drawn by:
KAO/AV
Project No.
CBC4704-00672
Date
05.21.2007
Sheet No.

A7.1
of 37 sheets

CADFILE: T:\MAINTA\D0267TWC\BC4704-00-00\703-77-4704D0267\Acad\projects\typical pdf\waco\Acad\Arch\0672_A7_1.dwg Plotted: Fri, Aug. 07, 2009 @ 1:01 PM By: MBAZAN

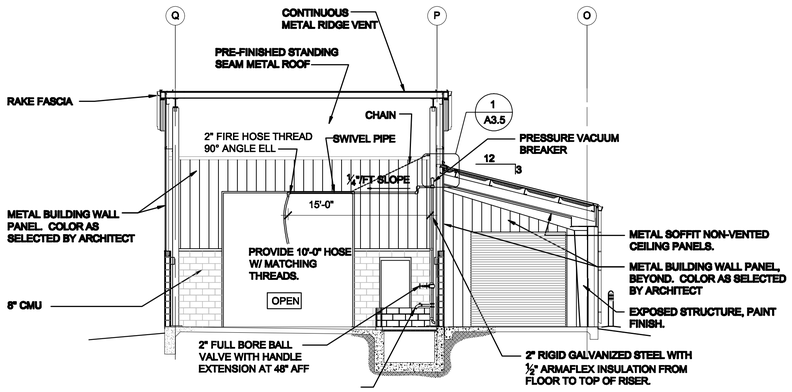

3 BUILDING SECTION AT WASH BAY
SCALE: 1/8" = 1'-0"

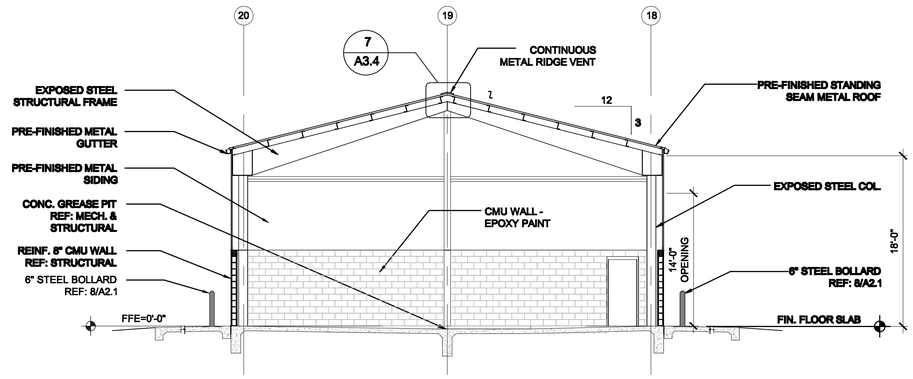

2 BUILDING SECTION AT WASH BAY
SCALE: 1/8" = 1'-0"

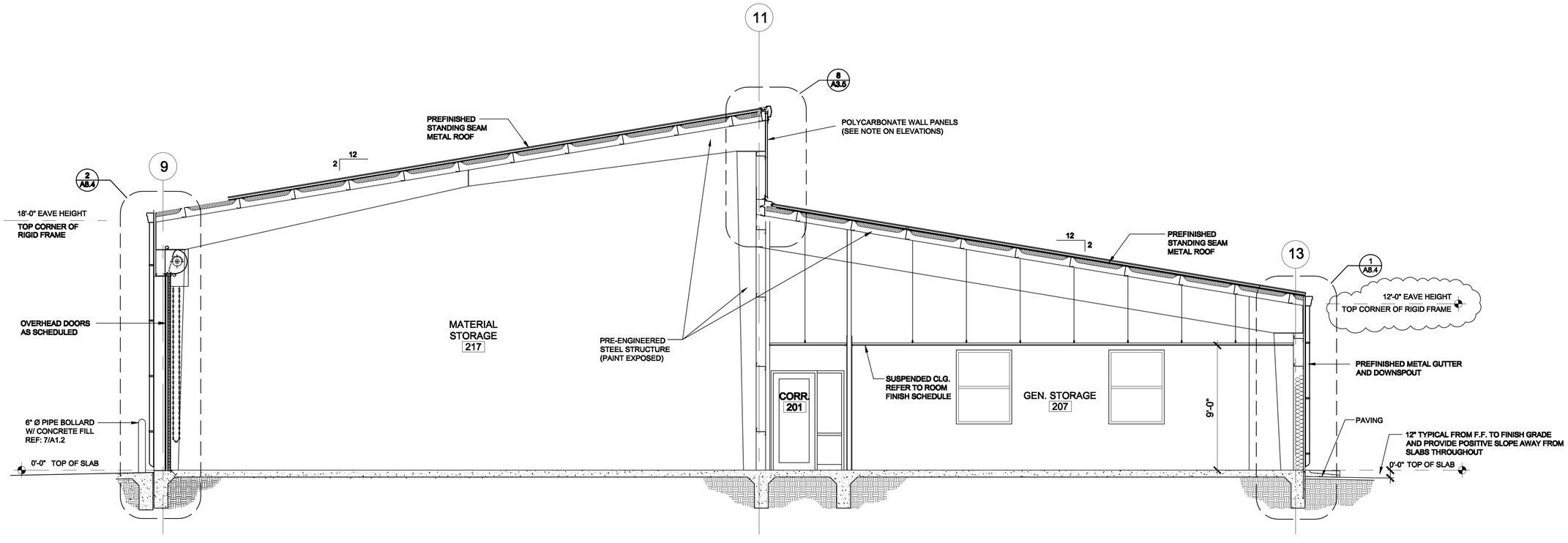

1 BUILDING SECTION - LAB / SHOP
SCALE: 1/4" = 1'-0"

BUILDING SECTIONS - LAB / SHOP & WASH BAY

NOTE: THIS DRAWING WAS CREATED FOR PRODUCTION ON 22" x 34" SHEET SIZE. DO NOT SCALE PRINTS.

Texas Department of Transportation
125 E. 11th Street
Austin, Texas 78701-2483
(512) 416-3000

Copyright © 2005 Texas Department of Transportation

THIS DOCUMENT IS RELEASED FOR THE PURPOSE OF
INFORMATION ONLY
NOT FOR REGULATORY APPROVAL, PERMITTING, OR CONSTRUCTION.

WACO AREA ENGINEER AND MAINTENANCE FACILITY
WACO, MCLENNAN COUNTY
WACO DISTRICT

Revisions
1 08/30/07

Drawn by: KAO/EE
Project No. CBC4704-00672
Date 05.21.2007
Sheet No.

A7.2
of 37 sheets

CADFILE: T:\ANITA\ROOF\TWC\CBC4704-00-657\02-77-4704065\7\Acad\proto\plotsl pdf\texas\Acad\Arch\0672_A7_2.dwg Plotted: Fri, Aug. 07, 2009 @ 1:32 PM By: MBAZAN

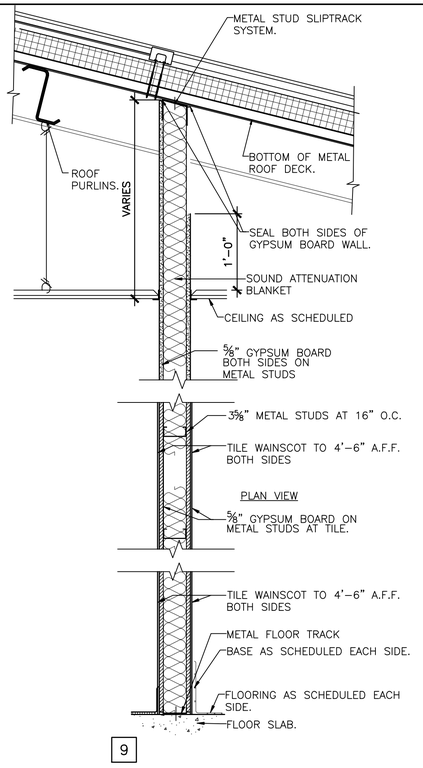

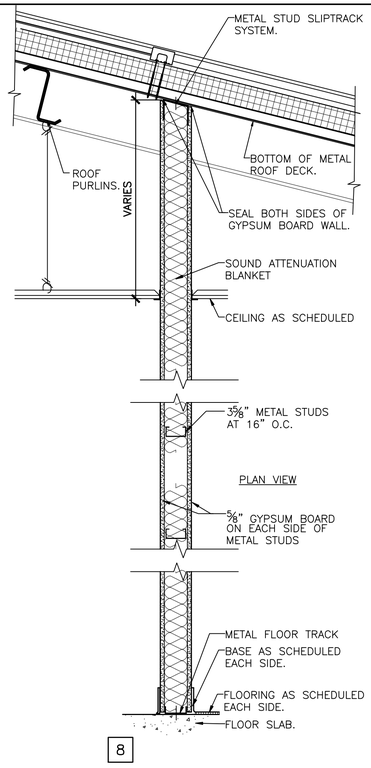

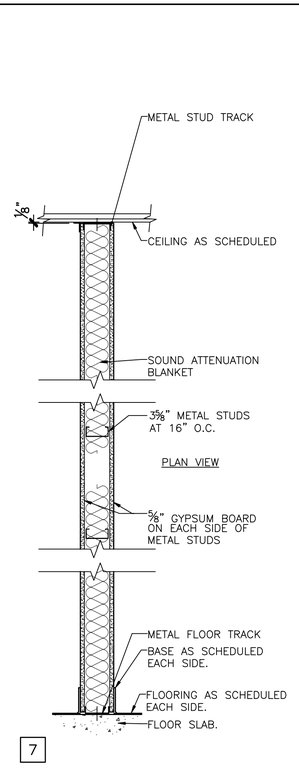

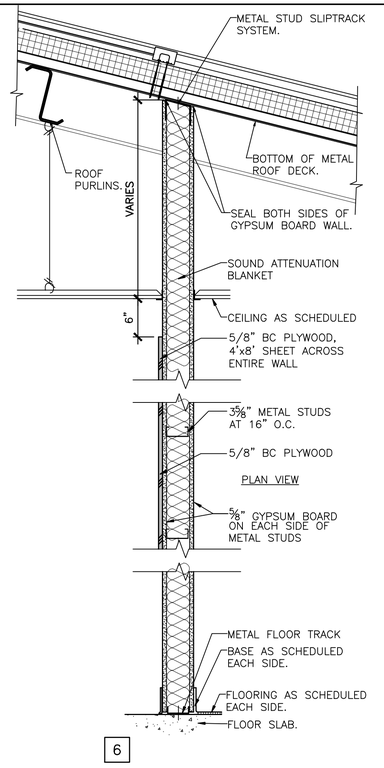

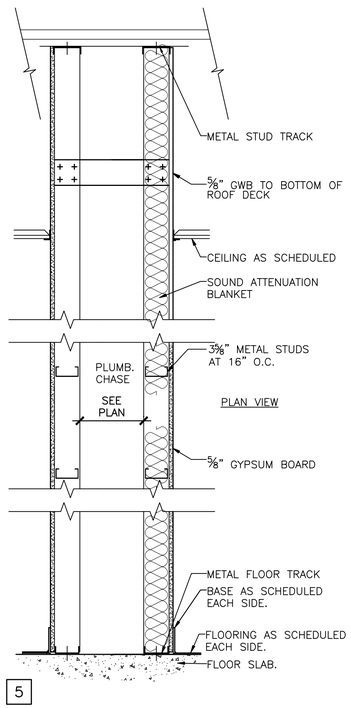

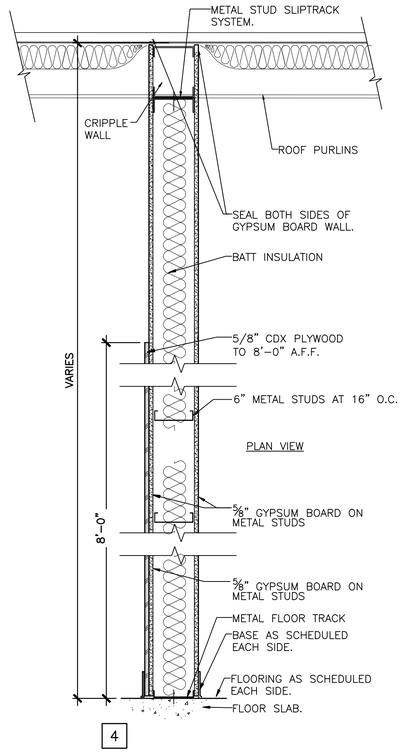

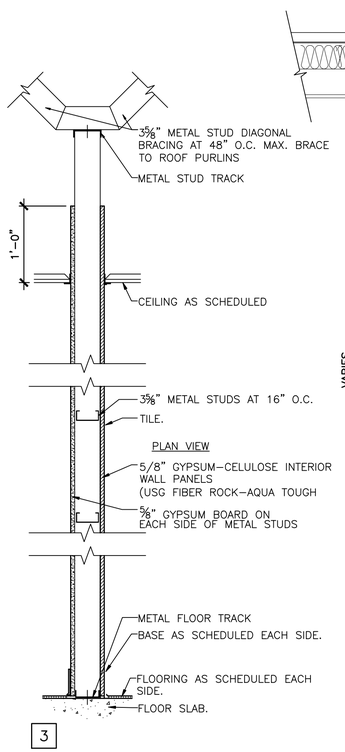

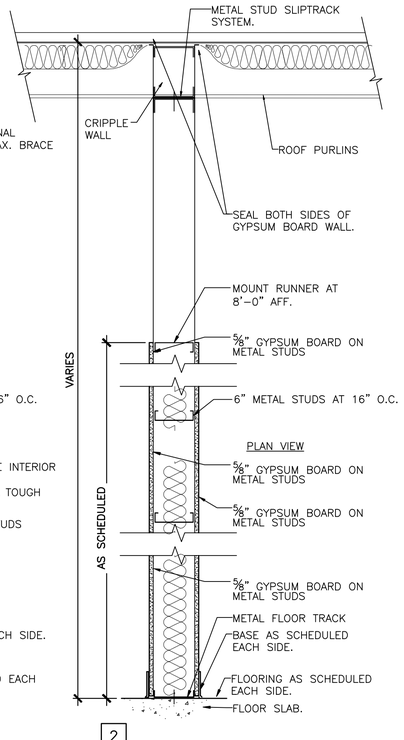

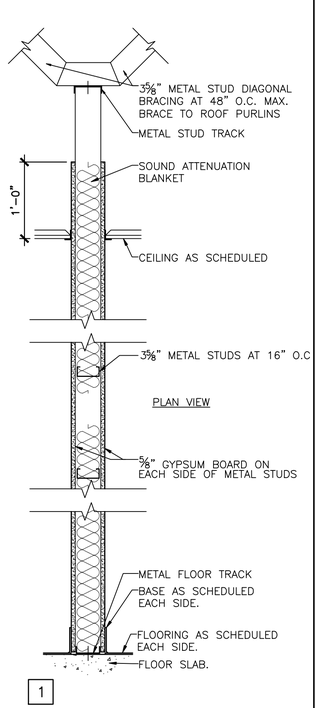

1 ALL PARTITION TYPES
SCALE: 1" = 1'-0"

PARTITION TYPES

NOTE: THIS DRAWING WAS CREATED FOR PRODUCTION ON 22" x 34" SHEET SIZE. DO NOT SCALE PRINTS.

Texas Department of Transportation
125 E. 11th Street
Austin, Texas 78701-2483
(512) 416-2000

Copyright © 2006 Texas Department of Transportation

THIS DOCUMENT IS RELEASED FOR THE PURPOSE OF INFORMATION ONLY
NOT FOR REGULATORY APPROVAL, PERMITTING, OR CONSTRUCTION.

WACO AREA ENGINEER AND MAINTENANCE FACILITY
WACO, MCLENNAN COUNTY
WACO DISTRICT

Revisions

Drawn by: KAO/AV
Project No. CBC4704-00672
Date 05.21.2007
Sheet No.

A8.1
of 37 sheets

CADFILE: T:\MAITW\D06FTWCBC4704-00-6577\02-7-7\704006577\acad\proj\plot pltdrawout\Acad\Arch\06572_A8_1.dwg Plotted: Fri, Aug. 07, 2009 @ 1:22 PM By: MBAZAN

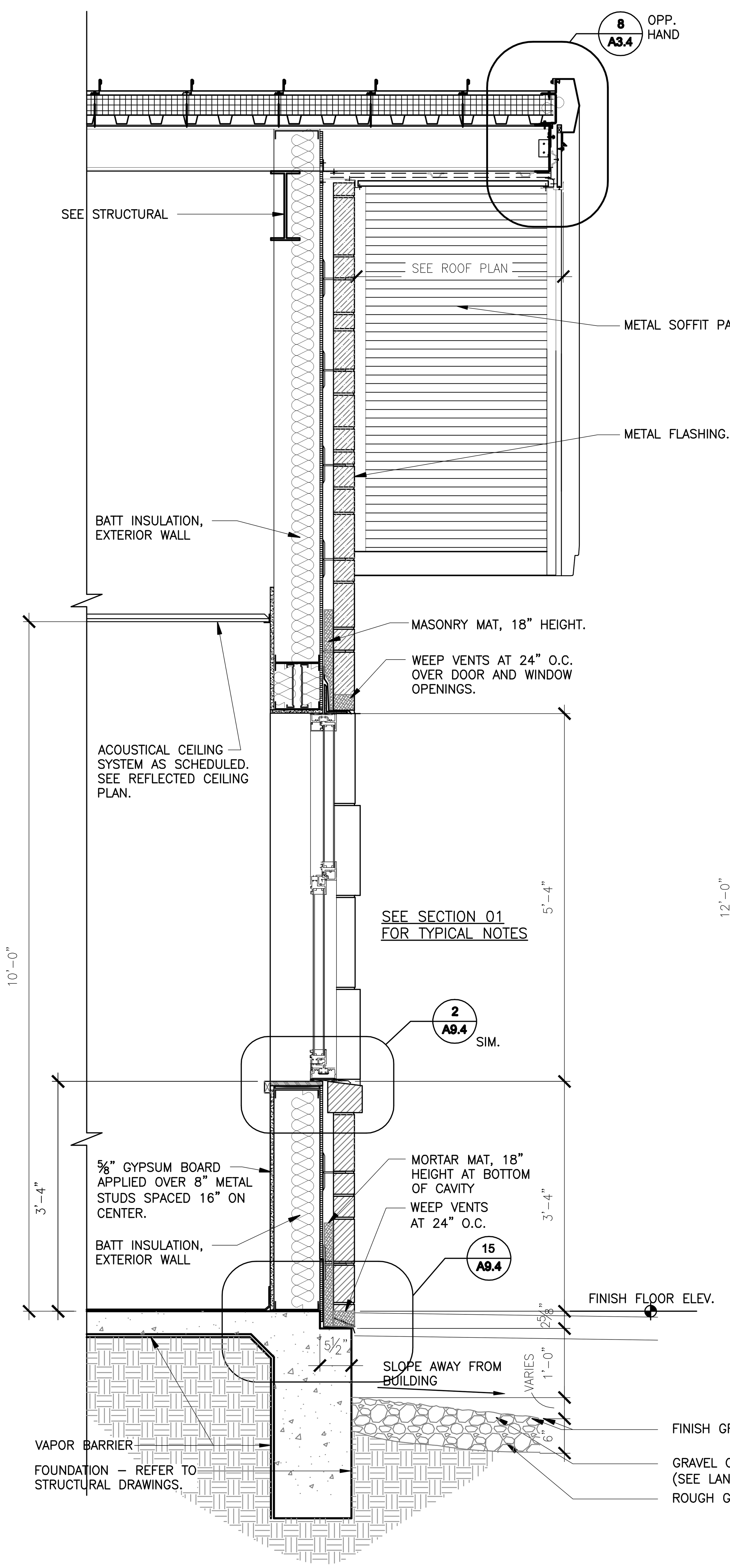

3 END WALL SECTION - OFFICE
SCALE: 3/4" = 1'-0"

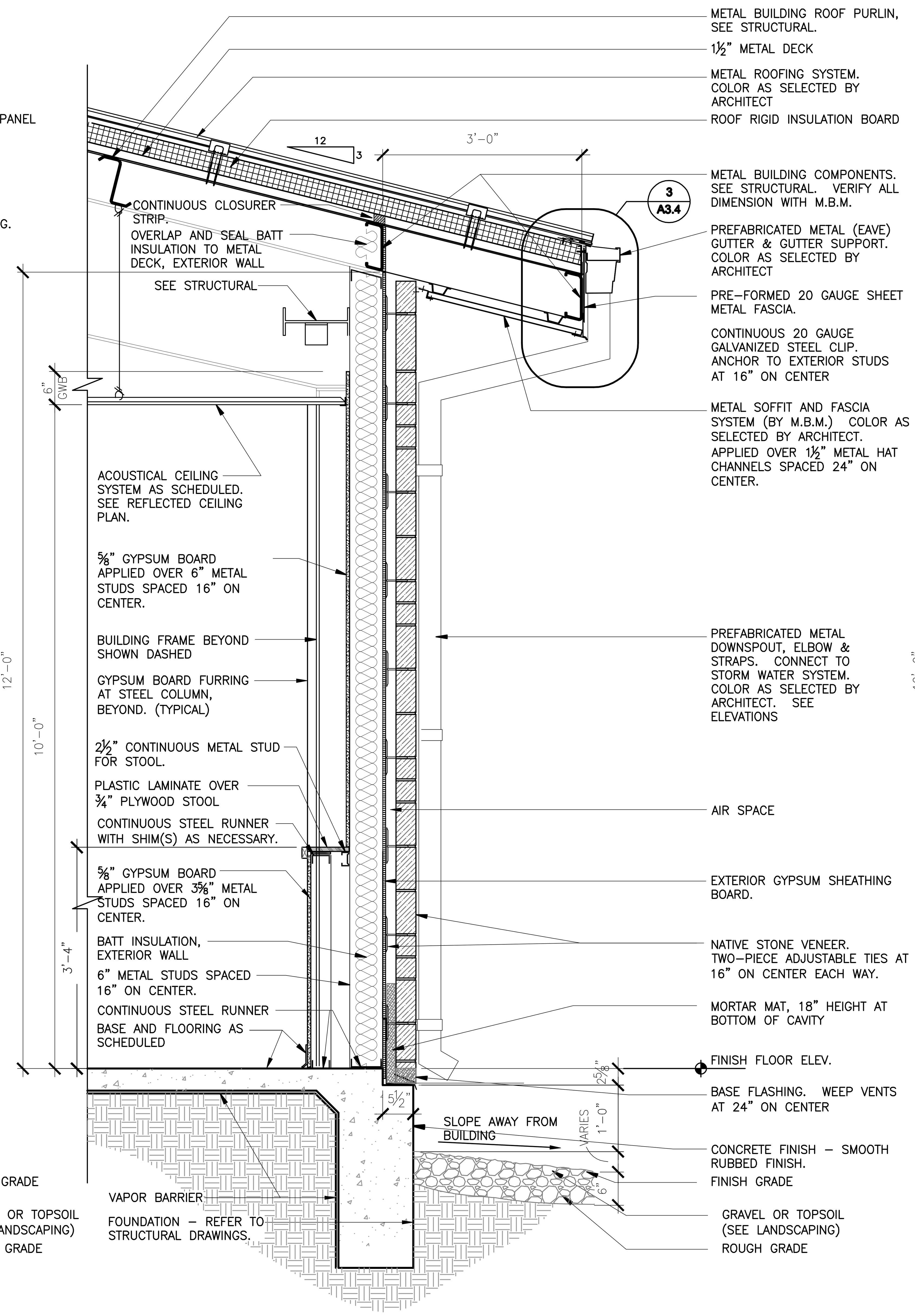

2 WALL SECTION - OFFICE
SCALE: 3/4" = 1'-0"

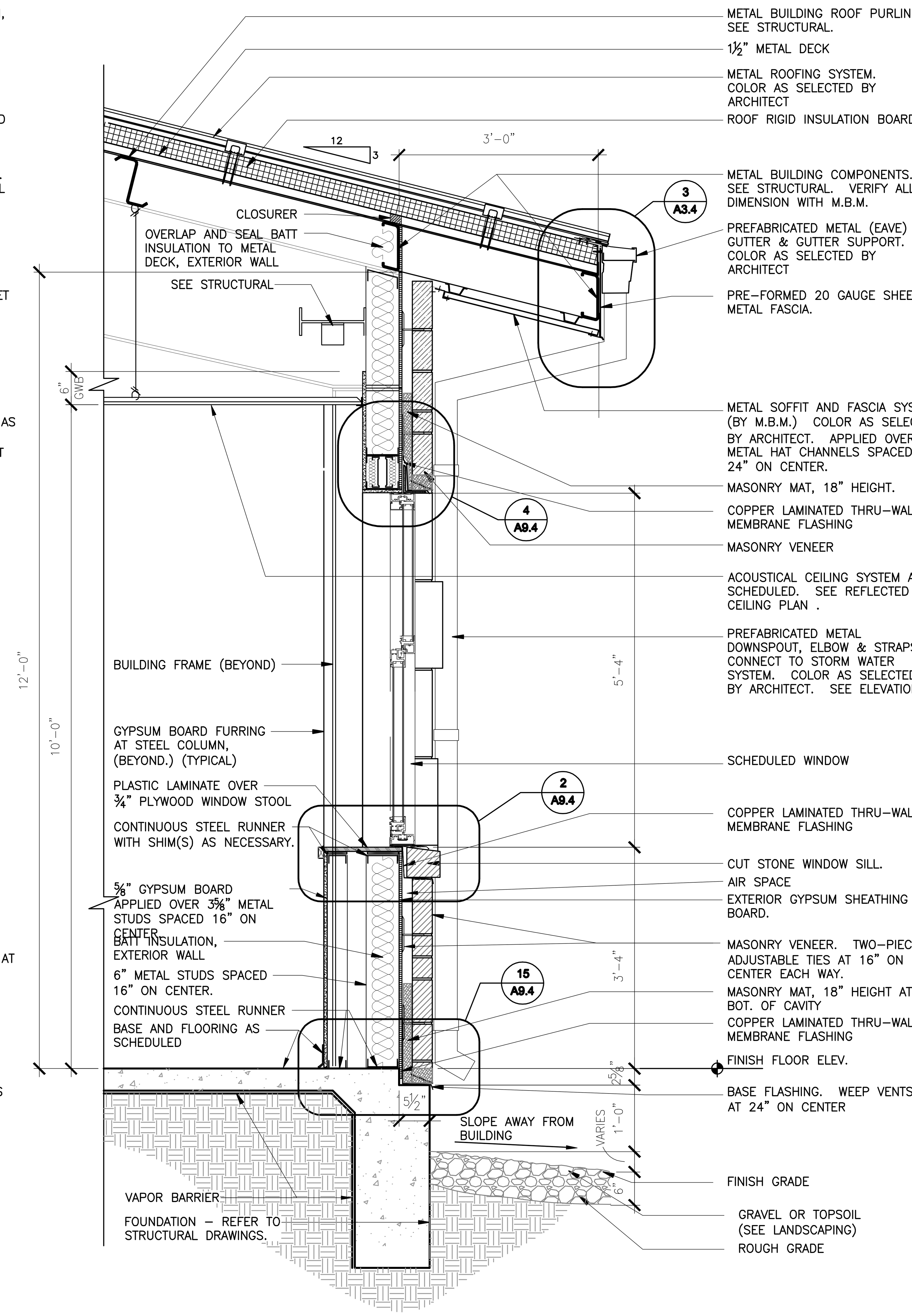

1 WALL SECTION AT WINDOW - OFFICE
SCALE: 3/4" = 1'-0"

CADFILE: T:\MNTFM\D02\TWC\CBC4704-00-537\02-77-470400537\Acad\prototypical pdfs\waco\Acad\Arch\0672_A8_2.dwg Plotted: Fri, Aug. 07, 2009 @ 1:53 PM By: MBAZAN

Texas Department of Transportation
125 E. 11th Street
Austin, Texas 78701-2483
(512) 416-2048
Copyright © 2005 Texas Department of Transportation

THIS DOCUMENT IS RELEASED FOR THE PURPOSE OF INFORMATION ONLY
NOT FOR REGULATORY APPROVAL, PERMITTING, OR CONSTRUCTION.

WACO AREA ENGINEER AND MAINTENANCE FACILITY
WACO, MCLENNAN COUNTY
WACO DISTRICT

Revisions

Drawn by: KAO/AV
Project No. CBC4704-00672
Date 05.21.2007
Sheet No.

A8.2
of 37 sheets

WALL SECTIONS

NOTE: THIS DRAWING WAS CREATED FOR PRODUCTION ON 22" x 34" SHEET SIZE. DO NOT SCALE PRINTS.

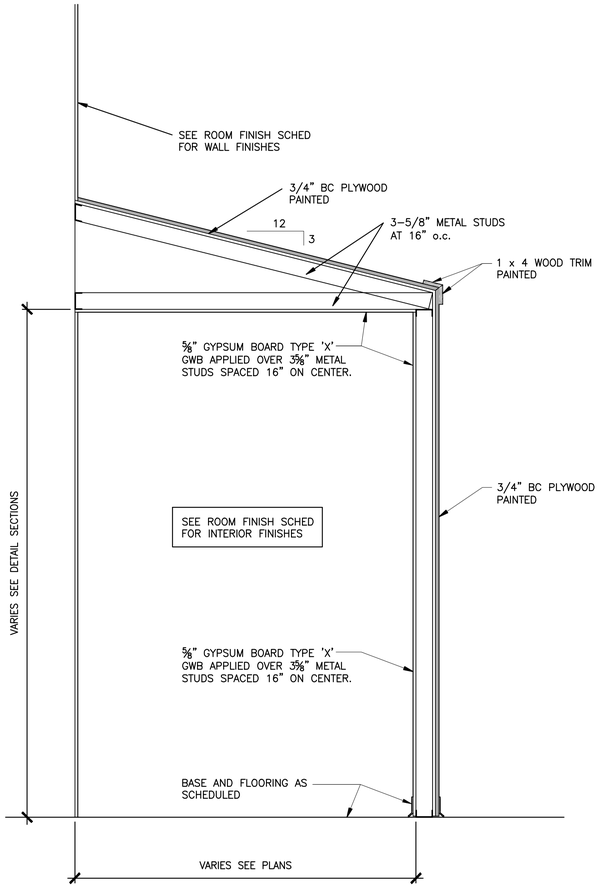

3 WALL SECTION - LAB / SHOP
SCALE: 3/4" = 1'-0"

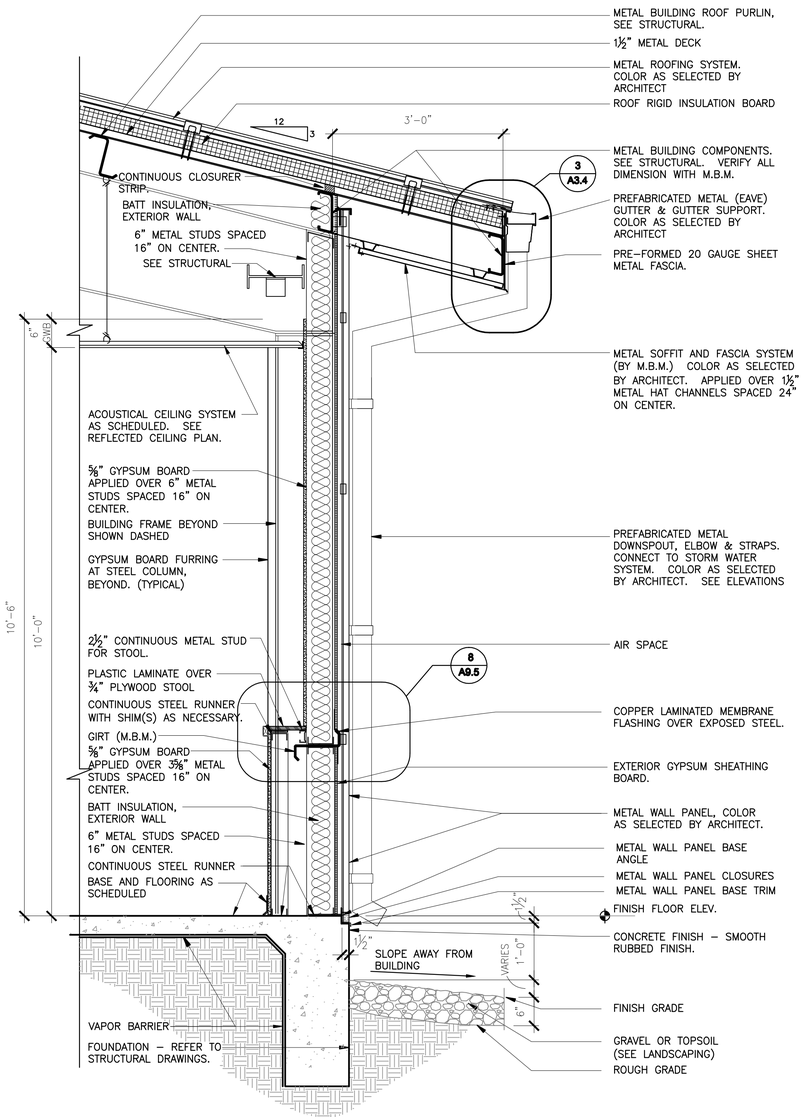

2 WALL SECTION - OFFICE
SCALE: 3/4" = 1'-0"

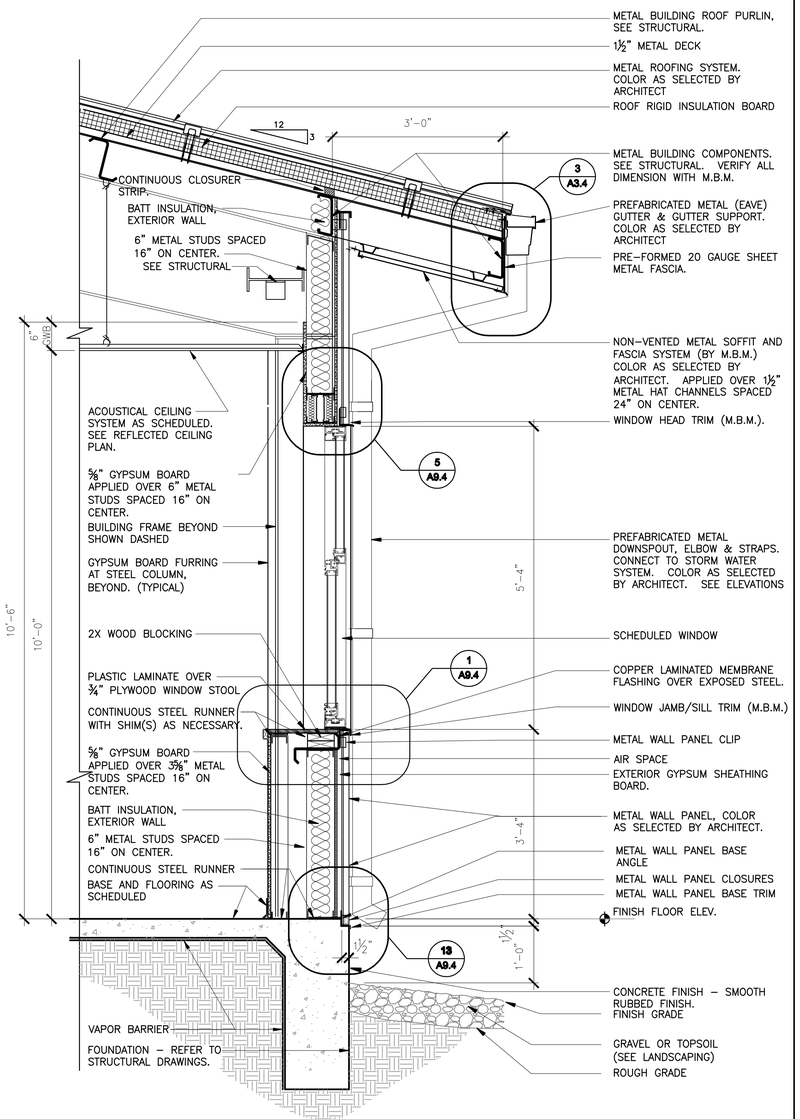

1 WALL SECTION AT WINDOW - OFFICE
SCALE: 3/4" = 1'-0"

WALL SECTIONS

NOTE: THIS DRAWING WAS CREATED FOR PRODUCTION ON 22" x 34" SHEET SIZE. DO NOT SCALE PRINTS.

CADFILE: T:\ANITRA\DGZ\TWC\CBC4704-00-05\102-77-4704005\TWC\cad\print\dgn\sht pdf\texas\Aces\Arch\A0572_A8_3.dwg Plotted: Fri, Aug. 07, 2009 @ 1:39 PM By: MBAZAN

Texas Department of Transportation
125 E. 11th Street
Austin, Texas 78701-2483
(512) 416-2000

Copyright © 2005 Texas Department of Transportation

THIS DOCUMENT IS RELEASED FOR THE PURPOSE OF
INFORMATION ONLY
NOT FOR REGULATORY
APPROVAL, PERMITTING,
OR CONSTRUCTION.

WACO AREA ENGINEER AND MAINTENANCE FACILITY
WACO, MCLENNAN COUNTY
WACO DISTRICT

Revisions

Drawn by: KAO/AV
Project No. CBC4704-00672
Date 05.21.2007
Sheet No.

A8.3
of 37 sheets

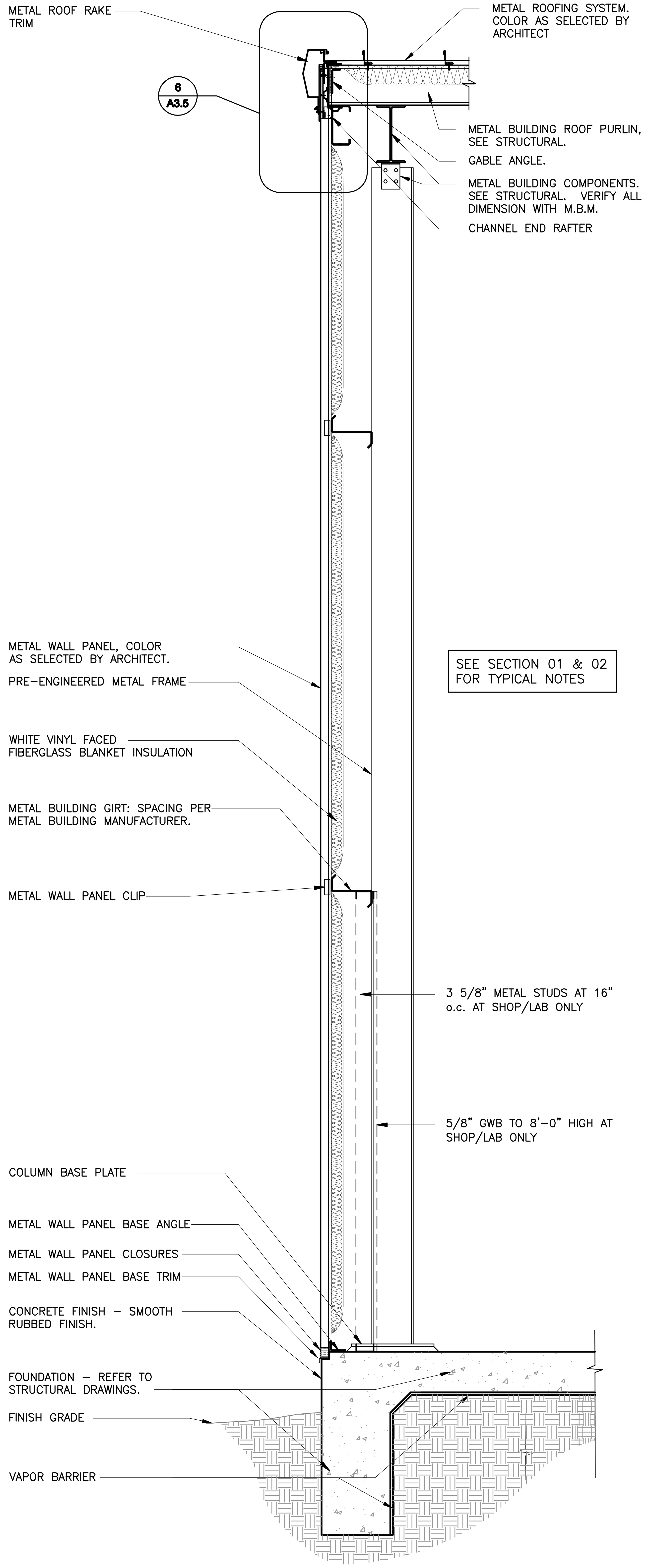

3 TYPICAL SECTION - SHOP
SCALE: 3/4" = 1'-0"

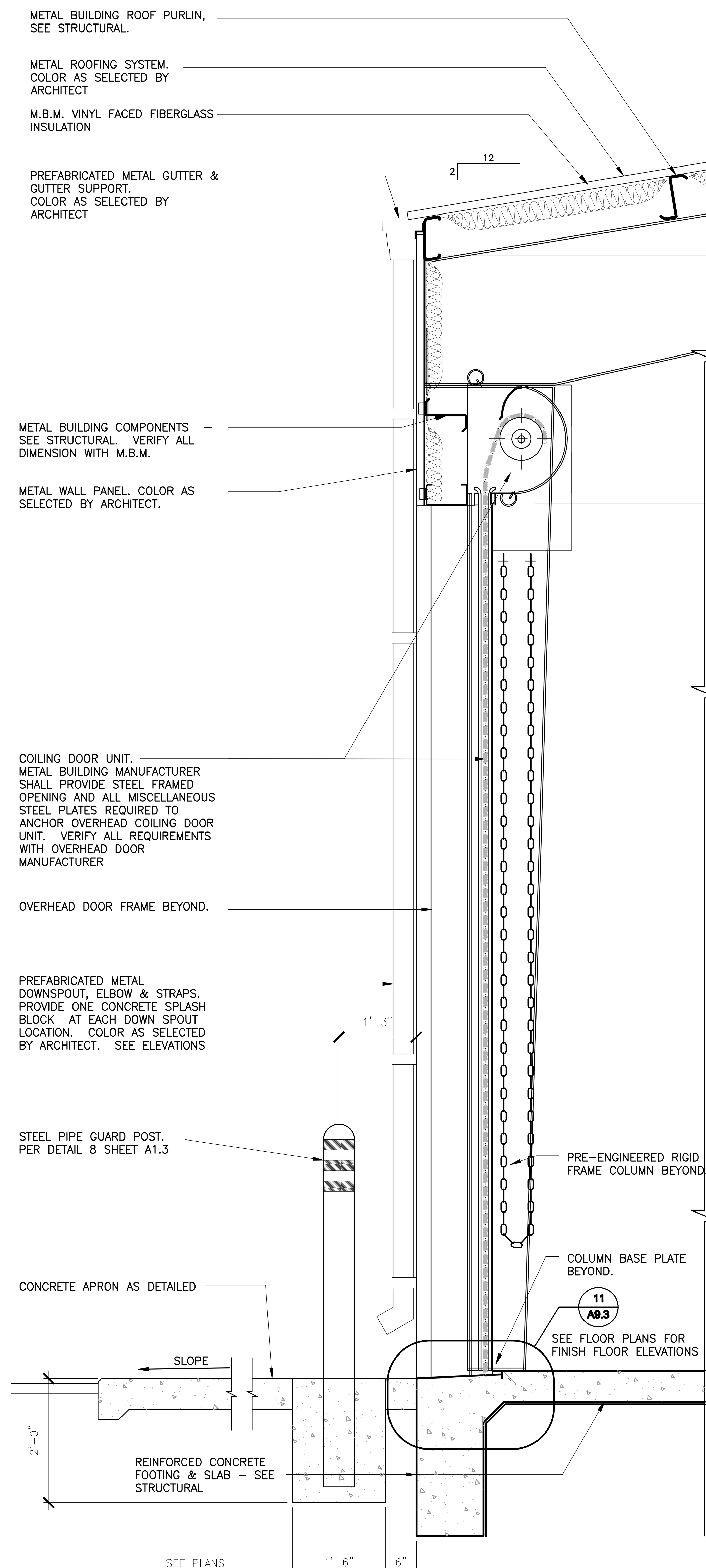

2 TYPICAL SECTION - SHOP
SCALE: 3/4" = 1'-0"

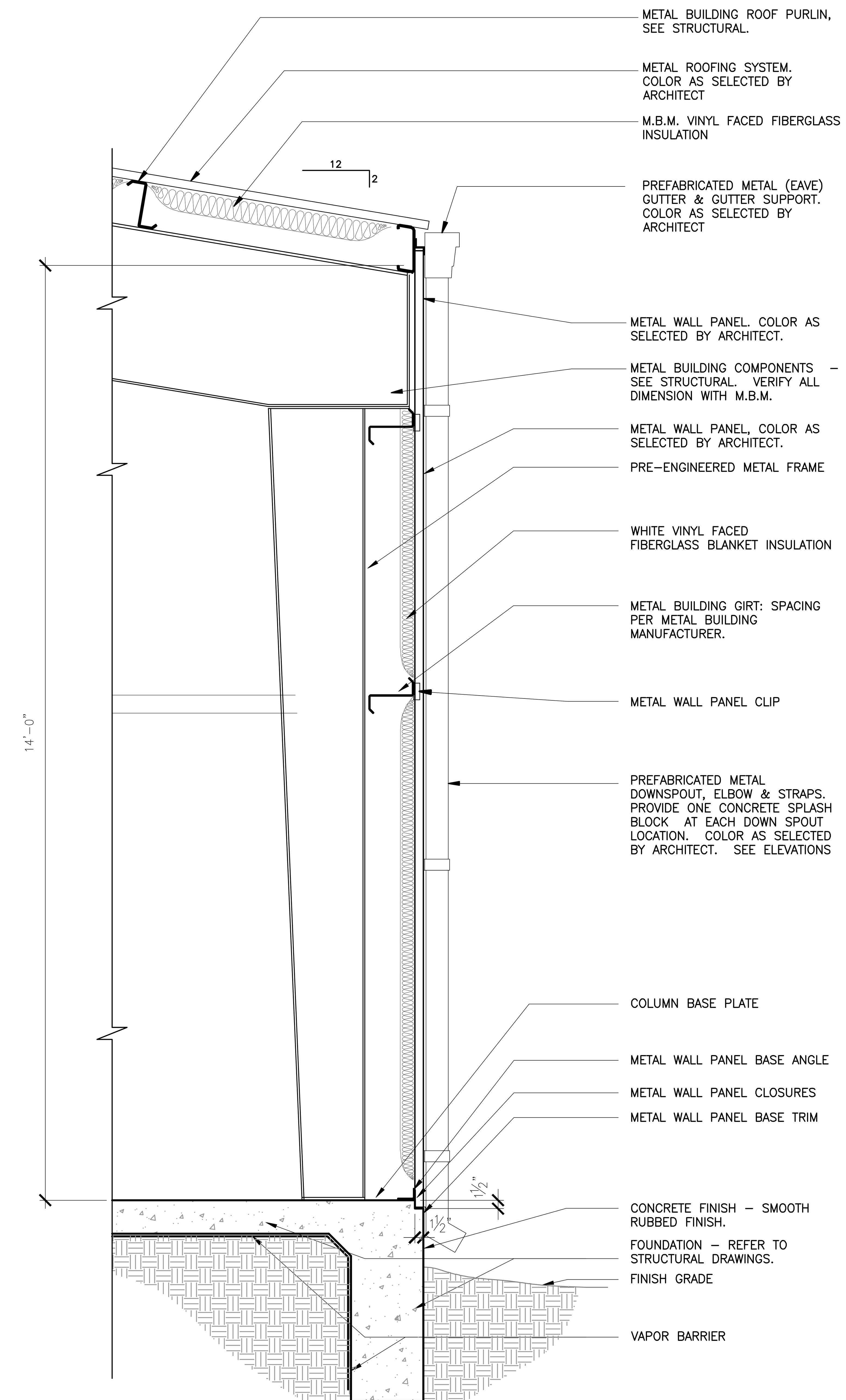

1 TYPICAL SECTION - SHOP
SCALE: 3/4" = 1'-0"

WALL SECTIONS

Texas Department of Transportation
125 E. 11th Street
Austin, Texas 78701-2483
(512) 416-2640
Copyright © 2005 Texas Department of Transportation

THIS DOCUMENT IS RELEASED FOR THE PURPOSE OF INFORMATION ONLY
NOT FOR REGULATORY APPROVAL, PERMITTING, OR CONSTRUCTION.

WACO AREA ENGINEER AND MAINTENANCE FACILITY
WACO, MCLENNAN COUNTY WACO DISTRICT

Revisions

Drawn by: KAO/AV
Project No. CBC4704-00672
Date 05.21.2007
Sheet No.
A8.4
of 37 sheets

CADFILE: T:\MNTFMD02FTW\CBC4704-00-667\02-77-4704000667\Acad\prototypical pdfs\waco\Acad\Arch\0672_A8_4.dwg Plotted: Fri. Aug. 07, 2009 @ 1:04 PM By: MBAZAN

NOTE: THIS DRAWING WAS CREATED FOR PRODUCTION ON 22" x 34" SHEET SIZE. DO NOT SCALE PRINTS.

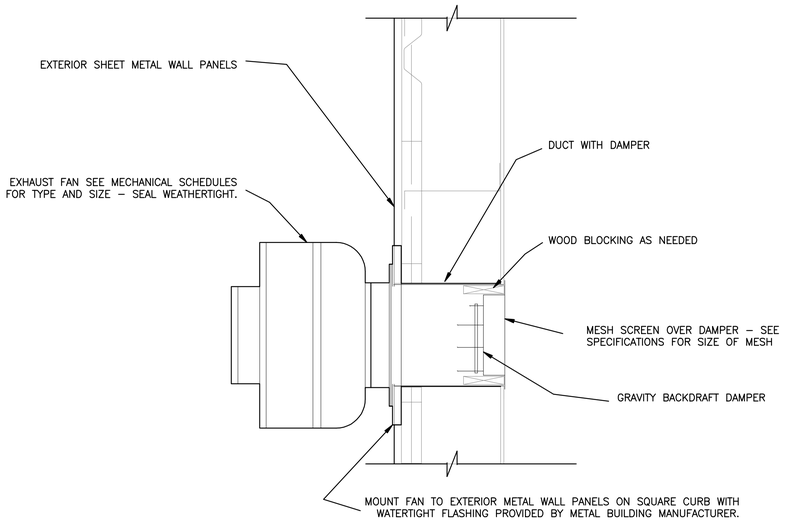

2 WALL SECTION - EXHAUST FAN
SCALE: 3/4" = 1'-0"

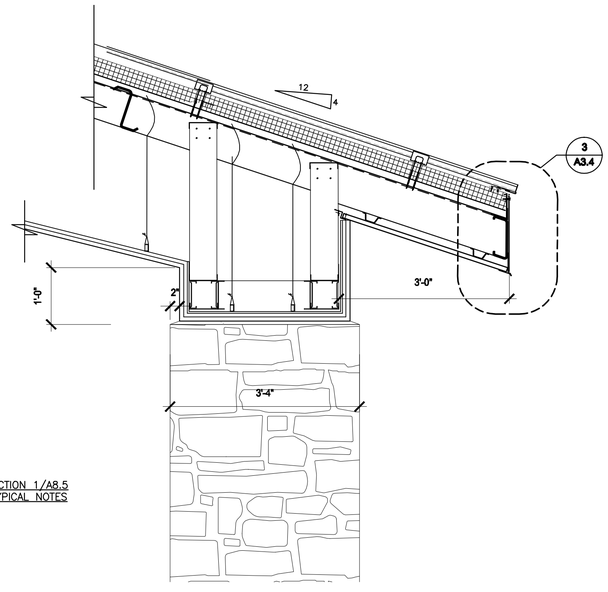

3 WALL SECTION - ENTRANCE
SCALE: 3/4" = 1'-0"

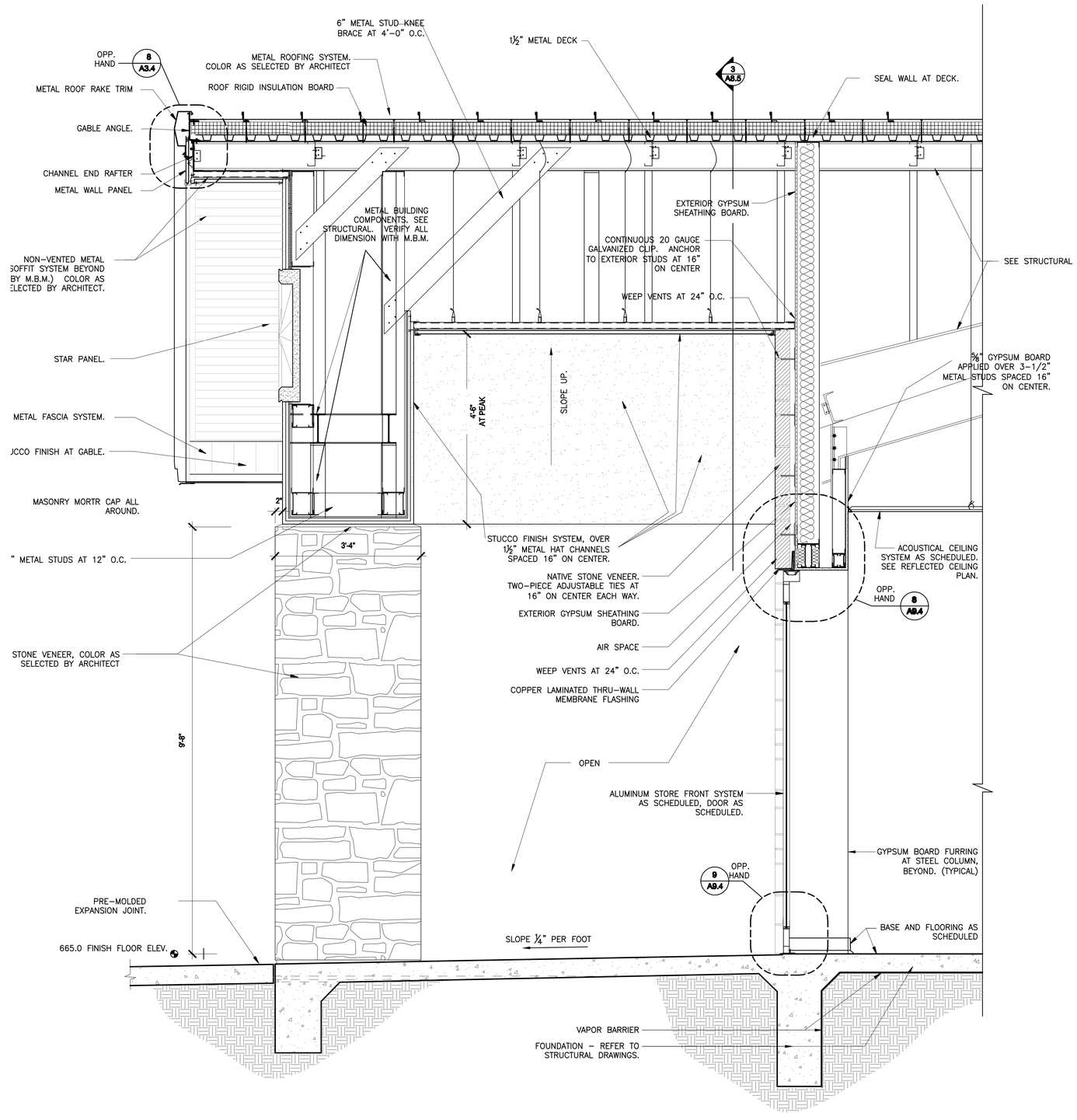

1 WALL SECTION - ENTRANCE
SCALE: 3/4" = 1'-0"

WALL SECTIONS

Texas Department of Transportation
125 E. 11th Street
Austin, Texas 78701-2483
(512) 416-2000
Copyright © 2005 Texas Department of Transportation

THIS DOCUMENT IS RELEASED FOR THE PURPOSE OF
INFORMATION ONLY
NOT FOR REGULATORY APPROVAL, PERMITTING, OR CONSTRUCTION.

WACO AREA ENGINEER AND MAINTENANCE FACILITY
WACO, MCLENNAN COUNTY
WACO DISTRICT

Revisions

Drawn by: KAO/AV
Project No. CBC4704-00672
Date 05.21.2007
Sheet No.
A8.5
of 37 sheets

CADFILE: T:\MNTFM\D02FTW\CBC4704-00-6577\02-77-4704006577\Acad\proj\dgn\plot pdf\Arch\Acad\Arch\16972_A8_5.dwg Plotted: Fri, Aug. 07, 2009 @ 1:24 PM By: MBAZAN

NOTE: THIS DRAWING WAS CREATED FOR PRODUCTION ON SHEET SIZE. DO NOT SCALE PRINTS.

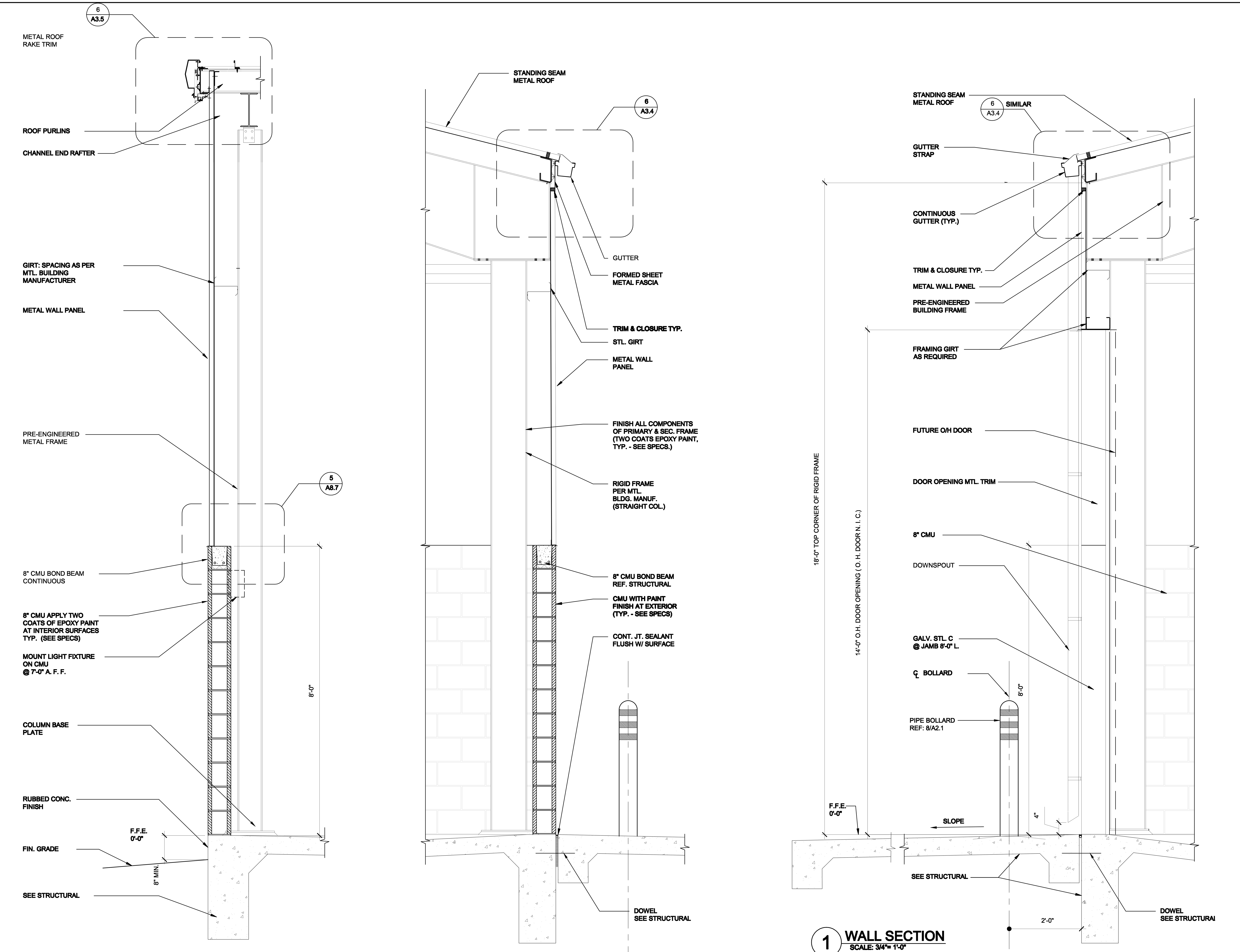

3 **WALL SECTION** SCALE: 3/4"= 1'-0"

2 **WALL SECTION** SCALE: 3/4"= 1'-0"

1 **WALL SECTION** SCALE: 3/4"= 1'-0"

CADFILE: T:\MNTFMD\02FTW\CBC4704-00-637\02-77-470400637\Acad\prototypical pdfs\waco\Acad\Arch\0672_A8_6.dwg Plotted: Fri, Aug. 07, 2009 @ 1:54 PM By: MBAZAN

Texas Department of Transportation
125 E. 11th Street
Austin, Texas 78701-2483
(512) 416-2848
Copyright © 2005 Texas Department of Transportation

THIS DOCUMENT IS RELEASED FOR THE PURPOSE OF INFORMATION ONLY
NOT FOR REGULATORY APPROVAL, PERMITTING, OR CONSTRUCTION.

WACO AREA ENGINEER AND MAINTENANCE FACILITY
WACO, MCLENNAN COUNTY WACO DISTRICT

Revisions

Drawn by: S. F.
Project No. CBC4704-00672
Date 05.21.2007
Sheet No.

A8.6
of 37 sheets

WALL SECTIONS / DETAILS - WASH BAY

NOTE: THIS DRAWING WAS CREATED FOR PRODUCTION ON 22" x 34" SHEET SIZE. DO NOT SCALE PRINTS.

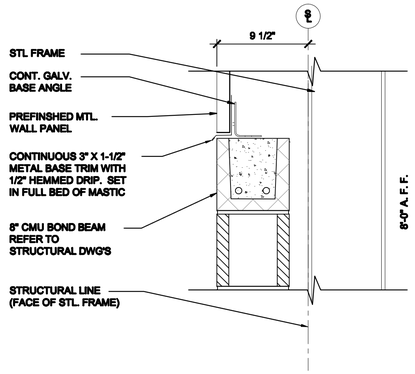

5 WALL DETAIL
SCALE: 1 1/2"= 1'-0"

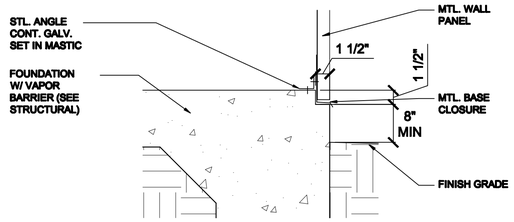

4 WALL DETAIL
SCALE: 1 1/2"= 1'-0"

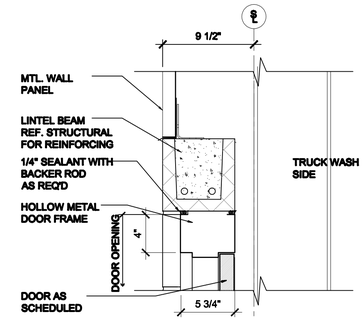

6 DOOR HEAD
SCALE: 1 1/2"= 1'-0"

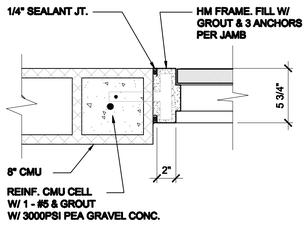

8 DOOR JAMB
SCALE: 1 1/2"= 1'-0"

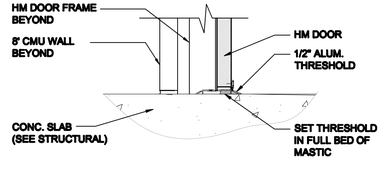

10 DOOR SILL
SCALE: 1 1/2"= 1'-0"

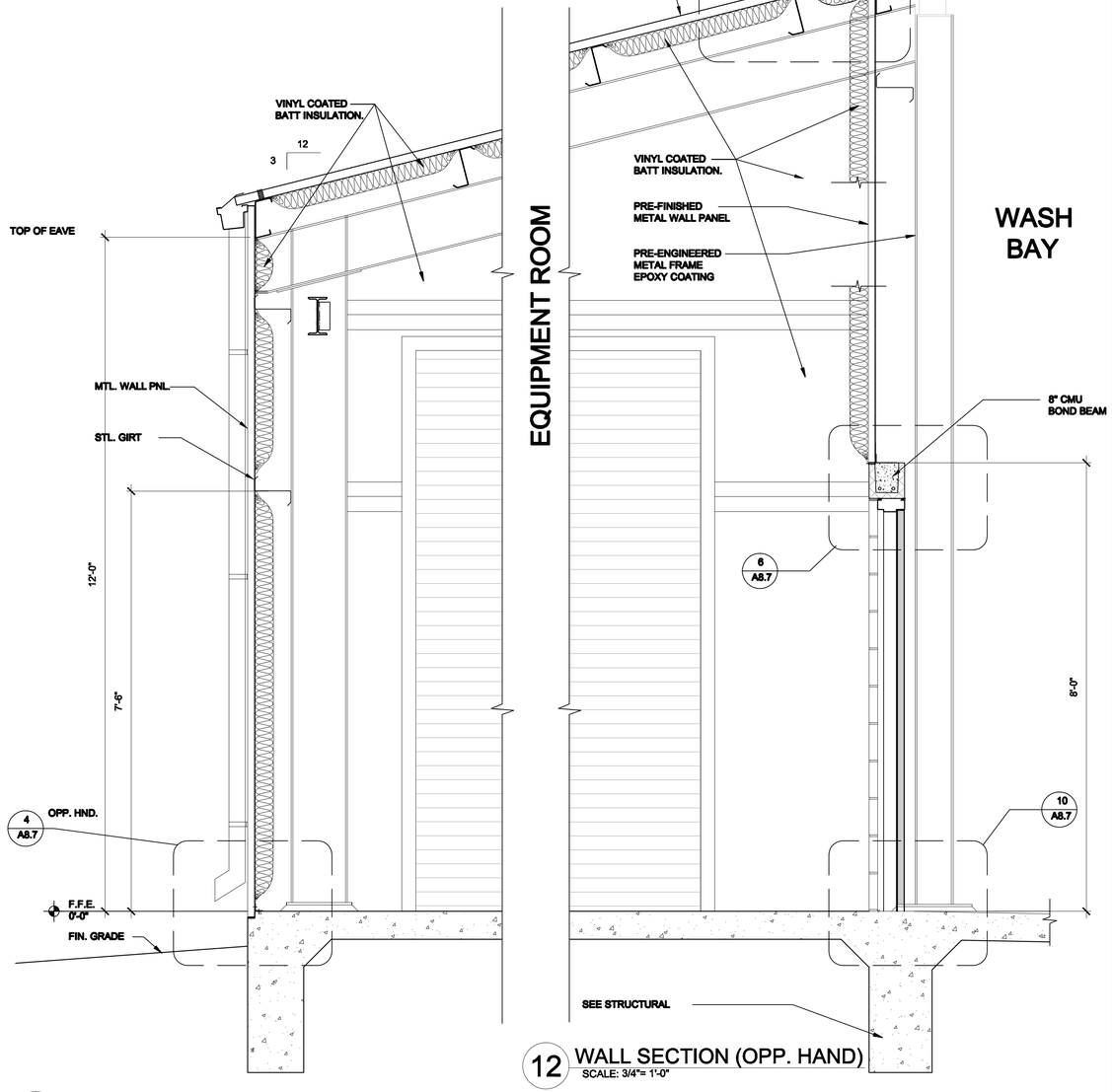

11 WALL SECTION (OPP. HAND)
SCALE: 3/4"= 1'-0"

12 WALL SECTION (OPP. HAND)
SCALE: 3/4"= 1'-0"

WALL SECTIONS / DETAILS - WASH BAY

NOTE: THIS DRAWING WAS CREATED FOR PRODUCTION ON 22" x 34" SHEET SIZE. DO NOT SCALE PRINTS.

CADFILE: T:\MAITR\DGN\CBC4704-00-857002-77-4704008370\acad\projects\plan pdf\waco\Acad\Arch\0672_A8_7.dwg Plotted: Fri, Aug. 07, 2009 @ 1:35 PM By: MBAZAN

Texas Department of Transportation
125 E. 11th Street
Austin, Texas 78701-2483
(512) 416-3000
Copyright © 2005 Texas Department of Transportation

THIS DOCUMENT IS RELEASED FOR THE PURPOSE OF
INFORMATION ONLY
NOT FOR REGULATORY
APPROVAL, PERMITTING,
OR CONSTRUCTION.

WACO AREA ENGINEER
AND MAINTENANCE FACILITY
WACO, MCLENNAN COUNTY
WACO DISTRICT

Revisions

Drawn by:
KAO/SF
Project No.
CBC4704-00672
Date
05.21.2007
Sheet No.

A8.7
of 37 sheets

KEY TO ROOM FINISH SCHEDULE

FLOOR	BASE	WALLS	CEILING
F1 SEALED CONCRETE F2 12" X 12" VINYL COMPOSITION TILE F3 1" x 1" CERAMIC TILE	B1 4" RUBBER BASE B2 NOT USED B3 CERAMIC TILE – COVED	W1 GYPSUM BOARD – PAINTED W2 USG FIBEROCK 5/8" AQUA TOUGH WALL PANELS W3 2" x 2" – 56" HT. GLAZED CERAMIC TILE WAINSCOT– EPOXY PAINT WAILL BOARD ABOVE W4 PAINTED PLYWOOD TO 8' AFF W5 EXPOSED STRUCTURE W6 USG FIBEROCK 5/8" ABUSE RESISTANT PANELS	C1 2' x 2' ACOUSTICAL TILE "A" C2 GYPSUM BOARD – PAINTED C3 EXPOSED STRUCTURE C4 2' x 2' ACOUSTICAL TILE "B"

SCHEDULE OF ROOM FINISHES

	ROOM NO.	ROOM NAME	FLOOR	BASE	WALLS NORTH	WALLS EAST	WALLS SOUTH	WALLS WEST	CEILING MTL.	CEILING HT.	REMARKS
OFFICE BUILDING	101	RECEPTION	F 2	B 1	W 1	W 1	W 1	W 1	C 1	10'–0"	
	102	RECORD STORAGE	F 2	B 1	W 1	W 1	W 1	W 1	C 1	9'–0"	
	103	ASSISTANT ENGINEER	F 2	B 1	W 1	W 1	W 1	W 1	C 1	9'–0"	
	104	AREA ENGINEER	F 2	B 1	W 1	W 1	W 1	W 1	C 1	9'–0"	
	105	ENGINEERING	F 2	B 1	W 1	W 1	W 1	W 1	C 1	10'–0"	
	106	CORRIDOR	F 2	B 1	W 1	W 1	W 1	W 1	C 1	10'–0"	NOTE 4
	107	CORRIDOR	F 2	B 1	W 1	W 1	–	W 1	C 1	10'–0"	
	108	CONFERENCE ROOM	F 2	B 1	W 1	W 1	W 1	W 1	C 1	9'–0"	NOTE 2
	109	SUPPLY / COPY	F 2	B 1	W 1	W 1	W 1	W 1	C 1	9'–0"	
	110	JANITOR	F 1	B 1	W 6	W 6	W6	W 6	C 3	–	
	111	DATA / TELECOM	F 1	B 1	W 1	W 1	W 1	W 1	C 3	–	NOTE 1
	112	ELECTRICAL	F 1	B 1	W 1	W 1	W 1	W 1	C 3	–	
	113	MEN	F 3	B 3	W 2	W 2	W 2	W2–W3	C 1	9'–0"	NOTE 3
	114	WOMEN	F 3	B 3	W 2	W 2	W 2	W2–W3	C 1	9'–0"	NOTE 3
	115	MEETING ROOM	F 2	B 1	W 1	W 1	W 1	W 1	C 1	9'–0"	NOTE 5
	116	MAINTENANCE SUPERVISOR	F 2	B 1	W 1	W 1	W 1	W 1	C 1	9'–0"	
	117	ASSISTANT SUPERVISOR	F 2	B 1	W 1	W 1	W 1	W 1	C 1	9'–0"	
	118	STOCK ROOM	F 2	B 1	W 1	W 1	W 1	W 1	C 1	9'–0"	
	119	CREW ROOM	F 2	B 1	W 1	W 1	W 1	W 1	C 1	10'–0"	
	120	CORRIDOR	F 2	B 1	W 1	–	W 1	W 1	C 1	10'–0"	
LAB / SHOP	201	CORRIDOR	F 2	B 1	W 6	W 6	W 6	W 6	C 1	10'–0"	
	202	LAB	F 2	B 1	W 6	W 6	W 6	W 6	C 1	9'–0"	
	203	LAB STORAGE	F 1	B 1	W 6	W 6	W 6	W 6	C 1	9'–0"	
	204	DUST ROOM	F 2	B 1	W 1	W 1	W 1	W 1	C 1	9'–0"	
	205	OVEN ROOM	F 2	B 1	W 1	W 1	W 1	W 1	C 1	9'–0"	
	206	SURVEY STORAGE	F 2	B 1	W 1	W 1	W 1	W 1	C 1	9'–0"	
	207	GENERAL STORAGE	F 1	B 1	W 1	W 1	W 1	W 1	C 1	9'–0"	
	208	MEN	F 3	B 3	W2–W3	W 2	W 2	W 2	C 4	9'–0"	NOTE 6
	209	WOMEN	F 3	B 3	W 2	W 2	W2–W3	W 2	C 4	9'–0"	NOTE 6
	210	RADIO ROOM	F 1	B 1	W 1	W 1	W 1	W 1	C 4	9'–0"	
	211	HUB ROOM	F 1	B 1	W 1	W 1	W 1	W 1	C 3	–	
	212	CREW ROOM	F 2	B 1	W 1	W 1	W 1	W 1	C 1	9'–0"	
	213	JANITOR	F 1	B 1	W 6	W 6	W 6	W 6	C 3	–	
	214	LOCKED STORAGE	F 1	B 1	W 1	W 1	W 1	W 1	C 1	9'–0"	
	215	EQUIPMENT SHOP	F 1	B 2	W4/W5	W4/W5	W4/W5	W4/W5	C 3	–	
	216	SHOP STORAGE	F 1	B 2	W 5	W 5	W 5	W 5	C 3	–	
	217	MATERIAL STORAGE	F 1	B 2	W 5	W 5	W 5	W 5	C 3	–	
	218	HERBICIDE ROOM	F 1	B 1	W 1	W 1	W 1	W 1	C 3	–	
	301	VEHICLE STORAGE	F 1	B 2	W 5	W 5	W 5	W 5	C 3	–	

FINISH NOTES:

1. INSTALL REDUCER STRIPS AT ALL FLOORING MATERIAL CHANGES.
2. REFER TO SPECIFICATIONS FOR ACOUSTICAL CEILING CLASSIFICATIONS "A" AND "B".

REMARKS NOTES:

NOTE 1. INSTALL 1/2"x 4'x 8' PLYWOOD ON WALL 4' A.F.F. ON SOUTH WALL. PROVIDE NECESSARY BLOCKING IN STUD WALLS TO SUPPORT PLYWOOD.

NOTE 2. PROVIDE BLOCKING IN STUD WALL @ 3' & 7' A.F.F. ON EAST AND WEST WALL OF CONFERENCE ROOM 107 AND NORTH WALL OF MEETING ROOM 114.

NOTE 3. INSTALL CERAMIC TILE OVER $\frac{5}{8}$" FIBEROCK AQUA TOUGH PANELS

NOTE 4. SEE ELEVATION 2/A6.2 FOR FINISHES AT MILLWORK

NOTE 5. SEE ELEVATION 1/A6.2 FOR FINISHES AT MILLWORK

NOTE 6 INSTALL WALL TILE TO A HEIGHT OF 8'-0" AFF AT THREE WALLS OF SHOWER STALL - 8' - W2 CEILING AT SHOWERS, EPOXY PAINT

FINISH SCHEDULE & DETAILS

NOTE: THIS DRAWING WAS CREATED FOR PRODUCTION ON 22" x 34" SHEET SIZE. DO NOT SCALE PRINTS.

Texas Department of Transportation
125 E. 11th Street
Austin, Texas 78701-2483
(512) 416-3000
Copyright © 2005 Texas Department of Transportation

THIS DOCUMENT IS RELEASED FOR THE PURPOSE OF
INFORMATION ONLY
NOT FOR REGULATORY
APPROVAL, PERMITTING,
OR CONSTRUCTION.

WACO AREA ENGINEER
AND MAINTENANCE FACILITY
WACO, MCLENNAN COUNTY
WACO DISTRICT

Revisions

Drawn by:
KAO/EE
Project No.
CBC4704-00672
Date
05.21.2007
Sheet No.
A9.1
of 37 sheets

CADFILE: T:\ANITA\D0GF1WC\BC4704-00-857\02-77-4704008371\Acad\proto\typical pdf\elwaco\Acad\Arch\0572_A9_1.dwg PltStat: FitL Aug. 07, 2009 @ 1:35 PM By: MBAZAN

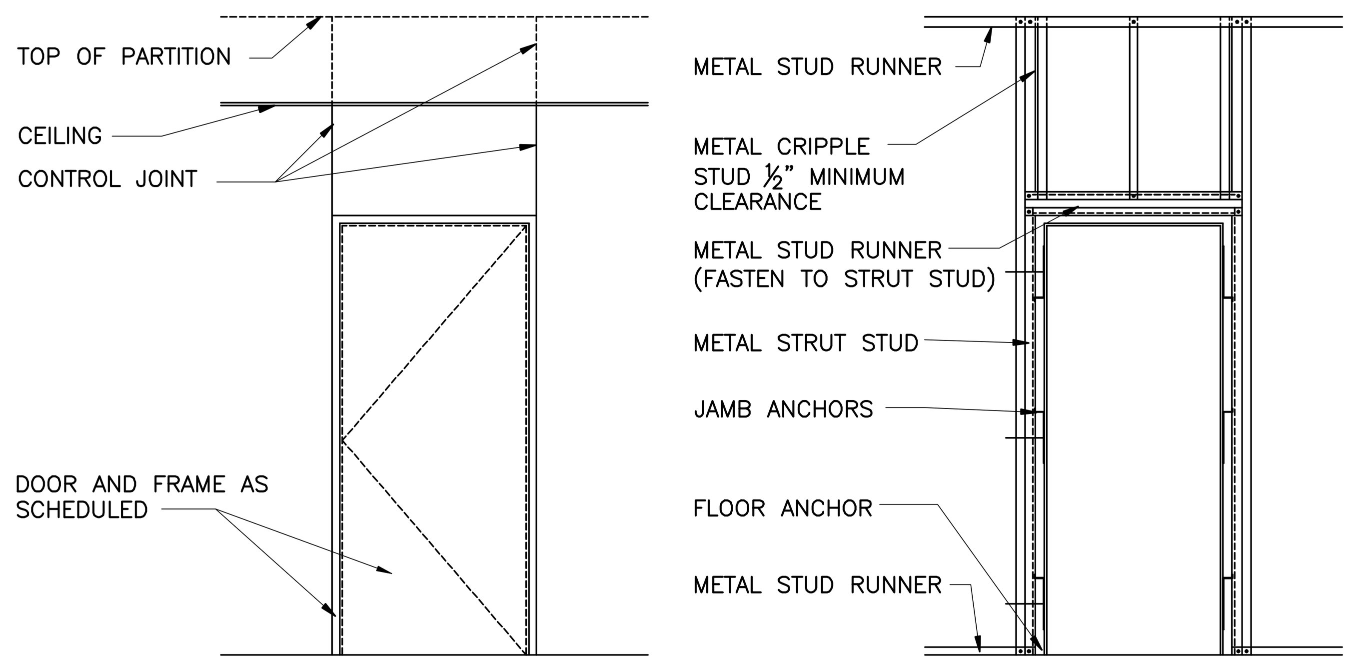

6 DOOR FRAMING
SCALE: N. T. S.

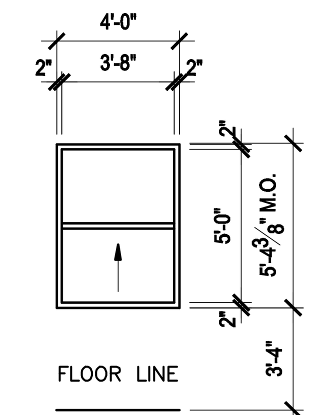

WINDOW TYPE (A)

SINGLE HUNG ALUMINUM (2" X 4½") WITH CLEAR ANODIZED FINISH.

GLAZE WITH 1" THICK, GREEN TINTED (OUTER PANE ONLY), TEMPERED, INSULATING GLASS W/ S.S. INSECT SCREEN

5 WINDOW TYPES
SCALE: N. T. S.

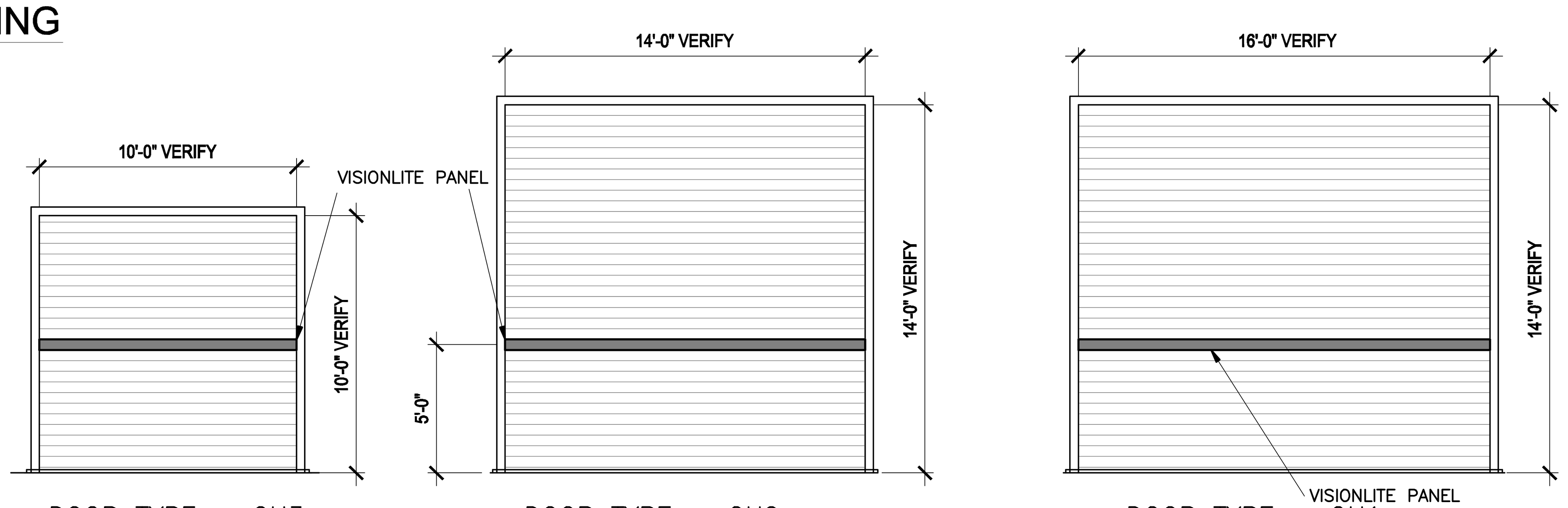

DOOR TYPE – OH3
STEEL, COILING DOOR (INSULATED).

DOOR TYPE – OH2
STEEL, COILING DOOR (INSULATED).

DOOR TYPE – OH1
STEEL, COILING DOOR (INSULATED).

4 COILING DOOR TYPES
SCALE: N. T. S.

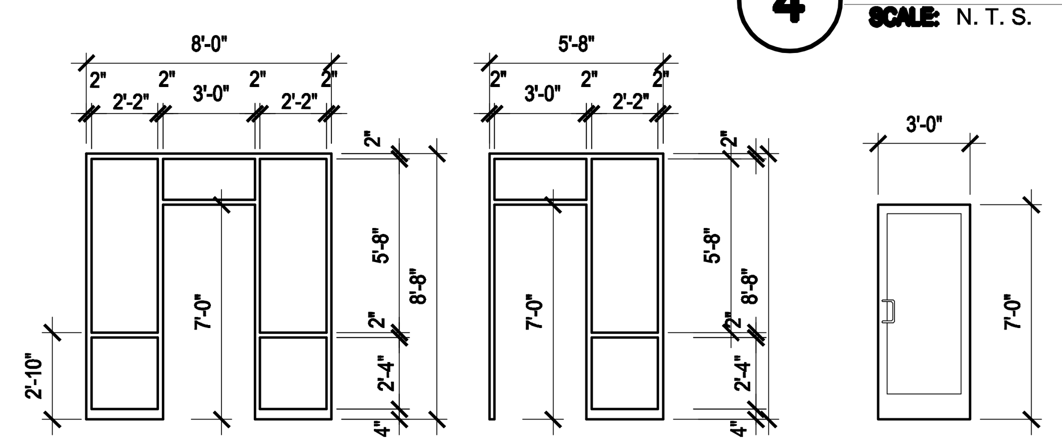

FRAME TYPE – AL2
ALUMINUM STORE FRONT SYSTEM (2" X 4½") WITH CLEAR ANODIZED FINISH.

GLAZE WITH 1" THICK, GREEN TINTED (OUTER PANE ONLY), TEMPERED, INSULATING GLASS.

FRAME TYPE – AL1

DOOR TYPE – AL1
1¾" THICK, ALUMINUM FRAME, NARROW STYLE DOOR WITH 10" HIGH BOTTOM RAIL – CLEAR ANODIZED FINISH.

GLAZE WITH ½" THICK, GREEN, TEMPERED PLATE GLASS.

3 STORE FRONT SYSTEM
SCALE: N. T. S.

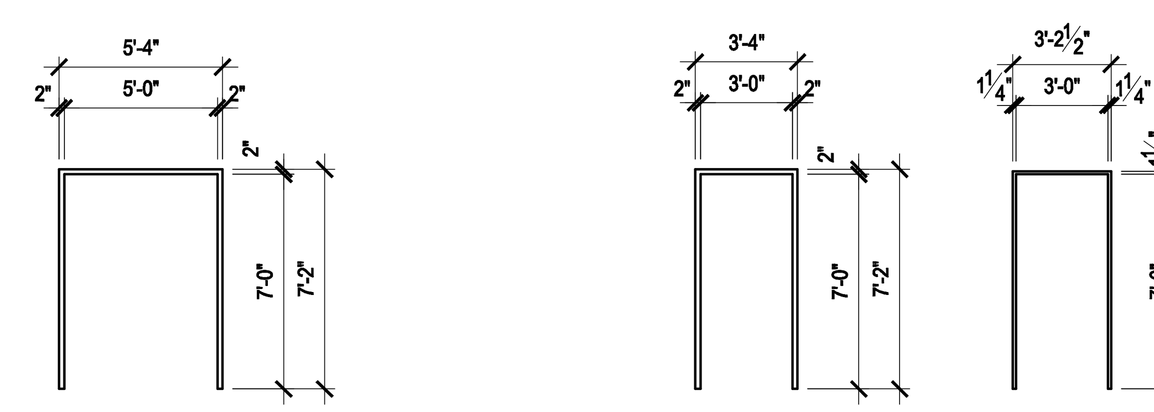

FRAME TYPE F4
HOLLOW METAL FRAME.

PAINT FINISH.

FRAME TYPE F3
NOT USED

FRAME TYPE F2
HOLLOW METAL FRAME.

PAINT FINISH.

FRAME TYPE F1
RED OAK WOOD FRAME.

STAIN AND VARNISH FINISH. MATCH DOOR AND TRIM.

2 FRAME TYPES
SCALE: N. T. S.

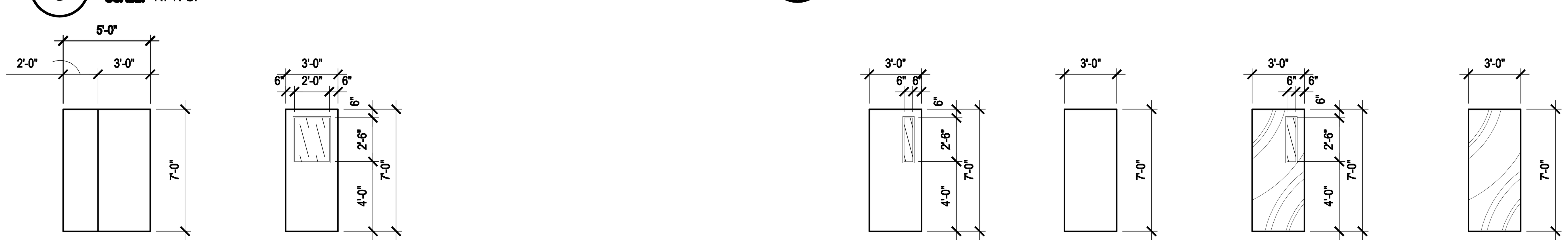

DOOR TYPE – D8
1¾" THICK, FLUSH, EXTRA HEAVY-DUTY, HOLLOW METAL DOOR.

PAINT FINISH.

DOOR TYPE – D7
1¾" THICK, FLUSH, EXTRA HEAVY-DUTY, HOLLOW METAL DOOR.

PAINT FINISH.

FURNISH DOOR WITH ¼" THICK, CLEAR, GLASS VIEW LITE (6"WX24"H) IN METAL FRAME

DOOR TYPE – D6
NOT USED

DOOR TYPE – D4
1¾" THICK, FLUSH, EXTRA HEAVY-DUTY, HOLLOW METAL DOOR.

PAINT FINISH.

FURNISH DOOR WITH ¼" THICK, CLEAR, GLASS VIEW LITE (6"WX24"H) IN METAL FRAME

DOOR TYPE – D3
1¾" THICK, FLUSH, EXTRA HEAVY-DUTY, HOLLOW METAL DOOR.

PAINT FINISH.

DOOR TYPE – D2
1¾" THICK, FLUSH, SOLID CORE, PLAIN SLICED, RED OAK, VENEER DOOR.

STAIN AND VARNISH FINISH.

FURNISH DOOR WITH ¼" THICK, CLEAR, GLASS VIEW LITE (6"WX24"H) IN METAL FRAME

DOOR TYPE – D1
1¾" THICK, FLUSH, SOLID CORE, PLAIN SLICED, RED OAK, VENEER DOOR.

STAIN AND VARNISH FINISH.

1 DOOR TYPES
SCALE: N. T. S.

DOOR SCHEDULE

	DOOR NUMBER	DOOR SIZE	DOOR TYPE	DOOR MAT'L	FRAME TYPE	FRAME MAT'L	DETAILS HEAD	DETAILS JAMB	DETAILS SILL	FIRE RATE	HDWE SET	REMARKS
OFFICE BUILDING	101	3-0" X 7-0" X 1 3/4"	AL1	ALUM.	AL2	ALUM.	8/A9.4		9/A9.4		9	NOTE 1
	102	3'-0" X 7'-0" X 1 3/4"	D1	WOOD	F1	WOOD	10/A9.3	9/A9.3			4	
	103	3'-0" X 7'-0" X 1 3/4"	D1	WOOD	F1	WOOD	10/A9.3	9/A9.3			7	
	104	3'-0" X 7'-0" X 1 3/4"	D1	WOOD	F1	WOOD	10/A9.3	9/A9.3			7	
	105	3'-0" X 7'-0" X 1 3/4"	D4	H. M.	F2	H. M.	3/A9.3	2/A9.3	1/A9.3		1	NOTE 1
	107	3'-0" X 7'-0" X 1 3/4"	D4	H. M.	F2	H. M.	3/A9.3	2/A9.3	1/A9.3		1	NOTE 1
	108	3'-0" X 7'-0" X 1 3/4"	D2	WOOD	F1	WOOD	10/A9.3	9/A9.3			6	
	109	Clear Passageway	N/A	N/A	N/A	N/A						
	110	3'-0" X 7'-0" X 1 3/4"	D1	WOOD	F1	WOOD	10/A9.3	9/A9.3			4	
	111	3'-0" X 7'-0" X 1 3/4"	D1	WOOD	F1	WOOD	10/A9.3	9/A9.3			4	
	112	3'-0" X 7'-0" X 1 3/4"	D1	WOOD	F1	WOOD	10/A9.3	9/A9.3			4	
	113	3'-0" X 7'-0" X 1 3/4"	D1	WOOD	F1	WOOD	10/A9.3	9/A9.3			8	NOTE 2
	114	3'-0" X 7'-0" X 1 3/4"	D1	WOOD	F1	WOOD	10/A9.3	9/A9.3			5	NOTE 2
	115A	3'-0" X 7'-0" X 1 3/4"	D4	H. M.	F2	H. M.	3/A9.3	2/A9.3	1/A9.3		1	NOTE 1
	115B	3'-0" X 7'-0" X 1 3/4"	D2	WOOD	F1	WOOD	10/A9.3	9/A9.3			6	
	116	3'-0" X 7'-0" X 1 3/4"	D1	WOOD	F1	WOOD	10/A9.3	9/A9.3			7	
	117	3'-0" X 7'-0" X 1 3/4"	D1	WOOD	F1	WOOD	10/A9.3	9/A9.3			7	
	118	3'-0" X 7'-0"	D1	WOOD	F1	WOOD	10/A9.3	9/A9.3			7	
LAB/SHOP	201A	3-0" X 7'-0" X 1 3/4"	AL1	ALUM.	AL1	ALUM.					9	NOTE 1
	201B	3-0" X 7'-0" X 1 3/4"	AL1	ALUM.	AL1	ALUM.					9	NOTE 1
	202A	3'-0" X 7'-0" X 1 3/4"	D7	H.M.	F2	H.M.	6/A9.3	5/A9.3			4	
	202B-1	3'-0" x 7-0" x 1-3/4"	D8	H.M.	F4	H.M.	16/A9.3	15/A9.3	11/A9.3		2	Leaf 1
	202B-2	2'-0" x 7-0" x 1-3/4"	D8	H.M.		H.M.	16/A9.3	15/A9.3	11/A9.3			Leaf 2
	203A	3'-0" X 7'-0" X 1 3/4"	D3	H.M.	F2	H.M.	6/A9.3	5/A9.3			4	
	203B-1	3'-0" x 7-0" x 1-3/4"	D8	H.M.	F4	H.M.	16/A9.3	15/A9.3	11/A9.3		2	Leaf 1
	203B-2	2'-0" x 7-0" x 1-3/4"	D8	H.M.		H.M.	16/A9.3	15/A9.3	11/A9.3			Leaf 2
	204	3'-0" X 7'-0" X 1 3/4"	D3	H.M.	F2	H.M.	6/A9.3	5/A9.3			7	
	205-1	3'-0" x 7-0" x 1-3/4"	D8	H.M.	F4	H.M.	6/A9.3	5/A9.3			2	Leaf 1
	205-2	2'-0" x 7-0" x 1-3/4"	D8	H.M.		H.M.	16/A9.3	15/A9.3	11/A9.3			Leaf 2
	206	3'-0" X 7'-0" X 1 3/4"	D3	H.M.	F2	H.M.	6/A9.3	5/A9.3			4	
	207	3'-0" X 7'-0" X 1 3/4"	D3	H.M.	F2	H.M.	6/A9.3	5/A9.3			4	
	208	3'-0" X 7'-0" X 1 3/4"	D3	H.M.	F2	H.M.	6/A9.3	5/A9.3			8	
	209	3'-0" X 7'-0" X 1 3/4"	D3	H.M.	F2	H.M.	6/A9.3	5/A9.3			8	
	210	3'-0" x 7-0" x 1-3/4"	D3	H.M.	F2	H.M.	16/A9.3	15/A9.3	11/A9.3		4	
	211	3'-0" X 7'-0" X 1 3/4"	D3	H.M.	F2	H.M.	6/A9.3	5/A9.3			4	
	212	3'-0" X 7'-0" X 1 3/4"	D7	H.M.	F2	H.M.	6/A9.3	5/A9.3			7	
	213	3'-0" X 7'-0" X 1 3/4"	D3	H.M.	F2	H.M.	6/A9.3	5/A9.3			4	
	214	3'-0" X 7'-0" X 1 3/4"	D3	H.M.	F2	H.M.	6/A9.3	5/A9.3			4	
	215A	3'-0" X 7'-0" X 1 3/4"	D4	H.M.	F2	H.M.	6/A9.3	5/A9.3			4	
	215B	3'-0" x 7-0" x 1-3/4"	D4	H.M.	F2	H.M.	14/A9.3	13/A9.3	4/A9.3		4	
	215C	16'-0" x 14'-0" x 2"	OH1	STEEL		STEEL	12/A9.3	17/A9.3	11/A9.3		10	
	215D	16'-0" x 14'-0" x 2"	OH1	STEEL		STEEL	12/A9.3	17/A9.3	11/A9.3		10	
	216A	2-3'-0"x 7'-0"x 1-3/4"	D5	H.M.	F5	H.M.	6/A9.3	5/A9.3			2	
	216B	10'-0" x 14'-0" x 2"	OH2	STEEL		STEEL	12/A9.3	17/A9.3	11/A9.3		10	
	217A	3'-0" X 7'-0" X 1 3/4"	D3	H.M.	F2	H.M.	6/A9.3	5/A9.3			4	
	217B	3'-0" x 7-0" x 1-3/4"	D3	H.M.	F2	H.M.	14/A9.3	13/A9.3	4/A9.3		4	
	217C	14'-0" x 14'-0" x 2"	OH2	STEEL		STEEL	12/A9.3	17/A9.3	11/A9.3		10	
	218	3'-0" x 7-0" x 1-3/4"	D3	H.M.	F2	H.M.	14/A9.3	13/A9.3	4/A9.3		4	NOTE 3
VEHICLE STOR	301A	3'-0" x 7-0" x 1-3/4"	D4	H.M.	F2	H.M.	14/A9.3	13/A9.3	4/A9.3		4	
	301B	3'-0" x 7-0" x 1-3/4"	D4	H.M.	F2	H.M.	14/A9.3	13/A9.3	4/A9.3		4	
	301C	14'-0" x 14'-0" x 2"	OH2	STEEL		STEEL	12/A9.3	17/A9.3	11/A9.3		7	
	301D	14'-0" x 14'-0" x 2"	OH2	STEEL		STEEL	12/A9.3	17/A9.3	11/A9.3		7	
	301E	14'-0" x 14'-0" x 2"	OH2	STEEL		STEEL	12/A9.3	17/A9.3	11/A9.3		7	
	301F	14'-0" x 14'-0" x 2"	OH2	STEEL		STEEL	12/A9.3	17/A9.3	11/A9.3		7	
	301G	14'-0" x 14'-0" x 2"	OH2	STEEL		STEEL	12/A9.3	17/A9.3	11/A9.3		7	
WASH BAY	1	3'-0" X 7'-0" X 1 3/4"	D3	H.M.	F2	H.M.	6/A8.7	8/A8.7	10/A8.7		1	
	2	3'-0" X 7'-0" X 1 3/4"	D3	H.M.	F2	H.M.	6/A8.7	8/A8.7	10/A8.7		1	
	3	10'-0" x 10'-0"	OH3	STEEL	-	STEEL	12/A9.3	17/A9.3	11/A9.3		4	

REMARK NOTES:

1/2" WEATHERSTRIPPING AND D00R SWEEP.
UNDERCUT DOOR 1".
SEE MECHANICAL SPECIFICATIONS FOR LOUVER TYPE.
INSTALL 4" WIDE DUAL GUARD BY PROTECTO WRAP COMPANY UNDER ALL EXTERIOR DOOR THRESHOLDS.

Texas Department of Transportation
125 E. 11th Street
Austin, Texas 78701-2483
(512) 416-3048

Copyright © 2006 Texas Department of Transportation

THIS DOCUMENT IS RELEASED FOR THE PURPOSE OF INFORMATION ONLY
NOT FOR REGULATORY APPROVAL, PERMITTING, OR CONSTRUCTION.

WACO AREA ENGINEER AND MAINTENANCE FACILITY
WACO, MCLENNAN COUNTY WACO DISTRICT

Revisions

Drawn by: KAO/EE
Project No. CBC4704-00672
Date 05.21.2007
Sheet No.

A9.2
of 37 sheets

DOOR SCHEDULE - DOOR & WINDOW TYPES

NOTE: THIS DRAWING WAS CREATED FOR PRODUCTION ON 22" x 34" SHEET SIZE. DO NOT SCALE PRINTS.

Plotted: Fri, Aug. 07, 2009 @ 1:59 PM By: MBAZAN

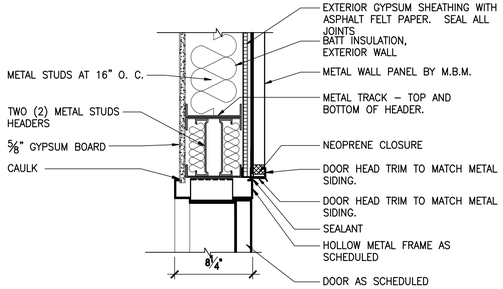

16 EXTERIOR DOOR HEAD
SCALE: 1 -1/2"= 1'-0"

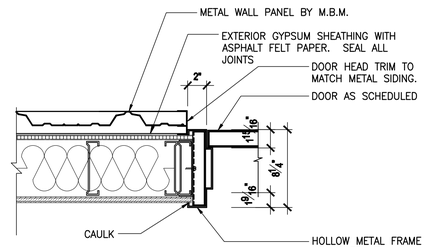

15 EXTERIOR DOOR JAMB
SCALE: 1 -1/2"= 1'-0"

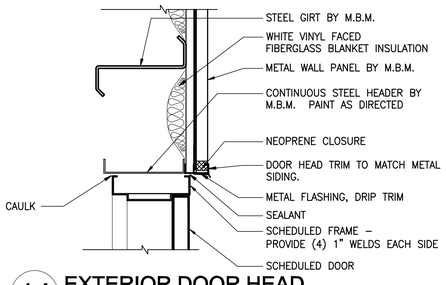

14 EXTERIOR DOOR HEAD
SCALE: 1 -1/2"= 1'-0"

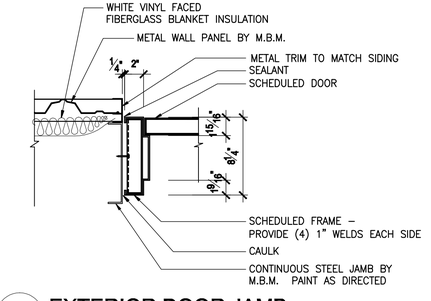

13 EXTERIOR DOOR JAMB
SCALE: 1 -1/2"= 1'-0"

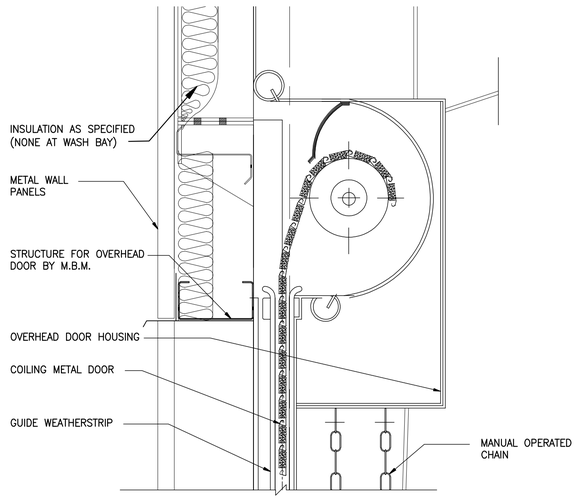

12 COILING DOOR HEAD
SCALE: 1 -1/2"= 1'-0"

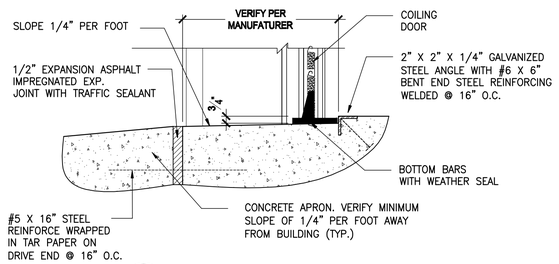

11 COILING DOOR SILL
SCALE: 1 -1/2"= 1'-0"

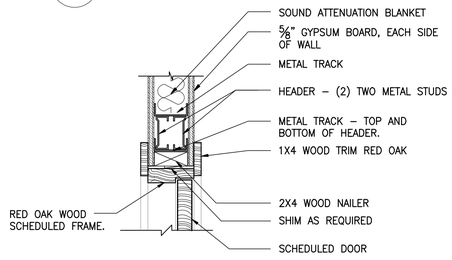

10 INTERIOR DOOR HEAD
SCALE: 1 -1/2"= 1'-0"

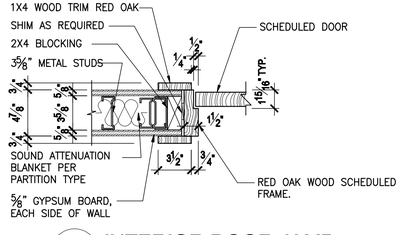

9 INTERIOR DOOR JAMB
SCALE: 1 -1/2"= 1'-0"

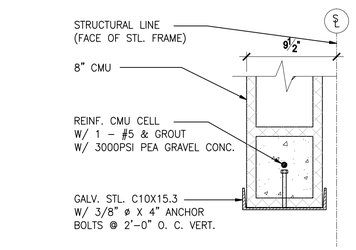

8 DOOR JAMB
SCALE:

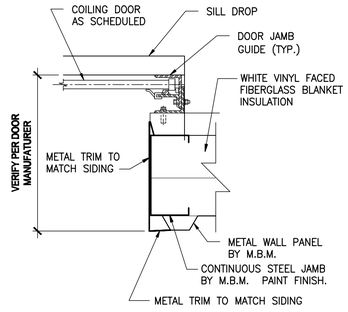

7 COILING DOOR JAMB
SCALE: 1 -1/2"= 1'-0"

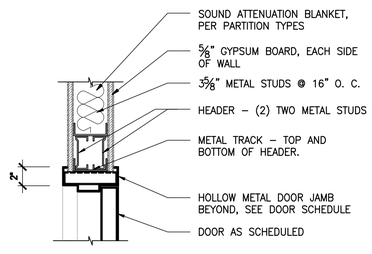

6 INTERIOR DOOR HEAD
SCALE: 1 -1/2"= 1'-0"

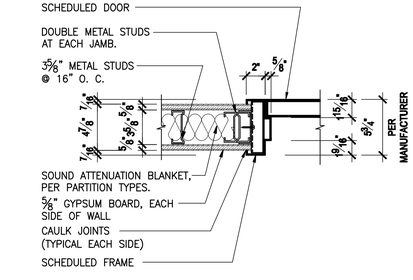

5 INTERIOR DOOR JAMB
SCALE: 1 -1/2"= 1'-0"

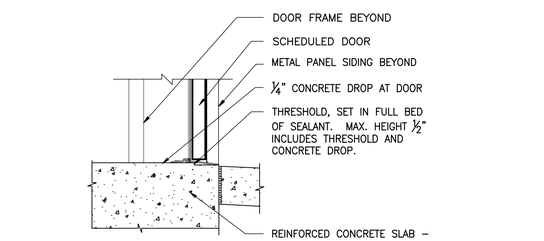

4 EXTERIOR DOOR SILL
SCALE: 1 -1/2"= 1'-0"

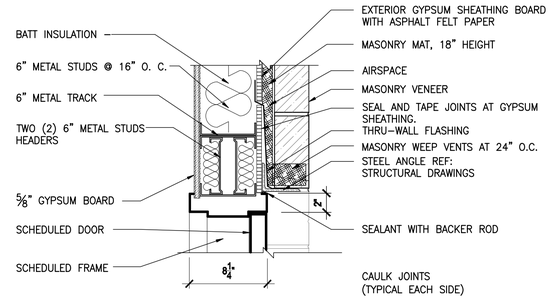

3 EXTERIOR DOOR HEAD
SCALE: 1 -1/2"= 1'-0"

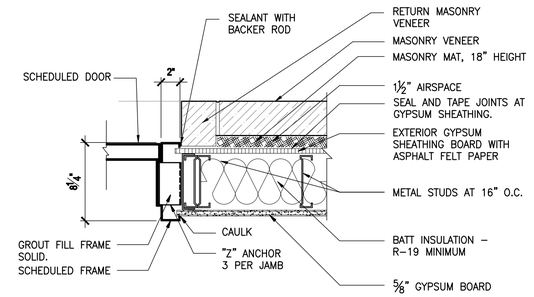

2 EXTERIOR DOOR JAMB
SCALE: 1 -1/2"= 1'-0"

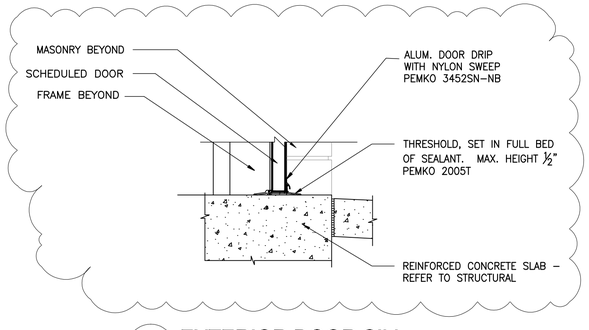

1 EXTERIOR DOOR SILL
SCALE: 1 -1/2"= 1'-0"

DOOR DETAILS

NOTE: THIS DRAWING WAS CREATED FOR PRODUCTION ON SHEET SIZE 24" X 36". DO NOT SCALE PRINTS.

CADFILE: T:\MNTPA\D\25TWC\BC4704-00-857\02-77-4704008571\Acad\prototypical pdf\Awxxx\Acad\Arch\0572_A9_3.dwg [Plotted: Fri, Aug. 07, 2009 @ 1:57 PM By: MBAZAN

Texas Department of Transportation
125 E. 11th Street
Austin, Texas 78701-2483
(512) 416-3000
Copyright © 2005 Texas Department of Transportation

THIS DOCUMENT IS RELEASED FOR THE PURPOSE OF INFORMATION ONLY NOT FOR REGULATORY APPROVAL, PERMITTING, OR CONSTRUCTION.

WACO AREA ENGINEER AND MAINTENANCE FACILITY
WACO, MCLENNAN COUNTY
WACO DISTRICT

Revisions
1 06/15/07

Drawn by: KAO/AV
Project No. CBC4704-00572
Date 05.21.2007
Sheet No.

A9.3
of 37 sheets

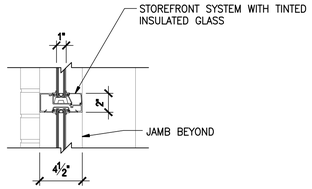

16 WINDOW MULLION DETAIL
SCALE: 1-1/2" = 1'-0"

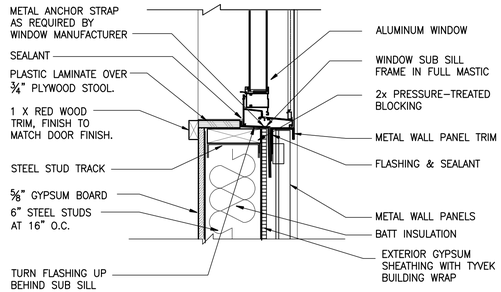

12 WINDOW JAMB
SCALE: 1-1/2" = 1'-0"

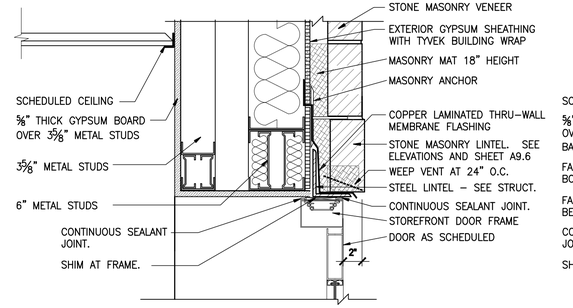

8 DOOR HEAD
SCALE: 1-1/2" = 1'-0"

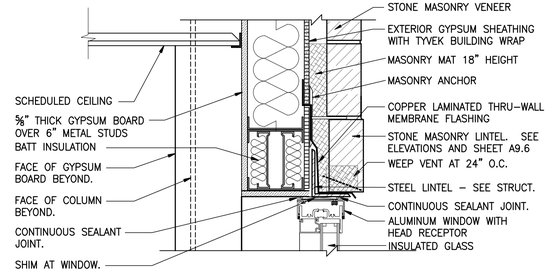

4 WINDOW HEAD
SCALE: 1-1/2" = 1'-0"

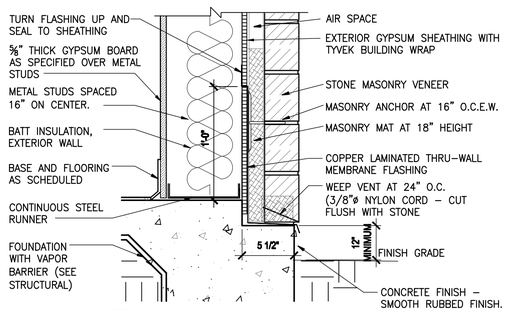

15 MASONRY BASE DETAIL
SCALE: 1-1/2" = 1'-0"

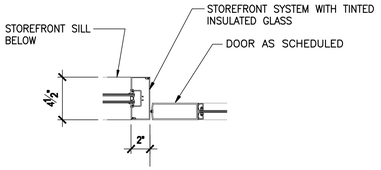

11 DOOR JAMB / HEAD SIMILAR
SCALE: 1-1/2" = 1'-0"

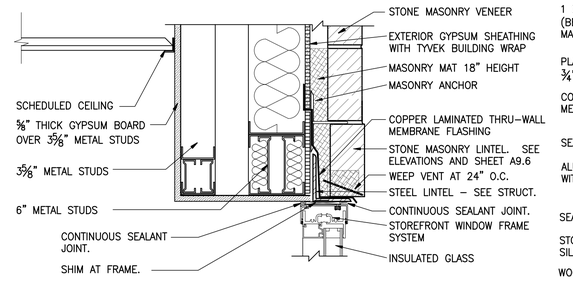

7 WINDOW HEAD
SCALE: 1-1/2" = 1'-0"

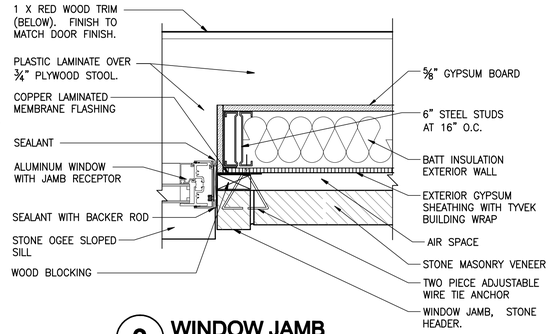

3 WINDOW JAMB
SCALE: 1-1/2" = 1'-0"

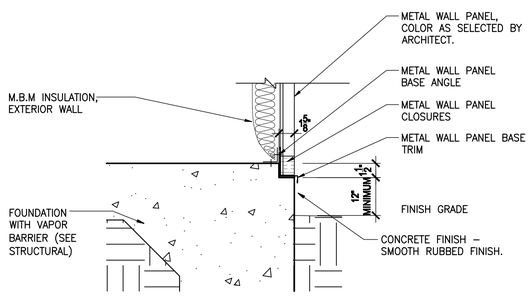

14 METAL SIDING BASE DETAIL
SCALE: 1-1/2" = 1'-0"

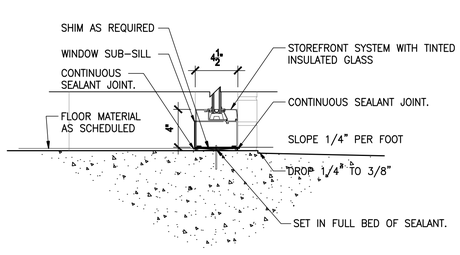

10 WINDOW SILL
SCALE: 1-1/2" = 1'-0"

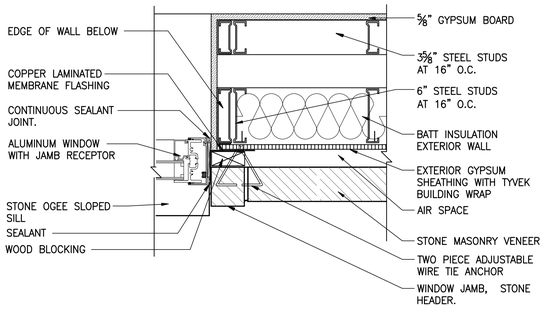

6 WINDOW JAMB
SCALE: 1-1/2" = 1'-0"

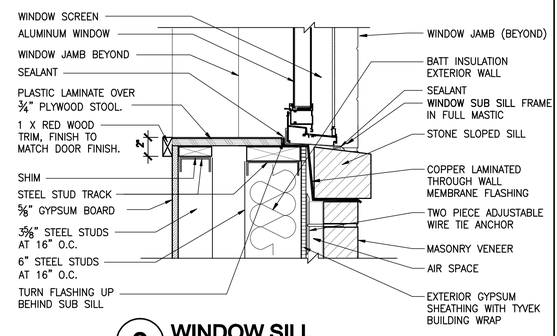

2 WINDOW SILL
SCALE: 1-1/2" = 1'-0"

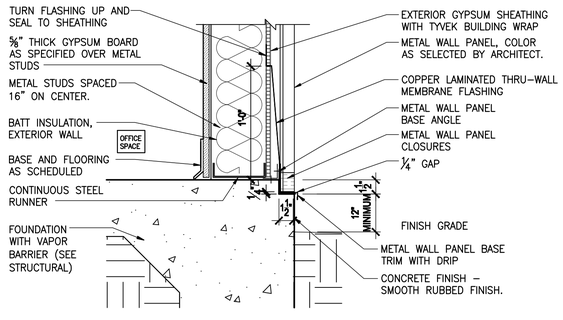

13 METAL SIDING BASE DETAIL
SCALE: 1-1/2" = 1'-0"

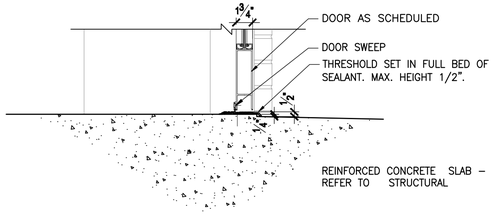

9 DOOR SILL
SCALE: 1-1/2" = 1'-0"

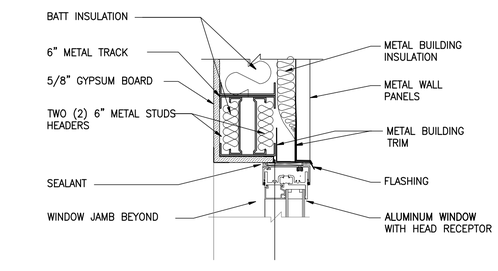

5 WINDOW HEAD
SCALE: 1-1/2" = 1'-0"

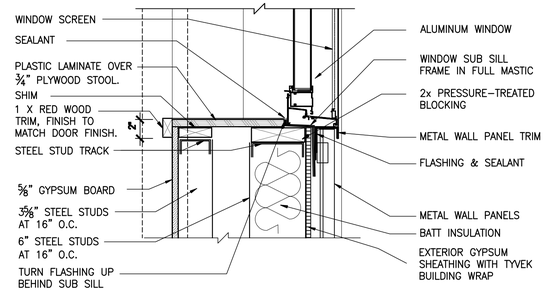

1 WINDOW SILL
SCALE: 1-1/2" = 1'-0"

WINDOW AND DOOR DETAILS

NOTE: THIS DRAWING WAS CREATED FOR PRODUCTION ON SHEET SIZE. DO NOT SCALE PRINTS.

CADFILE: T:\MAINTPAD\28FTWCBC4704-00-837\03-77-4704008371\Acad\prints\typical pdf\sheet\A\Acad\Arch\0572_A9_4.dwg Plotted: Fri, Aug. 07, 2009 @ 1:07 PM By: MBAZAN

Texas Department of Transportation
125 E. 11th Street
Austin, Texas 78701-2483
(512) 416-3000

Copyright © 2005 Texas Department of Transportation

THIS DOCUMENT IS RELEASED FOR THE PURPOSE OF INFORMATION ONLY NOT FOR REGULATORY APPROVAL, PERMITTING, OR CONSTRUCTION.

WACO AREA ENGINEER AND MAINTENANCE FACILITY
WACO, MCLENNAN COUNTY
WACO DISTRICT

Revisions

Drawn by: JOT
Project No. CBC4704-00672
Date 05.21.2007
Sheet No.

A9.4
of 37 sheets

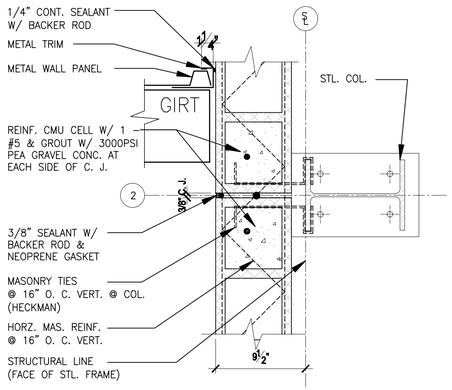

9 CONTROL JOINT AND BUTT WALL DETAIL
SCALE: 1 -1/2"= 1'-0"

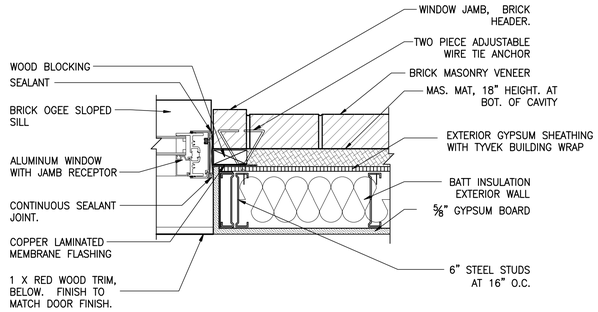

6 WINDOW SILL
SCALE: 1 -1/2"= 1'-0"

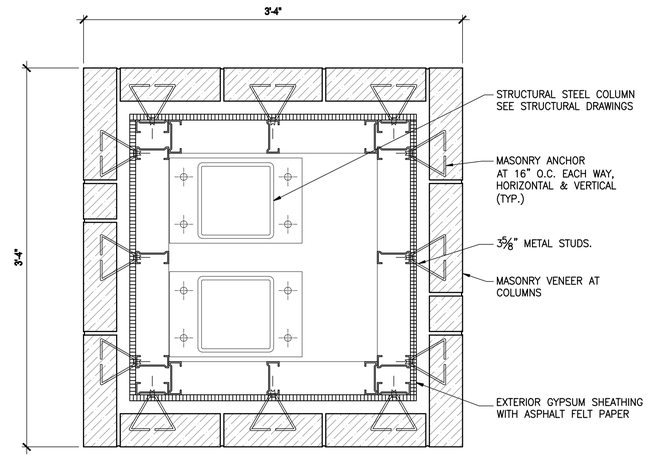

3 PLAN DETAIL
SCALE: 1 -1/2"= 1'-0"

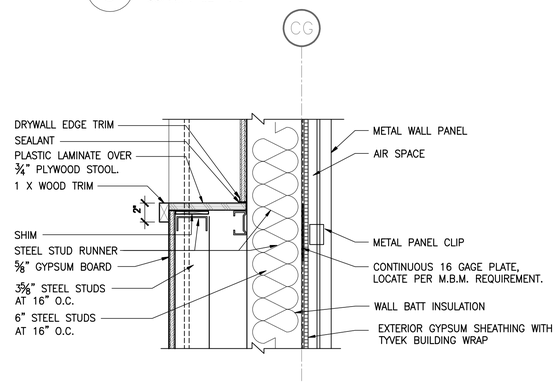

8 SILL SECTION DETAIL
SCALE: 1 -1/2"= 1'-0"

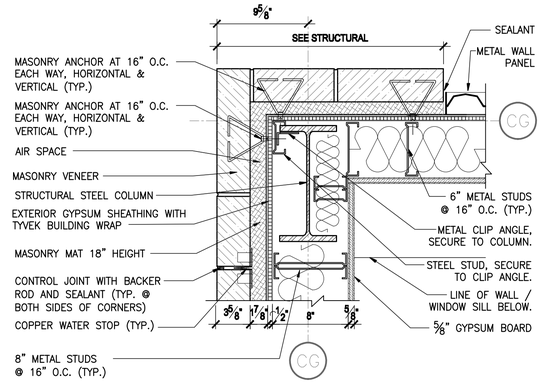

5 PLAN DETAIL
SCALE: 1 -1/2"= 1'-0"

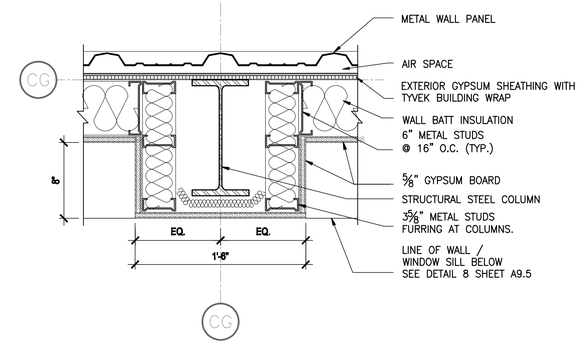

2 PLAN DETAIL
SCALE: 1 -1/2"= 1'-0"

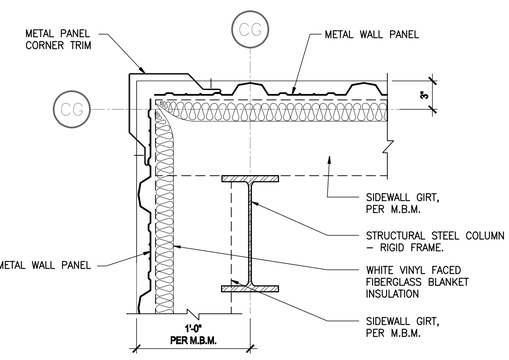

7 PLAN DETAIL
SCALE: 1 -1/2"= 1'-0"

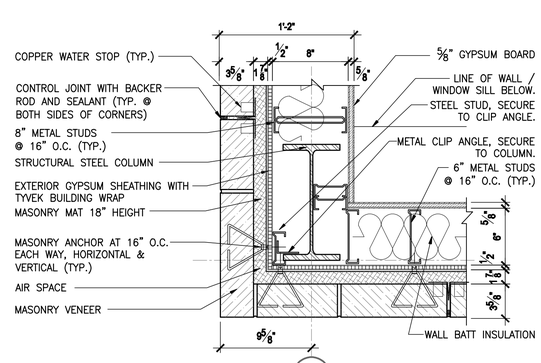

4 PLAN DETAIL
SCALE: 1 -1/2"= 1'-0"

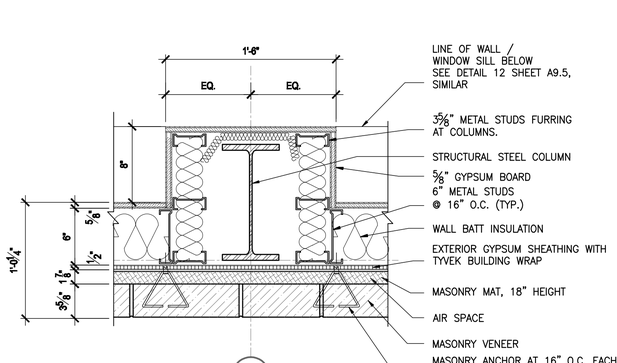

1 PLAN DETAIL
SCALE: 1 -1/2"= 1'-0"

PLAN DETAILS

NOTE: THIS DRAWING WAS CREATED FOR PRODUCTION ON 22" x 34" SHEET SIZE. DO NOT SCALE PRINTS.

Texas Department of Transportation
125 E. 11th Street
Austin, Texas 78701-2483
(512) 416-2000

Copyright © 2005 Texas Department of Transportation

THIS DOCUMENT IS RELEASED FOR THE PURPOSE OF
INFORMATION ONLY
NOT FOR REGULATORY
APPROVAL, PERMITTING,
OR CONSTRUCTION.

WACO AREA ENGINEER AND MAINTENANCE FACILITY
WACO, MCLENNAN COUNTY
WACO DISTRICT

Revisions

Drawn by: JOT/KAO
Project No. CBC4704-00672
Date 05.21.2007
Sheet No.

A9.5
of 37 sheets

CADFILE: T:\ANITA\DGN\TWC\BC4704-00-857\02-77-4704D857\Acad\dynotxt\dynotxt pdf\texas\Acad\Arch\A9572_A9_5.dwg Plotted: Fri, Aug. 07, 2009 @ 13:27 PM By: MBAZAN

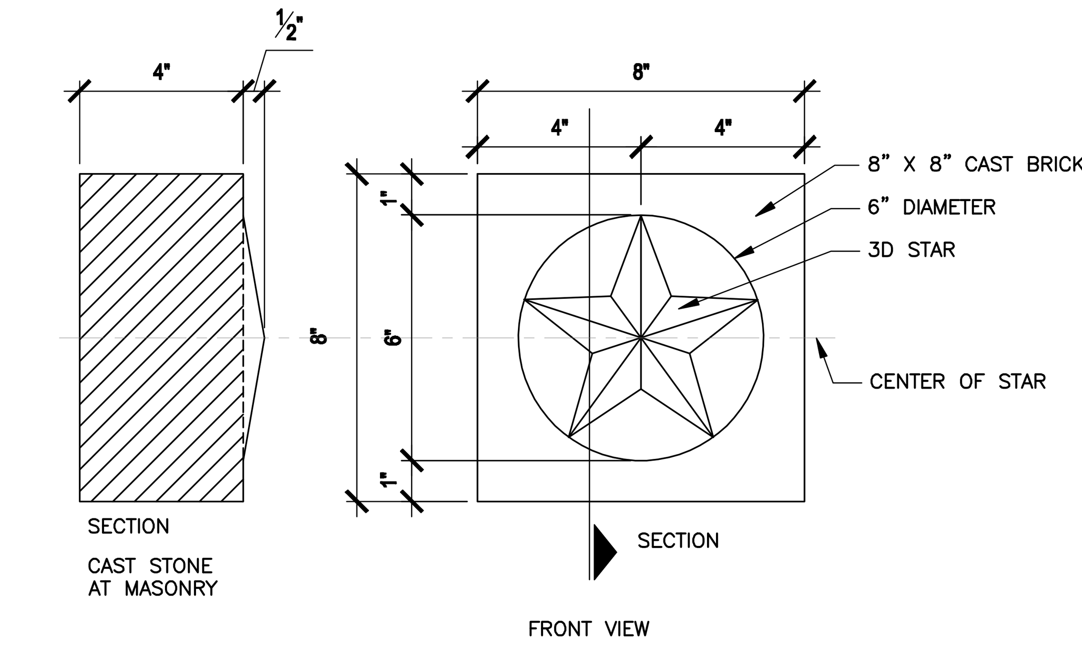

1 CAST STONE STAR ELEVATION / SECTION
SCALE: 3"= 1'-0"

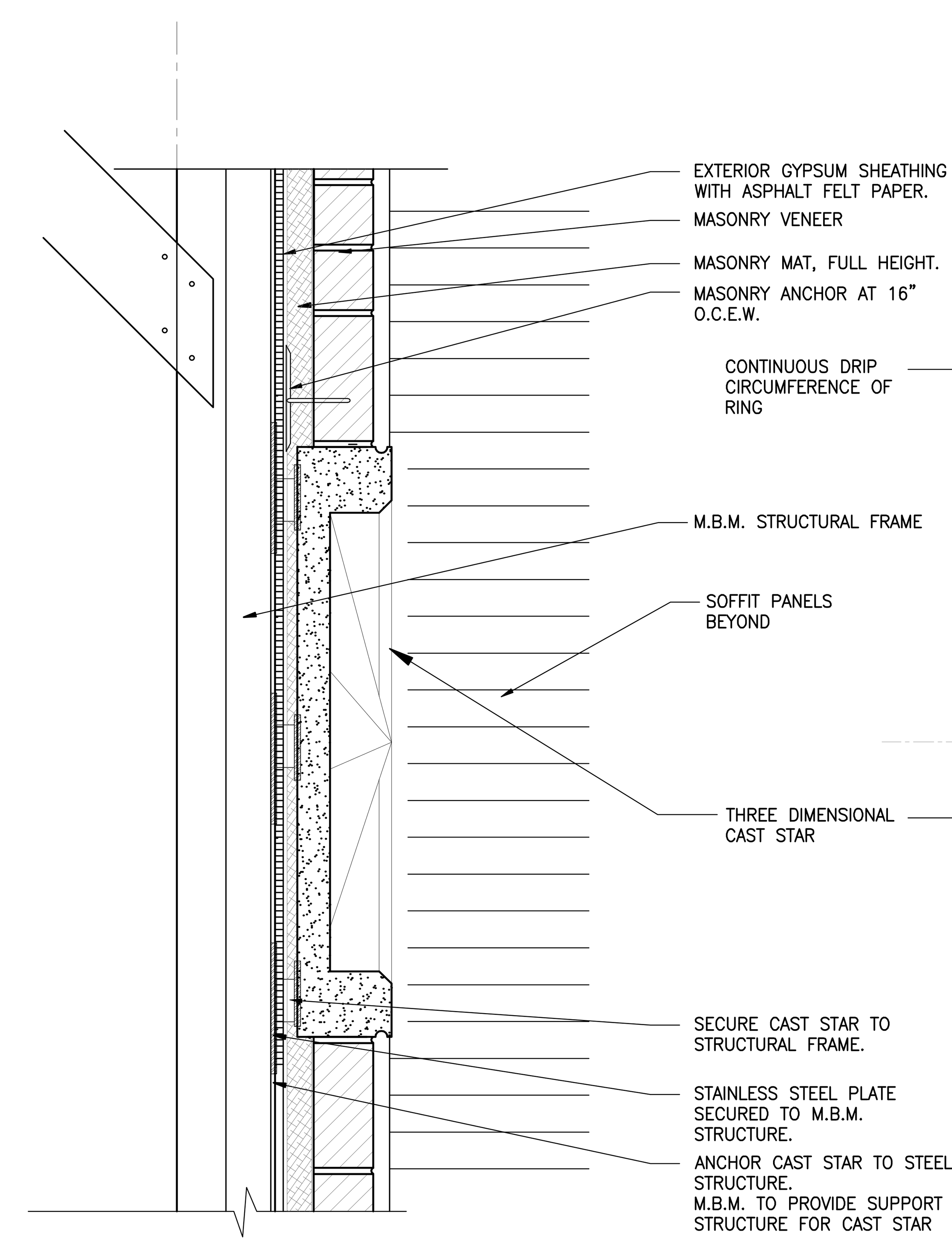

3 CAST STONE LARGE STAR DETAIL
SCALE: 1 -1/2"= 1'-0"

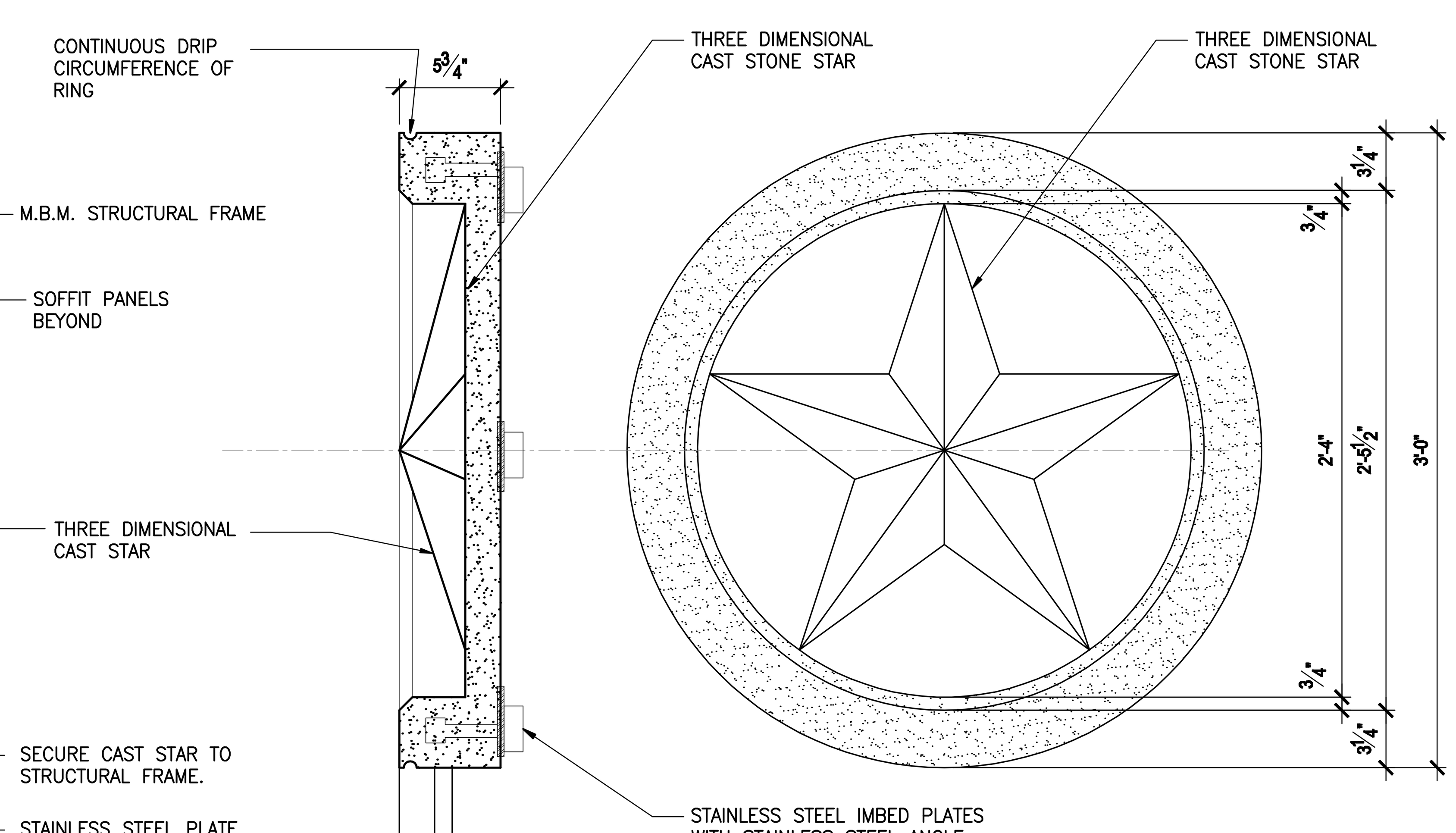

2 CAST STONE LARGE STAR ELEVATION / SECTION
SCALE: 1 -1/2"= 1'-0"

DETAILS

Texas Department of Transportation
125 E. 11th Street
Austin, Texas 78701-2483
(512) 416-2948

Copyright © 2005 Texas Department of Transportation

THIS DOCUMENT IS RELEASED FOR THE PURPOSE OF
INFORMATION ONLY
NOT FOR REGULATORY
APPROVAL, PERMITTING,
OR CONSTRUCTION.

WACO AREA ENGINEER AND MAINTENANCE FACILITY
WACO, MCLENNAN COUNTY WACO DISTRICT

Revisions

Drawn by: JOT/KAO
Project No. CBC4704-00672
Date 05.21.2007
Sheet No.

A9.6
of 37 sheets

NOTE: THIS DRAWING WAS CREATED FOR PRODUCTION ON SHEET SIZE. DO NOT SCALE PRINTS.

CADFILE: T:\MNTFMD\02FTW\CBC4704-00-837\02-77-470400837\Acad\prototypical pdfs\waco\Acad\Arch\0672_A9_6.dwg Plotted: Fri. Aug. 07, 2009 @ 1:08 PM By: MBAZAN

STRUCTURAL GENERAL NOTES

FOUNDATION NOTES :

1. REMOVE ALL VEGETATION AND TOP SOIL FROM THE BUILDING AREA. STOCKPILE TOP SOIL FOR USE AT THE END OF PROJECT. EXCAVATE THE EXISTING SUBGRADE TO A DEPTH OF 6 FEET FROM LOW POINT AND EXTEND 3 FT. BEYOND THE EXTERIOR OF THE BUILDING AREA.
2. SCARIFY, MIX 7 % LIME/CEMENT BY WT. DEPENDING ON SOIL CONDITION, AND RECOMPACT THE NEXT 8" OF SOIL TO 95 % OF MAX DENSITY PER ASTM D698. THEN BACKFILL IN 8" LIFTS USING STRUCTURAL FILL . COMPACT TO A DENSITY OF 95 % PER ASTM D698 AT MOISTURE CONTENT EQUAL TO OR GREATER THAN THE OPTIMUM MOISTURE CONTENT FOR COHESIVE FILL AND AT WORKABLE MOISTURE CONTENT FOR GRANULAR FILL.
3. STRUCTURAL FILL SHALL CONSIST OF WELL GRADED GRANULAR MATERIAL FREE OF ORGANIC MATTER AND DEBRIS. NATURALLY OR ARTIFICIALLY WELL GRADED MIXTURE OF GRAVEL, CRUSHED STONE AND SAND: ASTM D 2940 WITH AT LEAST 95 PERCENT PASSING A 1 1/2 INCH SIEVE AND NOT MORE THAN 20 % PASSING No 200 U.S. STANDARD SIEVE, AND INCLUDE ALL IN BETWEEN SIZES. A PLASTIC INDEX OF 8 T0 18 WITH A LIQUID LIMIT OF 35 OR LESS IS REQUIRED.
4. COMPACTION AND MOISTURE CONTENT OF SUBGRADE AND EACH LIFT SHALL BE MONITORED BY QC INSPECTOR.
5. ALLOWABLE BEARING = 2000 PSF.
6. FOOTING EXCAVATION SHALL BE NEAT AND FREE OF LOOSE OR WET MATERIALS.
7. PROVIDE VAPOR RETARDER SHEET BELOW ALL SLAB AREAS AS PER SPECS, WITH ALL JOINTS LAPPED 12" CONTINUOUS AND SEALED. DROP VAPOR BARRIER DOWN THE SIDES OF ALL BEAM TRENCHES. DO NOT PLACE VAPOR BARRIER ACROSS TRENCH BOTTOM.
8. IF BEARING SOILS ARE SOFTENED BY SURFACE WATER INTRUSIONS DURING EXPOSURE OR BY DESICCATION, THE UNSUITABLE SOILS MUST BE REMOVED FROM THE FOUNDATION EXCAVATION PRIOR TO PLACEMENT OF CONCRETE
9. REFER TO GEOTECHINICAL STUDY BY ETTL Project No. T507-06 DATED JULY 17, 2006 (WACO).
10. GRADE AREA AROUND BUILDING TO DRAIN WATER AWAY FROM THE STRUCTURE. FINISHED FLOOR ELEVATIONS SHALL BE MINIMUM 12" ABOVE THE FINISH GRADE.
11. REFER TO PLUMBING DRAWINGS FOR LOCATION OF ALL SLAB PENETRATIONS

APPLICABLE SPECIFICATIONS AND CODES:

CONSTRUCTION SHALL BE IN ACCORDANCE WITH THE INTERNATIONAL BUILDING CODE, IBC 2003; ACI 318-99; AISC MANUAL OF STEEL CONSTRUCTION, 9TH ED.; SPECIFICATION FOR THE DESIGN OF COLD FORMED STEEL STRUCTURAL MEMBERS AISI

REINFORCING CONCRETE NOTES:

1. CONCRETE CONSTRUCTION SHALL BE IN ACCORDANCE WITH THE AMERICAN CONCRETE INSTITUTE "BUILDING CODE REQUIREMENTS FOR REINFORCED CONCRETE," ACI 318-99.
2. ALL CONCRETE SHALL HAVE A SPECIFIED MINIMUM COMPRESSIVE STRENGTH OF 3000 P.S.I. AT 28 DAYS.
3. SLUMP 3" to 5" WITH MAX. WATER/CEMENT RATIO OF 0.45
4. PROVIDE 5 % ±1-1/2 % OF ENTRAINED AIR IN CONCRETE PERMANENTLY EXPOSED TO THE WEATHER.
5. CONSTRUCTION JOINTS AS SHOWN ON THE DRAWING. CONTRACTOR SHALL SUBMIT ANY ADDITIONAL CONSTRUCTION JOINTS FOR ENGINEER'S REVIEW.
6. EMBEDDED CONDUITS, PIPES AND SLEEVES SHALL MEET THE REQUIREMENTS OF ACI 318-99 SECT. 6.3. INCLUDING THE FOLLOWING:
   - A. CONDUITS AND PIPES EMBEDDED WITHIN A SLAB, WALL, OR BEAM (OTHER THAN THOSE PASSING THROUGH) SHALL NOT BE LARGER IN OUTSIDE DIMENSION THAN 1/3 THE OVERALL THICKNESS OF THE SLAB, WALL OR BEAM IN WHICH THEY ARE EMBEDDED.
   - B. CONDUITS, PIPES AND SLEEVES SHALL NOT BE SPACED CLOSER THAN THREE DIAMETERS OR WIDTHS ON CENTER.
   - C. EMBEDDED CONDUITS, PIPES AND SLEEVES SHALL BE OF UNCOATED OR GALVANIZED IRON OR STEEL NOT THINNER THAN STANDARD SCHEDULE 40 STEEL PIPE.
7. REINFORCING STEEL SHALL BE DEFORMED BARS IN CONFORMANCE WITH ASTM A615 GRADE 60.
8. DETAILING OF REINFORCING STEEL IN ACCORDANCE WITH ACI DETAILING MANUAL
9. MIN. LAP 40 X BAR DIA. (NOMINAL)
10. STEEL CLEAR COVER:
    GRADE BEAM.- 1-1/2" TOP, 3" BOTTOM , AND 2" SIDE (FORMED). 3" SIDE (PLACE AGAINST EARTH)
    SLAB ON GRADE.- 2" TOP
11. USE WATER CURING FOR CONCRETE
12. PROVIDE CORNER AND INTERSECTION REINFORCEMENT AS SHOWN IN STD. DETAIL 10/S3.3, 14/S3.3
13. CONCRETE DESIGNED TO BE PUMPED SHALL BE SO NOTED ON THE MIX DESIGNS AND SHALL HAVE MIX PROPORTIONS COMPATIBLE WITH THE PUMPING PROCESS.
14. ALL MAJOR DEFECTIVE AREAS IN CONCRETE INCLUDING HONEYCOMBS, CRACKS IN EXCESS OF 0.01", AND SPALLS THAT OCCUR IN LOAD CARRYING MEMBERS VITAL TO STRUCTURAL INTEGRITY SHALL BE REPAIRED USING EPOXY ADHESIVE, EPOXY MORTAR AND/OR POLYMER CONCRETE. EXTENT AND DETERMINATION OF MAJOR DEFECTIVE AREAS SHALL BE DETERMINED BY THE ENGINEER.
15. REFER TO TxDOT STANDARD 1993 SPECIFICATIONS FOR CURING, FINISHES AND REBAR PREPARATION
16. PROVIDE #5 DOWELS AT 16" O. C. 1'-4" LONG BETWEEN SIDEWALKS AND FOUNDATION. WRAP ONE END WITH 30# FELP PAPER REFER TO SITE PLAN FOR LOCATION OF SIDEWALKS.
17. GRADE BEAM SHALL HAVE A MINIMUM OF 18" INTO THE GROUND, FROM FINISHED GRADE TO BOTTOM OF BEAM. REFER TO CIVIL GRADING PLAN FOR FINISH GRADE ELEVATIONS.

CONCRETE FORMWORK

1. THE DESIGN, CONSTRUCTION, AND SAFETY OF ALL FORM WORK SHALL BE THE RESPONSIBILITY OF THE GENERAL CONTRACTOR. ALL FORMS, SHORES, BACK SHORES, FALSEWORK, BRACING, AND OTHER TEMPORARY SUPPORTS SHALL BE ENGINEERED TO SUPPORT ALL LOADS IMPOSED INCLUDING THE WET WEIGHT OF CONCRETE, CONSTRUCTION EQUIPMENT, LIVE LOADS, LATERAL LOADS DUE TO WIND AND WET UNBALANCED CONCRETE. THE CONTRACTOR SHALL ALSO BE RESPONSIBLE FOR DETERMINING WHEN TEMPORARY SUPPORTS, SHORES, BACKSHORING, AND OTHER BRACING SHALL BE SAFELY REMOVED.

STEEL FRAMING NOTES

1. STRUCTURAL STEEL SHALL CONFORM TO ASTM A36. STRUCTURAL TUBING SHALL CONFORM TO ASTM A500, GRADE B, Fy = 46 KSI. CONNECTIONS SHALL CONFORM TO REQUIREMENTS OF AISC.
2. CONNECTIONS SHALL BE ASTM A325 BOLTS OR WELDED TO CARRY THE TABULATED AISC CAPACITY FOR THE SPAN OF THE MEMBER
3. COLUMN BASE PLATES SHALL BE SET TO THE ELEVATION INDICATED ON THE DRAWINGS AND LEVELED USING STEEL SHIMS OR BY DOUBLE NUTS ON ANCHOR BOLTS. BASE PLATES SHALL THEN BE GROUTED WITH A MINIMUM 1" OF NON-SHRINK, HIGH STRENGTH NONMETALLIC GROUT. TIGHTEN ANCHOR BOLTS AFTER SUPPORTED MEMBERS HAVE BEEN POSITIONED AND PLUMBED.
4. WHERE METAL DECK IS SUPPORTED CONTINUOUSLY AT EDGES, WELD DECK TO STEEL SUPPORT AT 12" O. C. OR USE #12 SDS
5. ROOF DECK IS 1½" - 22 GAUGE TYPE F INTERMEDIATE RIB DECK COMPLYING WITH STEEL DECK INSTITUTE WITH MINIMUM I = 120 IN^4, SN = 120 IN^3 ATTACH TO SUPPORTING MEMBERS BY PLUG WELDING DIRECTLY THROUGH BOTTOM OF THE RIBS AT EVERY SUPPORT OR USE #12 SDS. WELD EACH SHEET AT BOTH SIDES SO THAT SPACING BETWEEN WELDS ACROSS THE WIDTH OF EACH SHEET DOES NOT EXCEED 18", IN ACCORDANCE WITH STEEL DECK INSTITUTE'S SPECIFICATIONS
6. FIELD CUTTING OF STRUCTURAL STEEL OR ANY FIELD MODIFICATION TO STRUCTURAL STEEL SHALL NOT BE MADE WITHOUT APPROVAL OF THE ENGINEER.

LIGHT GAGE STEEL FRAMING

1. LIGHT GAGE STEEL BASED ON USG STEEL FRAMING SYSTEMSOR APPROVED EQUIVALENT
2. FRAMING MEMBERS SHALL BE AS NOTED WITH STEEL BLOCKING AT MIDHEIGHT FOR WALLS GREATER THAN 8'-6" IN HEIGHT. EXTERIOR WALLS 6" STEEL STUDS 20 GA. INTERIOR WALLS 3 ⅝" & 6" STEEL STUDS 20 GA.
3. ALL MEMBERS SHALL BE FORMED FROM STEEL HAVING A MINIMUM YIELD STRENGTH OF 40 KSI.
4. ALL TRACK AND PERIMETER CHANNEL SHALL BE UNPUNCHED, NOMINALLY THE SAME SIZE AND GAGE AS THE STUD UNO.

PRE-ENGINEERED METAL BUILDING

1. THE DESIGN OF THE STRUCTURE SYSTEM SHALL BE CLEAR RIGID FRAME WITH STRAIGHT COLUMNS AND ROOF BEAMS WITH A STANDING SEAM ROOF AND EXPANSION CLIPS.
2. ACTUAL BUILDING LENGTH SHALL BE STRUCTURAL LINE TO STRUCTURAL LINE, AND SHALL BE THE SAME AS NOMINAL LENGTH.
3. ACTUAL BUILDING WIDTH SHALL BE STRUCTURAL LINE TO STRUCTURAL LINE AND SHALL BE NOMINAL BUILDING WIDTH
4. REFER TO BUILDING ELEVATIONS FOR ROOF SLOPE
5. SEALED SHOP DRAWINGS AND CALCULATIONS FOR METAL BUILDING WITH PORCH SHALL BE SUBMITTED FOR ENGINEER'S APPROVAL
6. ALL COMPONENTS AND PARTS OF THE STRUCTURAL SYSTEM SHALL BE AS INDICATED ON THE DRAWING AND/OR SPECIFICATIONS.
7. ALL MODIFICATIONS WILL REQUIRE ENGINEER'S REVIEW.
8. ALL REACTIONS FOR FOUNDATION DESIGN SHALL BE SUPPLIED BY PRE-ENGINEERED BUILDING MANUFACTURER. NUMBER OF ANCHOR BOLTS AND DIAMETER SHALL BE SPECIFIED BY BUILDING MANUFACTURER.
9. FOUNDATION DESIGN WILL BE PROVIDED BY OWNER
10. BUILDING SHALL BE PRODUCED IN A MANUFACTURING FACILITY THAT IS CERTIFIED BY AISC- CATEGORY MB.
11. ALL STRUCTURAL MILL SECTIONS OR WELDED PLATE SECTIONS SHALL BE DESIGNED IN ACCORDANCE WITH AISC SPECIFICATION FOR THE DESIGN FABRICATION AND ERECTION OF STRUCTURAL STEEL FOR BUILDINGS AND ALL COLD FORMED STEEL MEMBERS SHALL BE IN ACCORDANCE WITH THE AISI LATEST EDITION.
12. THE STRUCTURAL SYSTEM WILL BE DESIGNED IN ACCORDANCE WITH IBC 2003 AND THE REQUIREMENTS OF THE LOCAL CITY/TOWN

    DEAD LOAD — ACTUAL WEIGHT OF MATERIALS
    LIVE LOAD ROOF — 20 PSF
    WIND — 120 MPH EXPOSURE C
    SNOW — ___ AS PER CODE
    MECHANICAL AND OTHER ATTACHMENTS TO ROOF 10 PSF
    WEIGHT OF MAJOR EQUIPMENT SHALL BE CONSIDERED INDIVIDUALLY
13. WELDING SHALL CONFORM TO AWS D1.1

COORDINATION

1. IT IS THE RESPONSIBILITY OF THE GENERAL CONTRACTOR TO OBTAIN ALL CONTRACT DOCUMENTS AND LATEST ADDENDA AND TO SUBMIT SUCH DOCUMENTS TO ALL SUBCONTRACTORS AND MATERIAL SUPPLIERS PRIOR TO THE SUBMITTAL OF SHOP DRAWINGS, FABRICATION OF ANY STRUCTURAL MEMBERS, AND CONSTRUCTION.
2. THE GENERAL CONTRACTOR SHALL COMPARE THE ARCHITECTURAL, STRUCTURAL AND MECHANICAL DRAWINGS AND REPORT ANY DISCREPANCY BETWEEN EACH SET OF DRAWINGS AND WITHIN EACH SET OF DRAWINGS TO THE ARCHITECT AND ENGINEER PRIOR TO THE FABRICATION AND INSTALLATION OF ANY STRUCTURAL MEMBERS.
3. ONLY LARGER SLEEVE OPENINGS AND FRAMED OPENINGS IN STRUCTURAL FRAMING COMPONENT MEMBERS ARE INDICATED ON THE STRUCTURAL DRAWINGS. HOWEVER, ALL SLEEVES, INSERTS AND OPENINGS, INCLUDING FRAMES AND/OR SLEEVES SHALL BE PROVIDED FOR PASSAGE, PROVISION AND/OR INCORPORATION OF THE WORK OF THE CONTRACT, INCLUDING BUT NOT LIMITED TO MECHANICAL, ELECTRICAL AND PLUMBING WORK. THIS WORK SHALL INCLUDE THE COORDINATION OF SIZES, ALIGNMENT, DIMENSIONS, POSITION, LOCATIONS, ELEVATIONS AND GRADES AS REQUIRED TO SERVE THE INTENDED PURPOSE. OPENINGS NOT INDICATED ON THE STRUCTURAL DRAWINGS, BUT REQUIRED AS NOTED ABOVE, SHALL BE SUBMITTED TO THE ENGINEER FOR REVIEW.
4. REFER TO ARCHITECTURAL, MECHANICAL, ELECTRICAL AND PLUMBING DRAWINGS FOR FLOOR ELEVATIONS, SLOPES, DRAINS AND LOCATION OF DEPRESSED AND ELEVATED FLOOR AREAS.
5. COMPATIBILITY OF THE STRUCTURE AND PROVISIONS FOR BUILDING EQUIPMENT SUPPORTED ON OR FROM STRUCTURAL COMPONENTS SHALL BE VERIFIED AS TO SIZE, DIMENSIONS, CLEARANCES, ACCESSIBILITY, WEIGHTS AND REACTION WITH THE EQUIPMENT FOR WHICH THE STRUCTURE HAS BEEN DESIGNED PRIOR TO SUBMISSION OF SHOP DRAWINGS AND DATA FOR EACH PIECE OF EQUIPMENT AND FOR STRUCTURAL COMPONENTS. DIFFERENCES SHALL BE NOTED ON THE SUBMITTALS. SUCH DETAILS SHALL APPLY WHETHER OR NOT THEY ARE KEYED IN AT EACH LOCATION. QUESTIONS REGARDING APPLICABILITY OF TYPICAL DETAILS SHALL BE DETERMINED BY THE ENGINEER.
6. SHOP DRAWINGS SHALL BE PREPARED FOR ALL STRUCTURAL ITEMS AND SUBMITTED FOR REVIEW BY THE ENGINEER. CONTRACT DRAWINGS SHALL NOT BE REPRODUCED AND USED AS SHOP DRAWINGS. ALL ITEMS DEVIATING FROM THE CONTRACT DRAWINGS OR FROM PREVIOUSLY SUBMITTED SHOP DRAWINGS SHALL BE CLOUDED.
7. THE DETAILS DESIGNATED AS "TYPICAL DETAILS" APPLY GENERALLY TO THE DRAWINGS IN ALL AREAS WHERE CONDITIONS ARE SIMILAR TO THOSE DESCRIBED IN THE DETAILS.
8. ALL DIMENSIONS AND CONDITIONS OF EXISTING CONSTRUCTION SHALL BE VERIFIED BY THE CONTRACTOR AT THE JOB SITE. DIFFERENCES BETWEEN EXISTING CONSTRUCTION AND THE DRAWINGS SHALL BE REFERRED TO THE ARCHITECT. DIFFERENCES SHALL ALSO BE CLOUDED ON THE SHOP DRAWINGS.
9. THE DESIGN AND PROVISION OF ALL TEMPORARY SUPPORTS SUCH AS GUYS, BRACES, FALSEWORK, SUPPORTS AND ANCHORS FOR SAFETY LINES, CRIBBING OR ANY OTHER TEMPORARY ELEMENTS REQUIRED FOR THE EXECUTION OF THE CONTRACT ARE NOT INCLUDED IN THE DRAWINGS AND SHALL BE THE RESPONSIBILITY OF THE CONTRACTOR. TEMPORARY SUPPORTS SHALL NOT RESULT IN THE OVER STRESS OR DAMAGE OF THE ELEMENTS TO BE BRACED NOR ANY ELEMENTS USED AS BRACE SUPPORTS.
10. THE CONTRACT STRUCTURAL DRAWINGS AND SPECIFICATIONS REPRESENT THE FINISHED STRUCTURE, EXCEPT WHERE SPECIFICALLY SHOWN, AND DO NOT INDICATE THE METHOD OR MEANS OF CONSTRUCTION. THE CONTRACTOR SHALL SUPERVISE AND DIRECT THE WORK AND SHALL BE SOLELY RESPONSIBLE FOR ALL CONSTRUCTION MEANS, METHODS, PROCEDURES, TECHNIQUES, AND SEQUENCE.
11. THE ENGINEER SHALL NOT HAVE CONTROL OF, AND SHALL NOT BE RESPONSIBLE FOR, CONSTRUCTION MEANS, METHODS, TECHNIQUES, SEQUENCES, OR PROCEDURES, FOR SAFETY PRECAUTIONS AND PROGRAMS IN CONNECTION WITH THE WORK, FOR THE ACTS OR OMISSION OF THE CONTRACTOR, SUBCONTRACTOR, OR ANY OTHER PERSONS PERFORMING ANY OF THE WORK, OR FOR THE FAILURE OF ANY OF THEM TO CARRY OUT THE WORK IN ACCORDANCE WITH THE CONTRACT DOCUMENTS.
12. PERIODIC SITE OBSERVATION BY FIELD REPRESENTATIVES OF TXDOT IS SOLELY FOR THE PURPOSE OF DETERMINING IF THE WORK OF THE CONTRACTOR IS PROCEEDING IN ACCORDANCE WITH THE STRUCTURAL CONTRACT DOCUMENTS. THIS LIMITED SITE OBSERVATION IS NOT INTENDED TO BE AN EXHAUSTIVE CHECK OF THE QUALITY OR QUANTITY OF THE WORK, BUT RATHER PERIODIC IN AN EFFORT TO INFORM THE OWNER AGAINST DEFECTS AND DEFICIENCIES IN THE WORK OF THE CONTRACTOR.

STRUCTURAL MASONRY

1. CONCRETE MASONRY UNITS SHALL BE LIGHTWEIGHT HOLLOW LOAD BEARING TYPE N-1 UNITS WHICH CONFORM TO ASTM C90.
2. MINIMUM COMPRESSIVE PRISM STRENGTH OF THE MASONRY (F'm) SHALL BE 1500 POUNDS PER SQUARE INCH WHEN TESTED AT 28 DAYS. PROVIDE PRISM TESTS FOR EACH 5000 SQUARE FEET OF WALL IN ACCORDANCE WITH ASTM E447 METHOD B.
3. CHASES SHALL BE BUILT IN AND NOT CUT IN. CHASES SHALL BE PLUMB AND SHALL BE MINIMUM ONE-UNIT LENGTH FROM JAMBS OF OPENINGS. ANCHORS, WALL PLUGS, ACCESSORIES AND OTHER ITEMS TO BE BUILT IN SHALL BE INSTALLED AS THE MASONRY WORK PROGRESSES. ALL CUTTING AND FITTING OF MASONRY, INCLUDING THAT REQUIRED TO ACCOMMODATE THE WORK OF OTHER SECTIONS SHALL BE DONE BY MASONS WITH MASONRY SAWS.
4. MORTAR SHALL CONFORM TO ASTM C270, TYPE S, WITH A MINIMUM COMPRESSIVE STRENGTH OF 1800 PSI WHEN TESTED IN ACCORDANCE WITH ASTM C780. MORTAR IN CONTACT WITH EARTH SHALL BE TYPE M. MASONRY CEMENT SHALL NOT BE USED.
5. REINFORCE CONCRETE MASONRY UNITS WITH LADDER TYPE HOT DIP GALVANIZED (ASTM A153, CLASS B-2 COATING) COLD-DRAWN STEEL CONFORMING TO ANSI/ASTM A82, WITH (NO. 9 GAUGE OR 3/16 INCH) SIDE RODS WITH NO. 9 GAUGE CROSS RODS. SPACE JOINT REINFORCING AT 16" ON CENTER, UNLESS NOTED OTHERWISE. LAP JOINT REINFORCING 14" AT SPLICES. JOINT REINFORCING SHALL BE DISCONTINUOUS AT CONTROL AND EXPANSION JOINTS.
6. PROVIDE REINFORCED AND GROUTED VERTICAL CELLS AS NOTED ON THE DRAWINGS. GROUT AND REINFORCE THE FIRST CELL AT THE ENDS OF WALLS AND AT CORNERS.
7. REINFORCE EACH CELL OF CONCRETE MASONRY UNITS EACH SIDE OF FRAMED OPENINGS WITH 1-#4 VERTICAL. GROUT CELL FULL HEIGHT OF WALL.
8. LAP REINFORCING BARS IN GROUTED MASONRY 40 BAR DIAMETERS MINIMUM, UNLESS NOTED OTHERWISE. EXCEPT AT FOUNDATIONS, SPLICES IN REINFORCING SHALL BE STAGGERED SO THAT NOT MORE THAN 1/2 OF ALL BARS ARE SPLICED AT THE SAME LOCATION.
9. SEE ARCHITECT'S DRAWINGS FOR VERTICAL HEIGHT OF MASONRY WALLS.
10. ALL MASONRY WALLS SHOWN ON THE ARCHITECTURAL AND STRUCTURAL DRAWINGS HAVE BEEN DESIGNED TO RESIST THE PRESCRIBED CODE VERTICAL AND LATERAL LOADS APPLIED TO THEM IN THE FINAL DESIGN ONLY ASSUMING FULL BRACING TOP, BOTTOM, AND/OR SIDE OF WALL AS SHOWN. IT IS THE RESPONSIBILITY OF THE CONTRACTOR TO PROPERLY AND ADEQUATELY BRACE ALL MASONRY WALLS AT ALL STAGES DURING CONSTRUCTION TO RESIST ERECTION LOADS AND LATERAL LOADS OCCURRING DURING CONSTRUCTION.
11. PLACEMENT OF REINFORCING STEEL:
    - A. VERTICAL BARS SHALL BE HELD IN POSITION AT THE TOP AND BOTTOM AND AT INTERVALS NOT EXCEEDING 6'-0" WITH A MINIMUM CLEARANCE OF 1/4" FROM THE FACE OF THE MASONRY AND NOT LESS THAN ONE BAR DIAMETER OR 1" (WHICHEVER IS GREATER) BETWEEN ADJACENT BARS.
    - B. ALL DOWELS SHALL BE GROUTED INTO A CELL THAT LAPS THE VERTICAL STEEL. WHEN A FOUNDATION DOWEL DOES NOT LINE UP WITH A CORRESPONDING VERTICAL BAR, IT SHALL BE SLOPED NOT MORE THAN ONE HORIZONTAL TO SIX VERTICAL.
    - C. ALL HORIZONTAL REINFORCING STEEL SHALL BE PLACED IN CONTINUOUS BOND BEAM OR LINTEL BLOCK UNITS AND SHALL BE SOLIDLY GROUTED IN PLACE. MAINTAIN A MINIMUM OF ONE BAR DIAMETER OR 1"(WHICHEVER IS GREATER) CLEARANCE BETWEEN ADJACENT BARS AND A MINIMUM OF 1/4" CLEARANCE FROM THE FACE OF THE MASONRY.
12. REFER TO ARCHITECTURAL DRAWINGS FOR ADDITIONAL BOUND BEAM. PROVIDE ADDITIONAL BOUND BEAMS SHOWN ON THE ARCHITECTURAL DRAWINGS EVEN THOUGH THEY MAY NOT BE SHOWN ON THE STRUCTURAL DRAWINGS.

SCHEDULE OF ABBREVIATIONS

A
ACI — AMERICAN CONCRETE INSTITUTE
ADD'L — ADDITIONAL
AISC — AMERICAN INSTITUTE OF STEEL CONSTRUCTION
ASTM — AMERICAN SOCIETY FOR TESTING OF MATERIALS
AWS — AMERICAN WELDING SOCIETY

B
BLDG — BUILDING
BM — BENCH MARK OR BEAM
BOT — BOTTOM

C
CJ — CONTROL JOINT
CL — CENTERLINE
COL — COLUMN
CONC — CONCRETE
CONT — CONTINUOUS

D
DIA — DIAMETER
DWL — DOWEL

E
E — EAST
EA — EACH
EF — EACH FACE
EJ — EXPANSION JOINT
EW — EACH WAY
EXIST — EXISTING
EXT — EXTERIOR

F
FDN — FOUNDATION
FF — FINISH FLOOR

G
GA — GAUGE (GAGE)
GALV. — GALVANIZED
GR — GRADE

H
HB — HOSE BIBB
HD — HOT DIPPED
HP — HIGH POINT
HORIZ — HORIZONTAL
HT — HEIGHT

I
INSUL — INSULATION
IBC — INTERNATIONAL BUILDING CODE
INT — INTERIOR

J
J — JUNCTION
JB — JUNCTION BOX
JT — JOINT

K
KSI — THOUSAND POUNDS PER SQUARE INCH

L
L — LENGTH
LL — LIVE LOAD
LLH — LONG LEG HORIZONTAL
LP — LOW POINT
LVL — LEVEL

M
M — MOTOR
MAT'L — MATERIAL
MAX — MAXIMUM
MIN — MINIMUM
MPH — MILES PER HOUR
MTL — METAL

N
N — NORTH
NO — NUMBER
NTS — NOT TO SCALE

O
OC — ON CENTER
OH — OVERHEAD
OSL — OUTSIDE

P
PART — PARTITION
PI — PLASTICITY INDEX
PSF — POUNDS PER SQUARE FOOT
PSI — POUNDS PER SQUARE INCH
PT — POINT

Q
QC — QUALITY CONTROL

R
REF — REFERENCE
REINF — REINFORCING OR (REINFORCED)
REQ'D — REQUIRED

S
S — SOUTH
SDS — SELF DRILLING SCREW
SPEC — SPECIFICATION
STD — STANDARD
STL — STEEL
STR — STRUCTURAL

T
T&B — TOP AND BOTTOM
TxDOT — TEXAS DEPARTMENT OF TRANSPORTATION
TYP — TYPICAL

U
UNO — UNLESS NOTED OTHERWISE

V
VERT — VERTICAL

W
W — WIDTH, WASTE OR WEST
W/ — WITH
WT — WEIGHT

SYMBOLS

Ø DIAMETER

* CONTRACTOR MAY ADJUST THIS DIMENSION TO SUIT PREFABRICATED METAL BLDG. WALL PANELS

X / AX.X — FLOOR OR FOUNDATION DETAIL NUMBER

X/SX.X — FOUNDATION SECTION MARK

DETAIL SECTION MARK

SLOPE ARROW

STEEL LINTEL SCHEDULE

SIZE	CLEAR OPENING	REMARKS	DETAIL
L 4 X 4 X 3/8	0'-0" UP TO 8'-0"	MIN. OF 8" BEARING @ EA. END	
L 6 X 4 X 3/8	8'-0" UP TO 11'-0"	MIN. OF 8" BEARING @ EA. END	
⅃L L 7 X 4 X 3/8	11'-0" UP TO 16'-0"	MIN. OF 8" BEARING @ EA. END	

STRUCTURAL NOTES

NOTE: THIS DRAWING WAS CREATED FOR PRODUCTION ON 22" x 34" SHEET SIZE. DO NOT SCALE PRINTS.

CADFILE: T:\MNTFMD02FTWCBC4704-00-837\02-77-4704006?\Acad\prototypical pdfs\waco\Acad\Struct\672_S1_1.dwg Plotted: Fri. Aug. 07, 2009 @ 1:45 PM By: MBAZAN

Texas Department of Transportation
125 E. 11th Street
Austin, Texas 78701-2483
(512) 416-3046
Copyright © 2005 Texas Department of Transportation

THIS DOCUMENT IS RELEASED FOR THE PURPOSE OF INFORMATION ONLY
NOT FOR REGULATORY APPROVAL, PERMITTING, OR CONSTRUCTION.

WACO AREA ENGINEER AND MAINTENANCE FACILITY
WACO, MCLENNAN COUNTY
WACO DISTRICT

Revisions

Drawn by: S. F.
Project No. CBC4704-00672
Date 05.21.2007
Sheet No. S1.1
of sheets

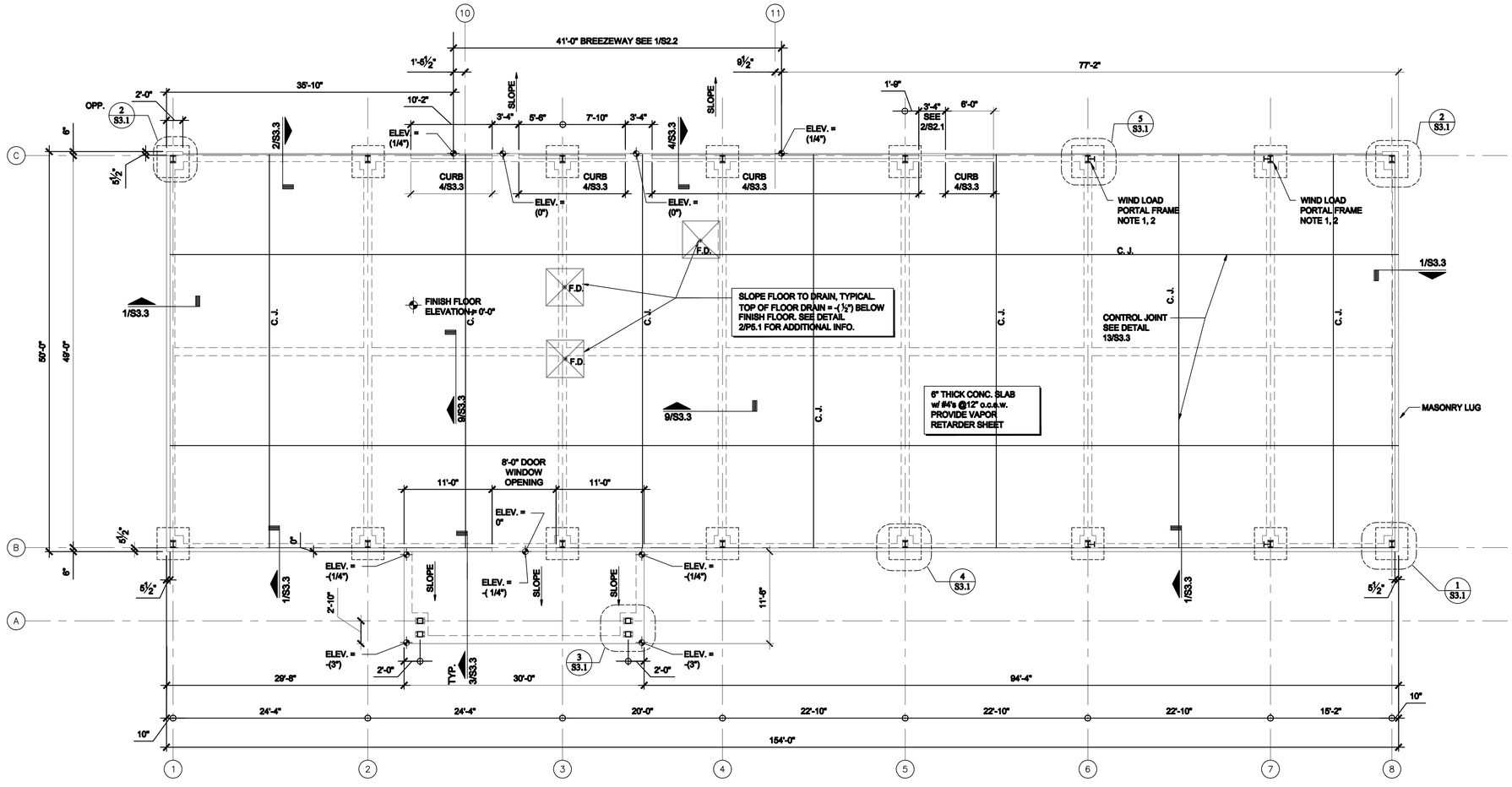

NORTH

1 FOUNDATION PLAN - OFFICE BUILDING

SCALE: 1/8" = 1' - 0"

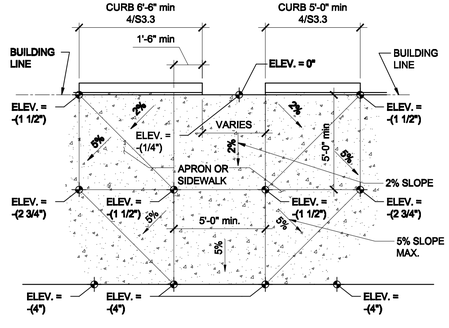

NOTES: 1. PROVIDE #5 DOWELS AT 12" O. C. AGAINST BUIDING FOUNDATION FOR SIDEWALKS LOCATED AGAINST BUILDING REF. TO ARCHITECTURAL SITE PLAN

2 PLAN DETAIL @ EXTERIOR DOOR

SCALE: 1/4" = 1' - 0"

NOTES:

1. LOCATION OF WIND PORTAL FRAME AS PER PRE-ENGINEER FABRICATOR
2. SIZE OF FOOTING SHALL BE ADJUSTED TO ACCOMMODATE WIND PORTAL FRAME
3. SLOPE CONCRETE APRON AT A RATE OF 2%
4. SLOPE CONCRETE AT ALL EXIT DOORS AT A RATE OF 2% (TYPICAL)
5. ASSUMED FINISH FLOOR ELEVATION = 0'-0" UNLESS NOTED OTHERWISE. SEE CIVIL DWGS. FOR ACTUAL ELEVATIONS.
6. TOP OF STRUCTURAL CONCRETE ELEVATION = FINISH FLOOR. UNLESS RECESSED TO RECEIVE TOPPING OR FLOORING MATERIALS.
7. REFER TO THE ARCHITECTURAL DRAWINGS FOR EXACT LOCATIONS OF FLOOR RECESSES, DROPS AND SLOPES NOT DIMENSIONED ON PLAN.
8. SEE PLUMBING DWG'S FOR FLOOR DRAINS

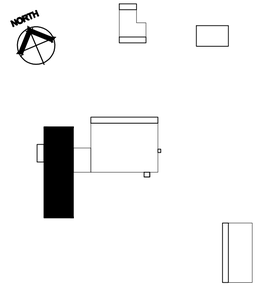

KEY PLAN

FOUNDATION PLAN - OFFICE

NOTE: THIS DRAWING WAS CREATED FOR PRODUCTION ON 22" x 34" SHEET SIZE. DO NOT SCALE PRINTS.

Texas Department of Transportation
125 E. 11th Street
Austin, Texas 78701-2483
(512) 416-2000

Copyright © 2005 Texas Department of Transportation

THIS DOCUMENT IS RELEASED FOR THE PURPOSE OF INFORMATION ONLY
NOT FOR REGULATORY APPROVAL, PERMITTING, OR CONSTRUCTION.

WACO AREA ENGINEER AND MAINTENANCE FACILITY
WACO, MCLENNAN COUNTY
WACO DISTRICT

Revisions

Drawn by: S. F.
Project No. CBC4704-00572
Date 05.21.2007
Sheet No.

S2.1
of sheets

CADFILE: T:\MAINTPA\D02FTWCBC4704-00-00572\02-77-4704D00572\Acad\proto\typical pdf\sheets\Acad\Sheets\572_S2_1.dwg Plotted: Fri, Aug. 07, 2009 @ 1:40 PM By: MBAZAN

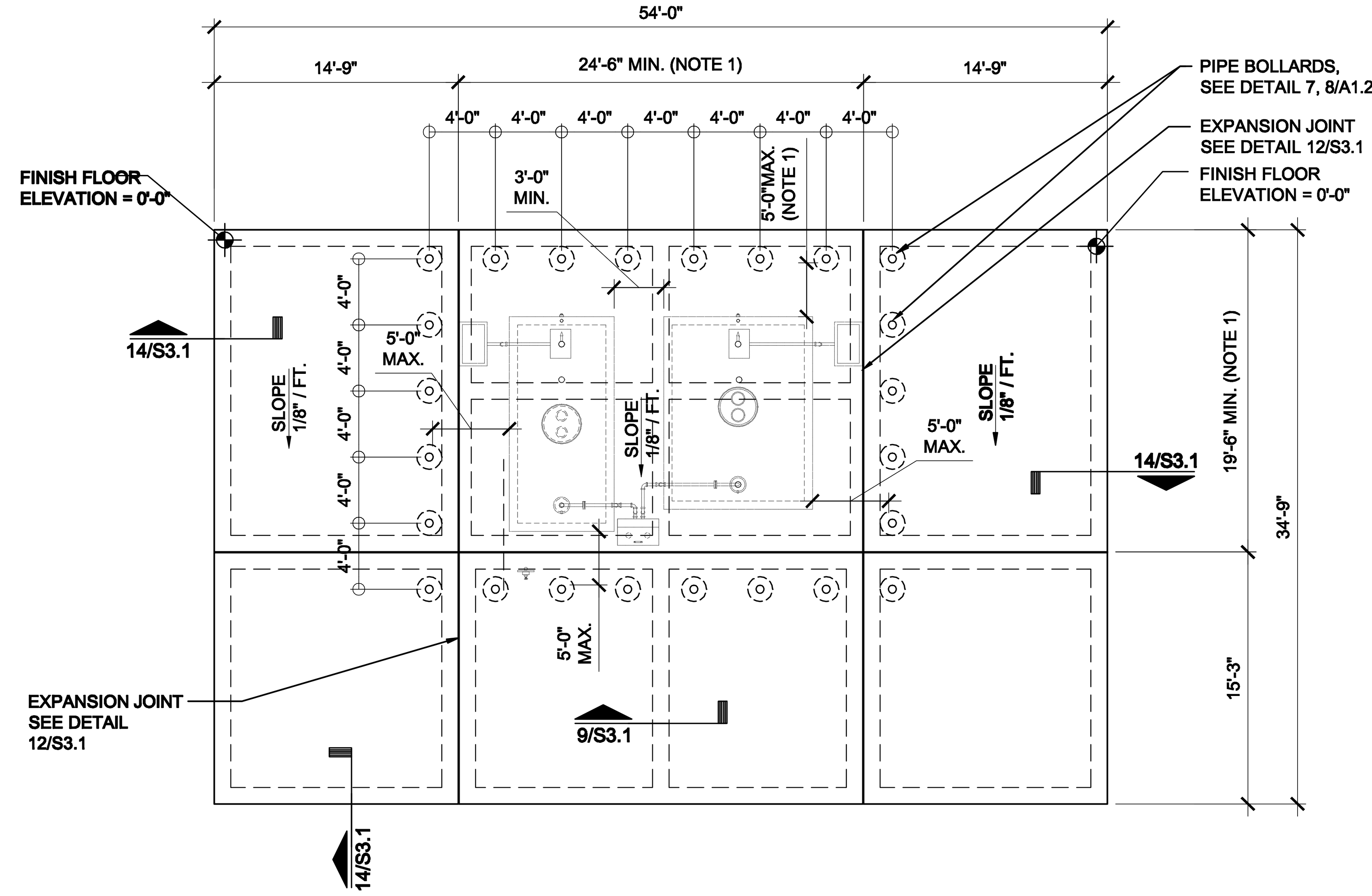

NOTES:
1. CONCRETE SLAB SIZE IS BASED BY SPECIFIED TANKS. DIMENSIONS MAY VARY PER SELECTED MANUFACTURER OF TANKS. CONTRACTOR IS RESPONSIBLE FOR MAKING ADJUSTMENTS TO CONCRETE SLAB AND MEETING THE MIN. REQUIRED CLEARANCES BETWEEN TANK TO TANK AND TANKS TO EDGE OF BOLLARDS.
2. REFER TO ARCHITECTURAL DWGS FOR LOCATION AND ORIENTATION OF FOUNDATION PAD

NORTH

2 FOUNDATION PLAN - FUEL STATION
SCALE: 1/8" = 1' - 0"

NOTES:
1. LOCATION OF WIND PORTAL FRAME AS PER PRE-ENGINEER FABRICATOR
2. SIZE OF FOOTING SHALL BE ADJUSTED TO ACCOMMODATE WIND PORTAL FRAME
3. SLOPE CONCRETE APRON AT A RATE OF 2%
4. SLOPE CONCRETE AT ALL EXIT DOORS AT A RATE OF 2% (TYPICAL)
5. ASSUMED FINISH FLOOR ELEVATION = 0'-0" UNLESS NOTED OTHERWISE. SEE CIVIL DWGS. FOR ACTUAL ELEVATIONS.
6. TOP OF STRUCTURAL CONCRETE ELEVATION = FINISH FLOOR. UNLESS RECESSED TO RECEIVE TOPPING OR FLOORING MATERIALS.
7. REFER TO THE ARCHITECTURAL DRAWINGS FOR EXACT LOCATIONS OF FLOOR RECESSES, DROPS AND SLOPES NOT DIMENSIONED ON PLAN.
8. SEE PLUMBING DWG'S FOR FLOOR DRAINS
9. PROVIDE A 3'-0" X 3'0" X 18" FOOTING AT EACH LEG OF VEHICLE LIFT. COORDINATE WITH MANUFACTURER FOR EXACT LOCATION OF LEGS.

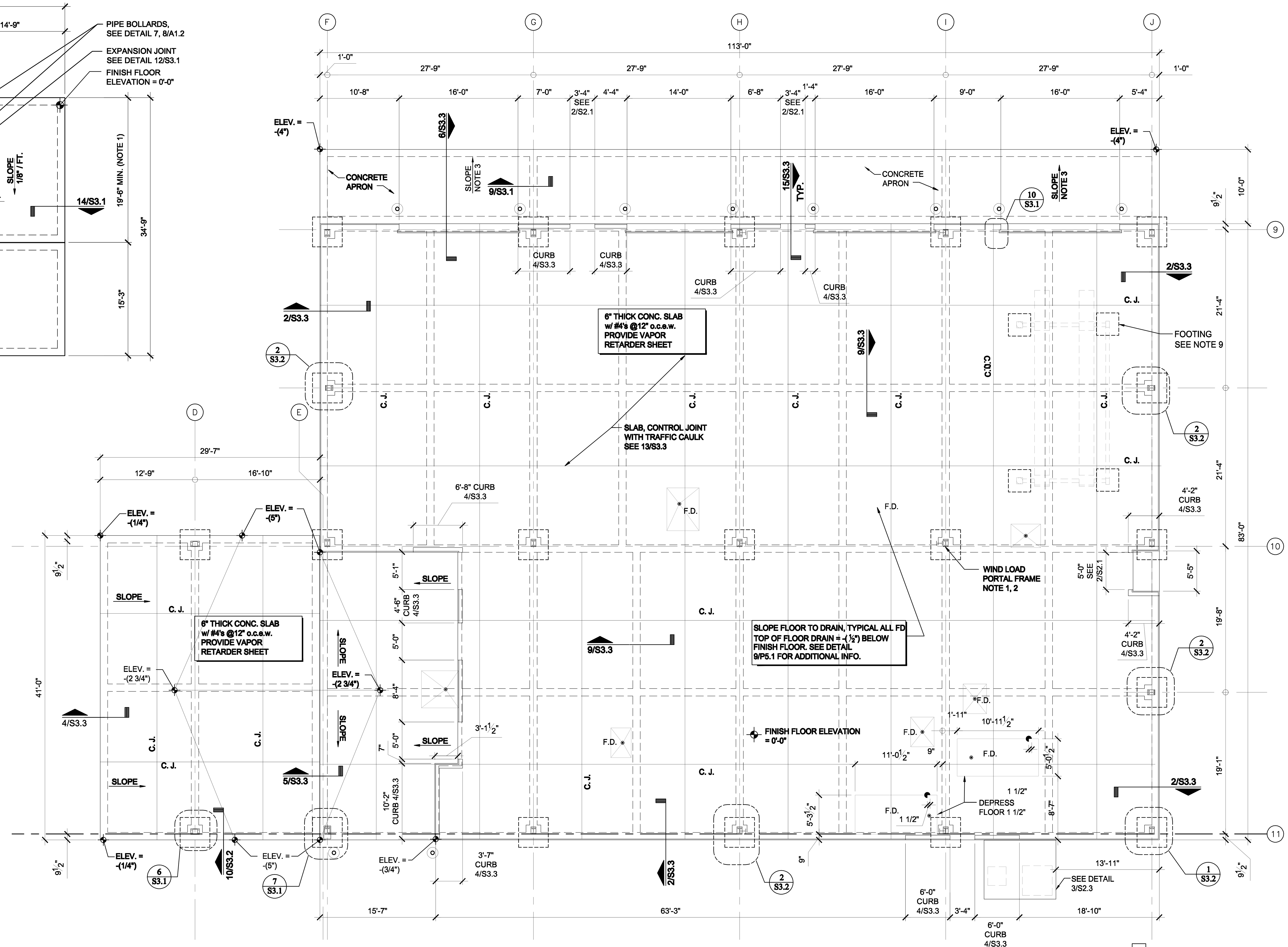

NORTH

1 FOUNDATION PLAN - LAB / SHOP BUILDING
SCALE: 1/8" = 1' - 0"

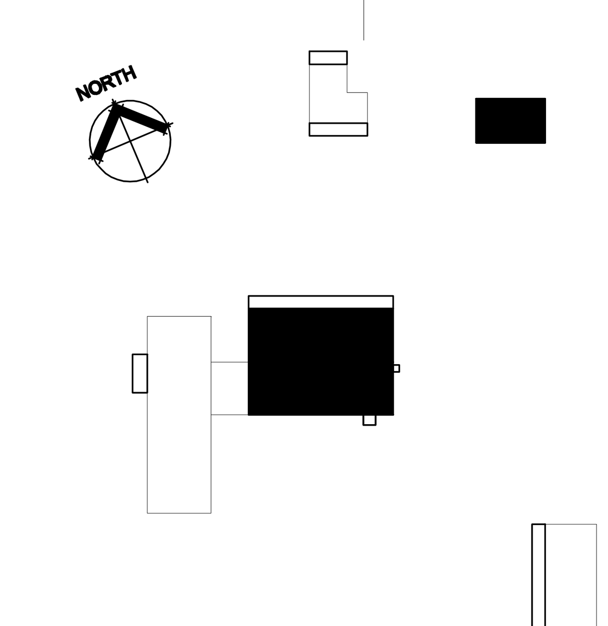

KEY PLAN

CADFILE: T:\MNTFM\D02FTW\CBC4704-00-00672\7-47040067\Acad\prototypical pdf\waco\Acad\Struct\672_S2_2.dwg Plotted: Fri, Aug. 07, 2009 @ 1:47 PM By: MBAZAN

Texas Department of Transportation
125 E. 11th Street
Austin, Texas 78701-2483
(512) 416-2000
Copyright © 2005 Texas Department of Transportation

THIS DOCUMENT IS RELEASED FOR THE PURPOSE OF INFORMATION ONLY
NOT FOR REGULATORY APPROVAL, PERMITTING, OR CONSTRUCTION.

WACO AREA ENGINEER AND MAINTENANCE FACILITY
WACO, MCLENNAN COUNTY
WACO DISTRICT

Revisions

Drawn by: S. F.
Project No. CBC4704-00672
Date 05.21.2007
Sheet No. S2.2
of sheets

FOUNDATION PLAN - LAB / SHOP

NOTE: THIS DRAWING WAS CREATED FOR PRODUCTION ON 22" x 34" SHEET SIZE. DO NOT SCALE PRINTS.

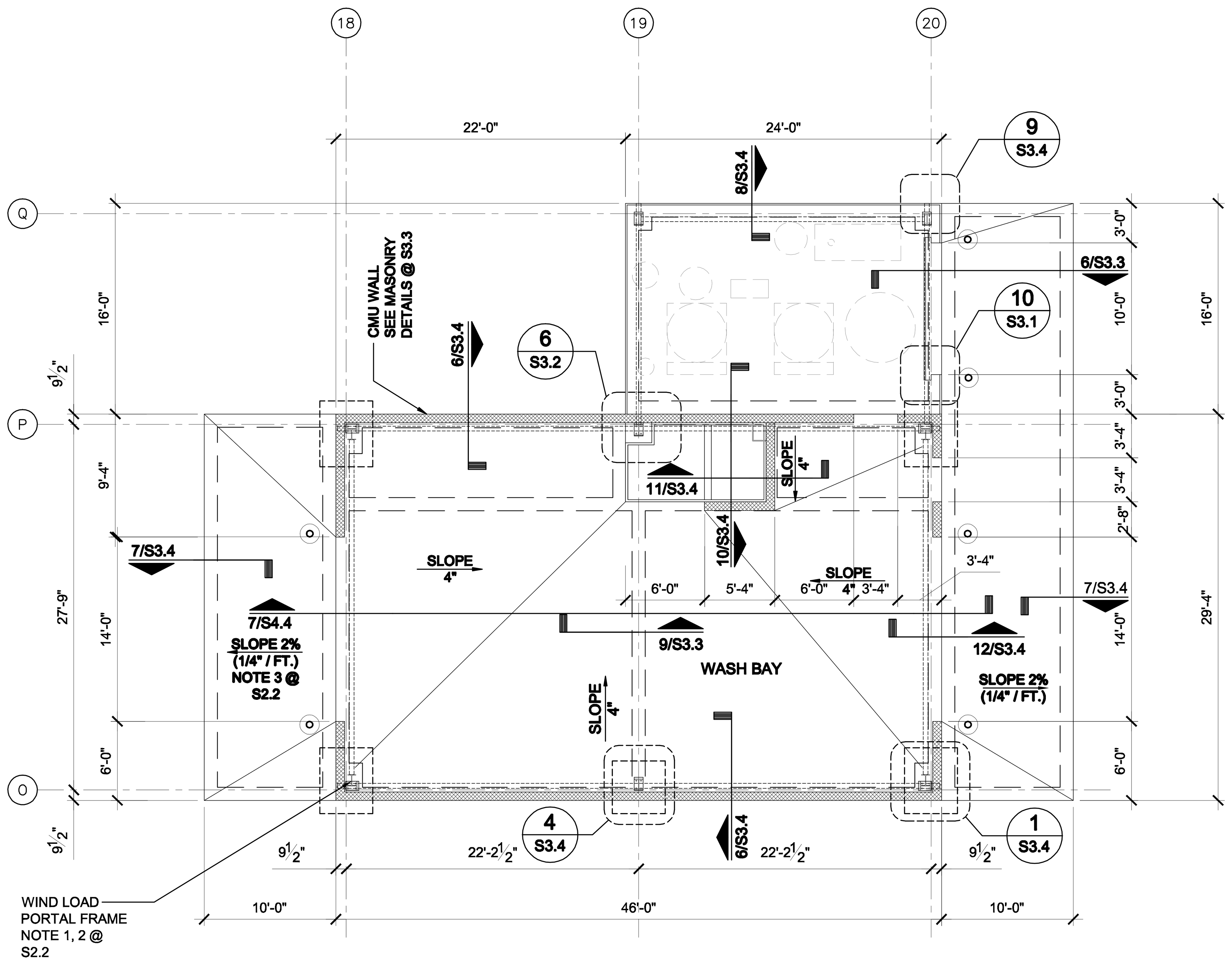

2 FOUNDATION PLAN - WASH BAY
SCALE: 1/8" = 1' - 0"

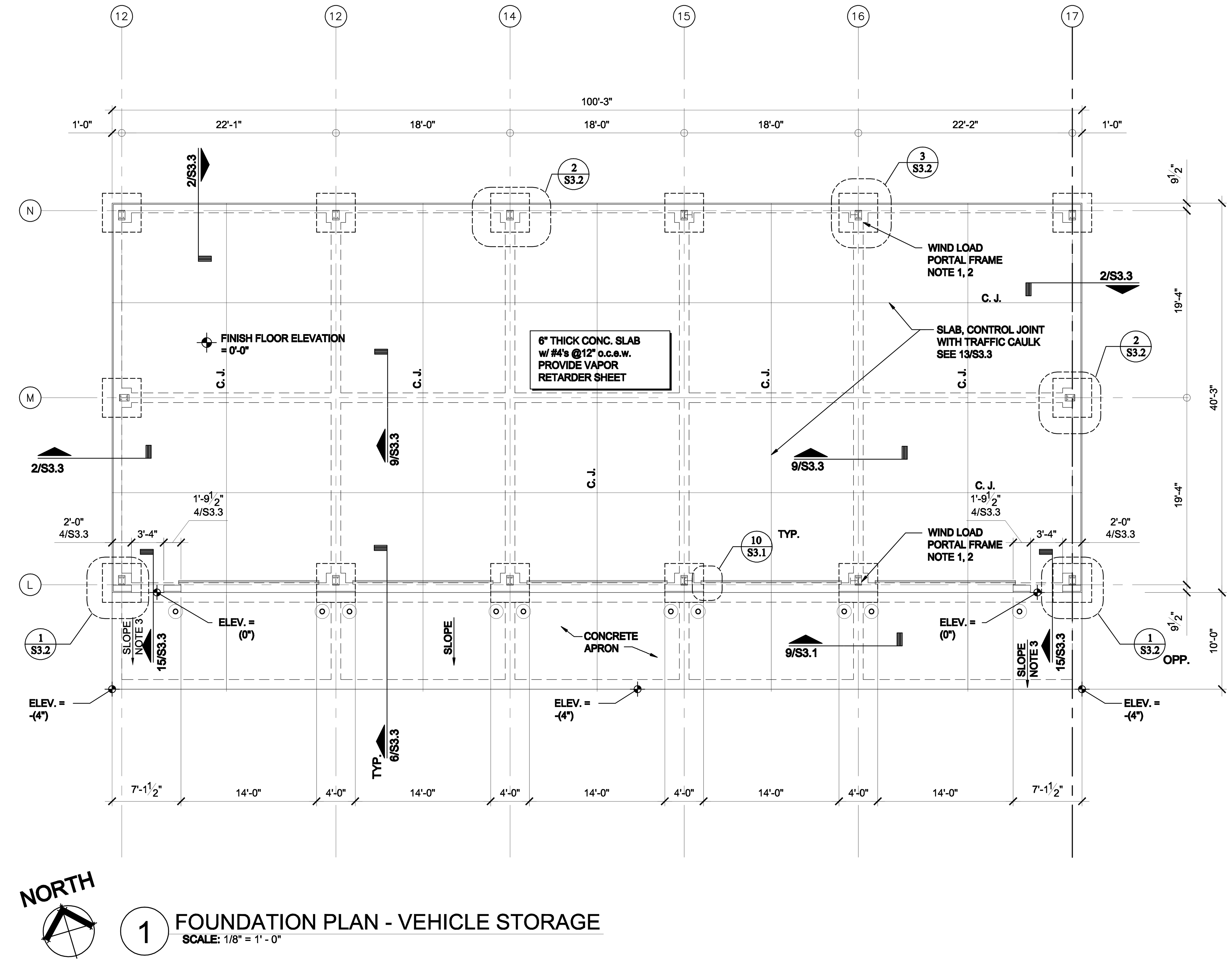

1 FOUNDATION PLAN - VEHICLE STORAGE
SCALE: 1/8" = 1' - 0"

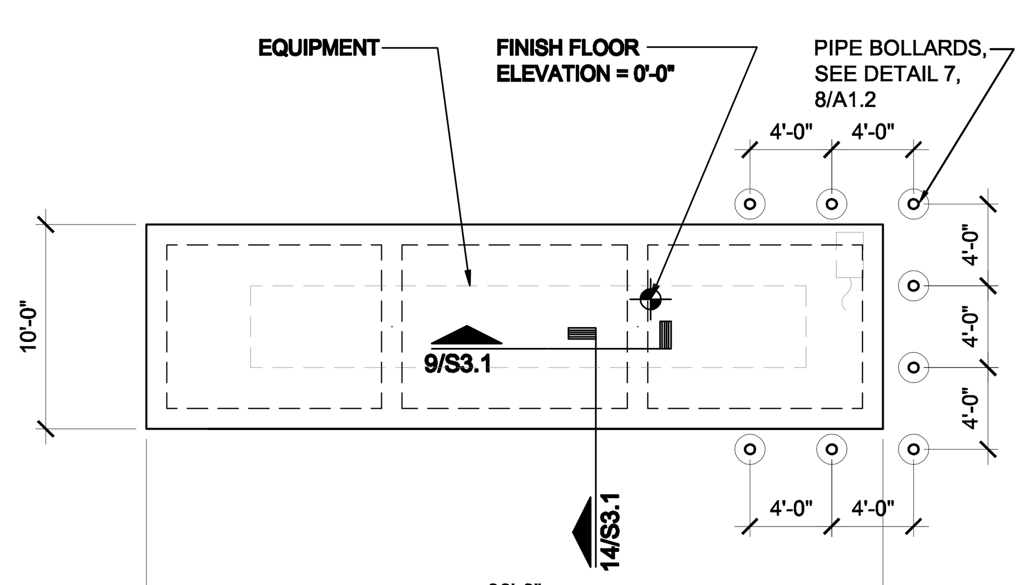

NOTE. REFER TO ARCHITECTURAL SITE PLAN FOR LOCATION

4 FOUNDATION PLAN - LPG TANK
SCALE: 1/8" = 1' - 0"

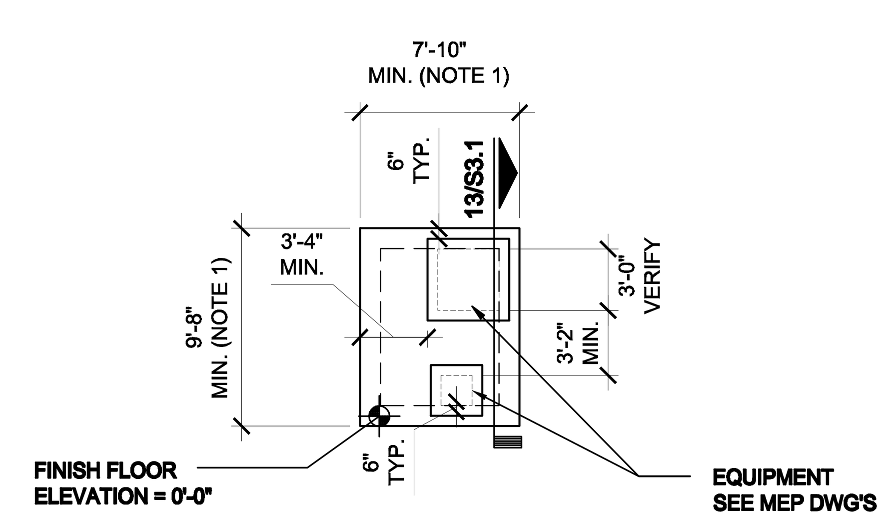

NOTES:
1. CONCRETE SLAB SIZE IS BASED BY SPECIFIED MECHANICAL EQUIPMENT. DIMENSIONS MAY VARY PER SELECTED MANUFACTURER OF EQUIPMENT. CONTRACTOR IS RESPONSIBLE FOR MAKING ADJUSTMENTS TO CONCRETE SLAB AND MEETING THE MIN. REQUIRED CLEARANCES BETWEEN TANK TO TANK AND TANKS TO EDGE OF BOLLARDS.
2. REFER TO ARCHITECTURAL DWGS FOR LOCATION AND ORIENTATION OF FOUNDATION PAD
3. PROVIDE DOWELS BETWEEN PAD AND BUILDING FOUNDATION.

3 FOUNDATION PLAN - TRANSFORMER
SCALE: 1/8" = 1' - 0"

NOTES:
1. LOCATION OF WIND PORTAL FRAME AS PER PRE-ENGINEER FABRICATOR
2. SIZE OF FOOTING SHALL BE ADJUSTED TO ACCOMMODATE WIND PORTAL FRAME
3. SLOPE CONCRETE APRON AT A RATE OF 2%
4. SLOPE CONCRETE AT ALL EXIT DOORS AT A RATE OF 2% (TYPICAL)
5. ASSUMED FINISH FLOOR ELEVATION = 0'-0" UNLESS NOTED OTHERWISE. SEE CIVIL DWGS. FOR ACTUAL ELEVATIONS.
6. TOP OF STRUCTURAL CONCRETE ELEVATION = FINISH FLOOR. UNLESS RECESSED TO RECEIVE TOPPING OR FLOORING MATERIALS.
7. REFER TO THE ARCHITECTURAL DRAWINGS FOR EXACT LOCATIONS OF FLOOR RECESSES, DROPS AND SLOPES NOT DIMENSIONED ON PLAN.

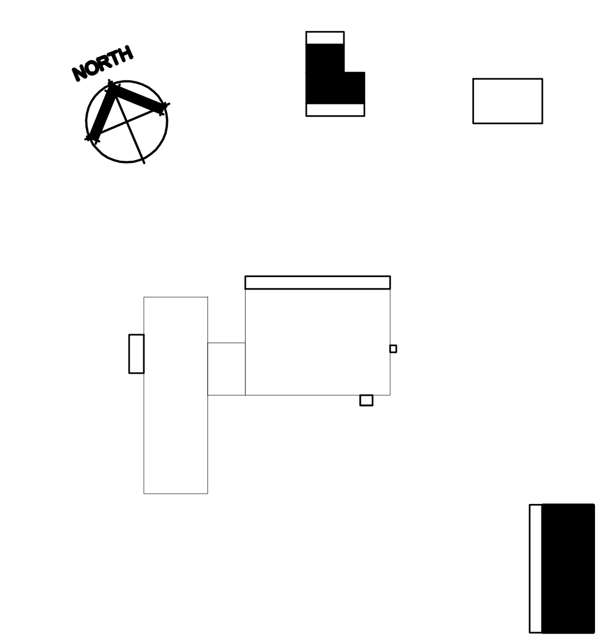

KEY PLAN

FOUNDATION PLAN - VEHICLE STORAGE

Texas Department of Transportation
125 E. 11th Street
Austin, Texas 78701-2483
(512) 416-2040

Copyright © 2005 Texas Department of Transportation

THIS DOCUMENT IS RELEASED FOR THE PURPOSE OF INFORMATION ONLY
NOT FOR REGULATORY APPROVAL, PERMITTING, OR CONSTRUCTION.

WACO AREA ENGINEER AND MAINTENANCE FACILITY
WACO, MCLENNAN COUNTY
WACO DISTRICT

Revisions

Drawn by: S. F.
Project No. CBC4704-00672
Date 05.21.2007
Sheet No. S2.3 of sheets

NOTE: THIS DRAWING WAS CREATED FOR PRODUCTION ON 22" x 34" SHEET SIZE. DO NOT SCALE PRINTS.

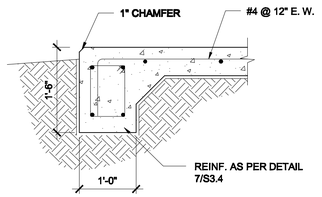

14 SECTION DETAIL
SCALE: 3/4" = 1' - 0"

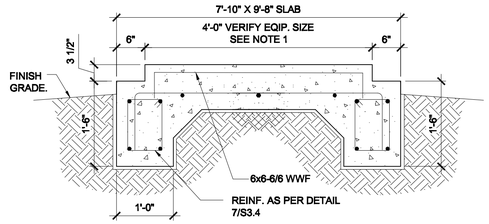

NOTE 1. REFER TO ARCHITECTURAL DWGS FOR LOCATION OF ELECTRIC GENERATOR PAD

13 SECTION DETAIL
SCALE: 3/4" = 1' - 0"

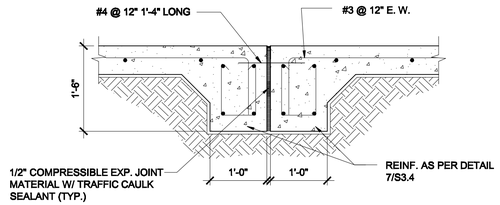

12 SECTION DETAIL
SCALE: 3/4" = 1' - 0"

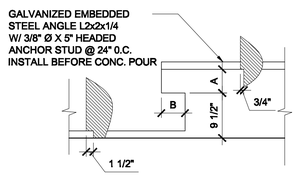

NOTE: DIMS. A & B AS PER DOOR MANUFACTURER'S REQUIREMENTS

10 PLAN DETAIL
SCALE: 3/4" = 1' - 0" TYPICAL

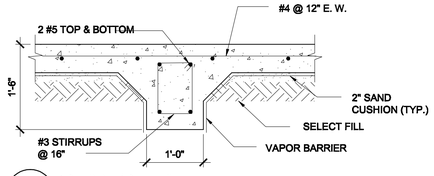

9 PLAN DETAIL
SCALE: 3/4" = 1' - 0"

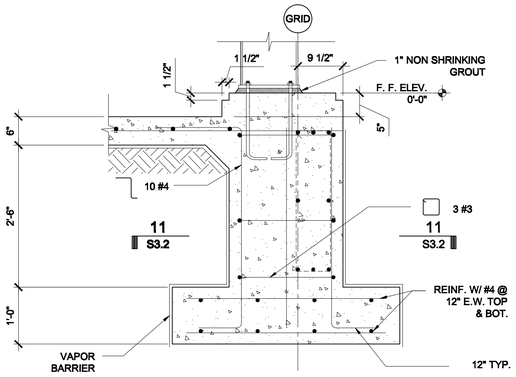

8 PLAN DETAIL
SCALE: 3/4" = 1' - 0"

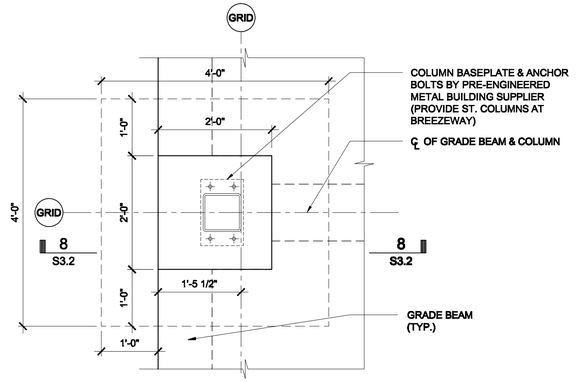

6 PLAN DETAIL
SCALE: 3/4" = 1' - 0" TYPICAL AT BREEZWAY

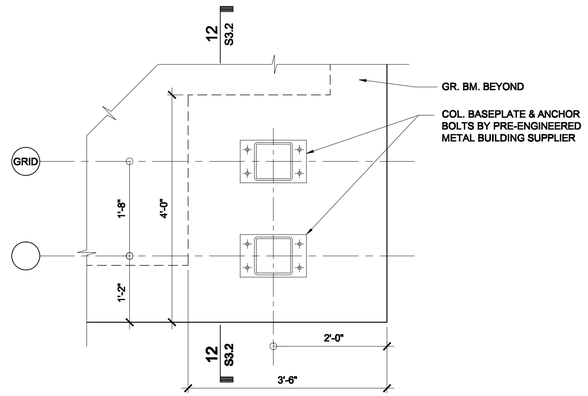

3 PLAN DETAIL
SCALE: 3/4" = 1' - 0"

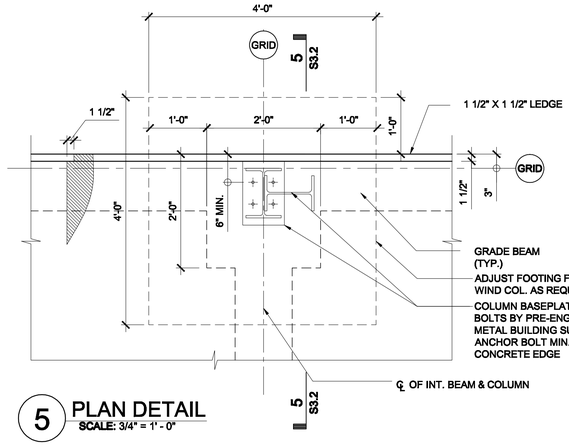

5 PLAN DETAIL
SCALE: 3/4" = 1' - 0"

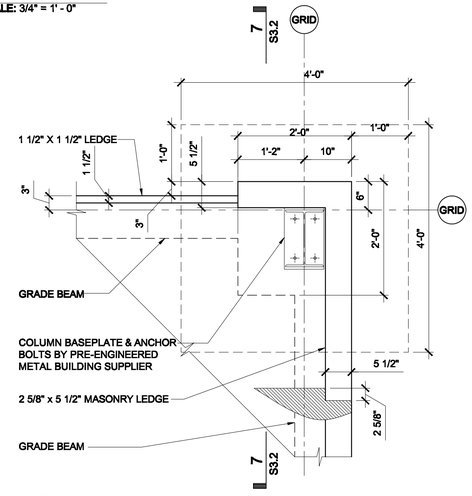

2 PLAN DETAIL
SCALE: 3/4" = 1' - 0"

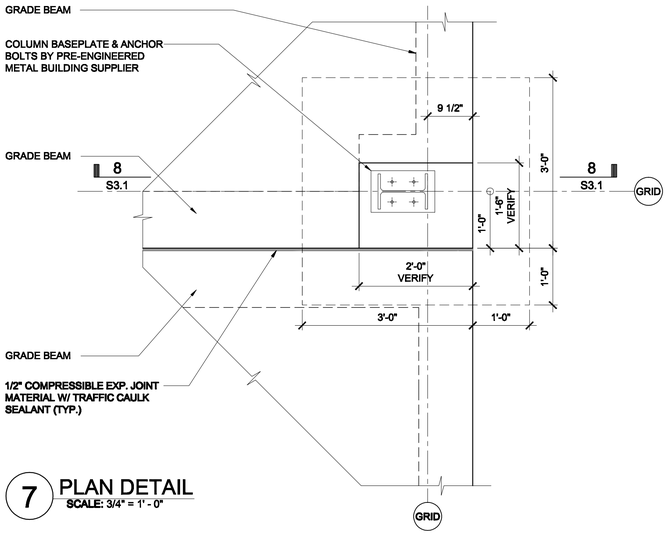

7 PLAN DETAIL
SCALE: 3/4" = 1' - 0"

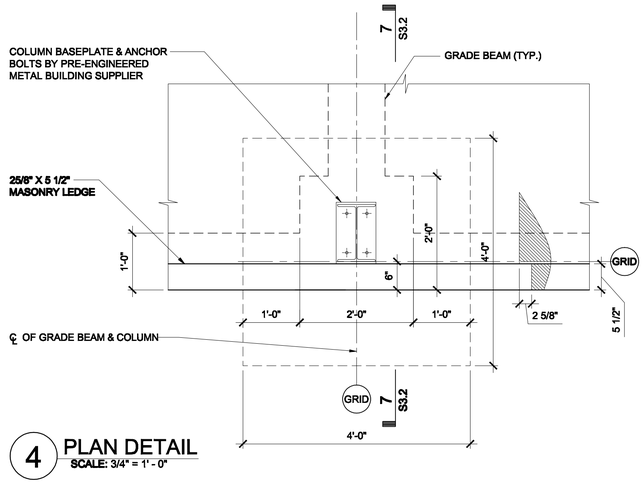

4 PLAN DETAIL
SCALE: 3/4" = 1' - 0"

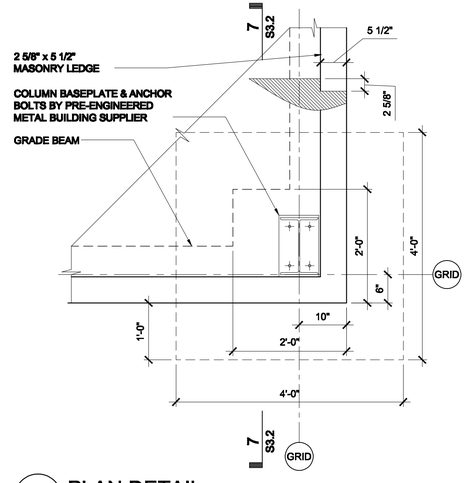

1 PLAN DETAIL
SCALE: 3/4" = 1' - 0"

FOUNDATION DETAILS

NOTE: THIS DRAWING WAS CREATED FOR PRODUCTION ON 22" x 34" SHEET SIZE. DO NOT SCALE PRINTS.

Texas Department of Transportation
125 E. 11th Street
Austin, Texas 78701-2483
(512) 416-2000

Copyright © 2005 Texas Department of Transportation

THIS DOCUMENT IS RELEASED FOR THE PURPOSE OF INFORMATION ONLY NOT FOR REGULATORY APPROVAL, PERMITTING, OR CONSTRUCTION.

WACO AREA ENGINEER AND MAINTANENCE FACILITY
WACO, MCLENNAN COUNTY
WACO DISTRICT

Revisions

Drawn by: S. F.
Project No. CBC4704-00572
Date 05.21.2007
Sheet No.

S3.1
of sheets

CADFILE: T:\MAINTFAM\D02FTWCBC\4704-00-00572\02-77-4704D00572\Acad\prototypical pdfs\waco\Acad\Structural\waco572_S3_1.dwg Plotted: Fri, Aug. 07, 2009 @ 1:01 PM By: MBAZAN

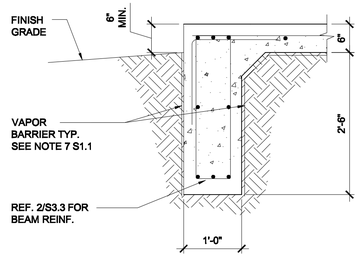

10 SECTION DETAIL
SCALE: 3/4" = 1' - 0"

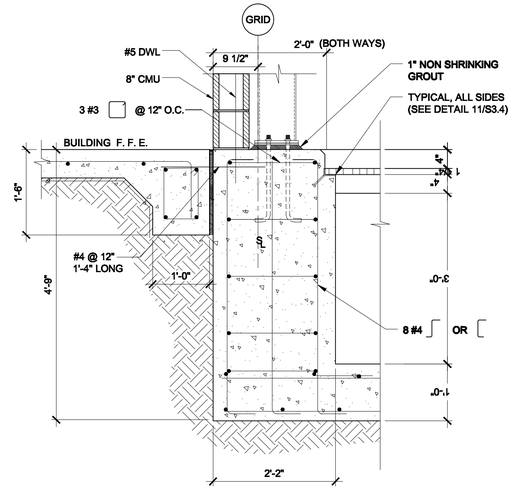

9 SECTION DETAIL
SCALE: 3/4" = 1' - 0"

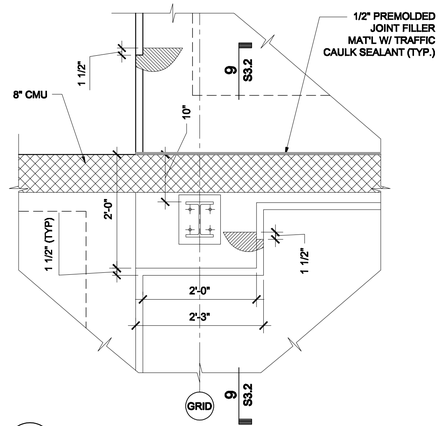

6 PLAN DETAIL
SCALE: 3/4" = 1' - 0"

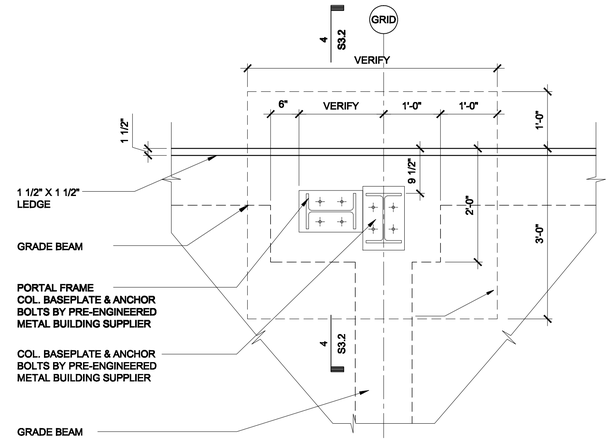

3 PLAN DETAIL
SCALE: 3/4" = 1' - 0"

11 SECTION DETAIL
SCALE: 3/4" = 1' - 0"

8 SECTION DETAIL
SCALE: 3/4" = 1' - 0"

5 SECTION DETAIL
SCALE: 3/4" = 1' - 0"

2 PLAN DETAIL
SCALE: 3/4" = 1' - 0"

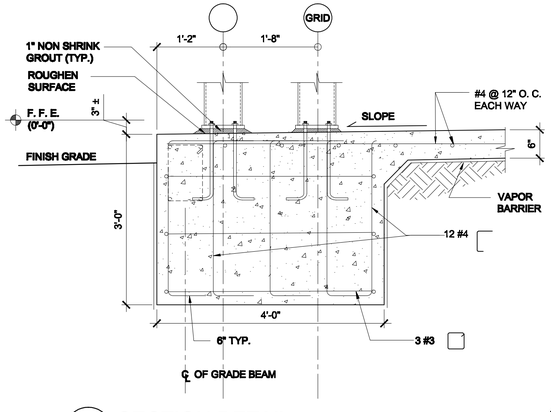

12 SECTION DETAIL
SCALE: 3/4" = 1' - 0"

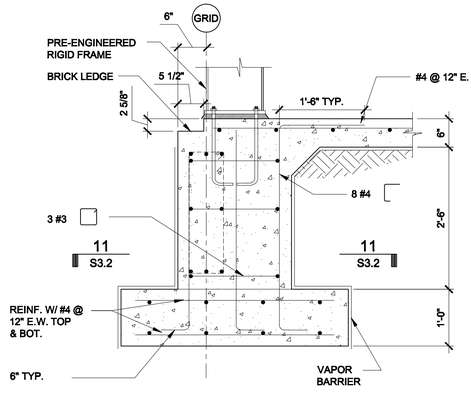

7 SECTION DETAIL
SCALE: 3/4" = 1' - 0"

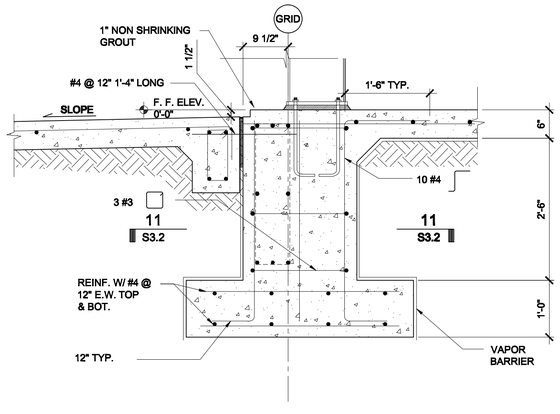

4 SECTION DETAIL
SCALE: 3/4" = 1' - 0"

1 PLAN DETAIL
SCALE: 3/4" = 1' - 0" TYPICAL AT CORNER

FOUNDATION DETAILS

NOTE: THIS DRAWING WAS CREATED FOR PRODUCTION ON 22" x 34" SHEET SIZE. DO NOT SCALE PRINTS.

Texas Department of Transportation
125 E. 11th Street
Austin, Texas 78701-2483
(512) 416-3000

Copyright © 2005 Texas Department of Transportation

THIS DOCUMENT IS RELEASED FOR THE PURPOSE OF
INFORMATION ONLY
NOT FOR REGULATORY
APPROVAL, PERMITTING,
OR CONSTRUCTION.

WACO AREA ENGINEER
AND MAINTENANCE FACILITY
WACO, MCLENNAN COUNTY
WACO DISTRICT

Revisions

Drawn by:
S. F.
Project No.
CBC4704-00672
Date
05.21.2007
Sheet No.

S3.2
of sheets

CADFILE: T:\MNTFA\D02\FTW\CBC4704-00-637\02-77-4704006371\Used\prototype\Used pdf\Waco\Used\Struct\672_S3_1.dwg Plotted: Fri, Aug. 07, 2009 @ 1:50 PM By: MBAZAN

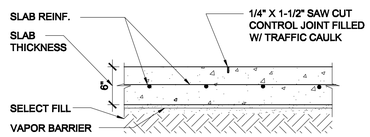

13 SECTION @ CONTROL JOINT
SCALE: 1" = 1' - 0"

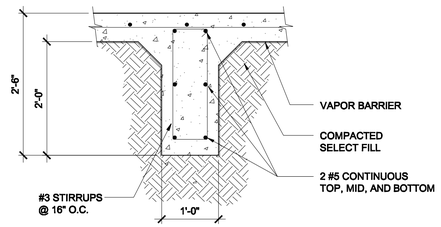

9 SECTION @ GRADE BEAM
SCALE: 1" = 1' - 0"

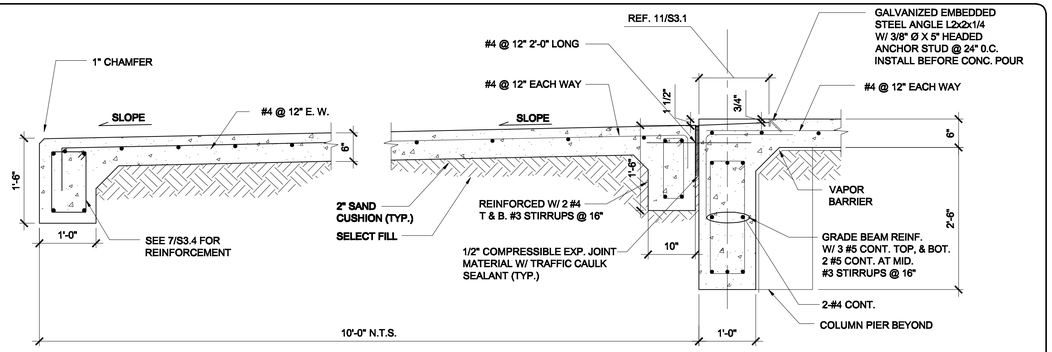

6 SECTION @ CONCRETE APRON
SCALE: 3/4" = 1' - 0"

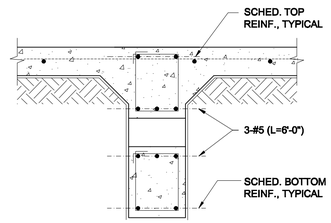

12 SECTION @ GRADE BEAM
SCALE: 3/4" = 1' - 0"

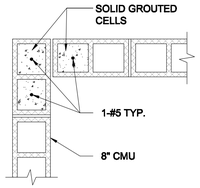

8 TYP. DETAIL @ WALL CORNER
SCALE: 3/4" = 1' - 0"

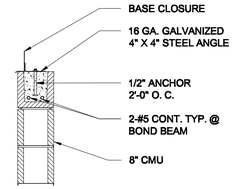

13 TYP. DETAIL @ TOP OF WALL
SCALE: 3/4" = 1' - 0"

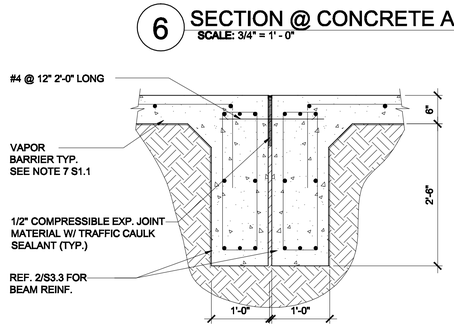

5 SECTION @ GRADE BEAM
SCALE: 3/4" = 1' - 0"

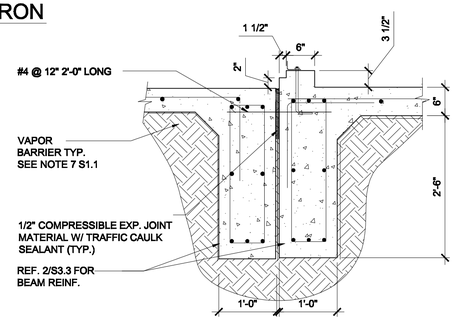

4 SECTION @ GRADE BEAM
SCALE: 3/4" = 1' - 0"

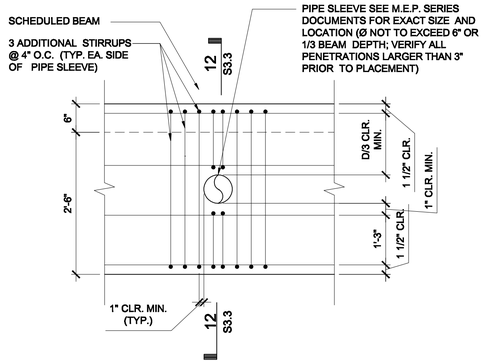

11 SECTION @ GRADE BEAM
SCALE: 3/4" = 1' - 0"

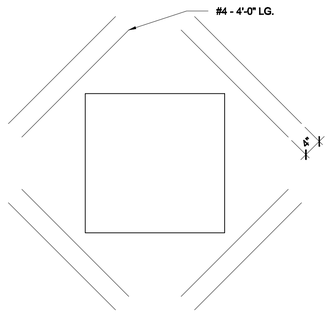

7 BONDBEAM CORNER DETAIL
SCALE: 3/4" = 1' - 0"

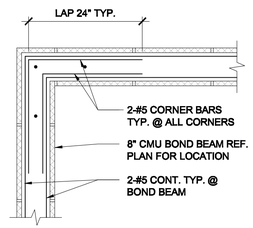

14 CORNER BARS AT ALL
SCALE: 3/4" = 1' - 0" REENTRANT CORNERS

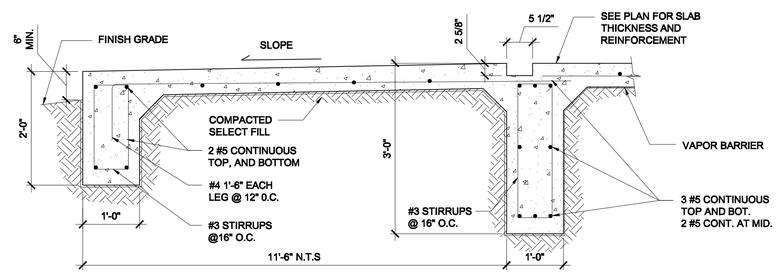

3 SECTION @ GRADE BEAM & PORCH
SCALE: 3/4" = 1' - 0"

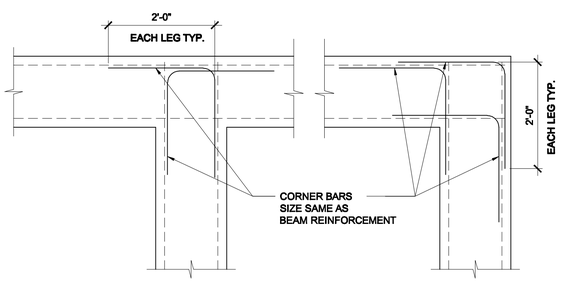

CORNER AND INTERSECTION REINFORCING APPLIES TO TOP AND BOTTOM AND INTERMEDIATE BARS

10 SECTION @ GRADE BEAM
SCALE: 3/4" = 1' - 0"

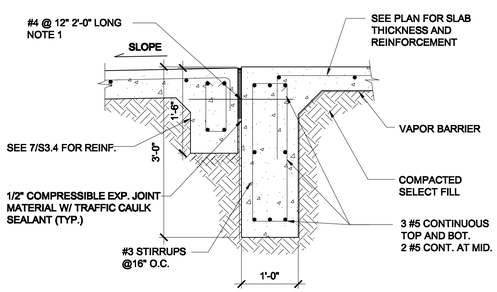

NOTES: 1. PROVIDE #5 DOWELS AT 12" O. C. AGAINST BUIDING FOUNDATION FOR SIDEWALKS LOCATED AGAINST BUILDING

15 SECTION @ GRADE BEAM
SCALE: 3/4" = 1' - 0" TYPICAL @ DOOR

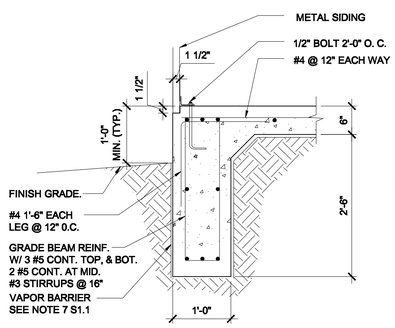

2 SECTION @ GRADE BEAM
SCALE: 3/4" = 1' - 0"

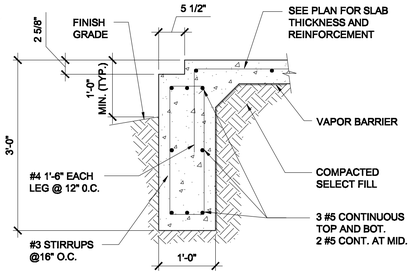

1 SECTION @ GRADE BEAM
SCALE: 3/4" = 1' - 0"

FOUNDATION DETAILS

NOTE: THIS DRAWING WAS CREATED FOR PRODUCTION ON 22" x 34" SHEET SIZE. DO NOT SCALE PRINTS.

Texas Department of Transportation
125 E. 11th Street
Austin, Texas 78701-2483
(512) 416-3000

Copyright © 2005 Texas Department of Transportation

THIS DOCUMENT IS RELEASED FOR THE PURPOSE OF
INFORMATION ONLY
NOT FOR REGULATORY
APPROVAL, PERMITTING,
OR CONSTRUCTION.

WACO AREA ENGINEER AND MAINTENANCE FACILITY
WACO, MCLENNAN COUNTY
WACO DISTRICT

Revisions

Drawn by: S. F.
Project No. CBC4704-00672
Date 05.21.2007
Sheet No.

S3.3
of sheets

CADFILE: T:\ANTRA\DGN\CBC4704-00-S3\02-77-4704S3S1.dgn

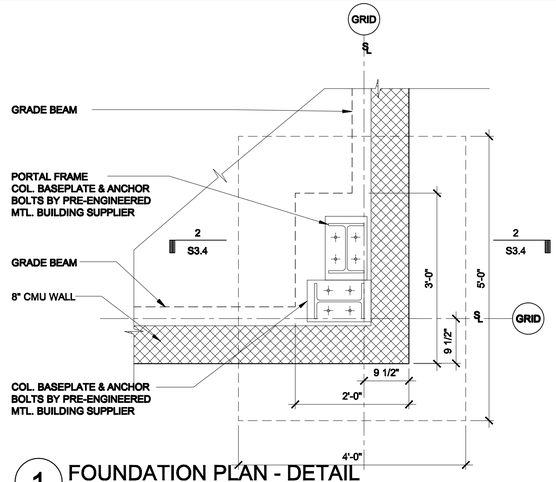

1 FOUNDATION PLAN - DETAIL
SCALE: 3/4" = 1' - 0"

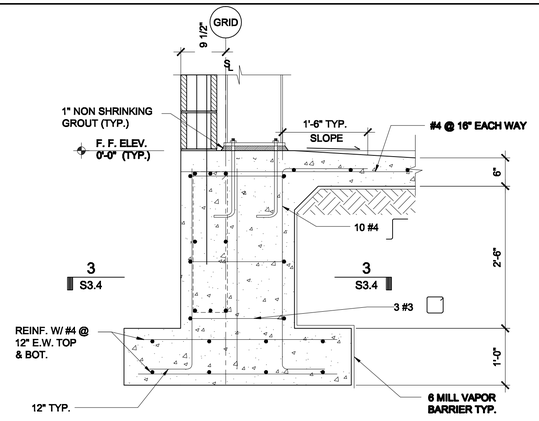

2 SECTION DETAIL
SCALE: 3/4" = 1' - 0"

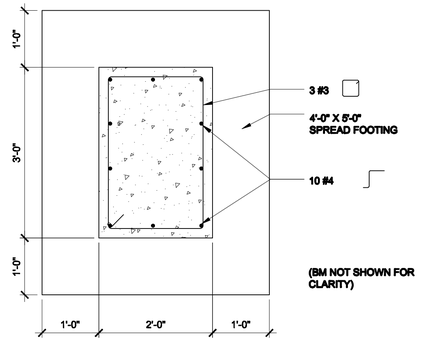

3 SECTION DETAIL
SCALE: 3/4" = 1' - 0"

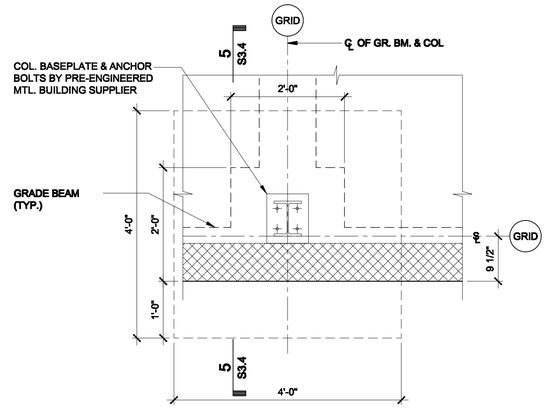

4 FOUNDATION PLAN - DETAIL
SCALE: 3/4" = 1' - 0"

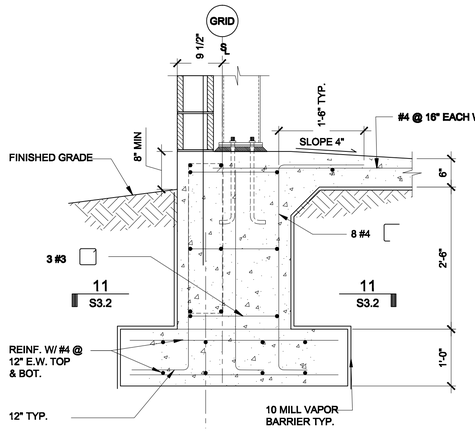

5 SECTION DETAIL
SCALE: 3/4" = 1' - 0"

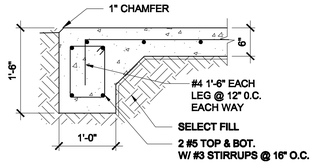

7 SECTION DETAIL
SCALE: 3/4" = 1' - 0"

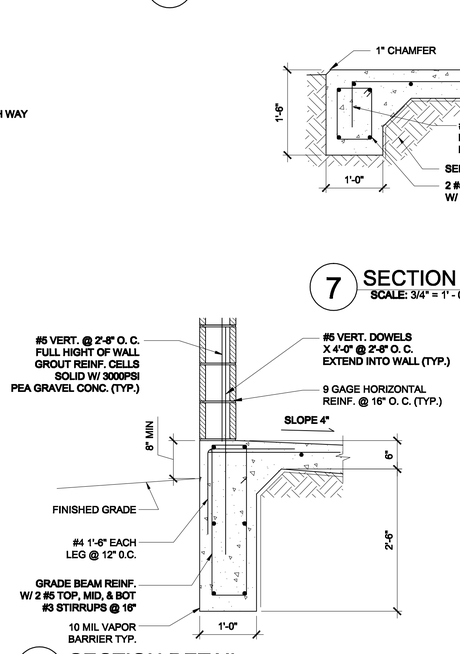

6 SECTION DETAIL
SCALE: 3/4" = 1' - 0"

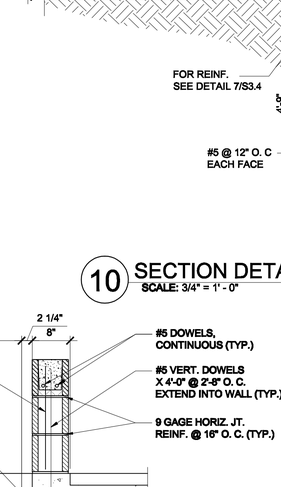

10 SECTION DETAIL
SCALE: 3/4" = 1' - 0"

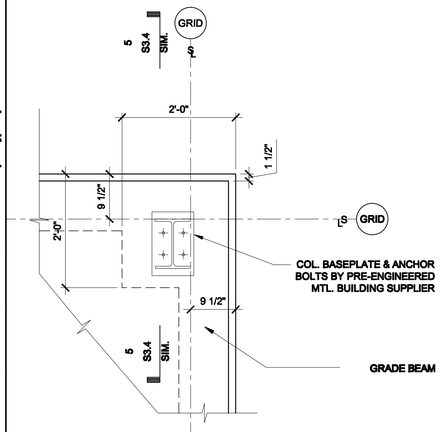

9 PLAN DETAIL
SCALE: 3/4" = 1' - 0"

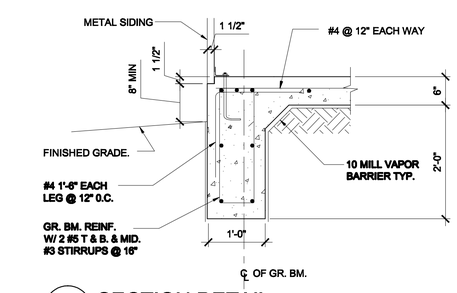

8 SECTION DETAIL
SCALE: 3/4" = 1' - 0"

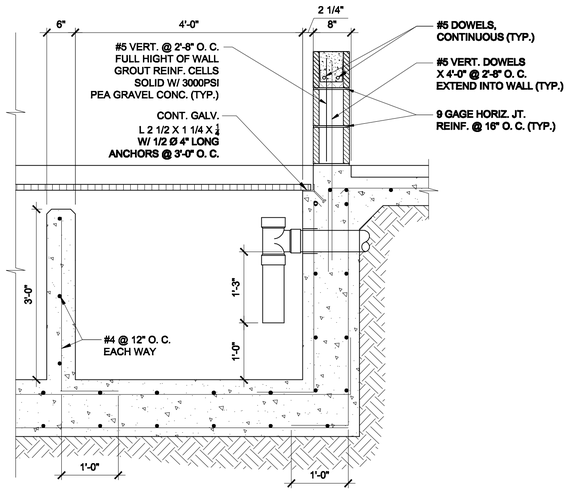

11 SECTION DETAIL
SCALE: 3/4" = 1' - 0"

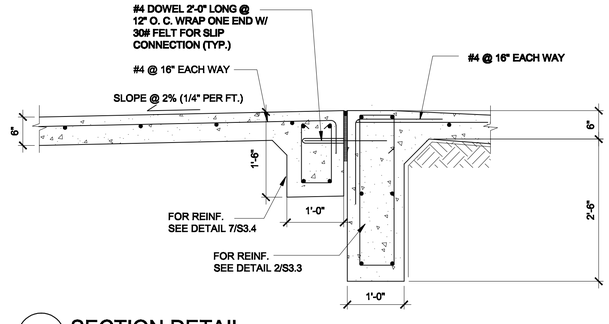

12 SECTION DETAIL
SCALE: 3/4" = 1' - 0"

FOUNDATION DETAILS

NOTE: THIS DRAWING WAS CREATED FOR PRODUCTION ON 22" x 34" SHEET SIZE. DO NOT SCALE PRINTS.

CADFILE: T:\NHTF\WDOF\WCBC4704-00-857\02-77-4704008377\acad\pvrotx\pytical pdf\sheets\Acad\Structs\872_S3_1.dwg Plotted: Fri, Aug. 07, 2009 @ 1:49 PM By: MBAZAN

Texas Department of Transportation
125 E. 11th Street
Austin, Texas 78701-2483
(512) 416-2000
Copyright © 2005 Texas Department of Transportation

THIS DOCUMENT IS RELEASED FOR THE PURPOSE OF
INFORMATION ONLY
NOT FOR REGULATORY
APPROVAL, PERMITTING,
OR CONSTRUCTION.

WACO AREA ENGINEER
AND MAINTENANCE FACILITY
WACO, MCLENNAN COUNTY
WACO DISTRICT

Revisions

Drawn by:
S. F.
Project No.
CBC4704-00672
Date
05.21.2007
Sheet No.

S3.4
of sheets

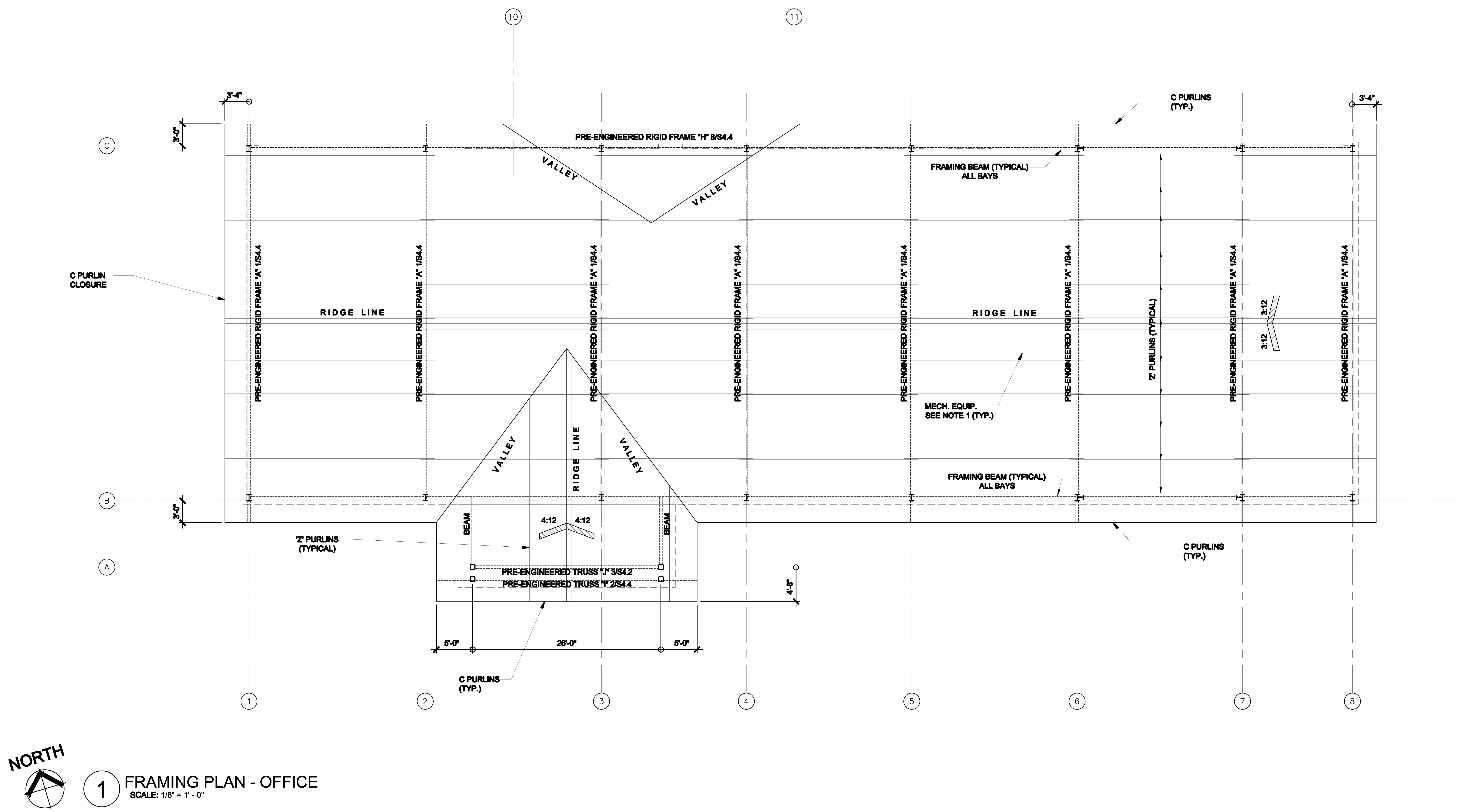

1 FRAMING PLAN - OFFICE
SCALE: 1/8" = 1' - 0"

NOTE 1. WEIGHT OF MAJOR EQUIPMENT SHALL BE CONSIDERED IN THE DESIGN OF PURLINS. REFER AND COORDINATE WITH MECHANICAL DRAWINGS FOR LOCATION AND ACTUAL WEIGHT OF EQUIPMENT. MAX. DEFLECTION AT EQUIPMENT ≤ 3/16"

Texas Department of Transportation
125 E. 11th Street
Austin, Texas 78701-2483
(512) 416-3048

Copyright © 2005 Texas Department of Transportation

THIS DOCUMENT IS RELEASED FOR THE PURPOSE OF INFORMATION ONLY
NOT FOR REGULATORY APPROVAL, PERMITTING, OR CONSTRUCTION.

WACO AREA ENGINEER AND MAINTENANCE FACILITY
WACO, MCLENNAN COUNTY
WACO DISTRICT

Revisions

Drawn by: S. F.
Project No. CBC4704-00672
Date 05.21.2007
Sheet No.

S4.1
of sheets

FRAMING PLAN - OFFICE

NOTE: THIS DRAWING WAS CREATED FOR PRODUCTION ON 22" x 34" SHEET SIZE. DO NOT SCALE PRINTS.

NOTES:
1. PROVIDE FRAME WITH REQUIRED CONNECTIONS FOR FUTURE ADDITION.
2. COLUMN BETWEEN GRID LINE 9,10 AND 11 SHALL NOT BE PART OF RIGID FRAME.

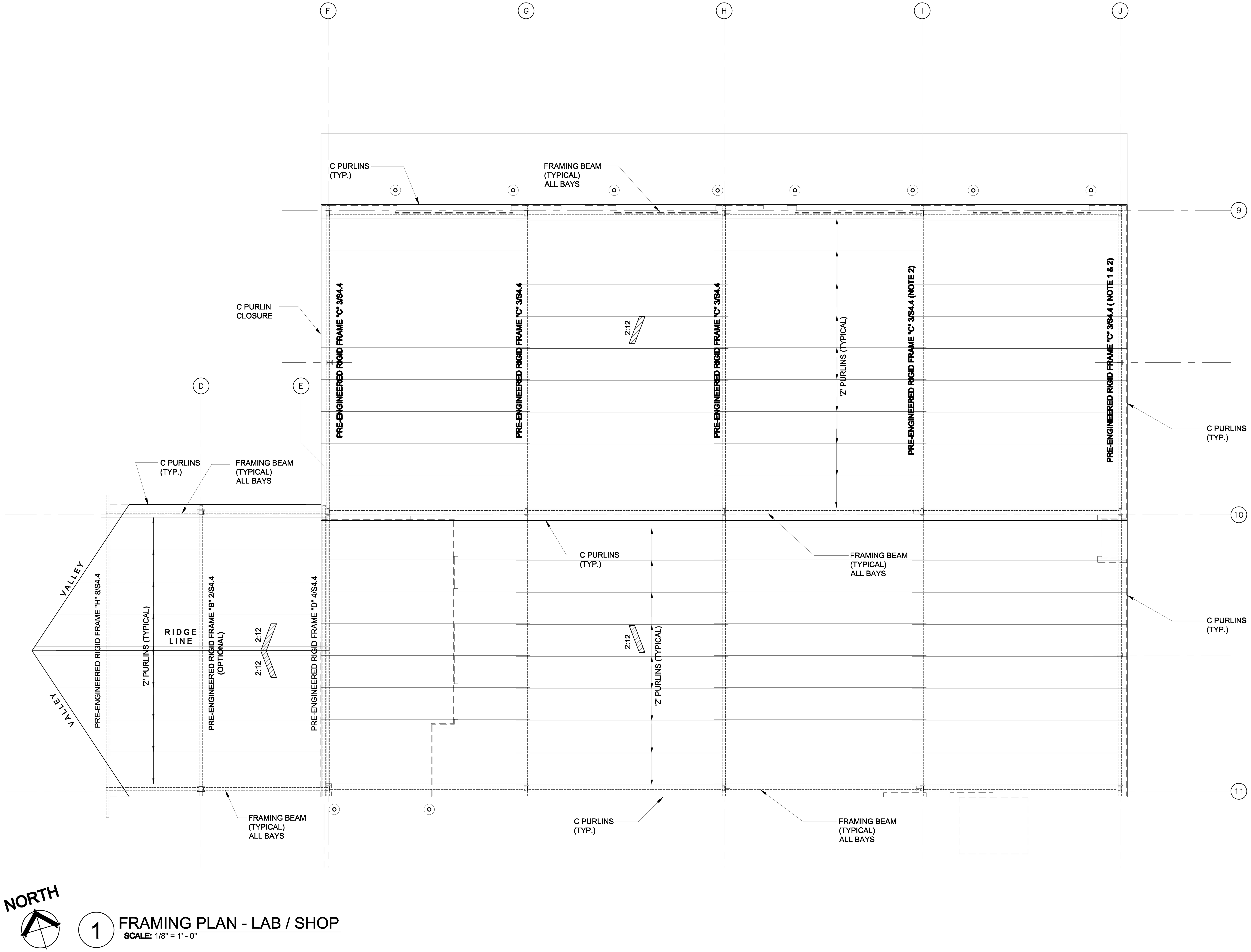

1 FRAMING PLAN - LAB / SHOP
SCALE: 1/8" = 1' - 0"

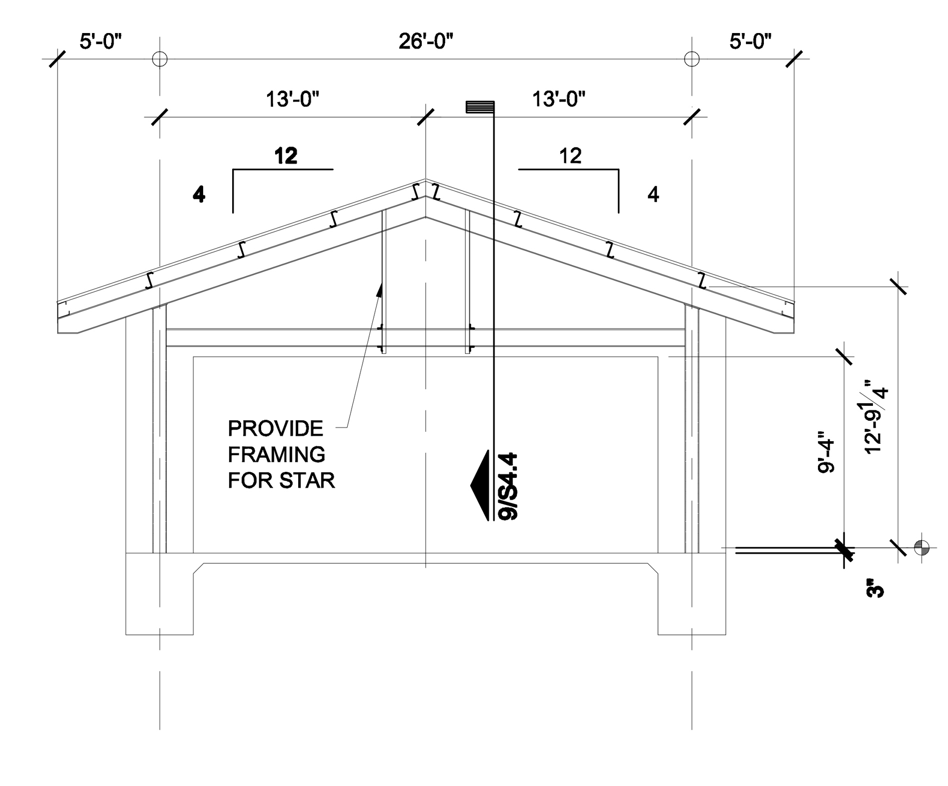

2 PRE-ENGINEERED RIGID FRAME "I"
SCALE: 1/8" = 1' - 0"

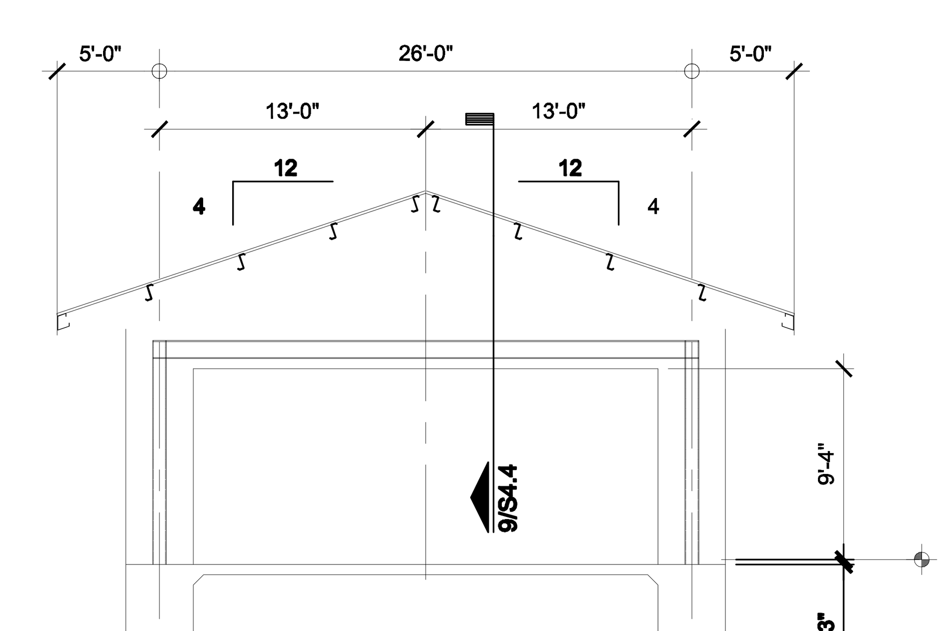

3 PRE-ENGINEERED RIGID FRAME "J"
SCALE: 1/8" = 1' - 0"

Texas Department of Transportation
125 E. 11th Street
Austin, Texas 78701-2483
(512) 416-3048

Copyright © 2005 Texas Department of Transportation

THIS DOCUMENT IS RELEASED FOR THE PURPOSE OF INFORMATION ONLY
NOT FOR REGULATORY APPROVAL, PERMITTING, OR CONSTRUCTION.

WACO AREA ENGINEER AND MAINTENANCE FACILITY
WACO, MCLENNAN COUNTY WACO DISTRICT

Revisions

Drawn by: S. F.
Project No. CBC4704-00672
Date 05.21.2007
Sheet No. S4.2 of sheets

FRAMING PLAN - LAB / SHOP

NOTE: THIS DRAWING WAS CREATED FOR PRODUCTION ON 22" x 34" SHEET SIZE. DO NOT SCALE PRINTS.

NOTES:
1. PROVIDE FRAME WITH REQUIRED CONNECTIONS FOR FUTURE ADDITION.
2. COLUMN AT GRID LINE M SHALL NOT BE PART OF RIGID FRAME.

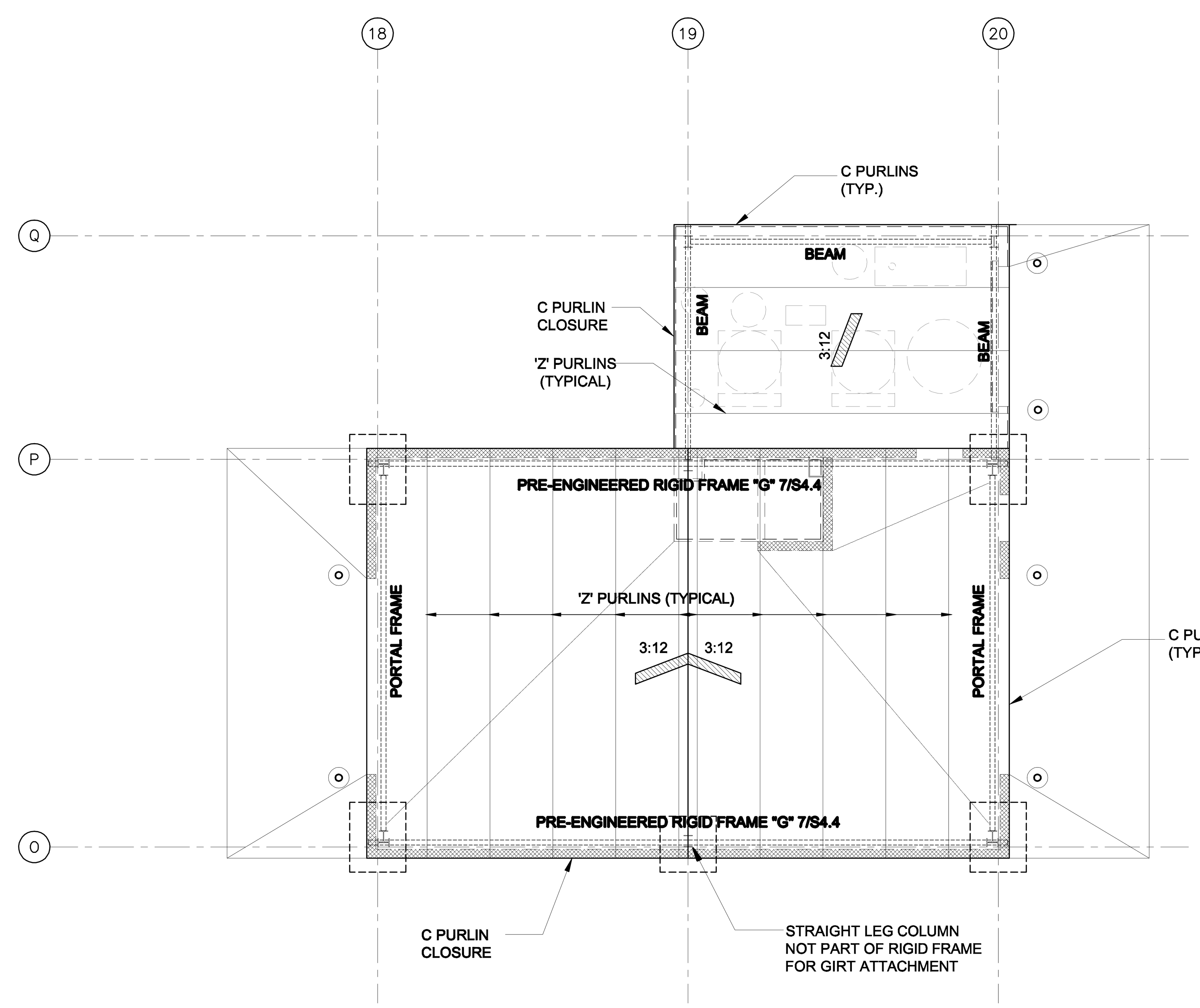

NOTE: PROVIDE OVERHEAD DOOR FRAME AT EACH OPENING FOR FUTURE OVERHEAD DOOR. ARANGE PORTAL FRAME ACCORDINGLY.

2 FRAMING PLAN - WASH BAY
SCALE: 1/8" = 1' - 0"

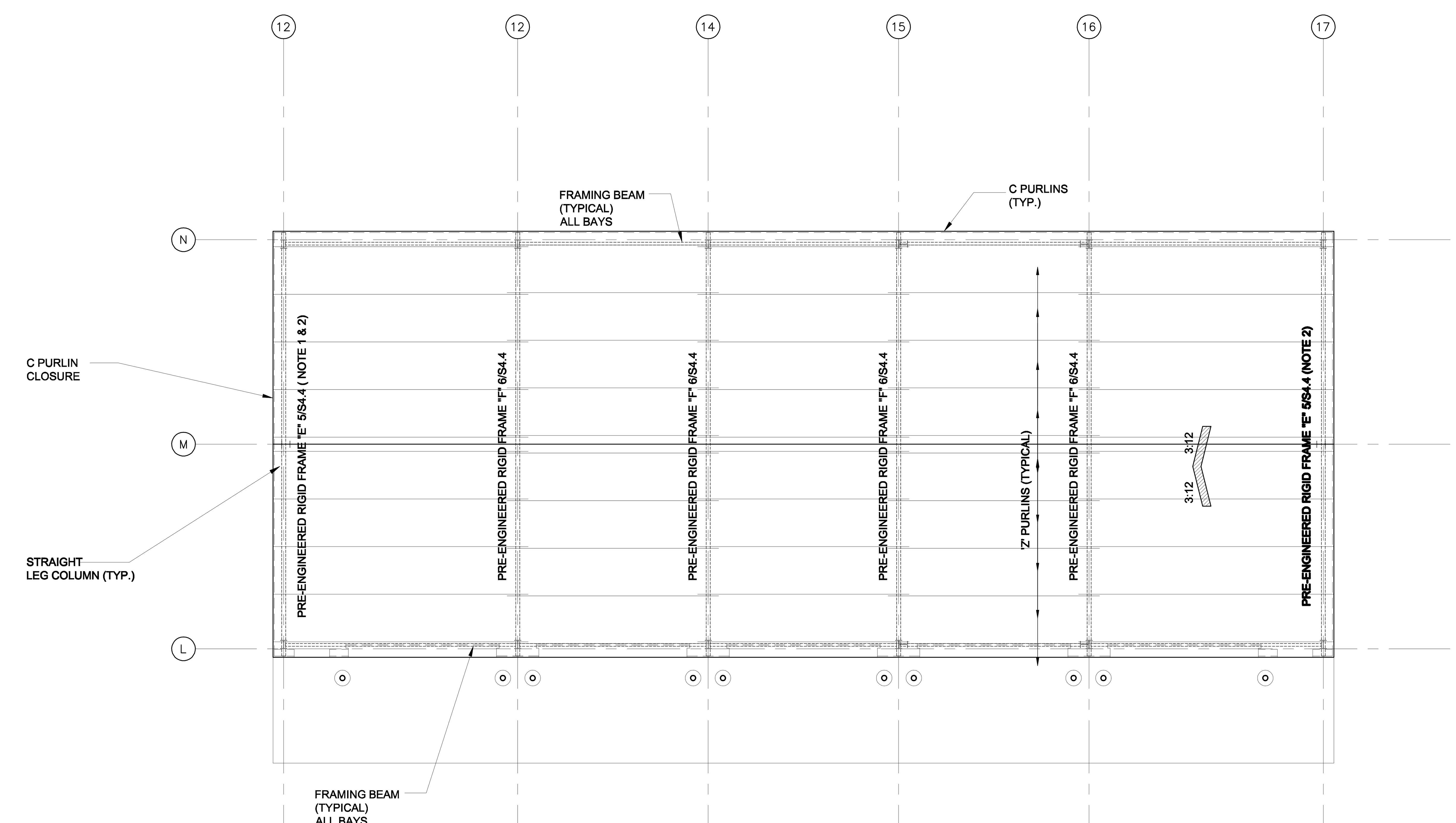

NORTH

1 FRAMING PLAN - VEHICLE STORAGE
SCALE: 1/8" = 1' - 0"

Texas Department of Transportation

INFORMATION ONLY
NOT FOR REGULATORY APPROVAL, PERMITTING, OR CONSTRUCTION.

WACO AREA ENGINEER AND MAINTENANCE FACILITY
WACO, MCLENNAN COUNTY
WACO DISTRICT

Revisions

Drawn by: S. F.
Project No. CBC4704-00672
Date 05.21.2007
Sheet No.
S4.3
of sheets

FRAMING PLAN - VEHICLE STORAGE

NOTE: THIS DRAWING WAS CREATED FOR PRODUCTION ON 22" x 34" SHEET SIZE. DO NOT SCALE PRINTS.

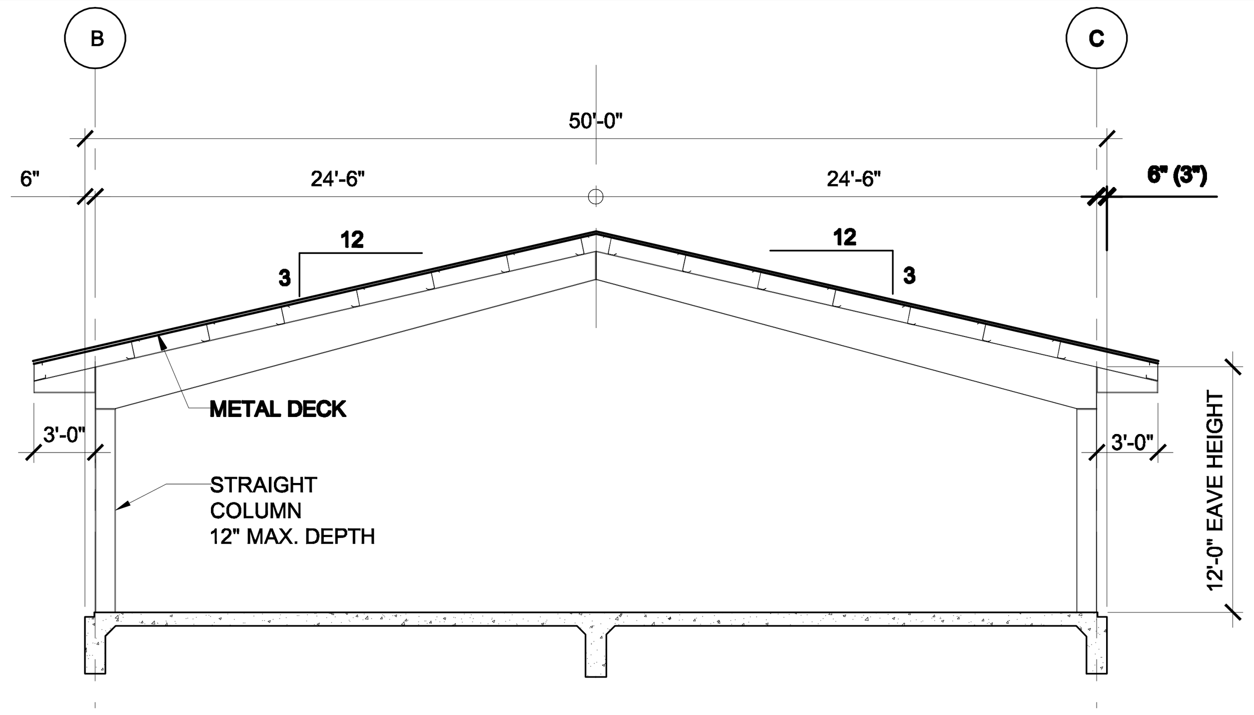

1 PRE-ENGINEERED RIGID FRAME "A"
SCALE: 1/8" = 1' - 0" STRAIGHT COLUMNS

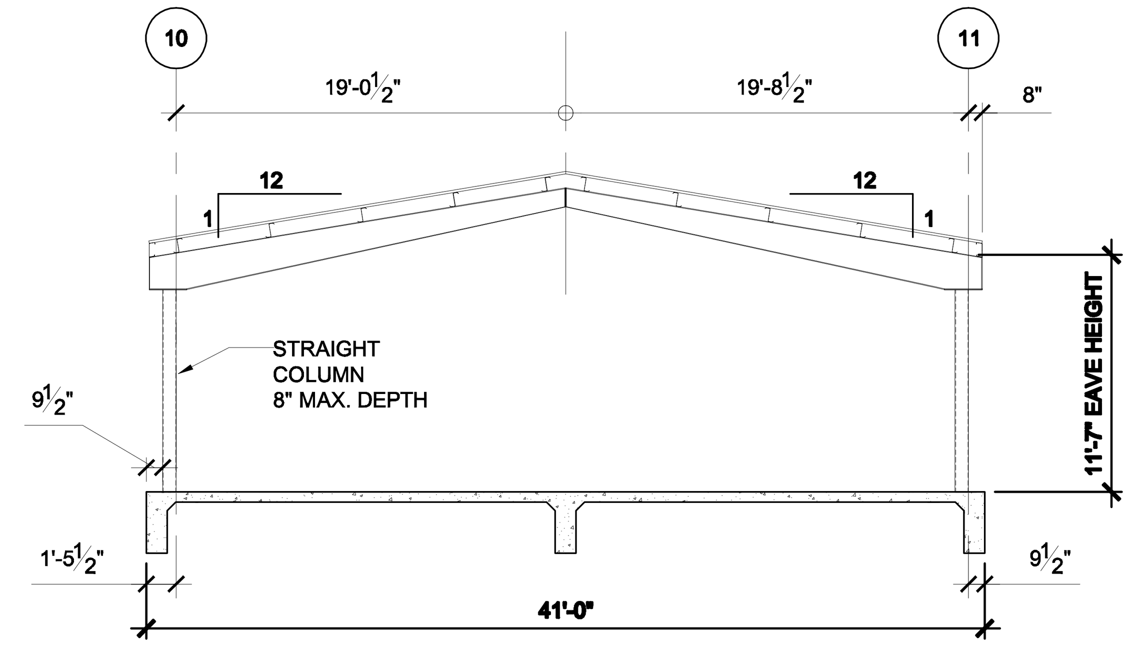

NOTE: FRAME AT COLUMN LINE D IS OPTIONAL. M. B. M. SHALL TAKE INTO ACCOUNT THE WEIGHTS OF THE MECHANICAL EQUIPMENT FOR THE DESIGN OF PURLINS TO SPAN THE LENGTH OF THE BREEZWAY.

2 PRE-ENGINEERED RIGID FRAME "B"
SCALE: 1/8" = 1' - 0" HALLOW STRUCTURAL COLUMNS

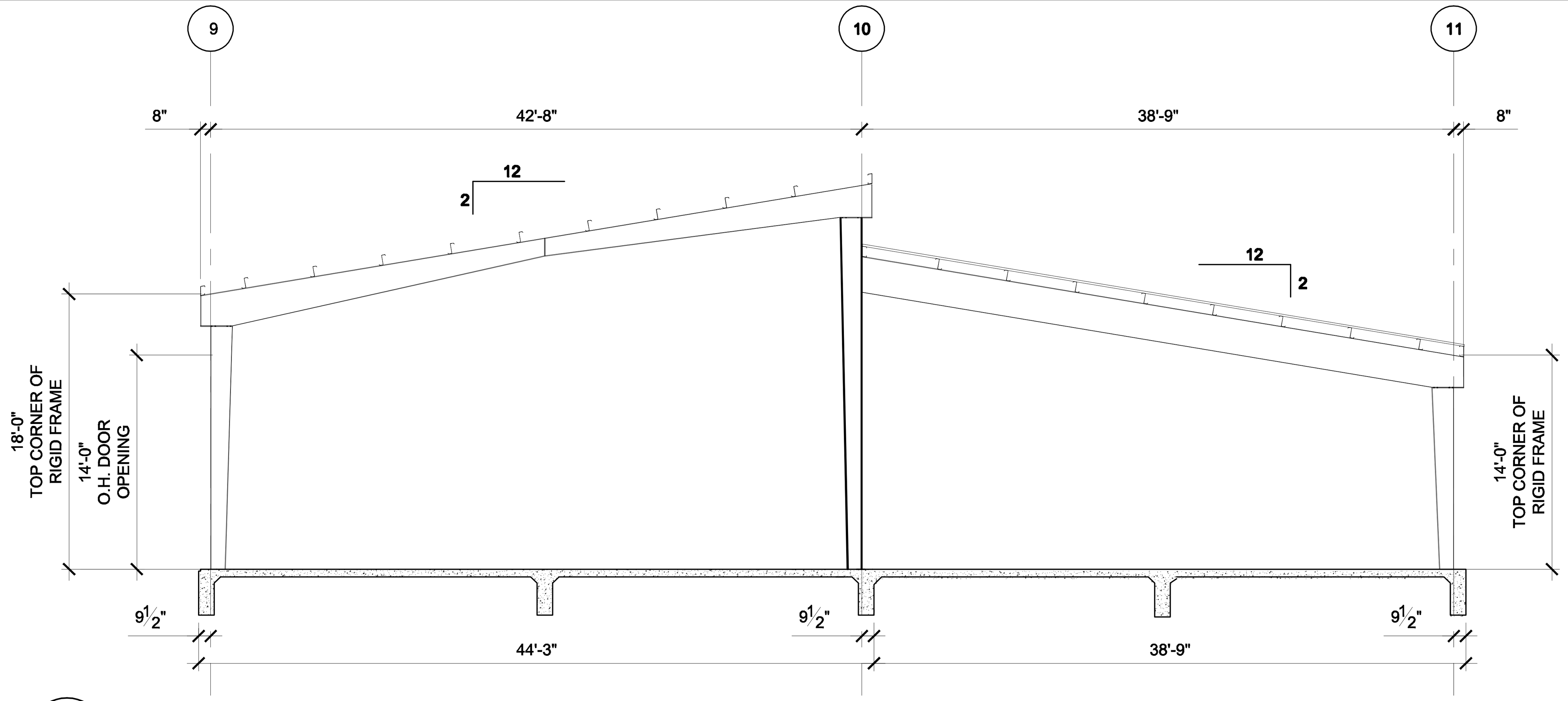

3 PRE-ENGINEERED RIGID FRAME "C"
SCALE: 1/8" = 1' - 0"

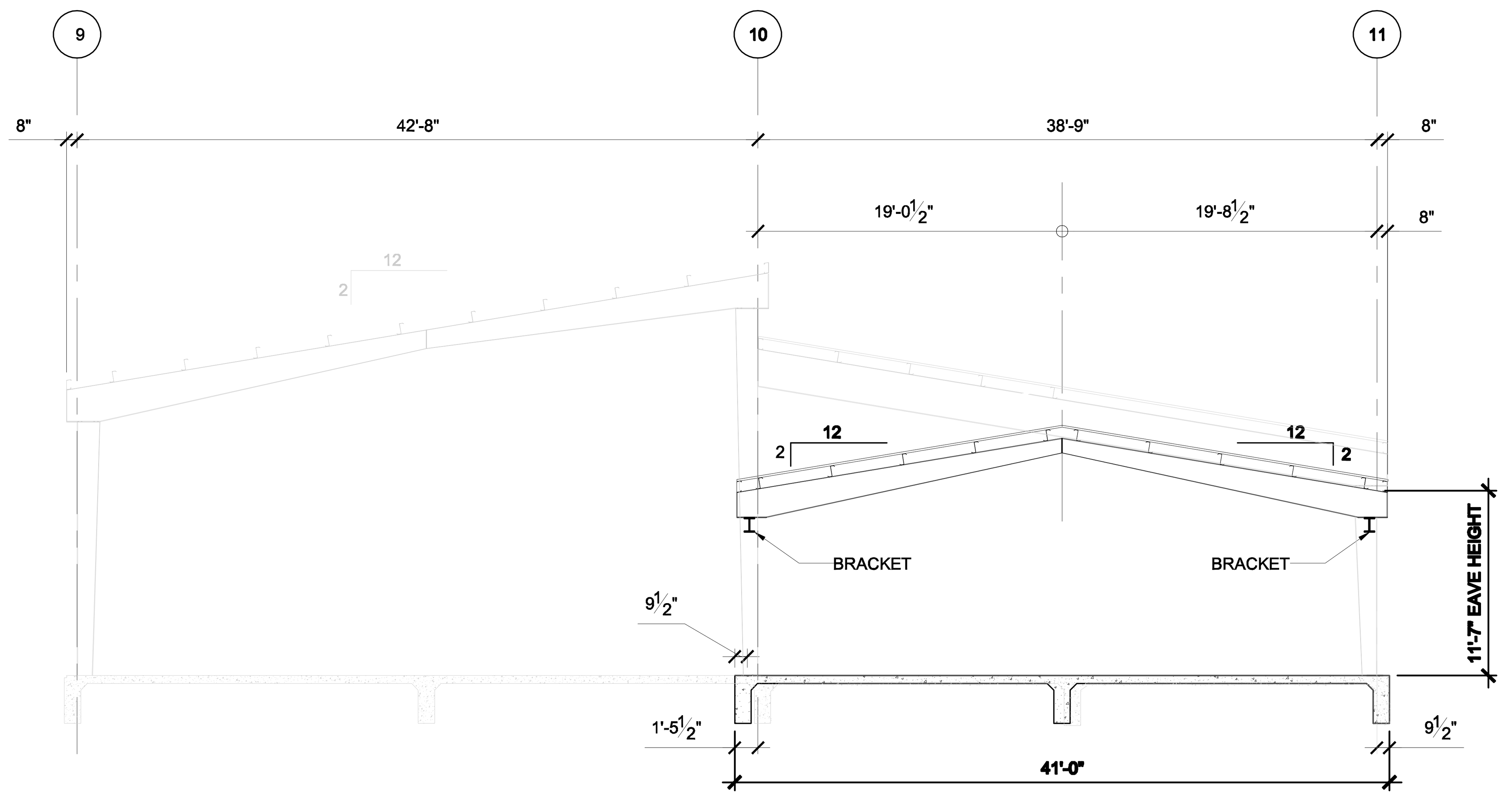

4 PRE-ENGINEERED RIGID FRAME "D"
SCALE: 1/8" = 1' - 0"

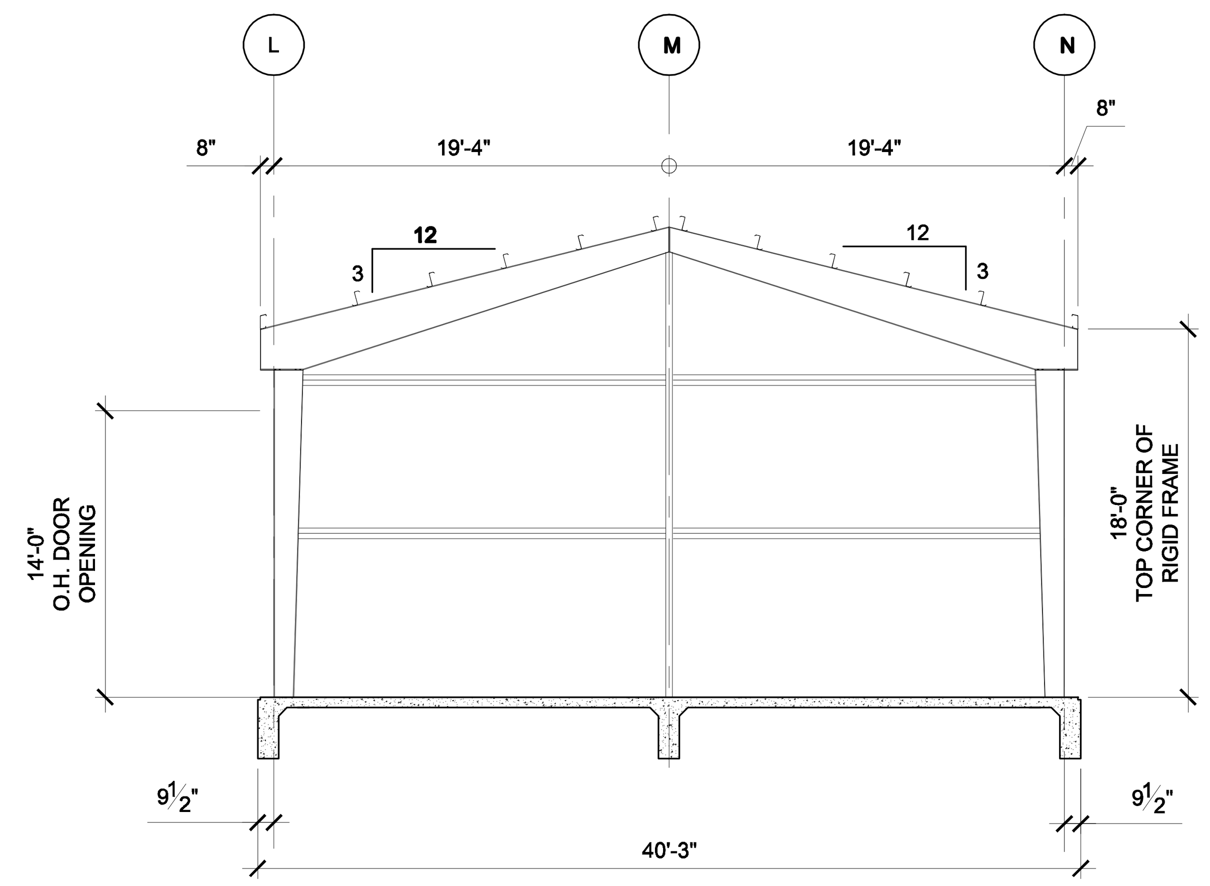

5 PRE-ENGINEERED RIGID FRAME "E"
SCALE: 1/8" = 1' - 0" RIGID FRAME FOR FUTURE ADDITION

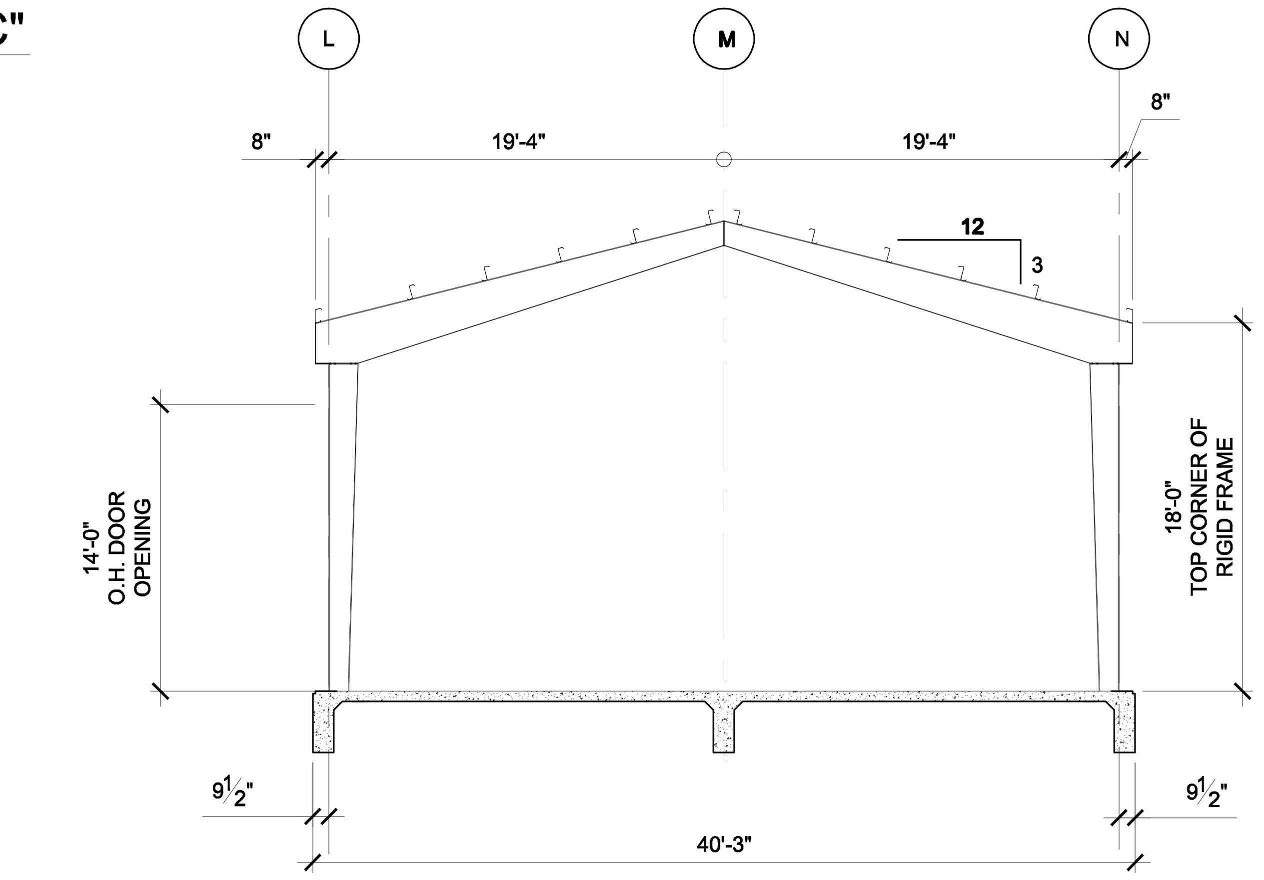

6 PRE-ENGINEERED RIGID FRAME "F"
SCALE: 1/8" = 1' - 0"

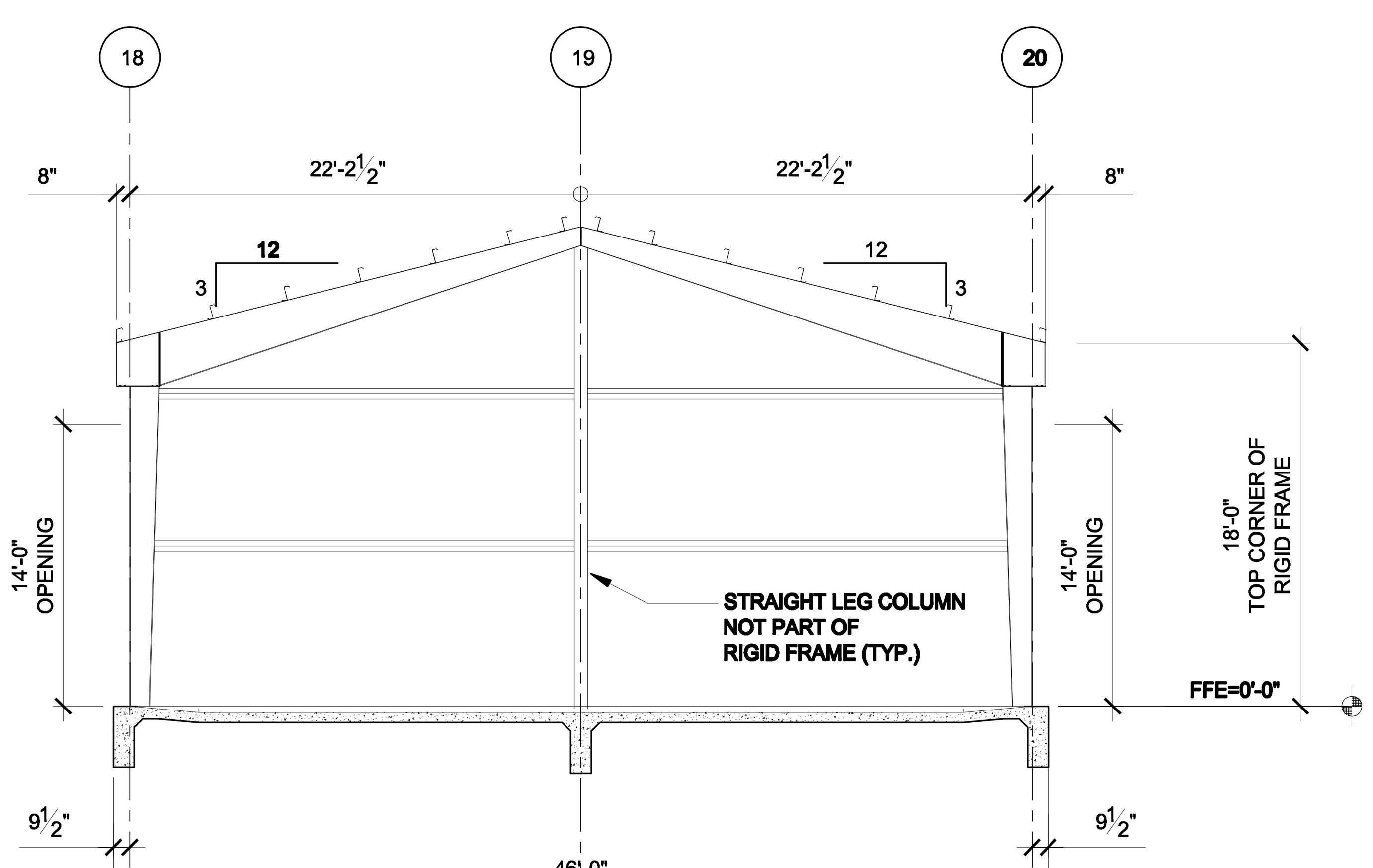

7 PRE-ENGINEERED RIGID FRAME "G"
SCALE: 1/8" = 1' - 0"

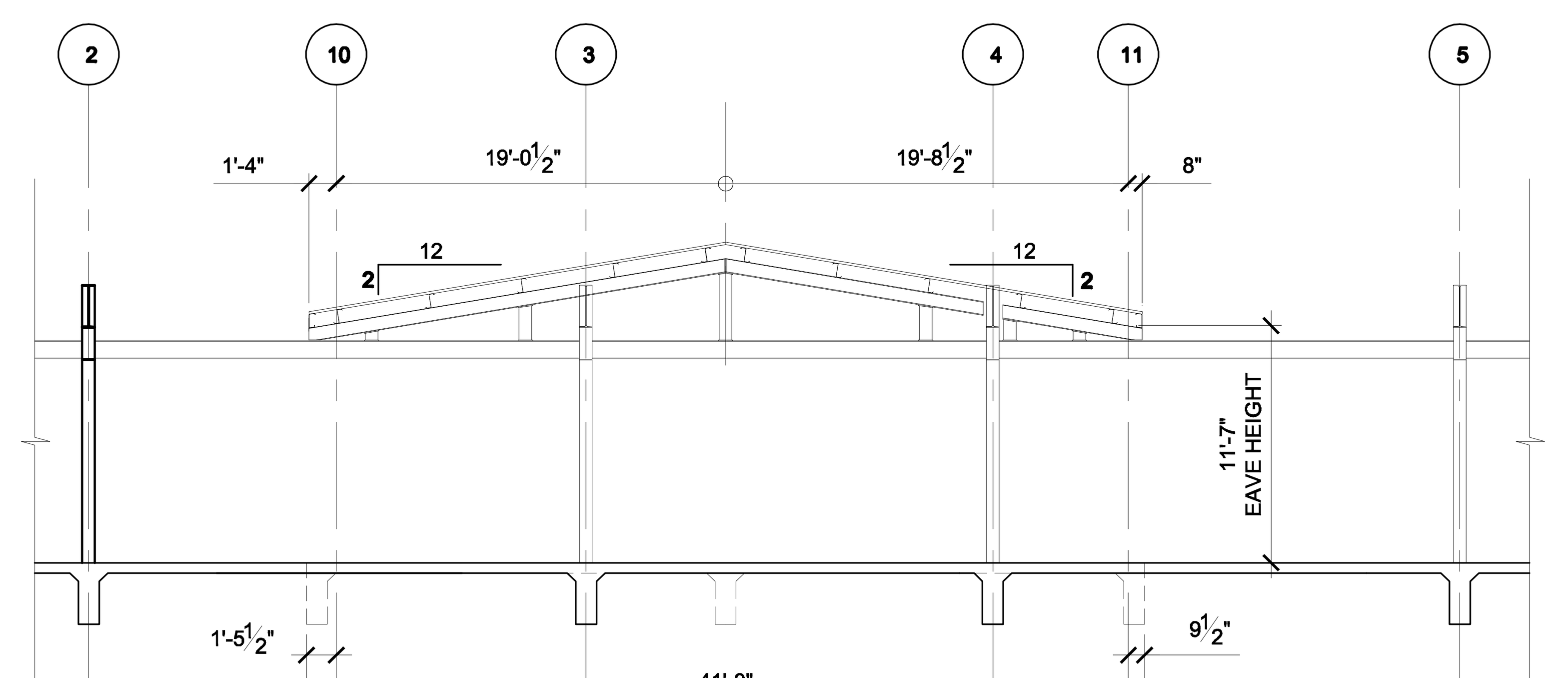

8 PRE-ENGINEERED RIGID FRAME "H"
SCALE: 1/8" = 1' - 0"

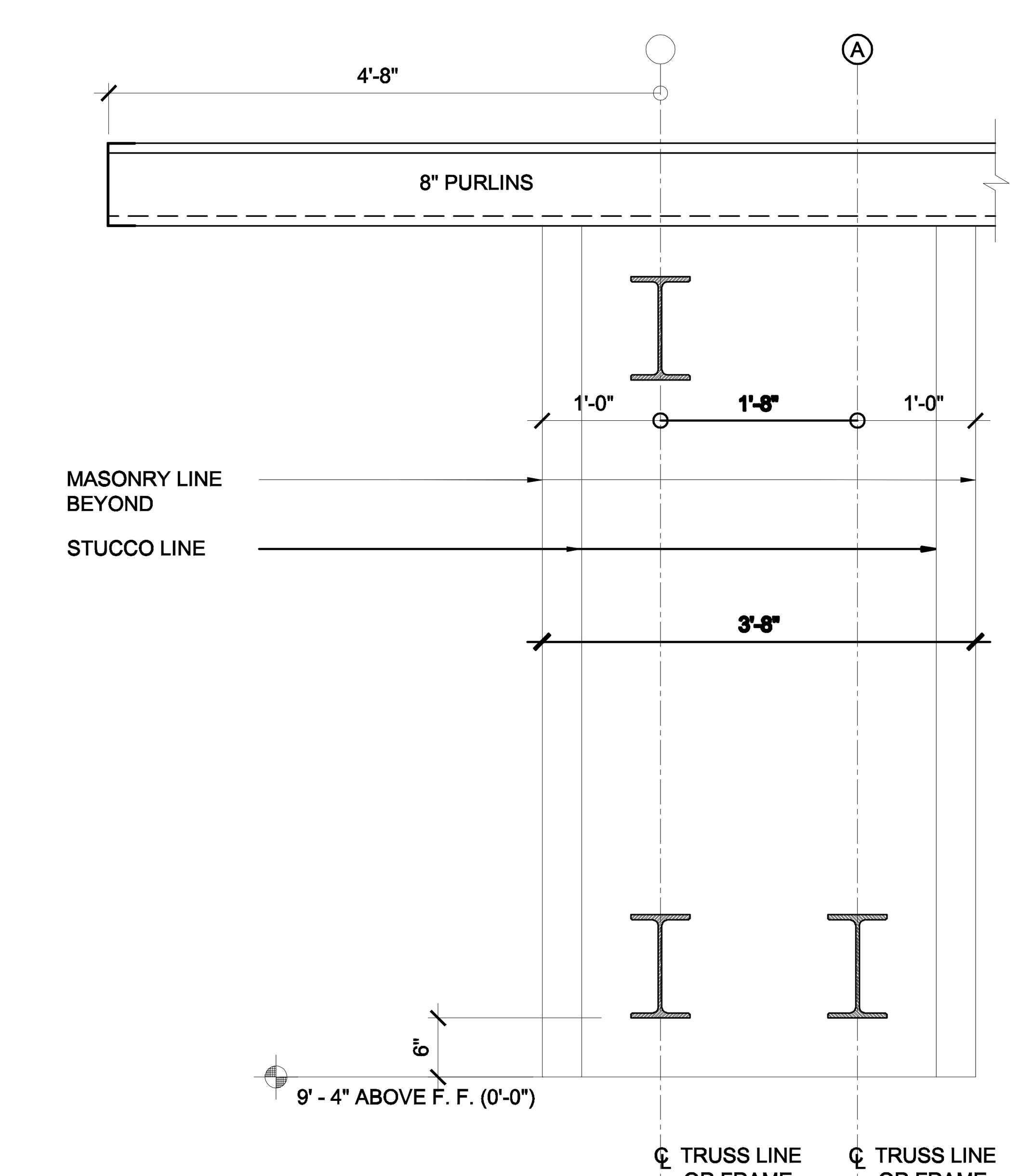

9 FRAME SECTION
SCALE: 3/4" = 1' - 0"

FRAMING SECTION

NOTE: THIS DRAWING WAS CREATED FOR PRODUCTION ON 22" x 34" SHEET SIZE. DO NOT SCALE PRINTS.

Texas Department of Transportation
125 E. 11th Street
Austin, Texas 78701-2483

THIS DOCUMENT IS RELEASED FOR THE PURPOSE OF INFORMATION ONLY
NOT FOR REGULATORY APPROVAL, PERMITTING, OR CONSTRUCTION.

WACO AREA ENGINEER AND MAINTENANCE FACILITY
WACO, MCLENNAN COUNTY WACO DISTRICT

Revisions

Drawn by: S. F.
Project No. CBC4704-00672
Date 05.21.2007
Sheet No. S4.4 of sheets

APPLIES TO ALL M-SHEETS

GENERAL NOTES

1. NOTE THAT CONSTRUCTION DRAWINGS ARE DIAGRAMMATIC BY THEIR NATURE, AND ARE NOT INTENDED TO SHOW EVERY CONNECTION IN DETAIL OR EVERY PIPE, DUCT OR CONDUIT IN ITS EXACT LOCATION. FEATURES AND COMPONENTS NOT SHOWN ARE SUBJECT TO THE REQUIREMENTS OF STANDARDS REFERENCED ELSEWHERE IN THE CONSTRUCTION DOCUMENTS. THE CONTRACTOR SHALL COORDINATE THE VARIOUS TRADES IN ORDER TO AVOID INTERFERENCE BETWEEN THE VARIOUS SEGMENTS OF THE PROJECT.
2. ALL WORK SHALL BE INSTALLED PARALLEL OR PERPENDICULAR TO THE BUILDING LINES.
3. REFER TO SPECIFICATIONS FOR ADDITIONAL INFORMATION. THE SPECIFICATIONS REPRESENT AN ESSENTIAL PART OF THE CONSTRUCTION DOCUMENTS.
4. DIFFUSERS SHALL BE CENTERED IN THE ROOM OR AREA INDICATED. DIFFUSERS SHALL ALSO BE SPACED EVENLY AS SHOWN IN THE PLAN. COORDINATE WITH THE REFLECTED CEILING PLAN FOR EXACT LOCATIONS.
5. ALL DUCTWORK DIMENSIONS INDICATED IN PLANS ARE CLEAR UNOBSTRUCTED FREE AREA DIMENSIONS.
6. SINGLE WALL RECTANGULAR DUCTWORK SHALL BE FABRICATED FROM SHEETMETAL, INSTALLED AND TESTED AS RECOMMENDED BY SMACNA AS A MINIMUM STANDARD. NOTE THAT THE SPECIFICATIONS MAY STIPULATE STRICTER CONSTRUCTION REQUIREMENTS WHICH SHALL BE COMPLIED TO.
7. INSULATE ALL DUCTWORK INCLUDING SUPPLY AIR, RETURN AIR, OUTSIDE AIR, WITH EXTERNAL 2" BLANKET TYPE INSULATION. INSULATION SHALL HAVE A FOIL, REINFORCED KRAFT PAPER (FRK) VAPOR BARRIER FACING, AS SPECIFIED.
8. DUCT WORK TRANSITIONS SHALL HAVE MAXIMUM 15° CONVERGENCE, UNLESS NOTED OTHERWISE.
9. CHANGES IN DIRECTION IN ROUND DUCT WORK SHALL BE MADE USING 4–SECTION ADJUSTABLE "90's" OR 3–SECTION ADJUSTABLE "45's".
10. ALL 90° TURNS IN RECTANGULAR DUCT SHALL BE INSTALLED WITH TURNING VANES.
11. SUPPORT ALL DUCTWORK WITH UNISTRUT AND HANGERS AS SPECIFIED, AND PER MANUFACTURERS RECOMMENDATIONS.
12. ALL DROPS TO SUPPLY DIFFUSERS, RETURN DUCTS, EXHAUST GRILLES, AND ALL OUTSIDE AIR SUPPLIES, SHALL HAVE VOLUME BALANCING DAMPERS INSTALLED AT MAIN DUCT TAP.
13. ALL TAP CONNECTIONS IN RECTANGULAR DUCT FOR ROUND SHEETMETAL OR FLEXIBLE DUCT SHALL BE INSTALLED USING CONICAL BELLMOUTH WITH 1" FLANGE AND GASKET SPIN–IN CONNECTOR WITH DAMPER INCLUDING 2" BUILD OUT, NYLON BUSHINGS, LOCKING QUADRANT AND HANDLE.
14. DUCT SEALANT SHALL BE LATEX BASED, WATER SOLUBLE. SOLVENT BASED DUCT SEALANT IS PROHIBITED.
15. ALL AREAS: FLEXIBLE METAL DUCT IS PERMITTED AT THE DIFFUSERS, MAXIMUM LENGTH IS 4FT. ALL FLEXIBLE METAL DUCT SHALL HAVE A FLAME RETARDANT VAPOR BARRIER.
16. CONNECTIONS OF "AHU" UNITS TO DUCTWORK SHALL BE MADE WITH FLEXIBLE VIBRATION DAMPENING CONNECTIONS AS SPECIFIED.
17. USE SPRING ISOLATORS ON ALL SUSPENDED MECHANICAL EQUIPMENT. VIBRATION ISOLATION SHALL BE AS SPECIFIED.
18. ALL REFRIGERANT LINES SHALL BE INSULATED WITH 1/2" ARMAFLEX (OR APPROVED EQUAL) CLOSED CELL FOAM PIPE INSULATION. INSULATION INSTALLED WHERE EXPOSED TO SUNLIGHT SHALL BE PAINTED WITH TWO COATS OF WHITE EXTERIOR GRADE LATEX PAINT. INDIVIDUALLY INSULATE THE LIQUID AND VAPOR REFRIGERANT LINES, NEATLY BUNDLE THE REFRIGERANT LINES TOGETHER (FOR THE ENTIRE LENGTH), WITHOUT COMPRESSING INSULATION.
19. CONDENSATE LINES SHALL BE MINIMUM 3/4" TYPE "K" COPPER, INSTALLED AS SPECIFIED FOR WATER PIPING, INSULATED WITH SAME MATERIAL AS DESCRIBED FOR FREON LINES.
20. OUTSIDE AIR INTAKES SHALL BE INSTALLED AS INDICATED. MAINTAIN A DISTANCE OF AT LEAST 10 FT AWAY FROM ANY EXHAUST FAN, FLUE, COMBUSTION AIR VENT, AND/OR SANITARY SEWER VENT. LOCATE INTAKES ON OFFICE BUILDING AT LEAST 10 FT. BEHIND ROOF RIDGE CAP.
21. ROOF CONTRACTOR SHALL INSTALL ALL ROOF PENETRATIONS IN THE APPROXIMATE LOCATIONS SHOWN IN PLANS AS PER ARCHITECTURAL DRAWINGS AND SPECIFICATIONS.
22. ON PAD MOUNTED CONDENSING UNITS INSTALL 4" SQUARE NEOPRENE AND CORK VIBRATION ISOLATION PADS ON ALL FOUR CORNERS. CONDENSING UNITS SHALL BE INSTALLED ON AN EQUIPMENT PAD (SEE THE ARCHITECT PLANS). MAINTAIN 36" CLEARANCE BETWEEN EACH UNIT, MINIMUM 48" FROM THE BUILDING STRUCTURE, AND MINIMUM 6" TO EDGE OF PAD, ALL SIDES. CONDENSING UNITS LARGER THAN FIVE TONS SHALL HAVE AN ADDITIONAL ISOLATION PAD ON EACH SIDE LOCATED IN THE CENTER OF THE UNIT AND 72" CLEARANCE FROM ALL OTHER UNITS.
23. SLEEVE ALL WALL PENETRATIONS WITH SLEEVE 2 PIPE SIZES LARGER THAN PENETRATING PIPE. SLEEVE AND PENETRATING PIPE SHALL BE CONSTRUCTED FROM THE SAME MATERIAL. MAINTAIN INSULATION THROUGH SLEEVES.
24. ALL EXTERIOR, SLAB AND CONDITIONED TO NON–CONDITIONED PENETRATIONS, PACK ANNULUR SPACE WITH MINERAL WOOL. SEAL EACH EXTERIOR END AND TOP END OF SLAB PENETRATION WITH SEALANT (SEE ARCHITECTURAL SPECIFICATIONS).
25. FIRE CAULK ALL PIPE PENETRATIONS WHERE ARCHITECTURAL PLANS CALL FOR FIRE RATED CONSTRUCTION WALLS. STOP INSULATION SHORT OF SLEEVE FILL ANNULAR SPACES WITH FIRE RATED CAULK.

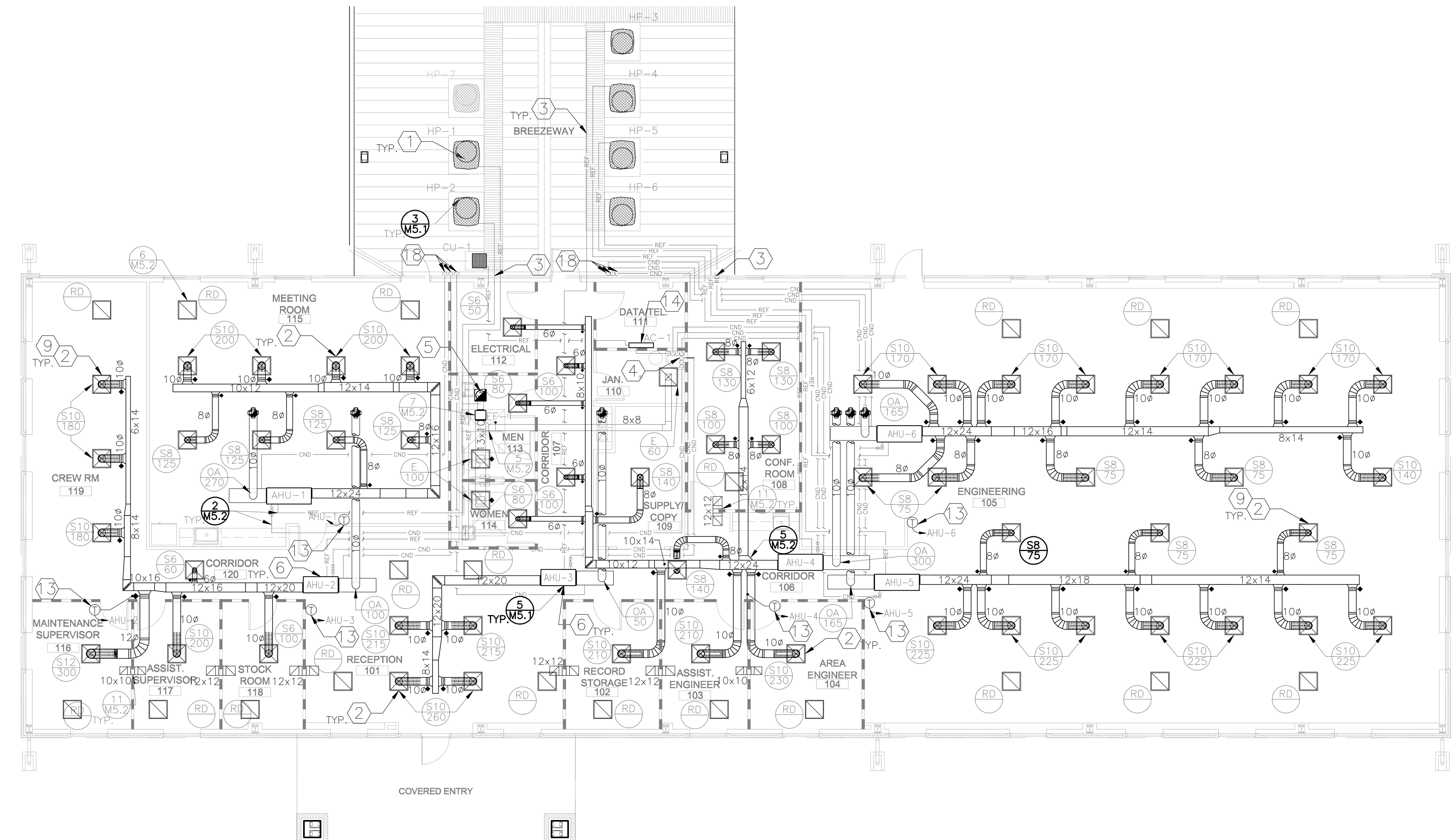

1 FLOOR PLAN - OFFICE BUILDING

SCALE: 1/8" = 1'-0"

0' 2' 4' 8' 16'

KEYED NOTES "⬡"

1. INSTALL VIBRATION ISOLATION PADS. MAINTAIN CLEARANCES BETWEEN EACH UNIT AND EDGE OF PAD AS DESCRIBED IN THE GENERAL NOTES. ANCHOR OUTDOOR UNIT TO ROOF CURB WITH FOUR LOOSE CABLES WITH ONE END BOLTED TO THE OUTDOOR UNIT AND THE OTHER END BOLTED TO THE CURB. CABLES SHALL BE LOOSE ENOUGH TO NOT TRANSMIT VIBRATION, BUT SHORT ENOUGH TO PREVENT THE UNIT FROM MOVING.
2. CONTRACTOR MAY USE FLEXIBLE METAL DUCT AS DESCRIBED IN THE GENERAL NOTES.
3. ROUTE FREON LINES AND CONTROL WIRING ABOVE CEILING TO EXTERIOR WALL. PENETRATE EXTERIOR WALL WITH FREON LINES AND CONTROL WIRING TO BREEZE WAY CAVITY LOCATED ABOVE SOFFIT ACCESS PANELS. ROUTE FREON LINES THROUGH CAVITY ABOVE ACCESS PANELS TO ROOF CURBS. DAYLIGHT FREON LINES AND CONTROL WIRING THROUGH THE SIDE OF THE ROOF CURB, JUST BELOW PROVIDED FLASHING. INSULATE AND SEAL EXTERIOR WALL PENETRATION. SEAL REFRIGERANT LINE PENETRATION THROUGH SIDE OF ROOF CURB. CONTROL WIRING SHALL BE IN EMT CONDUIT ABOVE CEILING AND IN BREEZEWAY CAVITY. EXPOSED CONDUIT SHALL BE LIQUID TIGHT FLEXIBLE METAL CONDUIT.
4. ROUTE 3/4" HARDDRAWN TYPE "K" COPPER PIPING CONDENSATE DRAIN FROM EACH INDOOR UNIT TO MOP SINK. TERMINATE EACH CONDENSATE DRAIN OVER MOP SINK DRAIN, MAINTAIN SLOPE 1/8" TO 1/4" PER FOOT WITH AN ELBOW INSTALLED IN THE DOWN POSITION. PROVIDE 1" AIR GAP ABOVE MOP SINK.
5. DISCHARGE EXHAUST AIR TO ROOF JACK. SUSPEND EXHAUST FAN WITH UNISTRUT AND SPRING VIBRATION ISOLATORS.
6. PROVIDE AND INSTALL PLEATED FILTERS AND SUPPLY AND RETURN FLEXIBLE CONNECTORS FOR EACH INDOOR UNIT PER MANUFACTURER RECOMMENDATIONS.
7. INSTALL AND PROVIDE A DUCT MOUNTED SMOKE DETECTOR IN THE RETURN AND THE SUPPLY AIR DUCT. SMOKE DETECTOR SHALL SHUT DOWN AHU–7. THE SMOKE DETECTOR IN THE SUPPLY SHALL BE LOCATED JUST BEFORE THE FIRST BRANCH AIR DUCT.
8. NOT USED.
9. ALL GRILLES AND DIFFUSERS IN ALL SPACES SHALL BE COORDINATED WITH BUILDING STRUCTURE AND SUPPORTED AT ALL FOUR CORNERS. (SEE ARCHITECTURAL AND STRUCTURAL DRAWINGS).
10. NOT USED.
11. NOT USED.

.....CONTINUED KEYED NOTES "⬡"

12. INSTALL AND PROVIDE A 4"ø LISTED TYPE "B" VENT EXTEND 24" ABOVE ROOF.
13. INSTALL THERMOSTAT ON WALL 48" A.F.F.
14. MOUNT INDOOR UNIT CENTERED ON WALL 7FT ABOVE FINISHED FLOOR TO THE BOTTOM OF UNIT, COORDINATE WITH TRADES TO ENSURE UNIT DOES NOT OBSTRUCT OTHER EQUIPMENT IN ROOM.
15. TRANSITION DUCT TO FIT CURB AND DAMPER. DUCT INTAKE AIR PARALLEL WITH ROOF DECK DROP DOWN AT WALL TO FLOOR 16"X16", 18 GAUGE SHEETMETAL LEAVE BOTTOM OF DUCT OPEN 24" A.F.F. PROVIDE AND INSTALL BIRDSCREEN.
16. ROUTE CONDENSATE LINE DOWN WALL INSIDE OF RADIO ROOM AND PENETRATE SLAB TO TIE INTO SHOWER DRAIN. INSTALL AN AIR GAP FITTING IN CONDENSATE LINE ON THE WALL INSIDE OF RADIO ROOM.
17. INSTALL BOTTOM OF LOUVER 10FT A.F.F. COORDINATE WITH BUILDING STRUCTURE. (SEE ARCHITECTURAL AND STRUCTURAL DRAWINGS). INSTALL ASSEMBLY TO MANUFACTURER RECOMMENDATIONS. SECURE THE MOUNTING PLATFORM TO BUILDING BEAM. DUCT FAN DISCHARGE TO LOUVER.
18. STUB SECONDARY CONDENSATE LINE FROM END OF AHU DRAIN PAN AND ROUTE TO OUTSIDE OF BUILDING AS INDICATED IN PLAN. MAINTAIN A SLOPE OF 1/4" PER FOOT. STUB DOWN THRU SOFFIT.
19. INSTALL EXHAUST FAN ON ROOF CURB.
20. COORDINATE WITH ELECTRICAL. MECHANICAL SHALL SUPPLY ALL THERMOSTATS. ELECTRICAL SHALL PROVIDE WIRE AND CONDUIT AND INSTALL THE 120V THERMOSTATS WHICH SHALL CONTROL THE INFRARED HEATERS.
21. ROTATE INFRARED HEATER 20° TOWARD CENTER OF ROOM. INSTALL BOTTOM OF HEATER 14FT A.F.F.
22. NOT USED
23. EXTEND WELDING EXHAUST DUCTWORK UP AND EXIT THRU CLEAR STORY.
24. FIRE CAULK ALL PENETRATIONS IN FIRE WALL. (SEE GENERAL NOTES).
25. INSTALL BOTTOM OF LOUVER 18" A.F.F. COORDINATE WITH BUILDING STRUCTURE. (SEE ARCHITECTURAL AND STRUCTURAL DRAWINGS).

MECHANICAL LEGEND

	SUPPLY DIFFUSER		DUCT SIZE CHANGE
	RETURN GRILLE, OR EXHAUST		RECTANGULAR ELBOW WITH TURNING VANES
	VOLUME BALANCING DAMPER	XX / CFM	GRILLE TYPE / AIR FLOW
	VENTILATION LOUVER		RECTANGULAR "BOOT" TAP
T	THERMOSTAT		ROUND "CONICAL" FITTING WITH VOLUME DAMPER
S	REMOTE SENSOR		
H	HUMIDISTAT		STATIONARY SPLITTER WITH TURNING VANES AND DAMPER
# / X##	DETAIL NUMBER / SHEET DESIGNATOR		VAINED, RADIUS ELBOW

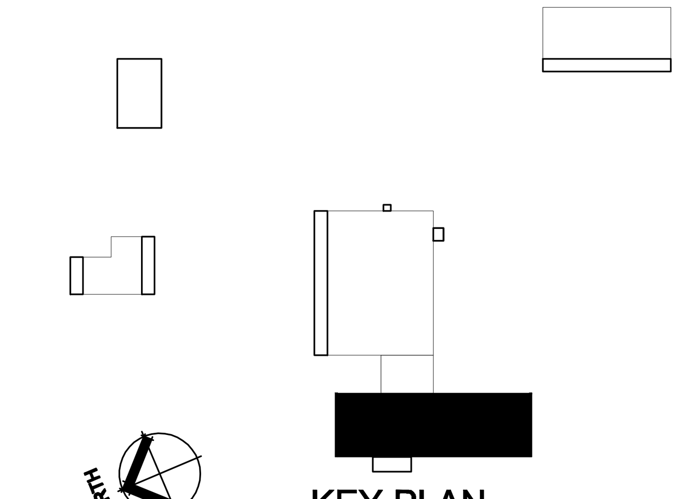

KEY PLAN

MECHANICAL PLAN - OFFICE BUILDING

NOTE: THIS DRAWING WAS CREATED FOR PRODUCTION ON 22" x 34" SHEET SIZE. DO NOT SCALE PRINTS.

Texas Department of Transportation
125 E. 11th Street
Austin, Texas 78701-2483
(512) 416-3848

Copyright © 2005 Texas Department of Transportation

THIS DOCUMENT IS RELEASED FOR THE PURPOSE OF INFORMATION ONLY
NOT FOR REGULATORY APPROVAL, PERMITTING, OR CONSTRUCTION.

WACO AREA ENGINEER AND MAINTENANCE FACILITY
WACO, MCLENNAN COUNTY
WACO DISTRICT

Revisions

Drawn by: KCR
Project No. CBC4704-00672
Date 05.21.2007
Sheet No.

SEE M2.1 FOR GENERAL AND KEYED NOTES

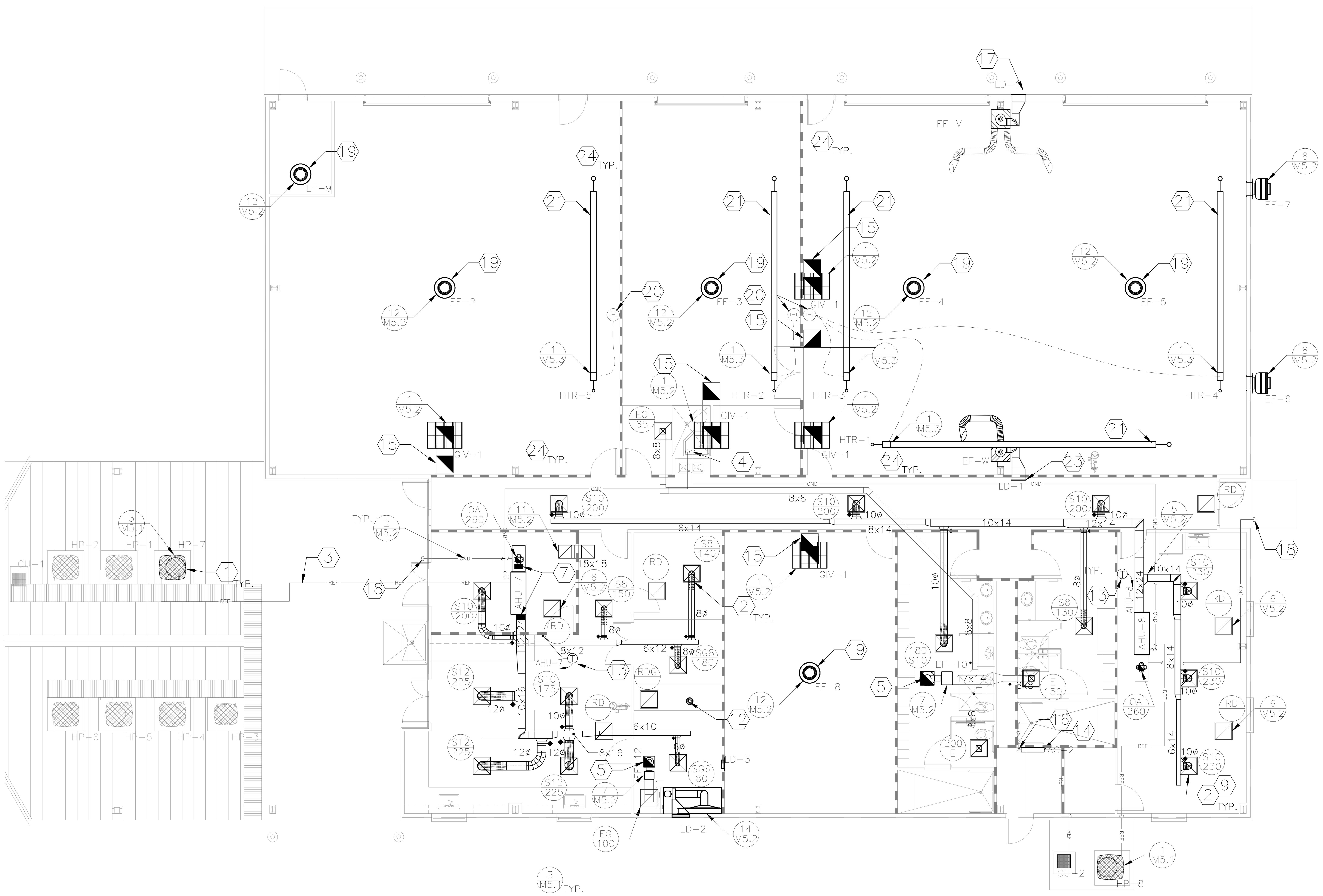

1 FLOOR PLAN - LAB/SHOP BUILDING
SCALE: 1/8" = 1'-0"

0' 2' 4' 8' 16'

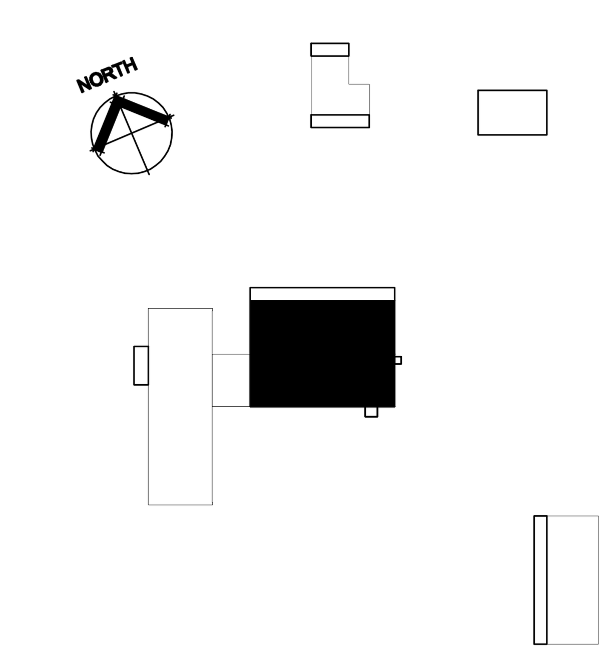

KEY PLAN

Texas Department of Transportation
125 E. 11th Street
Austin, Texas 78701-2483
(512) 416-2046
Copyright © 2005 Texas Department of Transportation

THIS DOCUMENT IS RELEASED FOR THE PURPOSE OF INFORMATION ONLY
NOT FOR REGULATORY APPROVAL, PERMITTING, OR CONSTRUCTION.

WACO AREA ENGINEER AND MAINTENANCE FACILITY
WACO, MCLENNAN COUNTY
WACO DISTRICT

Revisions

Drawn by: KCR
Project No. CBC4704-00672
Date 05.21.2007
Sheet No.
M2.2
of 8 M sheets

MECHANICAL PLAN - LAB/SHOP BUILDING
NOTE: THIS DRAWING WAS CREATED FOR PRODUCTION ON 22" x 34" SHEET SIZE. DO NOT SCALE PRINTS.

SEE M2.1 FOR GENERAL AND KEYED NOTES

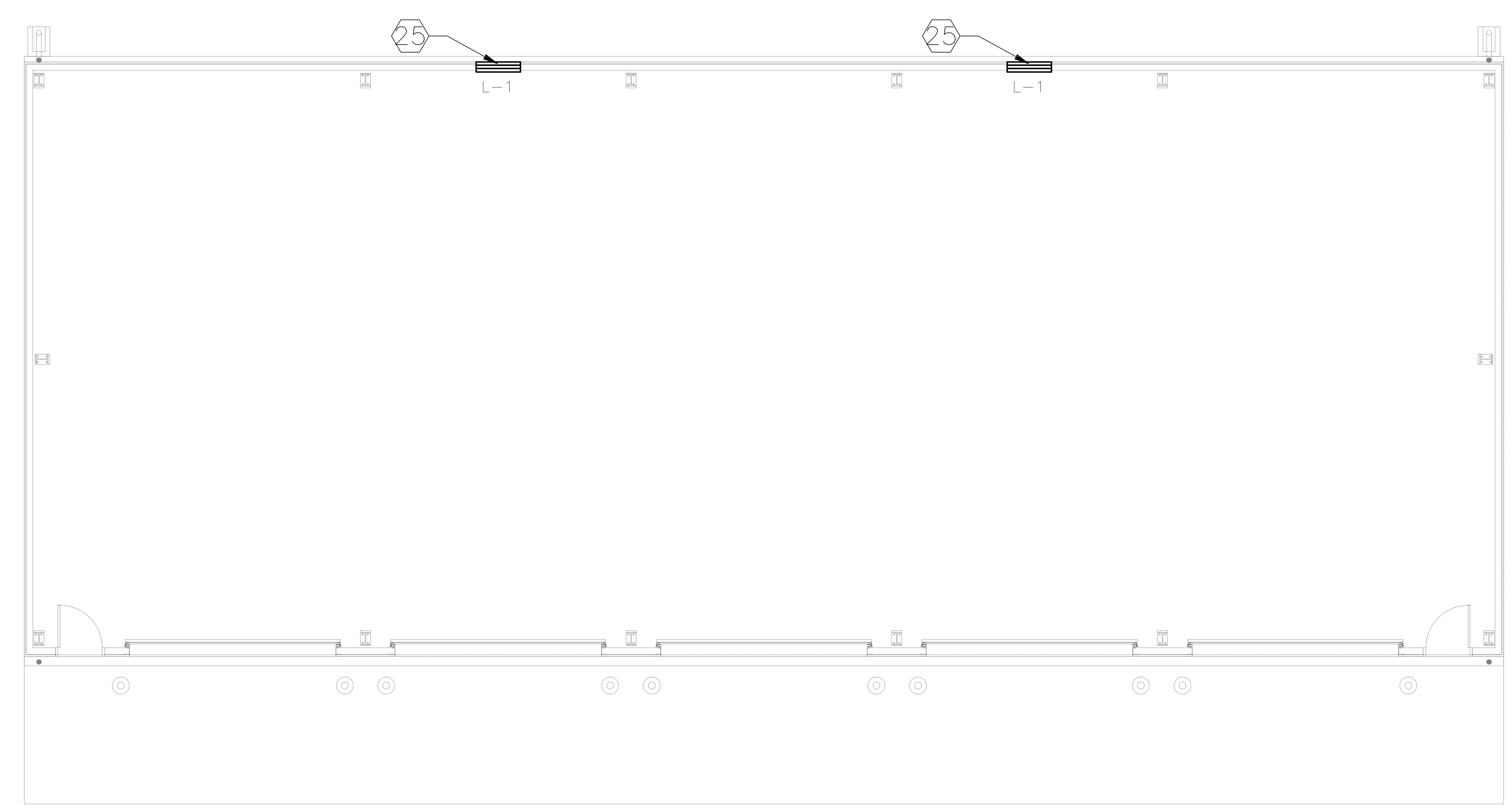

1 FLOOR PLAN - VEHICLE STORAGE BUILDING

SCALE: 1/8" = 1'-0"

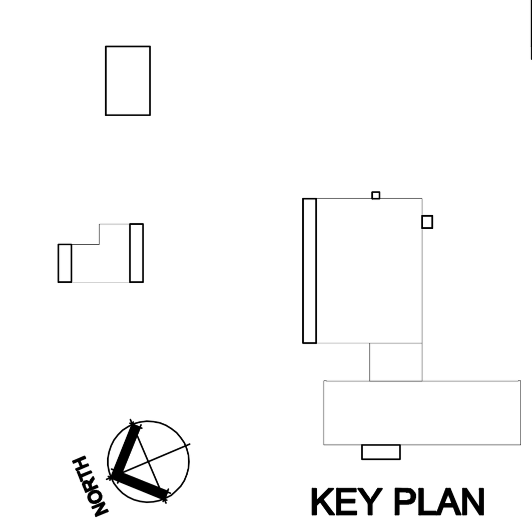

KEY PLAN

Texas Department of Transportation
125 E. 11th Street
Austin, Texas 78701-2483
(512) 416-3048

Copyright © 2005 Texas Department of Transportation

THIS DOCUMENT IS RELEASED FOR THE PURPOSE OF INFORMATION ONLY
NOT FOR REGULATORY APPROVAL, PERMITTING, OR CONSTRUCTION.

WACO AREA ENGINEER AND MAINTENANCE FACILITY
WACO, MCLENNAN COUNTY
WACO DISTRICT

Revisions

Drawn by: KCR
Project No. CBC4704-00672
Date 05.21.2007
Sheet No.

M2.3

of 8 M sheets

MECHANICAL PLAN - VEHICLE STORAGE BUILDING

NOTE: THIS DRAWING WAS CREATED FOR PRODUCTION ON 22" x 34" SHEET SIZE. DO NOT SCALE PRINTS.

HEAT PUMP SCHEDULE

INDOOR UNIT:	AHU-1	AHU-2	AHU-3	AHU-4	AHU-5	AHU-6	AHU-7	AHU-8
*ELECTRIC RESISTANCE HEATER MODEL No.	BAYHTR3415000	BAYHTR3410000	BAYHTR3410000	BAYHTR3415000	BAYHTR3415000	BAYHTR3415000	BAYHTR3415000	BAYHTR3415000
*AUX. HEAT INPUT, KW / CONTROL STAGES	11.53 / 1	7.20 / 1	7.20 / 1	11.53 / 1	11.53 / 1	11.53 / 1	11.53 / 1	11.53 / 1
*AUX. HEATING CAPACITY, BTUH	39,300	24,600	24,600	39,300	39,300	39,300	39,300	39,300
*UNIT VOLTS / PHASE / HZ	208 / 3 / 60	208 / 3 / 60	208 / 3 / 60	208 / 3 / 60	208 / 3 / 60	208 / 3 / 60	208 / 3 / 60	208 / 3 / 60
*CIRCUIT#1 MCA / MOCP	44 / 45	45 / 45	37 / 40	45 / 45	45 / 45	45 / 45	44 / 45	44 / 45
CIRCUIT#2 MCA / MOCP	N/A	N/A	N/A	N/A	N/A	N/A	N/A	N/A
FAN DRIVE TYPE / No. SPEEDS	DIRECT / 3	DIRECT / 3	DIRECT / 3	DIRECT / 4	DIRECT / 4	DIRECT / 4	DIRECT / 3	DIRECT / 3
DESIGN SUPPLY CFM (HORIZONTAL)	1600 @ 0.30" W.G.	1150 @ 0.30" W.G.	950 @ 0.37" W.G.	1800 @ 0.56" W.G.	1800 @ 0.56" W.G.	1800 @ 0.56" W.G.	1600 @ 0.30" W.G.	1600 @ 0.30" W.G.
DESIGN SUPPLY CFM (VERTICAL)	N/A	N/A	N/A	N/A	N/A	N/A	N/A	N/A
**DESIGN OUTSIDE AIR CFM (OA)	270	100	50	300	165	165	260	260
BLOWER FAN (HP)	1/2	1/3	1/3	1	1	1	1/2	1/2
NUMBER AND SIZE OF FILTERS (LOW VEL.)	(1) 20 x 20 x 1	(1) 20 x 20 x 1	(1) 20 x 20 x 1	(1) 20 x 22 x 1	(1) 20 x 22 x 1	(1) 20 x 22 x 1	(1) 20 x 20 x 1	(1) 20 x 20 x 1
MANUFACTURER	TRANE	TRANE	TRANE	TRANE	TRANE	TRANE	TRANE	TRANE
AIR HANDLER MODEL	2TEC3F48A1000AA	2TEC3F36A1000AA	2TEC3F30A1000AA	2TEC3F60A1000AA	2TEC3F60A1000AA	2TEC3F60A1000AA	2TEC3F48A1000AA	2TEC3F48A1000AA
No. REFRIGERANT CIRCUITS/ INDOOR UNIT	1	1	1	1	1	1	1	1
MOUNTING SUBBASE	N/A	N/A	N/A	N/A	N/A	N/A	N/A	N/A
OUTDOOR UNIT: (NOTE CAPACITIES LISTED/UNIT)	HP-1	HP-2	HP-3	HP-4	HP-5	HP-6	HP-8	HP-8
No. OUTDOOR UNITS / INDOOR UNIT	1	1	1	1	1	1	1	1
***RATED PERFORMANCE BASED ON	1600 @ 0.3" W.G.	1200 @ 0.21" W.G.	950 @ 0.37" W.G.	1865 @ 0.58" W.G.	1865 @ 0.58" W.G.	1865 @ 0.58" W.G.	1600 @ 0.3" W.G.	1600 @ 0.3" W.G.
***COOLING CAPACITY (TOTAL BTUH)	46,000	34,000	28,000	56,000	56,000	56,000	46,000	46,000
***COOLING CAPACITY (SENSIBLE BTUH)	33,200	24,800	20,400	40,000	40,000	40,000	33,200	33,200
***EER/SEER MATCHED AIR HANDLER	11.40 / 13.00	11.70 / 13.25	11.60 / 13.25	11.10 / 13.00	11.10 / 13.00	11.10 / 13.00	11.40 / 13.00	11.40 / 13.00
***HIGH TEMP. HTG. CAP. (BTUH)	42,500	32,200	26,000	53,000	53,000	53,000	42,500	42,500
***LOW TEMP. HTG. CAP. (BTUH)	N/A	N/A	N/A	N/A	N/A	N/A	N/A	N/A
***HIGH TEMPERATURE SYSTEM (COP)	3.50	3.50	3.50	3.50	3.50	3.50	3.50	3.50
***LOW TEMPERATURE SYSTEM (COP)	N/A	N/A	N/A	N/A	N/A	N/A	N/A	N/A
No. COMPRESSORS / OUTDOOR UNIT	1	1	1	1	1	1	1	1
COMPRESSOR TYPE	SCROLL	SCROLL	SCROLL	SCROLL	SCROLL	SCROLL	SCROLL	SCROLL
No. OUTDOOR FANS / OUTDOOR UNIT	1	1	1	1	1	1	1	1
REFRIGERANT	R-22	R-22	R-22	R-22	R-22	R-22	R-22	R-22
LOW AMBIENT (HEAD PRESSURE CONTROL)	0°F	0°F	0°F	0°F	0°F	0°F	0°F	0°F
*MIN CIRCUIT AMPACITY/MAX FUSE OR C.B.	16 / 25	11 / 15	9 / 15	23 / 40	23 / 40	23 / 40	16 / 25	16 / 25
*UNIT VOLTS / PHASE / HZ	208 /3 / 60	208 /3 / 60	208 /3 / 60	208 /3 / 60	208 /3 / 60	208 /3 / 60	208 /3 / 60	208 /3 / 60
MANUFACTURER	TRANE	TRANE	TRANE	TRANE	TRANE	TRANE	TRANE	TRANE
MODEL (OUTSIDE UNIT)	2TWA3048A3000AA	2TWA3036A3000AA	2TWA3030A3000AA	2TWA3060A3000AA	2TWA3060A3000AA	2TWA3060A3000AA	2TWA3048A3000AA	2TWA3048A3000AA

REMARKS:

* SINGLE POINT SERVICE CONNECTION

** PROVIDE GREENHECK GRSI-10 INTAKE CAP ON 17-1/2"x17-1/2" ROOF CURB WITH A DAMPER TRAY AND A BR-40 10"x10" BACKDRAFT DAMPER. REFER TO ARCHITECTURAL FOR ROOF CURD SPECIFICATIONS.

*** LISTED PERFORMANCE DATA IS BASED ON A.R.I STANDARD 210/240 CAPACITY RATING CONDITIONS.

1. CONTRACTOR SHALL PROVIDE THE FOLLOWING: ANTI-SHORT-CYCLE KIT, DEFROST CONTROL, HEAT PUMP COIL GUARDS AND RUBBER-IN-SHEAR ISOLATORS.
2. CONTRACTOR SHALL FOLLOW MANUFACTURER'S RECOMMENDATIONS FOR REFRIGERANT LINE LENGTHS AND SIZES.
3. THE UNITS LISTED AS "HEAT PUMPS" INCLUDE MATCHED INSIDE COIL MOUNTED TO THE AIR HANDLER, AS WELL AS THE EXPANSION VALVES, AND ALL OTHER APPURTENANCES NECESSARY FOR COMPLETE SYSTEMS.
4. MECHANICAL CONTRACTOR SHALL INSTALL HARD DRAWN TYPE "K" COPPER CONDENSATE DRAIN LINE TO DRAINS AS SHOWN ON PLANS.
5. THE INSTALLATION SHALL INCLUDE A PROGRAMMABLE AUTOCHANGEOVER PROGRAMMABLE 3 STAGE HEAT / 2 STAGE COOL THERMOSTAT JOHNSON CONTROLS #T500HPP-1. NOTE TO CONTRACTOR SECOND STAGE COOLING ON SCHEDULED THEROMSTAT WILL NOT BE USED ON THIS PROJECT.
6. CONTRACTOR SHALL PROVIDE AND INSTALL A SMOKE DETECTION SYSTEM WITH A SENSOR FOR EACH AIR HANDLER EXCEEDING 2000 CFM SUPPLY AIR. MOUNT DUCT MOUNTED SENSOR IN THE SUPPLY DUCT AND RETURN DUCT. INTERLOCK SMOKE DETECTION SHUT OFF DEVICE WITH THE AIR HANDLER FANS.
7. THE CONTRACTOR SHALL GUARANTEE ALL INSTALLED EQUIPMENT, MATERIAL, AND WORK INCLUDED IN THIS CONTRACT AGAINST ANY DEFECTS IN MATERIAL OR WORKMANSHIP; AND SHALL SATISFACTORILY CORRECT, AT NO COST TO THE STATE, ANY SUCH DEFECT THAT MAY BECOME APPARENT WITHIN A PERIOD OF ONE YEAR AFTER COMPLETION OF THE INSTALLATION. THE WARRANTY PERIOD SHALL COMMENCE ON THE DATE OF ACCEPTANCE OF THE CONTRACT BY THE STATE. A MANUFACTURER'S 4 YEAR EXTENDED COMPRESSOR WARRANTY (BEYOND THE INITIAL ONE YEAR PERIOD) SHALL BE INCLUDED WHEN OFFERED BY THE MANUFACTURER FOR ALL SIZES OF UNITARY AND SELF-CONTAINED DIRECT EXPANSION EQUIPMENT. INSURANCE POLICIES ARE NOT ACCEPTABLE.
8. ALL COMPONENTS OF EACH HVAC SYSTEM SHALL BE PRODUCTS OF THE SAME MANUFACTURER, AND SHALL BE PERFORMANCE MATCHED WITH PUBLISHED PERFORMANCE RATINGS. HVAC SYSTEMS WITH COMPONENTS FROM DIFFERENT MANUFACTURERS, EVEN SUBSIDIARIES OF THE SAME COMPANY, WILL NOT BE ACCEPTED.
9. ALL INDOOR UNITS SHALL HAVE FLEXIBLE CONNECTIONS ON THE SUPPLY AND RETURN DUCT WITH PLEATED FILTERS INSTALLED.

INFRA-RED RADIANT HEATER SCHEDULE

MARK	MBTU	MANUFACTURER, MODEL/SIZE	DESCRIPTION
HTR-1	100	RE-VERBER-RAY, DX 30-100	30FT LONG, INFRA-RED LIQUIFIED PETROLEUM GAS FIRED TUBE HEATER DX SERIES WITH A 100,000 BTUH. INPUT RATING. THE EMITTER & COMBUSTION CHAMBER ARE ALUMINIZED STEEL 16 GAGE 4" O.D. CONSTRUCTION AND COATED WITH A HIGH TEMPERATURE CORROSION RESISTANT COATING. THE POWER SUPPLY IS 120V, 3-WIRE SYSTEM. THE BURNER SHALL BE CONTROLLED WITH A 100% SAFETY SHUT-OFF SYSTEM WITH DUAL DIFFERENTIAL PRESSURE SWITCHES AND A SILICON CARBIDE HOT SURFACE IGNITOR.
HTR-2	50	RE-VERBER-RAY, DX 20-50	20FT LONG, INFRA-RED LIQUIFIED PETROLEUM GAS FIRED TUBE HEATER DX SERIES WITH A 50,000 BTUH. INPUT RATING. THE EMITTER & COMBUSTION CHAMBER ARE ALUMINIZED STEEL 16 GAGE 4" O.D. CONSTRUCTION AND COATED WITH A HIGH TEMPERATURE CORROSION RESISTANT COATING. THE POWER SUPPLY IS 120V, 3-WIRE SYSTEM. THE BURNER SHALL BE CONTROLLED WITH A 100% SAFETY SHUT-OFF SYSTEM WITH DUAL DIFFERENTIAL PRESSURE SWITCHES AND A SILICON CARBIDE HOT SURFACE IGNITOR.
HTR-3, 4 & 5	75	RE-VERBER-RAY, DX 20-75	20FT LONG, INFRA-RED LIQUIFIED PETROLEUM GAS FIRED TUBE HEATER DX SERIES WITH A 75,000 BTUH. INPUT RATING. THE EMITTER & COMBUSTION CHAMBER ARE ALUMINIZED STEEL 16 GAGE 4" O.D. CONSTRUCTION AND COATED WITH A HIGH TEMPERATURE CORROSION RESISTANT COATING. THE POWER SUPPLY IS 120V, 3-WIRE SYSTEM. THE BURNER SHALL BE CONTROLLED WITH A 100% SAFETY SHUT-OFF SYSTEM WITH DUAL DIFFERENTIAL PRESSURE SWITCHES AND A SILICON CARBIDE HOT SURFACE IGNITOR.
T-L	---	COLUMBUS, S2022-11	120V SINGLE STAGE ELECTRIC THERMOSTAT WITH A CONTROL TEMPERATURE RANGE FROM 40° TO 80° F. HOUSED IN A WHITE PLASTIC COVER WITH DIAL ADJUSTMENT. THERMOSTAT SHALL BE CAPABLE OF CONTROLLING UP TO 4 INFRARED TUBE HEATERS.

NOTE: SUPPLY AND INSTALL AN 8" DIRT LEG AND A POINT OF USE GAS COCK WITH A SIDE PRESSURE TAP FOR EACH HEATER. REFER TO INFRARED HEATER DETAILS.

WALL MOUNTED SPLIT SYSTEM

INDOOR UNIT:	AC-1	AC-2
*UNIT VOLTS / PHASE / HZ	OUTDOOR UNIT	OUTDOOR UNIT
*MCA / MOCP	N/A	N/A
FAN DRIVE TYPE / No. SPEEDS	AUTO / 3	AUTO / 3
BLOWER FAN (HP)	0.024	0.024
NUMBER AND SIZE OF FILTERS (LOW VEL.)	FURNISHED	FURNISHED
MANUFACTURER	TRANE	TRANE
AIR HANDLER MODEL	MCW512AMUAO	MCW512AMUAO
No. REFRIGERANT CIRCUITS/ INDOOR UNIT	1	1
ELECTRIC RESISTANCE HEATER MODEL No.	N/A	N/A
OUTDOOR UNIT: (NOTE CAPACITIES LISTED/UNIT)	CU-1	CU-2
No. OUTDOOR UNITS / INDOOR UNIT	1	1
**RATED PERFORMANCE BASED ON	311 CFM	311 CFM
**COOLING CAPACITY (TOTAL BTUH)	13,250	13,250
**COOLING CAPACITY (SENSIBLE BTUH)	8,215	8,215
**EER/SEER MATCHED AIR HANDLER	9.60 / 11.2	9.60 / 11.2
No. COMPRESSORS / OUTDOOR UNIT	1	1
COMPRESSOR TYPE	SCROLL	SCROLL
No. OUTDOOR FANS / OUTDOOR UNIT	1	1
REFRIGERANT	R-22	R-22
LOW AMBIENT (HEAD PRESSURE CONTROL)	30°F	30°F
*MIN CIRCUIT AMPACITY/MAX FUSE OR C.B.	11 / 15	11 / 15
*UNIT VOLTS / PHASE / HZ	208 / 1 / 60	208 / 1 / 60
MANUFACTURER	TRANE	TRANE
MODEL (OUTSIDE UNIT)	TTB012C100A	TTB012C100A

REMARKS:

* SINGLE POINT SERVICE CONNECTION

** LISTED PERFORMANCE DATA IS BASED ON A.R.I STANDARD 210/240 CAPACITY RATING CONDITIONS.

1. CONTRACTOR SHALL FOLLOW MANUFACTURER'S RECOMMENDATIONS FOR REFRIGERANT LINE LENGTHS AND SIZES.
2. THE ABOVE SCHEDULED DUCTLESS SPLIT SYSTEM HAS AN OUTDOOR CONDENSING UNIT AND A WALL MOUNTED AIR HANDLER UNIT WITH REMOTE CONTROL FEATURES. WALL MOUNTED THERMOSTATS ARE ACCEPTABLE.
3. UNIT SHALL INCLUDE A PERMANENT WASHABLE FILTER.
4. MECHANICAL CONTRACTOR SHALL INSTALL HARD DRAWN TYPE "K" COPPER CONDENSATE DRAIN LINE TO DRAINS AS SHOWN ON PLANS.
5. THE CONTRACTOR SHALL GUARANTEE ALL INSTALLED EQUIPMENT, MATERIAL, AND WORK INCLUDED IN THIS CONTRACT AGAINST ANY DEFECTS IN MATERIAL OR WORKMANSHIP; AND SHALL SATISFACTORILY CORRECT, AT NO COST TO THE STATE, ANY SUCH DEFECT THAT MAY BECOME APPARENT WITHIN A PERIOD OF ONE YEAR AFTER COMPLETION OF THE INSTALLATION. THE WARRANTY PERIOD SHALL COMMENCE ON THE DATE OF ACCEPTANCE OF THE CONTRACT BY THE STATE. A MANUFACTURER'S 4 YEAR EXTENDED COMPRESSOR WARRANTY (BEYOND THE INITIAL ONE YEAR PERIOD) SHALL BE INCLUDED WHEN OFFERED BY THE MANUFACTURER FOR ALL SIZES OF UNITARY AND SELF-CONTAINED DIRECT EXPANSION EQUIPMENT. INSURANCE POLICIES ARE NOT ACCEPTABLE.
6. ALL COMPONENTS OF EACH HVAC SYSTEM SHALL BE PRODUCTS OF THE SAME MANUFACTURER, AND SHALL BE PERFORMANCE MATCHED WITH PUBLISHED PERFORMANCE RATINGS. HVAC SYSTEMS WITH COMPONENTS FROM DIFFERENT MANUFACTURERS, EVEN SUBSIDIARIES OF THE SAME COMPANY, WILL NOT BE ACCEPTED.

Texas Department of Transportation
125 E. 11th Street
Austin, Texas 78701-2483
(512) 416-3046
Copyright © 2006 Texas Department of Transportation

THIS DOCUMENT IS RELEASED FOR THE PURPOSE OF
INFORMATION ONLY
NOT FOR REGULATORY
APPROVAL, PERMITTING,
OR CONSTRUCTION.

WACO AREA ENGINEER
AND MAINTENANCE FACILITY
WACO, MCLENNAN COUNTY
WACO DISTRICT

Revisions

Drawn by: KCR
Project No. CBC4704-00672
Date 05.21.2007
Sheet No.
M4.1
of 8 M sheets

MECHANICAL SCHEDULES - 1

NOTE: THIS DRAWING WAS CREATED FOR PRODUCTION ON 22" x 34" SHEET SIZE. DO NOT SCALE PRINTS.

CADFILE: ... Plotted: Fri, Aug. 07, 2009 @ 1:36 PM By: MBAZAN

EXHAUST FAN SCHEDULE

UNIT	MODEL#	MANUFACTURER NAME	EXHAUST FAN DESCRIPTION	DESIGN EXHAUST (CFM)	EXHAUST CFM/@ IN. W.G. ΔP	MOTOR RPM	INPUT HP (AMPS)	SONES	VOLTS/ PHASE/HZ	DRIVE	INSTALLATION DESCRIPTION	ROOF CURB (WALLFLANGE) SIZE	ROOF CURB HEIGHT IN.	DUCT/DAMPER INLET SIZE WXH (IN.)	COMMENTS
EF-1	CSP-A290	GREENHECK	IN-LINE	260	265/0.25	1050	(0.71)	2.6	120/1/60	DIRECT	SUSPEND	15	6	12-7/8 x 10	GREENHECK RCC-7 EXHAUST CAP INSTALLED ON ROOF CURB
EF-2	CUE-161-C	GREENHECK	UPBLAST	2,105	2,126/0.25	860	1/4	9.9	120/1/60	DIRECT	ROOF CURB	22	12	18-1/2 x 18-1/2	
EF-3	CUE-161-C	GREENHECK	UPBLAST	2,105	2,126/0.25	860	1/4	9.9	120/1/60	DIRECT	ROOF CURB	22	12	18-1/2 x 18-1/2	
EF-4	CUE-161-C	GREENHECK	UPBLAST	2,105	2,126/0.25	860	1/4	9.9	120/1/60	DIRECT	ROOF CURB	22	12	18-1/2 x 18-1/2	
EF-5	CUE-161-C	GREENHECK	UPBLAST	2,105	2,126/0.25	860	1/4	9.9	120/1/60	DIRECT	ROOF CURB	22	12	18-1/2 x 18-1/2	
EF-6	CW-161-C	GREENHECK	SIDEWALL	2,105	2,126/0.25	860	1/4	9.9	120/1/60	DIRECT	SIDEWALL	(22-1/8)	N/A	18-1/2 x 18-1/2	
EF-7	CW-161-C	GREENHECK	SIDEWALL	2,105	2,126/0.25	860	1/4	9.9	120/1/60	DIRECT	SIDEWALL	(22-1/8)	N/A	18-1/2 x 18-1/2	
EF-8	CUE-121-B	GREENHECK	UPBLAST	900	1,180/0.25	1140	1/6	8.2	120/1/60	DIRECT	ROOF CURB	19	12	14-1/2 x 14-1/2	
EF-9	CUE-60-E	GREENHECK	UPBLAST	80	81/0.125	1050	1/200	1.17	120/1/60	DIRECT	ROOF CURB	17	12	10-1/2 x 10-1/2	
EF-10	CSP-A510	GREENHECK	IN-LINE	415	464/0.25	1,070	(1.8)	2.8	120/1/60	DIRECT	SUSPEND	20-1/2	6	16-7/8 x 13-1/4	GREENHECK GRS-10 EXHAUST CAP INSTALLED ON ROOF CURB
EF-11	SFD-9-4C	GREENHECK	BLOWER	750	710/0.3	860	1/4	6.7	120/1/60	DIRECT	FLOOR MOUNT	N/A	N/A	10-1/8 x 6-1/4	ARRANGEMENT 4, CW ROTATION, DISCHARGE TH, GREENKOTE COATING
EF-12	CSP-A110	GREENHECK	IN-LINE	100	102/0.250	950	(0.62)	1.3	120/1/60	DIRECT	SUSPEND	15	6	12 X 9 1/4	GREENHECK RCC-7 EXHAUST CAP INSTALLED ON ROOF CURB
EF-W	EX-100	CAR-MON	WELDING	600	600/3.00	N/A	3/4	N/A	120/1/60	DIRECT	BEAM MOUNT	N/A	N/A	N/A	
EF-V	DUAL CO-X	CAR-MON	VEHICLE	600	600/3.00	N/A	3/4	N/A	120/1/60	DIRECT	BEAM MOUNT	N/A	N/A	N/A	
EF-WB	SE1-8-428-P	GREENHECK	PROPELLER	250	237/0.125	1650	1/40	N/A	120/1/60	DIRECT	SIDEWALL	N/A	N/A	12 X 12	SEE SHEET P2.3 FOR LOCATION.

REMARKS:

1. EF-1 & 10 INTERLOCK EXHAUST FAN WITH LIGHT SWITCHES. (SEE ELECTRICAL).
2. EF-6 & 7, INTERLOCK EXHAUST FAN WITH PROPANE LEAK DETECTION CONSOLE. (SEE ELECTRICAL). PROVIDE ALUMINUM RUB RING, AND BAKED PHENOLIC COATING ON ALL SURFACES EXPOSED TO AIRFLOW. MOTOR SHALL BE EXPLOSION PROOF AND MOUNTED OUT OF THE AIR STREAM.
3. EF-W, WELDING EXHAUST ASSEMBLY WITH CMW-9 FAN, 10 FEET TYPE PT WELDPROOF TUBING, SERIES EX-WB WALL PLATFORM AND "M" FUME RECEPTOR FITTING. CONTRACTOR SHALL INSTALL UNIT PER MANUFACTURER'S RECOMMENDATIONS. DUCT EXHAUST TO SCHEDULED LOUVER.
4. EF-V, VEHICLE EXHAUST PACKAGE, WITH SPRING ASSIST BALANCERS AND SLINGS, TWO 5" TYPE CLX HIGH TEMPERATURE TUBING, 30 FEET EACH, EPDM EXHAUST PIPE ADAPTERS CAR-MON SERIES CWM-9 FAN. ASSEMBLY SHALL BE SUITABLE FOR SIDE WALL MOUNTING AND SHALL BE MOUNTED PER MANUFACTURERS RECOMMENDATIONS. DUCT EXHAUST TO SCHEDULED LOUVER.
5. ALL ROOF JACKS SHALL BE INSTALLED BY ROOFER PER ARCHITECTURAL PLANS AND SPECIFICATIONS. SEE KEYED NOTES IN PLANS FOR EACH ROOF JACK LOCATION. SUSPEND EACH INLINE CABINET FAN WITH HANGING VIBRATION ISOLATORS.
6. PROVIDE AND INSTALL A BACKDRAFT DAMPER AND BIRDSREEN PROVIDED BY FAN MANUFACTURER ON ALL FANS.
7. CONTRACTOR SHALL INSTALL AND PROVIDE ROOF CURBS WITH A DAMPER SHELF FOR ALL ROOF MOUNTED EXHAUST FANS. CONTRACTOR IS RESPONSIBLE FOR MATCHING ROOF PROFILE AND PITCH ON ALL ROOF CURBS.
8. NOTE ALL EXHAUST FANS SHALL BE RUNNING WHILE PERFORMING TESTING AND AIR BALANCING MEASUREMENTS.
9. PROVIDE AND INSTALL GRAINGER #2E340 WALL MOUNTED FAN THERMOSTAT TO CONTROL BOTH EF-WB AND LOUVER L-WB2. SEE SHEET P2.3 FOR LOCATION.

DIFFUSER / GRILLE SCHEDULE

MARK	MANUFACTURER, MODEL/SIZE	DESCRIPTION
S12	MANUFACTURED BY TITUS TMS-AA-12-24X24-3-26-EG-IB-D75	FULL FACE T-BAR LAY-IN STYLE SQUARE CEILING DIFFUSER. ALL ALUMINUM CONSTRUCTION WITH FACTORY WHITE FINISH, WITH REMOVABLE 3-CONE INNER ASSEMBLIES; REMOVABLE BUTTON PLUG FOR ACCESS TO DAMPER OPERATOR AFTER INSTALLATION. INTEGRAL OPPOSED BLADE DAMPER COMPLETE WITH ROUND EQUALIZING GRID AND FACTORY INSTALLED ½" THICK FOIL BACKED INSULATION.
S10	MANUFACTURED BY TITUS TMS-AA-10-24X24-3-26-EG-IB-D75	
S8	MANUFACTURED BY TITUS TMS-AA-8-24X24-3-26-EG-IB-D75	
S6	MANUFACTURED BY TITUS TMS-AA-6-24X24-3-26-EG-IB-D75	
SG10	MANUFACTURED BY TITUS TMS-AA-10-24X24-1-26-EG-IB-D75	SURFACE MOUNT STYLE SQUARE CEILING DIFFUSER. ALL ALUMINUM CONSTRUCTION WITH FACTORY WHITE FINISH, WITH REMOVABLE 3-CONE INNER ASSEMBLIES; REMOVABLE BUTTON PLUG FOR ACCESS TO DAMPER OPERATOR AFTER INSTALLATION. INTEGRAL OPPOSED BLADE DAMPER COMPLETE WITH ROUND EQUALIZING GRID AND FACTORY INSTALLED ½" THICK FOIL BACKED INSULATION.
SG8	MANUFACTURED BY TITUS TMS-AA-8-24X24-1-26-EG-IB-D75	
SG6	MANUFACTURED BY TITUS TMS-AA-6-12X12-1-26-EG-IB-D75	
RD	MANUFACTURED BY TITUS 50F-24X24-3-26-A	T-BAR LAY-IN STYLE 24" x 24" SQUARE 1/2" x 1/2" x 1/2" EGGCRATE CORE CEILING RETURN GRILLE. ALL ALUMINUM CONSTRUCTION WITH FACTORY WHITE FINISH.
RDG	MANUFACTURED BY TITUS 50F-24X24-1-26-A	SURFACE MOUNT STYLE 24" x 24" SQUARE 1/2" x 1/2" x 1/2" EGGCRATE CORE CEILING RETURN GRILLE. ALL ALUMINUM CONSTRUCTION WITH FACTORY WHITE FINISH.
E	MANUFACTURED BY TITUS 50F-F-24X24-3-26-A	T-BAR LAY-IN STYLE 24" x 24" SQUARE 1/2" x 1/2" x 1/2" EGGCRATE CORE CEILING EXHAUST GRILLE WITH FILTER FRAME. INSTALL A PLEATED FILTER. ALL ALUMINUM CONSTRUCTION WITH FACTORY WHITE FINISH. TRANSISTION DUCT TO FIT GRILLE.
EG	MANUFACTURED BY TITUS 50F-F-24X24-1-26-A	SURFACE MOUNT STYLE 24" x 24" SQUARE 1/2" x 1/2" x 1/2" EGGCRATE CORE CEILING EXHAUST GRILLE WITH FILTER FRAME. ALL ALUMINUM CONSTRUCTION WITH FACTORY WHITE FINISH. TRANSISTION DUCT TO FIT GRILLE.

NOTE: DO NOT USE INTEGRAL OPPOSED BLADE DAMPERS IN GRILLES FOR BALANCING. UNLESS NOTED OTHERWISE. SUPPORT ALL T-BAR LAY IN GRILLES AT ALL FOUR CORNERS. SUPPORT ALL FLUSH MOUNT SIDEWALL REGISTERS, GRILLES AND ACCESS DOORS ON ALL FOUR SIDES BY PROVIDING BLOCKING IN FRAMING.

GRAVITY INTAKE/RELIEF VENTILATORS AND LOUVER SCHEDULE

MARK	MANUFACTURER, MODEL/SIZE	DESCRIPTION
GIV-1	MANUFACTURED BY GREENHECK FHI & WD-410 FAN CURB: 32 in. W x 32 in. H FAN THROAT: 24 in. W x 24 in. H INTAKE DAMPER: 24 in. W x 24 in. H	GRAVITY INTAKE FABRA HOOD AND HORIZONTAL MOUNT FLANGLESS SPRING CLOSED INTAKE BACKDRAFT DAMPER. HOOD SHALL BE LOW PROFILE WITH AN ARCHED HOOD PANEL HEAVY GAGE GALVANIZED STEEL WITH FACTORY APPLIED BAKED ENAMEL FINISH, COLOR SELECTED BY ARCHITECT, APPROX. FREE AREA 4.0 SQFT. PRESSURE DROP ACROSS HOOD SHALL BE LESS THAN 0.149 IN. W.G. ΔP. INSTALL WITH HEAVY GAGE ALUMINUM BIRDSCREEN AND STAINLESS STEEL INSECT SCREEN. ALUMINUM DAMPER BLADES SHALL START TO OPEN AT 0.014 IN. W.G. ΔP AND FULLY OPENED AT 0.12 IN. W.G. ΔP. DUCT INTAKE AIR PARALLEL WITH ROOF DECK DROP DOWN AT WALL TO FLOOR 24" x 24", 18 GAUGE SHEETMETAL LEAVE BOTTOM OF DUCT OPEN 24" A.F.F.
LD-1	MANUFACTURED BY GREENHECK ESJ-401 & EM-30 SIZE: 18 in. W x 18 in. H	FLANGELESS EXTRUDED ALUMINUM STATIONARY LOUVER AND VERTICAL MOUNT FLANGLESS EXHAUST BACKDRAFT DAMPER IN BUILDING EXTERIOR WALL. LOUVER SHALL BE HEAVY GAGE EXTRUDED WITH FACTORY APPLIED FINISH, COLOR SELECTED BY ARCHITECT, APPROX. FREE AREA 0.89 SQFT. INSTALL WITH EXPANDED ALUMINUM BIRDSCREEN AND STAINLESS STEEL INSECT SCREEN. COUNTERBALANCED DUCTED DAMPER BLADES SHALL START TO OPEN AT 0.01 IN. W.G. ΔP AND FULLY OPENED AT 0.055 IN. W.G. ΔP.
LD-2	MANUFACTURED BY GREENHECK ESJ-401 & EM-30 SIZE: 24 in. W x 24 in. H	FLANGELESS EXTRUDED ALUMINUM STATIONARY LOUVER AND VERTICAL MOUNT FLANGLESS EXHAUST BACKDRAFT DAMPER IN BUILDING EXTERIOR WALL. LOUVER SHALL BE HEAVY GAGE EXTRUDED WITH FACTORY APPLIED FINISH, COLOR SELECTED BY ARCHITECT, APPROX. FREE AREA 1.72 SQFT. INSTALL WITH EXPANDED ALUMINUM BIRDSCREEN AND STAINLESS STEEL INSECT SCREEN. COUNTERBALANCED DUCTED DAMPER BLADES SHALL START TO OPEN AT 0.01 IN. W.G. ΔP AND BE FULLY OPENED AT 0.055 IN. W.G. ΔP.
LD-3	MANUFACTURED BY GREENHECK ESJ-401 & BR-32 SIZE: 12 in. W x 12 in. H	FLANGED EXTRUDED ALUMINUM STATIONARY LOUVER AND VERTICAL MOUNT FLANGLESS EXHAUST BACKDRAFT DAMPER IN BUILDING EXTERIOR WALL. LOUVER SHALL BE HEAVY GAGE EXTRUDED WITH FACTORY APPLIED FINISH, COLOR SELECTED BY ARCHITECT, APPROX. FREE AREA 0.29 SQFT. INSTALL WITH EXPANDED ALUMINUM BIRDSCREEN AND STAINLESS STEEL INSECT SCREEN. COUNTERBALANCED DUCTED DAMPER BLADES SHALL START TO OPEN AT 0.05 IN. WG @ 150 FPM. MOUNT @ 7 FT. A.F.F.
L-1	MANUFACTURED BY GREENHECK ESJ-401 SIZE: 36 in. W x 48 in. H	FLANGELESS EXTRUDED ALUMINUM STATIONARY LOUVER AND VERTICAL MOUNT FLANGE ON EXTERIOR WALL. LOUVER SHALL BE HEAVY GAGE EXTRUDED WITH FACTORY APPLIED FINISH, COLOR SELECTED BY ARCHITECT, APPROX. FREE AREA 6. SQFT. INSTALL WITH EXPANDED ALUMINUM BIRDSCREEN AND STAINLESS STELL INSECT SCREEN.
L-WB1	MANUFACTURED BY GREENHECK ESD-202 SIZE: 12 in. W x 12 in. H	FLANGELESS EXTRUDED ALUMINUM STATIONARY LOUVER AND VERTICAL MOUNT FLANGE ON EXTERIOR WALL. LOUVER SHALL BE HEAVY GAGE EXTRUDED WITH FACTORY APPLIED FINISH, COLOR SELECTED BY ARCHITECT, APPROX. FREE AREA 0.23 SQFT. INSTALL WITH EXPANDED ALUMINUM BIRDSCREEN. SEE SHEET P2.3 FOR LOCATION.
L-WB2	MANUFACTURED BY GREENHECK ESD-202 SIZE: 18 in. W x 18 in. H	FLANGELESS EXTRUDED ALUMINUM STATIONARY LOUVER AND VERTICAL MOUNT FLANGE ON EXTERIOR WALL. LOUVER SHALL BE HEAVY GAGE EXTRUDED WITH FACTORY APPLIED FINISH, COLOR SELECTED BY ARCHITECT, APPROX. FREE AREA 0.67 SQFT. INSTALL WITH EXPANDED ALUMINUM BIRDSCREEN. PROVIDE AND INSTALL GRAINGER #4C560, MOTORIZED DAMPER, MOUNTED ON FIELD FABRICATED MOUNTING PLATE ON INSIDE OF DAMPER. SEE SHEET P2.3 FOR LOCATION.

Texas Department of Transportation
125 E. 11th Street
Austin, Texas 78701-2483
(512) 416-3000
Copyright © 2005 Texas Department of Transportation

THIS DOCUMENT IS RELEASED FOR THE PURPOSE OF
INFORMATION ONLY
NOT FOR REGULATORY
APPROVAL, PERMITTING,
OR CONSTRUCTION.

WACO AREA ENGINEER
AND MAINTENANCE FACILITY
WACO, MCLENNAN COUNTY
WACO DISTRICT

Revisions

Drawn by:
KCR
Project No.
CBC4704-00672
Date
05.21.2007
Sheet No.

M4.2
of 8 M sheets

NOTE: THIS DRAWING WAS CREATED FOR PRODUCTION ON 22" x 34" SHEET SIZE. DO NOT SCALE PRINTS.

CADFILE: T:\MNTF\MD25FTWO\SHC\0704-00-857\02-77-07\M00857\Acad\proto\plot pdf\hvac\Acad\MEP\MECH\M4_1_TO_M4_2.dwg Plotted: Fri, Aug. 07, 2009 @ 1:27 PM By: MBAZAN

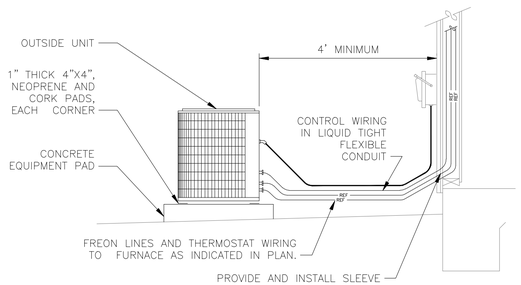

1 HEAT PUMP/CONDENSING UNIT REFRIGERANT LINES ABOVE GROUND
SCALE: NOT TO SCALE

2 DETAIL NOT USED
SCALE: NOT TO SCALE

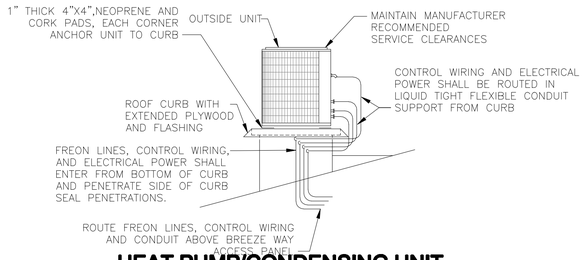

3 HEAT PUMP/CONDENSING UNIT INSTALLED ON ROOF CURB
SCALE: NOT TO SCALE

4 DETAIL NOT USED
SCALE: NOT TO SCALE

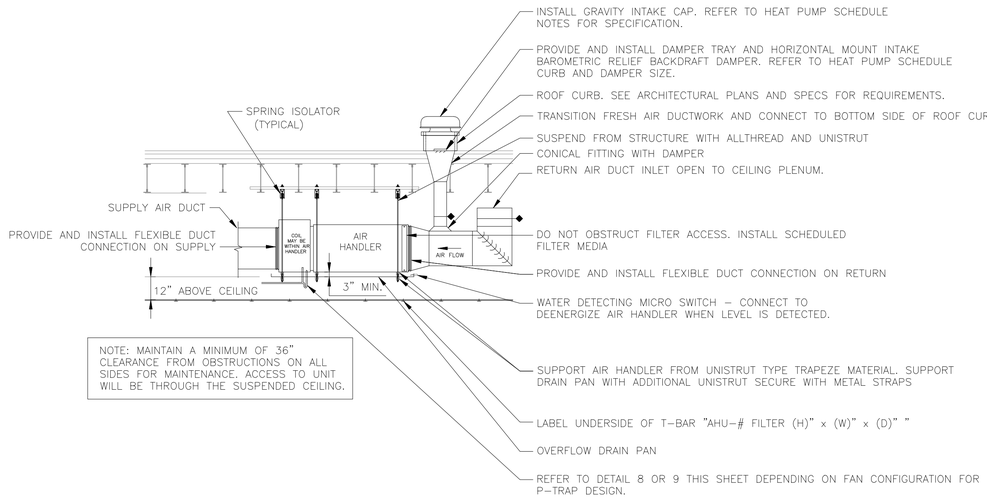

5 HORIZONTAL AIR HANDLER SUSPENDED ABOVE CEILING FREE RETURN SYSTEM
SCALE: NOT TO SCALE

6 DETAIL NOT USED
SCALE: NOT TO SCALE

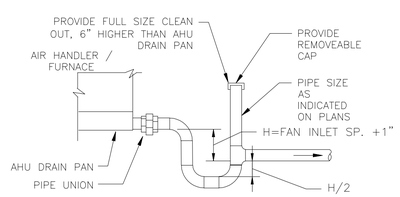

NOTE: PIPING SHOWN WITHOUT INSULATION FOR CLARITY. INSTALL INSULATION AS SPECIFIED.

8 CONDENSATE P-TRAP (DRAW-THRU AIR HANDLER)
SCALE: NOT TO SCALE

7 DETAIL NOT USED
SCALE: NOT TO SCALE

9 DETAIL NOT USED
SCALE: NOT TO SCALE

10 DETAIL NOT USED
SCALE: NOT TO SCALE

MECHANICAL DETAILS - 1

NOTE: THIS DRAWING WAS CREATED FOR PRODUCTION ON 22" x 34" SHEET SIZE. DO NOT SCALE PRINTS.

Texas Department of Transportation
125 E. 11th Street
Austin, Texas 78701-2483
(512) 416-3000

Copyright © 2005 Texas Department of Transportation

THIS DOCUMENT IS RELEASED FOR THE PURPOSE OF
INFORMATION ONLY
NOT FOR REGULATORY
APPROVAL, PERMITTING,
OR CONSTRUCTION.

WACO AREA ENGINEER
AND MAINTENANCE FACILITY
WACO, MCLENNAN COUNTY
WACO DISTRICT

Revisions

Drawn by: KCR
Project No. CBC4704-00672
Date 05.21.2007
Sheet No.

M5.1
of 8 M sheets

CADFILE: T:\AUTRAD\DGN\TWC\CBC4704-00-00\103-77-4704006703\Accdfpvnt\dgn\pdf pafiltwaco\Accd\MEP\MECH\M5_1.dwg Plotted: Fri, Aug. 07, 2009 @ 1:37 PM By: MBAZAN

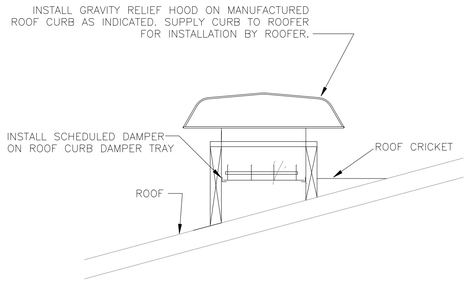

1 ROOF MOUNTED GRAVITY RELIEF HOOD
SCALE: NOT TO SCALE

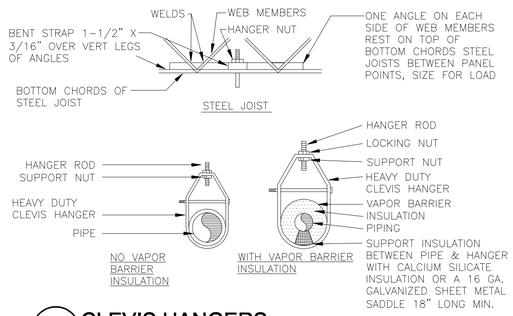

2 CLEVIS HANGERS
SCALE: NOT TO SCALE

3 DETAIL NOT USED
SCALE: NOT TO SCALE

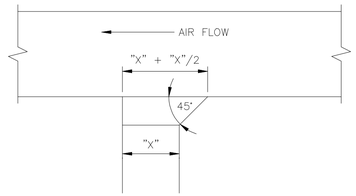

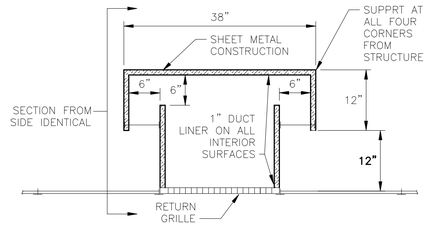

RETURN GRILLE SOUND BOX (SECTION CUT)
SCALE: NOT TO SCALE

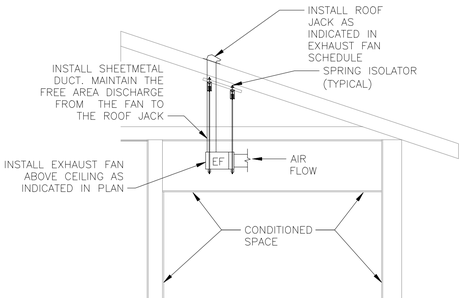

7 INLINE CABINET EXHAUST FAN
SCALE: NOT TO SCALE

4 DETAIL NOT USED
SCALE: NOT TO SCALE

5 RECTANGULAR DUCT BOOT TAP
SCALE: NOT TO SCALE

6 DETAIL NOT USED
SCALE: NOT TO SCALE

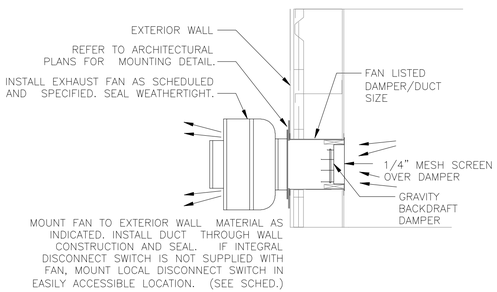

8 SIDEWALL EXHAUST FAN
SCALE: NOT TO SCALE

9 DETAIL NOT USED
SCALE: NOT TO SCALE

10 DETAIL NOT USED
SCALE: NOT TO SCALE

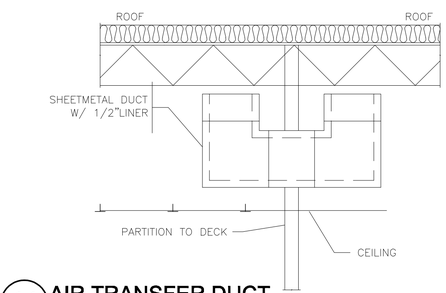

11 AIR TRANSFER DUCT
SCALE: NOT TO SCALE

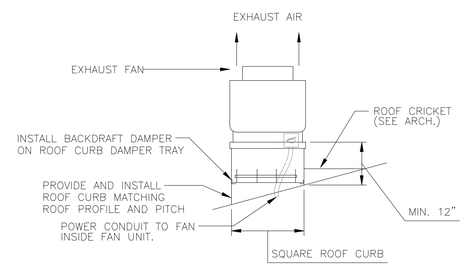

12 ROOF MOUNTED UPBLAST EXHAUST FAN
SCALE: NOT TO SCALE

13 DETAIL NOT USED
SCALE: NOT TO SCALE

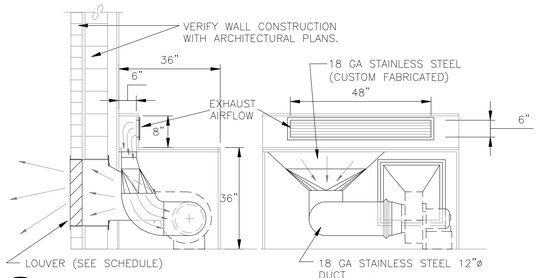

14 COUNTER TOP EXHAUST FAN
SCALE: NOT TO SCALE

15 DETAIL NOT USED
SCALE: NOT TO SCALE

MECHANICAL DETAILS - 2

NOTE: THIS DRAWING WAS CREATED FOR PRODUCTION ON 22" x 34" SHEET SIZE. DO NOT SCALE PRINTS.

Texas Department of Transportation
125 E. 11th Street
Austin, Texas 78701-2483
(512) 416-3000

Copyright © 2005 Texas Department of Transportation

THIS DOCUMENT IS RELEASED FOR THE PURPOSE OF
INFORMATION ONLY
NOT FOR REGULATORY
APPROVAL, PERMITTING,
OR CONSTRUCTION.

WACO AREA ENGINEER AND MAINTENANCE FACILITY
WACO, MCLENNAN COUNTY
WACO DISTRICT

Revisions

Drawn by: KCR
Project No. CBC4704-00672
Date 05.21.2007
Sheet No.

M5.2
of 8 M sheets

CADFILE: T:\MNTFM\DGN\TWC\CBC4704-00-05\102-77-4704005STA\cad\pwd\dgn\pal pal\texas\Acad\MEP\MECH\M5_2.dwg Plotted: Fri, Aug. 07, 2009 @ 1:35 PM By: MBAZAN

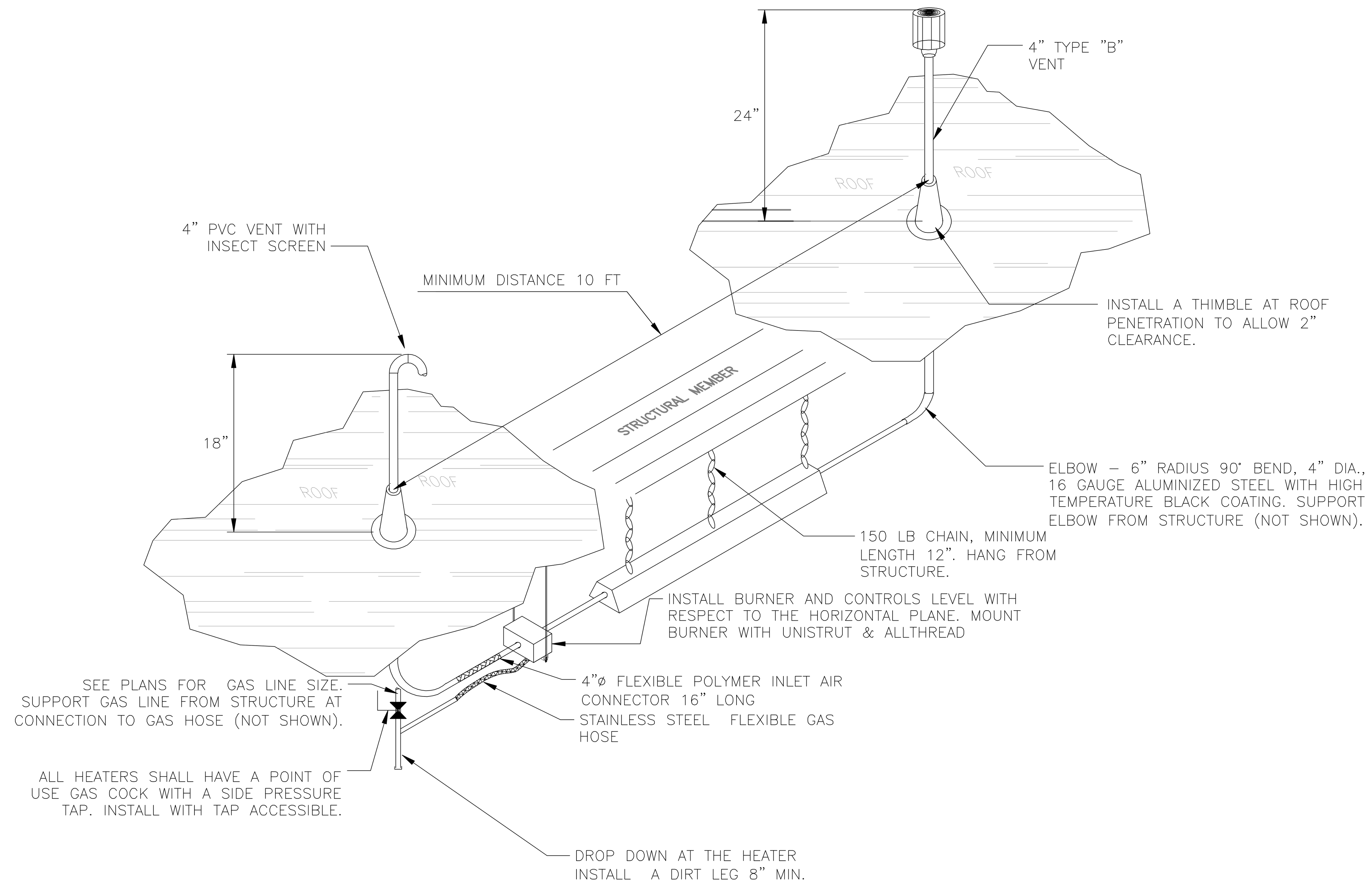

1 INFRARED TUBE HEATER
SINGLE VENTING
SCALE: NOT TO SCALE

2 DETAIL NOT USED
SCALE: NOT TO SCALE

3 DETAIL NOT USED
SCALE: NOT TO SCALE

4 DETAIL NOT USED
SCALE: NOT TO SCALE

5 DETAIL NOT USED
SCALE: NOT TO SCALE

6 DETAIL NOT USED
SCALE: NOT TO SCALE

MECHANICAL DETAILS - 3

NOTE: THIS DRAWING WAS CREATED FOR PRODUCTION ON 22" x 34" SHEET SIZE. DO NOT SCALE PRINTS.

Texas Department of Transportation
125 E. 11th Street
Austin, Texas 78701-2483
(512) 416-2040

Copyright © 2005 Texas Department of Transportation

THIS DOCUMENT IS RELEASED FOR THE PURPOSE OF INFORMATION ONLY
NOT FOR REGULATORY APPROVAL, PERMITTING, OR CONSTRUCTION.

WACO AREA ENGINEER AND MAINTENANCE FACILITY
WACO, MCLENNAN COUNTY
WACO DISTRICT

Revisions

Drawn by: KCR
Project No. CBC4704-00672
Date 05.21.2007
Sheet No. M5.3
of 8 M sheets

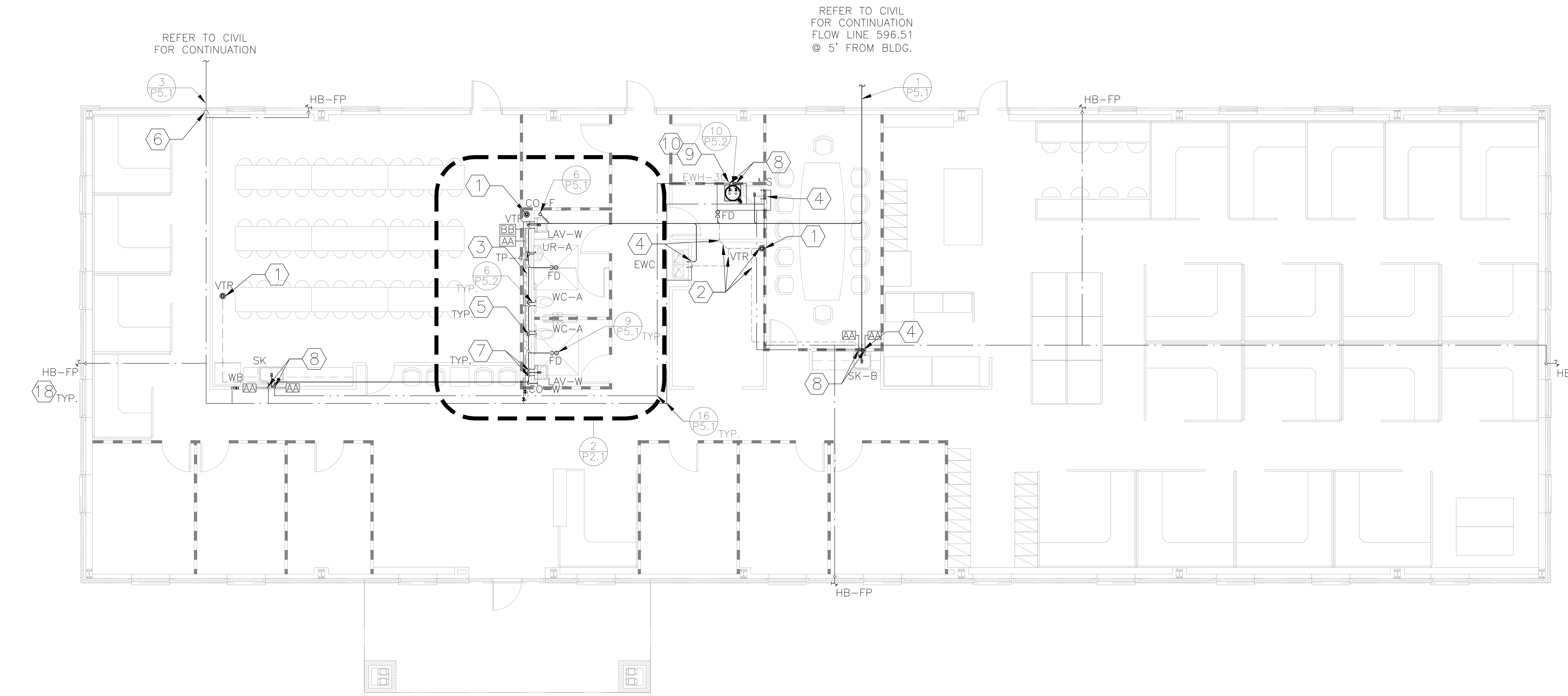

1 PLUMBING FLOOR PLAN - OFFICE BUILDING
SCALE: 1/8" = 1'-0"

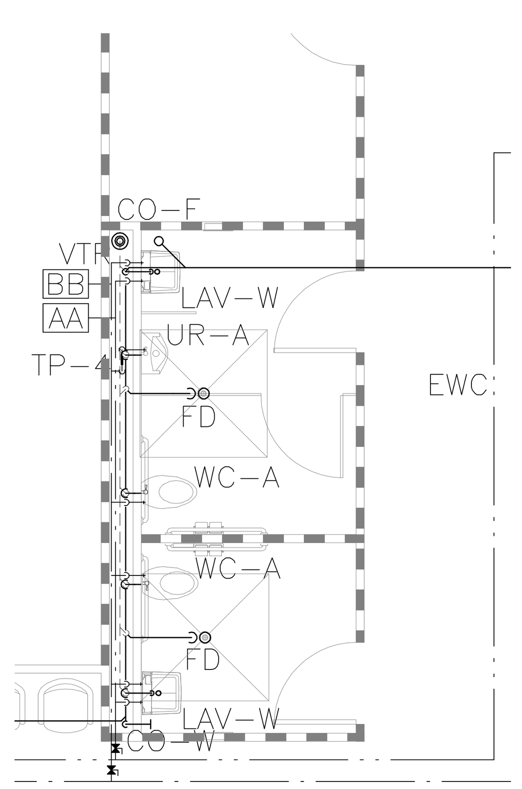

2 ENLARGED RESTROOM DETAIL
SCALE: 1/4" = 1'-0"

KEYED NOTES -

1. EXTEND SANITARY VENT THROUGH ROOF LINE AT LEAST 12" MAINTAINING AT LEAST 10FT FROM ANY OPENING IN BUILDING.
2. MANIFOLD VENTS TOGETHER SLOPE AWAY FROM VENT THROUGH ROOF.
3. SANITARY VENT UP INSIDE CHASE, MANIFOLD VENTS TOGETHER SLOPE AWAY FROM VENT THROUGH ROOF.
4. SANITARY VENT UP INSIDE WALL, ROUTE ABOVE CEILING.
5. WASTE DOWN THROUGH SLAB, COORDINATE WITH STRUCTURAL TO CLEAR GRADE BEAMS.
6. BUILDING DOMESTIC WATER SUPPLY, ROUTE UNDER SLAB AND STUB UP IN EXTERIOR WALL TO ABOVE CEILING.
7. PIPE WATER DOWN INSIDE CHASE, ROUTED FROM ABOVE CEILING.
8. PIPE WATER DOWN INSIDE WALL, ROUTED FROM ABOVE CEILING.
9. PROVIDE AND INSTALL WATER HEATER DRAIN PAN WITH 1"ø TYPE "K" COPPER HARD DRAWN DRAIN FROM PAN TO MOP SINK ELBOW IN THE DOWN POSITION.
10. PROVIDE AND INSTALL WATER HEATER T&P VALVE WITH 1"ø TYPE "K" COPPER HARD DRAWN RELIEF DRAIN FROM VALVE TO MOP SINK ELBOW IN THE DOWN POSITION.
11. GAS LINE SHALL RUN UNDERGROUND UP TO THE BUILDING. CONTRACTOR SHALL INSTALL AND PROVIDE A TRANSITION GAS RISER, GAS PLUG COCK VALVE AND UNION. INSTALL VALVE 24" AFG AT THE TOP OF THE GAS RISER IN THE HORIZONTAL POSITION. RUN GAS LINE THROUGH EXTERIOR WALL AND INTO THE BUILDING. PROVIDE LEAK SEAL TO ENSURE A WEATHER TIGHT PENETRATION. PIPE UP AND ROUTE INSIDE BUILDING JUST BELOW BOTTOM OF THE ROOF PERLINS DROP DOWN TO EACH HEATER.
12. PIPE DOWN EXPOSED. INSTALL ANCHORS TO SUPPORT PIPE AND HOSE BIBB TO WALL, INSTALL A 3/4" HOSE BIBB ON INSIDE WALL, 18" A.F.F.
13. PROVIDE A VERTICAL DROP AND DIRT LEG AT EACH HEATER. REFER TO HEATER DETAILS.
14. PROVIDE AND INSTALL AN ACCESSIBLE LOCKING BALL VALVE, LOCKED IN THE OPEN POSITION.
15. PROVIDE AND INSTALL AN ADDITIONAL QUICK DISCONNECT TO AIR DROP WITH AN ADDITIONAL QUICK DISCONNECT TO THE EXTERIOR OF THE BUILDING.
16. ALL PIPING IN OPEN BAYS, PIPE UP, ROUTE INSIDE BUILDING JUST BELOW BOTTOM OF ROOF DECKING.
17. FIRE CHALK ALL PENETRATIONS IN FIRE WALL. (SEE GENERAL NOTES).
18. FROST PROOF WALL HYDRANT SHALL FIT WITHIN WALL COORDINATE WITH ARCHITECTURAL DRAWINGS.
19. PROVIDE 24 x 24 ACCESS PANEL. REFER TO ARCHITECTURAL SPECIFICATIONS.
20. MAKE SURE FLOOR DRAIN IS CLEAR OF GRADE BEAMS DURING INSTALLATION.

0' 2' 4' 8' 16'

SYMBOL SCHEDULE

Symbol	Description
——	SANITARY WASTE PIPING
— — —	SANITARY VENT PIPING
— - —	COLD WATER PIPING
— - - —	HOT WATER SUPPLY
— - - - —	HOT WATER RETURN
— HHW —	HEATING HOT WATER SUPPLY
— HHR —	HEATING HOT WATER RETURN
— CHS —	CHILLED WATER SUPPLY
— CHR —	CHILLED WATER RETURN
— NG —	NATURAL GAS PIPING
— LPG —	LIQUID PETROLEUM GAS
— CND —	CONDENSATE DRAIN LINES
— REF —	REFRIGERANT PIPING
— CA —	COMPRESSED AIR PIPING
— OIL —	LUBRICANT PIPING
— GR —	GREASE PIPING
	HOSE BIBB
AA	WATER HAMMER ARRESTOR
	TEMP & PRESSURE VALVE
	BACKFLOW PREVENTER
	CHECK VALVE
CHR	CONTROL VALVE
NG	PRESURE REDUCING VALVE
	PIPE DROP
	PIPE RISER
	P-TRAP
	VALVE IN VALVE BOX
CHR	GATE VALVE
	BALL VALVE
VTR	VENT THRU ROOF
NG	TRENCH UNDER PAVEMENT INSTALL WITH SLEEVE

APPLIES TO ALL P-SHEETS
GENERAL NOTES

1. NOTE THAT CONSTRUCTION DRAWINGS ARE DIAGRAMMATIC BY THEIR NATURE, AND ARE NOT INTENDED TO SHOW EVERY CONNECTION IN DETAIL OR EVERY PIPE OR CONDUIT IN ITS EXACT LOCATION. FEATURES AND COMPONENTS NOT SHOWN ARE SUBJECT TO THE REQUIREMENTS OF STANDARDS REFERENCED ELSEWHERE IN THE CONSTRUCTION DOCUMENTS. THE CONTRACTOR SHALL COORDINATE THE VARIOUS TRADES IN ORDER TO AVOID INTERFERENCE BETWEEN THE VARIOUS SEGMENTS OF THE PROJECT. CONTRACTOR SHALL VERIFY ALL CRITICAL BUILDING DIMENSIONS FROM THE ARCHITECTURAL AND STRUCTURAL DRAWINGS.
2. ALL WORK SHALL BE INSTALLED PARALLEL OR PERPENDICULAR TO THE BUILDING LINES UNLESS NOTED OTHERWISE.
3. ALL COLD AND HOT WATER PIPING ABOVE SLAB SHALL BE HARD DRAWN TYPE "K" COPPER.
4. ALL COLD AND HOT WATER PIPING UNDER SLAB SHALL BE SOFT DRAWN TYPE "K" COPPER. MINIMIZE JOINT CONNECTIONS UNDER SLAB
5. COPPER SWEAT CONNECTIONS SHALL BE USED IN THE ASSEMBLY OF COPPER PIPING. USE ONLY SILVER OR ANTIMONY SOLDER, LEAD IS PROHIBITED.
6. USE DIELECTRIC UNIONS AT ALL CONNECTIONS BETWEEN COPPER AND GALVANIZED, IRON, OR STEEL PIPING.
7. USE DIELECTRIC UNIONS ON WATER HEATER CONNECTIONS. BOND HOT WATER AND COLD WATER PIPING WITH No. 8 AMERICAN WIRE GAUGE COPPER WIRE AND COPPER PIPE CLAMPS TO MAINTAIN GROUNDING ON HOT WATER PIPING. INSTALL AND PROVIDE FLEXIBLE CORRUGATED COPPER CONNECTORS PLACE LOOP IN CONNECTOR MAXIMUM TOTAL LENGTH 24".
8. ALL WATER PIPING SHALL SLOPE A MINIMUM OF 1/8" PER FOOT (1%) TO DRAIN TO ALL FIXTURES, HOSE BIBBS AND HOT WATER HEATERS TO ALLOW FOR WINTERIZATION.
9. ALL WASTE PIPING UNDER SLAB AND UP TO 5 FEET OUTSIDE THE BUILDING SHALL BE SERVICE WEIGHT CAST IRON BELL AND SPIGOT LABELED ASTM-74.
10. ALL WASTE AND VENT PIPING ABOVESLAB SHALL BE NO-HUB CAST IRON LABELED ASTM-888.
11. ALL HORIZONTAL WASTE AND VENT PIPING SHALL SLOPE 1/4" PER FOOT (2%), TOWARD THE DIRECTION OF WASTE FLOW.
12. PROVIDE SLEEVES FOR ALL GRADE BEAM PENETRATIONS. REFER TO STRUCTURAL DRAWINGS FOR GRADE BEAM PENETRATION REQUIREMENTS.
13. ALL FLOOR DRAINS SHALL BE FITTED WITH A TRAP PRIMER ACTIVATED BY A SURGE IN PRESSURE. RUN 1/2" COPPER TUBING FROM FLOOR DRAIN TO THE NEAREST AVAILABLE TRAP PRIMER DISTRIBUTION UNIT. INSTALL IN-LINE TRAP PRIMERS IN ADJACENT WATER SUPPLY FLUSH VALVE LINES AS INDICATED IN RISER DIAGRAMS.
14. ALL EXPOSED PIPING UNDER LAVATORIES SHALL BE INSULATED WITH SPECIFIED INSULATION.
15. INSULATION FOR COLD WATER PIPING STARTS AT THE BOTTOM OF THE SLAB PENETRATION. INSULATE ALL HOT WATER PIPING. (SEE SPECIFICATIONS).
16. ROOF CONTRACTOR SHALL INSTALL ALL ROOF PENETRATIONS IN THE APPROXIMATE LOCATIONS SHOWN IN PLANS. NOTE ALL ROOF PENETRATIONS ON THE OFFICE BUILDING SHALL BE LOCATED ON THE BACKSIDE OF RIDGE CAP. ALL ROOF PENETRATIONS SHALL BE INSTALLED PER ARCHITECTURAL DRAWINGS AND SPECIFICATIONS.
17. SUPPORT ALL ABOVE GRADE PIPING ON 6 FOOT CENTERS. USE UNISTRUT AND BRACES/TRAPEZES MADE OF UNISTRUT OR PER MANUFACTURER RECOMMENDATIONS.
18. CONTRACTOR IS RESPONSIBLE FOR COORDINATING, FILLING AND PAYING FOR ALL ASSOCIATED FEES AND PERMITS AS PART OF THIS BID PACKAGE.
19. SLEEVE ALL SLAB PENETRATIONS WITH SCHEDULE 40 PVC. SLEEVE SHALL BE 2 PIPE SIZES LARGER THAN PENETRATING PIPE. MAINTAIN INSULATION THROUGH SLEEVES.
20. SLEEVE ALL WALL PENETRATIONS WITH SLEEVE 2 PIPE SIZES LARGER THAN PENETRATING PIPE. SLEEVE AND PENETRATING PIPE SHALL BE CONSTRUCTED FROM THE SAME MATERIAL. MAINTAIN INSULATION THROUGH SLEEVES.
21. ALL EXTERIOR, SLAB AND CONDITIONED TO NON-CONDITIONED PENETRATIONS, PACK ANNULAR SPACE WITH MINERAL WOOL. SEAL EACH EXTERIOR END AND TOP END OF SLAB PENETRATION WITH SEALANT (SEE ARCHITECTURAL SPECIFICATIONS).
22. FIRE CHAULK ALL PENETRATIONS WHERE ARCHITECTURAL PLANS CALL FOR FIRE RATED CONSTRUCTION WALLS. STOP INSULATION SHORT OF SLEEVE FILL ANNULAR SPACES WITH FIRE RATED CHAULK.
23. ALL SANITARY DRAINAGE, VENT PIPING, FUEL PIPING, HOT AND COLD WATER SHALL BE PRESSURE TESTED BY THE CONTRACTOR AT WHICH TIME THE OWNER'S REPRESENTITIVE SHALL WITNESS THE PRESSURE TEST. REFERENCE THE SPECIFICATIONS FOR FURTHER REQUIREMENTS.

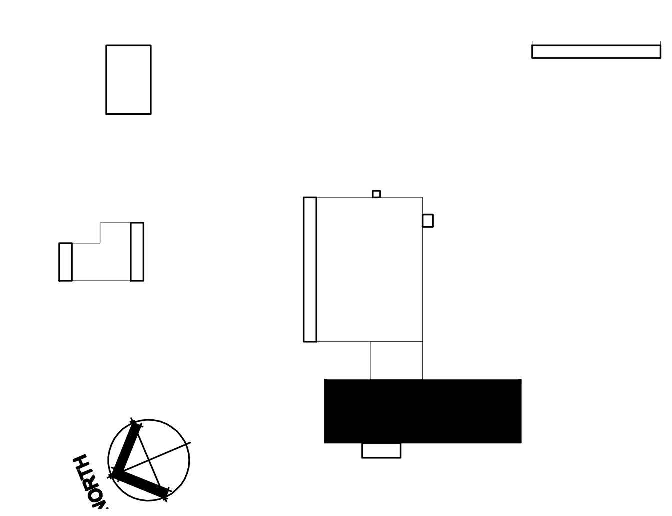

KEY PLAN

PLUMBING PLAN - OFFICE BUILDING

NOTE: THIS DRAWING WAS CREATED FOR PRODUCTION ON 22" x 34" SHEET SIZE. DO NOT SCALE PRINTS.

Texas Department of Transportation
125 E. 11th Street
Austin, Texas 78701-2483
(512) 416-3040
Copyright © 2005 Texas Department of Transportation

THIS DOCUMENT IS RELEASED FOR THE PURPOSE OF INFORMATION ONLY
NOT FOR REGULATORY APPROVAL, PERMITTING, OR CONSTRUCTION.

WACO AREA ENGINEER AND MAINTENANCE FACILITY
WACO, MCLENNAN COUNTY
WACO DISTRICT

Revisions

Drawn by: KCR
Project No. CBC4704-00672
Date 05.21.2007
Sheet No. P2.1
of 9P sheets

CADFILE: T:\MNT\MOD22\TWCBC4704-00-557\02-7-4704-00557\Acad\prototypical pdf\waco\Acad\MEP\PLMB\P2_1.dwg Plotted: Fri, Aug. 07, 2009 @ 1:28 PM By: MBAZAN

CADFILE: T:\MNTFMD02\FTW\CBC4704-00-837\02-77-47040000837\Acad\prototypical pdfs\waco\Acad\MEP\PLMB\P2_2.dwg Plotted: Fri. Aug. 07, 2009 @ 1:40 PM By: MBAZAN

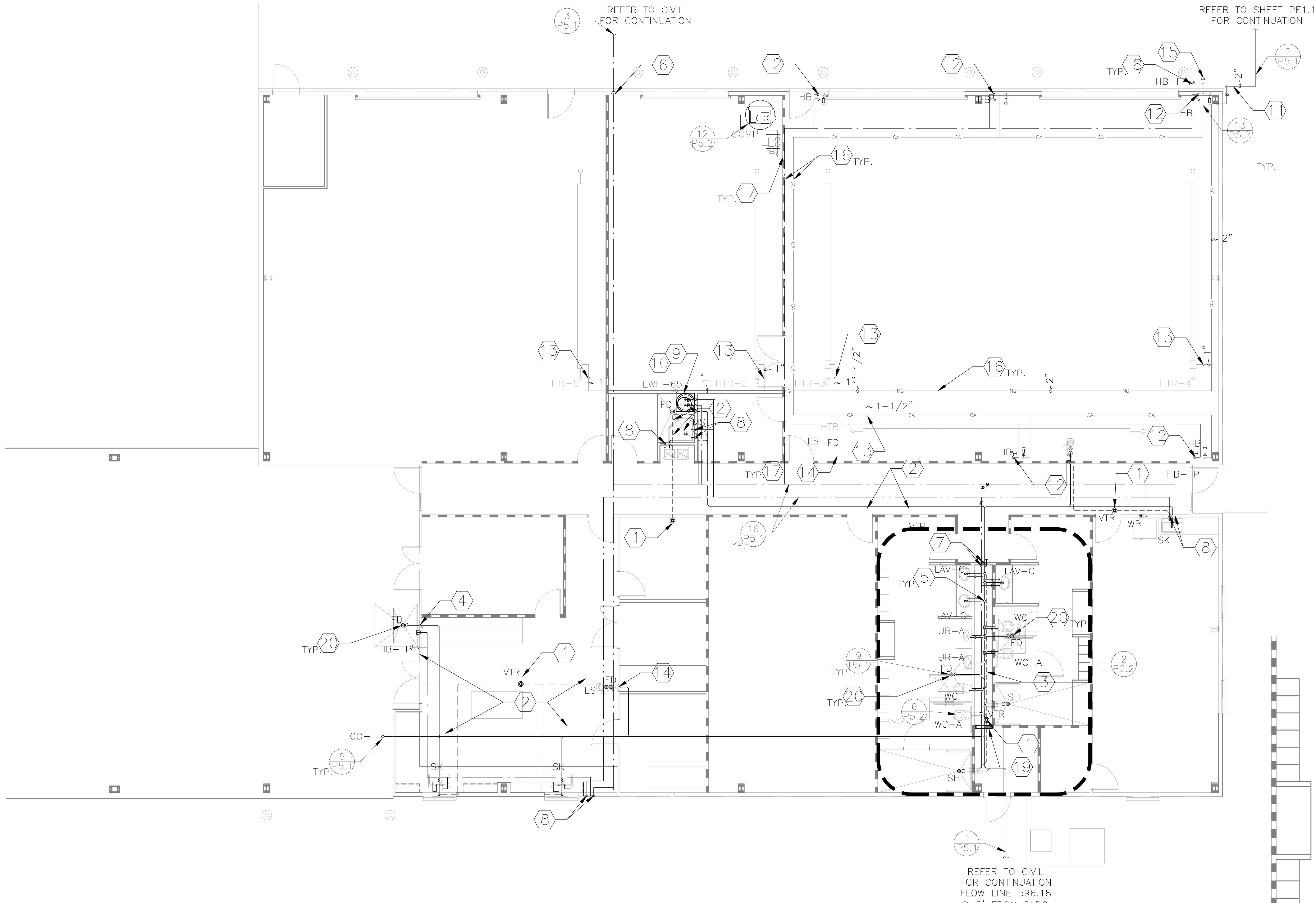

1 PLUMBING FLOOR PLAN - LAB/SHOP BUILDING

SCALE: 1/8" = 1'-0"

APPLIES TO ALL FUEL GAS PIPING

GENERAL NOTES

1. NOTE THAT CONSTRUCTION DRAWINGS ARE DIAGRAMMATIC BY THEIR NATURE, AND ARE NOT INTENDED TO SHOW EVERY CONNECTION IN DETAIL OR EVERY PIPE OR CONDUIT IN ITS EXACT LOCATION. FEATURES AND COMPONENTS NOT SHOWN ARE SUBJECT TO THE REQUIREMENTS OF STANDARDS REFERENCED ELSEWHERE IN THE CONSTRUCTION DOCUMENTS. THE CONTRACTOR SHALL COORDINATE THE VARIOUS TRADES IN ORDER TO AVOID INTERFERENCE BETWEEN THE VARIOUS SEGMENTS OF THE PROJECT. CONTRACTOR SHALL VERIFY ALL CRITICAL BUILDING DIMENSIONS FROM THE ARCHITECTURAL AND STRUCTURAL DRAWINGS.
2. ALL FUEL GAS PIPING SHALL BE INSTALLED PARALLEL OR PERPENDICULAR TO THE BUILDING LINES UNLESS NOTED OTHERWISE ALL CONNECTIONS SHALL BE MADE AT THE TOP OR SIDE OF FUEL GAS PIPING. CONNECTIONS TO THE BOTTOM SIDE OF GAS PIPING ARE NOT ACCEPTABLE.
3. ALL FUEL GAS PIPING UP TO 2" SHALL BE SCHEDULE 40 BLACK STEEL, THREADED WITH NPT PIPE THREADS. ALL JOINTS SHALL BE SEALED WITH TEFLON BASED PIPE DOPE MATERIAL AND TELFLON TAPE, INSOLUBLE IN THE PRESENCE OF GAS. ALL NATURAL GAS PIPING ABOVE 2" SHALL BE BLACK STEEL WITH WELDED FITTINGS. ALL WELDED JOINTS SHALL BE MADE BY A CERTIFIED PIPE WELDER AS DEFINED IN THE LATEST EDITION OF THE UNIFORM PLUMBING CODE.
4. SUPPORT ALL PIPING ON 6' CENTERS. USE UNISTRUT AND BRACES/TRAPEZES MADE OF UNISTRUT OR PER MANUFACTURER RECOMMENDATIONS.
5. PRESSURE TEST (DOWNSTREAM OF SERVICE REGULATOR) SHALL BE PERFORMED BY CONTRACTOR BEFORE INTRODUCING FUEL GAS TO THE SYSTEM AT WHICH TIME THE OWNER'S REPRESENTITIVE SHALL WITNESS THE TEST. CONTRACTOR SHALL ISOLATE ALL PRESSURE REGULATORS DURING LEAK TEST AND FIX ALL LEAKS. REFERENCE THE SPECIFICATIONS FOR ADDITIONAL REQUIREMENTS.
6. CONTRACTOR SHALL MEET THE MANUFACTURER'S RECOMMENDED INLET PRESSURE ON ALL RADIANT HEATERS TO ACHIEVE A FULLY FUNCTIONAL HEATING SYSTEM.
7. TAG ALL FUEL GAS PRESSURE REGULATORS SHOWING OPERATING PRESSURE IN INCHES OF WATER COLUMN AND LABELED NATURAL GAS.
8. CONTRACTOR SHALL INSTALL A UNION AND A FUEL GAS PLUG VALVE AT EVERY BUILDING ENTRY.
9. FUEL GAS PIPING INSTALLED BELOW GRADE SHALL BE EFFECTIVELY SUPPORTED AT ALL POINTS ON UNDISTURBED OR WELL COMPACTED SAND (SEE DETAILS).
10. ALL PROTECTIVELY COATED UNDERGROUND FUEL GAS PIPING SHALL BE INSPECTED BY OWNER'S REPRESENTATIVE FOR DAMAGE AND OR IMPERFECTIONS TO THE PIPE COATING. CONTRACTOR SHALL REPAIR NOTED AREAS AND HOLIDAYS PRIOR TO BACKFILLING TRENCH.
11. CONTRACTOR SHALL INSTALL A SLEEVE WHEN FUEL GAS PIPING PASSES UNDER PAVEMENT AND/OR CONCRETE. THE INSTALLED SLEEVE SHALL BE A MINIMUM OF TWO SIZES LARGER THAN THE SLEEVED GAS PIPING, THE SLEEVE SHALL BE SCHEDULE 80 PVC, OR C-900 PVC.
12. ALL UNDERGROUND FUEL GAS SUPPLY PIPING SHALL BE POLYMER COATED BLACK PIPE SCHEDULE 40. GAS PIPING INSTALLED UNDERGROUND IN EXTERIOR LOCATIONS SHALL BE PROTECTED FROM CORROSION BY APPROVED COATINGS MACHINE APPLIED AS SPECIFIED. FIELD WRAPPING SHALL BE INSTALLED AT JOINTS AND AREAS WHERE COATINGS HAVE BEEN DAMAGED OR INTERRUPTED.
13. ALL FUEL GAS PIPING SHALL BE PAINTED "SAFETY YELLOW".

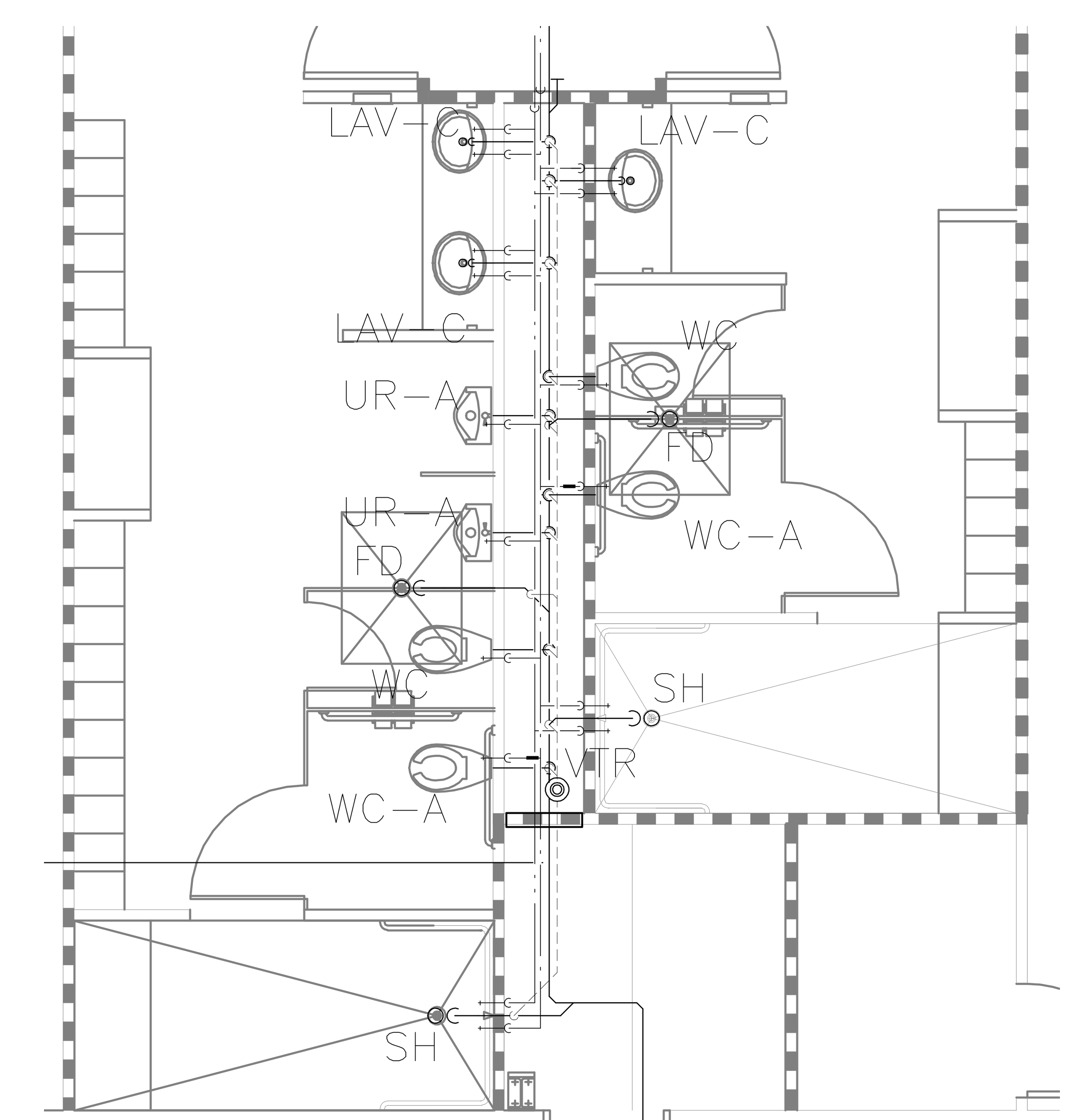

2 ENLARGED RESTROOM DETAIL

SCALE: 1/4" = 1'-0"

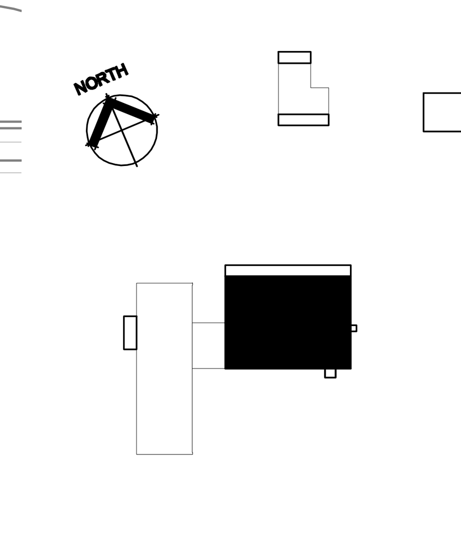

KEY PLAN

SEE P2.1 FOR PLUMBING GENERAL & KEYED NOTES

Texas Department of Transportation
125 E. 11th Street
Austin, Texas 78701-2483
(512) 416-3048

Copyright © 2005 Texas Department of Transportation

THIS DOCUMENT IS RELEASED FOR THE PURPOSE OF INFORMATION ONLY
NOT FOR REGULATORY APPROVAL, PERMITTING, OR CONSTRUCTION.

WACO AREA ENGINEER AND MAINTENANCE FACILITY
WACO, MCLENNAN COUNTY WACO DISTRICT

Revisions

Drawn by: KCR

Project No. CBC4704-00672

Date 05.21.2007

Sheet No. P2.2

of 9P sheets

PLUMBING PLAN - LAB/SHOP BUILDING

NOTE: THIS DRAWING WAS CREATED FOR PRODUCTION ON 22" x 34" SHEET SIZE. DO NOT SCALE PRINTS.

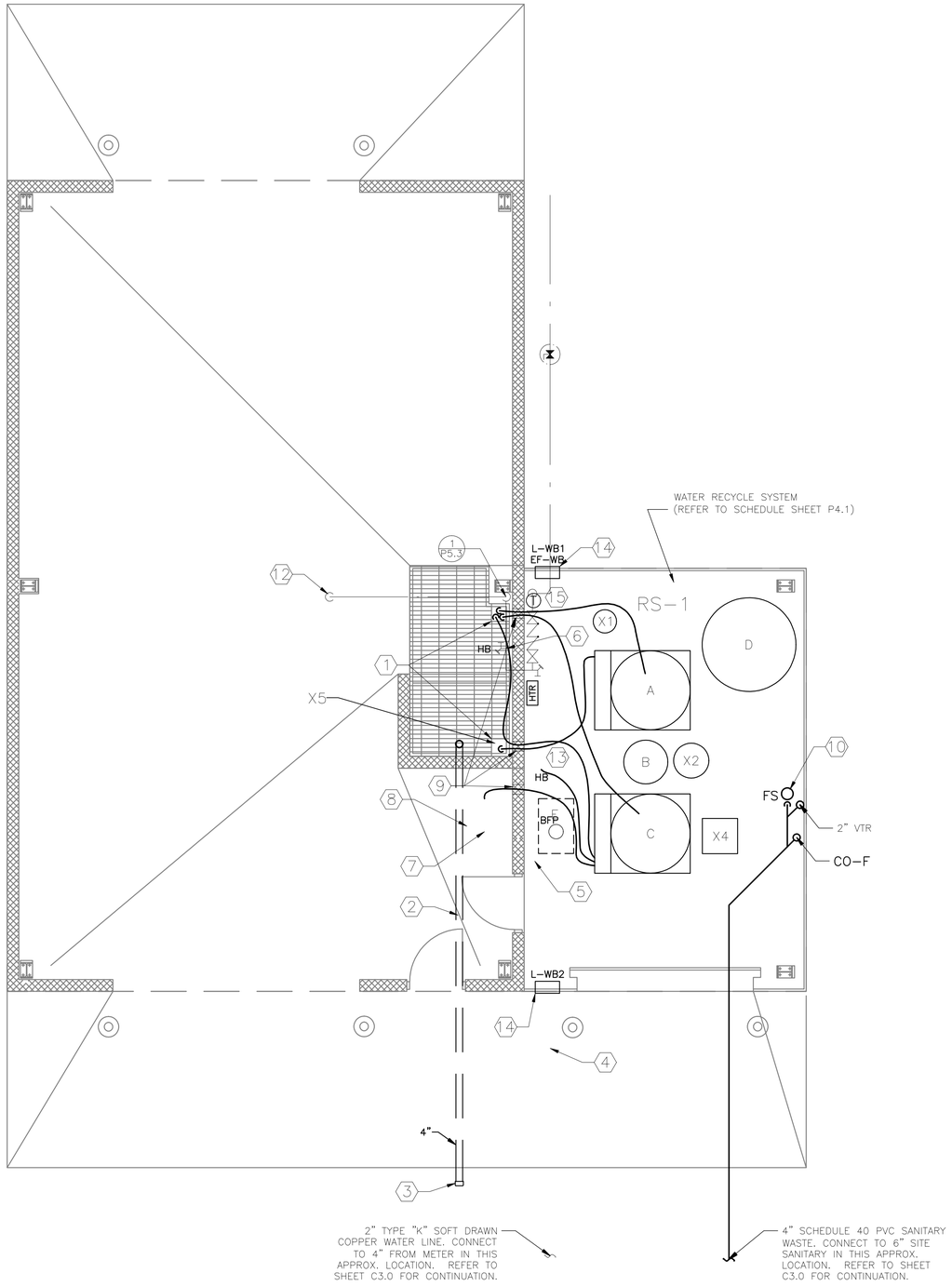

1 PLUMBING PLAN - WASH BAY
SCALE: 1/4" = 1'-0"

0' 1' 2' 4' 8'

KEYED NOTES "⬡"
THIS SHEET ONLY

1. PROVIDE BANDED CUT IN CORNER OF GRATE.
2. INSTALL 4" PVC DRAIN FOR FUTURE USE. SLOPE 1/4" PER FOOT AWAY FROM SUMP. PENETRATE GRADE BEAM WITH 6" PVC SLEEVE AND INSTALL DRAIN WITHIN SLEEVE. SEE STRUCTURAL FOR ADDITIONAL INFORMATION.
3. CAP PIPE 24" FROM CONCRETE, AND MARK WITH A 24" LONG, TREATED 2 X 4, PROJECTING FROM THE GROUND 2".
4. SOFT DRAWN 2" TYPE "K" COPPER PIPE. INSTALL BURIED MINIMUM OF 24". DO NOT PENETRATE GRADE BEAMS.
5. STUB UP THRU SLAB RIGID, HARD DRAWN 2" TYPE "K" COPPER PIPING THRU WALL FOR TRUCK FILL POST. INSTALL 3/4" HOSE BIBBS ON BOTH SIDES OF WALL. FASTEN TO WALL FOR SUPPORT USING 2", 20 GA. GALVANIZED STEEL STRAPS MOUNTED TO WALL WITH WATERPROOF CONNECTIONS.
6. SECURE HOSE BIBBS TO ADJACENT CONSTRUCTION.
7. PROVIDE DRAFT DAMPER IF RECOMMENDED BY MANUFACTURER. EXTEND 8" TYPE "B" VENT FROM PRESSURE WASHER TO MINIMUM 24" ABOVE ROOF OF WASHBAY. TRANSITION AS NECESSARY FROM PRESSURE WASHER. PROVIDE A MINIMUM OF TWO INTERMEDIATE SUPPORTS ON VENT STACK WITHIN WASHBAY AND WEATHERPROOF VENT CAP. INSTALL AS RECOMMENDED BY MANUFACTURER.
8. PRESSURE WASHER – SEE SCHEDULE AND SPECS. REMOVE WHEELS FROM PRESSURE WASHER AND ANCHOR TO SLAB USING BOLTS AND LEAD INSERTS.
9. 6" PVC SLEEVES IN WALL INSTALLED UNDER ARCHITECTURAL. SEE SHEET A2.4.
10. INSTALL SCHEDULED FLOORSINK WITH TRAP. INSTALL 4" SCHED. 40 PVC WITH 1/8" PER FOOT SLOPE. PENETRATE GRADE BEAMS IN MIDDLE 1/3 OF BEAM WITH 6" PVC SLEEVE. CENTER PIPE WITHIN SLEEVE.
11. NOT USED.
12. INSTALL TRUCK FILL POST. REFER TO DETAIL 1/P5.3.
13. MARK ALL PIPING AS NON-POTABLE WATER.
14. REFER TO MECHANICAL EQUIPMENT SCHEDULES FOR INFORMATION. MOUNT FAN AND LOUVER WITHIN 12" OF UNDERSIDE OF ROOF.
15. MOUNT THERMOSTAT (SEE EXHAUST FAN SCHEDULE) AT 48" A.F.F. THERMOSTAT SHALL CONTROL EF-WB AND L-WB MOTORIZED DAMPER.

SEE P2.1 FOR PLUMBING GENERAL NOTES

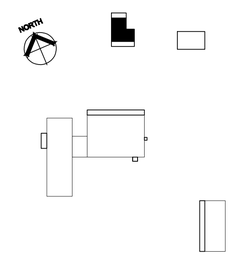

Texas Department of Transportation
125 E. 11th Street
Austin, Texas 78701-2483
(512) 416-3000
Copyright © 2005 Texas Department of Transportation

THIS DOCUMENT IS RELEASED FOR THE PURPOSE OF
INFORMATION ONLY
NOT FOR REGULATORY
APPROVAL, PERMITTING,
OR CONSTRUCTION.

WACO AREA ENGINEER
AND MAINTENANCE FACILITY
WACO, MCLENNAN COUNTY
WACO DISTRICT

Revisions

Drawn by: KCR
Project No. CBC4704-00672
Date 05.21.2007
Sheet No.
P2.3
of 9P sheets

PLUMBING PLAN - WASH BAY

NOTE: THIS DRAWING WAS CREATED FOR PRODUCTION ON 22" x 34" SHEET SIZE. DO NOT SCALE PRINTS.

CADFILE: T:\MNTR\M200\FTW\CBC4704-00-637\02-77-4704X00637\Acad\proto\typical pdf\sheets\Acad\MEP\PLUMP2_3.dwg Plotted: Fri, Aug. 07, 2009 @ 1:40 PM By: MBAZAN

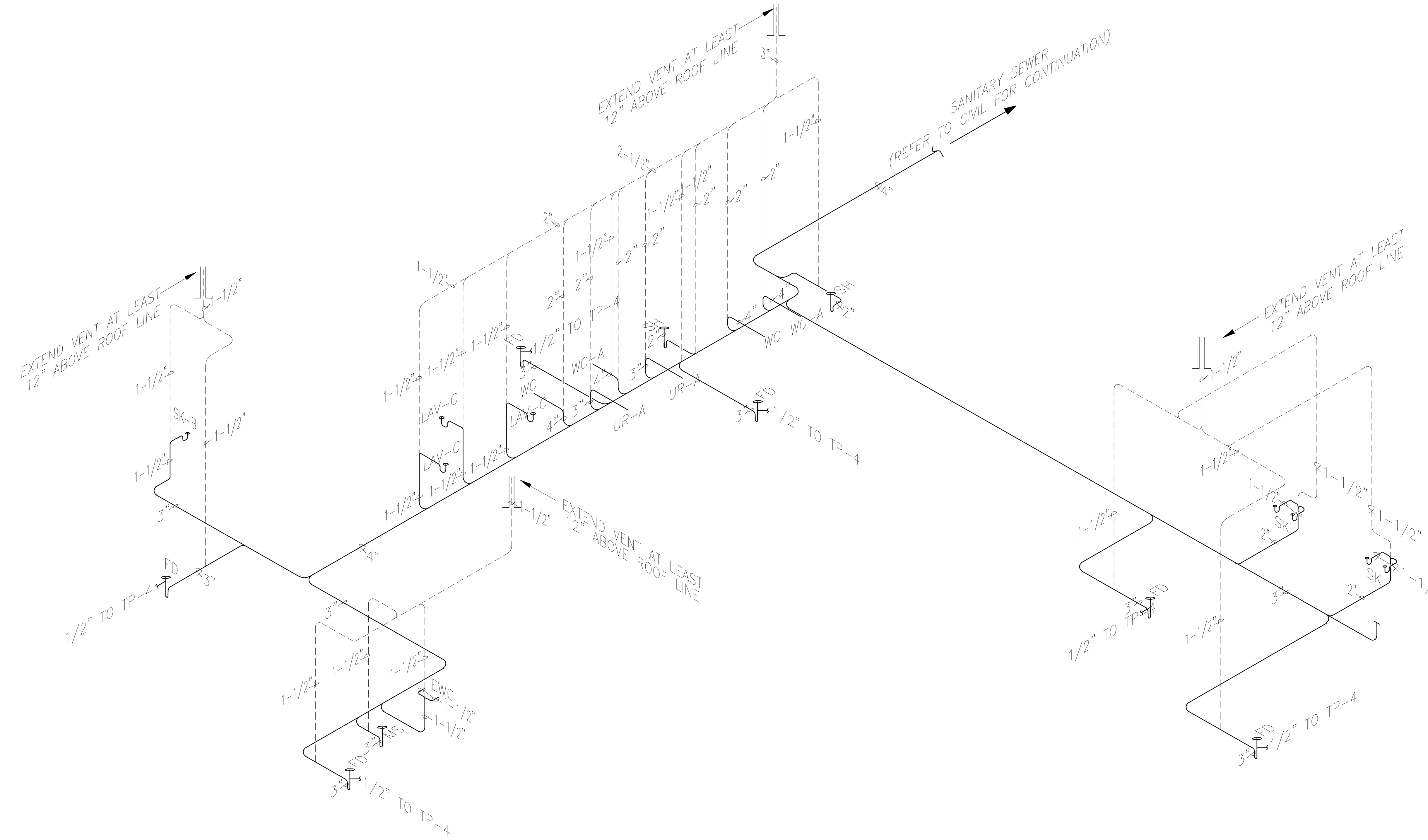

1 LAB/SHOP BUILDING SANITARY SEWER RISER

SCALE: NOT TO SCALE

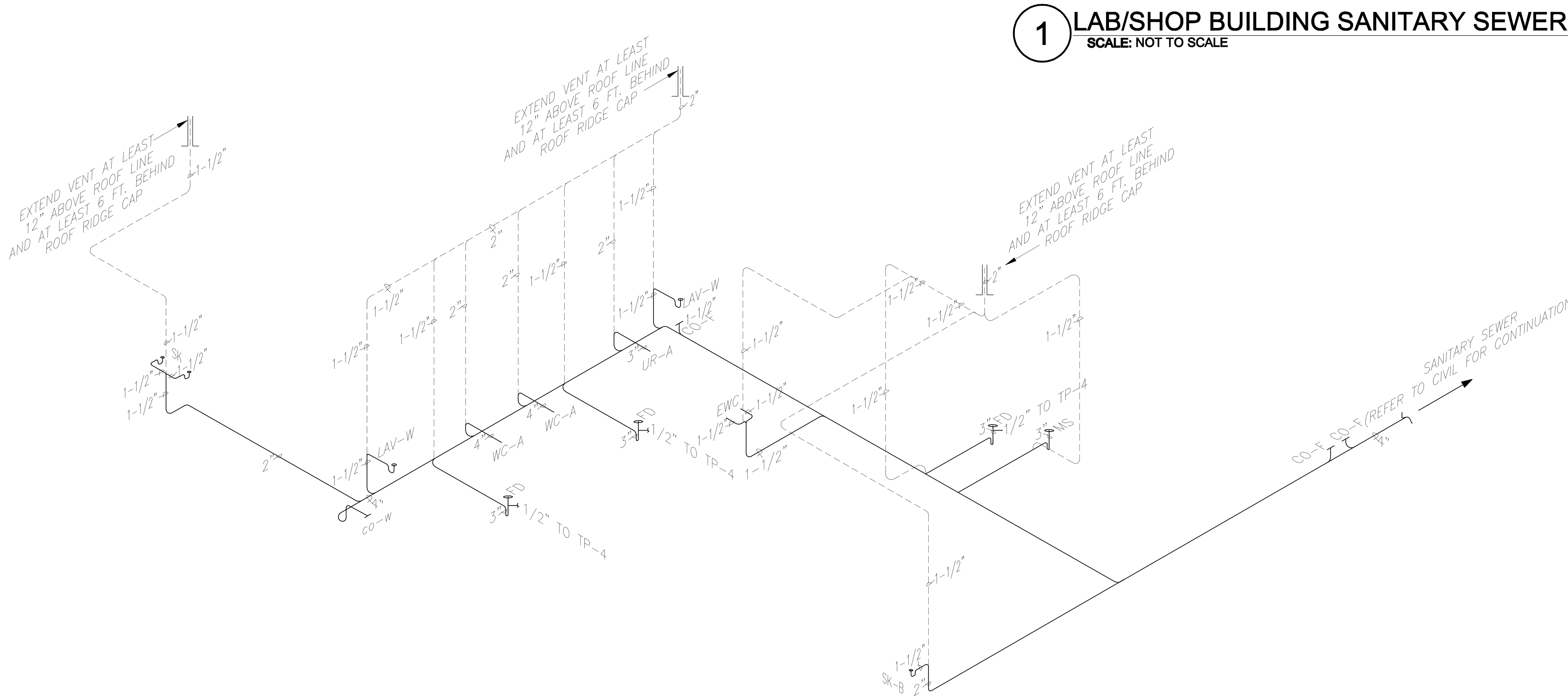

2 OFFICE BUILDING SANITARY SEWER RISER

SCALE: NOT TO SCALE

PLUMBING RISER DIAGRAMS - SANITARY SEWER

NOTE: THIS DRAWING WAS CREATED FOR PRODUCTION ON 22" x 34" SHEET SIZE. DO NOT SCALE PRINTS.

Texas Department of Transportation

THIS DOCUMENT IS RELEASED FOR THE PURPOSE OF INFORMATION ONLY NOT FOR REGULATORY APPROVAL, PERMITTING, OR CONSTRUCTION.

WACO AREA ENGINEER AND MAINTENANCE FACILITY

WACO, MCLENNAN COUNTY

WACO DISTRICT

Revisions

Drawn by: KCR

Project No. CBC4704-00672

Date 05.21.2007

Sheet No.

P3.1

of 9 P sheets

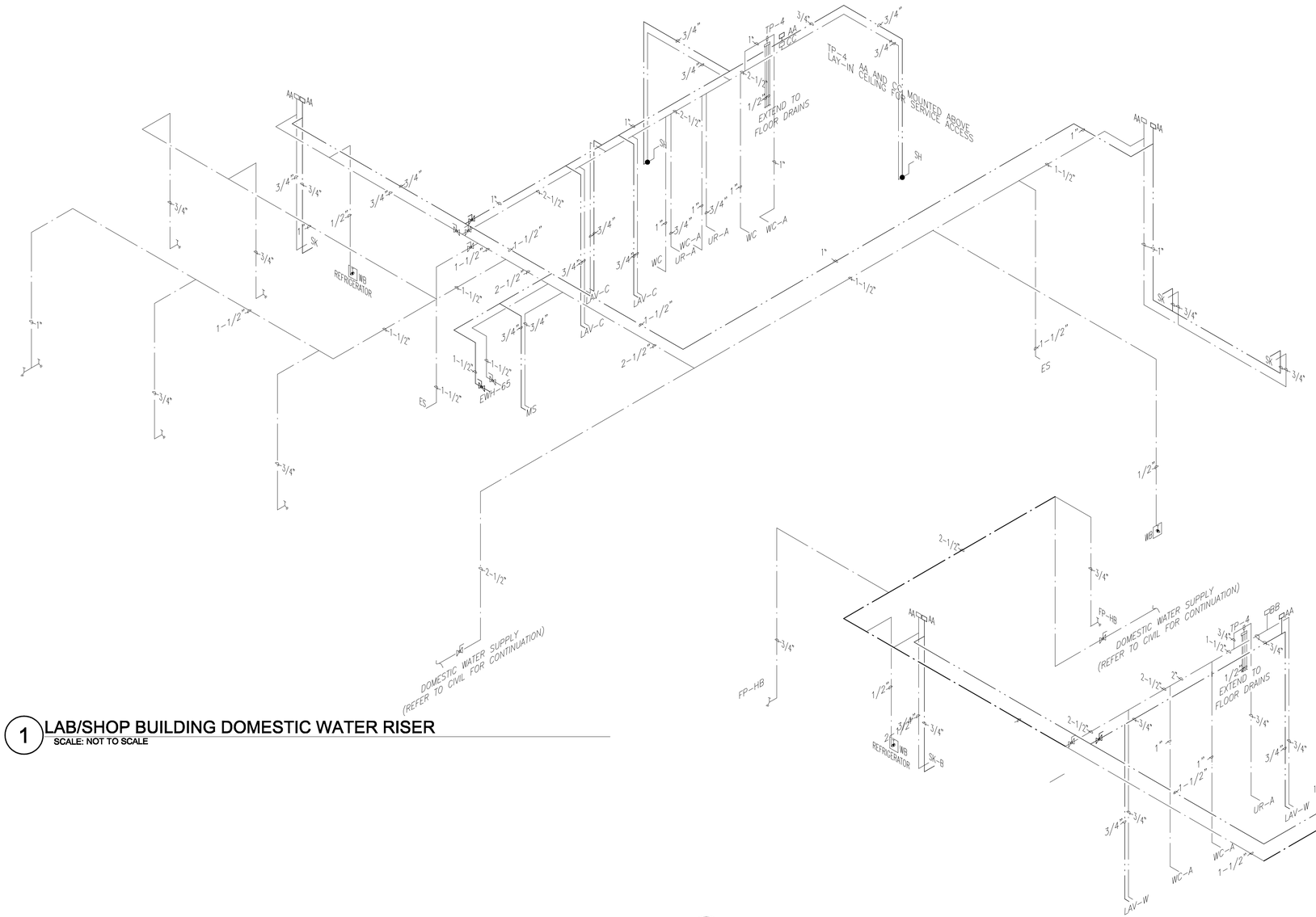

1 LAB/SHOP BUILDING DOMESTIC WATER RISER
SCALE: NOT TO SCALE

2 OFFICE BUILDING DOMESTIC WATER RISER
SCALE: NOT TO SCALE

PLUMBING RISER DIAGRAMS - DOMESTIC WATER

NOTE: THIS DRAWING WAS CREATED FOR PRODUCTION ON 22" x 34" SHEET SIZE. DO NOT SCALE PRINTS.

Texas Department of Transportation
125 E. 11th Street
Austin, Texas 78701-2483
(512) 416-3000

Copyright © 2005 Texas Department of Transportation

THIS DOCUMENT IS RELEASED FOR THE PURPOSE OF
INFORMATION ONLY
NOT FOR REGULATORY
APPROVAL, PERMITTING,
OR CONSTRUCTION.

WACO AREA ENGINEER
AND MAINTENANCE FACILITY
WACO, MCLENNAN COUNTY
WACO DISTRICT

Revisions

Drawn by:
KCR
Project No.
CBC4704-00672
Date
05.21.2007
Sheet No.

P3.2
of 9P sheets

CADFILE: T:\MNTR\WDGF\WCBC4704-00-637\02-77-4704006377\acad\prototype\bid pdf\texas\Acad\MEP\PLUMB\P3_1_and P3_2.dwg Plotted: Fri, Aug. 07, 2009 @ 1:41 PM By: MBAZAN

PLUMBING FIXTURE SCHEDULE

EQUIPMENT CONNECTIONS LISTED BELOW: SYMBOL	COLD	HOT	WASTE	VENT	MANUFACTURER MODEL# WITH DESCRIPTION
AA	3/4"	3/4"	N/A	N/A	WADE MODEL#5 SHOKSTOP WITH A FIXTURE UNIT CAPACITY RANGE 1-11, ALL STAINLESS STEEL CONSTRUCTION WITH WELDED NESTED BELLOWS. LOCATE ABOVE REMOVABLE TILE DROP CEILING OR ACCESSIBLE FROM ACCESS DOOR AS INDICATED ON RISER DIAGRAM.
BB	1"	1"	N/A	N/A	WADE MODEL#10 SHOKSTOP WITH A FIXTURE UNIT CAPACITY RANGE 12-32, ALL STAINLESS STEEL CONSTRUCTION WITH WELDED NESTED BELLOWS. LOCATE ABOVE REMOVABLE TILE DROP CEILING OR ACCESSIBLE FROM ACCESS DOOR AS INDICATED ON RISER DIAGRAM.
CC	1"	1"	N/A	N/A	WADE MODEL#20 SHOKSTOP WITH A FIXTURE UNIT CAPACITY RANGE 33-60, ALL STAINLESS STEEL CONSTRUCTION WITH WELDED NESTED BELLOWS. LOCATE ABOVE REMOVABLE TILE DROP CEILING OR ACCESSIBLE FROM ACCESS DOOR AS INDICATED ON RISER DIAGRAM.
BFP	2"	N/A	N/A	N/A	WATTS SERIES 007, MODEL #007M1QT-S 2" DOUBLE CHECK VALVE ASSEMBLY, LOW PRESSURE DROP BACKFLOW PREVENTER WITH THREADED CONNECTIONS, TWO RESILIENT SEATED QUARTER TURN BALL VALVES, FOUR TOP MOUNTED RESILIENT SEATED TEST COCKS, AND BRONZE STRAINER. THE CHECK MODULE SEATS AND DISCS SHALL BE REPLACEABLE. THE ASSEMBLY SHALL MEET THE REQUIREMENTS OF ASSE STD. 1015 AND AWWA STD. C510.
CO-F	N/A	N/A	4"	N/A	WADE MODEL#6004TY,1,118 CAST IRON CLEANOUT W/ VANDAL PROOF NICKEL BRONZE SCORIATED TOP, BRONZE GASKET PLUG, FOR TY-SEAL INSTALLATION. WHEN INSTALLED OUTSIDE CLEANOUT SHALL BE ENCASED IN 3" THICK CONCRETE PAD 12" X 12" DIMENSION, WITH CAST IRON TOP. PROVIDE APPROPRATE TOP TO MATCH ARCHITECTURAL FLOOR FINISH SCHEDULE.
CO-W	N/A	N/A	4"	N/A	WADE MODEL#8554,E CAST IRON CLEANOUT FERRULE WITH SPIGOT OUTLET AND THREADED BRASS COUNTERSUNK BRASS PLUG INCLUDING WADE MODEL#8480R8 ROUND STAINLESS STEEL ACCESS COVER.
ES	1-1/4"	N/A	1-1/4"	N/A	BRADLEY MODEL#S19-310BF COMBINATION DRENCH SHOWER AND EYE/FACE WASH UNIT WITH FACE SPRAY RING BARRIER FREE MODEL. UNIT SHALL HAVE A 10ø" YELLOW IMPACT-RESISTANT PLASTIC SHOWER HEAD, SPRAYHEAD ASSEMBLY WITH TWIN EYE WASH HEADS WITH PROTECTIVE COVERS, 10ø" STAINLESS STEEL BOWL, CHROME PLATED FACE SPRAY RING WITH HAND AND FOOT OPERATED STAY OPEN CHROME PLATED BRASS BALL VALVES WITH PRESSURE COMPENSATING DEVICES. ALL PIPE AND FITTINGS SHALL BE GALVANIZED STEEL COATED WITH SAFETY YELLOW. PIPE DRAIN OUTLET TOWARD FLOOR DRAIN.
EWC	3/8"	N/A	1-1/2"	N/A	ELKAY MODEL#LZSTL8 WITH LKAPREZL APRON, SELF CONTAINED WALL HUNG ELECTRIC REFRIGERATED WATER COOLER TWO-LEVEL MODEL. 3.7 FULL LOAD AMPS, 325 WATTS. IREFER TO ARCHITECTURAL FOR MOUNTING HEIGHT TO MEET ADA REQUIREMENTS. PROVIDE AND INSTALL TRAP.
FD	N/A	N/A	3"	N/A	WADE MODEL#1103,TY,STD5,1-27 CAST IRON FLOOR DRAIN WITH INTEGRAL CLAMPING COLLAR, 5ø" ADJUSTABLE NICKEL BRONZE STRAINER, TRAP PRIMER AND SEDIMENT BUCKET. PROVIDE AND INSTALL TRAP.
FD-C	N/A	N/A	4"	N/A	WADE MODEL#2374,TY,26 CAST IRON DEEP SUMP FLOOR DRAIN WITH SQUARE TOP AND LOOSE SET DUCTILE IRON GRATE. PROVIDE AND INSTALL TRAP.
FS	N/A	N/A	4"	N/A	WADE MODEL #9014-14 CAST IRON 8" ROUND FLOOR SINK WITH 6" SUMP, WHITE PORCELAIN COATED INTERIOR, PLASTIC DONE STRAINER AND NICKEL BRONZE TOP WITH HINGED GRATE. INSTALL WITH P-TRAP.
HB-FP	3/4"	N/A	N/A	N/A	WATTS MODEL#FHB-2-4, FROST-PROOF DRAINING WALL HYDRANT 3/4" INLET WITH VACUUM BREAKER. 3/4" HOSE THREAD OUTLET. SPECIFIED WALL THICKNESS IS 4 INCHES. INSTALL 24" A.F.F.
HB	3/4"	N/A	N/A	N/A	WATTS MODEL#SC8-4, 3/4" FEMALE NPT INLET CAST BRASS HOSE BIBB, WITH VACUUM BREAKER. INSTALL 24" A.F.F.
LAV-C	1/2"	1/2"	1-1/4"	N/A	AMERICAN STANDARD MODEL#0475.020, "AQUALYN" 20-3/8" X 17-3/8" WHITE, VITREOUS CHINA, SELF RIMMING, OVAL, COUNTER TOP LAVATORY. CHICAGO FAUCETS #404CP LAVATORY FAUCET INCLUDES MODEL#E12 AERATOR AND MODEL#390 ADA-COMPLIANT CURVED LEVER HANDLES AND OFFSET LAVATORY STRAINER. SUPPLY AND INSTALL WITH STOPS AND BRAIDED STAINLESS STEEL RISER HOSES.
LAV-W	1/2"	1/2"	1-1/4"	N/A	AMERICAN STANDARD MODEL#0356.015, "LUCERNE" 20-1/2" X 18-1/4" WHITE VITREOUS CHINA WALL HUNG LAVATORY. CHICAGO FAUCETS #404CP LAVATORY FAUCET INCLUDES MODEL#E12 AERATOR AND MODEL#390 ADA-COMPLIANT CURVED LEVER HANDLES AND OFFSET LAVATORY STRAINER. SUPPLY AND INSTALL WITH STOPS AND BRAIDED STAINLESS STEEL RISER HOSES. INSTALL ON EXTENDED-ARM, IN-WALL CARRIER BY WADE, ZURN, OR APPROVED EQUAL.
MS	3/4"	3/4"	3"	N/A	ACORN MODEL#TNC-24-BDS-CRS-OC-SH-SSC-TF2-KH36-KMH-KF-KWG-2-24" PRECAST TERRAZZO-WARE NEO-CORNER MOP SINK WITH STAINLESS STEEL WALL GAURDS, 36" HOSE AND MOP HANGER, ALL EXPOSED SURFACES SHALL BE FREE FROM PITS AND IMPERFECTIONS WITH A SEALED SURFACE. INTEGRAL DRAIN SHALL HAVE A STAINLESS STEEL STRAINER AND PROVIDE FOR AN INSIDE CAULKED CONNECTION TO A 3" PIPE WITH TRAP TO BE INSTALLED PER MANUFACTURER'S RECOMMENDATION. CHICAGO FAUCETS #897-RCF-369 ROUGH CHROME FINISH ADJUSTABLE SERVICE SINK FAUCET, PAIL HOOK WITH WALL SUPPORT, VACUUM BREAKER SPOUT, 3/4" HOSE THREAD OUTLET INTEGRAL STOP ARMS. MOUNT ON WALL 36" A.F.F.
SH	1/2"	1/2"	2"	N/A	CHICAGO FAUCETS MIXING VALVE MODEL# 2500-VOCCP, HOSE/HEAD/SLIDE BAR CHICAGO FAUCETS MODEL#153CR20035, VACUUM BREAKER/WALL SPOUT CHICAGO FAUCETS MODEL#778-9KJKCP. WHICH INCLUDES THE FOLLOWING: A TEMPSHIELD MIXING VALVE CAPABLE OF THERMOSTATIC & PRESSURE BALANCING INCLUDING INTEGRAL CHECK STOPS WITH A HAND HELD SHOWER USING A 69" METAL CLAD HOSE WITH 51" SLIDE BAR AND WALL SPOUT WITH VACUUM BREAKER. INSTALL IN ACCORDANCE TO ADA REQUIREMENTS.
SJ	N/A	N/A	N/A	N/A	OPW ENGINEERED SYSTEMS SWIVEL JOINT MODEL#3320-0201 2" BRONZE ONE-DIMENSIONAL SWIVEL JOINT, WITH BUNA-N-SEAL.
SK	1/2"	1/2"	1-1/2"	N/A	JUST MANUFACTURING, MODEL#DL-ADA-1933-A-GR, 18 GAUGE STAINLESS DOUBLE BOWL KITCHEN SINK, DIMENSION 33" X 19" WITH CENTER DRAINS. CHICAGO FAUCETS # 201A-GN8AE3-370CPR SINK FAUCET, WITH BRAIDED STAINLESS STEEL RISER HOSES. CONTRACTOR SHALL PROVIDE AND INSTALL ADA-OFFSET SINK STAINLESS STRAINER.
SK-B	1/2"	1/2"	1-1/2"	N/A	JUST MANUFACTURING, MODEL#SL-ADA-1613-A-GR, 18 GAUGE STAINLESS SINGLE BOWL SINK, DIMENSION 13" X 16" WITH CENTER DRAINS. CHICAGO FAUCETS # 201A-GN8AE3-370CPR SINK FAUCET, WITH BRAIDED STAINLESS STEEL RISER HOSES. CONTRACTOR SHALL PROVIDE AND INSTALL ADA-OFFSET SINK STAINLESS STRAINER.
SSK	3/4"	3/4"	2"	N/A	AMERICAN STANDARD MODEL#7692.008, 22" X 18" ACID RESISTING, WHITE ENAMELED CAST IRON DRILLED BACK WALL HUNG SERVICE SINK, WITH 2" CAST IRON TRAP STANDARD MODEL#7798.020, RIM GUARD MODEL#8379.018, CHICAGO FAUCETS #897-RCF-369 ROUGH CHROME FINISH ADJUSTABLE SERVICE SINK FAUCET, PAIL HOOK WITH WALL SUPPORT, VACUUM BREAKER SPOUT, 3/4" HOSE THREAD OUTLET INTEGRAL STOP ARMS.
TP	1/2"	N/A	N/A	N/A	WADE MODEL#2400S, SINGLE DISTRIBUTION 1/2" TRAP PRIMER VALVE WITH VACUUM BREAKER. 1/2" SWEAT CONNECTIONS. ALL BRONZE BODY, NONLIMING INTERNAL OPERATING ASSEMBLY WITH A GASKETED BRONZE COVER OR APPROVED EQUAL. INSTALL PER MANUFACTURERS RECOMMENDATIONS.
TP-4	1/2"	N/A	N/A	N/A	WADE MODEL#2400MF, SINGLE DISTRIBUTION 1/2" TRAP PRIMER VALVE WITH VACUUM BREAKER INCLUDING OPTIONAL DISTRIBUTION UNIT WITH FOUR 3/8" NPT FEMALE CONNECTIONS. ALL BRONZE BODY, NONLIMING INTERNAL OPERATING ASSEMBLY WITH A GASKETED BRONZE COVER OR APPROVED EQUAL. INSTALL PER MANUFACTURERS RECOMMENDATIONS.
UR-A (ADA)	3/4"	N/A	2"	N/A	AMERICAN STANDARD MODEL#6501.010 "WASHBROOK 1.0 GPF, BARRIER FREE WHITE VITREOUS CHINA SIPHON JET URINAL WITH 3/4" TOP INLET SPUD WITH SLOAN ROYAL FLUSH VALVE MODEL 186-1. MOUNT URINAL WITH TOP OF RIM AT 17" ABOVE FINISH FLOOR. INSTALL URNINAL ON IN-WALL UNIVERSAL CARRIER WADE MODEL#400 SERIES. INSTALL PER MANUFACTURERS' RECOMMENDATIONS.
VB	N/A	N/A	N/A	N/A	ROUGH BRASS FINISH ATMOSPHERIC VACUUM BREAKER MANUFACTURED BY WATTS MODEL #800M4QT, 2" N.P.T. WITH REPLACEABLE SEATS.
WB	1/2"	N/A	N/A	N/A	IPS CORPORATION MODEL#82088, RECESSED ICE MAKER BOX WITH FACTORY INSTALLED VALVE 1/2" SWEAT CONNECTION.
WC (ADA)	1"	N/A	4"	2"	AMERICAN STANDARD MODEL#2257.103, "AFWALL ELONGATED SIPHON JET ACTION FLUSH VALVE TOILET 1.6 GPF, WHITE VITREOUS CHINA WALL HUNG, 1-1/2" BRASS TOP SPUD. SLOAN ROYAL #111 FLUSH VALVE. REFER TO ARCHITECTURAL FOR MOUNTING HEIGHT. BENEKE #521HPSS ELONGATED WHITE OPEN FRONT SEAT WITHOUT LID. INSTALL TOILET ON NO-HUB SINGLE AND DOUBLE FIXED OFFSET VERTICAL CARRIER WADE MODEL#371SERIES. INSTALL CARRIER AND TOILET PER MANUFACTURERS' RECOMMENDATIONS.

AIR COMPRESSOR SCHEDULE

MARK	MANUFACTURER, MODEL/SIZE	TANK SIZE (GALLONS)	TANK CONFIGURATION	MAX. HP	CAPACITY (CFM) @175 PSI	RPM	OUTLET SIZE	VOLT/HZ/PH	No. STAGES	MAX. PSI RATING	RATED FLOW SCFM	FILTRATION RATING (MICRONS)
COMP	INGERSOLL-RAND MODEL# 2545N7.5FP	80	VERTICAL	7.5	27.0	825	3/4" NPT	208/60/3	2	175	N/A	N/A
REG/GAUGE	INGERSOLL-RAND MODEL# R27241-600, WITH GAUGE	N/A	N/A	N/A	N/A	N/A	1/2" NPT	N/A	N/A	200	150	N/A
SEP	INGERSOLL-RAND MODEL# PS-060	1	N/A	N/A	N/A	N/A	3/4" NPT	N/A	N/A	N/A	60	N/A
P-FILTER	INGERSOLL-RAND MODEL# GP-123	N/A	N/A	N/A	N/A	N/A	3/4" NPT	N/A	N/A	N/A	123@100 PSI	1
A-FILTER	INGERSOLL-RAND MODEL# HE-123	N/A	N/A	N/A	N/A	N/A	3/4" NPT	N/A	N/A	N/A	123@100 PSI	0.01

REMARKS:

1. BOND COPPER COMPRESSED AIR PIPING WITH No. 8 AMERICAN WIRE GAUGE WITH COPPER PIPE CLAMPS TO NEAREST ABOVE SLAB DOMESTIC WATER PIPING.
2. AIR COMPRESSOR SHALL INCLUDE A FACTORY MOUNTED MOTOR STARTER, ADJUSTABLE PRESSURE SWITCH, CENTRIFUGAL UNLOADER AND AUTOMATIC RECIEVER TANK DRAIN.
3. AIR COMPPRESSOR PUMP SHALL BE 100% CAST IRON RATED FOR 15,000 HOURS.
4. START UP KIT SHALL BE INSTALLED AND PROVIDED GIVING THE CAPABILITY OF MAINTENANCE FOR ONE YEAR.
5. AIR COMPRESSOR SHALL HAVE A TWO YEAR PUMP WARRANTY AND FIVE YEAR RECIEVER TANK WARRANTY.
6. AUTO DRAIN RECIEVER TANK DRAIN VALVE AND AUTO DRAIN COMPRESSED AIR FILTERS SHALL DRAIN TO OIL/WATER SEPARATOR.
7. RIGID MOUNT OIL/WATER SEPARATOR ON GALVANIZED METAL CHAIR. OIL/WATER SEPARATOR DRAIN SHALL BE 18 INCHES ABOVE FINISHED FLOOR.
8. COMPRESSED AIR PIPING SHALL BE 3/4" TYPE "K" COPPER.
9. PROVIDE ONE SPARE REPLACEABLE FILTER ELEMENT WITH EACH COMPRESSED AIR FILTER.

ELECTRIC HOT WATER HEATER SCHEDULE

MARK	MANUFACTURER, MODEL/SIZE	GALLON CAPACITY	GPH RECOVERY @90° RISE	ELEMENT WATTAGE	FULL LOAD AMPERAGE	VOLT/HZ/PH	JACKET DIAMETER	TOTAL HEIGHT
EWH-65	MANUFACTURED BY AMERICAN MODEL#E62-65H-045DV INCLUDES METAL CHAIR MANUFACTURED BY WATTS, MODEL#AS-26	66	20.7	4,500	21.6	208/60/1	22"	59.25"
EWH-30	MANUFACTURED BY AMERICAN MODEL#E62-30H-045DV INCLUDES METAL CHAIR MANUFACTURED BY WATTS, MODEL#AS-20	30	20.7	4,500	21.6	208/60/1	16"	46"

REMARKS:

1. WATER HEATERS SHALL BE UL 174 LISTED AND MEET OR EXCEED ASHRAE 90.1-2001.
2. ROUTE T&P RELIEF VALVE PIPING AS INDICATED IN PLANS.
3. PROVIDE AND INSTALL WATER HEATER DRAIN PAN. ROUTE DRAIN PIPING FOR DRAIN PAN AS INDICATED IN PLANS.
4. ALL DRAINS SHALL BE SHALL BE HARDDRAWN TYPE "K" COPPER.
5. PROVIDE AND INSTALL DRAIN PAN WITH DRAIN AND WATER HEATER GALVANIZED METAL CHAIR FOR EACH WATER HEATER, UNLESS NOTED OTHERWISE.
6. ALL HOT WATER HEATERS SHALL COME WITH A 6 YEAR LIMITED TANK AND PARTS WARRANTY.
7. INSTALL DIELECTRIC UNIONS AND HEAT TRAP CHECK VALVES ON HOT AND COLD WATER HOT WATER HEATER CONNECTIONS.
8. BOND HOT AND COLD WATER PIPING WITH No. 8 AMERICAN WIRE GAUGE WITH COPPER PIPE CLAMPS TO MAINTAIN GROUNDING FOR HOT WATER PIPING.
9. EACH ELECTRIC HOT WATER HEATER SHALL INCLUDE THE FOLLOWING: INTERNAL ANODE ROD, COLD WATER DIP TUBE WITH TOP WATER CONNECTIONS, AND BUILT IN ELECTRIC JUNCTION BOX READY FOR 3/4" CONDUIT CONNECTION.

WATER PURIFICATION AND RECYCLING SYSTEM

SEPARATOR SYSTEM COMPONENTS:	RS-1
A	MODEL CL-30D, SOLIDS SEPARATOR
B	165 GALLON POLYETHYLENE STORAGE TANK
C	MODEL CLB-603A, RECYCLING UNIT
D	1000 GALLON POLYETHYLENE STORAGE TANK
E	PRESSURE WASHER (SEE SPECIFICATIONS)
F	(NOT USED)
G	(NOT USED)
X1	OIL SKIMMING BUCKET
X2	PRESSURE TANK
X3	(NOT USED)
X4	MIN 9 CFM, 3 HP VERTICAL AIR COMPRESSOR
X5	SUMP PUMP
MINIMUM SYSTEM CAPACITY (GPM)	5.0
FUEL SOURCE (E AND G)	DIESEL
POWER REQUIREMENTS:	
# 208/240 VOLT AC, 1ø CIRCUITS	4
# 20A, 120 VOLT AC, 1ø CIRCUITS	1
TYPE OF WATER PURIFICATION	BIOREMEDIATION
MANUFACTURER	WATER MAZE WATER TREATMENT SYSTEMS

REMARKS:

1. THE ABOVE SCHEDULED CLOSED LOOP RECYCLE SYSTEM SHALL BE COMPLETELY SELF CONTAINED.
2. THE COMPLETE SYSTEM SHALL REQUIRE SINGLE PHASE, 120 OR 208 VOLT AC POWER, TO A CONTROL PANEL(S) INSTALLED ON THE SKID BY THE MANUFACTURER.
3. THE INSTALLED SYSTEM SHALL INCLUDE ALL PUMPS AND PIPING NECESSARY FOR TRANSFERING WATER FROM THE WASHBAY SUMP TO THE RS-1 SYSTEM, BETWEEN COMPONENTS OF THE SYSTEM, AND FOR THE SUPPLY OF RECYCLED WATER TO THE PRESSURE WASHER. FIELD PIPING SHALL BE INSTALLED USING SCHEDULE 80 PVC.
4. EACH COMPONENT SHALL INCLUDE COMPLETE CONTROLS AND WIRING FOR THE INTEGRATED OPERATION OF THE COMPLETE SYSTEM.
5. THE COMPLETE SYSTEM SHALL INCLUDE A PRESSURE WASHER. REFER TO SPECIFICATIONS.
6. UNIT SHALL INCLUDE THE ABILITY TO REMOVE EMULSIFIERS FROM THE WATER.
7. THE RECYCLED WATER SHALL BE FREE OF OIL TO A MAXIMUM CONCENTRATION OF 500 PPM. THE RECYCLED WATER SHALL HAVE A MAXIMUM CONCENTRATION OF SUSPENDED SOLIDS OF 100 PPM.
8. COMPLETE SYSTEM SHALL BE INSTALLED BY MANUFACTURER TRAINED AND CERTIFIED PERSONNEL TO MANUFACTURER'S SPECIFICATIONS AND RECOMMENDATIONS.
9. REFER TO SPECIFICATIONS FOR ADDITIONAL AND SPECIFIC REQUIREMENTS, INCLUDING TRAINING OF OWNER'S EMPLOYEES.
10. IF A SUBSTITUTION FOR THE SCHEDULED AND SPECIFIED SYSTEM IS ACCEPTED, THE CONTRACTOR SHALL BE RESPONSIBLE TO ASSURE THAT THE SYSTEM CONFIGURATION FITS WITHIN THE AVAILABLE SPACE AND THAT PIPING, CONTROL AND POWER REQUIREMENTS SPECIFIC TO THAT SYSTEM ARE ACCOMMODATED.
11. INSTALL AN INTAKE SILENCER ON THE AIR COMPRESSOR.

PLUMBING SCHEDULES

NOTE: THIS DRAWING WAS CREATED FOR PRODUCTION ON 22" x 34" SHEET SIZE. DO NOT SCALE PRINTS.

Texas Department of Transportation
125 E. 11th Street
Austin, Texas 78701-2483
(512) 416-3048
Copyright © 2005 Texas Department of Transportation

THIS DOCUMENT IS RELEASED FOR THE PURPOSE OF INFORMATION ONLY
NOT FOR REGULATORY APPROVAL, PERMITTING, OR CONSTRUCTION.

WACO AREA ENGINEER AND MAINTENANCE FACILITY
WACO, MCLENNAN COUNTY
WACO DISTRICT

Revisions

Drawn by: KCR
Project No. CBC4704-00672
Date 05.21.2007
Sheet No. P4.1
of 9P sheets

CADFILE: T:\MNTF\MD02F\TWCBC4704-00-837\02-77-470400837\Acad\prototypical pdfs\waco\Acad\MEP\PLMB\P4_1.dwg Plotted: Fri. Aug. 07, 2009 @ 1:42 PM By: MBAZAN

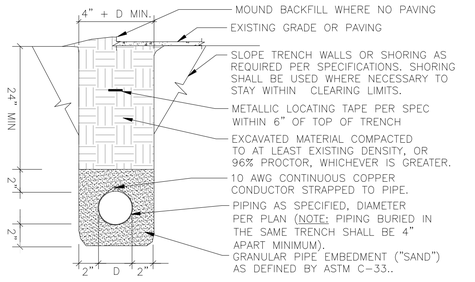

1 SEWER PIPING TRENCH
SCALE: NOT TO SCALE

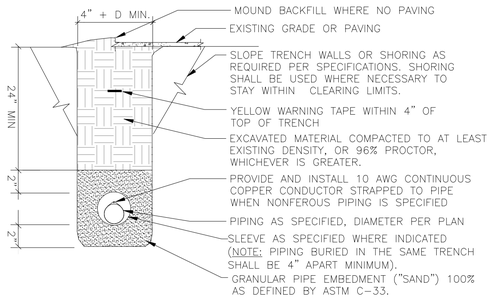

2 GAS PIPING TRENCH
SCALE: NOT TO SCALE

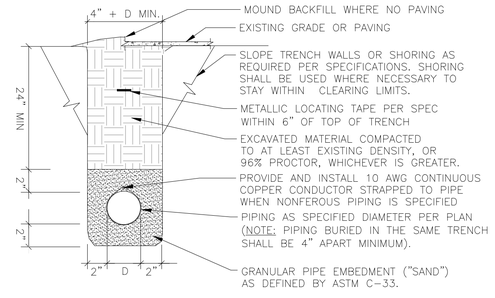

3 WATER PIPING TRENCH
SCALE: NOT TO SCALE

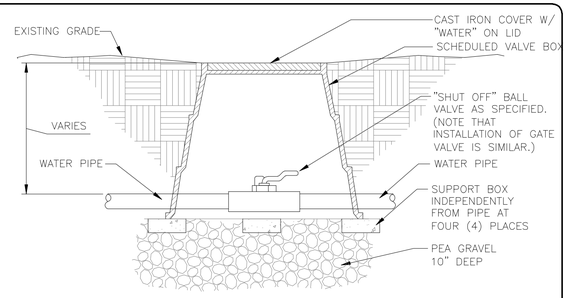

4 VALVE BOX & BALL VALVE IN SOIL
SCALE: NOT TO SCALE

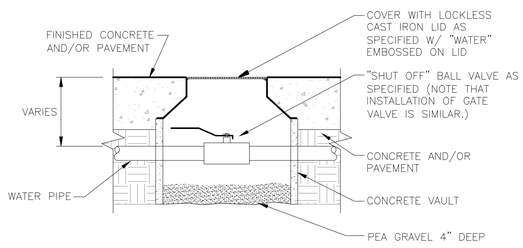

5 VALVE BOX & BALL VALVE IN CONCRETE
SCALE: NOT TO SCALE

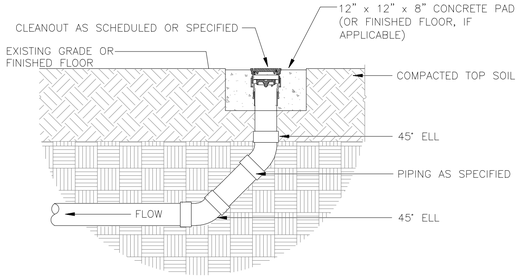

6 END OF LINE CLEAN OUT
SCALE: NOT TO SCALE

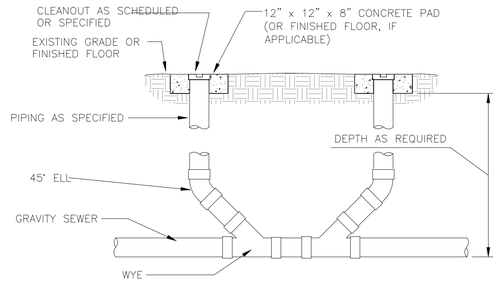

7 TWO WAY CLEAN OUT
SCALE: NOT TO SCALE

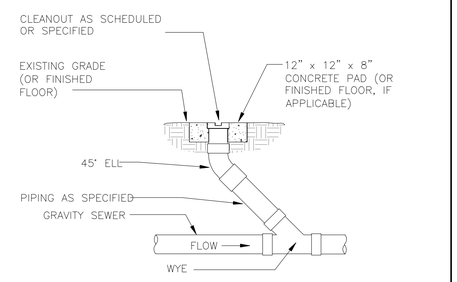

8 ONE WAY CLEAN OUT
SCALE: NOT TO SCALE

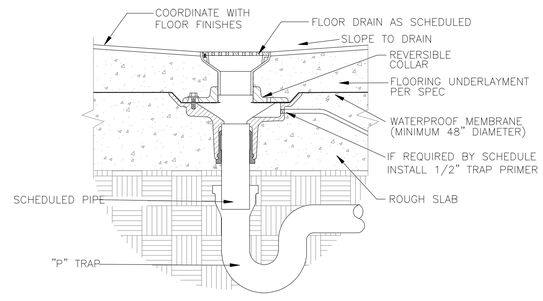

9 FLOOR DRAIN WITH TRAP PRIMER
SCALE: NOT TO SCALE

10 DETAIL NOT USED
SCALE: NOT TO SCALE

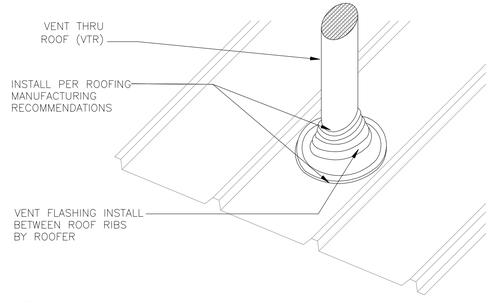

11 VENT THRU ROOF (VTR)
SCALE: NOT TO SCALE

12 DETAIL NOT USED
SCALE: NOT TO SCALE

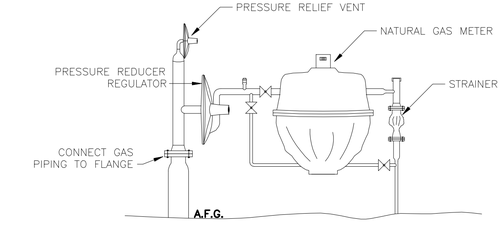

13 NATURAL GAS METER
SCALE: NOT TO SCALE

14 DETAIL NOT USED
SCALE: NOT TO SCALE

15 DETAIL NOT USED
SCALE: NOT TO SCALE

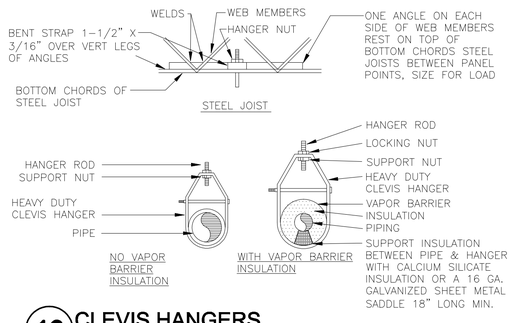

16 CLEVIS HANGERS
SCALE: NOT TO SCALE

PLUMBING DETAILS - 1

NOTE: THIS DRAWING WAS CREATED FOR PRODUCTION ON 22" x 34" SHEET SIZE. DO NOT SCALE PRINTS.

Texas Department of Transportation
125 E. 11th Street
Austin, Texas 78701-2483
(512) 416-3000

Copyright © 2005 Texas Department of Transportation

THIS DOCUMENT IS RELEASED FOR THE PURPOSE OF
INFORMATION ONLY
NOT FOR REGULATORY APPROVAL, PERMITTING, OR CONSTRUCTION.

WACO AREA ENGINEER AND MAINTENANCE FACILITY
WACO, MCLENNAN COUNTY
WACO DISTRICT

Revisions

Drawn by: KCR
Project No. CBC4704-00672
Date 05.21.2007
Sheet No.

P5.1
of 9P sheets

CADFILE: T:\NITP\WD\GFTWC\SC4704-00-657\02-77-4704006577\Acad\sys\cts\sys\cts\sys\cts

1 DETAIL NOT USED
SCALE: NOT TO SCALE

2 DETAIL NOT USED
SCALE: NOT TO SCALE

3 DETAIL NOT USED
SCALE: NOT TO SCALE

4 DETAIL NOT USED
SCALE: NOT TO SCALE

5 DETAIL NOT USED
SCALE: NOT TO SCALE

6 WALL HUNG W.C. W/FIXED CARRIER
SCALE: NOT TO SCALE

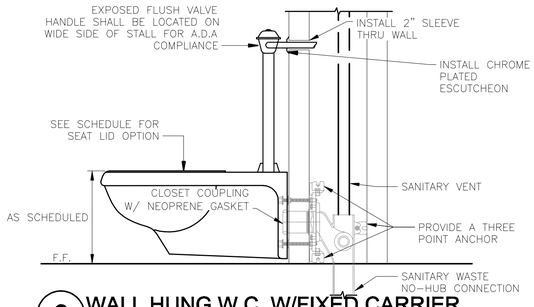

7 DETAIL NOT USED
SCALE: NOT TO SCALE

8 DETAIL NOT USED
SCALE: NOT TO SCALE

9 DETAIL NOT USED
SCALE: NOT TO SCALE

10 WATER HEATER ON CHAIR
SCALE: NOT TO SCALE

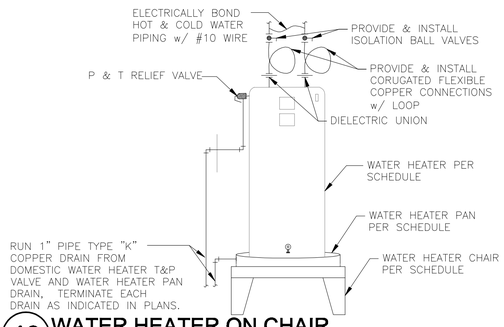

11 DETAIL NOT USED
SCALE: NOT TO SCALE

12 COMPRESSED AIR SYSTEM
SCALE: NOT TO SCALE

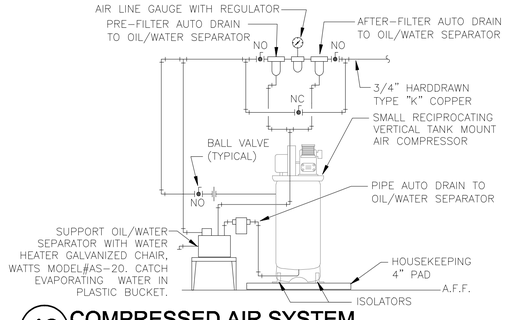

13 AIR DROP WITH QUICK DISCONNECT
SCALE: NOT TO SCALE

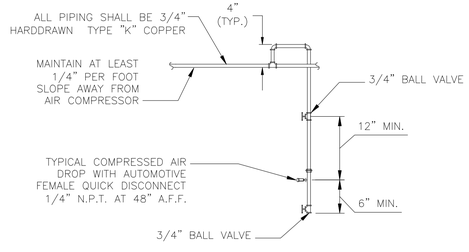

14 DETAIL NOT USED
SCALE: NOT TO SCALE

15 DETAIL NOT USED
SCALE: NOT TO SCALE

PLUMBING DETAILS - 2

NOTE: THIS DRAWING WAS CREATED FOR PRODUCTION ON 22" x 34" SHEET SIZE. DO NOT SCALE PRINTS.

Texas Department of Transportation
125 E. 11th Street
Austin, Texas 78701-2483
(512) 416-3000

Copyright © 2005 Texas Department of Transportation

THIS DOCUMENT IS RELEASED FOR THE PURPOSE OF
INFORMATION ONLY
NOT FOR REGULATORY
APPROVAL, PERMITTING,
OR CONSTRUCTION.

WACO AREA ENGINEER AND MAINTENANCE FACILITY
WACO, MCLENNAN COUNTY
WACO DISTRICT

Revisions

Drawn by: KCR
Project No. CBC4704-00672
Date 05.21.2007
Sheet No.

P5.2
of 9 P sheets

CADFILE: T:\MNTR\MOD2FTW\CBC4704-00-6571\02-77-47\400637\Acad\prototypical pdf\sheets\Acad\MEP\PLUMP\5_2.dwg Plotted: Fri, Aug. 07, 2009 @ 1:43 PM By: MBAZAN

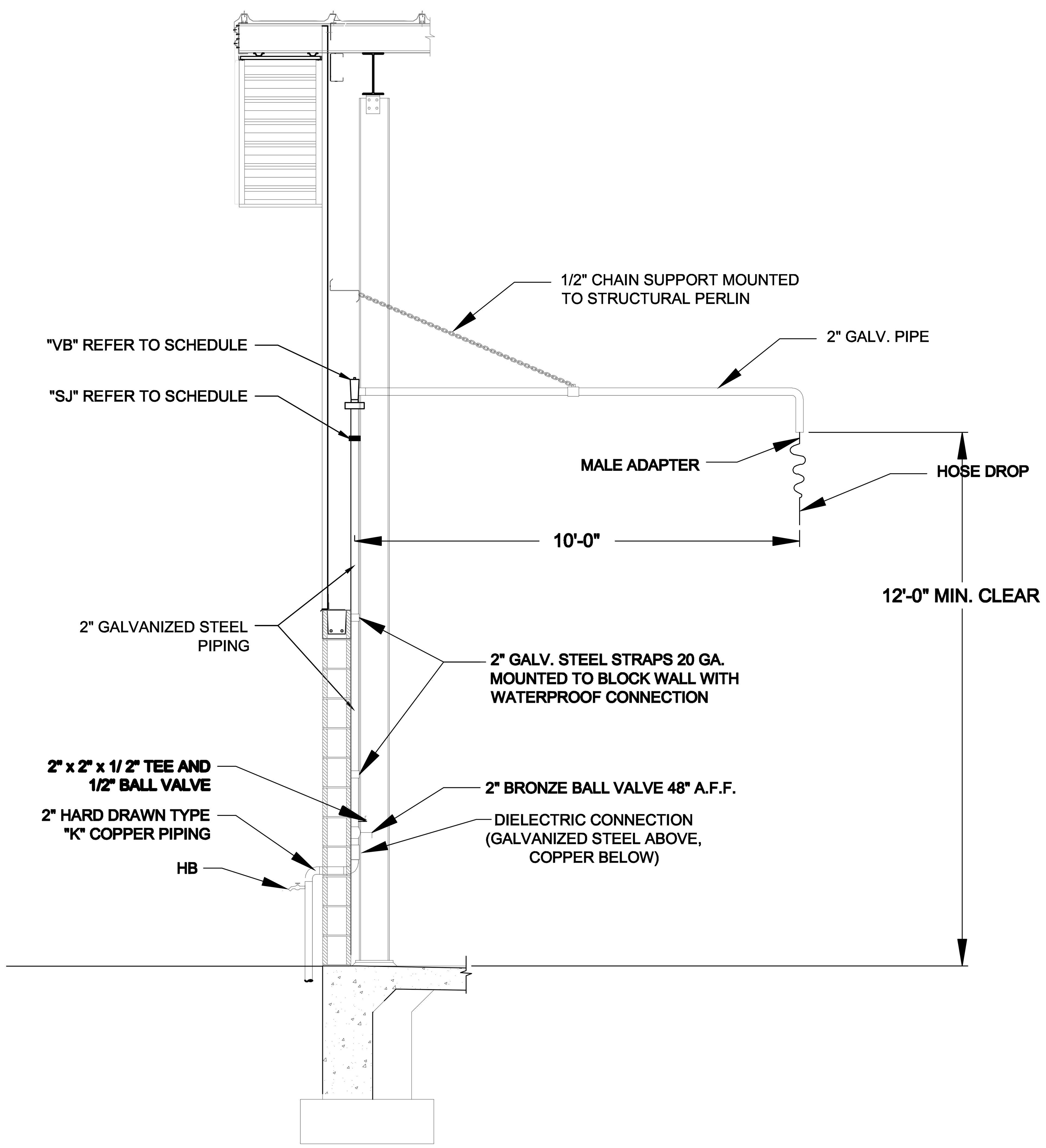

SIDE VIEW

1 TRUCK FILL STAND PIPE
SCALE: NOT TO SCALE

PLUMBING DETAILS - 3

NOTE: THIS DRAWING WAS CREATED FOR PRODUCTION ON 22" x 34" SHEET SIZE. DO NOT SCALE PRINTS.

Texas Department of Transportation

THIS DOCUMENT IS RELEASED FOR THE PURPOSE OF INFORMATION ONLY
NOT FOR REGULATORY APPROVAL, PERMITTING, OR CONSTRUCTION.

WACO AREA ENGINEER AND MAINTENANCE FACILITY
WACO, MCLENNAN COUNTY
WACO DISTRICT

Revisions

Drawn by: KCR
Project No. CBC4704-00672
Date 05.21.2007
Sheet No.

P5.3
of 9 P sheets

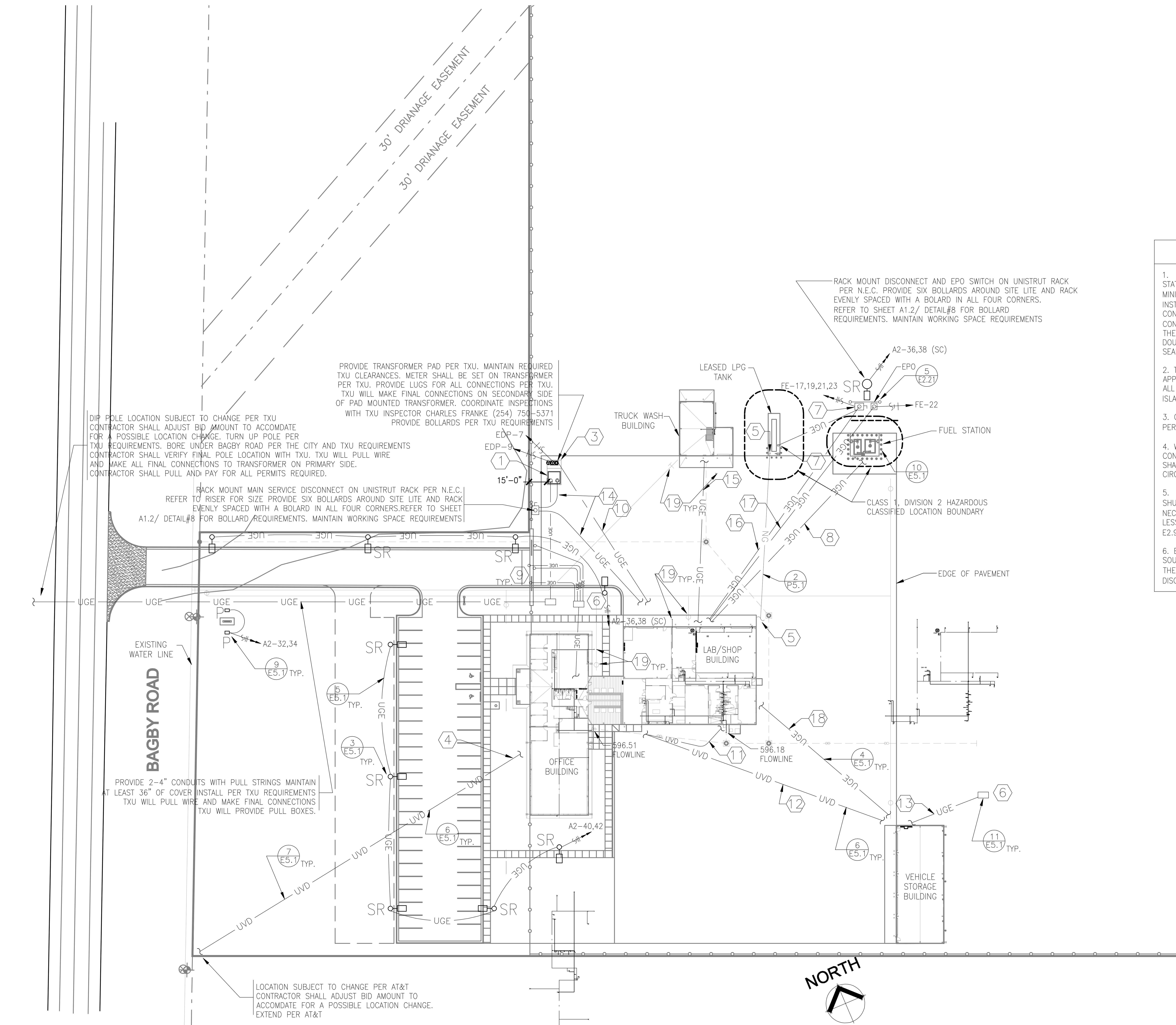

1 SITE PLAN
SCALE: 1" = 50'-0"

NOTE:

ROUTE ALL UNDERGROUND CONDUITS AND PIPES OUTSIDE OF DRIP EGDE OF TREES TO AVOID DAMAGE TO EXISTING TREES TO REMAIN

SEE E2.1 FOR GENERAL NOTES

LPG GENERAL NOTES

1. ALL BRANCH CIRCUIT WIRING FROM PANEL 'FE' TO THE LPG FUEL STATION SHALL BE TYPE THHN LPG RESISTANT SOLID WIRE A MINIMUM OF #12 WIRE IN 3/4"C., GASOLINE RESISTANT, AND INSTALLED IN RIGID GALVANIZED STEEL (R.G.S.). ALL BELOW GRADE CONDUIT SHALL BE RIGID NONMETALIC CONDUIT ENCASED IN RED CONCRETE 3" THICK . ALL LONG RADIUS 90° ELBOWS EMERGING FROM THE EARTH OR CONCRETE SHALL BE RIGID GALVANIZED STEEL AND DOUBLE WRAPPED. CONTRACTOR SHALL INSTALL EXPLOSION-PROOF SEALS IN RIGID GALVANIZED STEEL.

2. THE FIRST FITTING ABOVE THE SLAB SHALL BE AN N.E.C. APPROVED EXPLOSION-PROOF SEAL INSTALL AND PROVIDE SEALS IN ALL CONDUITS EMERGING AND LEAVING THE SLAB AT THE LPG FUEL ISLAND AND AT PANEL "FE", PER N.E.C. .

3. CONTRACTOR SHALL GROUND ABOVEGROUND LPG STORAGE TANKS PER N.E.C. SIMILAR TO E5.1/DETAIL#10.

4. WHERE EMERGENCY POWER-OFF SWITCH (EPO) IS REQUIRED TO CONTROL ADDITIONAL CIRCUIT BREAKERS, ALL SHUNT TRIP DEVICES SHALL BE CONNECTED IN PARALLEL UTILIZING THE SAME CONTROL CIRCUIT.

5. MOUNT EPO – EMERGENCY POWER OFF SWITCH TO ACTIVATE SHUNT TRIP CIRCUIT BREAKERS IN PANEL 'FE' ON PEDESTAL PER NEC 48" A.F.G. THE SWITCH SHALL BE LOCATED MORE THAN 20 BUT LESS THAN 100FT FROM LPG FUEL DISPENSOR. REFER TO E2.9.1/DETAIL#5 FOR FURTHER REQUIREMENTS.

6. EACH EPO SWITCH SHALL DISCONNECT SIMULTANEOUSLY FROM THE SOURCE OF SUPPLY, ALL CONDUCTORS OF THE CIRCUIT, INCLUDING THE GROUNDED CONDUCTOR PER N.E.C., ARTICLE 514-11(A) "CIRCUIT DISCONNECTS".

KEYED NOTES -

1. PAD MOUNTED TRANSFORMER PROVIDED BY TXU INSTALL PAD FOR PAD MOUNTED TRANSFORMER PER TXU REQUIREMENTS ADJUST EQUIPMENT PAD DIMENSIONS AND LOCATION PER TXU. CONTRACTOR SHALL COORDINATE WITH TXU THE CONTACT PERSON IS MIKE DARST 254-750-5293. TXU WILL PROVIDE THE TRANSFORMER, WIRE TO THE TRANSFORMER. THE CONTRACTOR SHALL PROVIDE THE CONDUIT AND PULL STRING, AND THE REQUIRED EQUIPMENT PAD FOR THE PAD MOUNTED TRANSFORMER AND GEN-SET PAD SHALL BE AT LEAST 6 INCHES LARGER THAN ACTUAL GEN-SET AND TRANSFORMER PROVIDED ON ALL SIDES. MAINTAIN TXU CLEARANCE REQUIREMENTS AND GEN-SET MANUFACTURER CLEARANCE REQUIREMENTS. PROVIDE A EXPANSION JOINT IN-BETWEEN THE GEN-SET AND TRANSFORMER REFER TO STRUCTURAL FOR FURTHER REQUIREMENTS. CONTRACTOR SHALL PAY TXU ALL ASSOCIATED FEES.

2. NOT USED.

3. ORIENTATION OF GEN SET SHALL BE SUCH THAT AIRFLOW IS NOT RESTRICTED FAN FAN SHALL NOT FACE FENCE.

4. CONTRACTOR SHALL COORDINATE WITH AT&T; THE CONTACT PERSON IS DAN DURAN 254-757-7112. AT&T WILL PROVIDE THE PEDESTAL AND 200 PAIR VOICE DATA CABLE TO THE TELECOMMUNICATION ROOM AND PROVIDE DEMARCATION IN THE TELECOMMUNICATION ROOM. CONTRACTOR SHALL PROVIDE 2-4" SCHEDULE 80 PVC CONDUITS WITH PULL WIRES, STUB UP IN TELECOMMUNICATION ROOM. VERIFY ACTUAL AND FINAL LOCATION OF TELEPHONE PEDESTAL WITH AT&T. REFER TO SHEET E2.4 FOR CONTINUATION. CONTRACTOR SHALL PAY AT&T ALL ASSOCIATED FEES.

5. CONTRACTOR SHALL COORDINATE LEASED LPG PROVIDER PROVIDE A SHUT OFF VALVE, PRESSURE REGULATOR AND CONNECTION AT THE LEASED LPG TANK EXTEND 2" UNDERGROUND GAS LINE FROM LPG TANK TO GAS TRANSITION RISER. REFER TO SHEET P2.2 FOR LOCATION OF BUILDING ENTRANCE AND FUEL GAS GENERAL NOTES.

6. PROVIDE AND INSTALL PULLBOX FLUSH-WITH-GRADE PULLBOX SIZED PER N.E.C.

7. PROVIDE AND INSTALL 30/2/NF/3R DISCONNECT AND MOUNTING RACK AND FUTURE CONNECTION TO PROPANE TANK. PROVIDE 1 -1" C. EMPTY CONDUIT W/ PULL STRING FROM DISCONNECT TO LPG SLAB STUB UP WITH EXPLOSION PROOF SEAL MARK AND CAP, DO NOT FILL SEAL FOR FUTURE USE.

8. MULTIPLE CONDUITS ROUTED FROM PULLBOXES IN ELECTRIC ROOM TO FUEL STORAGE TANKS FOR FUEL TANK LEVEL MONITORING & REMOTE LEAK SENSING ALARM. REFER TO SHEET E2.21 FOR NUMBER & SIZES OF CONDUITS AND WIRING.

9. 2-1"C W/ PULL STRINGS FROM BOTTOM OF PANEL-A2 TO FLUSH-WITH-GRADE PULLBOX. EXTEND 4-1"C TO GATE OPERATOR EQUIPMENT LOCATIONS PER SHEET A1.3/DETAIL#1. COORDINATE EXACT LOCATIONS WITH SECURITY GATE CONTRACTOR.

10. 2 - 1-1/ 2" C. AND 2-1" C. FOR MAIN POWER, BATTERY CHARGER POWER, CRANKCASE HEATER POWER, CONTROL AND ANNUNCIATOR WIRING TO GENERATOR.

11. 2 - 3" C. W/ 50 PAIR UNDERGROUND VOICE DATA CONDUIT FROM DATA/TELE. ROOM TO RADIO ROOM AND HUB ROOM. GROUND SHEILD AT BOTH ENDS. PROVIDE GROUND ROD IN BOTH ROOMS. GROUND ALL DEVICES IN BOTH ROOMS.

12. 1 - 2" C. W/ 25 PAIR UNDERGROUND VOICE DATA CONDUIT FROM DATA/TELE. ROOM TO VEHICLE STORAGE BLDG.

13. 1- 3" C. FROM TRANSFORMER DISCONNECT IN VECHICLE STORAGE TO PULLBOX FOR FUTURE ASPHALT TANKS.

14. 4- 4" C. FEEDER FROM MAIN SERVICE DISCONNECT PANEL.

15. 2- 2" C. FEEDER FROM PANEL MDP TO PANEL WB.

16. 1- 1" C. BRANCH CIRCUIT FROM PANEL FE TO LPG DISCONNECT.

17. 1- 1" C. BRANCH CIRCUIT FROM PANEL FE TO EPO SWITCH.

18. 2- 2" C. FEEDER FROM PANEL MDP TO PANEL C.

19. EXTEND BUILDING WATER SUPPLY FROM BUILDING TO CIVIL PROVIDED VALVE BOX. MAKE ALL FINAL CONNECTIONS.

Texas Department of Transportation

THIS DOCUMENT IS RELEASED FOR THE PURPOSE OF INFORMATION ONLY NOT FOR REGULATORY APPROVAL, PERMITTING, OR CONSTRUCTION.

WACO AREA ENGINEER AND MAINTENANCE FACILITY
WACO, MCLENNAN COUNTY WACO DISTRICT

Revisions

Drawn by: CON
Project No. CBC4704-00672
Date 05.21.2007
Sheet No.
PE1.1
of 1 PE sheets

ELECTRICAL & PLUMBING SITE PLAN

NOTE: THIS DRAWING WAS CREATED FOR PRODUCTION ON 22" x 34" SHEET SIZE. DO NOT SCALE PRINTS.

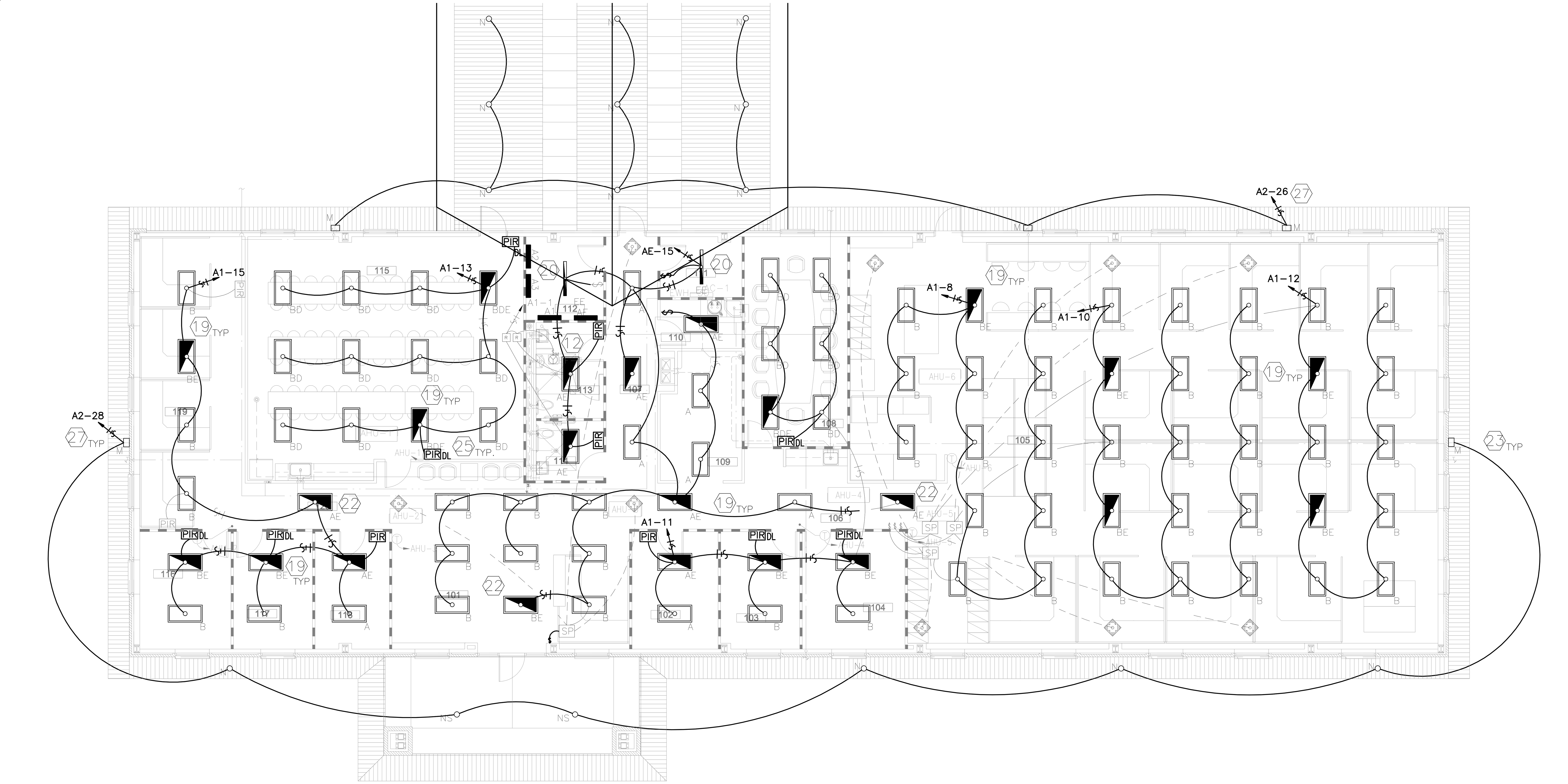

1 LIGHTING PLAN OFFICE BUILDING

SCALE: 1/8" = 1'-0"

0' 2' 4' 8' 16'

KEYED NOTES -

1. 2 – 4" PVC SCHED. 40. ONE W/200 PAIR VOICE DATA CABLE. SPARE W/2 PULL WIRES STUB UP IN TELECOMMUNICATION ROOM. COORDINATE WITH TELEPHONE COMPANY. REFER TO ELECTRICAL SITE PLAN FOR CONTINUATION.
2. CONDUIT SHALL BE COLLARED.
3. PROVIDE AND RIGID MOUNT BACKBOARD, BACKBOARD SHALL BE A FULL SHEET OF PLYWOOD, CDX CONSTRUCTION GRADE AND OR BETTER. INSTALL WITH SMOOTH SIDE EXPOSED, 8FT LENGTH IN THE HORIZONTAL POSITION, WITH TOP OF PLYWOOD 6" TO 8" BELOW THE CEILING. BACKBOARD SHALL BE CAPABLE OF SUPPORTING 200 LBS OF DEAD WEIGHT. PRIOR TO BACKBOARD INSTALLATION, CONTRACTOR SHALL PAINT ALL SURFACES WITH FIRE RETARDANT WHITE PAINT. ALL DAMAGED SURFACES AFTER INSTALLATION SHALL BE REPAINTED. EXPOSED SURFACE SHALL BE FREE OF SIGNIFICANT VOIDS, CRACKS, AND BLEMISHES.
4. NEWTON FIG. 3058 GROUND BUS BAR WITH 1 #6 ISOLATED, INSULATED GROUND IN A 3/4" CONDUIT TO BUILDING SERVICE ENTRANCE GROUND.
5. PROVIDE AND INSTALL DATA RACK REFER TO SPECIFICATIONS.
6. PROVIDE AND INSTALL FIBER CANISTERS, NEATLY MOUNT CANISTERS NEAR BOTTOM OF RACK AS CLOSE AS POSSIBLE.
7. PROVIDE AND INSTALL PUNCH BLOCKS AND WIRE MANAGEMENT SPOOLS BENEATH PUNCH BLOCKS. PUNCH BLOCKS SHALL BE COLOR CODED PER SPECIFICATION. MANUFACTURER COLORED PUNCH BLOCKS ARE ACCEPTABLE.
8. STUB OUT 2 – 4" CONDUIT WITH PULL STRING 5FT OUTSIDE BUILDING BREEWAY FOUNDATION CAP AND MARK LOCATION FOR FUTURE EXTENSION TO IRRIGATION SYSTEM CONTROLLER. FINAL LOCATION FOR WEATHER PROOF RECEPTACLE AND CONDUITS SHALL BE DETERMINED BY THE LANDSCAPE ARCHITECT.
9. SEE RISER AND SITE PLAN FOR NUMBER OF CONDUITS, WIRES, SIZES AND CONTINUATION
10. EMERGENCY GENERATOR ANNUNCIATOR PANEL. PROVIDE#12 THHN/THWN WIRE IN CONDUIT TO GENERATOR CONTROL PANEL. ADJUST QUANTITY AS REQUIRED FOR PANEL ACTUALLY SUPPLIED. SURFACE MOUNT ON TOP OF AUTOMATIC TRANSFER SWITCH.
11. FLUSH MOUNTED 4" X 4" J–BOX WITH BLANK COVER AND 1 " CONDUIT TO ABOVE CEILING FOR FUTURE SECURITY DEVICE. MOUNT AT 48" AFF. PROVIDE AND INSTALL MATCHING FLUSH RING PER SECURITY DEVICE REFER TO OWNER.
12. INTERLOCK EXHAUST FAN WITH THE MENS AND WOMENS LIGHT SWITCHES WITH ONE RELAY PER LIGHT SWITCH. EXHAUST FAN SHALL RUN IF ANY ONE OF THE LIGHT SWITCH IS IN THE "ON" POSITION.

CONTINUED-KEYED NOTES -

13. FLUSH MOUNTED J–BOX 18" A.F.F. WITH 1" CONDUIT TO ABOVE CEILING FOR RADIO CABLE TO RECEPTION AREA
14. COORDINATE WITH MECHANICAL, MECHANICAL SHALL SUPPLY ALL THERMOSTATS, ELECTRICAL SHALL INSTALL 120V SUPPLY THERMOSTATS FOR THE RADIANT HEATERS .
15. PROVIDE MATCHING PLUG. TURN OVER TO OWNER.
16. CONTRACTOR SHALL INSTALL ALL RECEPTACLES, SWITCHES, AND MOTOR SWITCHES IN EQUIPMENT SHOP FLUSH MOUNTED TO PLYWOOD COORDINATE DISCIPLINES.
17. CONTRACTOR SHALL VERIFY LOCATION OF POWER POLES (PP) WITH OWNER. REFER TO MODULAR FURNITURE WIRE STANDARD SHEET E2.4 INSTALL ONE STANDARD VOICE/DATA OUTLET/PER CUBICLE. VERIFY QUANTITY AND LOCATION OF FURNITURE WITH OWNER.
18. POWER IS PROVIDED TO INDOOR FROM OUTDOOR UNIT INSTALL PER MANUFACTURER INSTALLATION REQUIREMENTS.
19. PROVIDE CONTINUOUS POWER TO BATTERY PACK, SWITCH LIGHT ONLY.
20. COORDINATE LIGHT FIXTURES WITH TRADES. PROVIDE ALL NECESSARY HARDWARE TO SUSPEND LIGHT FIXTURES WITH UNISTRUT. MOUNT BOTTOM OF FIXTURES 8FT A.F.F.
21. COORDINATE LIGHT FIXTURES WITH TRADES. PROVIDE ALL NECESSARY HARDWARE TO SUSPEND LIGHT FIXTURES WITH MOUNTING HARDWARE AS REQUIRED. MOUNT BOTTOM OF FIXTURES 16FT A.F.F.
22. UNSWITCHED NIGHT LIGHT.
23. SEE ARCHITECTURAL EXTERIOR ELEVATIONS FOR MOUNTING HEIGHT OF TYPE "M" FIXTURES.
24. NOT USED.
25. PASSIVE INFRARED DUAL LEVEL SWITCHING. ONE SWITCH SWITCHES OUTSIDE LAMPS IN EACH FIXTURE. SECOND SWITCH SWITCHES INSIDE LAMPS IN EACH FIXTURE.
26. NOT USED.
27. ROUTED THROUGH LIGHTING CONTACTOR.

APPLIES TO ALL E-SHEETS

GENERAL NOTES

1. THE LOCATION OF ELECTRICAL ITEMS ON THE ELECTRICAL DRAWINGS ARE DIAGRAMMATIC AND ARE NOT INTENDED TO GIVE COMPLETE AND ACCURATE DETAILS IN REGARD TO LOCATION. EXACT LOCATION SHOULD BE DETERMINED BY ACTUAL MEASUREMENTS AT THE BUILDING, AND WILL IN ALL CASES BE SUBJECT TO THE APPROVAL OF THE ENGINEER. THE ENGINEER RESERVES THE RIGHT TO MAKE ANY REASONABLE CHANGES IN THE LOCATIONS INDICATED WITHOUT ADDITIONAL COST.
2. THE ELECTRICAL DISTRIBUTION SYSTEM SIZING IS BASED ON EQUIPMENT DATA FROM THE SPECIFIED SUPPLIER OR A TYPICAL SUPPLIER. THE CONTRACTOR IS FULLY RESPONSIBLE FOR PROVIDING THE CORRECTLY SIZED ELECTRICAL SYSTEM TO MATCH THE REQUIREMENTS OF THE NEW EQUIPMENT.
3. THE ELECTRICAL SYSTEM SHALL BE GROUNDED IN ACCORDANCE WITH ARTICLE 250 OF THE NATIONAL ELECTRICAL CODE. ALL ELECTRICAL SYSTEMS RECEPTACLES, CABINETS, JUNCTION BOXES, MOTOR FRAMES, MISCELLANEOUS EQUIPMENT, ETC. SHALL BE GROUNDED BY A GREEN–WIRE GROUND CONDUCTOR.
4. UNLESS OTHERWISE NOTED – ALL HOME RUNS SHALL BE 3 EACH #12 THHN/THWN, ¾" C.
5. THE MINIMUM CONDUIT SIZE FOR ELECTRICAL CIRCUITS SHALL BE ¾". THE MINIMUM CONDUIT SIZE FOR VOICE / DATA CIRCUITS SHALL BE 1".
6. ALL DUPLEX/QUAD OUTLETS SHALL BE MOUNTED AS INDICATED ON DRAWING, TO CENTER OF OUTLET. GROUND TERMINAL SHALL POINT DOWN. MOUNT 18" A.F.F. UNLESS OTHERWISE NOTED.
7. WHERE CALLED FOR, USE 2 OR 3 POLE BREAKERS. TYING SINGLE POLE BREAKERS TOGETHER TO CREATE A 2 OR 3 POLE BREAKER IS PROHIBITED.
8. ALL EXTERIOR ILLUMINATION FOR THE BUILDING AND ALL OF THE AREA SITE LIGHTING SHALL BE CONTROLED AS INDICATED ON RISER DIAGRAM.
9. CONTRACTOR IS RESPONSIBLE FOR COORDINATING WITH THE UTILITY COMPANY PRIOR TO BID TO ESTABLISH REQUIREMENTS FOR SERVICE AND TO IDENTIFY MATERIALS AND EQUIPMENT WHICH SHALL BE PROVIDED BY CONTRACTOR AND WHICH SHALL BE PROVIDED BY THE UTILITY COMPANY.
10. THE BIDDER SHALL VISIT THE SITE OF THE PROPOSED WORK AND SHALL FULLY INFORM HIMSELF REGARDING THE FACILITIES. NO ADDITIONAL COMPENSATION WILL BE ALLOWED FOR WORK OR MATERIALS OMITTED FROM BIDDER'S CONTRACT PROPOSAL DUE TO HIS FAILURE TO INFORM HIMSELF BY SUCH INVESTIGATION.
11. THE ELECTRICAL CONTRACTOR SHALL GUARANTEE AGAINST DEFECTS IN ANY OR ALL MATERIALS, EQUIPMENT, OR WORKMANSHIP COVERED BY THE ELECTRICAL SPECIFICATIONS, EXCEPT SUCH MATERIALS, EQUIPMENT, OR WORKMANSHIP FURNISHED BY OTHERS AND SHALL MAKE GOOD, REPAIR, OR REPLACE, AT HIS OWN EXPENSE, ANY DEFECTIVE WORK, MATERIAL OR PART WHICH MAY BECOME EVIDENT WITHIN A PERIOD OF ONE YEAR AFTER FINAL ACCEPTANCE OF THE WORK. NECESSARY SERVICE AND ADJUSTMENT DURING THE EARLY STAGES OF OPERATION AFTER OCCUPANCY SHALL BE PROVIDED BY THE CONTRACTOR WITHOUT ADDITIONAL COST TO THE OWNER.
12. ALL ELECTRICAL EQUIPMENT, CONDUIT, HANGERS, ECT. IN MECHANICAL ROOMS AND FENCED OUT AREAS CAN BE EXPOSED. HIDE ALL CONDUIT, HANGERS, EQUIPMENT FROM SIGHT OF THE GENERAL PUBLIC, NO EXCEPTIONS UNLESS PERMITTED BY ENGINEER IN WRITTING.
13. TXDOT EQUIPMENT REQUIREMENT;
    A. WHERE APPLICABLE, ALL LAMPS USED ON THIS PROJECT SHALL BE OF THE TOXIC CHARACTERISTIC LEACHATE PROCEDURE (TCLP) LOW MERCURY TYPE.
    B. WHERE APPLICABLE, ALL LAMPS SCHEDULED FOR REPLACEMENT, EITHER BY DEMOLITION OR MAINTENANCE, SHALL BE HELD AND DISPOSED OF IN ACCORDANCE WITH THE UNIVERSAL WASTE RULE.
14. CONTRACTOR SHALL ALLOW FOR COORDINATION MEASURES AND QUALIFIED TECHNICIAN MAN HOURS FOR LIGHT FIXTURE ALIGNMENT AND ADJUSTMENTS AS NECESSARY UNTIL THE OWNER IS SATISFIED.
15. INDEPENDENTLY SUPPORT ALL LIGHT FIXTURES MOUNTED IN CEILING GRID FROM ABOVE BUILDING STRUCTURE AT ALL FOUR CORNERS. ROUND FIXTURES SHALL BE SUPPORTED IN TWO PLACES.
16. SLEEVE ALL WALL PENETRATIONS WITH SLEEVE 2 PIPE SIZES LARGER THAN PENETRATING PIPE. SLEEVE AND PENETRATING PIPE SHALL BE CONSTRUCTED FROM THE SAME MATERIAL. MAINTAIN INSULATION THROUGH SLEEVES.
17. FIRE CAULK ALL PENETRATIONS WHERE ARCHITECTURAL PLANS CALL FOR FIRE RATED CONSTRUCTION WALLS. STOP INSULATION SHORT OF SLEEVE FILL ANNULAR SPACES WITH FIRE RATED CAULK.

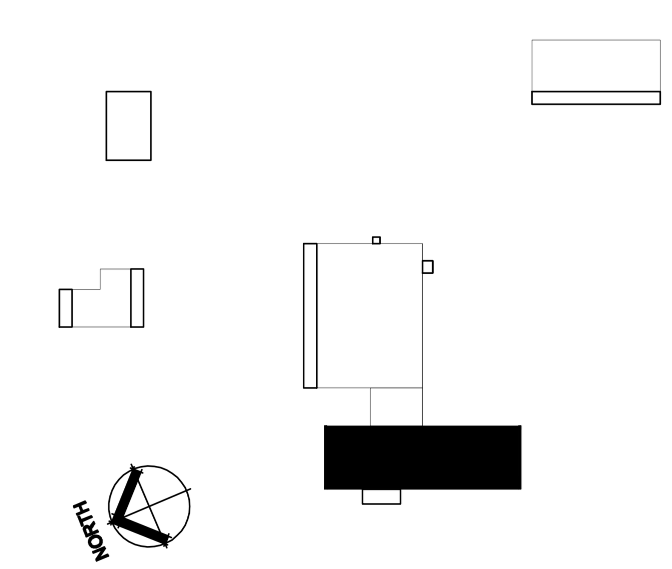

KEY PLAN

LIGHTING PLAN - OFFICE BUILDING

NOTE: THIS DRAWING WAS CREATED FOR PRODUCTION ON 22" x 34" SHEET SIZE. DO NOT SCALE PRINTS.

Texas Department of Transportation
125 E. 11th Street
Austin, Texas 78701-2483
(512) 416-3048
Copyright © 2005 Texas Department of Transportation

THIS DOCUMENT IS RELEASED FOR THE PURPOSE OF INFORMATION ONLY NOT FOR REGULATORY APPROVAL, PERMITTING, OR CONSTRUCTION.

WACO AREA ENGINEER AND MAINTENANCE FACILITY

WACO, MCLENNAN COUNTY WACO DISTRICT

Revisions

Drawn by: CON

Project No. CBC4704-00672

Date 05.21.2007

Sheet No.

E2.1

of 15 E sheets

CADFILE: T:\MNTFMD02FTW\CBC4704-00-657\02-77-470400657\Acad\prototypical pdfs\waco\Acad\MEP\ELEC\E2_1 and E2_4.dwg Plotted: Fri. Aug. 07, 2009 @ 1:18 PM By: MBAZAN

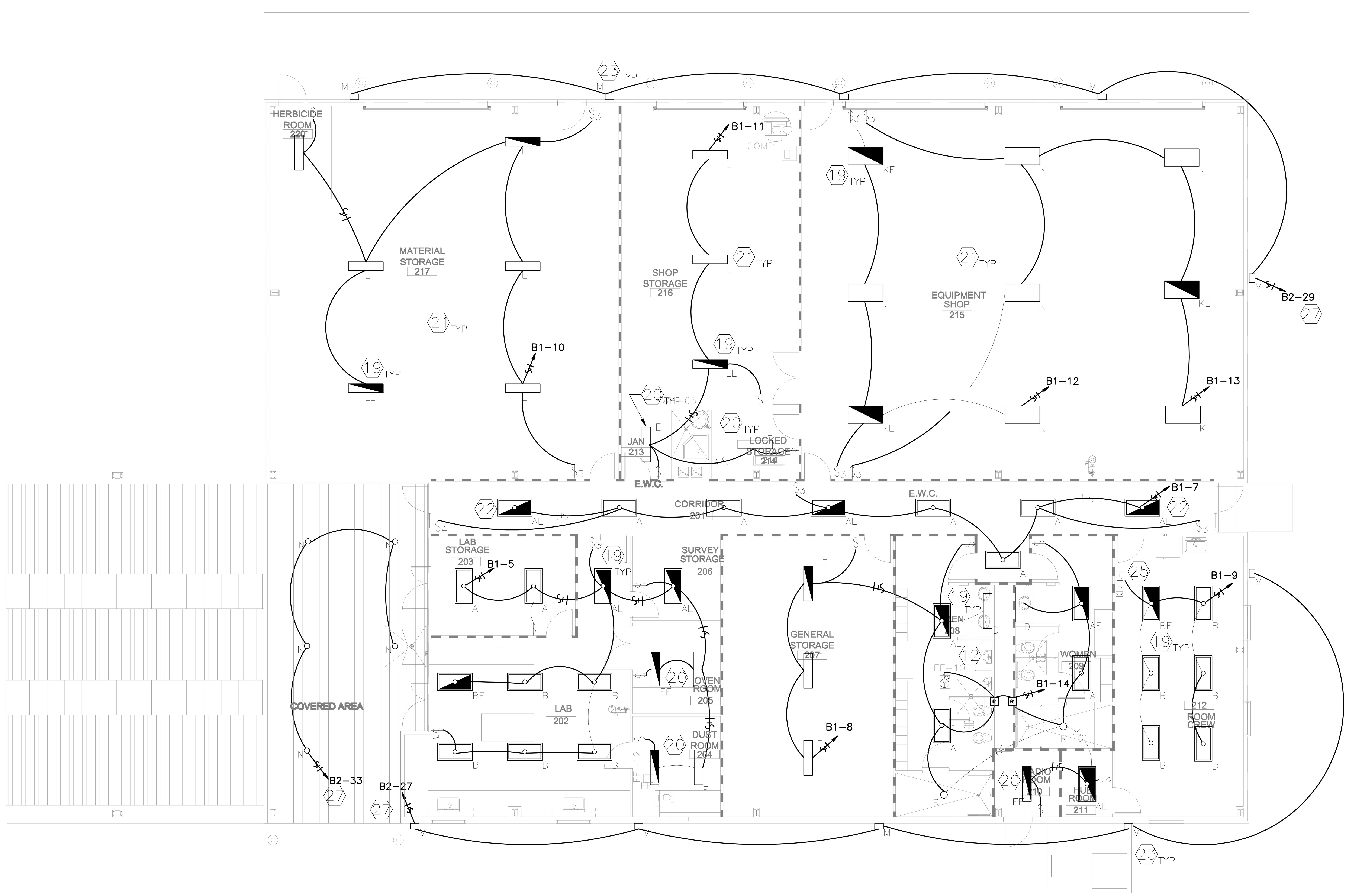

1 LIGHTING PLAN - LAB/SHOP BUILDING

SCALE: 1/8" = 1'-0"

0' 2' 4' 8' 16'

SEE E2.1 FOR GENERAL AND KEYED NOTES

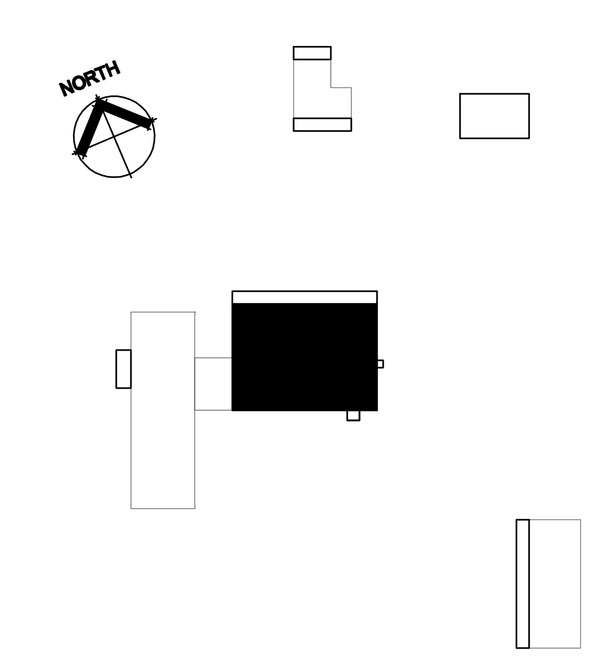

KEY PLAN

LIGHTING PLAN - LAB/SHOP BUILDING

NOTE: THIS DRAWING WAS CREATED FOR PRODUCTION ON 22" x 34" SHEET SIZE. DO NOT SCALE PRINTS.

Texas Department of Transportation
125 E. 11th Street
Austin, Texas 78701-2483
(512) 416-3048

Copyright © 2005 Texas Department of Transportation

THIS DOCUMENT IS RELEASED FOR THE PURPOSE OF INFORMATION ONLY
NOT FOR REGULATORY APPROVAL, PERMITTING, OR CONSTRUCTION.

WACO AREA ENGINEER AND MAINTENANCE FACILITY
WACO, MCLENNAN COUNTY
WACO DISTRICT

Revisions

Drawn by: CON
Project No. CBC4704-00672
Date 05.21.2007
Sheet No.

E2.2
of 15 E sheets

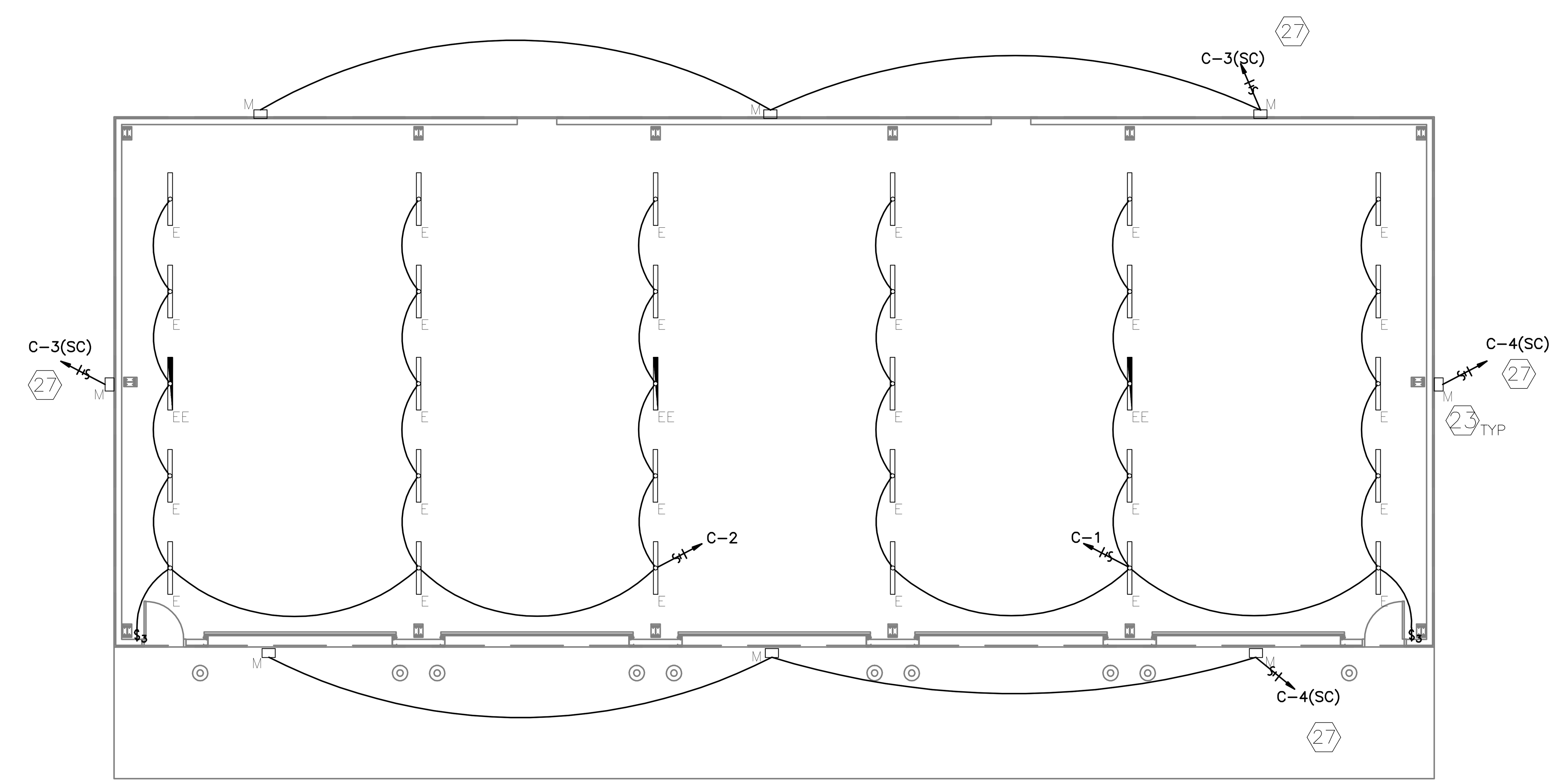

1 LIGHTING PLAN VEHICLE STORAGE BUILDING
SCALE: 1/8" = 1'-0"

0' 2' 4' 8' 16'

SEE E2.1 FOR GENERAL AND KEYED NOTES

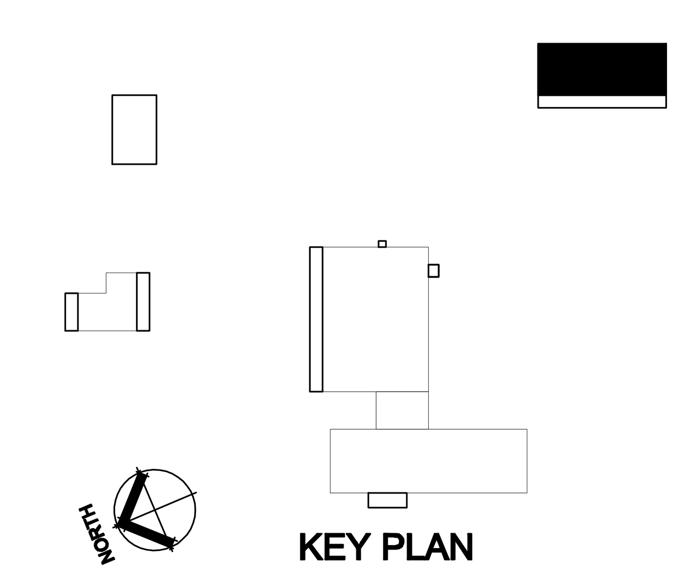

KEY PLAN

Texas Department of Transportation
125 E. 11th Street
Austin, Texas 78701-2483
(512) 416-2040
Copyright © 2005 Texas Department of Transportation

THIS DOCUMENT IS RELEASED FOR THE PURPOSE OF INFORMATION ONLY
NOT FOR REGULATORY APPROVAL, PERMITTING, OR CONSTRUCTION.

WACO AREA ENGINEER AND MAINTENANCE FACILITY
WACO, MCLENNAN COUNTY
WACO DISTRICT

Revisions

Drawn by: CON
Project No. CBC4704-00672
Date 05.21.2007
Sheet No.
E2.3
of 15 E sheets

LIGHTING PLAN - VEHICLE STORAGE BUILDING

NOTE: THIS DRAWING WAS CREATED FOR PRODUCTION ON 22" x 34" SHEET SIZE. DO NOT SCALE PRINTS.

CADFILE: T:\MNTFM\DX02FTW\CBC4704-00-857\02-77-47040057\Acad\prototypical pdr\waco\Acad\MEP\ELEC\E2_3.dwg Plotted: Fri, Aug. 07, 2009 @ 1:22 PM By: MBAZAN

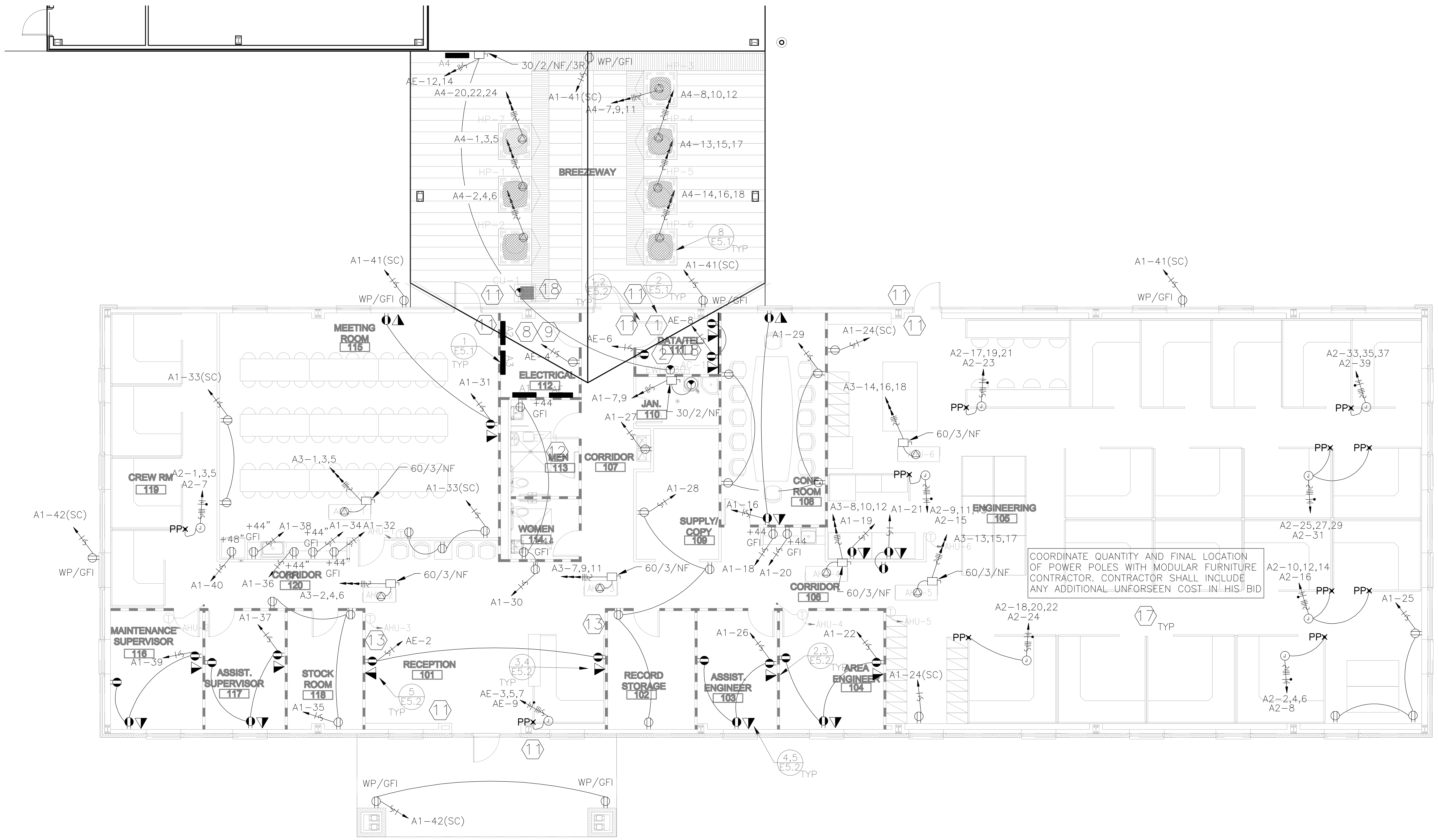

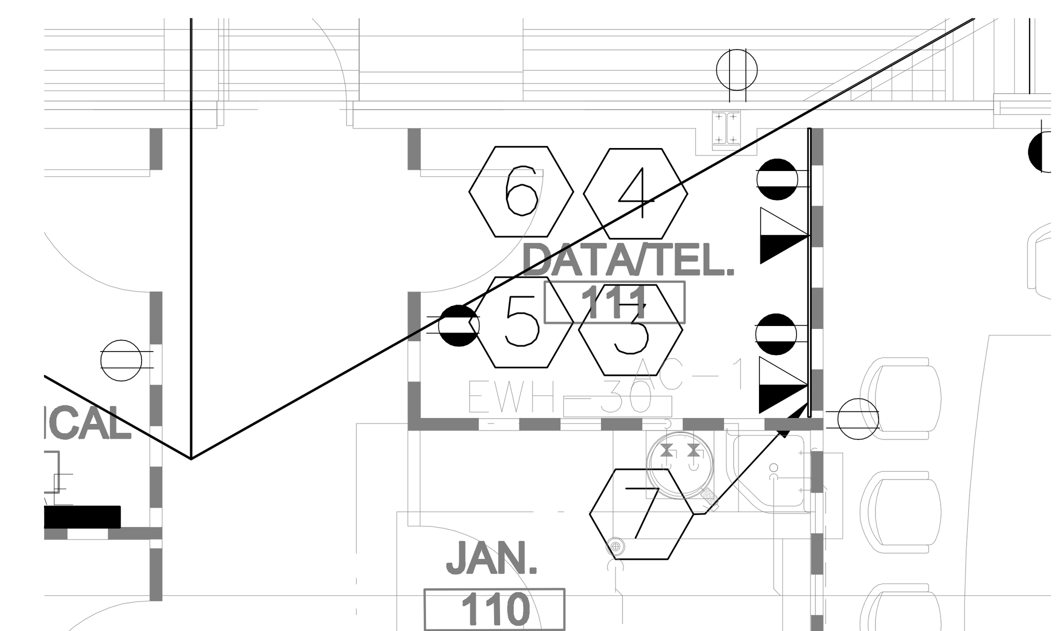

1 POWER PLAN OFFICE BUILDING
SCALE: 1/8" = 1'-0"

0' 2' 4' 8' 16'

MODULAR FURNITURE WIRE STANDARD				
MODULAR FURNITURE POWER (4 CIRCUIT 3+D, 8 WIRES)				
PHASE	SIZE	COLOR	INSULATION	FUNCTION
A	#12	RED	RED #12 AWG THWN/THHN	HOT 1
B	#12	BLACK	BLACK #12 AWG THWN/THHN	HOT 2
C	#12	BLUE	BLUE #12 AWG THWN/THHN	HOT 3
NEUT.	#10	WHITE	WHITE #10 AWG THWN/THHN	OVER-SIZED NEUTRAL
GND.	#12	GREEN	GREEN #12 AWG THWN/THHN	GROUND
A,B,OR C	#12	PINK	PINK #12 AWG THWN/THHN	HOT 4
NEUT.	#12	GREY	GREY #12 AWG THWN/THHN	NEUTRAL
GND.	#12	GREEN / YELLOW	GREEN AND YELLOW #12 AWG THWN/THHN	ISOLATED GROUND

NOTE: WIRE SIZES ARE MINIMUM. WHERE HOMERUNS EXCEED 100FT IN LENGHT #12 CONDUCTORS SHALL BECOME #10 AND #10 CONDUCTORS SHALL BECOME #8.

NOTE:
PROVIDE AN ENGRAVED, LAMINATED NAMEPLATE FOR EACH NEW OR EXISTING DISCONNECT, PANELBOARD, CIRCUIT BREAKER ENCLOSURE, TRANSFORMER, RECEPTACLE FACE PLATE OR OTHER ELECTRICAL ENCLOSURE. THIS NAMEPLATE SHALL STATE THE DEVICES NAME, VOLTAGE, & PHASE AND STATE THAT THE DEVICE IS FED FROM THE EMERGENCY DISTRIBUTION SYSTEM. THIS NAMEPLATE SHALL ALSO STATE WHERE THE DEVICE FEEDS FROM. FOR EXAMPLE FOR PANEL N-1H-E THE NAMEPLATE WOULD READ:

EMERGENCY PANEL N-1H-E
480 VOLT, 3-PHASE
FEEDS FROM EMERGENCY PANEL ME

SEE E2.1 FOR GENERAL AND KEYED NOTES

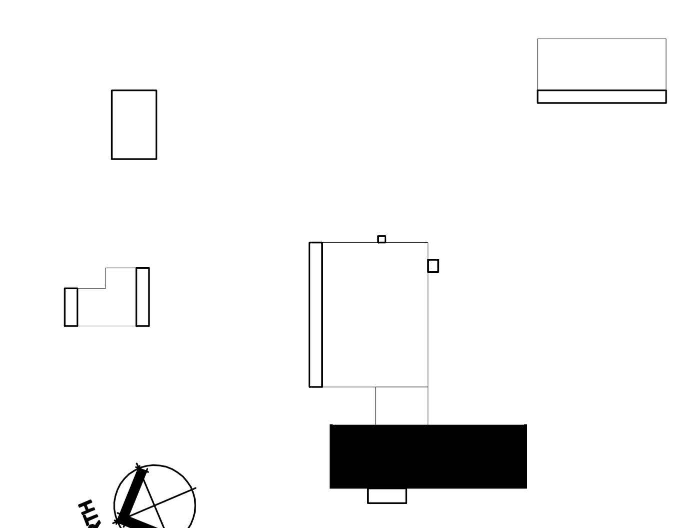

KEY PLAN

POWER PLAN - OFFICE BUILDING

NOTE: THIS DRAWING WAS CREATED FOR PRODUCTION ON 22" x 34" SHEET SIZE. DO NOT SCALE PRINTS.

Texas Department of Transportation
125 E. 11th Street
Austin, Texas 78701-2483
(512) 416-3048

Copyright © 2005 Texas Department of Transportation

THIS DOCUMENT IS RELEASED FOR THE PURPOSE OF INFORMATION ONLY
NOT FOR REGULATORY APPROVAL, PERMITTING, OR CONSTRUCTION.

WACO AREA ENGINEER AND MAINTENANCE FACILITY
WACO, MCLENNAN COUNTY
WACO DISTRICT

Revisions

Drawn by: CON
Project No. CBC4704-00672
Date 05.21.2007
Sheet No.

E2.4
of 15 E sheets

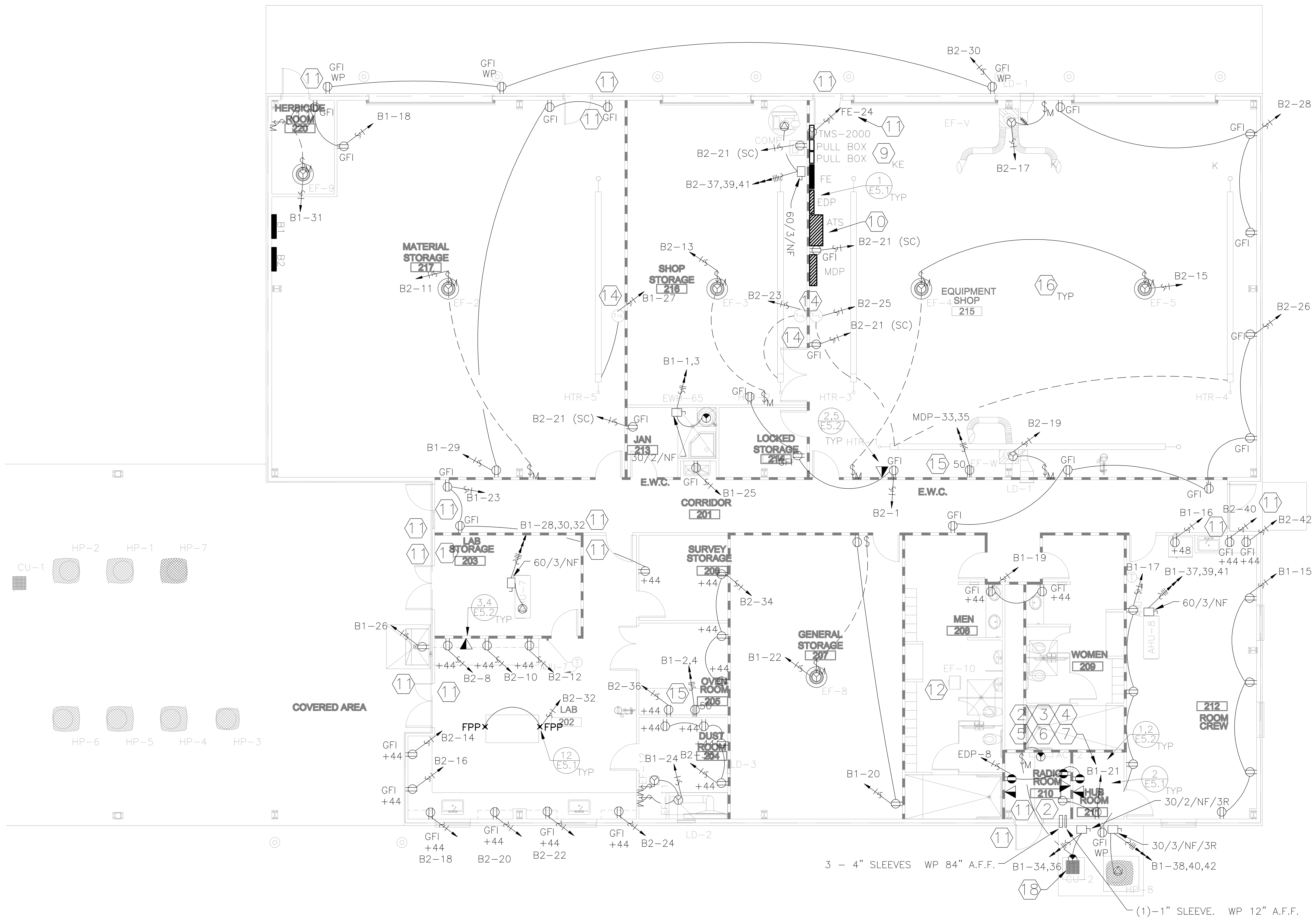

1 POWER PLAN - LAB/SHOP BUILDING

SCALE: 1/8" = 1'-0"

0' 2' 4' 8' 16'

SEE E2.1 FOR GENERAL AND KEYED NOTES

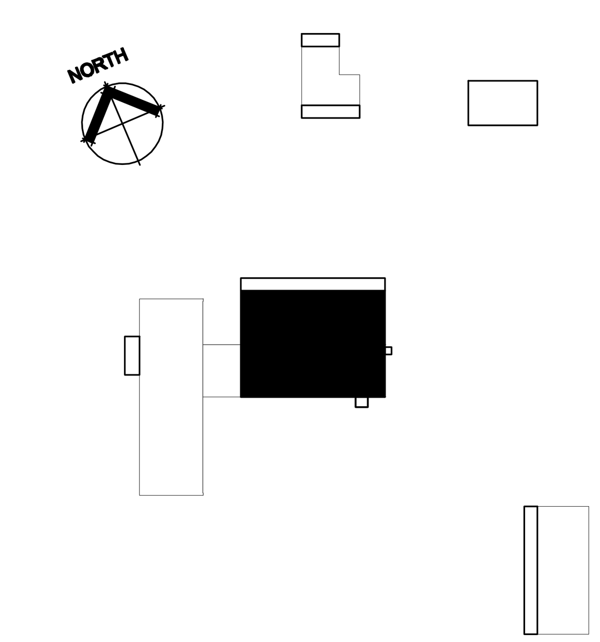

KEY PLAN

CADFILE: T:\MNTFM\D02FTWCB\C4704-00-00672-77-470400672\cad\prototypical pdf\waco\Acad\MEP\ELEC\E2_2 and E2_5and2_6.dwg Plotted: Fri, Aug. 07, 2009 @ 1:20 PM By: MBAZAN

Texas Department of Transportation
125 E. 11th Street
Austin, Texas 78701-2483
(512) 416-3048

Copyright © 2005 Texas Department of Transportation

THIS DOCUMENT IS RELEASED FOR THE PURPOSE OF INFORMATION ONLY

NOT FOR REGULATORY APPROVAL, PERMITTING, OR CONSTRUCTION.

WACO AREA ENGINEER AND MAINTENANCE FACILITY

WACO, MCLENNAN COUNTY WACO DISTRICT

Revisions

Drawn by: CON

Project No. CBC4704-00672

Date 05.21.2007

Sheet No.

E2.5

of 15 E sheets

POWER PLAN - LAB/SHOP BUILDING

NOTE: THIS DRAWING WAS CREATED FOR PRODUCTION ON 22" x 34" SHEET SIZE. DO NOT SCALE PRINTS.

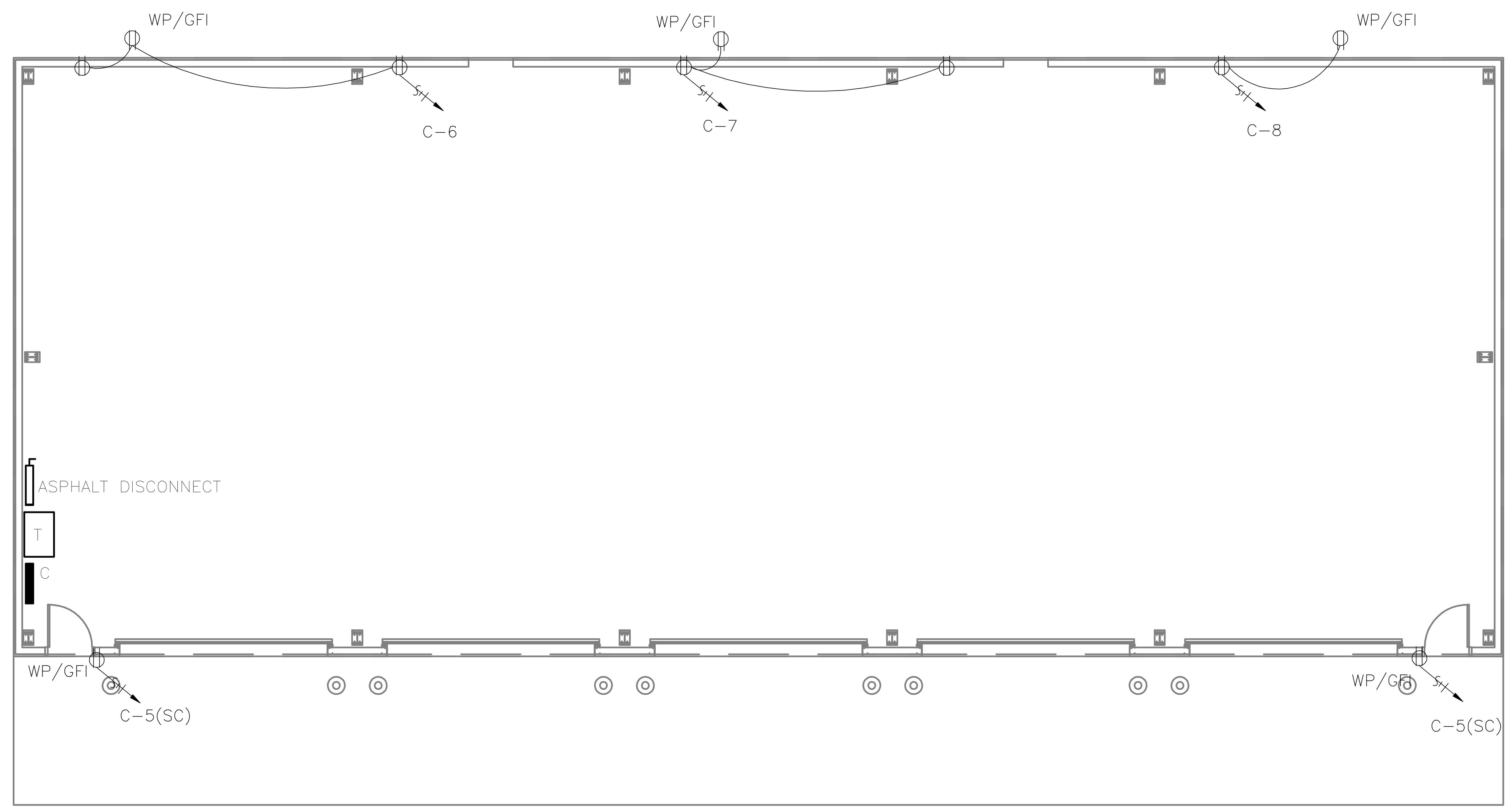

1 POWER PLAN VEHICLE STORAGE BUILDING
SCALE: 1/8" = 1'-0"

0' 2' 4' 8' 16'

SEE E2.1 FOR GENERAL AND KEYED NOTES

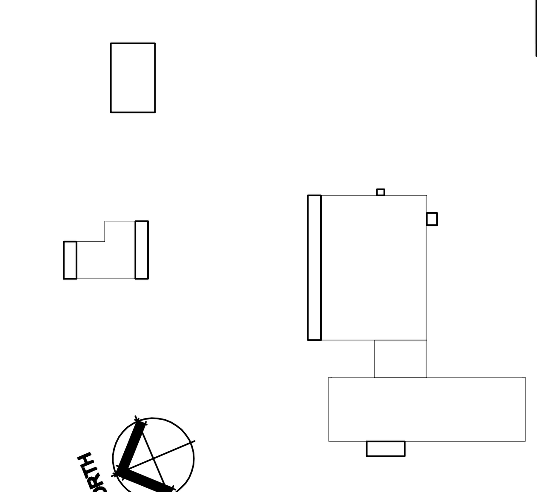

KEY PLAN

POWER PLAN - VEHICLE STORAGE BUILDING

NOTE: THIS DRAWING WAS CREATED FOR PRODUCTION ON 22" x 34" SHEET SIZE. DO NOT SCALE PRINTS.

Texas Department of Transportation
125 E. 11th Street
Austin, Texas 78701-2483
(512) 416-3048
Copyright © 2005 Texas Department of Transportation

THIS DOCUMENT IS RELEASED FOR THE PURPOSE OF INFORMATION ONLY
NOT FOR REGULATORY APPROVAL, PERMITTING, OR CONSTRUCTION.

WACO AREA ENGINEER AND MAINTENANCE FACILITY
WACO, MCLENNAN COUNTY
WACO DISTRICT

Revisions

Drawn by: CON
Project No. CBC4704-00672
Date 05.21.2007
Sheet No.

E2.6
of 15 E sheets

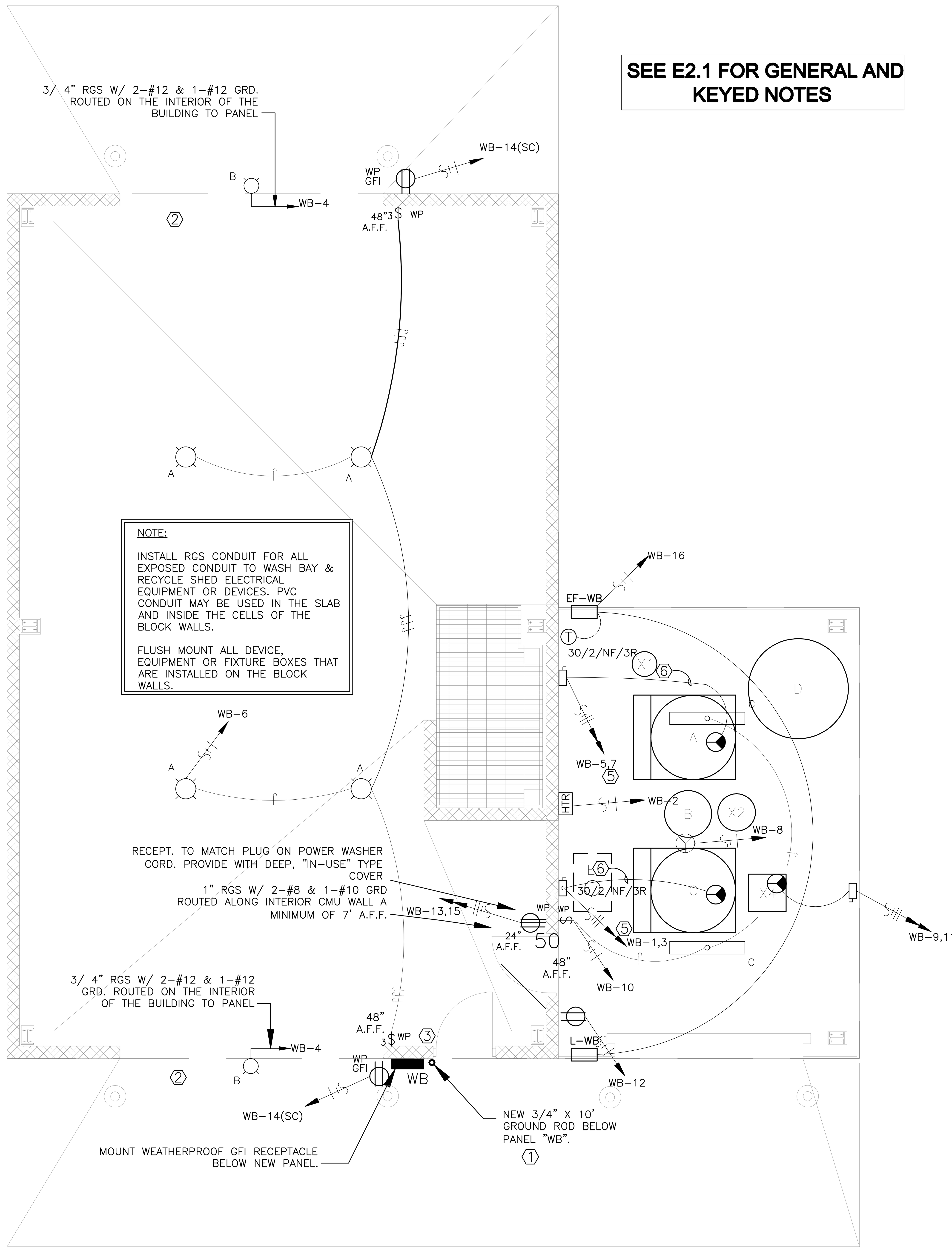

1 ELECTRICAL PLAN - WASH BAY
SCALE: 1/4" = 1'-0"

WASHBAY ELECTRICAL KEYNOTES -

1. NEW 3/4" X 10' GROUND ROD BELOW PANEL "WB". INSTALL A #6 AWG COPPER GROUNDING ELECTRODE CONDUCTOR FROM THE GROUND ROD TO THE GROUND BUSS IN PANEL "WB". ATTACH THIS #6 AWG TO THE GROUND ROD W/ A DEDICATED GROUND ROD CLAMP. FROM ANOTHER DEDICATED GROUND ROD CLAMP ON THIS NEW GROUND ROD, INSTALL A #6 AWG INSULATED, COPPER CONDUCTOR AND CONNECT IT TO THE BUILDING STEEL STRUCTURE AT THE BASE OF A STEEL COLUMN. CONNECT TO THE BUILDING STEEL COLUMN USING AN EXOTHERMIC CONNECTION. FROM A THIRD DEDICATED CLAMP, INSTALL A #6 AWG INSULATED, COPPER CONDUCTOR AND CONNECT IT TO THE NEW COPPER WATER LINE TO THE WASH BAY.
2. CONDUIT INSTALLED ABOVE AND AROUND THE LARGE CASED DOOR OPENINGS SHALL BE ROUTED SO THAT IT WILL NOT INTERFERE WITH THE FUTURE INSTALLATION OF OVERHEAD DOORS AND ELECTRIC DOOR OPERATORS.
3. LOAD CONDUITS ROUTED OUT OF PANEL WB SHALL BE ROUTED INSIDE THE BUILDING TO GET TO THE VARIOUS LOADS AND DEVICES IN THE BUILDING. DO NOT ROUTE CONDUIT AROUND THE OUTSIDE OF THE BUILDING.
4. NOT USED.
5. ROUTE THE RGS FEEDER CONDUIT TO THE RECYCLE SYSTEM A MINIMUM OF 7' A.F.F. AND PROPERLY SUPPORT ON THE BUILDING CMU WALLS WITH CONDUIT STRAPS.
6. NEW 3/4" RGS CONDUIT W/ 3-#10 & 1-#10 GROUND OVERHEAD FROM TOP OF DISCONNECT SWITCH INTO RECYCLE SYSTEM. ROUTE & PROPERLY SUPPORT THIS CONDUIT A MINIMUM OF 8' A.F.F.

WASHBAY-CHASE HEATER SCHEDULE

MARK	WATTS	ELECTRICAL V/HZ/PH	REMARKS
HTR	1500	120/60/1 (12.5 AMPS)	GRAINGER STOCK #5ZK68, WALL MOUNTED SPACE HEATER WITH BUILT-IN THERMOSTAT AND TEMPERATURE CONTROL. INSTALL IN SURFACE MOUNT HOUSING KIT.

WASHBAY-LIGHTING FIXTURE SCHEDULE

TYPE	MANUFACTURER AND MODEL NUMBER	VOLTAGE	LAMPS	NOTES	WATTS
A	LITHONIA TXS-250M-A30-120, LOWBAY TYPE, CAST ALUMINUM HOUSING W/ TOTALLY ENCLOSED & GASKETED ALUMINUM REFLECTOR & ACRYLIC LENS THAT IS UL 1572 COMPLIANT FOR LAMP RUPTURE CONTAINMENT. UL LISTED FOR DAMP LOCATIONS.	120	1-250W METAL HALIDE	PENDANT MOUNT FROM METAL BUILDING ROOF STRUCTURE USING 3/4" RGS STEM W/ BOTTOM OF FIXTURE AT 18' A.F.F. DO NOT SUPPORT ONLY FROM METAL ROOF PANEL.	294
B	LITHONIA TWH-175M-120-PE-D**, WALPAK TYPE, CAST ALUMINUM HOUSING, PRISMATIC GLASS REFRACTOR, WITH PHOTOCELL, UL LISTED FOR WET LOCATIONS, FINISH: FIXTURE COLOR TO BE SELECTED BY OWNER.	120	1-175W METAL HALIDE	MOUNT ON METAL BUILDING SIDING W/ CENTER OF FIXTURE @ APPROX. 16' A.F.F. ADD VERTICAL STEEL MEMBERS OR CHANNEL STRUT INSIDE THE BUILDING TO SUPPORT THE FIXTURES FROM THE INTERIOR HORIZONTAL GIRTS. DO NOT SUPPORT THE FIXTURES SOLELY FROM THE METAL BUILDING SIDING.	215
C	LITHONIA DM-2-32-120 ENCLOSED FLUORESCENT FIXTURE W/ FIBERGLASS HOUSING, ACRYLIC DIFFUSER, CHAIN HANG FROM STRUCTURE W/ BOTTOM OF FIXTURE AT APPROX. 10'-0" A.F.F. UL LISTED FOR DAMP LOCATIONS.	120	2-32 W. T-8 FLUORESCENT	CHAIN HANG FIXTURES FROM ROOF PURLINS. HANG FIXTURES LEVEL. DO NOT SUPPORT THE FIXTURES SOLELY FROM THE METAL BUILDING ROOFING.	62

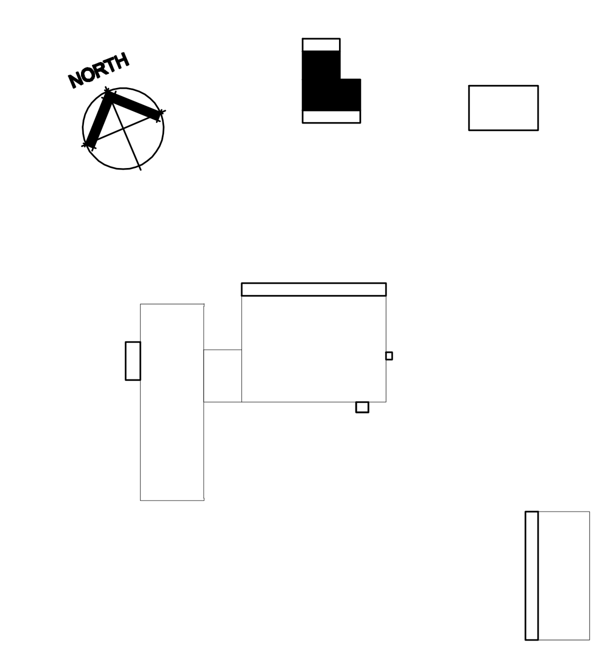

KEY PLAN

Texas Department of Transportation

INFORMATION ONLY
NOT FOR REGULATORY APPROVAL, PERMITTING, OR CONSTRUCTION.

WACO AREA ENGINEER AND MAINTENANCE FACILITY
WACO, MCLENNAN COUNTY WACO DISTRICT

Revisions

Drawn by: CON
Project No. CBC4704-00672
Date 05.21.2007
Sheet No.
E2.7
of 15 E sheets

ELECTRICAL PLAN - WASH BAY

NOTE: THIS DRAWING WAS CREATED FOR PRODUCTION ON 22" x 34" SHEET SIZE. DO NOT SCALE PRINTS.

LIQUID PETROLEUM GAS DETECTION LEGEND & SCHEDULE

MARK	ZONES	MANUFACTURER, MODEL/SIZE	DESCRIPTION
GM	1	ARMSTRONG, AMC-1022D-2	MULTI-DROP GAS MONITORING SYSTEM WITH A HIGH AND A LOW ALARM 120 V, 10 AMP RELAY. SUPPLY VOLTAGE 120 VAC, 60 HZ. FEATURING LED LOW, HIGH, AND FAIL INDICATION. INTERCONNECT EXHAUST FANS AND STROBE WARNING LIGHTS (SEE ELECTRICAL). INSTALL PER MANUFACTURER'S RECOMMENDATIONS.
S	-----	ARMSTRONG, AMC-1225 COMBUSTIBLE GAS	MULTI-DROP GAS SENSOR MODULE COMPATIBLE WITH AMC-1022D. SENSORS SHALL BE DAISY CHAINED TOGETHER. LEAVE THE TERMINATING JUMPER ON THE END SENSOR UNIT. SENSOR IS SOLID STATE, 0 - 50% LEL, PVC ENCLOSURE. MOUNT ALL SENSORS 18" ABOVE FINISHED FLOOR.
WL	-----	FEDERAL SIGNAL CORPORATION, ELECTRAFLASH MODEL#141ST-120A	"ELECTRAFLASH" STROBE WARNING LIGHT FEDERAL SIGNAL GRAINGER #3T948 LENS COLOR BLUE 120 VAC 0.06 AMPS. COMPLETE WITH MOUNTING KIT, GRAINGER #5T588. MOUNT LIGHTS 10 FT ABOVE FINISHED GRADE.
S (siren)	-----	FEDERAL SIGNAL CORPORATION, MODEL A-120 ELECTRIC SIREN, 120 VAC/DC, RED	GENERAL PURPOSE ELECTRO-MECHANICAL SIREN FOR INDUSTRIAL APPLICATIONS. 120VAC 1.8 AMPS. EQUIPPED WITH AN INTERNAL FAN, METAL HOUSING, RATED AT 108dB @ 10'.

GAS DETECTION KEYED NOTES -

1. MOUNT SENSORS 18" A.F.F. DAISY CHAIN SENSORS TOGETHER.
2. MOUNT GAS MONITOR 48 A.F.F.
3. UNLESS OTHERWISE NOTED, ALL HOME RUNS SHALL BE 3 # 12 THHN, 3/4" EMT CONDUIT.
4. ALL SENSOR CONNECTIONS SHALL BE 3 # 18 SHEILD, 1/2" EMT CONDUIT.
5. MOUNT STROBE LIGHTS AND SIRENS 10FT A.F.F..

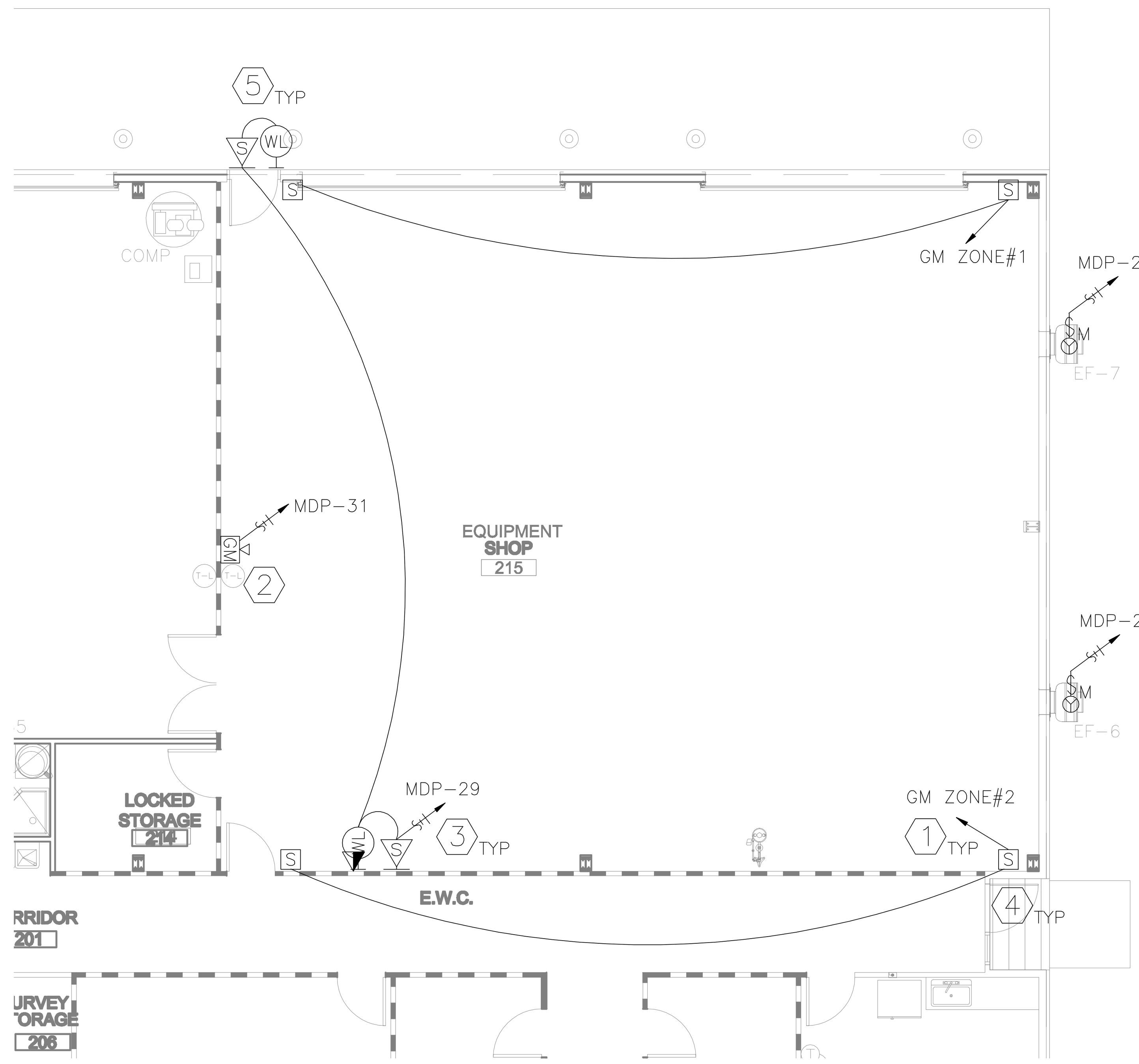

1 GAS DETECTION PLAN KEY PLAN BLDG. #1
SCALE: 1/8" = 1'-0"

0' 2' 4' 8' 16'

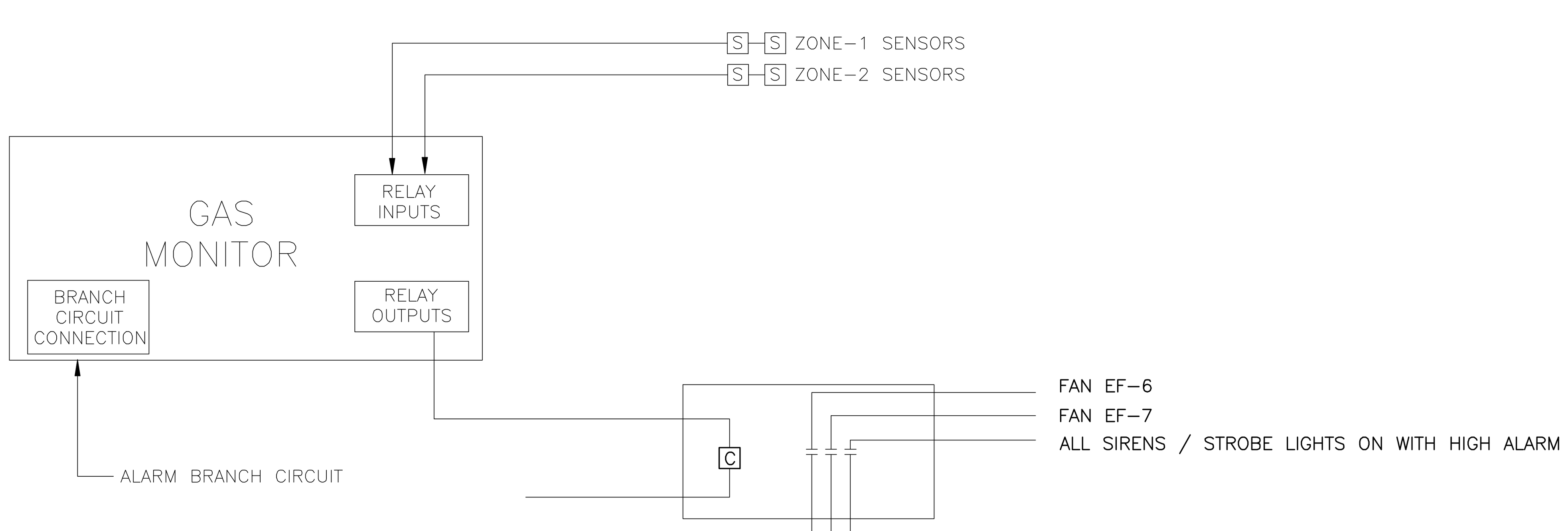

2 LPG GAS DECTECTION RISER
SCALE: NOT TO SCALE

SEE E2.1 FOR GENERAL AND KEYED NOTES

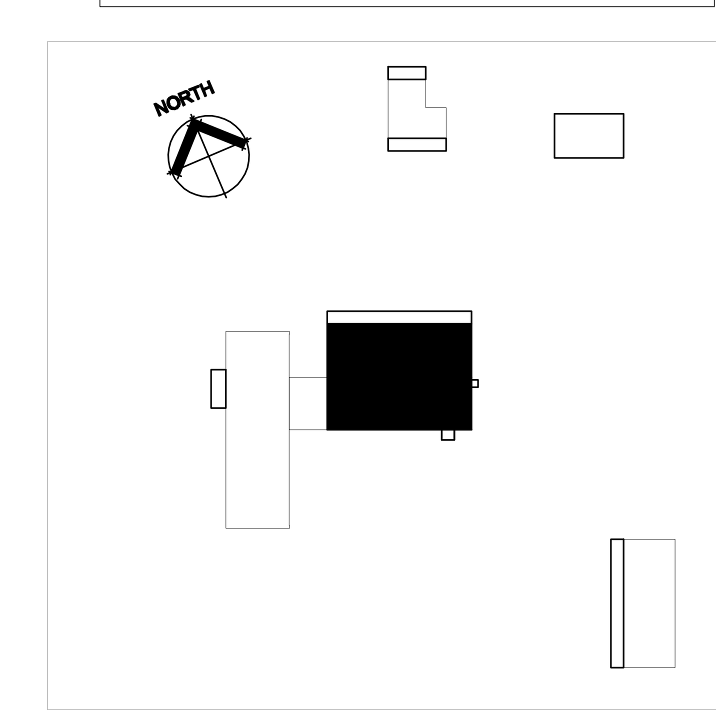

KEY PLAN

GAS DETECTION PLAN - LAB/SHOP BUILDING

NOTE: THIS DRAWING WAS CREATED FOR PRODUCTION ON 22" x 34" SHEET SIZE. DO NOT SCALE PRINTS.

Texas Department of Transportation
125 E. 11th Street
Austin, Texas 78701-2483
(512) 416-3048

Copyright © 2005 Texas Department of Transportation

THIS DOCUMENT IS RELEASED FOR THE PURPOSE OF INFORMATION ONLY
NOT FOR REGULATORY APPROVAL, PERMITTING, OR CONSTRUCTION.

WACO AREA ENGINEER AND MAINTENANCE FACILITY
WACO, MCLENNAN COUNTY
WACO DISTRICT

Revisions

Drawn by: CON
Project No. CBC4704-00672
Date 05.21.2007
Sheet No. E2.8
of 15 E sheets

CADFILE: T:\MNTFM\D02FTW\CBC4704-00-837\02-77-47040087\Acad\prototypical pdfs\waco\Acad\MEP\ELEC\E2_2 and E2_5 and 2_8.dwg Plotted: Fri, Aug. 07, 2009 @ 1:21 PM By: MBAZAN

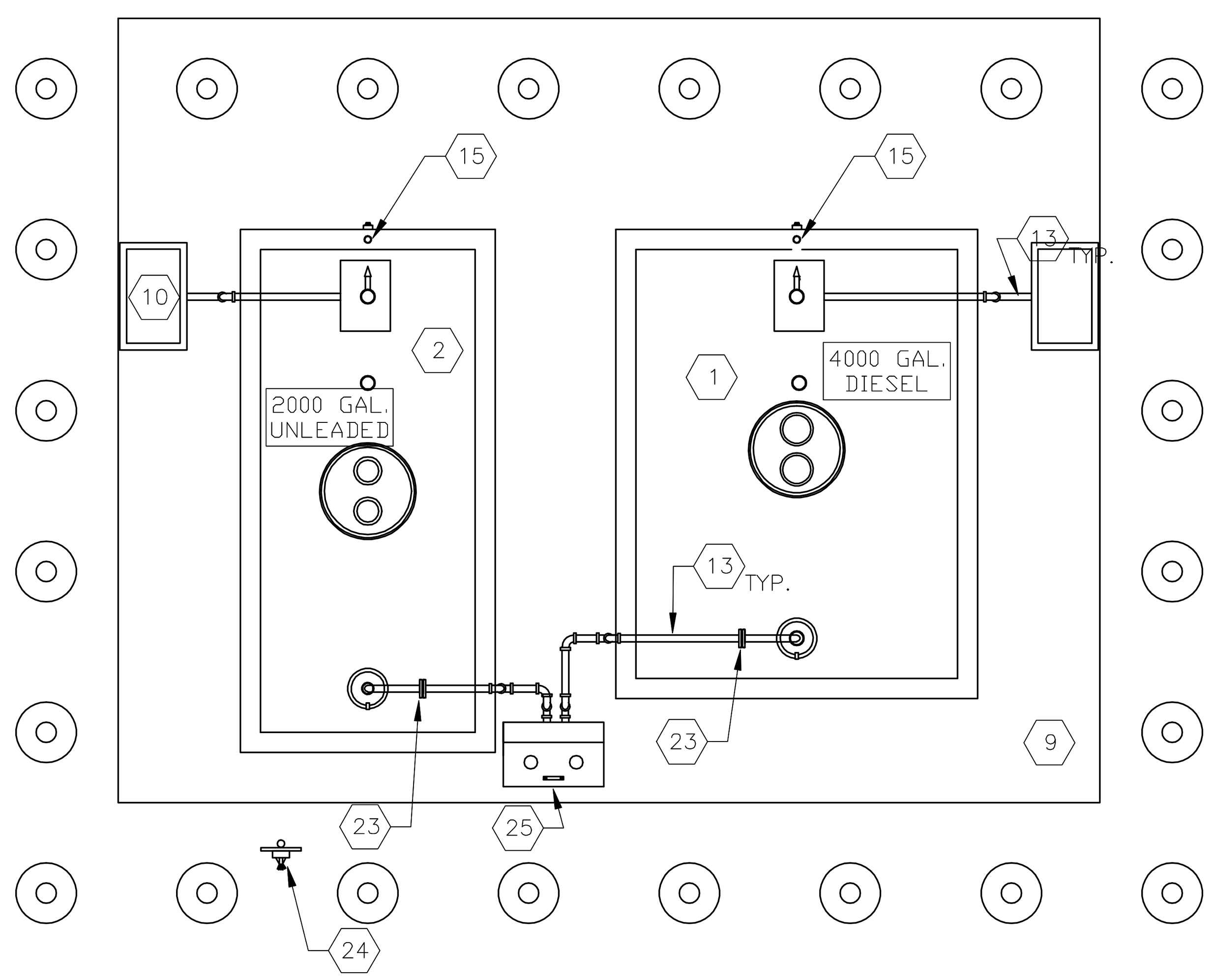

1 FUEL STATION PLAN
SCALE: 1/4" = 1'-0"

0' 1' 2' 4' 8'

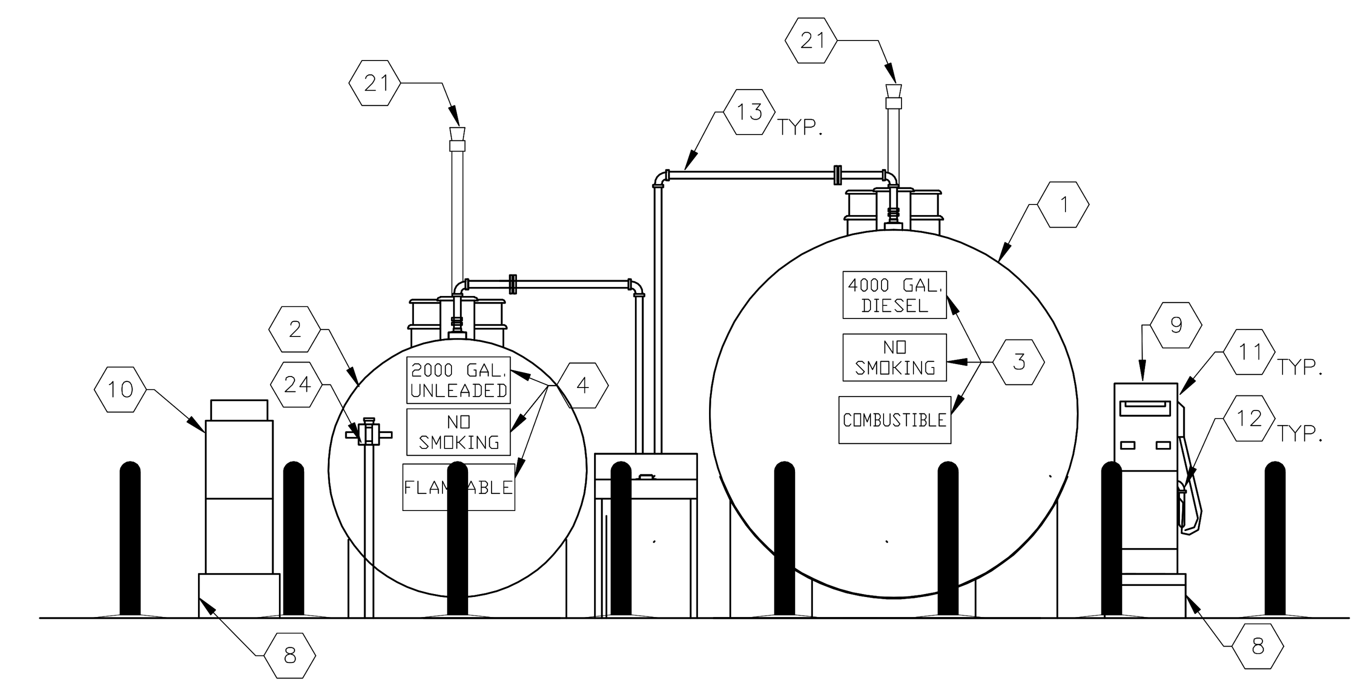

3 FUEL STATION ELEVATIONS
SCALE: 1/4" = 1'-0"

PLACE ON OPPOSITE SIDE OF TANK SHOWN

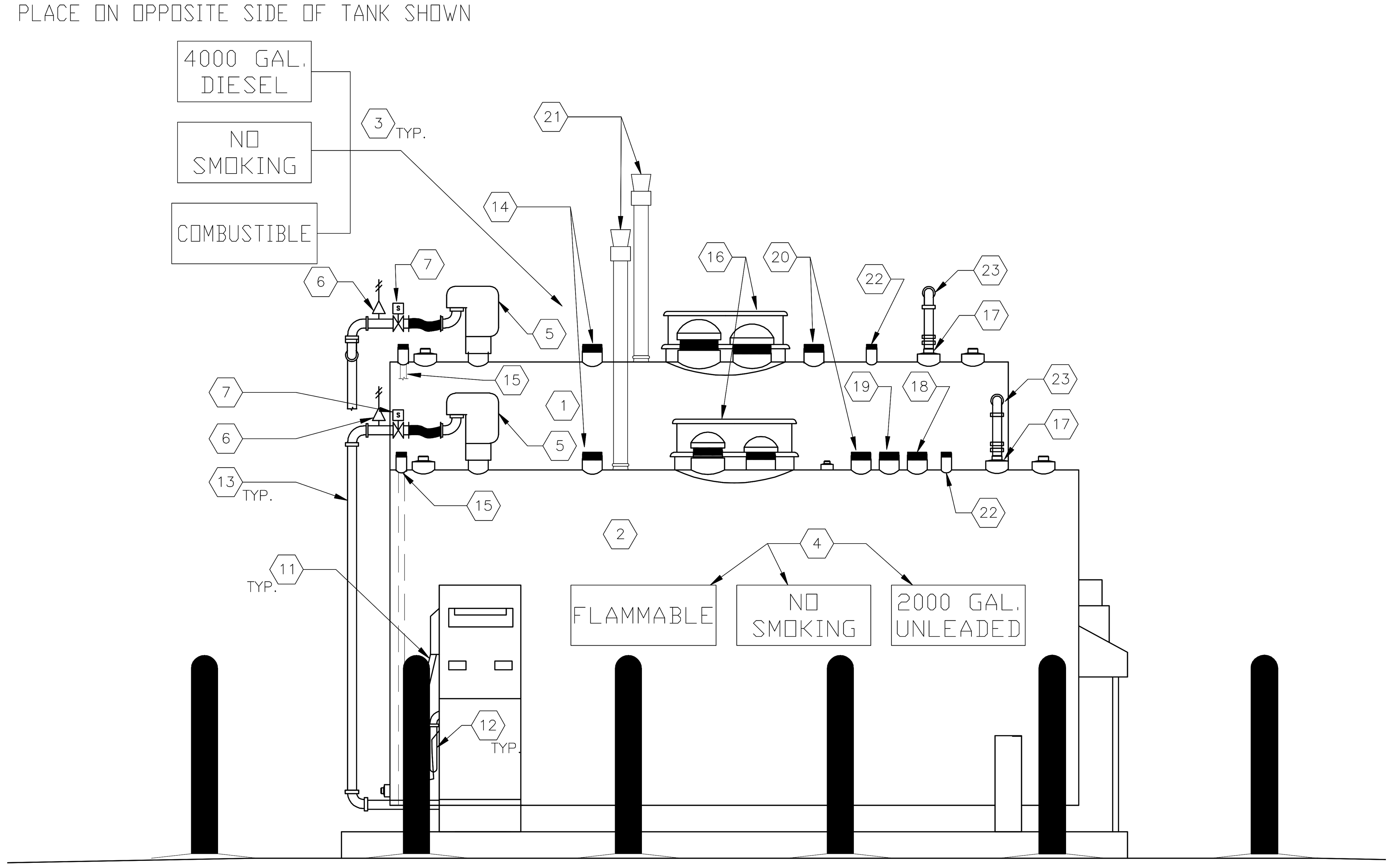

2 FUEL STATION ELEVATIONS
SCALE: 1/2" = 1'-0"

0' 1' 2' 4'

FUEL STATION NOTES

1. CONTRACTOR SHALL BE TCEQ CERTIFIED FOR UNDERGROUND TANK INSTALLATIONS AND REMOVALS, AND CERTIFIED BY THE TANK MANAGEMENT SYSTEM MANUFACTURER. CONTRACTOR SHALL PROVIDE CERTIFICATIONS WITH SUBMITTALS. SPECIFICATION SECTION 11140 – FUEL DISPENSING SYSTEM IS PART OF THE ELECTRICAL CONTRACTORS SCOPE OF WORK.
2. NOTE THAT CONSTRUCTION DRAWINGS ARE DIAGRAMMATIC BY THEIR NATURE, AND ARE NOT INTENDED TO SHOW EVERY CONNECTION IN DETAIL OR EVERY VENT PIPE, TANK PENETRATION OR DEVICE IN ITS EXACT LOCATION. FEATURES AND COMPONENTS NOT SHOWN ARE SUBJECT TO THE REQUIREMENTS OF STANDARDS REFERENCED ELSEWHERE IN THE CONSTRUCTION DOCUMENTS. THE CONTRACTOR SHALL COORDINATE THE VARIOUS TRADES IN ORDER TO AVOID INTERFERENCE BETWEEN DEVICES IT IS THE CONTRACTORS RESPONSIBILITY TO ENSURE A COMPLETE WORKING SYSTEM WHICH SHALL COMPLY WITH NFPA 30, NFPA 30A, AND NFPA 70, AND TEXAS COMMISSION ON ENVIRONMENTAL QUALITY, (TCEQ) FOR ABOVEGROUND STORAGE TANKS. IT IS THE CONTRACTORS RESPONSIBILITY TO OBTAIN REGISTRATION FROM TCEQ AND COMPLY WITH TCEQ, EPA AND NFPA REQUIREMENTS.
3. DESIGN IS BASED ON FIREGUARD ROUND DOUBLE WALL WITH THERMAL INSULATION FOR FIRE PROTECTION. TANKS SHALL BE 2–HOUR FIRE RATED. THE TANK SHALL BE LISTED AND LABELED BY UL–2085. A SAMPLE COPY OF THE TANK'S LABEL AND CERTIFICATION MUST BE INCLUDED WITH THE SUBMITTALS, OR APPROVED EQUAL.
4. CONTRACTOR SHALL FOLLOW THE MANUFACTURER'S RECOMMENDATIONS FOR INSTALLATION REQUIREMENTS. IT IS THE CONTRACTORS RESPONSIBILITY TO INSTALL AND PROVIDE A FULLY FUNCTIONAL SYSTEM INCLUDING ALL THE NECESSARY FITTINGS AND HARDWARE SENSORS, PROBES, TANK LEVEL MONITORING AND LEAK SENSING SYSTEM, RISERS, RISER CAPS AND ATTACHMENTS FOR A COMPLETE FUNCTIONING SYSTEM.
5. ALL PIPING SHALL BE BLACK PIPE MEETING ASTM A–106 STANDARDS. CONTRACTOR SHALL PAINT ALL PIPING WITH A RUST PROHIBITIVE ENAMEL. THE COLOR SHALL BE FIRE ENGINE RED.
6. CONTRACTOR SHALL SUBMIT A COPY OF THE TCEQ ABOVEGROUND FUEL STORAGE TANK CONSTRUCTION NOTIFICATION FORM SUBMITTED TO TCEQ FOR GASOLINE STORAGE TANKS LARGER THAN 1,100 GAL.
7. CONTRACTOR SHALL PROVIDE A DRIVE OVER ASPHALT DIKE BERM AROUND THE FUEL STATION LARGE ENOUGH TO CONTAIN 6,000 GALLONS. PROVIDE A PIPE VALVE SYSTEM TO DRAIN THE AREA. THE BERM SHALL NOT EXCEED 6" IN HEIGHT. DIKE IS NOT SHOWN IN PLANS DUE TO UNKNOWN SLOPES. CONTRACTOR SHALL COORDINATE THE DIKE AREA WITH OTHER DISCIPLINES.

KEYED NOTE "⬡"

1. PROVIDE A 4,000 GALLON DIESEL DOUBLE WALL ROUND TANK WITH THERMAL INSULATION. FIREGAURD UL2085 OR EQUAL.
2. PROVIDE A 2,000 GALLON UNLEADED GASOLINE DOUBLE WALL ROUND TANK WITH THERMAL INSULATION. FIREGAURD UL2085 OR EQUAL.
3. PROVIDE SIGNAGE ON TANK VISIBLE FROM 100FT TO READ THE FOLLOWING, " DIESEL" , "NO SMOKING" , "COMBUSTIBLE", 4,000 GALLONS ON ALL FOUR SIDES.
4. PROVIDE SIGNAGE ON TANK VISIBLE FROM 100FT TO READ THE FOLLOWING, " UNLEADED" , "NO SMOKING" , "FLAMMABLE", 2,000 GALLONS ON ALL FOUR SIDES.
5. PROVIDE AND INSTALL A 208V/1ø 1/3 HP SUBMERSIBLE PUMP. WITH STAINLESS UL LISTED FLEXIBLE CONNECTION.
6. PROVIDE A LINE PRESSURE RELIEF VALVE.
7. PROVIDE A 2" SOLENOID VALVE MORRISON 710 SERIES.
8. PROVIDE REMOTE BASE BY BRAVO SYSTEMS B–8600 SERIES WITH SHEAR VALVE OPW#10 SERIES.
9. PROVIDE REMOTE DISPENSER BY GASBOY MODEL#9100 SERIES OR EQUAL. DESIGN FOR DISPENSING DIESEL.
10. PROVIDE REMOTE DISPENSER BY GASBOY MODEL#9100 SERIES OR EQUAL. DESIGN FOR DISPENSING UNLEADED GASOLINE.
11. PROVIDE U.L. LISTED HOSE, HOSE SWIVEL, BREAKAWAY/WHIP HOSE, AUTOMATIC NOZZLE, HOSE RETRIEVER WITH CRADLE. PROVIDING A FULLY FUNCTIONAL SYSTEM.
12. PROVIDE A PARTICULATE SPIN–OFF FILTER.
13. ALL PIPING, JOINTS, UNIONS AND FITTINGS SHALL BE 2" BLACK PIPE MEETING ASTM A–106 STANDARDS.
14. PROVIDE TANK LEVEL RIGID MONITOR PROBE BY PNEUMERCATOR MODEL#MP450S IN 4" NIPPLE W/ PK4 INSTALLATION CAP KIT. U4K1–UNLEADED–DUAL FLOAT KITS FOR PRODUCT AND WATER. U4K2–DIESEL–DUAL FLOAT KITS FOR PRODUCT AND WATER.
15. PROVIDE 2" MONITOR TUBE INSTALL EXTERNAL LEAK SENSOR BY PNEUMERCATOR MODEL# LS600 LDBN W/ SK2 2" INSTALLATION CAP AND ADAPTER KIT.
16. PROVIDE 6" PRIMARY EMERGENCY VENT.
17. PROVIDE 2" MECHANICAL SHUT OFF VALVE SET AT 95%, OPW 61FSTOP–1000 COMPLETE WITH OPW61FT DROP TUBE TO PROVIDE SUBMERGED FILLING.
18. PROVIDE 4" NIPPLE CAP & SEAL AND MARK FOR FUTURE STAGE 1 VAPOR RECOVERY, (UNLEADED ONLY).
19. PROVIDE 4" SPARE NIPPLE CAP & AND MARK FOR FUTURE STAGE 2 VAPOR RECOVERY, (UNLEADED ONLY).
20. PROVIDE AND INSTALL CLOCK GAUGE OPW 200TG WITH PROP TUBE.
21. PROVIDE 2" VENT CAP AND RISER. VENT SHALL TERMINATE AT LEAST 12' ABOVE FINISHED FLOOR AND AT LEAST 2' ABOVE NEAREST STRUCTURE.
22. PROVIDE A 2" STICK PORT WITH TWO TANK MEASURING STICKS.
23. PROVIDE TANK INLET SPOUT ADAPTER WITH CROSSBAR OPW #633AST–2061 AND CAM LOCK COUPLER OPW #633B–0150. PROVIDE 2" FLANGED CONNECTION AT VALVE IN THE VERTICAL PLANE.
24. PROVIDE AND INSTALL 4FT A.F.F. RACK MOUNT REMOTE AUDIBLE / VISIBLE ALARM ANNUNCIATOR BY PNEUMERCATOR MODEL#LC1002. REFER TO SHEET E2.21 FOR WIRING INSTRUCTIONS. TANK LEVEL MONITORING AND LEAK SENSING SYSTEM SHALL TRIGGER THE REMOTE ANNUNCIATOR TO SEND AN AUDIBLE/VISIBLE ALARM WITH A RED LIGHT FOR EACH TANK INDICATING WHICH TANK REACHED THE 90% STORAGE CAPACITY AND/OR UPON LEAK DETECTION.
25. PROVIDE A REMOTE FILL ABOVE GROUND STORAGE TANK SPILL CONTAINER OPW #6–211–R–30–2–B2–LD.

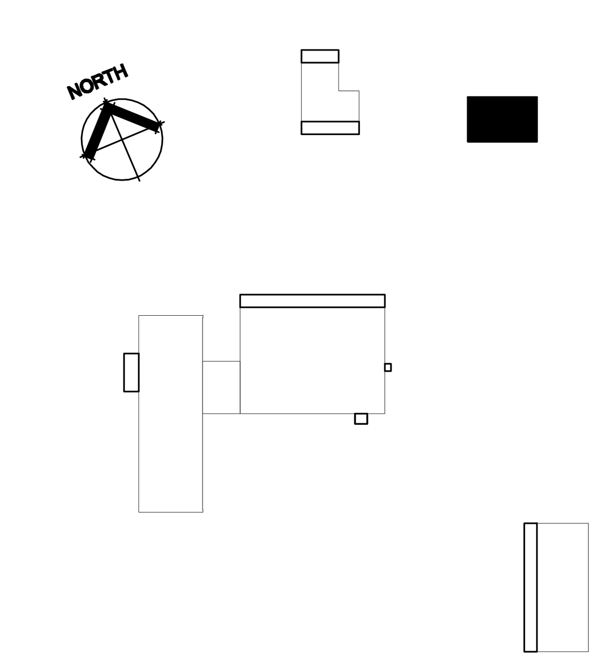

KEY PLAN

Texas Department of Transportation
125 E. 11th Street
Austin, Texas 78701-2483
(512) 416-3048

Copyright © 2005 Texas Department of Transportation

THIS DOCUMENT IS RELEASED FOR THE PURPOSE OF INFORMATION ONLY
NOT FOR REGULATORY APPROVAL, PERMITTING, OR CONSTRUCTION.

WACO AREA ENGINEER AND MAINTENANCE FACILITY
WACO, MCLENNAN COUNTY
WACO DISTRICT

Revisions

Drawn by: CON
Project No. CBC4704-00672
Date 05.21.2007
Sheet No.
E2.20
of 15 E sheets

FUEL STATION PLAN - SCHEDULE & ELEVATIONS

NOTE: THIS DRAWING WAS CREATED FOR PRODUCTION ON 22" x 34" SHEET SIZE. DO NOT SCALE PRINTS.

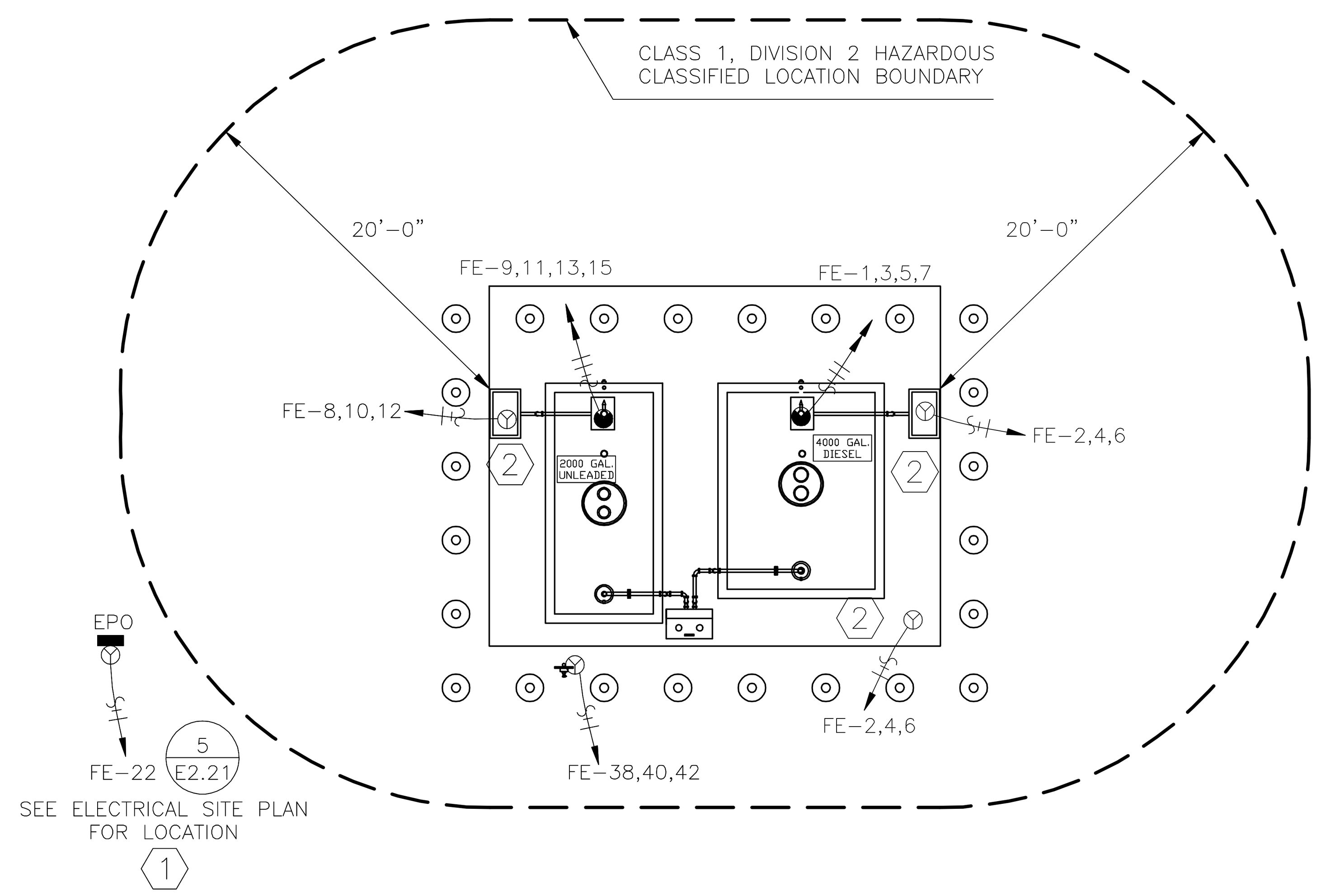

1 FUEL STATION POWER AND SPECIAL SYSTEMS
SCALE: 1/8" = 1'-0"

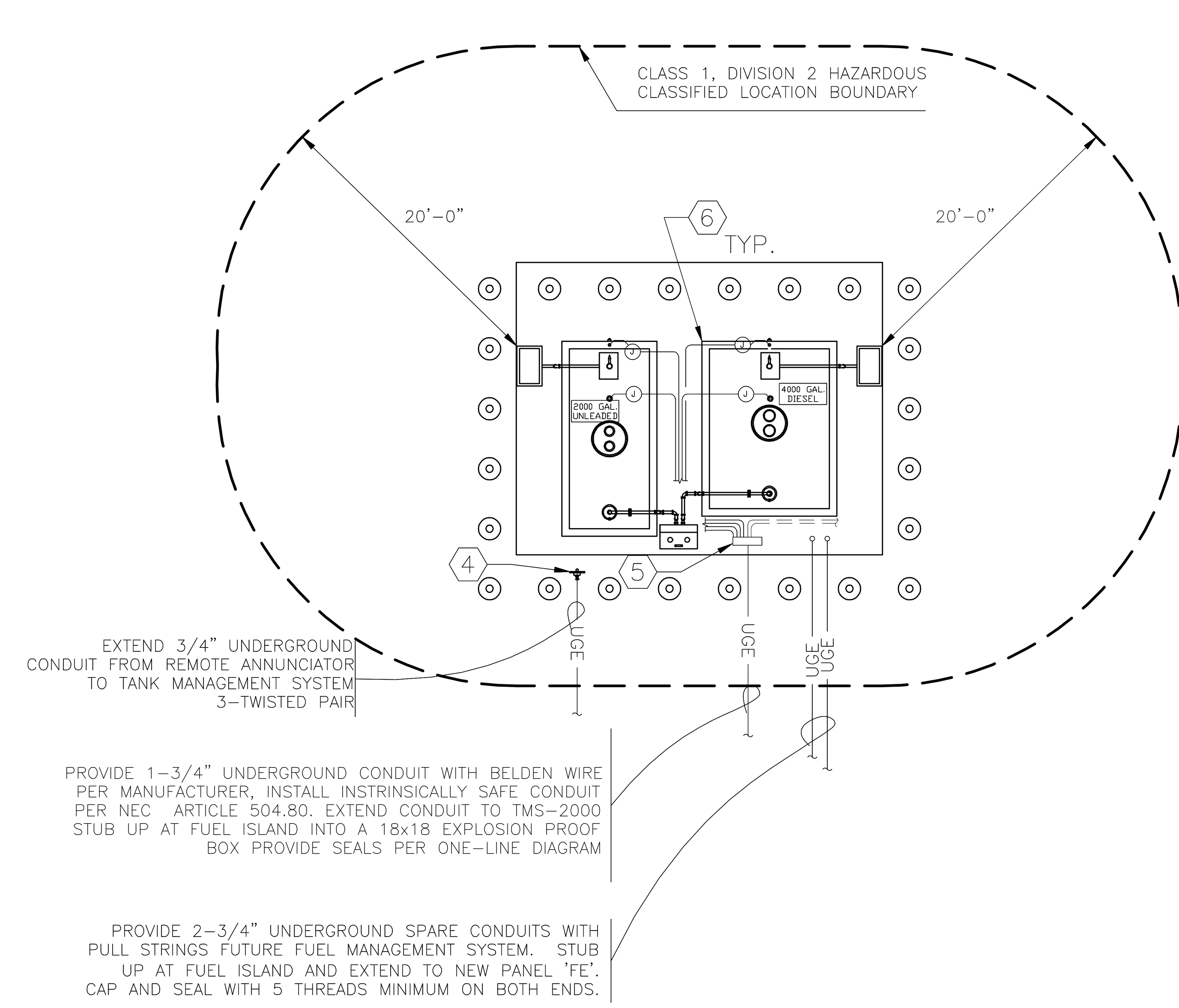

2 FUEL STATION SPECIAL SYSTEMS
SCALE: 1/8" = 1'-0"

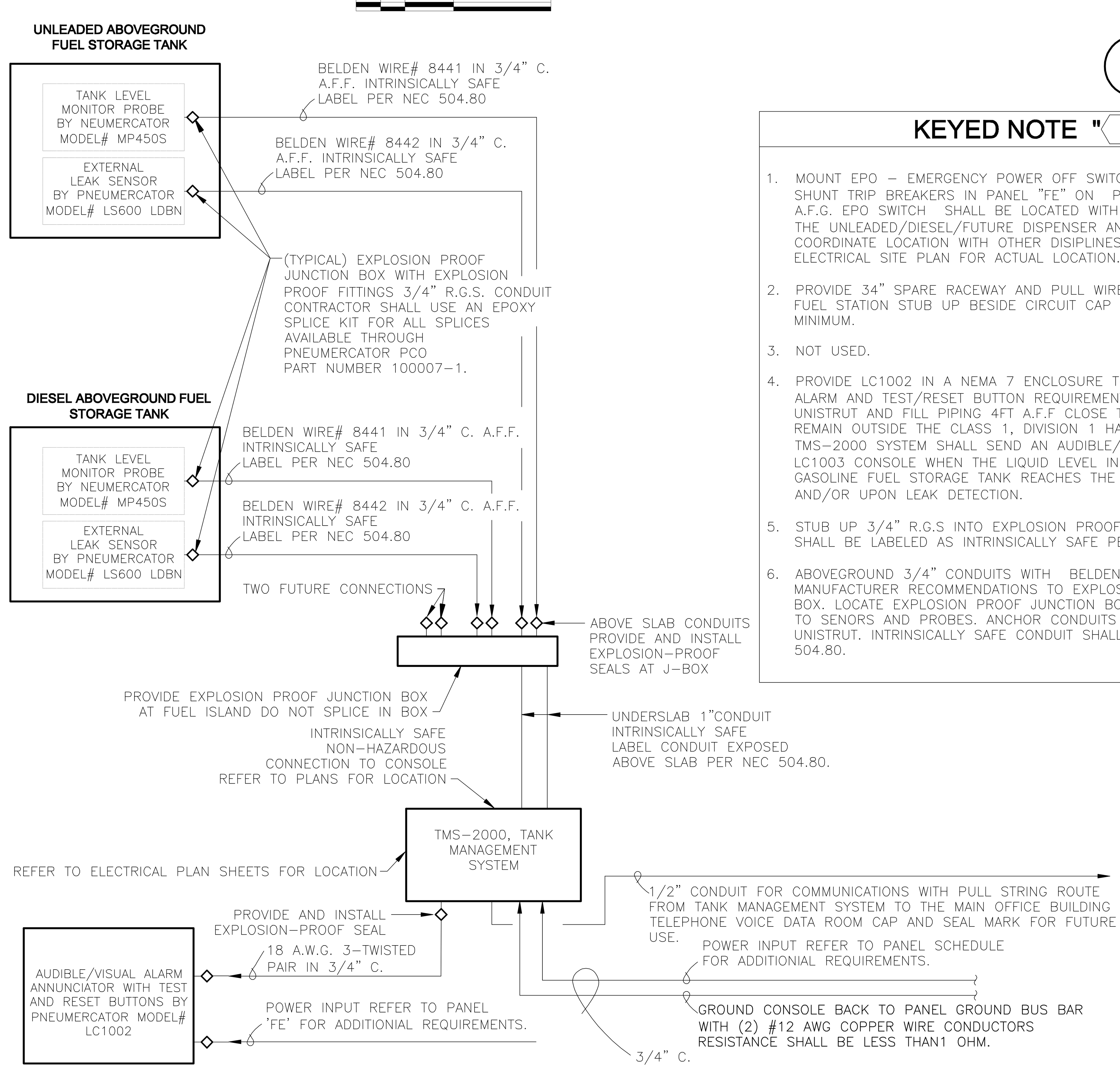

3 WIRING DIAGRAM FOR TANK MANAGEMENT SYSTEM WITH IN-TANK AND SECONDARY CONTAINMENT LEAK DETECTION
SCALE: NOT TO SCALE

KEYED NOTE "⬡"

1. MOUNT EPO – EMERGENCY POWER OFF SWITCH TO ACTIVATE ALL SHUNT TRIP BREAKERS IN PANEL "FE" ON PEDESTAL PER NEC 48" A.F.G. EPO SWITCH SHALL BE LOCATED WITHIN 20 TO 100FT FROM THE UNLEADED/DIESEL/FUTURE DISPENSER AND LPG DISPENSORS. COORDINATE LOCATION WITH OTHER DISIPLINES. REFERENCE ELECTRICAL SITE PLAN FOR ACTUAL LOCATION.
2. PROVIDE 34" SPARE RACEWAY AND PULL WIRE FROM PANEL 'FE' TO FUEL STATION STUB UP BESIDE CIRCUIT CAP WITH 5 THREADS MINIMUM.
3. NOT USED.
4. PROVIDE LC1002 IN A NEMA 7 ENCLOSURE TO SATISFY REMOTE ALARM AND TEST/RESET BUTTON REQUIREMENTS. RACK MOUNT WITH UNISTRUT AND FILL PIPING 4FT A.F.F CLOSE TO REMOTE FILL BOX. REMAIN OUTSIDE THE CLASS 1, DIVISION 1 HAZARDOUS AREAS. TMS-2000 SYSTEM SHALL SEND AN AUDIBLE/VISIBLE ALARM TO THE LC1003 CONSOLE WHEN THE LIQUID LEVEL IN THE DIESEL AND/OR GASOLINE FUEL STORAGE TANK REACHES THE 90% STORAGE CAPACITY AND/OR UPON LEAK DETECTION.
5. STUB UP 3/4" R.G.S INTO EXPLOSION PROOF JUNCTION BOX. BOX SHALL BE LABELED AS INTRINSICALLY SAFE PER NEC 504.80.
6. ABOVEGROUND 3/4" CONDUITS WITH BELDEN WIRE PER MANUFACTURER RECOMMENDATIONS TO EXPLOSION PROOF JUNCTION BOX. LOCATE EXPLOSION PROOF JUNCTION BOXS FOR CONNECTION TO SENORS AND PROBES. ANCHOR CONDUITS TO TOP OF SLAB WITH UNISTRUT. INTRINSICALLY SAFE CONDUIT SHALL BE LABELED PER NEC 504.80.

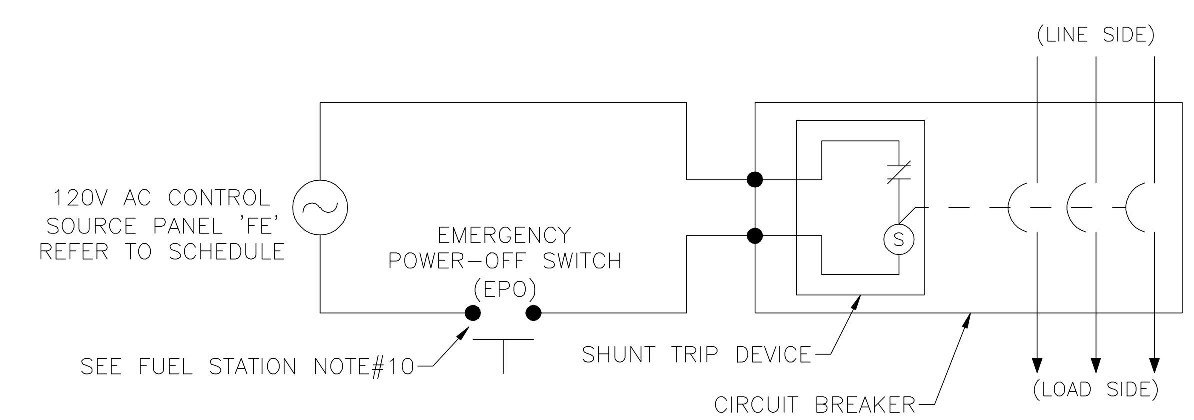

4 SHUNT TRIP WIRING DIAGRAM
SCALE: NOT TO SCALE

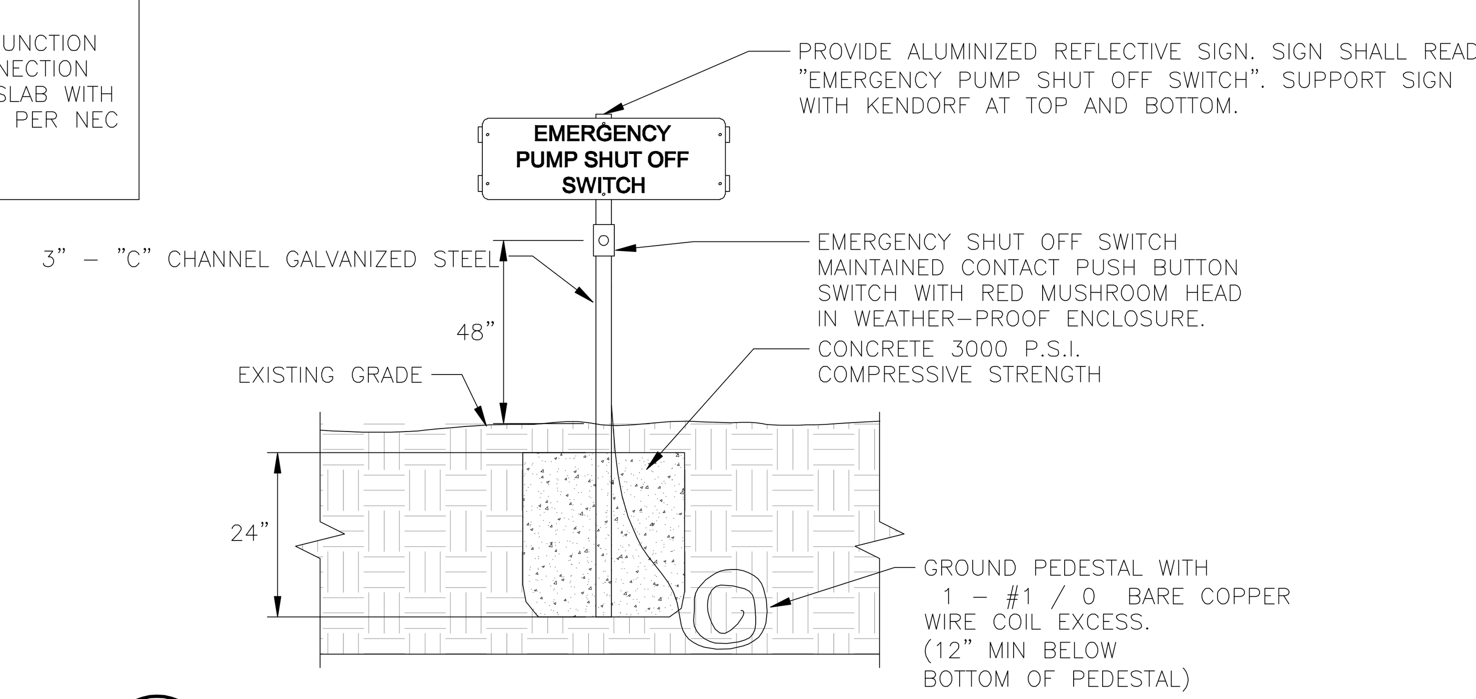

5 EMERGENCY SHUT OFF SWITCH MOUNT ON PEDESTAL
SCALE: NOT TO SCALE

FUEL STATION NOTES

1. ALL BRANCH CIRCUIT WIRING FROM PANEL 'FE' TO THE FUEL STATION SHALL BE TYPE THHN GASOLINE & OIL RESISTANT SOLID WIRE A MINIMUM OF #12 WIRE IN 3/4"C., GASOLINE RESISTANT, AND INSTALLED IN RIGID GALVANIZED STEEL (R.G.S.). ALL BELOW GRADE CONDUIT SHALL BE RIGID NONMETALIC CONDUIT ENCASED IN RED CONCRETE 3" THICK . ALL LONG RADIUS 90° ELBOWS EMERGING FROM THE EARTH OR CONCRETE SHALL BE RIGID GALVANIZED STEEL AND DOUBLE WRAPPED. CONTRACTOR SHALL INSTALL EXPLOSION-PROOF SEALS IN RIGID GALVANIZED STEEL.
2. THE FIRST FITTING ABOVE THE SLAB SHALL BE AN N.E.C. APPROVED EXPLOSION-PROOF SEAL INSTALL AND PROVIDE SEALS IN ALL CONDUITS EMERGING AND LEAVING THE SLAB AT THE FUEL ISLAND AND AT PANEL "FE", PER N.E.C..
3. THE ELECTRICAL INSTALLATION FOR THE FUEL ISLAND, INCLUDING POWER AND COMMUNICATIONS, SHALL COMPLY WITH THE NATIONAL ELECTRICAL CODE, ARTICLES 500, 501, 502, 504, AND 514 AND ALL RELATED ARTICLES THEREOF.
4. ALL CONDUITS SHALL BE INSTALLED UNDERGROUND PRIOR TO FUEL ISLAND'S CONCRETE FOUNDATION INSTALLATION.
5. PROVIDE AND INSTALL A TANK MANAGEMENT SYSTEM WITH IN-TANK LEVEL PROBES AND SECONDARY CONTAINMENT LEAK DETECTION BY PNEUMERCATOR, "TMS 2000 SERIES" WITH A LC1003 AT FUEL ISLAND TO SERVE AS THE REMOTE ALARM AND TEST/RESET BUTTON. IF A DIFFERENT SYSTEM IS PROVIDED, IT SHALL BE THE CONTRACTOR'S RESPONSIBILITY TO PROVIDE THE CORRECT TYPE AND QUANTITY OF COMMUNICATION CABLING AND CONDUITS FOR THAT SYSTEM.
6. CONTRACTOR SHALL FOLLOW THE MANUFACTURER'S RECOMMENDATIONS FOR INSTALLATION REQUIREMENTS. IT IS THE CONTRACTORS RESPONSIBILITY TO INSTALL AND PROVIDE A FULLY FUNCTIONAL SYSTEM INCLUDING ALL THE NECESSARY FITTINGS AND HARDWARE SENSORS, PROBES, RISERS, RISER CAPS AND ATTACHMENTS FOR A COMPLETE FUNCTIONING SYSTEM.
7. NO SPLICES SHALL BE MADE IN THE WIRE RUN BETWEEN A SENSOR OR PROBE JUNCTION BOX AND THE TANK LEVEL MONITOR & LEAK SENSING CONSOLE.
8. WHEN AN ADDITIONAL EPO IS REQUIRED IN THE PLANS ALL EPO SWITCHES SHALL BE WIRED IN PARALLEL TRIPING ALL SHUNT TRIP BREAKERS IN PANEL 'FE'.
9. MOUNT EACH EPO – EMERGENCY POWER OFF SWITCH TO ACTIVATE ALL SHUNT TRIP CIRCUIT BREAKERS IN PANEL 'FE' ON PEDESTAL PER NEC 48" A.F.G. THE SWITCH SHALL BE LOCATED MORE THAN 20 BUT LESS THAN 100FT FROM UNLEADED/DIESEL/FUTURE AND LPG FUEL DISPENSERS. REFER TO DETAIL 5 THIS SHEET FOR FURTHER REQUIREMENTS.
10. WHEN MORE THAN ONE EPO SWITCH IS REQUIRED EACH EPO SWITCH SHALL DISCONNECT SIMULTANEOUSLY FROM THE SOURCE OF SUPPLY, ALL CONDUCTORS OF THE CIRCUIT, INCLUDING THE GROUNDED CONDUCTOR PER N.E.C., ARTICLE 514-11(A) "CIRCUIT DISCONNECTS".
11. EACH EMERGENCY POWER-OFF SWITCH (EPO) SHALL BE A MAINTAINED BE CLEARLY IDENTIFIED AND EASILY ACCESSIBLE AND BE INSTALLED IN A REMOTE LOCATION MORE THAN 20 FEET BUT LESS THAN 100 FEET FROM THE DISPENSER UNITS AND ALSO IN LINE OF SIGHT OF THE DISPENSER UNITS. THE EMERGENCY STOP BUTTON SHALL BE A MANUFACTURERED EMERGENCY STOP CONTROL STATION COMPLETE KIT WITH A CLEAR COVER AND EMERGENCY STOP SIGNAGE WITHIN ENCLOSURE BY POWER INTERGITY #IA-ESOC.
12. PROVIDE TWO HOURS OF TRAINING TO OWNER SELECTED PERSONNEL ON TANK LEVEL AND MONITORING AND LEAK SENSING SYSTEM BY MANUFACTOR.
13. FUEL STATION CONTRACTOR SHALL SUBMIT TO THE OWNER A COPY OF THE CERITIFICATION LETTER FROM THE TANK MANAGEMENT SYSTEM MANUFACTURER STATING THE SYSTEM IS FUNCTIONING AND INSTALLED PROPERLY.
14. INTRINSICALLY SAFE INPUT WIRING SHALL BE INSTALLED IN PER N.E.C. ARTICLE 504. NON-TRINSICALLY SAFE WIRING CANNOT BE RUN IN CONDUIT OR OPEN RACEWAYS TOGETHER WITH INTRINISICALLY SAFE WIRING.

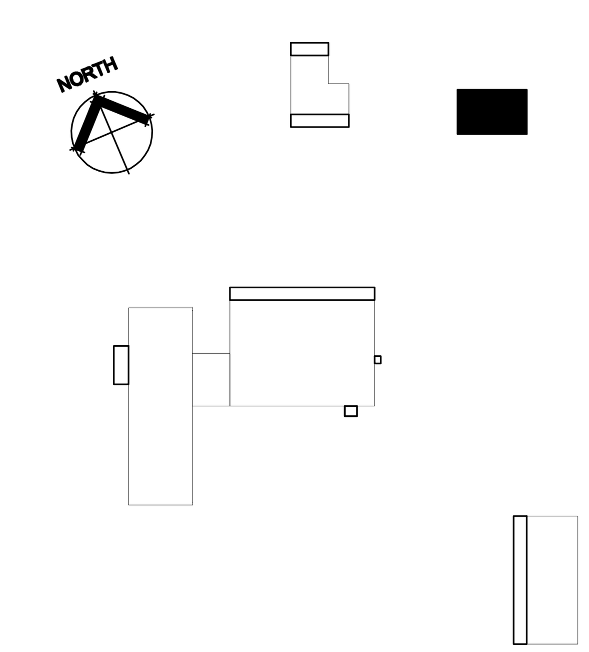

KEY PLAN

Texas Department of Transportation
125 E. 11th Street
Austin, Texas 78701-2483
(512) 416-3000
Copyright © 2005 Texas Department of Transportation

THIS DOCUMENT IS RELEASED FOR THE PURPOSE OF INFORMATION ONLY
NOT FOR REGULATORY APPROVAL, PERMITTING, OR CONSTRUCTION.

WACO AREA ENGINEER AND MAINTENANCE FACILITY
WACO, MCLENNAN COUNTY WACO DISTRICT

Revisions

Drawn by: CON
Project No. CBC4704-00672
Date 05.21.2007
Sheet No.
E2.21
of 15 E sheets

FUEL STATION PLAN - POWER & SPECIAL SYSTEMS
NOTE: THIS DRAWING WAS CREATED FOR PRODUCTION ON 22" x 34" SHEET SIZE. DO NOT SCALE PRINTS.

LIGHTING FIXTURE SCHEDULE

TYPE	MANUFACTURER AND MODEL NUMBER	VOLTAGE	LAMPS	NOTES	INPUT WATTS
A	LITHONIA 2SP8-G-232-A12125-120-GEB	120	2-F32T8	2 LAMP LAYIN TROFFER	65
AE	LITHONIA 2SP8-G-232-A12125-120-GEB-EL	120	2-F32T8	SAME AS 'A' WITH BATTERY PACK	65
B	LITHONIA 2SP8-G-332-A12125-120-1/3GEB	120	3-F32T8	3 LAMP LAYIN TROFFER	65
BE	LITHONIA 2SP8-G-332-A12125-120-1/3GEB-EL	120	3-F32T8	SAME AS 'B' WITH BATTERY PACK	65
BD	LITHONIA 2SP8-G-332-A12125-120-GEB	120	3-F32T8	3 LAMP LAYIN TROFFER WITH DUAL LEVEL SWITCHING	100
BDE	LITHONIA 2SP8-G-332-A12125-120-GEB-EL	120	3-F32T8	SAME AS 'BD' WITH BATTERY PACK	100
D	LITHONIA WP-225-ACF125-120-GEB	120	2-F25T8	WALL MOUNTED FIXTURE MOUNT 8' A.F.F.	65
E	LITHONIA C-232-120-GEB-WG	120	2-F32T8	CHANNEL FIXTURE WITH WIRE GUARD	65
EE	LITHONIA C-232-120-GEB-WG-EL	120	2-F32T8	SAME AS 'E' WITH BATTERY PACK	65
GD	LITHONIA AF-2-18TRT-8-AR-T73-120	120	2-18TRT	RECESSED FLOURESCENT DOWNLIGHTING	40
G	LITHONIA AF-1-18TRT-8-AR-T73-120	120	1-18TRT	RECESSED FLOURESCENT DOWNLIGHTING	18
J	LITHONIA DMW-232-AR-120-GEB	120	2-F32T8	ENCLOSED INDUSTRIAL CHANNEL FIXTURE	65
K	SPECLIGHT GB24-6-32-N1-X20U-MVOLT-GEB LPM841XS-WG-HDS**	120	6-F32T8 4100 K	CHAIN HUNG FLUORESCENT FIXTURE	300
KE	SPECLIGHT GB24-6-32-N1-X20U-MVOLT-GEB LPM841XS-WG-HDS**	120	6-F32T8 4100 K	SAME AS 'K' WITH BATTERY PACK	300
L	SPECLIGHT GB14-3-32-N1-X20U-MVOLT-GEB LPM841XS-WG-HDS**	120	3-F32T8 4100 K	CHAIN HUNG FLUORESCENT FIXTURE	100
LE	SPECLIGHT FHB14-3-32-N1-X20U-MVOLT-GEB LPM841XS-WG-HDS**	120	3-F32T8 4100 K	SAME AS 'L' WITH BATTERY PACK	100
M	LITHONIA TWH-175M-120-DNA	120	1-175W MH	WALL PACK - COLOR BY ARCHITECT	210
N	LITHONIA AH-50M-8-AR-120	120	1-50W MH	DAMP LOCATION RECESSED DOWN LIGHT	70
NS	LITHONIA AH-50M-8-AR-120-SCA*	120	1-50W MH	SAME AS "N" SLOPE SHALL BE FIELD VERIFIED	70
R	LITHONIA LFG-2-18TRT-10-RW-FFL-120	120	2-18TRT	WET LOCATION RECESSED DOWN LIGHT	40
P	LITHONIA TFM-70M-TA-TB	208	1-70W MH	MOUNT FLOOD LIGHT 5 FEET FROM CENTER LINE OF SIGN	90
SR	LITHONIA KAD-400M-R2-TB-RPD09-DDB	208	1-400W MH	ROADWAY AREA LIGHT INSTALL LIGHT POLE 4 FEET FROM CURB	455
POLE	LITHONIA RTS-30-6-6B			POLE FOR AREA LIGHT. # OF FIXTURES /POLE ON PLANS	
X1	LITHONIA LHQM-S-W-1-R-120-N-H	120	LED	SINGLE FACE EXIT SIGN	3.9
X2	LITHONIA LHQM-S-W-2-R-120-N-H	120	LED	DOUBLE FACE EXIT SIGN	3.9

ELECTRICAL SYMBOLS LEGEND

- NOVITAS MODEL# 01-110 CEILING MOUNTED LARGE ROOM TWO-WAY ULTRASONIC MOTION SENSOR .
- NOVITAS MODEL# 01-190 CEILING MOUNTED TWO-WAY CORRIDOR ULTRASONIC MOTION SENSOR .
- SP — NOVITAS MODEL# 13-051 MOUNTED ABOVE CEILING HEAVY DUTY SWITCHPACK, 20 AMPS @ 120VAC BALLAST.
- PIR — NOVITAS SUPER SWITCH 2, MODEL# 01-400, PASSIVE INRARED WALL SWITCH, 6.7 AMPS @ 120VAC BALLAST.
- PIR DL — NOVITAS SUPER SWITCH 2, MODEL# 01-DL400, PASSIVE INRARED WALL SWITCH WITH CONTROL FOR TWO SEPARATE LOADS. RATED AT 6.7 AMPS @ 120VAC BALLAST.
- $ — WALL SWITCH
- $3 — 3-WAY WALL SWITCH
- $4 — 4-WAY WALL SWITCH
- $M — MANUAL MOTOR STARTER
- PP — MODULAR FURNITURE POWER POLE
- FPP — ELECTRICAL CONTRACTOR PROVIDED FREE STANDNING POWER POLE WITH TWO RECESSED RECEPTACLES AND STANDARD 2-VOICE, 2-DATA OUTLET
- LIGHT FIXTURE
- EXIT SIGN
- EMERGENCY LIGHTING FIXTURE
- VOICE ONLY
- STANDARD 2-VOICE, 2-DATA
- DATA LINE ONLY
- DUPLEX RECEPTACLE
- DOUBLE DUPLEX (QUAD) RECEPTACLE
- ISOLATED GROUND (IG) DUPLEX RECEPTACLE
- R — 208/240V RECEPTACLE-RATING AS SHOWN
- DISCONNECT SWITCH
- X — FULL VOLTAGE NON-REVERSING FUSIBLE DISCONNECT SWITCH TYPE COMBINATION STARTER X= NEMA SIZE
- X — FULL VOLTAGE NON-REVERSING CONTACTOR AND STARTER X= NEMA SIZE
- LC — LIGHTING CONTACTOR
- MC — MECHANICALLY HELD MULTIPOLE CONTACTOR
- T — FLOOR MOUNTED TRANSFORMER
- TC — TIME CLOCK
- R — RELAY
- HOA — HAND OF AUTO SELECTOR SWITCH
- DISTRIBUTION PANEL OR SWITCHBOARD
- PANELBOARD
- J — JUNCTION BOX
- 120V 1PH CONNECTION
- 208V 1PH CONNECTION
- 208V 3PH CONNECTION
- 240V 1PH CONNECTION
- 240V 3PH CONNECTION
- 277V 1PH CONNECTION
- 480V 3PH CONNECTION
- PC — PHOTO - CELL

BRANCH CIRCUIT & WIRE NOTATION

A1-10: PANEL AND CIRCUIT NUMBERS; EQUIPMENT GROUND; ISOLATED GROUND; SWITCH LEG; HOT; NEUTRAL

LISTED ABBREVIATIONS

BOF	BOTTOM OF FIXTURE
GFI	GROUND FAULT INTERUPT
WP	WEATHERPROOF DEVICE OR ENCLOSURE
RGS	RIGID GALVANIZED STEEL CONDUIT
PVC	POLY VINYL CLORIDE CONDUIT
EMT	ELECTRICAL METALIC TUBING CONDUIT
AFR	ABOVE FINISHED ROOF
AFF	ABOVE FINISHED FLOOR
BFG	BELOW FINISHED GRADE
AFG	ABOVE FINISHED GRADE
SCH.	SCHEDULE

- —UGE— UNDERGROUND ELECTRICAL
- —UVD— UNDERGROUND VOICE DATA
- —UGT— UNDERGROUND TELEPHONE SERVICE

TVSS/1 — TRANSIENT VOLTAGE SURGE SUPPRESSOR: DITEK MODEL DTGX-120-208-3Y, 200,000 AMP RATED PER PHASE W/ FILTER, UL 1449 LISTED, 7-MODE PROTECTION, 5 nSEC RESPONSE HARDWIRED TO NEW, 3 POLE, 30 AMP CIRCUIT BREAKER IN PANEL.

TVSS/2 — TRANSIENT VOLTAGE SURGE SUPPRESSOR: DITEK MODEL DTG-120-208-3Y, 100,000 AMP RATED PER LEG WITH FILTER, UL 1449 LISTED, 7-MODE PROTECTION, MCOV 115% OF NOMINAL LINE VOLTAGE, HARDWIRED TO 3-POLE, 30 AMP. CIRCUIT BREAKER IN PANEL.

ELECTRICAL LOAD ANALYSIS

LIGHTING LOAD @ 125% (VA)				59,063
AREA (SQ FT)	13,500	x3.5 =	47,250	
CONNECTED LIGHT LOAD VA			27,826	
LIGHTING VA			47,250	
RECEPTACLE LOAD (VA)				52,844
CONNECTED RECPT LOAD	95,688			
1st 10KVA @ 100%	10,000			
REMAINDER @ 50%	42,844			
GENERAL LOAD @ 100% (VA)				129,132
LARGEST MOTOR LOAD @ 125% (VA)				11,250
COOLING LOAD @ 100% (VA)				58,440
HEATING LOAD @ 100% (VA)				127,140
SPARE CAPACITY (VA) @		13 %		49,326
TOTAL SERVICE KVA				429
TOTAL SERVICE AMPS @	208	VOLTS		1,190

COOLING AND HEATING LOADS ARE NONCOINCIDENT. ONLY THE LARGEST IS USED IN SERVICE CALCULATION

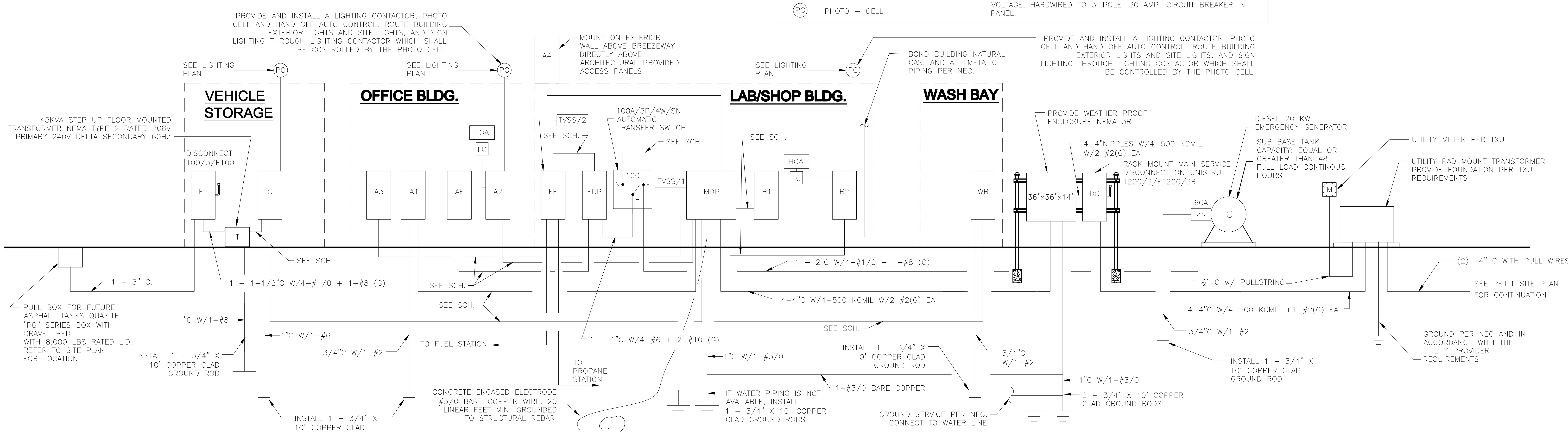

ELECTRICAL RISER DIAGRAM, LEGEND & LIGHTING SCHEDULE

NOTE: THIS DRAWING WAS CREATED FOR PRODUCTION ON 22" x 34" SHEET SIZE. DO NOT SCALE PRINTS.

CADFILE: T:\MNTFM\D02FTW\CBC4704-00-83702-77-47040083\Acad\proto\typical pal\waco\Acad\MEP\ELE\E3_1.dwg Plotted: Fri, Aug. 07, 2009 @ 1:28 PM By: MBAZAN

Texas Department of Transportation
125 E. 11th Street
Austin, Texas 78701-2483
(512) 416-3048

Copyright © 2005 Texas Department of Transportation

THIS DOCUMENT IS RELEASED FOR THE PURPOSE OF INFORMATION ONLY
NOT FOR REGULATORY APPROVAL, PERMITTING, OR CONSTRUCTION.

WACO AREA ENGINEER AND MAINTENANCE FACILITY
WACO, MCLENNAN COUNTY
WACO DISTRICT

Revisions

Drawn by: CON

Project No. CBC4704-00672

Date 05.21.2007

Sheet No. E3.1 of 15 E sheets

PANEL MDP 1200A MLO — ISOLATED GROUND BAR

SERVICE 120/208V,3ø,4 WIRE — PHASE — AIC 65,000 RMS — NEMA 1

CONDUIT & WIRE	CRT#	BKR/P	ITEM DESCRIPTION	AMPS	A	B	C	AMPS	ITEM DESCRIPTION	BKR/P	CRT#	CONDUIT & WIRE
	1			108	327			219			2	
1 - 2"C w / 4-#2/0+2-#6(G)EA	3	125/3	PANEL A1	111		326		216	PANEL B1	300/3	4	1 - 3"C w / 4-350 KCMIL+2-#4(G)EA
	5			75			238	163			6	
	7			193	262			70			8	
1 - 2 1/2"C w / 4-#4/0+2-#6(G)EA	9	200/3	PANEL A2	188		246		59	EDP (XFER SWITCH)	60/3	10	1 - 1 1/4"C w / 4-#4+2-#10(G)EA
	11			172			218	46			12	
	13			261	402			141			14	
2 - 2"C w / 4-#3/0+2-#3(G)EA	15	350/3	PANEL A3	261		390		129	PANEL C	200/3	16	2 - 2"C w / 4-#3/0+2-#3(G)EA
	17			261			384	123			18	
	19			137	223			86			20	
1 - 2"C w / 4-#3/0+2-#6(G)EA	21	200/3	PANEL A4	121		199		78	PANEL B2	125/3	22	1 - 2"C w / 4-#1/0+2-#8(G)EA
	23			137			217	80			24	
1 - 3/4"C w / 2-#12+1-#12(G)EA	25	20/1	EF-6	6	84			79			26	
1 - 3/4"C w / 2-#12+1-#12(G)EA	27	20/1	EF-7	6		90		84	PANEL WB	125/3	28	1 - 2"C w / 4-#3/0+1-#6(G)EA
1 - 3/4"C w / 2-#12+1-#12(G)EA	29	20/1	SIRENS/LIGHTS	3			40	37			30	
1 - 3/4"C w / 2-#12+1-#12(G)EA	31	20/1	GAS DETECTION CONSOLE	2	2			0			32	
1 - 1"C w / 4-#6+1-#10(G)EA	33	50/2	WELDER PLUG	40		40		0			34	
	35			40			40	0			36	
	37			0	0			0			38	
	39			0		0		0	TVSS	30/3	40	
	41			0			0	0			42	
				TOTAL	1,300	1,291	1,136					

CONTRACTOR SHALL SUPPLY APPROPRIATE FRAME RATING TO ACCOMMODATE FEEDER WIRE SIZE AND BRANCH CIRCUIT WIRES FOR ALL BEAKERS ON THIS PROJECT

PANEL A1 125 MCB — ISOLATED GROUND BAR

SERVICE 120/208V,3ø,4 WIRE — PHASE — AIC 22,000 RMS — NEMA 1

CONDUIT & WIRE	CRT#	BKR/P	ITEM DESCRIPTION	AMPS	A	B	C	AMPS	ITEM DESCRIPTION	BKR/P	CRT#	CONDUIT & WIRE
1 - 3/4"C w / 2-#12 + 1-#12(G)EA	1	20/1	EF-1	1.0	1.0			0.0	SPARE	20/1	2	
	3	20/1	SPARE	0.0		0.0		0.0	SPARE	20/1	4	
	5	20/1	SPARE	0.0			0.0	0.0	SPARE	20/1	6	
1 - 3/4"C w / 4-#10 + 1-#10(G)EA	7	20/2	EWH-30	22.0	32.8			10.8	ENG. INT. LIGHTS	20/1	8	1 - 3/4"C w / 2-#12 + 1-#12(G)EA
	9			22.0		34.5		12.5	ENG. INT. LIGHTS	20/1	10	1 - 3/4"C w / 2-#10 + 1-#10(G)EA
1 - 3/4"C w / 2-#12 + 1-#12(G)EA	11	20/1	OFFICE LIGHTS	10.0			18.3	8.3	ENG. INT. LIGHTS	20/1	12	1 - 3/4"C w / 2-#12 + 1-#12(G)EA
1 - 3/4"C w / 2-#12 + 1-#12(G)EA	13	20/1	MEETING RM LIGHTS	10.0	10.0			0.0	SPARE	20/1	14	
1 - 3/4"C w / 2-#12 + 1-#12(G)EA	15	20/1	OFFICE LIGHTS	9.5		12.5		3.0	IG RECEPTACLES	20/1	16	1 - 3/4"C w / 2-#12 + 2-#12(G)EA
	17	20/1	SPARE	0.0			15.0	15.0	RECEPTACLES	20/1	18	1 - 3/4"C w / 2-#10 + 1-#10(G)EA
1 - 3/4"C w / 2-#12 + 2-#12(G)EA	19	20/1	IG RECEPTACLES	3.0	18.0			15.0	RECEPTACLES	20/1	20	1 - 3/4"C w / 2-#10 + 1-#10(G)EA
1 - 3/4"C w / 2-#12 + 2-#12(G)EA	21	20/1	IG RECEPTACLES	4.5		9.0		4.5	IG RECEPTACLES	20/1	22	1 - 3/4"C w / 2-#12 + 2-#12(G)EA
	23	20/1	SPARE	0.0			3.0	3.0	RECEPTACLES	20/1	24	1 - 3/4"C w / 2-#12 + 1-#12(G)EA
1 - 3/4"C w / 2-#12 + 1-#12(G)EA	25	20/1	RECEPTACLES	4.5	9.0			4.5	IG RECEPTACLES	20/1	26	1 - 3/4"C w / 2-#12 + 2-#12(G)EA
1 - 3/4"C w / 2-#12 + 1-#12(G)EA	27	20/1 **	EWC	10.0		16.0		6.0	RECEPTACLES	20/1	28	1 - 3/4"C w / 2-#12 + 1-#12(G)EA
1 - 3/4"C w / 2-#12 + 1-#12(G)EA	29	20/1	RECEPTACLES	6.0			10.5	4.5	RECEPTACLES	20/1	30	1 - 3/4"C w / 2-#12 + 1-#12(G)EA
1 - 3/4"C w / 2-#12 + 2-#12(G)EA	31	20/1	IG RECEPTACLES	3.0	18.0			15.0	RECEPTACLES	20/1	32	1 - 3/4"C w / 2-#10 + 1-#10(G)EA
1 - 3/4"C w / 2-#12 + 1-#12(G)EA	33	20/1	RECEPTACLES	9.0		24.0		15.0	RECEPTACLES	20/1	34	1 - 3/4"C w / 2-#10 + 1-#10(G)EA
1 - 3/4"C w / 2-#12 + 1-#12(G)EA	35	20/1	RECEPTACLES	4.5			19.5	15.0	RECEPTACLES	20/1	36	1 - 3/4"C w / 2-#10 + 1-#10(G)EA
1 - 3/4"C w / 2-#12 + 2-#12(G)EA	37	20/1	IG RECEPTACLES	4.5	19.5			15.0	RECEPTACLES	20/1	38	1 - 3/4"C w / 2-#10 + 1-#10(G)EA
1 - 3/4"C w / 2-#12 + 2-#12(G)EA	39	20/1	IG RECEPTACLES	4.5		14.5		10.0	REFRIGERATOR	20/1	40	1 - 3/4"C w / 2-#12 + 1-#12(G)EA
1 - 3/4"C w / 2-#12 + 1-#12(G)EA	41	20/1	RECEPTACLES	4.5			9.0	4.5	RECEPTACLES	20/1	42	1 - 3/4"C w / 2-#12 + 1-#12(G)EA
				TOTAL	108.3	110.5	75.3					

** GFCI BREAKER

PANEL A2 200 MCB — ISOLATED GROUND BAR

SERVICE 120/208V,3ø,4 WIRE — PHASE — AIC 22,000 RMS — NEMA 1

CONDUIT & WIRE	CRT#	BKR/P	ITEM DESCRIPTION	AMPS	A	B	C	AMPS	ITEM DESCRIPTION	BKR/P	CRT#	CONDUIT & WIRE
E2.4 MOD. FURN. WIRE STANDARD	1	20/1	MODULAR FURNITURE	15.0	30.0			15.0	MODULAR FURNITURE	20/1	2	E2.4 MOD. FURN. WIRE STANDARD
E2.4 MOD. FURN. WIRE STANDARD	3	20/1	MODULAR FURNITURE	15.0		30.0		15.0	MODULAR FURNITURE	20/1	4	E2.4 MOD. FURN. WIRE STANDARD
E2.4 MOD. FURN. WIRE STANDARD	5	20/1	MODULAR FURNITURE	15.0			30.0	15.0	MODULAR FURNITURE	20/1	6	E2.4 MOD. FURN. WIRE STANDARD
E2.4 MOD. FURN. WIRE STANDARD	7	20/1	IG MOD FURNITURE	15.0	30.0			15.0	IG MOD FURNITURE	20/1	8	E2.4 MOD. FURN. WIRE STANDARD
E2.4 MOD. FURN. WIRE STANDARD	9	20/1	MODULAR FURNITURE	15.0		30.0		15.0	MODULAR FURNITURE	20/1	10	E2.4 MOD. FURN. WIRE STANDARD
E2.4 MOD. FURN. WIRE STANDARD	11	20/1	MODULAR FURNITURE	15.0			30.0	15.0	MODULAR FURNITURE	20/1	12	E2.4 MOD. FURN. WIRE STANDARD
E2.4 MOD. FURN. WIRE STANDARD	13	20/1	MODULAR FURNITURE	15.0	30.0			15.0	MODULAR FURNITURE	20/1	14	E2.4 MOD. FURN. WIRE STANDARD
E2.4 MOD. FURN. WIRE STANDARD	15	20/1	IG MOD FURNITURE	15.0		30.0		15.0	IG MOD FURNITURE	20/1	16	E2.4 MOD. FURN. WIRE STANDARD
E2.4 MOD. FURN. WIRE STANDARD	17	20/1	MODULAR FURNITURE	15.0			30.0	15.0	MODULAR FURNITURE	20/1	18	E2.4 MOD. FURN. WIRE STANDARD
E2.4 MOD. FURN. WIRE STANDARD	19	20/1	MODULAR FURNITURE	15.0	30.0			15.0	MODULAR FURNITURE	20/1	20	E2.4 MOD. FURN. WIRE STANDARD
E2.4 MOD. FURN. WIRE STANDARD	21	20/1	MODULAR FURNITURE	15.0		30.0		15.0	MODULAR FURNITURE	20/1	22	E2.4 MOD. FURN. WIRE STANDARD
E2.4 MOD. FURN. WIRE STANDARD	23	20/1	IG MOD FURNITURE	15.0			30.0	15.0	IG MOD FURNITURE	20/1	24	E2.4 MOD. FURN. WIRE STANDARD
E2.4 MOD. FURN. WIRE STANDARD	25	20/1	MODULAR FURNITURE	15.0	30.8			15.8	EXT. BLDG. LIGHTS	20/1	26	1 - 3/4"C w / 2-#8 + 1-#10(G)EA
E2.4 MOD. FURN. WIRE STANDARD	27	20/1	MODULAR FURNITURE	15.0		25.5		10.5	EXT. BLDG. LIGHTS	20/1	28	1 - 3/4"C w / 2-#10 + 1-#10(G)EA
E2.4 MOD. FURN. WIRE STANDARD	29	20/1	MODULAR FURNITURE	15.0			15.0	0.0	SPARE	20/1	30	
E2.4 MOD. FURN. WIRE STANDARD	31	20/1	IG MOD FURNITURE	15.0	16.0			1.0	ROAD ENTRY SIGN LIGHTS	*20/2	32	1 - 3/4"C w / 2-#12 + 1-#12(G)EA
E2.4 MOD. FURN. WIRE STANDARD	33	20/1	MODULAR FURNITURE	15.0		16.0		1.0			34	
E2.4 MOD. FURN. WIRE STANDARD	35	20/1	MODULAR FURNITURE	15.0			26.0	11.0	AREA SITE LIGHTING	*20/2	36	1 - 3/4"C w / 2-#8 + 1-#10(G)EA
E2.4 MOD. FURN. WIRE STANDARD	37	20/1	MODULAR FURNITURE	15.0	26.0			11.0			38	
E2.4 MOD. FURN. WIRE STANDARD	39	20/1	IG MOD FURNITURE	15.0		26.0		11.0	AREA SITE LIGHTING	*20/2	40	1 - 3/4"C w / 2-#8 + 1-#10(G)EA
	41	20/1	SPARE	0.0			11.0	11.0			42	
				TOTAL	192.8	187.5	172.0					

*PROVIDE A CIRCUIT BREAKER CAPABLE OF BEING LOCKED IN THE OPEN POSITION

PANEL A3 350 MCB — ISOLATED GROUND BAR

SERVICE 120/208V,3ø,4 WIRE — PHASE — AIC 22,000 RMS — NEMA 1

CONDUIT & WIRE	CRT#	BKR/P	ITEM DESCRIPTION	AMPS	A	B	C	AMPS	ITEM DESCRIPTION	BKR/P	CRT#	CONDUIT & WIRE
	1			44.0	89.0			45.0			2	
1 - 1"C w / 4-#6 + 1-#10(G)EA	3	45/3	AHU-1	44.0		89.0		45.0	AHU-2	45/3	4	1 - 1"C w / 4-#6 + 1-#10(G)EA
	5			44.0			89.0	45.0			6	
	7			37.0	82.0			45.0			8	
1 - 3/4"C w / 4-#8 + 1-#10(G)EA	9	40/3	AHU-3	37.0		82.0		45.0	AHU-4	45/3	10	1 - 1"C w / 4-#6 + 1-#10(G)EA
	11			37.0			82.0	45.0			12	
	13			45.0	90.0			45.0			14	
1 - 1"C w / 4-#6 + 1-#10(G)EA	15	45/3	AHU-5	45.0		90.0		45.0	AHU-6	45/3	16	1 - 1"C w / 4-#6 + 1-#10(G)EA
	17			45.0			90.0	45.0			18	
	19			0.0	0.0			0.0			20	
	21	40/3	SPARE	0.0		0.0		0.0	SPARE	45/3	22	
	23			0.0			0.0	0.0			24	
	25		SPACE	0.0	0.0			0.0	SPACE		26	
	27		SPACE	0.0		0.0		0.0	SPACE		28	
	29		SPACE	0.0			0.0	0.0	SPACE		30	
	31			0.0	0.0			0.0			32	
	33			0.0		0.0		0.0			34	
	35			0.0			0.0	0.0			36	
	37			0.0	0.0			0.0			38	
	39			0.0		0.0		0.0			40	
	41			0.0			0.0	0.0			42	
				TOTAL	261.0	261.0	261.0					

CONTRACTOR SHALL SUPPLY APPROPRIATE FRAME RATING TO ACCOMMODATE FEEDER WIRE SIZE AND BRANCH CIRCUIT WIRES FOR ALL BEAKERS ON THIS PROJECT

PANEL A4 200 MCB — ISOLATED GROUND BAR

SERVICE 120/208V,3ø,4 WIRE — PHASE — AIC 22,000 RMS — NEMA 3R

CONDUIT & WIRE	CRT#	BKR/P	ITEM DESCRIPTION	AMPS	A	B	C	AMPS	ITEM DESCRIPTION	BKR/P	CRT#	CONDUIT & WIRE
	1			16.0	27.0			11.0			2	
1 - 3/4"C w / 4-#10 + 1-#10(G)EA	3	25/3	HP-1	16.0		27.0		11.0	HP-2	15/3	4	1 - 3/4"C w / 4-#12 + 1-#12(G)EA
	5			16.0			27.0	11.0			6	
	7			9.0	32.0			23.0			8	
1 - 3/4"C w / 4-#12 + 1-#12(G)EA	9	15/3	HP-3	9.0		32.0		23.0	HP-4	40/3	10	1 - 3/4"C w / 4-#8 + 1-#10(G)EA
	11			9.0			32.0	23.0			12	
	13			23.0	46.0			23.0			14	
1 - 3/4"C w / 4-#8 + 1-#10(G)EA	15	40/3	HP-5	23.0		46.0		23.0	HP-6	40/3	16	1 - 3/4"C w / 4-#8 + 1-#10(G)EA
	17			23.0			46.0	23.0			18	
	19			16.0	32.0			16.0			20	
	21			0.0		16.0		16.0	HP-7	25/3	22	1 - 3/4"C w / 4-#10 + 1-#10(G)EA
	23			16.0			32.0	16.0			24	
	25			0.0	0.0			0.0			26	
	27	15/2	SPARE	0.0		0.0		0.0			28	
	29			0.0			0.0	0.0			30	
	31			0.0	0.0			0.0			32	
	33			0.0		0.0		0.0			34	
	35			0.0			0.0	0.0			36	
	37			0.0	0.0			0.0			38	
	39			0.0		0.0		0.0			40	
	41			0.0			0.0	0.0			42	
				TOTAL	137.0	121.0	137.0					

CONTRACTOR SHALL SUPPLY APPROPRIATE FRAME RATING TO ACCOMMODATE FEEDER WIRE SIZE AND BRANCH CIRCUIT WIRES FOR ALL BEAKERS ON THIS PROJECT

PANEL B1 300 MCB — ISOLATED GROUND KIT

SERVICE 120/208V,3ø,4 WIRE — PHASE — AIC 22,000 RMS — NEMA 1

CONDUIT & WIRE	CRT#	BKR/P	ITEM DESCRIPTION	AMPS	A	B	C	AMPS	ITEM DESCRIPTION	BKR/P	CRT#	CONDUIT & WIRE
1 - 3/4"C w / 2-#10 + 1-#10(G)EA	1	30/2	EWH-65	22.0	62.0			40.0	IGNITION OVEN	50/2	2	1 - 3/4"C w / 3-#6 + 1-#10(G)EA
	3			22.0		62.0		40.0			4	
1 - 3/4"C w / 2-#12 + 1-#12(G)EA	5	20/1	LAB LIGHTS	9.7			9.7	0.0	SPARE	20/1	6	
1 - 3/4"C w / 2-#12 + 1-#12(G)EA	7	20/1	SHOP HALL LIGHTS	4.3	11.3			7.0	INT. LIGHTS	20/1	8	1 - 3/4"C w / 2-#12 + 1-#12(G)EA
1 - 3/4"C w / 2-#12 + 1-#12(G)EA	9	20/1	CREW RM LIGHTS	5.0		9.7		4.7	MAT. STRG. LIGHTS	20/1	10	1 - 3/4"C w / 2-#12 + 1-#12(G)EA
1 - 3/4"C w / 2-#12 + 1-#12(G)EA	11	20/1	SHOP STG. LIGHTS	3.6			13.6	10.0	SHOP LIGHTS	20/1	12	1 - 3/4"C w / 2-#12 + 1-#12(G)EA
1 - 3/4"C w / 2-#12 + 1-#12(G)EA	13	20/1	SHOP LIGHTS	12.5	14.3			1.8	EF-10	15/1	14	1 - 3/4"C w / 2-#12 + 1-#12(G)EA
1 - 3/4"C w / 2-#12 + 1-#12(G)EA	15	20/1	RECEPTACLES	6.0		16.0		10.0	REFRIDGERATOR	20/1	16	1 - 3/4"C w / 2-#12 + 1-#12(G)EA
1 - 3/4"C w / 2-#12 + 1-#12(G)EA	17	20/1	RECEPTACLES	6.0			9.0	3.0	RECEPTACLES	20/1	18	1 - 3/4"C w / 2-#12 + 1-#12(G)EA
1 - 3/4"C w / 2-#12 + 1-#12(G)EA	19	20/1	RECEPTACLES	3.0	6.0			3.0	RECEPTACLES	20/1	20	1 - 3/4"C w / 2-#12 + 1-#12(G)EA
1 - 3/4"C w / 2-#12 + 1-#12(G)EA	21	20/1	RECEPTACLES	4.5		8.9		4.4	EF-8	15/1	22	1 - 3/4"C w / 2-#12 + 1-#12(G)EA
1 - 3/4"C w / 2-#12 + 1-#12(G)EA	23	20/1	RECEPTACLES	4.5			11.0	6.5	EF-11 / EF-12	20/1	24	1 - 3/4"C w / 2-#12 + 1-#12(G)EA
1 - 3/4"C w / 2-#12 + 1-#12(G)EA	25	**20/1	EWC	5.0	20.0			15.0	ICE MAKER	20/1	26	1 - 3/4"C w / 2-#12 + 1-#12(G)EA
1 - 3/4"C w / 2-#12 + 1-#12(G)EA	27	20/1	HTR-5	4.0		48.0		44.0			28	
1 - 3/4"C w / 2-#12 + 1-#12(G)EA	29	20/1	RECEPTACLES	4.5			48.5	44.0	AHU-7	45/3	30	1 - 1"C w / 4-#6 + 1-#10(G)EA
1 - 3/4"C w / 2-#12 + 1-#12(G)EA	31	20/1	EF-9	1.0	45.0			44.0			32	
	33	20/1	SPARE	0.0		11.0		11.0	CU-2 / AC-2	15/2	34	1 - 3/4"C w / 3-#12 + 1-#12(G)EA
	35	20/1	SPARE	0.0			11.0	11.0			36	
	37			44.0	60.0			16.0			38	
1 - 1"C w / 4-#6 + 1-#10(G)EA	39	45/3	AHU-8	44.0		60.0		16.0	HP-8	25/3	40	1 - 3/4"C w / 4-#8 + 1-#10(G)EA
	41			44.0			60.0	16.0			42	
				TOTAL	218.6	215.6	162.8					

** GFCI BREAKER

CONTRACTOR SHALL SUPPLY APPROPRIATE FRAME RATING TO ACCOMMODATE FEEDER WIRE SIZE AND BRANCH CIRCUIT WIRES FOR ALL BEAKERS ON THIS PROJECT

PANEL B2 125 MCB — ISOLATED GROUND KIT

SERVICE 120/208V,3ø,4 WIRE — PHASE — AIC 10,000 RMS — NEMA 1

CONDUIT & WIRE	CRT#	BKR/P	ITEM DESCRIPTION	AMPS	A	B	C	AMPS	ITEM DESCRIPTION	BKR/P	CRT#	CONDUIT & WIRE
1 - 3/4"C w / 2-#12 + 1-#12(G)EA	1	20/1	RECEPTACLES	4.5	4.5			0.0	SPARE	20/1	2	
	3	20/1	SPARE	0.0		0.0		0.0	SPARE	20/1	4	
	5	20/1	SPARE	0.0			0.0	0.0	SPARE	20/1	6	
	7	20/1	SPARE	0.0	1.5			1.5	RECEPTACLES	20/1	8	1 - 3/4"C w / 2-#12 + 1-#12(G)EA
	9	20/1	SPARE	0.0		1.5		1.5	RECEPTACLES	20/1	10	1 - 3/4"C w / 2-#12 + 1-#12(G)EA
1 - 3/4"C w / 2-#12 + 1-#12(G)EA	11	15/1	EF-2	5.8			7.3	1.5	RECEPTACLES	20/1	12	1 - 3/4"C w / 2-#12 + 1-#12(G)EA
1 - 3/4"C w / 2-#12 + 1-#12(G)EA	13	15/1	EF-3	5.8	8.8			3.0	RECEPTACLES	20/1	14	1 - 3/4"C w / 2-#12 + 1-#12(G)EA
1 - 3/4"C w / 2-#12 + 1-#12(G)EA	15	20/1	EF-4&5	11.6		13.1		1.5	RECEPTACLES	20/1	16	1 - 3/4"C w / 2-#12 + 1-#12(G)EA
1 - 3/4"C w / 2-#12 + 1-#12(G)EA	17	25/1	EF-V	13.8			15.3	1.5	RECEPTACLES	20/1	18	1 - 3/4"C w / 2-#12 + 1-#12(G)EA
1 - 3/4"C w / 2-#12 + 1-#12(G)EA	19	25/1	EF-WW	12.8	14.3			1.5	RECEPTACLES	20/1	20	1 - 3/4"C w / 2-#12 + 1-#12(G)EA
1 - 3/4"C w / 2-#12 + 1-#12(G)EA	21	20/1	RECEPTACLES	6.0		7.5		1.5	RECEPTACLES	20/1	22	1 - 3/4"C w / 2-#12 + 1-#12(G)EA
1 - 3/4"C w / 2-#12 + 1-#12(G)EA	23	15/1	HTR-2	4.0			5.5	1.5	RECEPTACLES	20/1	24	1 - 3/4"C w / 2-#12 + 1-#12(G)EA
1 - 3/4"C w / 2-#12 + 1-#12(G)EA	25	15/1	HTR-1,3,4	12.0	19.5			7.5	RECEPTACLES	20/1	26	1 - 3/4"C w / 2-#12 + 1-#12(G)EA
1 - 3/4"C w / 2-#12 + 1-#12(G)EA	27	20/1	EXT. LIGHTS	8.8		13.3		4.5	RECEPTACLES	20/1	28	1 - 3/4"C w / 2-#12 + 1-#12(G)EA
1 - 3/4"C w / 2-#10 + 1-#10(G)EA	29	20/1	EXT. LIGHTS	10.5			15.0	4.5	RECEPTACLES	20/1	30	1 - 3/4"C w / 2-#12 + 1-#12(G)EA
	31	20/1	SPARE	0.0	6.0			6.0	RECEPTACLES	20/1	32	1 - 3/4"C w / 2-#12 + 1-#12(G)EA
1 - 3/4"C w / 2-#12 + 1-#12(G)EA	33	20/1	CANOPY LIGHTS	3.0		7.5		4.5	RECEPTACLES	20/1	34	1 - 3/4"C w / 2-#12 + 1-#12(G)EA
	35	20/1	SPARE	0.0			1.5	1.5	RECEPTACLES	20/1	36	1 - 3/4"C w / 2-#12 + 1-#12(G)EA
	37			25.0	31.0			6.0	RECEPTACLES	20/1	38	1 - 3/4"C w / 2-#12 + 1-#12(G)EA
1 - 3/4"C w / 3-#10 + 1-#10(G)EA	39	50/3	AIR COMPRESSOR	25.0		35.0		10.0	RECEPTACLES	20/1	40	1 - 3/4"C w / 2-#12 + 1-#12(G)EA
	41			25.0			35.0	10.0	RECEPTACLES	20/1	42	1 - 3/4"C w / 2-#12 + 1-#12(G)EA
				TOTAL	85.6	77.9	79.6					

CONTRACTOR SHALL SUPPLY APPROPRIATE FRAME RATING TO ACCOMMODATE FEEDER WIRE SIZE AND BRANCH CIRCUIT WIRES FOR ALL BEAKERS ON THIS PROJECT

PANEL C 200 MCB

SERVICE 120/208V,3ø,4 WIRE — PHASE — AIC 10,000 RMS — NEMA 1

CONDUIT & WIRE	CRT#	BKR/P	ITEM DESCRIPTION	AMPS	A	B	C	AMPS	ITEM DESCRIPTION	BKR/P	CRT#	CONDUIT & WIRE
1 - 3/4"C w / 2-#12 + 1-#12(G)EA	1	20/1	INT. LIGHTS	8.6	17.2			8.6	INT. LIGHTS	20/1	2	1 - 3/4"C w / 2-#12 + 1-#12(G)EA
1 - 3/4"C w / 2-#12 + 1-#12(G)EA	3	20/1	EXT. LIGHTS	7.0		14.0		7.0	EXT. LIGHTS	20/1	4	1 - 3/4"C w / 2-#12 + 1-#12(G)EA
1 - 3/4"C w / 2-#12 + 1-#12(G)EA	5	20/1	RECEPTACLES	3.0			7.5	4.5	RECEPTACLES	20/1	6	1 - 3/4"C w / 2-#12 + 1-#12(G)EA
1 - 3/4"C w / 2-#12 + 1-#12(G)EA	7	20/1	RECEPTACLES	4.5	9.0			4.5	RECEPTACLES	20/1	8	1 - 3/4"C w / 2-#12 + 1-#12(G)EA
	9	20/1	SPARE	0.0		0.0		0.0	SPARE	20/1	10	
	11	20/1	SPARE	0.0			0.0	0.0	SPARE	20/1	12	
	13	20/1	SPARE	0.0	0.0			0.0	SPARE	20/1	14	
	15	20/1	SPARE	0.0		0.0		0.0	SPARE	20/1	16	
	17		SPACE	0.0			0.0	0.0	SPACE		18	
	19		ASPHALT	115.0	115.0			0.0	SPACE		20	
1 - 1 1/2"C w / 4-#1/0 + 1-#8(G)EA	21	150/3	FLOOR MOUNTED	115.0		115.0		0.0	SPACE		22	
	23		DRY CELL TRANSFORMER	115.0			115.0	0.0	SPACE		24	
	25			0.0	0.0			0.0			26	
	27			0.0		0.0		0.0			28	
	29			0.0			0.0	0.0			30	
	31			0.0	0.0			0.0			32	
	33			0.0		0.0		0.0			34	
	35			0.0			0.0	0.0			36	
	37			0.0	0.0			0.0			38	
	39			0.0		0.0		0.0			40	
	41			0.0			0.0	0.0			42	
				TOTAL	141.2	129.0	122.5					

CONTRACTOR SHALL SUPPLY APPROPRIATE FRAME RATING TO ACCOMMODATE FEEDER WIRE SIZE AND BRANCH CIRCUIT WIRES FOR ALL BEAKERS ON THIS PROJECT

ELECTRICAL PANELBOARD SCHEDULES - 1

NOTE: THIS DRAWING WAS CREATED FOR PRODUCTION ON 22" x 34" SHEET SIZE. DO NOT SCALE PRINTS.

Texas Department of Transportation
125 E. 11th Street
Austin, Texas 78701-2483
(512) 416-[illegible]

Copyright © 2005 Texas Department of Transportation

THIS DOCUMENT IS RELEASED FOR THE PURPOSE OF
INFORMATION ONLY
NOT FOR REGULATORY
APPROVAL, PERMITTING,
OR CONSTRUCTION.

WACO AREA ENGINEER
AND MAINTENANCE FACILITY
WACO, MCLENNAN COUNTY
WACO DISTRICT

Revisions

Drawn by: CON
Project No. CBC4704-00672
Date 05.21.2007
Sheet No.

E4.1

of 15 E sheets

CADFILE: [illegible] Plotted: Fri, Aug. 07, 2009 @ 1:27 PM By: MBAZAN

PANEL WB 125 MCB

SERVICE 120/208V,3ø,4 WIRE — PHASE — AIC 22,000 RMS — NEMA 1

CONDUIT & WIRE	CRT#	BKR/P	ITEM DESCRIPTION	AMPS	A	B	C	AMPS	ITEM DESCRIPTION	BKR/P	CRT#	CONDUIT & WIRE
1 - 3/4"C w / 3-#12 + 1-#12(G)EA	1	20/2	RS-I	16.0	28.5			12.5	HTR	20/1	2	1 - 3/4"C w / 2-#12 + 1-#12(G)EA
	3			16.0		25.9		9.9	O/S LGTS	20/1	4	1 - 3/4"C w / 2-#12 + 1-#12(G)EA
1 - 3/4"C w / 3-#12 + 1-#12(G)EA	5	20/2	RS-I	5.0			20.0	15.0	LGTS	20/1	6	1 - 3/4"C w / 2-#12 + 1-#12(G)EA
	7			5.0	7.0			2.0	RS-1	20/1	8	1 - 3/4"C w / 2-#12 + 1-#12(G)EA
1 - 3/4"C w / 3-#10 + 1-#10(G)EA	9	30/2	AIR COMPRESSOR	15.0		17.3		2.3	LGTS	20/1	10	1 - 3/4"C w / 2-#12 + 1-#12(G)EA
	11			15.0			16.5	1.5	RECEPTACLE	20/1	12	1 - 3/4"C w / 2-#12 + 1-#12(G)EA
1 - 3/4"C w / 2-#6 + 1-#10(G)EA	13	50/2	PRESSURE WASHER	40.0	43.0			3.0	RECEPTACLE	20/1	14	1 - 3/4"C w / 2-#12 + 1-#12(G)EA
	15			40.0		41.0		1.0	RS-1	20/1	16	1 - 3/4"C w / 2-#12 + 1-#12(G)EA
	17	30/2	SPARE	0.0			0.0	0.0	SPARE	20/1	18	
	19			0.0	0.0			0.0	SPARE	20/1	20	
	21		SPACE	0.0		0.0		0.0	SPARE	20/1	22	
	23		SPACE	0.0			0.0	0.0	SPACE		24	
	25		SPACE	0.0	0.0			0.0	SPACE		26	
	27		SPACE	0.0		0.0		0.0	SPACE		28	
	29		SPACE	0.0			0.0	0.0	SPACE		30	
	31			0.0	0.0			0.0			32	
	33			0.0		0.0		0.0			34	
	35			0.0			0.0	0.0			36	
	37			0.0	0.0			0.0			38	
	39			0.0		0.0		0.0			40	
	41			0.0			0.0	0.0			42	
				TOTAL	78.5	84.2	36.5					

CONTRACTOR SHALL SUPPLY APPROPRIATE FRAME RATING TO ACCOMMODATE FEEDER WIRE SIZE AND BRANCH CIRCUIT WIRES FOR ALL BEAKERS ON THIS PROJECT

PANEL EDP 60 MCB — ISOLATED GROUND BAR

SERVICE 120/208V,3ø,4 WIRE — PHASE — AIC 22,000 RMS — NEMA 1

CONDUIT & WIRE	CRT#	BKR/P	ITEM DESCRIPTION	AMPS	A	B	C	AMPS	ITEM DESCRIPTION	BKR/P	CRT#	CONDUIT & WIRE
1 - 3/4"C w / 4-#8 + 1-#10(G)EA	1	40/3	PANEL FE	34.0	60.0			26.0	PANEL AE	40/3	2	1 - 1 1/4"C w / 4-#4 + 2-#10(G)EA
	3			22.5		56.5		34.0			4	
	5			24.5			46.0	21.5			6	
1 - 3/4"C w / 2-#10 + 1-#10(G)EA	7	20/1	GEN SET HEATER	5.0	9.5			4.5	IG-RECEPTACLES	20/1	8	1 - 3/4"C w / 2-#12 + 2-#12(G)EA
1 - 3/4"C w / 2-#12 + 1-#12(G)EA	9	20/1	GEN SET CHARGER	2.0		2.0		0.0			10	
	11			0.0			0.0	0.0			12	
	13			0.0	0.0			0.0			14	
	15			0.0		0.0		0.0			16	
	17			0.0			0.0	0.0			18	
	19			0.0	0.0			0.0			20	
	21			0.0		0.0		0.0			22	
	23			0.0			0.0	0.0			24	
	25			0.0	0.0			0.0			26	
	27			0.0		0.0		0.0			28	
	29			0.0			0.0	0.0			30	
	31			0.0	0.0			0.0			32	
	33			0.0		0.0		0.0			34	
	35			0.0			0.0	0.0			36	
	37			0.0	0.0			0.0			38	
	39			0.0		0.0		0.0			40	
	41			0.0			0.0	0.0			42	
				TOTAL	69.5	58.5	46.0					

CONTRACTOR SHALL SUPPLY APPROPRIATE FRAME RATING TO ACCOMMODATE FEEDER WIRE SIZE AND BRANCH CIRCUIT WIRES FOR ALL BEAKERS ON THIS PROJECT

PANEL AE 40A MCB — ISOLATED GROUND BAR

SERVICE 120/208V,3ø,4 WIRE — PHASE — AIC 10,000 RMS — NEMA 1

CONDUIT & WIRE	CRT#	BKR/P	ITEM DESCRIPTION	AMPS	A	B	C	AMPS	ITEM DESCRIPTION	BKR/P	CRT#	CONDUIT & WIRE
	1	20/1	SPARE	0.0	3.0			3.0	IG-RECEPTACLES	20/1	2	1 - 3/4"C w / 2-#12 + 2-#12(G)EA
E2.4 MOD. FURN. WIRE STANDARD	3	20/1	MODULAR FURNITURE	9.0		10.5		1.5	RECEPTACLE	20/1	4	1 - 3/4"C w / 2-#12 + 1-#12(G)EA
E2.4 MOD. FURN. WIRE STANDARD	5	20/1	MODULAR FURNITURE	9.0			10.5	1.5	IG-RECEPTACLES	20/1	6	1 - 3/4"C w / 2-#12 + 2-#12(G)EA
E2.4 MOD. FURN. WIRE STANDARD	7	20/1	MODULAR FURNITURE	9.0	12.0			3.0	IG-RECEPTACLES	20/1	8	1 - 3/4"C w / 2-#12 + 2-#12(G)EA
E2.4 MOD. FURN. WIRE STANDARD	9	20/1	IG MOD FURNITURE	9.0		9.0		0.0	SPARE	20/1	10	
	11			0.0			11.0	11.0	CU-1 / AC-1	15/2	12	1 - 3/4"C w / 2-#12 + 1-#12(G)EA
	13			0.0	11.0			11.0			14	
1 - 3/4"C w / 2-#10 + 1-#10(G)EA	15	20/1	INT. LIGHTS	14.5		14.5		0.0			16	
	17			0.0			0.0	0.0			18	
	19			0.0	0.0			0.0			20	
	21			0.0		0.0		0.0			22	
	23			0.0			0.0	0.0			24	
	25			0.0	0.0			0.0			26	
	27			0.0		0.0		0.0			28	
	29			0.0			0.0	0.0			30	
	31			0.0	0.0			0.0			32	
	33			0.0		0.0		0.0			34	
	35			0.0			0.0	0.0			36	
	37			0.0	0.0			0.0			38	
	39			0.0		0.0		0.0			40	
	41			0.0			0.0	0.0			42	
				TOTAL	26.0	34.0	21.5					

CONTRACTOR SHALL SUPPLY APPROPRIATE FRAME RATING TO ACCOMMODATE FEEDER WIRE SIZE AND BRANCH CIRCUIT WIRES FOR ALL BEAKERS ON THIS PROJECT

PANEL FE 40 MCB

SERVICE 120/208V,3ø,4 WIRE — PHASE — AIC 10,000 RMS — NEMA 1

CONDUIT & WIRE	CRT#	BKR/P	ITEM DESCRIPTION	AMPS	A	B	C	AMPS	ITEM DESCRIPTION	BKR/P	CRT#	CONDUIT & WIRE
1 - 3/4"C w / 3-#12 + 1-#12(G)EA	1	*20/2	DIESEL PUMP	6.5	8.5			2.0	DIESEL DISPENSER	*20/1	2	1 - 3/4"C w / 2-#12 + 1-#12(G)EA
	3			6.5		6.5		0.0	SWITCHED NEUTRAL		4	
	5		SWITCHED NEUTRAL	0.0			0.0	0.0	SHUNT TRIP		6	
	7		SHUNT TRIP	0.0	2.0			2.0	GASOLINE DISPENSER	*20/1	8	1 - 3/4"C w / 2-#12 + 1-#12(G)EA
1 - 3/4"C w / 3-#12 + 1-#12(G)EA	9	*20/2	GASOLINE PUMP	6.5		6.5		0.0	SWITCHED NEUTRAL		10	
	11			6.5			6.5	0.0	SHUNT TRIP		12	
	13		SWITCHED NEUTRAL	0.0	2.0			2.0	SPARE	*20/1	14	1 - 3/4"C w / 2-#12 + 1-#12(G)EA
	15		SHUNT TRIP	0.0		0.0		0.0	SWITCHED NEUTRAL		16	
1 - 3/4"C w / 3-#10 + 1-#10(G)EA	17	*20/2	LPG FUEL STATION	12.0			12.0	0.0	SHUNT TRIP		18	
	19			12.0	12.0			0.0	SPACE		20	
	21		SWITCHED NEUTRAL	0.0		2.0		2.0	EPO / SHUNT TRIP CONTROL	20/1	22	1 - 3/4"C w / 2-#12 + 1-#12(G)EA
	23		SHUNT TRIP	0.0			5.0	5.0	TMS-2000	20/1	24	1 - 3/4"C w / 2-#10 + 3-#10(G)EA
	25	*20/2	SPARE	6.5	7.5			1.0	TVSS	30/3	26	
	27			6.5		7.5		1.0			28	
	29		SWITCHED NEUTRAL	0.0			1.0	1.0			30	
	31		SHUNT TRIP	0.0	0.0			0.0	FUTURE FUEL MGMT.	*20/1	32	
	33	*20/2	SPARE	0.0		0.0		0.0	SWITCHED NEUTRAL		34	
	35			0.0			0.0	0.0	SHUNT TRIP		36	
	37		SWICHED NEUTRAL	0.0	2.0			2.0	LC1002 ANNUNCIATOR	*20/1	38	1 - 3/4"C w / 2-#12 + 1-#12(G)EA
	39		SHUNT TRIP	0.0		0.0		0.0	SWITCHED NEUTRAL		40	
	41		SPACE	0.0			0.0	0.0	SHUNT TRIP		42	
				TOTAL	34.0	22.5	24.5					

*SWITCHED NEUTRAL CIRCUIT BREAKER W/ SHUNT TRI ACCESSORY

CONTRACTOR SHALL SUPPLY APPROPRIATE FRAME RATING TO ACCOMMODATE FEEDER WIRE SIZE AND BRANCH CIRCUIT WIRES FOR ALL BEAKERS ON THIS PROJECT

Texas Department of Transportation
125 E. 11th Street
Austin, Texas 78701-2483
(512) 416-3048
Copyright © 2005 Texas Department of Transportation

THIS DOCUMENT IS RELEASED FOR THE PURPOSE OF INFORMATION ONLY
NOT FOR REGULATORY APPROVAL, PERMITTING, OR CONSTRUCTION.

WACO AREA ENGINEER AND MAINTENANCE FACILITY

WACO, MCLENNAN COUNTY WACO DISTRICT

Revisions

△
△
△
△

Drawn by: CON

Project No. CBC4704-00672

Date 05.21.2007

Sheet No.

E4.2

of 15 E sheets

ELECTRICAL PANELBOARD SCHEDULES - 2

NOTE: THIS DRAWING WAS CREATED FOR PRODUCTION ON 22" x 34" SHEET SIZE. DO NOT SCALE PRINTS.

CADFILE: T:\MNTFMD02FTW\CBC4704-00-83702-77-470400837\cad\prototypical pdfs\waco\Acad\MEP\ELEC\E4_2.dwg Plotted: Fri. Aug. 07, 2009 @ 1:29 PM By: MBAZAN

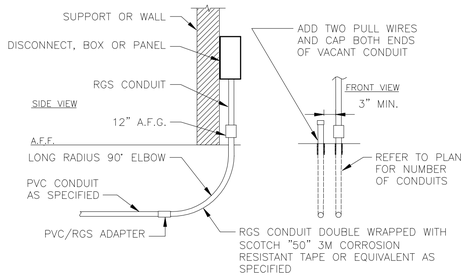

1 STUB UP TO SAFETY SWITCH AND/OR PANEL
SCALE: NOT TO SCALE

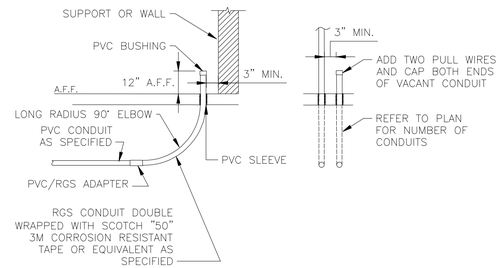

2 VOICE DATA STUB UP DETAIL
SCALE: NOT TO SCALE

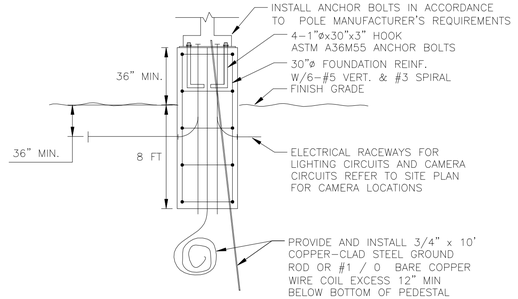

3 SHOE BOX LIGHT STANDARD PEDESTAL
SCALE: NOT TO SCALE

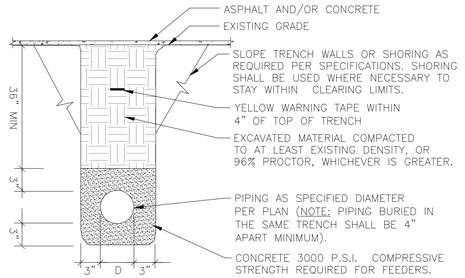

4 ELECTRICAL PAVED AREAS TYPICAL
SCALE: NOT TO SCALE

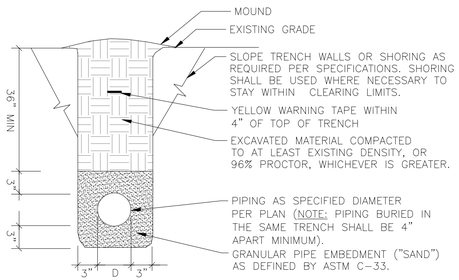

5 ELECTRICAL UNPAVED AREAS TYPICAL
SCALE: NOT TO SCALE

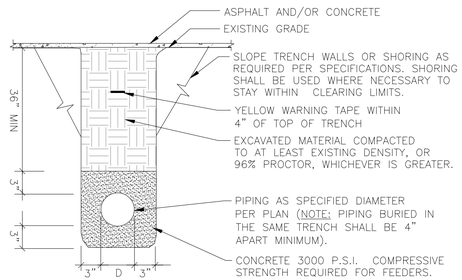

6 VOICE DATA PAVED AREAS TYPICAL
SCALE: NOT TO SCALE

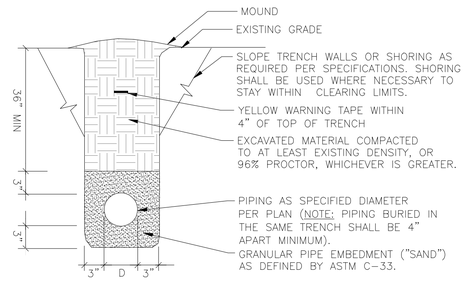

7 VOICE DATA UNPAVED AREAS TYPICAL
SCALE: NOT TO SCALE

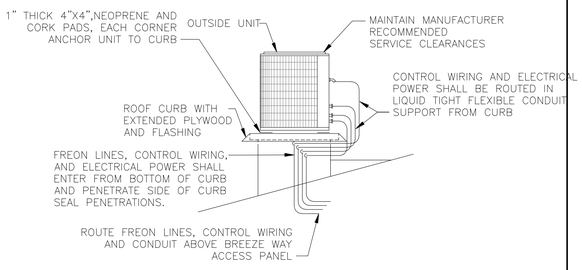

8 OUTSIDE UNIT ROOF CURB
SCALE: NOT TO SCALE

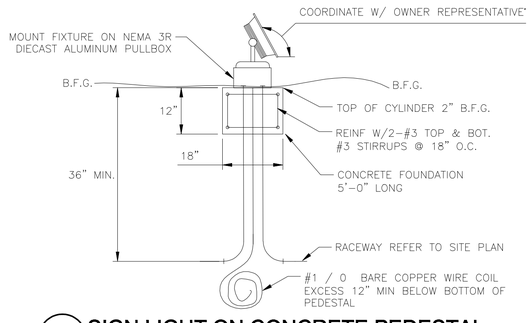

9 SIGN LIGHT ON CONCRETE PEDESTAL
SCALE: NOT TO SCALE

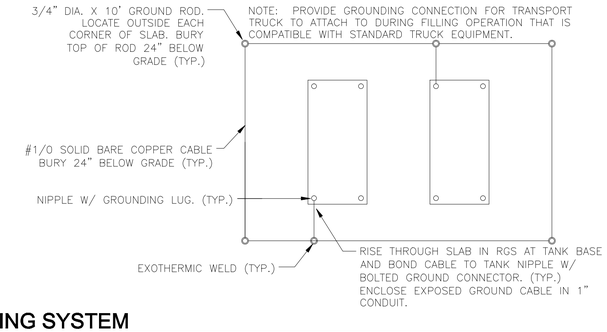

10 TANK GROUNDING SYSTEM
SCALE: NOT TO SCALE

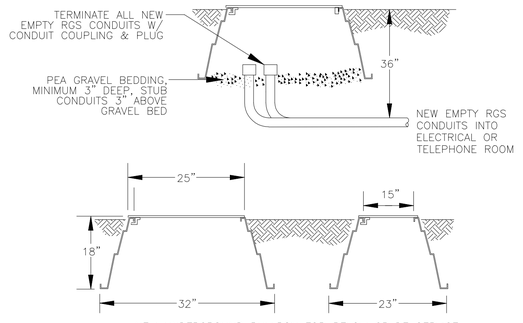

11 UNDERGROUND PULLBOX
SCALE: NOT TO SCALE

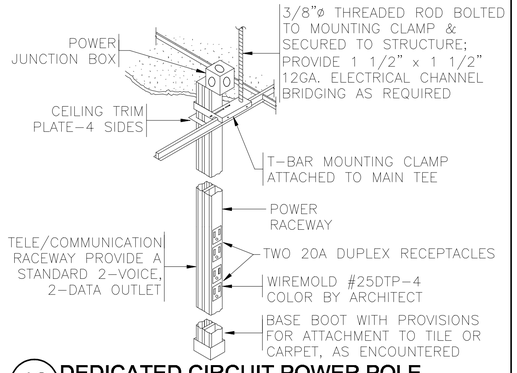

12 DEDICATED CIRCUIT POWER POLE
SCALE: NOT TO SCALE

ELECTRICAL DETAILS - 1

NOTE: THIS DRAWING WAS CREATED FOR PRODUCTION ON 22" x 34" SHEET SIZE. DO NOT SCALE PRINTS.

Texas Department of Transportation
125 E. 11th Street
Austin, Texas 78701-2483
(512) 416-3000

Copyright © 2005 Texas Department of Transportation

THIS DOCUMENT IS RELEASED FOR THE PURPOSE OF
INFORMATION ONLY
NOT FOR REGULATORY APPROVAL, PERMITTING, OR CONSTRUCTION.

WACO AREA ENGINEER AND MAINTENANCE FACILITY
WACO, MCLENNAN COUNTY
WACO DISTRICT

Revisions

Drawn by: CON
Project No. CBC4704-00672
Date 05.21.2007
Sheet No.

E5.1
of 15 E sheets

CADFILE: T:\MNTR\WD\02FTWCBC4704-00-05\102-77-47\400837\Acad\layout\layout pdf\sheets\Acad\MEP\ELEC\EL_1.dwg [Pltdet: Fri, Aug. 07, 2009 @ 1:29 PM By: MBAZAN

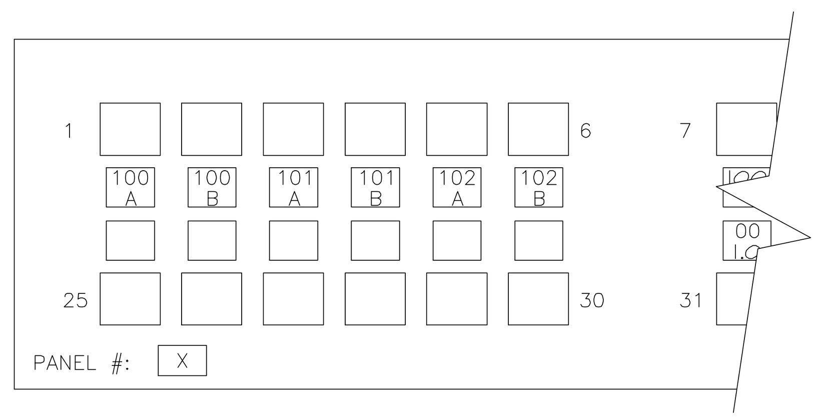

1 TYPICAL CATEGORY 5 PATCH PANEL LABELING
SCALE: NOT TO SCALE

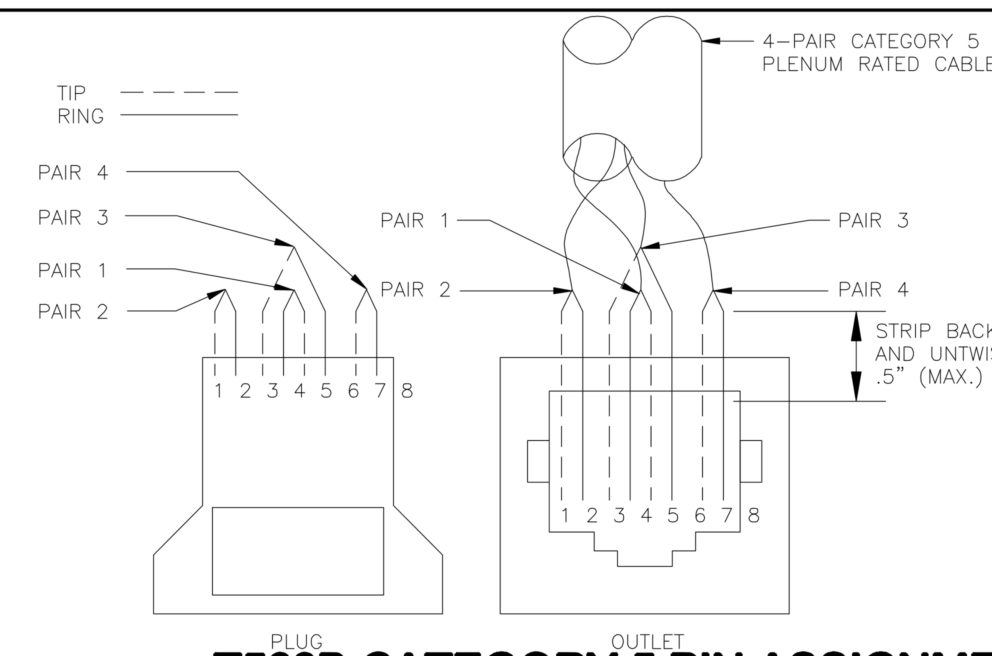

PAIR	COLOR
1	WHITE/BLUE
2	WHITE/ORANGE
3	WHITE/GREEN
4	WHITE/BROWN
5	WHITE/SLATE
6	RED/BLUE
7	RED/ORANGE
8	RED/GREEN
9	RED/BROWN
10	RED/SLATE
11	BLACK/BLUE
12	BLACK/ORANGE
13	BLACK/GREEN
14	BLACK/BROWN
15	BLACK/SLATE
16	YELLOW/BLUE
17	YELLOW/ORANGE
18	YELLOW/GREEN
19	YELLOW/BROWN
20	YELLOW/SLATE
21	VIOLET/BLUE
22	VIOLET/ORANGE
23	VIOLET/GREEN
24	VIOLET/BROWN
25	VIOLET/SLATE

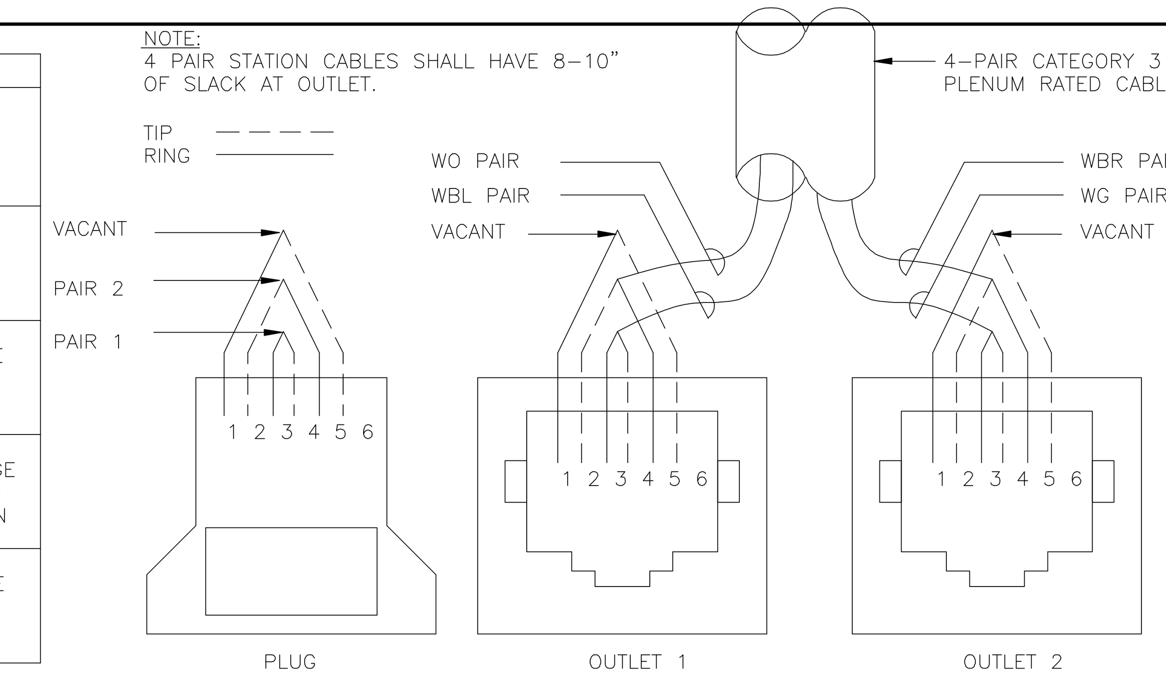

2 T568B CATEGORY 5 PIN ASSIGNMENT & STANDARD TELEPHONE COLOR CODES & USOC CATERGORY 3 PINN ASSIGNMENTS
SCALE: NOT TO SCALE

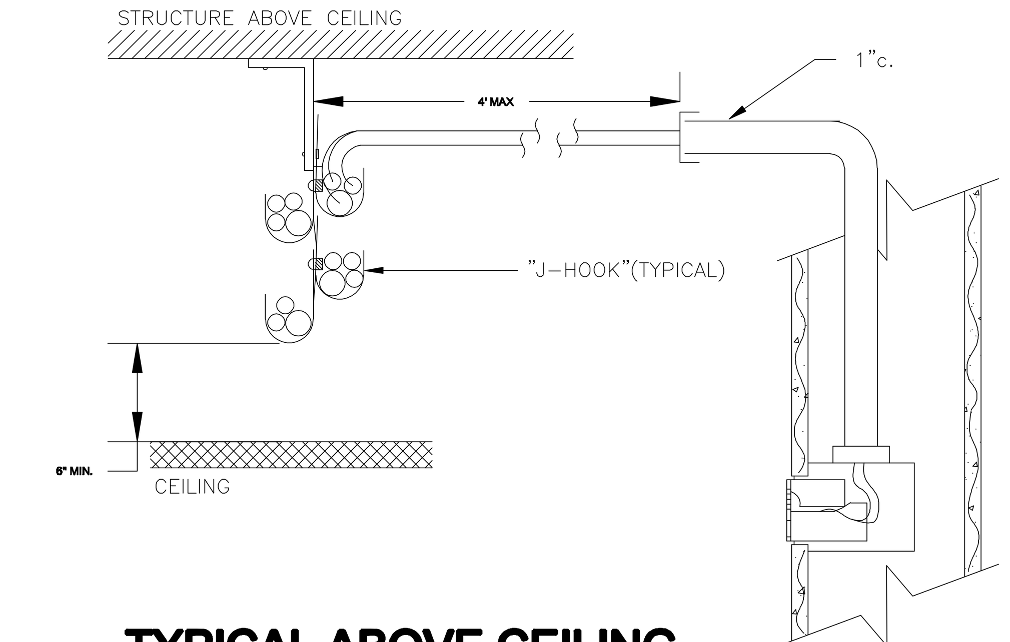

3 TYPICAL ABOVE CEILING CABLE ROUTING
SCALE: NOT TO SCALE

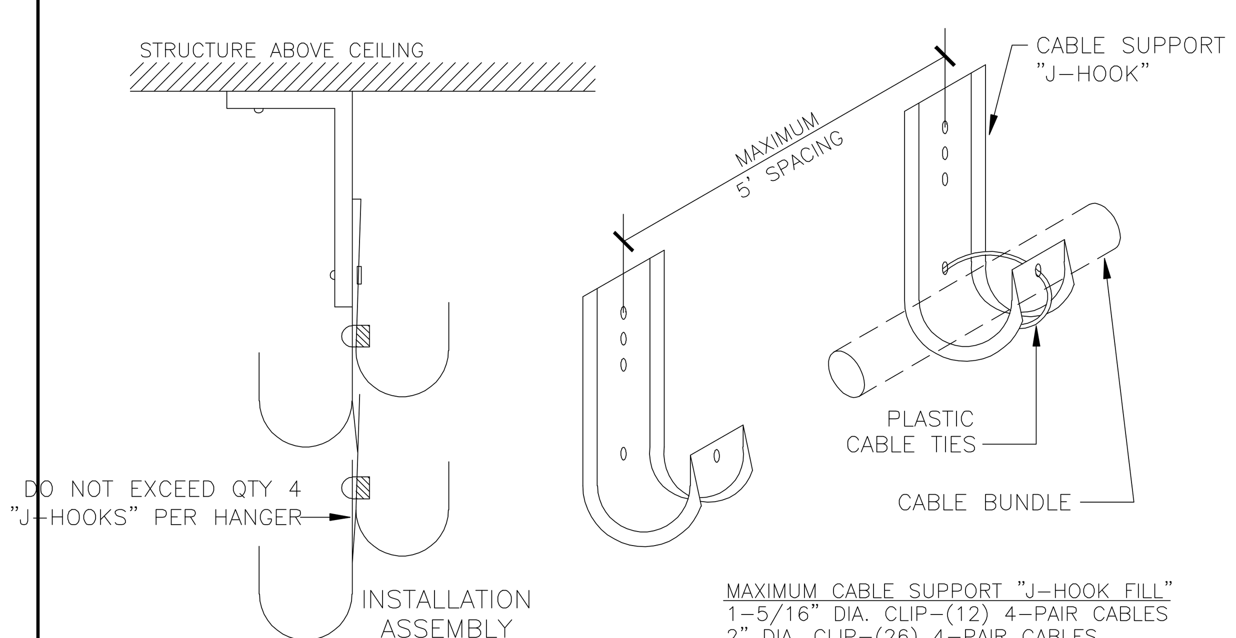

4 J-HOOK OPEN TOP CABLE SUPPORTS
SCALE: NOT TO SCALE

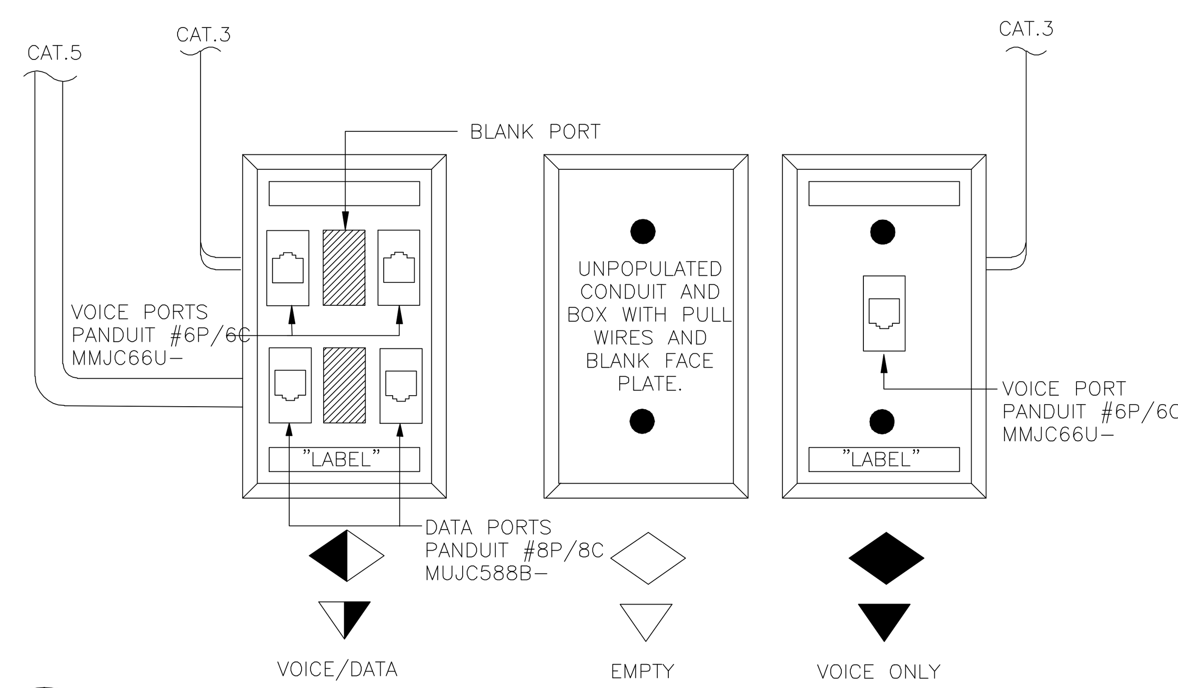

5 MODULAR OUTLET CONFIGURATION
SCALE: NOT TO SCALE

CADFILE: T:\MNTFMD\25FTW\CBC4704-00-537\02-77-4704-00537\Acad\prototypical pdfs\waco\Acad\MEP\ELEC\E5_2.dwg Plotted: Fri, Aug. 07, 2009 @ 1:20 PM By: MBAZAN

Texas Department of Transportation
125 E. 11th Street
Austin, Texas 78701-2483
(512) 416-2048
Copyright © 2005 Texas Department of Transportation

THIS DOCUMENT IS RELEASED FOR THE PURPOSE OF INFORMATION ONLY
NOT FOR REGULATORY APPROVAL, PERMITTING, OR CONSTRUCTION.

WACO AREA ENGINEER AND MAINTENANCE FACILITY
WACO, MCLENNAN COUNTY WACO DISTRICT

Revisions

Drawn by: CON
Project No. CBC4704-00672
Date 05.21.2007
Sheet No.
E5.2
of 15 E sheets

VOICE/DATA DETAILS
NOTE: THIS DRAWING WAS CREATED FOR PRODUCTION ON 22" x 34" SHEET SIZE. DO NOT SCALE PRINTS.

WACO AREA ENGINEER & MAINTENANCE FACILITY
WACO DISTRICT

PROJECT NO: CBC-4704-00-672
DETAIL NUMBER: 09-77-470400672

SPECIFICATIONS INDEX

DIVISION 1 - GENERAL REQUIREMENTS

01001	Summary of Work
01002	Definitions and Standards
01003	Special Conditions
01004	Specification Outline
01200	Price and Payment Procedures
01300	Administrative Requirements
01320	Allowances
01321	Construction Progress Documentation
01330	Submittal Procedures
01400	Quality Control Requirements
01410	Testing Laboratory Services
01500	Temporary Facilities and Controls
01600	Product Requirements
01630	Substitutions and Product Options
01700	Execution Requirements
01770	Closeout Procedures

DIVISION 2 - SITE WORK

02100	Site Clearing
02200	Earthwork
02210	Geotechnical Data
02324	Trenching
02362	Termite Control
02446	Boring and Jacking
02512	Site Water Distribution
02516	Disinfection of Water Distribution
02538	Sanitary Sewer System
02741	Hot Mix Asphalt Paving / Striping
02751	Cement Concrete
02764	Pavement Joint Sealants
02780	Detectable Warning Pavers
02821	Chain Link Fences and Gates

DIVISION 3 - CONCRETE

03100	Concrete Forms and Accessories
03200	Concrete Reinforcement
03300	Cast-in-Place Concrete
03350	Concrete Finishing

DIVISION 4 - MASONRY

04065 Masonry Mortar and Grout
04210 Stone Masonry
04600 Cast Stone
04820 Reinforced Unit Masonry Assemblies

DIVISION 5 – METALS

05312 Steel Roof Deck
05400 Cold-Formed Metal Framing
05500 Metal Fabrications

DIVISION 6 - WOOD AND PLASTIC

06114 Wood Blocking and Curbing
06200 Finish Carpentry
06410 Custom Cabinets

DIVISION 7 - THERMAL AND MOISTURE PROTECTION

07190 Water Repellents
07200 Board Insulation
07213 Batt Insulation
07260 Vapor Retardant Barrier
07413 Sheet Metal Roof / Wall Panels
07614 Metal Roof Curbs
07840 Firestopping
07900 Joint Sealers

DIVISION 8 - DOORS AND WINDOWS

08110 Standard Steel Doors
08115 Standard Steel Frames
08212 Flush Wood Doors
08310 Access Doors and Panels
08333 Overhead Coiling Doors
08410 Aluminium Storefronts
08520 Aluminum Windows
08710 Door Hardware
08800 Glazing

DIVISION 9 - FINISHES

09111 Non-Load-Bearing Metal Framing System
09260 Gypsum Board Assemblies
09300 Tile
09510 Acoustical Ceilings
09546 Linear Metal Ceilings
09650 Resilient Flooring
09900 Painting and Coatings
09910 Painting Fueling System

DIVISION 10 - SPECIALTIES

10100 Visual Display Boards
10170 Plastic Toilet Compartments
10350 Flagpoles
10440 Interior Signage
10500 Lockers
10523 Fire Extinguishers and Cabinets
10800 Toilet Accessories

DIVISION 11 - EQUIPMENT

11132 Projection Screens
11140 Fuel Dispensing System

DIVISION 12 - FURNISHINGS

12493 Horizontal Louver Blinds

DIVISION 13 - SPECIAL CONSTRUCTION

13120 Pre-Engineered Buildings

DIVISION 14 - CONVEYING SYSTEMS

Not Used

DIVISION 15 – MECHANICAL

15050 Basic Mechanical Requirements
15060 Supports and Anchors
15090 Piping Insulation
15097 Ductwork Insulation
15210 Reciprocating Air Compressors
15400 Plumbing, Piping, and Associated Materials
15490 Close Loop Water Recirculation System
15540 Fuel Fired Heaters
15761 Ductless Air Conditioning Systems
15767 Heat Pump Air Conditioning Systems
15810 Ductwork
15820 Ductwork Accessories
15830 Fans
15850 Air Outlets and Inlets
15950 Testing, Adjusting, and Balancing

DIVISION 16 – ELECTRICAL

16010 Basic Electrical Requirements
16060 Grounding and Bonding
16070 Electrical Hangers and Supports
16075 Electrical Identification
16123 Building Wire and Cable
16130 Raceway and Boxes

16140 Wiring Devices
16150 Wiring Connections
16210 Electrical Utility Service
16235 Engine Generators
16411 Enclosed Switches
16442 Panelboards
16491 Fuses
16510 Interior Luminaries
16520 Exterior Luminaries
16530 Emergency Lighting
16710 Telecommunications Cabling
16722 Gas Monitoring System

WACO AREA ENGINEER & MAINTENANCE FACILITY
WACO DISTRICT

PROJECT NO: CBC-4704-00-672
DETAIL NUMBER: 09-77-470400672

LIST OF DRAWINGS

GENERAL

G1.0 COVER SHEET / INDEX
G1.1 ABBREVIATIONS AND SYMBOLS
G1.2 TEXAS ACCESSIBILITY STANDARDS

CIVIL:

C1.0 CIVIL NOTES
C2.0 HORIZONTAL CONTROL PLAN
C3.0 SITE GRADING & DRAINAGE PLAN
C4.0 SITE PAVING PLAN
C5.0 WATER & WASTEWATER PLAN
C6,0 WASTEWATER PROFILE
C7.0 ON SITE SEWAGE FAC. PLAN
C8.0 ON SITE SEWAGE FAC. DETAILS
C9.0 MISC. DETAILS
C10.0 STORM WATER POLL. PREV. PLAN

STRUCTURAL:

S1.1 STRUCTURAL NOTES
S2.1 FOUNDATION PLAN – OFFICE
S2.2 FOUNDATION PLAN – LAB/SHOP
S2.3 FOUNDATION PLAN – VEHICLE STORAGE
S3.1 FOUNDATION DETAILS
S3.2 FOUNDATION DETAILS
S3.3 FOUNDATION DETAILS
S3.4 FOUNDATION DETAILS
S4.1 FRAMING PLAN – OFFICE
S4.2 FRAMING PLAN – LAB/SHOP
S4.3 FRAMING PLAN – VEHICLE STORAGE
S4.4 FRAMING SECTIONS

ARCHITECTURAL:

A1.1 SITE PLAN
A1.2 SITE DETAILS
A1.3 GATE & FENCE DETAILS
A2.0 CODE COMPLIANCE SHEET
A2.1 FLOOR PLAN – OFFICE
A2.2 FLOOR PLAN – LAB / SHOP
A2.3 FLOOR PLAN – VEHICLE STORAGE
A2.4 FLOOR PLAN – WASH BAY & VEHICLE STORAGE
A3.1 ROOF PLAN – OFFICE
A3.2 ROOF PLAN – LAB / SHOP
A3.3 ROOF PLAN – WASH BAY & VEHICLE STORAGE
A3.4 ROOF ROOF DETAILS
A3.5 ROOF DETAILS
A4.1 REFLECTED CEILING PLAN – OFFICE
A4.2 REFLECTED CEILING PLAN – LAB/SHOP
A5.1 EXTERIOR ELEVATIONS – OFFICE
A5.2 EXTERIOR ELEVATIONS – LAB/SHOP
A5.3 EXTERIOR ELEVATIONS – VEHICLE STORAGE
A5.4 EXTERIOR ELEVATIONS - WASH BAY
A6.1 TOILETS – PLANS & ELEVATIONS
A6.2 MILLWORK ELEVATIONS
A7.1 BUILDING SECTIONS - OFFICE
A7.2 BUILDING SECTIONS – LAB/SHOP
A8.1 PARTITION TYPES
A8.2 WALL SECTIONS
A8.3 WALL SECTIONS
A8.4 WALL SECTIONS
A8.5 WALL SECTIONS
A8.6 WALL SECTIONS/DETAILS
A8.7 WALL SECTIONS/DETAILS
A9.1 FINISH SCHEDULE & DETAILS
A9.2 DOOR SCHEDULE – DOOR & WINDOW TYPES
A9.3 DOOR DETAILS
A9.4 WINDOW AND DOOR DETAILS
A9.5 PLAN DETAILS
A9.6 DETAIL
A9.7 DOOR DETAILS

MECHANICAL:

M2.1 MECHANICAL PLAN – OFFICE BUILDING
M2.2 MECHANICAL PLAN – LAB/SHOP BUILDING
M2.3 MECHANICAL PLAN – VEHICLE STORAGE
M4.1 MECHANICAL SCHEDULES - 1
M4.2 MECHANICAL SCHEDULES - 2
M5.1 MECHANICAL DETAILS – 1
M5.2 MECHANICAL DETAILS - 2
M5.3 MECHANICAL DETAILS - 3

PLUMBING:

P2.1 PLUMBING PLAN – OFFICE BUILDING
P2.2 PLUMBING PLAN – LAB/SHOP BUILDING
P2.3 PLUMBING PLAN – WASH BAY
P3.1 PLUMBING RISER DIAGRAMS – SANITARY SEWER
P3.2 PLUMBING RISER DIAGRAMS – DOMESTIC WATER
P4.1 PLUMBING SCHEDULES
P5.1 PLUMBING DETAILS - 1
P5.2 PLUMBING DETAILS – 2
P5.3 PLUMBING DETAILS - 3

ELECTRICAL:

PE1.1 PLUMBING & ELECTRICAL SITE PLAN
E2.1 LIGHTING PLAN - OFFICE BUILDING
E2.2 LIGHTING PLAN - LAB/SHOP BUILDING
E2.3 LIGHTING PLAN - VEHICLE STORAGE BUILDING
E2.4 POWER PLAN - OFFICE BUILDING
E2.5 POWER PLAN - LAB/SHOP BUILDING
E2.6 POWER PLAN - VEHICLE STORAGE BUILDING
E2.7 ELECTRICAL PLAN - WASH BAY
E2.8 GAS DETECTION PLAN - LAB/SHOP BUILDING
E2.20 FUEL STATION PLAN - SCHEDULE & ELEVATIONS
E2.21 FUEL STATION PLAN - POWER AND SPECIAL SYSTEMS
E3.1 ELECTRICAL RISER DIAGRAM, LEGEND & LIGHTING SCHEDULE
E4.1 ELECTRICAL PANEL BOARD SCHEDULES - 1
E4.2 ELECTRICAL PANEL BOARD SCHEDULES - 2
E5.1 ELECTRICAL DETAILS
E5.2 VOICE / DATA DETAILS

SECTION 01001

SUMMARY OF WORK

PART 1 - GENERAL

1.1 SECTION INCLUDES

A. Project Identification

B. Contract description

C. Work by the Texas Department of Transportation (Owner)

D. Owner supplied products

E. Contractor's use of site [and premises]

F. Owner occupancy

G. Specification Conventions

1.2 PROJECT IDENTIFICATION

TEXAS DEPARTMENT OF TRANSPORTATION
WACO DISTRICT 09, MCLENNAN COUNTY
Waco Area Engineer & Maintenance Facility
7703 Bagby Avenue
Waco, McLennanCounty, Belton, Texas

1.3 CONTRACT DESCRIPTION

A. Work of the Project includes construction of four buildings and all related site work. Major components of site work consist of site roadways, parking lots, asphalt paving, concrete driveways, concrete curb and gutter, security fencing and gates, concrete walks, and connection of building to utility systems.

Building 1: Office Building. OFFICE: Slab on grade foundation, with a pre-engineered metal building structure with roof purlins, roof insulation board and standing seam metal roof, metal studs and stone veneer exterior wall, forced air DX heating and cooling system.

Building 2: Shop / Laboratory. Connected to Building 1 with breezeway. Slab on grade foundation with pre-engineered metal building structure with roof purlins, standing seam metal roof and metal wall panels.

Building 3: Vehicle Storage. Free standing. Slab on grade foundation. Pre-engineered metal building structure with roof purlins, standing seam metal roof and metal wall panels.

Building 4: Wash Bay Building. Free standing enclosed truck wash facility, slab on grade foundation with pre-engineered metal building structure with roof purlins, standing seam metal roof, cmu walls, and metal wall panels.

The Work includes construction of a fuel station, slab on grade foundation with fuel tank and equipment.

In general, the Work includes site clearing, earthwork, paving, fencing, irrigation, landscaping, site amenities, concrete foundation, pre-engineered metal building structural frame and roofing, masonry veneer on metal studs, pre-finished metal siding, aluminum windows and storefront, drywall interior partitions, hollow metal doors, pre-finished wood doors, ceramic tile, vinyl composition flooring, carpet, paint, millwork, mechanical systems, plumbing systems, electrical systems, propane monitoring system, recycled water system and equipment installation as indicated in the Contract Documents

B. Perform Work of Contract under Lump Sum Total cost contract with Owner in accordance with Conditions of Contract.

1.4 WORK BY OWNER

A. Concurrent work by Owner or others: Owner reserves the right to conduct minor work with his own forces or separate contractors during the construction. Work will be coordinated with the contractor along the general demarcation line shown on the civil drawings.

1.5 OWNER SUPPLIED PRODUCTS

A. Owner will arrange for and deliver Shop Drawings, Product Data, and Samples to Contractor.

B. Owner will arrange and pay for delivery of Owner-furnished items according to Contractor's Construction Schedule.

C. After delivery, Owner will inspect delivered items for damage. Contractor shall be present for and assist in Owner's inspection.

D. If Owner-furnished items are damaged, defective, or missing, Owner will arrange for replacement.

E. Owner will arrange for Manufacturer's field services and for delivery of Manufacturer's warranties to Contractor.

F. Owner will furnish Contractor the earliest possible delivery date for Owner-furnished products. Using Owner-furnished earliest possible delivery dates, Contractor shall designate delivery dates of Owner-furnished items in Contractor's Construction Schedule.

G. Contractor shall review Shop Drawings, Product Data, and Samples and return them to Architect noting discrepancies or anticipated problems in use of product.

H. Contractor is responsible for receiving, unloading, and handling Owner-furnished items at Project site.

I. Contractor is responsible for protecting Owner-furnished items from damage during storage and handling, including damage from exposure to the elements.

J. If Owner-furnished items are damaged as a result of Contractor's operations, Contractor shall repair or replace them.

1.6 CONTRACTOR'S USE OF SITE [AND PREMISES]

A. Access to Site: Contractor will have unrestricted access to site. Contractor shall have full use of premises for construction operations, including use of Project site, during construction period. Contractor's use of premises is limited only by Owner's right to perform work or to retain other contractors on portions of Project.

B. Owner Adjacent Site: Contractor will have very limited access to Owners adjacent property, coordinate site access to Owners adjacent property.

C. Construction Operations: Limited to areas noted on the drawings as the DEMARCATION line.

D. Time Restrictions for Performing Work: Owner will inform Contractor of any Time Restrictions.

1.7 OWNER OCCUPANCY

A. The Owner will occupy the premises outside the limits of the construction site as denoted on the plans during the entire period of construction.

B. Cooperate with Owner to minimize conflict, and to facilitate Owner's operations.

1.8 SPECIFICATION CONVENTIONS

A. These specifications are written in imperative mood and streamlined form. This imperative language is directed to the Contractor, unless specifically noted otherwise. The words “shall be” are included by inference where a colon (:) is used within sentences or phrases. Except where specifically intended otherwise, the subject of all imperative statements is the Contractor. For example, 'Provide tile' means 'Contractor shall provide tile.'

1.9 CONTRACTOR

A. Permits and Fees: Apply for, obtain, and pay for permits, if applicable, fees, and utility company back charges required to perform the work. Submit copies to Owner.

B. Codes: Comply with applicable codes and regulations of authorities having jurisdiction. Submit copies of inspection reports, notices and similar communications to Owner. Primary code is the International Building Code, 2003.

C. Dimensions: Verify dimensions indicated on drawings with field dimensions before fabrication or ordering of materials. **Do not scale drawings.**

D. Existing Conditions: Notify Owner of existing conditions differing from those indicated on the drawings. Do not remove or alter structural components without prior written approval of the Architect.

E. Coordination:
1. Coordinate the work of all trades.
2. Prepare coordination drawings for areas above ceilings where close tolerances are required between building elements and mechanical and electrical work.
3. Verify location of utilities and existing conditions prior to beginning work.

F. Installation Requirements, General:
1. Inspect substrates and report unsatisfactory conditions in writing.
2. Do not proceed until unsatisfactory conditions have been corrected.
3. Take field measurements prior to fabrication where practical. Form to required shapes and sizes with true edges, lines and angles. Provide inserts and templates as needed for work of other trades.
4. Install materials in accordance with Manufacturer's instructions and approved submittals.
5. Install materials in proper relation with adjacent construction and with proper appearance.
6. Restore units damaged during installation. Replace units which cannot be restored at no additional expense to the Owner.
7. Refer to additional installation requirements and tolerances specified under individual specification sections.

G. Definitions:
1. Provide: Furnish and install, complete with all necessary accessories, ready for intended use. Pay for all related costs.
2. Reviewed: Review of items submitted. Not a limitation or release for compliance with the Contract Documents or regulatory requirements. Refer to limitations of 'Reviewed' in General and Supplementary Conditions.

H. Intent: Drawings and specifications are intended to provide the basis for proper completion of the work suitable for the intended use. Anything not expressly set forth but which is reasonable implied or necessary for proper performance of the project shall be included.

PART 2 - PRODUCTS (Not Used)

PART 3 - EXECUTION (Not Used)

END OF SECTION

SECTION 01002

DEFINITIONS AND STANDARDS

PART 1 - GENERAL

1.1 RELATED DOCUMENTS

A. Drawings and general provisions of Contract, including General and Supplementary Conditions and other Division 1 Specification Sections, apply to this Section.

1.2 SUMMARY: This section specifies administrative requirements for compliance with governing regulations, codes and standards.

A. Requirements include obtaining permits, licenses, inspections, releases and similar documentation, as well as payments, statements and similar requirements associated with regulations, codes and standards.

1.3 DEFINITIONS

A. General: Definitions contained in this Article are not necessarily complete, but are general to the extent that they are not defined more explicitly elsewhere in the Contract documents.

B. Indicated: Refers to graphic representations, notes or schedules on the Drawings, or other Paragraphs or Schedules in Specifications, and similar requirements in Contract Documents. Where terms such as "shown," "noted," "scheduled," and "specified" are used, it is to help locate the reference; not limitation on location is intended except as specifically noted.

C. Directed: Terms such as "directed," "requested," "authorized," "selected," "reviewed," "required," and "permitted" mean "directed by the Architect/Engineer," "requested by the Architect/Engineer," and similar phrases. However, no implied meaning shall be interpreted to extend the Architect/Engineer's responsibility into the Contractor's area of construction supervision.

D. Review: The term "reviewed" where used in conjunction with the Architect/Engineer's action on the Contractor's submittals, applications, and requests, is limited to the responsibilities and duties of the Architect/Engineer stated in General and Supplementary Conditions. Such review shall not release the Contractor from responsibility to fulfill Contract Document requirements, unless otherwise provided in the Contract Documents.

E. Regulation: The term "Regulations" includes laws, statutes, ordinances and lawful orders issued by authorities having jurisdiction, as well as rules, conventions and agreements within the construction industry that control performance of the Work, whether they are lawfully imposed by authorities having jurisdiction or not.

F. Furnish: The term "furnish" is used to mean "supply and deliver to the Project site, ready for unloading, unpacking, assembly, installation, and similar operations."

G. Install: The term "install" is used to describe operations at project site including the actual "unloading, unpacking, assembly, erection, placing, anchoring, applying, working to dimension, finishing, curing, protecting, cleaning and similar operations.

H. Provide: The term "provide" means "to furnish and install, complete and ready for use".

I. Installer: An "Installer" is an entity engaged by the Contractor, either as an employee, subcontractor or sub-subcontractor for performance of a particular construction activity, including installation, erection, application and similar operations. Installers are required to be experienced in the construction they are engaged to perform.
   1. The term "experienced," when used with the term "Installer" means having a minimum of 5 previous Projects similar in size and scope to this Project and familiar with the precautions required, and has complied with requirements of the authority having jurisdiction.

J. Project Site is the space available to the Contractor for performance of the Work, either exclusively or in conjunction with others performing other construction as part of the Project. The extent of the Project Site is shown on the Drawings, and may or may not be identical with the description of the land upon which the Project is to be built.

K. Testing Laboratories: A "testing laboratory" is an independent entity engaged to perform specific inspections or tests, either at the Project Site or elsewhere, and to report on, and, if required, to interpret results of those inspections or tests.

1.4 SPECIFICATION FORMAT AND CONTENT EXPLANATION: This Article is provided to help the user of these specifications understand the format, language, implied requirements, and similar conventions. None of the explanations shall be interpreted to modify the substance of Contract requirements.

A. Specification Format: These Specifications are organized into Divisions, Sections or Trade Headings based on the Construction Specifications Institute's 16 Division format and the MASTERFORMAT numbering system. This organization conforms generally to recognize construction industry practice.

B. Specification Content: This Specification has been produced employing conventions in the use of language and the intended meaning of certain terms, words, and phrases when used in particular situations or circumstances. These conventions are explained as follows:
   1. Language used in the Specifications and other Contract Documents is the abbreviated type. Implied words and meanings will be appropriately interpreted. Singular words will be interpreted as plural and plural words interpreted as singular where applicable and where the full context of the Contract Documents so indicates.
   2. Imperative Language is used generally in the Specifications. Requirements expressed imperatively are to be performed by the Contractor. At certain locations in the text, for clarity, subjective language is used to describe responsibilities that must be fulfilled indirectly by the Contractor or by others when so noted.

C. Assignment of Specialists: The Specifications requires that certain specific Construction activities shall be performed by specialists who are recognized experts in the operations to be performed. The specialists must be engaged for those activities, and the assignments are requirements over which the Contractor has no choice or option. Nevertheless, the ultimate responsibility for fulfilling Contract requirements remains with the Contractor.

1. This requirement shall not be interpreted to conflict with enforcement of building codes and similar regulations governing the Work. It is also not intended to interfere with local trade union jurisdictional settlements and similar conventions.
2. Trades: Use of titles such as "carpentry" is not intended to imply that certain construction activities must be performed by accredited or unionized individuals of a corresponding generic name, such as "carpenter". It also does not imply that requirements specified apply exclusively to trades persons of the corresponding generic name.

1.5 DRAWING SYMBOLS

A. Graphic Symbols used on the Drawings are those recognized in the construction industry for purposes indicated. Where not otherwise noted, symbols are defined by "Architectural Graphic Standards," published by John Wiley & Sons, Inc., seventh edition.

B. Mechanical/Electrical Drawings: Graphic symbols used on mechanical and electrical Drawings are generally aligned with symbols recommended by ASHRAE. Where appropriate, they are supplemented by more specific symbols recommended by technical associations including, ASME, ASPE, IEEE and similar organizations. Refer instances of uncertainty to the Architect/Engineer for clarification before proceeding.

1.6 INDUSTRY STANDARDS

A. Applicability of Standards: Except where Contract Documents include more stringent requirements, applicable construction industry standards have the same force and effect as if bound or copied directly into Contract Documents. Such standards are made a part of the Contract Documents by reference. Individual Sections indicate which codes and standards the Contractor must keep available at the Project Site for reference.

1. Referenced standards take precedence over standards that are not referenced but recognized in the construction industry as applicable.
2. Non-referenced standards are not directly applicable to the Work, except as a general requirement of whether the Work complies with construction industry standards.
3. Non-referenced standards: Except as otherwise limited by the Contract Documents, standards not referenced by recognized in the industry as applicable will be enforced for performance of the Work. The Architect/Engineer will decide whether a code or standard is applicable, or which of several are applicable.

B. Publication Dates: Where compliance with an industry standard is required, comply with standard in effect as of date of Contract Documents.

1. Updated Standards: At the request of the Architect/Engineer, Contractor or authority having jurisdiction, submit a Change Order proposal where an

applicable code or standard has been revised and reissued after the date of the Contract Documents and before performance of Work affected. The Architect/Engineer will decide whether to issue a Change Order to proceed with the updated standard.

C. Conflicting Requirements: Where compliance with two or more standards is specified, and they establish different or conflicting requirements for minimum quantities or quality levels, the most stringent requirement will be enforced, unless the Contract Documents indicate otherwise. Refer requirements that are different, but apparently equal, and uncertainties as to which quality level is more stringent to the Architect/Engineer for a decision before proceeding.

1. Minimum Quantities or Quality Levels: In every instance the quantity or quality level shown or specified shall be the minimum to be provided or performed. The actual installation may comply exactly, within specified tolerances, with the minimum quantity or quality specified, or it may exceed that minimum within reasonable limits. In complying with these requirements, indicated numeric values are minimum or maximum values, as noted, or appropriate for the context of the requirements. Refer instances of uncertainty to the Architect/Engineer for decision **before** proceeding.

D. Copies of standards: Each entity engaged in construction on the Project is required to be familiar with industry standards applicable to that entities' Construction activity. Copies of applicable standards are not bound with the Contract Documents.

1. Where copies of standards are needed for performance of a required construction activity, the Contractor shall obtain copies directly from the publication source.
2. Although copies of standards needed for enforcement of requirements may be part of required submittals, the Architect/Engineer reserves the right to require the Contractor to submit additional copies as necessary for enforcement of requirements.

E. Abbreviations and Names: Trade association names and titles of general standards are frequently abbreviated. Where acronyms or abbreviations are used in the Specifications or other Contract Documents, they mean the recognized name of the trade association, standards generating organization, authority having jurisdiction or other entity applicable to the context of the text provision. Refer to the "Encyclopedia of Associations," published by Gale Research Co., available in most libraries.

F. Abbreviations and Names: Trade association names and titles of general standards are frequently abbreviated. The following acronyms as referenced in Contract Documents are defined to mean the associated names. Names and addresses are subject to change, and are believed to be, but are not assured to be, accurate as of date of Contract Documents:

1.	AASHTO	American Association of State Highway and Transportation Officials 444 No. Capitol St., Suite 225, Washington, DC 20001	202-624-5800
2.	ACI	American Concrete Institute, P. O. Box 19150 Detroit, MI 48219	313-532-2600

3.	ACIL	American Council of Independent Laboratories 1725 K Street, NW Washington, DC 20006	202-887-5872
4.	ACPA	American Concrete Pipe Association 8320 Old Courthouse Road Vienna, VA 22180	703-821-1990
5.	AGA	American Gas Association 1515 Wilson Blvd. Arlington, VA 22209	703-841-8400
6.	AI	Asphalt Institute Asphalt Institute Building College Park, MD 20740	301-277-4258
7.	AIA	American Institute of Architects 1735 New York Ave., NW Washington, DC 20006	202-626-7300
8.	AIHA	American Industrial Hygiene Association 475 Wolf Ledges Parkway Akron, OH 44311	216-762-7294
9.	AISC	American Institute of Steel Construction 400 No. Michigan Ave., 8th Floor Chicago, IL 60611	312-670-2400
10.	AISI	American Iron and Steel Institute 1000 Sixteenth St., N.W. Washington, DC 20036	202-452-7100
11.	ALI	Associated Laboratories 641 So. Vermont Street Palatine, IL 60067	312-358-7400
12.	ANSI	American National Standards Institute 1430 Broadway New York, NY 10018	212-354-3300
13.	API	American Petroleum Institute 1220 L Street, N.W. Washington, DC 20005	202-682-8000
14.	ASC	Adhesive and Sealant Council 1500 Wilson Blvd., Suite 515 Arlington, VA 22209	703-841-1112
15.	ASME	American Society of Mechanical Engineers 345 East 47th St. New York, New York 10017	212-705-7722
16.	ASPE	American Society of Plumbing Engineers 3617 Thousand Oaks Blvd., Suite 210 Westlake, CA 91362	805-495-7120
17.	ASSE	American Society of Sanitary Engineering P. O. Box 40362	216-835-3040

		Bay Village, OH 44140	
18.	ASTM	ASTM 1916 Race St. Philadelphia, PA 19103	215-599-5400
19.	AWS	American Welding Society P. O. Box 351040 550 Le Jeune Road, NW Miami, FL 33135	305-443-9353
20.	AWWA	American Water Works Association 6666 W. Quincy Ave. Denver, CO 80235	303-794-7711
21.	CRSI	Concrete Reinforcing Steel Institute 933 Plum Grove Road Schaumburg, IL 60195	312-490-1700
22.	IEEE	Institute of Electrical and Electronic Engineers 345 E. 47th St. New York, NY 10017	607-723-3531
23.	ISA	Instrument Society of America P. O. Box 12277 67 Alexander Drive Research Triangle Park, NC 27709	919-549-8411
24.	LPI	Lightning Protection Institute P. O. Box 458 Harvard, IL 60033	815-943-7211
25.	MCAA	Mechanical Contractor's Association of America 5410 Grosvenor Lane, Suite 120 Bethesda, MD 20814	301-897-0770
26.	MSS	Manufacturers Standardization Society of the Valve and Fittings Industry 127 Park St., NE Vienna, VA 22180	703-281-6613
27.	NAPA	National Asphalt Pavement Association Calvert Building, Suite 620 6811 Kenilworthy Ave. Riverdale, MD 20737	301-779-4880
28.	NEC	National Electric Code (by NFPA)	
29.	NECA	National Electrical Contractors Association 7315 Wisconsin Ave. Bethesda, MD 20814	301-657-3110
30.	NEMA	National Electrical Manufacturers Association 2101 L Street, NW, Suite 300 Washington, DC 20037	202-457-8400
31.	NFPA	National Fire Protection Association Batterymarch Park Quincy, MA 02269	617-770-3000

32.	NPCA	National Paint and Coatings Association 1500 Rhode Island Ave., NW Washington, DC 20005	202-462-6272
33.	PDI	Plumbing and Draining Institute (c/o Austin O. Roche, Jr.) 5342 Boulevard Pl. Indianapolis, IN 46208	317-251-5298
34.	PEI	Petroleum Equipment Institute 6514 East 69th St. Tulsa, OK 74133-1719	918-494-9696
35.	SSPC	Steel Structures Painting Council 4400 Fifth Avenue Pittsburgh, PA 15213	412-578-3327
36.	UL	Underwriters Laboratories 333 Pfingsten Rd. Northbrook, IL 60062	312-272-8800
37.	WRI	Wire Reinforcement Institute 8361 A Greensboro Drive McLean, VA 22102	703-790-9790
38.	WSC	Water Systems Council 600 S. Federal St., Suite 400 Chicago, IL 60605	312-922-6222
39.	WWPA	Woven Wire Products Association 2515 No. Nordica Ave. Chicago, IL 6063	312-637-1359

G. Federal Government Agencies: Names and titles of federal government standard or Specification producing agencies are frequently abbreviated. The following acronyms or abbreviations referenced in the Contract Documents indicate names of standard or Specification producing agencies of the federal government. Names and addresses are subject to change, but are believed to be, but are not assured to be, accurate and up-to-date as of the date of the Contract Documents.

1.	CE	Corps of Engineers (US Dept. of the Army) Chief of Engineers - Referral Washington, DC 20314	202-693-6456
2.	CFR	Code of Federal Regulations Available from the Government Printing Office North Capitol Street Between G and H Streets, NW Washington, DC 20402 (Material is usually first published in the Federal Register)	202-783-3238
3.	CPSC	Consumer Product Safety Commission 1111 Eighteenth St., NW Washington, DC 20207	202-634-7700
4.	CS	Commercial Standard	202-377-2000

		US Dept. of Commerce Government Printing Office Washington, DC 20402	
5.	DOC	Department of Commerce 14th St and Constitution Ave., NW Washington, DC 20230	202-377-2000
6.	DOT	Department of Transportation 400 Seventh St. SW Washington, DC 20590	202-426-4000
7.	EPA	Environmental Protection Agency 401 M St., SW Washington, DC 20460	202-829-3535
8.	FS	Federal Specification (General Services Administration) Specifications Unit (WFSIS) 7th and D St., SW Washington, DC 20406	202-472-2205 202-472-2140
9.	GSA	General Services Administration F Street and 18th St., NW Washington, DC 20405	202-655-400
10.	MIL	Military Standardization Documents (US Department of Defense) Naval Publications and Forms Center 5801 Tabor Ave. Philadelphia, PA 19120	
11.	NBS	National Bureau of Standards (US Dept. of Commerce) Gaithersburg, MD 20234	301-921-1000
12.	OSHA	Occupational Safety and Health Administration (US Dept. of Labor) Government Printing Office Washington, DC 20402	202-783-3238
13.	PS	Product Standard of NBS (US Dept. of Commerce) Government Printing Office Washington, DC 20402	202-783-3238

1.7 GOVERNING REGULATIONS/AUTHORITIES: The Architect/Engineer has contacted authorities having jurisdiction where necessary to obtain information necessary for the preparation of Contract Documents; that information may or may not be of significance to the Contractor. Contact authorities having jurisdiction directly for information and decisions having a bearing on the Work.

A. Copies of Correspondence: During preparation of the Contract Documents, the Architect/Engineer has maintained a file containing correspondence with authorities having jurisdiction. This file is available at the Architect/Engineer's office for reference. If requested, the Architect/Engineer will provide copies of correspondence at cost of reproduction.

B. Copies of Regulations: Obtain copies of the following regulations and retain at the Project Site, available for reference by parties who have a reasonable need for such reference.

C. Trade Union Jurisdictions: The Contractor shall maintain, and require subcontractors to maintain complete current information on jurisdictional matters, regulations and pending actions, as applicable to construction activities. The manner in which Contract Documents have been organized and subdivided is not intended to indicate of trade union or jurisdictional agreements.
   1. Discuss new developments at Project meetings at the earliest feasible dates. Record relevant information and actions agreed upon.
   2. Assign and subcontract construction activities, and employ tradesmen and laborers, in a manner that will not unduly risk jurisdictional disputes that could result in conflicts, delays, claims and losses.

1.8 SUBMITTALS

A. Permits, Licenses, and Certificates: For the Owner's records, submit copies of permits, licenses, certifications, inspection reports, releases, jurisdictional settlements, notices, receipts for fee payments, judgments, and similar documents, correspondence and records established in conjunction with compliance with standards and regulations bearing upon performance of the Work.

PART 2 - PRODUCTS (Not Used)

PART 3 - EXECUTION (Not Used)

END OF SECTION

SECTION 01003

SPECIAL CONDITIONS

PART 1 - GENERAL

1.1 SCOPE AND RELATED DOCUMENTS

A. These Special Conditions are applicable to the entirety of the work and shall be subject to the requirements of the Uniform General Conditions of the Contract, as well as the Supplementary General Conditions and other Specification Sections. This Section shall in no way define or limit the responsibilities for the work or any portion thereof to any one contracting or subcontracting entity.

B. This Section contains the following requirements:
1. General Contract Requirements
2. Time of Completion
3. Site Visitation prior to Bid
4. Wage Rates
5. Fees, Permits, Notices
6. Existing site vegetation protection plans
7. Protection of Property, Utilities and Personnel
8. Storage of Materials
9. Security
10. Cutting, Patching and Installation of Sleeves
11. Precedence of Contract Documents and Necessary Work
12. Contractor’s Representatives and Equipment
13. Asbestos or Lead Hazards
14. Construction Layout
15. Environmental Conditions
16. Warranty

C. Refer to Section 01001 Summary of Work for these project related topics:
1. Project/Work Identification
2. General Descriptions of the Scope of Work

D. Refer to Section 01500 Temporary Facilities and Controls:
1. Temporary Field Office and Storage Area
2. Temporary Facilities and Utilities

1.2 THE CONTRACT AND CONTRACTOR

A. The materials to be furnished and the labor to be performed in conjunction with the construction and completion of this project are to be performed under a SINGLE UNIT BID PRICE of the Contract.

B. The Contractor's work includes the furnishing of all materials, labor, permits, machinery, tools, and supplies and to construct the project in accordance with the Contract Documents.

1.3 TIME OF COMPLETION

A. The Contractor agrees to commence work on or before the date to be specified in a written "Notice to Proceed" to be issued by the Owner and to complete construction of all improvements, as required by the Contract Documents.

B. Contractor further agrees that should he fail to complete the work within the time limits specified herein or as subsequently adjusted as provided in the General Conditions of Agreement, he shall pay the liquidated damages for each consecutive calendar day thereafter as provided in Article VI. Supplementary General Conditions.

1.4 SITE VISITATION AND INSPECTION

A. Contractor shall visit the site prior to submitting his Bid to acquaint himself with all work to be performed under this contract.

B. The Contractor shall verify all existing items indicated on plans and/or specified, and familiarize himself with the existing work conditions, hazards, grades, existing utility services and conditions which affect his work. The submission of bids shall be deemed evidence of such visits. All proposals shall take these existing conditions into consideration, and the lack of specific information on the Drawings shall not relieve the Contractor of any responsibility.

1.5 WAGE RATES

A. Refer to wage rates furnished and incorporated into these Specifications. Wage rates shown within these schedules shall be maintained as a requirement for the duration of the Contract.

1.6 FEES, PERMITS AND NOTICES

A. Unless otherwise provided in the Contract Documents, the Contractor shall secure and pay for all permits and governmental fees, licenses and inspections necessary for the proper execution of the Work.

B. No local building permits will be required for this project for work on State property.

C. Removal of Temporary Fences: Prior to request for final payment, Contractor shall remove all temporary buildings, fencing, etc., and restore construction yard area and storage area site and any related access drives to their original condition.

D. Existing Vegetation Protection: Contractor shall coordinate protection of existing site vegetation.

1.7 PROTECTION OF PROPERTY, UTILITIES AND PERSONNEL

A. General:

1. The Contractor shall provide all equipment and labor necessary to protect all workers, building personnel and the general public from hazards associated with the contract. The Owner and the Architect shall not be held responsible for failure of the Contractor to perform the job in a safe manner.
2. The Contractor shall be responsible for initiating, maintaining, and supervising safety precautions and programs associated with the work. It shall be the duty and responsibility of the Contractor to comply with all pertinent sections of the Occupational Safety and Health Act of 1975, and all amendments thereto. Provide appropriate safety measures with regard to open shaft barricades, staging, scaffolding and similar operations this project may require.
3. Trench Safety: Contractor shall comply with Trench Safety requirements contained in the Uniform General Conditions and Supplemental General Conditions. The Contractor shall ensure that all vertical embankments are graded to the minimum recommended angle of repose for the soils encountered for that specified backfill is placed and compacted in such areas to eliminate the possibility of soil collapse.
4. Remove all fences, temporary structures, barricades, etc. Replace all vegetation damaged by construction operations, including grass, shrubs, trees, to the satisfaction of the Owner. Contractor shall coordinate protection of existing trees and vegetation.

B. Protection of Utilities:

1. The Contractor shall be solely responsible for the location and protection of any and all utility lines in the work area. The Contractor shall exercise due care to locate and to mark, uncover or otherwise protect all such lines in the construction zone and any of the Contractor's work or storage areas. Upon request, the Owner shall provide such information he has about the location and grade of water, sewer, gas and telephone and electric lines and other utilities in the work area, but such information shall not relieve the Contractor's obligation hereunder which shall be primary and non delegable.
2. The Contractor shall indemnify or reimburse such expenses or costs that may result from the unauthorized or accidental damage to all existing utility lines in the work area.
3. Unknown Utility Lines: In case utility lines are found which are not shown on the contract drawings, and if the lines need to be cut or removed, the Contractor shall be responsible for determining whether or not the lines are "active" or "abandoned".
4. Contractor shall notify “One-Call” systems for public utility information within the public R.O.W. and immediately adjacent to project property lines.

C. Safety: The Contractor shall take all reasonable precautions for the safety of, and shall provide all reasonable protection to prevent damage, injury, or loss to the following:

1. All employees on the work, and the general public, who may be affected by work on this project.
2. The Contractor shall comply with all applicable laws, ordinances, rules, regulations and lawful orders of any public authority having jurisdiction for the safety of persons or property or to protect them from damage, injury or loss. He shall erect and maintain, as required by existing conditions and progress of the work, all reasonable safeguards for safety and protection, including posting danger signs and other warnings against hazards, erecting protective fencing, overhead protection, barricades or similar pedestrian safety measures, promulgating safety regulations and notifying owners and users of utilities. All damage or loss claimed to any property referred to in this article caused in whole or in part by the Contractor, or Subcontractor, or anyone directly or indirectly employed by any of them, or by anyone for whose acts any of them may be liable, shall be the sole responsibility of the Contractor and shall be remedied by the Contractor.
3. All machinery and equipment and other physical hazards shall be guarded in accordance with the "Manual of Accident Prevention in Construction" of the Associated General Contractors of America except where incompatible with Federal, State or Municipal laws or regulations. The Contractor shall provide such machinery guards, safe walkways, ladders, bridges, gangplanks and other safety devices. The safety precautions actually taken and their adequacy shall be the sole responsibility of the Contractor, acting at his discretion as an independent Contractor.
4. Contractor shall comply with Trench Safety requirements contained in the Uniform General Conditions.
5. The Contractor shall remove all temporary barricades and protection devices upon completion of the work.

D. Protection of Work:

1. Protect all the work and all materials and equipment to be incorporated therein, whether in storage on or off the site, under the care, custody or control of the Contractor or any of his Subcontractors or Sub-Subcontractors.
2. Each Contractor shall properly and effectively protect all materials and equipment furnished by him during and after their installation. Building materials, Contractor's equipment, etc., may be stored on the premises, but the placing of same shall be within a secure area. Each Subcontractor shall protect and be responsible for any damage to his work or material, from the date of the agreement until the final payment is made, and shall make good without cost to the Owner, any damage to his work or material, from the date of the agreement until the final payment is made, and shall make good without cost to the Owner, any damage or loss that may occur during this period. The Contractor shall handle all material as directed, such that materials may be inspected by

the Architect or Owner's Representative. All cement, lime and other material affected by weather shall be covered and protected to keep them free from damage while they are being transported to the site and when they are stored on the site.

3. During the execution of the Work, open ends of all piping and conduit and all openings in equipment shall be closed before leaving the Work at any time, so as to prevent the entrance of all foreign matter. No trash is to be allowed to accumulate.
4. All heating, ventilating, plumbing and electrical equipment shall be protected during the execution of the Work.
5. All plumbing fixtures shall be protected and shall be boarded over so that they cannot be used by workmen or others. All drains shall be covered until placed in service to prevent the entrance of foreign matter.

1.8 FURNISHING AND STORAGE OF MATERIALS

A. Except as otherwise specified, the Contractor shall furnish at his own cost and risk, all tools, apparatus, hoists, derricks, and Subcontractors shall arrange with the General Contractor for the use of same. Temporary equipment shall be installed in such a manner that finish work will not be damaged by smoke, falling mortar, concrete or other causes.

B. All temporary shoring required for the installation of work shall be included in this Contract and the General Contractor must assume all responsibility for this work and make good any damage caused by improper supports or failure of shoring in any respect.

C. Storage of materials to be used in the contract is the responsibility of the Contractor. The Owner may provide an area to store materials. The security of the storage area is the responsibility of the Contractor. Contractors are encouraged to limit storage of materials to a minimum. Material storage is not allowed for pesticides and other hazardous materials that are the property of the Contractor.

1.9 SECURITY

A. The Contractor shall be totally responsible for providing security for his materials, tools and equipment, and for any work in progress. If Contractor's personnel must leave an uncompleted and unsecured work area (overnight, lunch, etc.) unattended, then they must remove all tools, equipment, materials, and thoroughly close up or secure uncompleted work.

B. Site Security: Contractor shall make arrangements for and pay the cost of providing security of exterior premises if vandalism becomes a problem.

1.10 CUTTING, PATCHING, AND INSTALLATION OF SLEEVES

A. Each Contractor and Subcontractor requiring cutting and patching in the execution of his work shall leave all chases, holes, or openings straight, true

and of proper size as may be necessary for the proper installation of his own or other Contractor's or Subcontractor's work, consulting with the superintendent and Contractors or Subcontractors concerned parties regarding locations and size.

B. All work shall be done with proper tools and by careful workmen of the particular trade to which such work belongs, and shall be done without extra charge to the Owner. Each Contractor or Subcontractor will be required to build into his own work, as directed, any and all items furnished by others. Cutting and repairing of new work in place, made necessary for negligence of another Contractor or Subcontractor or anyone employed by him, shall be paid for by the party who is at fault but each Contractor or Subcontractor shall cooperate with all other contractors or subcontractors so that all necessary preparations are made in each branch of the work, as required for all other branches, so far as possible.

C. The work of each Specifications Section includes all cutting, patching and digging for work in that trade section, unless otherwise specified, as required for proper accommodations of work of other trades. Execute such work with competent workmen skilled in trade required for restoration. Each Subcontractor shall arrange and pay for cutting and patching required for installation of his work.

D. Each Contractor shall provide sleeves for service lines covered in his Contract.

1.11 PRECEDENCE OF CONTRACT DOCUMENTS AND NECESSARY WORK

A. The drawings accompanying these specifications attempt to show all work required to complete the project in accordance with the intent and purposes of these specifications. Contractor shall verify all conditions at the building and at the site that affect his work related to the project. The Contractor shall notify the Architect of any discrepancies prior to initiating the work.

B. Figured dimensions are in all cases to be adhered to though they may differ from scale measurements. In the absence of figured dimensions or in the case of doubt as to proper measurements, or in the case of any discrepancies between dimensions and drawings, the Architect is to be consulted. All dimensions and conditions shall be verified at the site by the Contractor, who is solely responsible for resolution of dimensional discrepancies without additional cost to the contract.

C. Detailed drawings take precedence over those of smaller scale. Specifications take precedence over drawings.

D. Work specified and not shown, or drawn and not specified, is to be executed as fully as if described in both ways; any work or material which is not directly or indirectly noted in the specifications and drawings, but is necessary for the proper carrying out of the obvious intention, is to be understood as implied and to be provided for by the Contractor in his Proposal as fully as if

specifically described or delineated. Any Discrepancy between drawings, or between drawings and specifications, must be reported to the Architect for correction and clarification before the work is executed.

E. The Contractor shall ensure that all his employees and subcontractors are furnished a copy of and are fully familiar with both the plans and specifications. A subcontractor's failure to read and coordinate both plans and specifications for his trade shall not relieve the General Contractor of the overall responsibility to ensure compliance with the more stringent of two differing requirements in the contract documents.

1.12 CONTRACTOR'S REPRESENTATIVES & EQUIPMENT

A. Superintendent: The Contractor shall give his personal superintendence to the Work or have a competent Superintendent, a minimum of 21 years old, maintaining the ability to communicate in both English and Spanish, and satisfactory to the Architect/Engineer and to the Owner, on the Work at all times during progress, with authority to act for him. All communications given to the Superintendent will be deemed to have been given to the Contractor. An approved Superintendent will not be removed from the Work by the Contractor without the approval of the Architect/Engineer, unless that Superintendent leaves the employ of the Contractor.

B. The Superintendent shall be present at the project site at all times that any work of this contract is underway. If the Superintendent is to be absent from the project site, the Contractor shall provide written notification to the Architect of a qualified replacement Superintendent at least 48 hours in advance. The replacement Superintendent shall be subject to the approval of the Architect and Owner. The only exception to this shall be when the Contractor, an officer of the company with a majority share of ownership, shall be permitted to act in place of the Superintendent.

C. No work shall be performed and no subcontractors shall be permitted to work at any time when the Superintendent is not present. This requirement applies to completion and correction of cited Punch list items at project closeout, until the time of Final Acceptance.

D. The Superintendent may not perform labor on the project and shall dedicate his full energies to coordination and supervision of the work. The Superintendent shall be equipped with a cellular telephone device at all times.

E. Equipment: The General Contractor shall provide and maintain two (2) telephone lines; one (1) dedicated to facsimile machine; a digital camera; and computer equipment connected to an internet service provider, during the duration of the project. The computer shall provide the capability to relay digital images and e-mail messages to TxDOT offices in Austin.

F. Special Superintendence Requirements:

1. Contractor shall provide full time Superintendence for all after-hours and weekend work performed for this project.
2. Contractor shall make the Superintendent available during daytime hours for Owner, A/E testing, observations, inspections, progress meetings, job conferences and other typical construction activities.
3. Superintendence shall be required to be in attendance for receipt of all on-site deliveries required by this contract.

1.13 ASBESTOS HAZARDS

A. No materials incorporated into this project shall contain asbestos in any form. Refer to Section 01310.

B. The EPA, in its publication entitled "Managing Asbestos in Place" provides a list of materials that can contain asbestos. For informational purposes, that list of products is repeated below:

- Cement Pipes
- Cement Wallboard
- Cement Siding
- Asphalt Floor Tile
- Vinyl Floor Tile
- Vinyl Sheet Flooring
- Flooring Backing
- Construction Mastics (floor tile, carpet, ceiling tile) etc.)
- Acoustical Plaster
- Decorative Plaster
- Textured Paints / Coatings
- Ceiling Tiles and Lay-in Panels
- Spray-Applied Insulation
- Blown-in Insulation
- Fireproofing Materials
- Taping Compounds (thermal)
- Packing Materials (for wall/floor
- Elevator Brake Shoes
- HVAC Duct Insulation
- Boiler Insulation
- Breeching Insulation
- Ductwork Flexible Fabric Connections
- Cooling Towers
- Pipe Insulation (corrugated air-cell, block etc.)
- Heating and Electrical Ducts
- Electrical Panel Partitions
- Electrical Cloth
- Electrical Wiring Insulation
- Chalkboards
- Roofing Shingles
- Roofing Felt
- Base Flashing
- Thermal Paper Products
- Fire Doors

penetrations)

- High Temperature Gaskets
- Laboratory Hoods / Table Tops
- Laboratory Gloves
- Fire Blankets
- Fire Curtains
- Elevator Equipment Panels
- Caulking / Putties
- Adhesives
- Wallboard
- Joint Compounds
- Vinyl Wall Coverings
- Spackling Compounds

1.14 ENVIRONMENTAL CONDITIONS

A. Construction Site Procedures: Contractor shall abide by the following procedures as is applicable to the specific project conditions:

1. Equipment Cleaning: Equipment shall be cleaned in a manner that does not create any discharge of cleaning agents, paints, oil or other pollutant to a storm sewer or waterway. Soaps and detergents shall not be discharged to the ground or off-site. When rinsing painting equipment outside, contain rinse water in a bucket or other container. Water based or latex paint rinse water may be discharged to the sanitary sewer. Oil-based paint wastes, including solvents and thinners, should not be disposed of in the sanitary sewer. They must be collected and disposed of through the Contractor's disposal company. Cement handling equipment should be not be rinsed on site.
2. Waste Disposal: Any trash or debris must be contained on-site and disposed of in a recycling bin or waste receptacle to prevent wind or rain from carrying it off-site into a storm drain or waterway. Petroleum wastes, such as waste oil and used oil filters, should be containerized for recycling or disposal by the Contractor. Non-hazardous solid wastes, such as general construction debris can be recycled or disposed of in the trash container. Never dispose of liquid wastes of any kind in dumpsters.
3. Sediment: Proper erosion and sedimentation controls must be in place to prevent sediment or silt run-off. Sediment (including cement) should never be rinsed off at the site; instead it should be cleaned up in a manner that does not allow it to reach a storm drain or waterway. Equipment tires may be rinsed before leaving the site to avoid tracking sediment into the roadway or off the site.
4. Site De-watering, Tank and Pipe Testing Discharges from de-watering, hydrostatic tank testing or pipe pressure testing must be free from sediment, chemicals, and any other pollutants. Some discharges may require governmental permits, to be paid for by the Contractor.
5. Petroleum: Spills of hydraulic fluid, oil and other petroleum products shall always be immediately cleaned up to prevent discharge of these fluids with storm water run-off.

B. Spill Disposal

1. The Contractor shall comply with all applicable provisions of local, state, and federal laws regarding the discharge of wastes into sewers and waterways. Special caution shall be exercised to prevent the discharge of wastes which contain oil, mud, cement, lime, or other materials which would degrade the water quality of the receiving watercourse. The Contractor shall construct and maintain oil interceptors, settling basins, or other effective pollution countermeasures.
2. Contaminated Material Disposal: Proper disposal of waste materials depends partly on the type of contaminant. Hazardous wastes (such as flammable petroleum products and solvents, thinners) and materials contaminated with hazardous wastes, are considered regulated wastes, and should be containerized for transport and disposal by a permitted company. Disposal also depends on the amount of contaminant.

C. Contractor Requirements and Responsibilities

1. Contractors are responsible for cleaning up and properly disposing of all spilled pollutants that are brought to the site, including oil, paint, fuels, antifreeze, solvents, etc. Keep accurate records (such as receipts, copies of analytical results, etc.) indicating proper disposal of spilled materials. Furthermore, Contractor is responsible for ensuring that all discharges from the site are in compliance with all applicable regulations.
2. In general no substance should be dumped or leaked onto the ground or allowed to run-off of a construction site that might cause pollution. Be aware that you are responsible for pollutant contaminated run-off and proper disposal of all your waste materials generated as a result of your activities.

1.15 WARRANTY

A. All work performed (including equipment and materials furnished) under this specification shall be 100% warranted for a minimum period of one (1) year from the date of Final Acceptance thereof against defective materials, design, unauthorized substitution, and improper installation. Upon receipt of notice of failure of any portion of the guaranteed systems and/or facilities during the warranty period, the affected portion or facilities shall be replaced or reworked promptly by and at the expense of the Contractor. Further, the Contractor shall properly obtain, execute, and forward any and all Manufacturer's warranties on equipment, materials, etc., furnished under the contract.

B. Comply with all Sections requiring more extended warranties.

PART 2 – NOT USED

END OF SECTION

SECTION 01004

SPECIFICATION OUTLINE

PART 1 - GENERAL

1.1 SUMMARY

A. The purpose of this section is to describe the organization and format to which the Specification has been prepared. This section is intended as an aid to the comprehension of the specification.

1.2 SPECIFICATION FORMAT

A. The Specification has been prepared in accordance with Construction Specifications Institute (CSI) Format.

B. The CSI format is subdivided into 16 major divisions. Divisions form the framework of this Specification and contain the technical requirements for the category of work within each division. Divisions that are not applicable to this specification are not used.

C. Sections within each division describe the specific requirements for different units of work based on trade or type of work. Sections within divisions are arranged in numerical order; however, section numbers may be assigned differently in separate divisions. Page numbering is subordinate to section numbering.

D. Sections are sub-divided into three distinct groupings of related information as follows:
1. Part 1 - GENERAL: Defines the administrative and procedural requirements unique to the section.
2. Part 2 - PRODUCTS: Details the quality and features of items required for the project.
3. Part 3 - EXECUTION: Details the incorporation of the products into the project.

Most sections contain all three sub-divisions; however, they are included only where needed. Paragraph designations are subordinate to sub-divisions.

E. Many sections do not stand alone and are related to other portions of the Subcontract documents. Some sections are specific extensions of, or are governed by the general requirements of Division 1. Requirements of the Subcontract Documents shall apply as a whole, regardless of any overlapping of various portions of the specification.

F. This specification has been written in the imperative mood and, in some cases, in a streamlined form. The imperative language is directed to the Contractor, unless specifically noted otherwise.

1.3 CLARIFICATIONS

A. Most sections begin with a paragraph in Part 1 entitled "Summary" or "Scope of Work". These paragraphs provide a brief description of the work specified in that Section. These descriptions are not intended to be all-inclusive, but provide a brief clarification of the particular subject matter in the specification.

B. Some technical sections contain a paragraph entitled "Related Sections" or "Related Work Specified Elsewhere". This paragraph lists some of the related work specified in other sections of the Subcontract Documents. These listings are not intended to be all-inclusive. They are presented as a means of aiding the Subcontractor in locating other specification sections containing work that has a close relationship with the work specified in that section. The requirements of the Subcontract Documents, including all specifications, shall apply as a whole.

C. Reference standards are incorporated into the specifications by reference number, title or other designations. The provisions of these standards become a part of the specification as though included in their entirety. When there is a conflict or discrepancy between a reference standard and the specification or with another reference standard, the more stringent requirements shall apply.

D. In the event of a Discrepancy between a drawing and the specification, the specification shall govern.

E. No typographical or other error on drawings shall relieve the Sub-Contractor from his responsibility to perform the intent of this Subcontract.

PART 2 – PRODUCTS (Not Used)

PART 3 – EXECUTION (Not Used)

END OF SECTION

SECTION 01200

PRICE AND PAYMENT PROCEDURES

PART 1 - GENERAL

1.1 SECTION INCLUDES

A. Schedule of values

B. Applications for payment

C. Change procedures

1.2 SCHEDULE OF VALUES

A. Submit printed schedule:
   1. Contractor's standard form or electronic media printout will be considered.

B. Coordination: Coordinate preparation of the Schedule of Values with preparation of Contractor's Construction Schedule.
   1. Correlate line items in the Schedule of Values with other required administrative forms and schedules, including the following:
      a. Application for Payment forms with Continuation Sheets
      b. Submittals Schedule
      c. Contractor's Construction Schedule
   2. Submit the Schedule of Values to the Architect in duplicate within 15 days after date of Owner-Contractor Agreement and the agreed upon finalized schedule of values no later than seven days before the date scheduled for submittal of initial Applications for Payment.

C. Format and Content: Use the Project Manual table of contents as a guide to establish line items for the Schedule of Values. Provide at least one line item for each Specification Section. Identify separately site mobilization, bonds and insurance, and a breakdown of the General Contractors general conditions.
   1. Identification: Include the following Project identification on the Schedule of Values:
      a. Project name and location
      b. Name of Architect
      c. TxDOT project number
      d. Contractor's name and address
      e. Date of submittal
   2. Arrange the Schedule of Values in tabular form with separate columns to indicate the following for each item listed:
      a. Related Specification Section or Division
      b. Description of the Work
      c. Change Orders (numbers) that affect value
      d. Dollar value

1) Percentage of the Contract Sum to nearest one-hundredth percent, adjusted to total 100 percent

3. Provide a breakdown of the Contract Sum in enough detail to facilitate continued evaluation of Applications for Payment and progress reports. Coordinate with the Project Manual table of contents. Provide several line items for principal subcontract amounts, where appropriate.
4. Round amounts to nearest whole dollar; total shall equal the Contract Sum.
5. Provide a separate line item in the Schedule of Values for each part of the Work where Applications for Payment may include materials or equipment purchased or fabricated and stored, but not yet installed.
   a. Differentiate between items stored on-site and items stored off-site. If specified, include evidence of insurance or bonded warehousing.
6. Provide separate line items in the Schedule of Values for initial cost of materials, for each subsequent stage of completion, and for total installed value of that part of the Work.
7. Provide separate line items in the Schedule of Values for each Allowance.
8. Each item in the Schedule of Values and Applications for Payment shall be complete. Include total cost and proportionate share of general overhead and profit for each item.
   a. Temporary facilities and other major cost items that are not direct cost of actual work-in-place may be shown either as separate line items in the Schedule of Values or distributed as general overhead expense, at Contractor's option.
9. Schedule Updating: Update and resubmit the Schedule of Values before the next Applications for Payment when Change Orders or Construction Change Directives result in a change in the Contract Sum.

1.3 APPLICATIONS FOR PAYMENT

A. Submit two copies of each application to Architect for review, 4 days prior to Payment Application Time.

B. Each Application for Payment shall be consistent with previous applications and payments as certified by Architect, TxDOT Project Manager, TxDOT District Representative and paid for by Owner.
   1. Initial Application for Payment, Application for Payment at time of Substantial Completion, and final Application for Payment involve additional requirements.

C. Payment Application Times: The date for each progress payment is indicated in the Agreement between Owner and Contractor. The period of construction Work covered by each Application for Payment is the period indicated in the Agreement.

D. Payment Application Forms: Use forms provided by Owner for Applications for Payment. Use TxDOT format.

E. Application Preparation: Complete every entry on form. Notarize and execute by a person authorized to sign legal documents on behalf of Contractor. Architect and TxDOT Project Manager will return incomplete applications without action.

1. Entries shall match data on the Schedule of Values and Contractor's Construction Schedule. Use updated schedules if revisions were made.
2. Include amounts of Change Orders and Construction Change Directives issued before last day of construction period covered by application.

F. Transmittal: Submit 5 signed and notarized original copies of each Application for Payment to Architect by a method ensuring receipt within 24 hours. One copy shall include waivers of lien and similar attachments if required.
1. Transmit each copy with a transmittal form listing attachments and recording appropriate information about application.

G. Waivers of Mechanic's Lien; with each Application for Payment, submit waivers of mechanic liens for subcontractors, sub-subcontractors, and suppliers for construction period covered by the previous application.
1. Submit partial waivers on each item.
2. When an application shows completion on an item, submit final or full waivers.
3. Owner reserves the right to designate which entities involved in the Work must submit waivers.
4. Submit final Application for Payment with or preceded by final waivers form every entity involved.
5. Waiver Forms: Submit waivers on lien on forms in a manner acceptable to the Owner.

H. Initial Application for Payment: Administrative actions and submittals that must precede or coincide with submittal of first Application for Payment include the following:
1. List of subcontractors
2. Schedule of Values
3. Contractor's Construction Schedule (preliminary if not final)
4. Products list
5. Schedule of unit prices
6. Submittals Schedule (preliminary if not final)
7. List of Contractor's staff assignments
8. List of Contractor's principal consultants
9. Copies of authorizations and licenses from authorities having jurisdiction for performance of the Work
10. Initial progress report
11. Report of preconstruction conference
12. Certificates of insurance and insurance policies
13. Performance and payment bonds
14. Data needed to acquire Owner's insurance

I. Application for Payment at Substantial Completion: After issuing the Certificate of Substantial Completion, submit an Application for Payment showing 100 percent completion for portion of the Work claimed as substantially complete.
1. Include documentation supporting claim that the Work is substantially complete and a statement showing an accounting of changes to the Contract Sum.
2. This application shall reflect Certificates of Partial Substantial Completion issued previously for Owner occupancy of designated portions of the Work.

J. Final Payment Application: Submit final Application for Payment with releases and supporting documentation not previously submitted and accepted, including, but not limited, to the following:
   1. Evidence of completion of Project closeout requirements
   2. Insurance certificates for products and completed operations where required and proof that fees and similar obligations were paid
   3. Updated final statement, accounting for final changes to the Contract Sum
   4. AIA Document G706, "Contractor's Affidavit of Payment of Debts and Claims"
   5. AIA Document G706A, "Contractor's Affidavit of Release of Liens"
   6. AIA Document G707, "Consent of Surety to Final Payment"
   7. Evidence that claims have been settled
   8. Final meter readings for utilities, a measured record of stored fuel, and similar data as of date of Substantial Completion or when Owner took possession of and assumed responsibility for corresponding elements of the Work
   9. Final, liquidated damages settlement statement

K. Submit updated two construction schedules with each Application for Payment.

L. Substantiating Data: When Architect/Engineer requires substantiating information, submit data justifying dollar amounts in question. Include the following with Application for Payment:
   1. Current construction photographs
   2. Construction progress schedules, revised and current

1.4 CHANGE PROCEDURES

A. Submittals: Submit name of individual authorized to receive change documents, and be responsible for informing others in Contractor's employ or Subcontractors of changes to the Work.

B. The Architect/Engineer will advise of minor changes in the Work not involving adjustment to Contract Sum/Price or Contract Time by issuing supplemental instructions.

C. Owner-Initiated Proposal Requests: Architect will issue a detailed description of proposed changes in the Work that may require adjustment to the Contract Sum or the Contract Time. If necessary, the description will include supplemental or revised Drawings and Specifications.
   1. Proposal Requests issued by Architect are for information only. Do not consider them instructions either to stop work in progress or to execute the proposed change.
   2. Within 10 days after receipt of Proposal Request, submit a quotation estimating cost adjustments to the Contract Sum and the Contract Time necessary to execute the change.
      a. Include a list of quantities of products required or eliminated and unit costs, with total amount of purchases and credits to be made. If requested, furnish survey data to substantiate quantities.
      b. Indicate applicable delivery charges, equipment rental, and amounts of trade discounts.
      c. Include costs of labor and supervision directly attributable to the change.

d. Include an updated Contractor's Construction Schedule that indicates the effect of the change, including, but not limited to, changes in activity duration, start and finish times, and activity relationship. Use available total float before requesting an extension of the Contract Time.

D. Contractor-Initiated Proposals: If latent or unforeseen conditions require modifications to the Contract, Contractor may propose changes by submitting a request for a change to Architect.
1. Include a statement outlining reasons for the change and the effect of the change on the Work. Provide a complete description of the proposed change. Indicate the effect of the proposed change on the Contract Sum and the Contract Time.
2. Include a list of quantities of products required or eliminated and unit costs, with total amount of purchases and credits to be made. If requested, furnish survey data to substantiate quantities.
3. Indicate applicable delivery charges, equipment rental, and amounts of trade discounts.
4. Include costs of labor and supervision directly attributable to the change.
5. Include an updated Contractor's Construction Schedule that indicates the effect of the change, including, but not limited to, changes in activity duration, start and finish times, and activity relationship. Use available total float before requesting an extension of the Contract Time.

E. Proposal Request Form: Use AIA Document G709 for Proposal Requests.
1. Document each quotation for change in cost or time with sufficient data to allow evaluation of quotation.

1.5 CHANGE ORDER PROCEDURES

A. On Owner's approval of a Proposal Request, Architect will issue a Change Order for signatures of Owner and Contractor on Owners appropriate form.
1. Execution of Change Orders: Architect/Engineer will issue Change Orders for signatures of parties as provided in Conditions of the Contract.

B. Correlation Of Contractor Submittals:
1. Promptly revise Schedule of Values and Application for Payment forms to record each authorized Change Order as separate line item and adjust Contract Sum/Price.
2. Promptly revise progress schedules to reflect change in Contract Time, revise sub-schedules to adjust times for other items of work affected by the change, and resubmit.
3. Promptly enter changes in Project Record Documents.

1.6 CONSTRUCTION CHANGE DIRECTIVE

A. Construction Change Directive: Architect may issue a Construction Change Directive. Construction Change Directive instructs Contractor to proceed with a change in the Work, for subsequent inclusion in a Change Order.

1. Construction Change Directive contains a complete description of change in the Work. It also designates method to be followed to determine change in the Contract Sum or the Contract Time.

B. Documentation: Maintain detailed records on a time and material basis of work required by the Construction Change Directive.
   1. After completion of change, submit an itemized account and supporting data necessary to substantiate cost and time adjustments to the Contract.

C. The Architect/Engineer will advise of minor changes in the Work not involving adjustment to Contract Sum/Price or Contract Time by issuing supplemental instructions.

PART 2 - PRODUCTS (Not Used)

PART 3 - EXECUTION (Not Used)

END OF SECTION

SECTION 01300

ADMINISTRATIVE REQUIREMENTS

PART 1 - GENERAL

1.1 RELATED SECTIONS

A. 01321 Construction Progress Documents

1.2 SECTION INCLUDES

A. Coordination and project conditions

B. Construction Layout

C. Field engineering

D. Preconstruction meeting

E. Progress meetings

F. Pre-installation meetings

G. Coordination meetings

1.3 COORDINATION AND PROJECT CONDITIONS

A. Coordinate scheduling, submittals, and Work of various sections of Project Manual to ensure efficient and orderly sequence of installation of interdependent construction elements, with provisions for accommodating items installed later.

B. Administrative Procedures: Coordinate scheduling and timing of required administrative procedures with other construction activities and activities of other contractors to avoid conflicts and to ensure orderly progress of the Work. Such administrative activities include, but are not limited to, the following:

1. Provide project superintendent and other supervisory personnel required for proper performance of the work.
2. Participate in a pre-construction meeting at a time and place determined by the Owner for the purpose of identifying responsibilities of the Owner’s and Architect’s personnel and explanation of administrative procedures.
3. Schedule and conduct monthly meetings, distribute meeting Minutes.
4. Schedule and conduct other meetings as necessary, distribute meeting Minutes.
5. Owner to schedule and conduct other meetings as necessary, the Owner will distribute meeting Minutes.
6. Preparation of Contractor's Construction Schedule.
7. Preparation of the Schedule of Values.
8. Installation and removal of temporary facilities and controls.

9. Preparation of the Submittal Review Schedule.
10. Delivery and processing of submittals.
11. Progress meetings.
12. Preinstallation conferences.
13. Project closeout activities.
14. Startup and adjustment of systems.
15. Project closeout activities.
16. Submit bar chart progress schedule, updated monthly.
17. Prepare submittal schedule coordinated with progress schedule.
18. Submit schedule of values, divided so as to facilitate payments to subcontractors, on forms acceptable to the Owner. Schedule, when approved, will be used as the basis for the Contractor's Application for payment.
19. Submit schedule of required tests.
20. Perform all field engineering, layout, and surveying required for layout of project.
21. Submit and post a list of emergency telephone numbers and addresses for individuals to be contacted in case of emergency.
22. Record drawings and specifications to be maintained and annotated by contractor as work progresses to record actual construction, and be turned over to the Architect at substantial completion. See Section 01700 for detailed requirements.
23. Submit payment request procedures.
24. Perform quality control during installation.
25. Clean and protect the work.

C. Conservation: Coordinate construction activities to ensure that operations are carried out with consideration given to conservation of energy, water, and materials.

D. Verify utility requirements and characteristics of operating equipment are compatible with building utilities. Coordinate work of various sections having interdependent responsibilities for installing, connecting to, and placing in service, operating equipment.

E. Coordinate space requirements, supports, and installation of mechanical and electrical Work indicated diagrammatically on Drawings. Follow routing shown for pipes, ducts, and conduit, as closely as practicable; place runs parallel with lines of building. Utilize spaces efficiently to maximize accessibility for other installations, for maintenance, and for repairs.

F. In finished areas except as otherwise indicated, conceal pipes, ducts, and wiring within construction. Coordinate locations of fixtures and outlets with finish elements.

G. Coordinate completion and clean-up of Work of separate sections in preparation for Substantial Completion and for portions of Work designated for Owner's partial occupancy.

H. After Owner occupies the premises any access to complete remaining Work or correct defective Work must be coordinated with the Owner's representative in order to minimize disruption of Owner's activities.

1.4 CONSTRUCTION LAYOUT

A. The General Contractor shall include in his bid the cost for providing all construction staking by a Registered Public Surveyor (Surveyor) licensed by Texas Board of Professional Land Surveyors who can demonstrate experience and competence to perform the work described. The grades, spot elevations, dimensions radii, flow line elevations, existing bench marks, excavation and site grading will be indicated on the plans. In the event that discrepancies are noted in the plans by the Contractor and/or the Surveyor, the Architect and/or Engineer of Record shall be notified and the discrepancies shall be resolved prior to proceeding with the Work. The Surveyor shall supervise the layout work and establish at least three (3) separate permanent bench marks, to which easy access may be had during the progress of the work, to determine and verify lines and grades.

B. Under the supervision of the Surveyor, the layout of the work shall be made from the surveyor-established base lines, utility alignments, curb faces, key trees, bench marks and all other control lines as indicated on the plans; and the Contractor shall be responsible for all measurements in connection therewith as specified and as indicated on the plans.

C. Contractor shall be responsible for having the Surveyor verify that elevations of form work and grading comply with the elevations, lines and grades shown on the plans and provide a report of findings to the Architect and/or Engineer of Record for consideration and response prior to placing concrete, placing asphalt or install landscaping. Contractor shall be responsible for making the required corrections prior to continuing the Work. No extra charge or compensations will be allowed due to differences between actual dimensions and the measurements indicated on the drawings.

D. Employ Land Surveyor registered and acceptable to the Owner.

E. Locate and protect survey control and reference points. Promptly notify Architect/Engineer of discrepancies discovered.

F. Control datum for survey is that established by Owner provided survey.

G. Verify set-backs and easements; confirm drawing dimensions and elevations.

H. Provide field engineering services. Establish elevations, lines, and levels, utilizing recognized engineering survey practices.

I. Submit copy of site drawing signed by Land Surveyor certifying elevations and locations of the Work are in conformance with Contract Documents.

J. Maintain complete and accurate log of control and survey work as Work progresses.

K. Protect survey control points prior to starting site work; preserve permanent reference points during construction.

L. Promptly report to Architect/Engineer loss or destruction of reference point or relocation required because of changes in grades or other reasons.

M. Replace dislocated survey control points based on original survey control. Make no changes without prior written notice to Architect/Engineer.

1.5 PRECONSTRUCTION MEETING

A. The Owner's Representative will schedule a pre-construction conference and organizational meeting at the Project Site or other convenient location after execution of the Agreement and prior to commencement of construction activities. The Owner's Representative will conduct the meeting to review responsibilities and personnel assignments.

B. Attendees shall include: The Owner, Architect/Engineer and their consultants, the Contractor and its superintendent, major subcontractors, manufacturers, suppliers and other concerned parties shall each be represented at the conference by persons familiar with and authorized to conclude matters relating to the Work.

C. The Agenda shall: Discuss items of significance that could affect progress including such topics as:
1. Tentative construction schedule
2. Critical Work sequencing
3. Designation of responsible personnel
4. Procedures for processing field decisions and Change Orders
5. Procedures for processing Applications for Payment
6. Distribution of Contract Documents
7. Submittal of Shop Drawings, Product Data and Samples
8. Preparation of record documents
9. Use of the premises
10. Office, Work and storage areas
11. Equipment deliveries and priorities
12. Safety procedures
13. First Aid
14. Security
15. Housekeeping
16. Working hours

D. The Owner's Representative will record Minutes and distribute copies within five days after meeting to participants, with copies to contractor and those affected by decisions made.
1. General Contractor will distribute Minutes to others.

1.6 PROGRESS MEETINGS

A. Schedule and administer meetings throughout progress of the Work at maximum bi-weekly intervals.
1. Coordinate dates of meetings with preparation of payment requests.

B. Make arrangements for meetings, prepare agenda with copies for participants, preside at meetings.

C. Attendance Required: Job superintendent, major subcontractors and suppliers, Owner, Architect/Engineer, as appropriate to agenda topics for each meeting.

D. Agenda:
1. Review of Minutes of previous meetings
2. Review of Work progress
3. Field observations, problems, and decisions
4. Identification of problems impeding planned progress
5. Review of submittals schedule and status of submittals
6. Review of off-site fabrication and delivery schedules
7. Maintenance of progress schedule
8. Corrective measures to regain projected schedules
9. Planned progress during succeeding work period
10. Coordination of projected progress
11. Maintenance of quality and work standards
12. Effect of proposed changes on progress schedule and coordination
13. Other business relating to Work

E. Record Minutes and distribute copies within three days after meeting to participants, with copies to Architect/Engineer, Owner, and those affected by decisions made.

1.7 PRE-INSTALLATION MEETINGS

A. When required in individual specification sections, convene pre-installation meetings at Project site prior to commencing work of specific section.

B. Require attendance of parties directly affecting, or affected by, Work of specific section.

C. Notify Architect/Engineer and Owner 14 days in advance of meeting date.

D. Prepare agenda and preside at meeting:
1. Review conditions of installation, preparation and installation procedures.
2. Review coordination with related work.
   a. Contract documents
   b. Options
   c. Related Change Orders
   d. Purchases
   e. Deliveries
   f. Shop Drawings, Product Data and Quality Control Samples
   g. Possible Conflicts
   h. Compatibility Problems
   i. Time Schedules
   j. Weather Limitations
   k. Manufacturer's Recommendations
   l. Compatibility of Materials

m. Acceptability of Substrates
n. Temporary Facilities
o. Space and Access Limitations
p. Governing Regulations
q. Safety
r. Inspection and Testing Requirements
s. Recording Requirements
t. Protection

E. Record Minutes and distribute copies within three days after meeting to participants, with copies to Architect/Engineer, Owner, and those affected by decisions made.
1. Do not proceed if the conference cannot be successfully concluded.
2. Initiate whatever actions are necessary to resolve impediments to performance of Work and reconvene the conference at the earliest feasible date.

1.8 COORDINATION MEETINGS

A. Conduct project coordination meetings at regularly scheduled times convenient for all parties involved. Project Coordination meetings are in addition to specific meetings held for other purposes, such as regular progress meetings and specific pre-installation conferences.

B. Request representation at each meeting by every party currently involved in coordination or planning for the construction activities involved.

C. Record meeting decisions or action and distribute copies to everyone in attendance and to others affected by those decisions or actions resulting from each meeting.

PART 2 - PRODUCTS (Not Used)

PART 3 - EXECUTION (Not Used)

END OF SECTION

SECTION 01320

ALLOWANCES

PART 1 - GENERAL

1.1 SECTION INCLUDES

A. This section includes administrative and procedural requirements governing allowances.

Item 1. Certain materials and equipment are specified in the Contract Documents by allowances. These allowances include installation. Allowances have been established in lieu of additional requirements and to defer selection of actual materials and equipment to a later date when additional information is available. If necessary, additional requirements will be issued by Change Order.

B. Types of allowances include the following:

Item 1. Lump Sum allowances based on section 3.3 Schedule of Allowances.

1.2 SELECTION AND PURCHASE

A. At the earliest practical date after award of the Contract, advice Owner of the date when final selection and purchase of each product or system described by an allowance must be completed to avoid delaying the Work.

B. Purchase products and systems selected by Owner from the designated supplier.

1.3 SUBMITTALS

A. Submit proposals for purchase of products or systems included in allowance, in the form specified for Change Orders.

B. Submit invoices of delivery slips to show actual quantities of materials delivered to the site for use in fulfillment of each allowance.

PART 2 - PRODUCTS (Not Used)

PART 3 - EXECUTION

3.1 EXAMINATION

A. Examine products covered by an allowance promptly on delivery for damage or defects. Return damaged or defective products to Manufacturer for replacement.

3.2 PREPARATION

A. Coordinate materials and their installation for each allowance with related materials and installations to ensure that each allowance item is completely integrated and interfaced with related work.

3.3 SCHEDULE OF ALLOWANCES: The following allowance items are in addition to any of the items required, implied, or indicated by the final plans and specifications to be provided. Installation of an allowance item shall be in accordance with the plans and specifications. The cost for the allowance items is to be included in the Total Lump Sum Bid amount for this project. The use and location of an allowance item will be as directed by the Owner. The unit price for an allowance item will be used to determine both "add" and "deduct" pricing during the Contract Time. Owner will be credited for unused allowance items at the completion of the project using the unit price as the basis of credit.

Item 1. The General Contractor will provide an allowance of **5** installations of free-standing (floor to ceiling), "dedicated circuit" power poles complete and operable. Each installation shall include but not be limited to: 20 amp branch circuit breaker, run of up to 150 feet of conduit, ceiling J-Box, run of up to 20 feet of flex conduit, and (3) #10 AWG copper conductors. Wire AWG sizes specified are minimum and shall be increased in size in accordance with NEC requirements when applicable at no additional cost. The power poles shall be Wire mold Model No. 25DTP-4 or approved equal.

Item 2. The General Contractor will provide an allowance of **5** installations of electrical circuits and connections of modular furniture power poles and/or base power feeds. Each installation shall include but not be limited to: 4 - 20 amp branch circuit breakers, up to 150 feet of conduit, up to 4 ceiling / wall J-Box(s), up to 20 feet of flex conduit per J-Box, and (6) #10 and (2) # 12 AWG copper conductors color coded as specified. For base power feed installation in wall raceway and wall box shall be included. Wire AWG sizes specified are minimum and shall be increased in size in accordance with the requirements of the Note following the table titled "Texas Department of Transportation Wire Standard". Surface mounted raceway may be used in lieu of in wall raceway and wall box for base power feed only in locations approved by the Owner at no additional cost.

Item 3. The General Contractor will provide an allowance of **5** installations of modular furniture voice/data outlets. Installation of a voice/data outlet shall include all items specified, ancillary to, and necessary for complete and operable voice and data network circuits. Each installation shall include but not be limited to up to 325 feet of each cable required per outlet installation.

Item 4. The General Contractor will provide an allowance of **5** installations of wall mounted voice/data outlets. Installation of a voice/data outlet shall include all items specified, ancillary to, and necessary for complete and operable voice and data network circuits. Each installation shall include but not be limited to up to 325 feet of each cable required per outlet installation. In wall raceway installation shall include back

box, ¾" conduit, pull cord, insulated bushing and any items necessary for a complete raceway installation.

Item 5. The General Contractor will provide an allowance of **2** installations of an interior solid core doors hollow metal frames, and complete hardware sets. Installation of an interior solid core door, hollow metal frame, and complete hardware set shall include all items specified, ancillary to, and necessary for a complete, finished, and operable interior door. Installation of an interior solid core door shall include, but not be limited to, solid core door, hollow metal frame, butts, lockset, silencers, door stop, door closer, and finishes.

Item 6. The General Contractor will provide an allowance of **20** linear feet of ceiling height metal stud drywall partition installations, 3 5/8, 25 gauge metal stud at 16" o.c. Installation of a ceiling height metal stud drywall partition shall include all items specified, ancillary to, and necessary for complete installation to include, but not be limited to, taped, floated, textured, painted, base, and ceiling and flooring adjustments.

Item 7. The General Contractor will provide an allowance of **5** single pole light switch installations. Installation of single pole light switch shall include all items specified, ancillary to, and necessary for complete installation to include, but not be limited to, single pole switch, box(s), conduit, fittings, wire, connections, and face plate.

Item 8. The General Contractor will provide an allowance of **5** single circuit wall receptacle installations. Installation of single circuit wall receptacle shall include all items specified, ancillary to, and necessary for complete installation to include, but not be limited to, receptacle, box(s), conduit, fittings, wire, connections, circuit breaker, and face plate.

Item 9. The General Contractor will provide an allowance of **5** single wall receptacle installations. Installation of single wall receptacle shall include all items specified, ancillary to, and necessary for complete installation to include, but not be limited to, receptacle, box(s), conduit, fittings, wire, connections, face plate, and one circuit breaker per 8 receptacles.

Item 10. The General Contractor will provide an allowance of **5** fluorescent 2 x 4 lay in light fixture installations. Installation of fluorescent light fixture shall include all items specified, ancillary to, and necessary for complete installation to include, but not be limited to, fluorescent light fixture, box(s), flex conduit, fittings, wire, and connections.

Item 11. The General Contractor will provide an allowance of **100** l.f. of security fencing installation. Installation of security fencing shall include all items specified, ancillary to, and necessary for a complete installation.

Item 12. The General Contractor will provide an allowance of **100** s.f. of Vinyl Composition Tile (VCT) and 50 l.f. of rubber base installation. Installation of VCT and rubber base

shall include all items specified, ancillary to, and necessary for a complete installation.

Item 13. The General Contractor will provide an allowance of **450** Square Yards of Asphalt Paving and Flexible Base. Installation of Asphalt Pavement and Flexible Base material shall include all items specified, ancillary to, and necessary for a complete installation.

Item 14. $50,000 Landscape Allowance for Plants and sod around building. See Landscape Plans for detailed specifications.

END OF SECTION

SECTION 01321

CONSTRUCTION PROGRESS DOCUMENTATION

PART 1 - GENERAL

1.1 RELATED DOCUMENTS

A. Drawings and general provisions of the Contract, including General and Supplementary Conditions and other Division 1 Specification Sections, apply to this Section.

1.2 SUMMARY

A. This Section includes administrative and procedural requirements for documenting the progress of construction during performance of the Work, including the following:
   1. Contractor's Construction Schedule
   2. Submittals Schedule
   3. Daily construction reports
   4. Field condition reports
   5. Special reports

B. Related Sections include the following:
   1. Division 1 Section "Payment Procedures" for submitting the Schedule of Values
   2. Division 1 Section "Project Management and Coordination" for submitting and distributing meeting and conference minutes
   3. Division 1 Section "Submittal Procedures" for submitting schedules and reports
   4. Division 1 Section "Quality Requirements" for submitting a schedule of tests and inspections

1.3 SUBMITTALS

A. Submittals Schedule: Submit four copies of schedule and electronic file in MS Office Project. Arrange the following information in a tabular format:
   1. Scheduled date for first submittal
   2. Specification Section number and title
   3. Submittal category (action or informational)
   4. Name of subcontractor
   5. Description of the Work covered
   6. Scheduled date for Architect's final release or approval

B. Contractor's Construction Schedule: Submit four opaque copies of initial schedule, large enough to show entire schedule for entire construction period.

C. CPM Reports: Concurrent with CPM schedule, submit four copies of each of the following computer-generated reports. Format for each activity in reports shall contain activity number, activity description, cost and resource loading, original duration, remaining duration, early start date, early finish date, late start date, late finish date, and total float in calendar days.
   1. Activity Report: List of all activities sorted by activity number and then early start date, or actual start date if known.

2. Logic Report: List of preceding and succeeding activities for all activities, sorted in ascending order by activity number and then early start date, or actual start date if known.
3. Total Float Report: List of all activities sorted in ascending order of total float.
4. Earnings Report: Compilation of Contractor's total earnings from the Notice to Proceed until most recent Application for Payment.

D. Daily Construction Reports: Submit two copies at monthly intervals, when requested.

E. Field Condition Reports: Submit two copies at time of discovery of differing conditions.

F. Special Reports: Submit two copies at time of unusual event.

1.4 COORDINATION

A. Coordinate preparation and processing of schedules and reports with performance of construction activities and with scheduling and reporting of separate contractors.

B. Coordinate Contractor's Construction Schedule with the Schedule of Values, list of subcontracts, Submittals Schedule, progress reports, payment requests, and other required schedules and reports.
1. Secure time commitments for performing critical elements of the Work from parties involved.
2. Coordinate each construction activity in the network with other activities and schedule them in proper sequence.

PART 2 - PRODUCTS

2.1 SUBMITTALS SCHEDULE

A. Preparation: Submit a schedule of submittals, arranged in chronological order by dates required by construction schedule. Include time required for review, resubmittal, ordering, manufacturing, fabrication, and delivery when establishing dates.
1. Coordinate Submittals Schedule with list of subcontracts, the Schedule of Values, and Contractor's Construction Schedule.
2. If a Preliminary Construction Schedule is not required, delete subparagraph below or revise to require initial submittal within 14 days of date established for commencement of the Work.
3. Delete subparagraph below if not allowed.
4. Revise subparagraph below if schedule must be continuously updated to reflect current status and changes in timing for submittals.
5. Final Submittal: Submit concurrently with the first complete submittal of Contractor's Construction Schedule.

2.2 CONTRACTOR'S CONSTRUCTION SCHEDULE, GENERAL

A. Procedures: Comply with procedures contained in AGC's "Construction Planning & Scheduling."

B. Time Frame: Extend schedule from date established for the Notice to Proceed to date of Substantial Completion.
   1. Contract completion date shall not be changed by submission of a schedule that shows an early completion date, unless specifically authorized by Change Order.

C. Activities: Treat each separate area as a separate numbered activity for each principal element of the Work. Comply with the following:
   1. Activity Duration: Define activities so no activity is longer than 20 days, unless specifically allowed by Architect.
   2. Procurement Activities: Include procurement process activities for the following long lead items and major items, requiring a cycle of more than 60 days, as separate activities in schedule. Procurement cycle activities include, but are not limited to, submittals, approvals, purchasing, fabrication, and delivery.
   3. Submittal Review Time: Include review and resubmittal times indicated in Division 1 Section "Submittal Procedures" in schedule. Coordinate submittal review times in Contractor's Construction Schedule with Submittals Schedule.
   4. Startup and Testing Time: Include not less than seven days for startup and testing.
   5. Substantial Completion: Indicate completion in advance of date established for Substantial Completion, and allow time for Architect's and TxDOT Project Manager administrative procedures necessary for certification of Substantial Completion.

D. Constraints: Include constraints and work restrictions indicated in the Contract Documents and as follows in schedule, and show how the sequence of the Work is affected.
   1. Phasing: Arrange list of activities on schedule by phase.
   2. Products Ordered in Advance: Include a separate activity for each product. Include delivery date indicated in Division 1 Section "Summary." Delivery dates indicated stipulate the earliest possible delivery date.
   3. Owner-Furnished Products: Include a separate activity for each product. Include delivery date indicated in Division 1 Section "Summary." Delivery dates indicated stipulate the earliest possible delivery date.
   4. Work Restrictions: Show the effect of the following items on the schedule:
      a. Seasonal variations
      b. Environmental control
   5. Work Stages: Indicate important stages of construction for each major portion of the Work, including, but not limited to, the following:
      a. Submittals
      b. Mockups
      c. Fabrication
      d. Sample testing
      e. Deliveries
      f. Installation
      g. Tests and inspections
      h. Adjusting
      i. Curing
      j. Startup and placement into final use and operation
   6. Area Separations: Identify each major area of construction for each major portion of the Work. Indicate where each construction activity within a major area

must be sequenced or integrated with other construction activities to provide for the following:

a. Structural completion
b. Permanent space enclosure
c. Completion of mechanical installation
d. Completion of electrical installation
e. Substantial Completion

E. Milestones: Include milestones indicated in the Contract Documents in schedule, including, but not limited to, the Notice to Proceed, Substantial Completion, and Final Completion.
First paragraph below establishes progress measured in dollar volume of the Work.

F. Cost Correlation: At the head of schedule, provide a cost correlation line, indicating planned and actual costs. On the line, show dollar volume of the Work performed as of dates used for preparation of payment requests.

1. Refer to Division 1 Section "Payment Procedures" for cost reporting and payment procedures.
2. Retain three subparagraphs below for CPM schedule.
3. Contractor shall assign cost to construction activities on the CPM schedule. Costs shall not be assigned to submittal activities unless specified otherwise but may, with Architect's approval, be assigned to fabrication and delivery activities. Costs shall be under required principal subcontracts for testing and commissioning activities, operation and maintenance manuals, punch list activities, Project Record Documents, and demonstration and training (if applicable), in the amount of 5 percent of the Contract Sum.
4. Each activity cost shall reflect an accurate value subject to approval by Architect.
5. Total cost assigned to activities shall equal the total Contract Sum.

G. Contract Modifications: For each proposed contract modification and concurrent with its submission, prepare a time-impact analysis using fragnets to demonstrate the effect of the proposed change on the overall project schedule.

2.3 CONTRACTOR'S CONSTRUCTION SCHEDULE (CPM SCHEDULE)

A. General: Prepare network diagrams using AON (activity-on-node) format.

B. Projects using CPM schedules should begin with a preliminary network diagram of type described below or a preliminary bar-chart schedule.

C. Preliminary Network Diagram: Submit diagram within 14 days of date established for the Notice to Proceed. Outline significant construction activities for the first 60 days of construction. Include skeleton diagram for the remainder of the Work and a cash requirement prediction based on indicated activities.

D. Revise paragraph and subparagraphs below to suit Project.

E. CPM Schedule: Prepare Contractor's Construction Schedule using a computerized, time-scaled CPM network analysis diagram for the Work.

1. Develop network diagram in sufficient time to submit CPM schedule so it can be accepted for use no later than 14 days after date established for the Notice to Proceed.
    a. Failure to include any work item required for performance of this Contract shall not excuse Contractor from completing all work within applicable completion dates, regardless of Architect's approval of the schedule.
2. Establish procedures for monitoring and updating CPM schedule and for reporting progress. Coordinate procedures with progress meeting and payment request dates.
3. Use "one workday" as the unit of time. Include list of nonworking days and holidays incorporated into the schedule.

F. CPM Schedule Preparation: Prepare a list of all activities required to complete the Work. Using the preliminary network diagram, prepare a skeleton network to identify probable critical paths.
1. Activities: Indicate the estimated time duration, sequence requirements, and relationship of each activity in relation to other activities. Include estimated time frames for the following activities:
    a. Preparation and processing of submittals
    b. Mobilization and demobilization
    c. Purchase of materials
    d. Delivery
    e. Fabrication
    f. Installation
    g. Testing
2. Critical Path Activities: Identify critical path activities, including those for interim completion dates. Scheduled start and completion dates shall be consistent with Contract milestone dates.
3. Processing: Process data to produce output data on a computer-drawn, time-scaled network. Revise data, reorganize activity sequences, and reproduce as often as necessary to produce the CPM schedule within the limitations of the Contract Time.
4. Format: Mark the critical path. Locate the critical path near center of network; locate paths with most float near the edges.
    a. Subnetworks on separate sheets are permissible for activities clearly off the critical path.

G. Initial Issue of Schedule: Prepare initial network diagram from a list of straight "early start-total float" sort. Identify critical activities. Prepare tabulated reports showing the following:
1. Contractor or subcontractor and the Work or activity
2. Description of activity
3. Principal events of activity
4. Immediate preceding and succeeding activities
5. Early and late start dates
6. Early and late finish dates
7. Activity duration in workdays
8. Total float or slack time
9. Average size of workforce

10. Dollar value of activity (coordinated with the Schedule of Values)

H. Schedule Updating: Concurrent with making revisions to schedule, prepare tabulated reports showing the following:
1. Identification of activities that have changed
2. Changes in early and late start dates
3. Changes in early and late finish dates
4. Changes in activity durations in workdays
5. Changes in the critical path
6. Changes in total float or slack time
7. Changes in the Contract Time

2.4 REPORTS

A. Daily Construction Reports: Prepare a daily construction report recording the following information concerning events at Project site:
1. List of subcontractors at Project site
2. Approximate count of personnel at Project site
3. Material deliveries
4. High and low temperatures and general weather conditions
5. Accidents
6. Meetings and significant decisions
7. Unusual events (refer to special reports)
8. Stoppages, delays, shortages, and losses
9. Emergency procedures
10. Orders and requests of authorities having jurisdiction
11. Change Orders received and implemented
12. Construction Change Directives are used by AIA Document A201
EJCDC Document 1910-8 uses Work Change Directives
13. Construction Change Directives received and implemented
14. Services connected and disconnected
15. Equipment or system tests and startups
16. Substantial Completions authorized

B. Field Condition Reports: Immediately on discovery of a difference between field conditions and the Contract Documents, prepare and submit a detailed report. Submit with a request for interpretation on CSI Form 13.2A. Include a detailed description of the differing conditions, together with recommendations for changing the Contract Documents.

2.5 SPECIAL REPORTS

A. General: Submit special reports directly to Owner within one day(s) of an occurrence. Distribute copies of report to parties affected by the occurrence.

B. Retain paragraph below if Owner is unusually sensitive about public relations.

C. Reporting Unusual Events: When an event of an unusual and significant nature occurs at Project site, whether or not related directly to the Work, prepare and submit a special report. List chain of events, persons participating, response by Contractor's personnel,

evaluation of results or effects, and similar pertinent information. Advise Owner in advance when these events are known or predictable.

PART 3 - EXECUTION

3.1 CONTRACTOR'S CONSTRUCTION SCHEDULE

A. Contractor's Construction Schedule Updating: At monthly intervals, update schedule to reflect actual construction progress and activities. Issue schedule one week before each regularly scheduled progress meeting.
   1. Revise schedule immediately after each meeting or other activity where revisions have been recognized or made. Issue updated schedule concurrently with the report of each such meeting.
   2. Include a report with updated schedule that indicates every change, including, but not limited to, changes in logic, durations, actual starts and finishes, and activity durations.
   3. As the Work progresses, indicate Actual Completion percentage for each activity.

B. Distribution: Distribute copies of approved schedule to Architect, Owner, separate contractors, testing and inspecting agencies, and other parties identified by Contractor with a need-to-know schedule responsibility.
   1. Post copies in Project meeting rooms and temporary field offices.
   2. When revisions are made, distribute updated schedules to the same parties and post in the same locations. Delete parties from distribution when they have completed their assigned portion of the Work and are no longer involved in performance of construction activities.

C. Distribution: Provide electronic copy to Architect in MS Office Project format.

END OF SECTION

SECTION 01330

SUBMITTAL PROCEDURES

PART 1 - GENERAL

1.1 SECTION INCLUDES

A. Submittal procedures

B. Construction progress schedules

C. Proposed products list

D. Subcontractor List

E. Product data

F. Shop drawings

G. Samples

H. Design data

I. Test reports

J. Certificates

K. Manufacturer's instructions

L. Manufacturer's field reports

M. Erection drawings

N. Construction photographs

O. Project Warranty And Maintenance Manual

1.2 SUBMITTAL PROCEDURES

A. General: Electronic copies of CAD Drawings of the Contract Drawings will not be provided by Architect for Contractor's use in preparing submittals. A submittal schedule spreadsheet document 01330B outlining all section 2 through 16 submittals required is attached to the end of this section. The electronic version of this spreadsheet will be provided to the Contractor at the Pre-Construction meeting to use during the project.

B. Coordination: Coordinate preparation and processing of submittals with performance of construction activities.

1. Coordinate each submittal with fabrication, purchasing, testing, delivery, other submittals, and related activities that require sequential activity.
2. Coordinate transmittal of different types of submittals for related parts of the Work so processing will not be delayed because of need to review submittals concurrently for coordination.
    a. Architect reserves the right to withhold action on a submittal requiring coordination with other submittals until related submittals are received.

C. Processing Time: Allow enough time for submittal review, including time for resubmittals, as follows. Time for review shall commence on Architect's receipt of submittal. No extension of the Contract Time will be authorized because of failure to transmit submittals enough in advance of the Work to permit processing, including resubmittals.
1. Initial Review: Allow 21 days for initial review of each submittal. Allow additional time if coordination with subsequent submittals is required. Architect will advise Contractor when a submittal being processed must be delayed for coordination.
2. Intermediate Review: If intermediate submittal is necessary, process it in same manner as initial submittal.
3. Resubmittal Review: Allow 15 days for review of each resubmittal.
4. Concurrent Consultant Review: Where the Contract Documents indicate that submittals may be transmitted simultaneously to Architect and to Architect's consultants, allow 21 days for review of each submittal. Submittal will be returned to Architect before being returned to Contractor.
5. Schedule submissions at least 40 days before reviewed submittals will be needed, in accordance with the above review times noted above (the above allows for one resubmittal review and distribution) and approved submittal schedule.

D. Insert list of submittals below allowing concurrent review or delete and identify submittals in Sections where they are specified. Structural, mechanical, plumbing, and electrical components are examples of the Work that often require simultaneous transmittal to Architect and consultants.

E. Apply Contractor's stamp, signed or initialed certifying that review, approval, verification of products required, field dimensions, adjacent construction Work, and coordination of information is in accordance with requirements of the Work and Contract Documents.
1. Coordinate each submittal with requirements of work of Contract Documents.
2. Contractor’s responsibility for errors and omissions in submittals is not relieved by Architect’s review of submittals.
3. Contractor’s responsibility for deviations in submittals from requirements of Contract Documents is not relieved by Architect’s review of submittals, unless Architect gives written acceptance of specific deviations.
4. Notify Architect, in writing at time of submission, of deviations in submittals from requirements of Contract Documents.

F. Identification: Place a permanent label or title block on each submittal for identification.
1. Indicate name of firm or entity that prepared each submittal on label or title block.

2. Provide a space approximately 6 by 8 inches on label or beside title block to record Contractor's review and approval markings and action taken by Architect.
3. Include the following information on label for processing and recording action taken:
    a. Project name
    b. Date
    c. Name and address of Architect
    d. Name and address of Contractor
    e. Name and address of Subcontractor
    f. Name and address of Supplier
    g. Name of Manufacturer
    h. Submittal number or other unique identifier, including revision identifier.
        1) Submittal number shall use Specification Section number followed by a decimal point and then a sequential number (e.g., 06100.01). Resubmittals shall include an alphabetic suffix after another decimal point (e.g., 06100.01.A).
    i. Number and title of appropriate Specification Section
    j. Drawing number and detail references, as appropriate
    k. Location(s) where product is to be installed, as appropriate
    l. Other necessary identification

G. Deviations: Highlight, encircle, or otherwise specifically identify deviations from the Contract Documents on submittals.

H. Additional Copies: Unless additional copies are required for final submittal, and unless Architect observes noncompliance with provisions in the Contract Documents, initial submittal may serve as final submittal.
1. Submit one copy of submittal to concurrent reviewer in addition to specified number of copies to Architect.
2. Additional copies submitted for maintenance manuals will not be marked with action taken and will be returned.

I. Transmittal: Package each submittal individually and appropriately for transmittal and handling. Transmit each submittal using a transmittal form. Architect will return submittals, without review, received from sources other than Contractor.
1. Transmittal Form: Use form acceptable to the Owner and Architect. Provide locations on form for the following information:
    a. Project name
    b. Date
    c. Destination (To)
    d. Source (from)
    e. Names of Subcontractor, Manufacturer, and Supplier
    f. Category and type of submittal
    g. Submittal purpose and description
    h. Specification Section number and title
    i. Drawing number and detail references
    j. Transmittal number, numbered consecutively
    k. Submittal and transmittal distribution record
    l. Remarks

m. Signature of Transmitter

2. On an attached separate sheet, prepared on Contractor's letterhead, record relevant information, requests for data, revisions other than those requested by Architect on previous submittals, and deviations from requirements in the Contract Documents, including minor variations and limitations. Include same label information as related submittal.

J. Resubmittals: Make resubmittals in same form and number of copies as initial submittal.
1. When revised for resubmission, identify changes made since previous submission.
2. Mark revised submittals with original number and sequential alphabetic suffix. Note date and content of previous submittal.
3. Note date and content of revision in label or title block and clearly indicate extent of revision.

K. Allow space on submittals for Contractor and Architect/Engineer review stamps.

L. Resubmit submittals until they are marked ‘REVIEWED’.

M. Distribution: Furnish copies of final submittals to Manufacturers, Subcontractors, Suppliers, Fabricators, Installers, authorities having jurisdiction, and others as necessary for performance of construction activities. Show distribution on transmittal forms.
1. Distribute copies of reviewed submittals as appropriate. Instruct parties to promptly report inability to comply with requirements.

N. Use for Construction: Use only final submittals with mark indicating ‘REVIEWED’.
1. Begin no work which requires submittals until return of submittals with Architect’s stamp and initials or signature indicating review.

O. Submittals not requested will not be recognized or processed.

1.3 CONSTRUCTION PROGRESS SCHEDULES

A. Submit preliminary outline Schedules within 15 days after date of Owner-Contractor Agreement for coordination with Owner's requirements. After review, submit detailed schedules within 7 days modified to accommodate revisions recommended by Architect/Engineer and Owner.

B. Related Section 01321 – Construction Progress Documentation: Submit revised Progress Schedules with each Application for Payment.

C. Distribute copies of reviewed schedules to Project site file, Subcontractors, Suppliers, and other concerned parties.

D. Instruct recipients to promptly report, in writing, problems anticipated by projections indicated in schedules.

E. Submit computer generated horizontal bar chart or other approved form with separate line for each section of Work, identifying first work day of each week.

F. Show complete sequence of construction by activity, identifying Work of separate stages and other logically grouped activities. Indicate early and late start, early and late finish, float dates, and duration.

G. Indicate estimated percentage of completion for each item of Work at each submission.

H. Submit separate schedule of submittal dates for shop drawings, product data, and samples, including Owner furnished products and products identified under Allowances, and dates reviewed submittals will be required from Architect/Engineer. Indicate decision dates for selection of finishes.

I. Indicate delivery dates for Owner furnished products and products identified under Allowances.

J. Revisions To Schedules:
   1. Indicate progress of each activity to date of submittal, and projected completion date of each activity.
   2. Identify activities modified since previous submittal, major changes in scope, and other identifiable changes.
   3. Prepare narrative report to define problem areas, anticipated delays, and impact on Schedule. Report corrective action taken, or proposed, and its effect including effect of changes on schedules of separate Contractors.

1.4 PROPOSED PRODUCTS LIST

A. Within 15 days after date of Owner-Contractor Agreement, submit list of major products proposed for use, with name of Manufacturer, trade name, and model number of each product.

B. For products specified only by reference standards, give Manufacturer, trade name, model or catalog designation, and reference standards.

1.5 SUBCONTRACTOR LIST

A. Prepare a written summary identifying individuals or firms proposed for each portion of the Work, including those who are to furnish products or equipment fabricated to a special design. Include the following information in tabular form:
   1. Name, address, and telephone number of entity perform subcontract or supplying products
   2. Number and title of related Specification Sections(s) cover by Subcontractor
   3. Drawing number and detail references, as appropriate, covered by subcontract

B. Submit three copies of Subcontractor list, unless otherwise indicated. Architect will return two copies.
   1. Mark up and retain one returned copy as a Project Record Document.

1.6 PRODUCT DATA

A. General: Prepare and submit Action Submittals required by individual Specification Sections.

B. Product Data: Submit to Architect/Engineer for review for limited purpose of checking for conformance with information given and design concept expressed in Contract Documents.

C. Submit number three Contractor copies, plus two copies Architect/Engineer will retain.

D. Mark each copy to identify applicable products, models, options, and other data. Supplement Manufacturers' standard data to provide information specific to this Project.

E. Indicate product utility and electrical characteristics, utility connection requirements, and location of utility outlets for service for functional equipment and appliances.

F. After review, produce copies and distribute in accordance with SUBMITTAL PROCEDURES article and for record documents described in Section 01700.

1.7 SHOP DRAWINGS

A. Prior to submitting shop drawings, Contractor shall furnish Architect with complete Shop Drawing Submittal Log. No Submittals will be reviewed until a complete Submittal Log has been submitted to Architect.
   1. Contractor shall submit all required shop drawings and product data to the Architect with reasonable promptness and in an orderly sequence so as to cause no delay in the work.
   2. Prepare and submit, with construction schedule, a separate schedule listing dates for submission and lead dates for reviewed shop drawings, product data and samples for each item.
   3. No extension of time shall be allowed because of failure to properly coordinate and sequence submittals.

B. Shop Drawings: Submit to Architect/Engineer for review for limited purpose of checking for conformance with information given and design concept expressed in Contract Documents.

C. Shop Drawings: Prepare Project-specific information, drawn accurately to scale. Do not base Shop Drawings on reproductions of the Contract Documents or standard printed data.
   1. Preparation: Fully illustrate requirements in the Contract Documents. Include the following information, as applicable:
      a. Dimensions
      b. Identification of products
      c. Fabrication and installation drawings
      d. Roughing-in and setting diagrams
      e. Wiring diagrams showing field-installed wiring, including power, signal, and control wiring

f. Shopwork manufacturing instructions
g. Templates and patterns
h. Schedules
i. Design calculations
j. Compliance with specified standards
k. Notation of coordination requirements
l. Notation of dimensions established by field measurement
m. Relationship to adjoining construction clearly indicated
n. Seal and signature of professional engineer if specified
o. Wiring Diagrams: Differentiate between Manufacturer-installed and field-installed wiring

2. Sheet Size: Except for templates, patterns, and similar full-size drawings, submit Shop Drawings on sheets at least 8-1/2 by 11 inches but no larger than 22 by 24 inches.
3. Number of Copies: Submit five opaque copies of each submittal, unless copies are required for operation and maintenance manuals. Architect will retain two copies; remainder will be returned. Mark up and retain one returned copy as a Project Record Drawing

D. Indicate special utility and electrical characteristics, utility connection requirements, and location of utility outlets for service for functional equipment and appliances.

E. All work must ultimately comply with the contract documents unless Architect/Engineer gives specific written acceptance of specific deviations.

F. After review, produce copies and distribute in accordance with SUBMITTAL PROCEDURES article and for record documents described in Section 01700.

1.8 SAMPLES

A. Samples: Submit to Architect/Engineer for review for limited purpose of checking for conformance with information given and design concept expressed in Contract Documents.

B. Samples For Initial Selection as Specified in Product Sections:
1. Submit to Architect/Engineer for aesthetic, color, or finish selection.
2. Submit samples of finishes from full range of Manufacturers' standard colors, textures, and patterns for Architect/Engineer selection.

C. Submit samples to illustrate functional and aesthetic characteristics of Products, with integral parts and attachment devices. Coordinate sample submittals for interfacing work.

D. Include identification on each sample, with full Project information.

E. Submit number of samples specified in individual specification sections; Architect/Engineer will retain two samples.
1. Architect will retain two Sample sets; remainder will be returned. Mark up and retain one returned Sample set as a Project Record Sample.
2. Retain one sample on construction site for field comparison as needed.

F. Samples will not be used for testing purposes unless specifically stated in specification section.

G. After review, produce duplicates and distribute in accordance with SUBMITTAL PROCEDURES article and for record documents purposes described in Section 01700.

1.9 DESIGN DATA

A. Submit for Architect/Engineer's knowledge as contract administrator or for Owner.

B. Submit for information for limited purpose of assessing conformance with information given and design concept expressed in Contract Documents.

1.10 TEST REPORTS

A. Submit for Architect/Engineer's knowledge as contract administrator or for Owner.

B. Submit test reports for information for limited purpose of assessing conformance with information given and design concept expressed in Contract Documents.

1.11 CERTIFICATES

A. When specified in individual specification sections, submit certification by Manufacturer, installation/application Subcontractor, or Contractor to Architect/Engineer, in quantities specified for Product Data.

B. Indicate material or product conforms to or exceeds specified requirements. Submit supporting reference data, affidavits, and certifications as appropriate.

C. Certificates may be recent or previous test results on material or Product, but must be acceptable to Architect/Engineer.

1.12 MANUFACTURER'S INSTRUCTIONS

A. When specified in individual specification sections, submit printed instructions for delivery, storage, assembly, installation, start-up, adjusting, and finishing, to Architect/Engineer for delivery to Owner in quantities specified for Product Data.

B. Indicate special procedures, perimeter conditions requiring special attention, and special environmental criteria required for application or installation.

1.13 MANUFACTURER'S FIELD REPORTS

A. Submit reports for Architect/Engineer's benefit as contract administrator or for Owner.

B. Submit report within 10 days of observation to Architect/Engineer for information.

C. Submit for information for limited purpose of assessing conformance with information given and design concept expressed in Contract Documents.

1.14 ERECTION DRAWINGS

A. Submit drawings for Architect/Engineer's benefit as contract administrator or for Owner.

B. Submit for information for limited purpose of assessing conformance with information given and design concept expressed in Contract Documents.

C. Data indicating inappropriate or unacceptable Work may be subject to action by Architect/Engineer or Owner.

1.15 CONSTRUCTION PHOTOGRAPHS

A. Provide photographs of site and construction throughout progress of Work produced by photographer, acceptable to Architect/Engineer.

B. Each month submit photographs with Application for Payment.

C. Photographs: One print prints; color, glossy; 4 x 6 inch size; mounted on soft card stock, with left edge binding margin for three hole punch.

D. Take two site photographs from differing directions and six interior photographs indicating relative progress of the Work, 3 days maximum prior to submitting.

E. Identify each print on front. Identify name of Project, contract number orientation of view, date and time of view.

F. Deliver negatives or electronic data to Owner with project record documents. Catalog and index negatives in chronological sequence; include typed table of contents.

1.16 PROJECT WARRANTY AND MAINTENANCE MANUAL:

A. Prior to final payment, the Contractor shall furnish two complete sets, in tabbed standard size ring binders, of equipment data, maintenance information, operations instructions, and warranties for equipment and systems provided under this contract. See Section 01700 for detailed requirements.

B. Provide warranties as specified. Warranties shall not limit length of time for remedy of damages Owner may have by legal statute. Contractor, Supplier, or Installer responsible for performance of warranty shall sign warranties.

C. Material Safety Data Sheets (MSDSs): Submit information directly to Owner; do not submit to Architect, except as required in "Action Submittals" Article.
   1. Architect will not review submittals that include MSDSs and will return the entire submittal for resubmittal.

PART 2 - PRODUCTS (Not Used)

PART 3 - EXECUTION

3.1 CONTRACTOR'S REVIEW

A. Review each submittal and check for coordination with other Work of the Contract and for compliance with the Contract Documents. Note corrections and field dimensions. Mark with approval stamp before submitting to Architect.

B. Approval Stamp: Stamp each submittal with a uniform, approval stamp. Include Project name and location, submittal number, Specification Section title and number, name of reviewer, date of Contractor's approval, and statement certifying that submittal has been reviewed, checked, and approved for compliance with the Contract Documents.

PART 4 - ARCHITECT'S/ACTION

4.1 General: Architect will not review submittals that do not bear Contractor's approval stamp and will return them without action.

A. Action Submittals: Architect will review each submittal, make marks to indicate corrections or modifications required, and return it. Architect will stamp each submittal with an action stamp and will mark stamp appropriately to indicate action taken.

B. Informational Submittals: Architect will review each submittal and will not return it, or will return it if it does not comply with requirements. Architect will forward each submittal to appropriate party.

C. Partial submittals are not acceptable, will be considered nonresponsive, and will be returned without review.

D. Submittals not required by the Contract Documents may not be reviewed and may be discarded.

END OF SECTION

MNT DIVISION/FACILITIES MANAGEMENT
150 E. RIVERSIDE DRIVE
AUSTIN, TEXAS 78704
512/416-3048

SUBMITTAL SCHEDULE

SECTION NUMBER	DESCRIPTION	Color Charts	Certified Test Reports	Design Data	Inspection Reports	Installer / Subcontractor Qualifications	Manufacturer's Qualifications	Manufacturer's Installation Instructions	Manufacturer's Material Certificates	Mock Ups	Notes	Operations and Maintenance Manuals	Product Data	Product Warranty	Project Record Documents	Samples	Schedule	Shop Drawings	Submittal Number	Date Received Submittal	Date Submitted to A/E	Date Due A/E	Date A/E Returned
DIVISION 1	**GENERAL REQUIREMENTS**																						
	This Submittal Schedule does not include submittals required in Division 1. Contractor must provide all submittals required therein.																						
DIVISION 2	**SITE WORK**																						
02100	Site Clearing																						
02200	Earthwork															X							
02210	Geotechnical Data																						
02224	Trenching										1												
02362	Termite Control					X							X	X									
02446	Boring and Jacking Conduits			X		X					2							X					
02512	Site Water Distribution												X		X								
02516	Disinfection of Water Distribution		X								3		X										
02538	Sanitary Sewer System												X		X								
02741	Hot Mix Asphalt Paving / Striping		X						X		4		X										
02751	Cement Concrete		X								5												
02764	Pavement Joint Sealants		X						X				X										
02780	Detectable Warning Pavers							X					X			X		X					
02811	Landscape Irrigation																						
02831	Chain Link Fences and Gates					X						X	X		X	X		X					
DIVISION 3	**CONCRETE**																						
03100	Concrete Forms and Accessories			X									X					X					
03200	Concrete Reinforcement					X			X									X					
03300	Cast-In-Place Concrete			X				X	X				X		X			X					
03350	Concrete Finishing					X						X	X										
DIVISION 4	**MASONRY**																						
04065	Masonry Mortar and Grout		X	X				X	X							X							
04210	Stone Masonry									X			X			X							
04600	Cast Stone															X		X					
04820	Reinforced Unit Masonry Assemblies	X		X		X			X				X			X		X					
DIVISION 5	**METALS**																						
05312	Steel Roof Deck					X		X	X				X					X					
05400	Cold-Formed Metal Framing					X		X	X	X			X					X					
05500	Metal Fabrication					X							X					X					
DIVISION 6	**WOOD AND PLASTIC**																						
06114	Wood Blocking and Curbing								X				X										
06200	Finish Carpentry					X	X			X			X			X		X					
06410	Custom Cabinets					X	X		X	X			X			X		X					

SECTION NUMBER	DESCRIPTION	Color Charts	Certified Test Reports	Design Data	Inspection Reports	Installer / Subcontractor Qualifications	Manufacturer's Qualifications	Manufacturer's Installation Instructions	Manufacturer's Material Certificates	Mock Ups	Notes	Operations and Maintenance Manuals	Product Data	Product Warranty	Project Record Documents	Samples	Schedule	Shop Drawings	Submittal Number	Date Received Submittal	Date Submitted to A/E	Date Due A/E	Date A/E Returned
DIVISION 7	**THERMAL AND MOISTURE PROTECTION**																						
07190	Water Repellents							X	X				X	X									
07212	Roof Board Insulation							X	X				X										
07213	Batt Insulation								X				X										
07260	Vapor Retardant Barrier							X		X			X										
07413	Sheet Metal Roof/Wall Panels	X		X				X	X		6		X	X	X			X					
07614	Prefabricated Metal Building Roof Curbs																						
07840	Firestopping					X		X	X	X	7		X				X	X					
07900	Joint Sealers	X	X					X	X	X			X	X		X							
DIVISION 8	**DOORS AND WINDOWS**																						
08110	Standard Steel Doors		X			X		X	X				X			X		X					
08115	Standard Steel Frames		X			X		X	X				X			X		X					
08212	Flush Wood Doors							X					X	X		X		X					
08310	Access Doors and Panels							X					X		X	X		X					
08333	Overhead Coiling Doors					X		X				X	X	X		X		X					
08410	Aluminum Storefronts			X		X			X				X	X		X		X					
08520	Aluminum Windows					X	X		X			X	X	X		X		X					
08710	Door Hardware							X			8	X	X	X	X	X	X						
08800	Glazing		X			X			X				X	X		X							
DIVISION 9	**FINISHES**																						
09111	Non-Load-Bearing Metal Framing System							X		X			X					X					
09260	Gypsum Board Assemblies					X		X		X			X			X		X					
09300	Tile					X			X	X		X	X			X		X					
09510	Acoustical Ceilings		X			X				X		X	X			X		X					
09546	Linear Metal Ceilings								X				X	X		X		X					
09650	Resilient Flooring					X			X			X	X			X							
09900	Paints and Coatings							X		X		X	X	X		X							
09910	Painting Fueling System							X					X			X							
DIVISION 10	**SPECIALTIES**																						
10100	Visual Display Boards											X	X	X		X		X					
10170	Plastic Toilet Compartments							X	X			X	X			X		X					
10200	Louvers and Vents		X						X				X	X				X					
10350	Flagpoles											X	X			X		X					
10440	Interior Signage							X								X		X					
10500	Lockers							X				X	X	X		X		X					
10523	Fire Extinguishers & Cabinets							X	X			X	X					X					
10800	Toilet Accessories							X				X	X	X			X						
DIVISION 11	**EQUIPMENT**																						
11132	Projection Screens							X	X			X	X					X					
11140	Fuel Dispensing System		X								9		X					X					
DIVISION 12	**FURNISHINGS**																						
12493	Horizontal Louver Blinds							X		X			X			X		X					
DIVISION 13	**SPECIAL CONSTRUCTION**																						
13120	Pre-Engineered Buildings		X			X	X		X		6, 10		X	X	X	X		X					
DIVISION 14	**CONVEYING SYSTEMS**																						
	Not Used																						

SECTION NUMBER	DESCRIPTION	Color Charts	Certified Test Reports	Design Data	Inspection Reports	Installer / Subcontractor Qualifications	Manufacturer's Qualifications	Manufacturer's Installation Instructions	Manufacturer's Material Certificates	Mock Ups	Notes	Operations and Maintenance Manuals	Product Data	Product Warranty	Project Record Documents	Samples	Schedule	Shop Drawings	Submittal Number	Date Received Submittal	Date Submitted to A/E	Date Due A/E	Date A/E Returned
DIVISION 15	**MECHANICAL**																						
15050	Basic Mechanical Requirements																						
15060	Supports and Anchors																						
15090	Piping Insulation							X					X										
15097	Ductwork Insulation							X					X										
15210	Reciprocating Air Compressors		X									X	X										
15400	Plumbing, Piping, and Assoc. Materials												X										
15490	Closed Loop Water Recycling System												X	X									
15540	Fuel Fired Heaters												X	X									
15761	Ductless Air Conditioning Systems					X		X					X	X									
15767	Heat Pump Air Conditioning Systems							X					X	X									
15810	Ductwork															X		X					
15820	Ductwork Accessories											X	X					X					
15830	Fans							X				X	X										
15850	Air Outlets and Inlets							X					X				X						
15950	Testing, Adjusting, and Balancing										11												
DIVISION 16	**ELECTRICAL**																						
16010	Basic Electrical Requirements																						
16011	Electrical Submittal & Closeout Docs		X					X	X		12, 13, 14	X	X		X			X					
16060	Grounding and Bonding		X										X		X								
16070	Electrical Hangers and Supports							X	X				X					X					
16075	Electrical Identification							X					X										
16123	Building Wire and Cable												X										
16130	Raceway and Boxes							X					X										
16140	Electrical Wiring Devices												X										
16150	Wiring Connections							X					X										
16210	Electrical Utility Services																						
16235	Engine Generators		X								13	X	X	X				X					
16411	Enclosed Switches												X										
16442	Panelboards											X	X		X			X					
16491	Fuses												X		X								
16510	Interior Luminaires												X					X					
16520	Exterior Luminaires												X										
16530	Emergency Lighting												X										
16710	Telecommunication Equip. & Cabling										12		X	X	X								
16722	Gas Monitoring System							X					X										
	NOTES																						

1 - Excavation Protection Plan

2 - Installation Plan, Traffic Control Plan, Emergency Response Procedures

3 - Disinfection Report, Bacteriological Report

4 - Job-Mix Designs

5 - Design Mixes

6 - Certified Engineer's Report

7 - Engineering Judgements

8 - Keys

9 - Authorized Service Representative Information

10 - Surveys

11 - TAB Supervisor's Biographical Data, TAB Report

12 - Proposed Test Procedures, Proposed Labeling and Cable Identification Scheme, Proposed Firestopping System Plans

13 - Manufacturer's Field Reports

14 - Closeout Submittals

SECTION 01400

QUALITY CONTROL REQUIREMENTS

PART 1 - GENERAL

1.1 SECTION INCLUDES

A. Quality control and control of installation

B. Tolerances

C. References

D. Mock-up requirements

E. Testing and inspection services

F. Manufacturers' field services

G. Examination

H. Preparation

1.2 QUALITY CONTROL AND CONTROL OF INSTALLATION

A. Monitor quality control over Suppliers, Manufacturers, products, services, site conditions, and workmanship, to produce Work of specified quality.

B. Comply fully with Manufacturers' instructions, including each step in sequence and secure Manufacturer's certification as certified installer, when applicable.

C. When Manufacturers' instructions conflict with Contract Documents, request clarification from Architect/Engineer before proceeding.

D. Minimum Quantity or Quality Levels: The quantity or quality level shown or specified shall be the minimum provided or performed. The actual installation may comply exactly with the minimum quantity or quality specified, or it may exceed the minimum within reasonable limits. To comply with these requirements, indicated numeric values are minimum or maximum, as appropriate, for the context of requirements. Refer uncertainties to Architect for a decision before proceeding.

E. Comply with specified standards as minimum quality for the Work except where more stringent tolerances, codes, or specified requirements indicate higher standards or more precise workmanship.

F. Perform Work by persons qualified to produce required and specified quality. The Contractor shall comply with applicable local, state, and federal codes and regulations.
   1. Installer Qualifications: A firm or individual experienced in installing, erecting, or assembling work similar in material, design, and extent to that indicated for

this Project, whose work has resulted in construction with a record of successful in-service performance.

2. Manufacturer Qualifications: A firm experienced in manufacturing products or systems similar to those indicated for this Project and with a record of successful in-service performance, as well as sufficient production capacity to produce required units.
3. Fabricator Qualifications: A firm experienced in producing products similar to those indicated for this Project and with a record of successful in-service performance, as well as sufficient production capacity to produce required units.
4. Professional Engineer Qualifications: A professional engineer who is legally qualified to practice in jurisdiction where Project is located and who is experienced in providing engineering services of the kind indicated. Engineering services are defined as those performed for installations of the system, assembly, or product that are similar to those indicated for this Project in material, design, and extent.
5. Testing Agency Qualifications: An NRTL, an NVLAP, or an independent agency with the experience and capability to conduct testing and inspecting indicated, as documented according to ASTM E 548; and with additional qualifications specified in individual Sections; and where required by authorities having jurisdiction, that is acceptable to authorities.
6. NRTL: A nationally recognized testing laboratory according to 29 CFR 1910.7.
7. NVLAP: A testing agency accredited according to NIST's National Voluntary Laboratory Accreditation Program.
8. Factory-Authorized Service Representative Qualifications: An authorized representative of Manufacturer who is trained and approved by Manufacturer to inspect installation of Manufacturer's products that are similar in material, design, and extent to those indicated for this Project.

G. Verify field measurements are as indicated on Shop Drawings or as instructed by Manufacturer.

H. Secure products in place with positive anchorage devices designed and sized to withstand stresses, vibration, physical distortion, or disfigurement.

I. Associated Services: Cooperate with agencies performing required tests, inspections, and similar quality-control services, and provide reasonable auxiliary services as requested. Notify agency sufficiently in advance of operations to permit assignment of personnel. Provide the following:
   1. Access to the Work
   2. Incidental labor and facilities necessary to facilitate tests and inspections
   3. Adequate quantities of representative samples of materials that require testing and inspecting. Assist agency in obtaining samples
   4. Facilities for storage and field curing of test samples
   5. Delivery of samples to testing agencies
   6. Preliminary design mix proposed for use for material mixes that require control by testing agency
   7. Security and protection for samples and for testing and inspecting equipment at Project site

J. Coordination: Coordinate sequence of activities to accommodate required quality-assurance and -control services with a minimum of delay and to avoid necessity of removing and replacing construction to accommodate testing and inspecting.
   1. Schedule times for tests, inspections, obtaining samples, and similar activities.

1.3 TOLERANCES

A. Monitor fabrication and installation tolerance control of products to produce acceptable Work. Do not permit tolerances to accumulate.

B. Comply with Manufacturers' tolerances. When Manufacturers' tolerances conflict with Contract Documents, request clarification from Architect/Engineer before proceeding.

C. Adjust products to appropriate dimensions; position before securing products in place.

1.4 REFERENCES

A. For products or workmanship specified by association, trade, or other consensus standards, comply with requirements of standard, except when more rigid requirements are specified or are required by applicable codes.

B. Conform to reference standard by date of issue current on date for receiving bids, except where specific date is established by code.

C. Obtain copies of standards where required by product specification sections.

D. When specified reference standards conflict with Contract Documents, request clarification from Architect/Engineer before proceeding.

E. Neither contractual relationships, duties, nor responsibilities of parties in Contract nor those of Architect/Engineer shall be altered from Contract Documents by mention or inference otherwise in reference documents.

1.5 MOCK-UP REQUIREMENTS

A. Mockups: Before installing portions of the Work requiring mockups, build mockups for each form of construction and finish required to comply with the following requirements, using materials indicated for the completed Work:
   1. Build mockups in location and of size indicated or, if not indicated, as directed by Architect.
   2. Notify Architect 14 days in advance of dates and times when mockups will be constructed.
   3. Demonstrate the proposed range of aesthetic effects and workmanship.
   4. Obtain Architect's approval of mockups before starting work, fabrication, or construction.
   5. Allow seven days for initial review and each re-review of each mockup.

B. Assemble and erect specified items with specified attachment and anchorage devices, flashings, seals, and finishes.

C. Maintain mockups during construction in an undisturbed condition as a standard for judging the completed Work.

D. Where mock-up has been accepted by Architect/Engineer and is specified in product specification sections to be removed; remove mock-up and clear area when directed to do so by Architect/Engineer.

E. Demolish and remove mockups when directed, unless otherwise indicated.

1.6 TESTING AND INSPECTION SERVICES

A. Refer to Specifications Section 01410 – Testing Laboratory Services.

B. Employ and pay for services of an independent testing agency or laboratory acceptable to Owner to perform specified testing.
   1. Prior to start of Work, submit testing laboratory name, address, and telephone number, and names of full time specialist and responsible officer.
   2. Submit copy of report of laboratory facilities inspection made by Materials Reference Laboratory of National Bureau of Standards during most recent inspection, with memorandum of remedies of deficiencies reported by inspection.

C. The independent firm will perform tests, inspections and other services specified in individual specification sections and as required by Architect/Engineer and / or Owner.
   1. Laboratory: Authorized to operate at Project location.
   2. Laboratory Staff: Maintain full time registered Engineer on staff to review services.
   3. Testing Equipment: Calibrated at reasonable intervals with devices of an accuracy traceable to National Bureau of Standards or accepted values of natural physical constants.

D. Testing, inspections and source quality control may occur on or off project site. Perform off-site testing as required by Architect/Engineer or Owner.

E. The work will be observed by the Architect/Engineer (Owner's Representative) or the Owners field observer and performed to his satisfaction in accordance with the Contract Plans and Specifications. The Owner's representative and Architect/Engineer will decide all questions which may arise as to the quality of acceptability of materials furnished and work performed; the manner of performance and rate of progress of the work; the interpretations of the contract plans and specifications; and the acceptable fulfillment of the contract on the part of the Contractor. The Owner's decisions will be final, and he will have executive authority to enforce and make effective such decisions and orders if the Contractor fails to carry out the work promptly.

F. Reports will be submitted by independent firm to Architect/Engineer, TxDOT Project Manager (2 copies) and Contractor, indicating observations and results of tests and indicating compliance or non-compliance with Contract Documents.

G. Cooperate with independent firm; furnish samples of materials, design mix, equipment, tools, storage, safe access, and assistance by incidental labor as requested.

1. Notify Architect/Engineer and independent firm 48 hours prior to expected time for operations requiring services.
2. Make arrangements with independent firm and pay for additional samples and tests required for Contractor's use.

H. Testing and employment of testing agency or laboratory shall not relieve Contractor of obligation to perform Work in accordance with requirements of Contract Documents.

I. Re-testing or re-inspection required because of non-conformance to specified requirements shall be performed by same independent firm on instructions by Architect/Engineer. Payment for re-testing or re-inspection will be charged to Contractor by deducting testing charges from Contract Sum/Price.

J. Agency Responsibilities:
1. Test samples of mixes submitted by Contractor.
2. Provide qualified personnel at site. Cooperate with Architect/Engineer and Contractor in performance of services.
3. Perform specified sampling and testing of products in accordance with specified standards.
4. Ascertain compliance of materials and mixes with requirements of Contract Documents.
5. Promptly notify Architect/Engineer and Contractor of observed irregularities or non-conformance of Work or products.
6. Perform additional tests required by Architect/Engineer.
7. Attend preconstruction meetings and progress meetings.

K. Agency Reports: After each test, promptly submit two copies of report to Architect/Engineer and to Contractor. When requested by Architect/Engineer, provide interpretation of test results.

L. Limits On Testing Authority:
1. Agency or laboratory may not release, revoke, alter, or enlarge on requirements of Contract Documents.
2. Agency or laboratory may not approve or accept any portion of the Work.
3. Agency or laboratory may not assume duties of Contractor.
4. Agency or laboratory has no authority to stop the Work.

M. Any materials and/or workmanship which are rejected by the Engineer by reason of failure to conform to the requirements of the plans or specifications shall be removed and replaced at Contractor's expense, including testing expense to correct faulty work.

N. Inspections and testing required by law, ordinances, rules and regulations or other public authorities are the responsibility of the Contractor. It is the sole responsibility of the Contractor to call for testing and any work not tested will be automatically rejected

O. Contained in the various specification sections are requirements for certification of products, testing, adjusting, and balancing of equipment and other tests and standards. Testing is required for, but not limited to, the following items of work:

1. Soils-compaction control and hydrocarbon concentrations
2. Cast-in-place concrete
3. Concrete reinforcement
4. Asphalt pavement
5. Cement-Sand Backfill material
6. Crushed limestone base materials
7. Water and sludge
8. Other items in the Scope of Work

1.7 CONTRACTOR'S RESPONSIBILITIES

A. Cooperate with laboratory personnel; provide access to the work area.

B. Provide to laboratory, preliminary representative samples of materials to be tested in required quantities.

C. Furnish labor and equipment:
1. To provide access to the work to be tested.
2. To obtain and handle samples at the site.
3. To facilitate inspections and tests.
4. For laboratory's exclusive use for storage and curing of test samples

1.8 MANUFACTURERS' FIELD SERVICES

A. When specified in individual specification sections, require material or product Suppliers or Manufacturers to provide qualified staff personnel to observe site conditions, conditions of surfaces and installation, quality of workmanship, start-up of equipment, test, adjust and balance of equipment and as applicable, and to initiate instructions when necessary.

B. The Contractor shall provide to the Owner the names of individuals and Manufacturer's representative report of observations and site decisions or instructions given to Applicators or Installers that are supplemental or contrary to Manufacturer's written instructions.

C. Report observations and site decisions or instructions given to Applicators or Installers that are supplemental or contrary to Manufacturers' written instructions.

D. Refer to Section 01330 - SUBMITTAL PROCEDURES, MANUFACTURERS' FIELD REPORTS article.

PART 2 - PRODUCTS (Not Used)

PART 3 - EXECUTION

3.1 EXAMINATION

A. Verify existing site conditions and substrate surfaces are acceptable for subsequent Work. Beginning new Work means acceptance of existing conditions.

B. Verify existing substrate is capable of structural support or attachment of new Work being applied or attached.

C. Examine and verify specific conditions described in individual specification sections.

D. Verify utility services are available, of correct characteristics, and in correct locations.

3.2 PREPARATION

A. Clean substrate surfaces prior to applying next material or substance.

B. Seal cracks or openings of substrate prior to applying next material or substance.

C. Apply Manufacturer required or recommended substrate primer, sealer, or conditioner prior to applying new material or substance in contact or bond.

3.3 TEST AND INSPECTION LOG

A. Prepare a record of tests and inspections. Include the following:
1. Date test or inspection was conducted
2. Description of the Work tested or inspected
3. Date test or inspection results were transmitted to Architect
4. Identification of testing agency or special inspector conducting test or inspection

B. Maintain log at Project site. Post changes and modifications as they occur. Provide access to test and inspection log for Architect's reference during normal working hours.

3.4 REPAIR AND PROTECTION

A. General: On completion of testing, inspecting, sample taking, and similar services, repair damaged construction and restore substrates and finishes.
1. Provide materials and comply with installation requirements specified in other Specification Sections. Restore patched areas and extend restoration into adjoining areas with durable seams that are as invisible as possible.
2. Comply with the Contract Document requirements for Division 1 Section "Cutting and Patching."

B. Protect construction exposed by or for quality-control service activities.

C. Repair and protection are Contractor's responsibility, regardless of the assignment of responsibility for quality-control services.

END OF SECTION

SECTION 01410

TESTING LABORATORY SERVICES

PART 1 - GENERAL

1.1 RELATED DOCUMENTS: Provision established within the General and Supplementary General Conditions of the Contract, Division 1 – General Requirements, and the Drawings are collectively applicable to this Section.

1.2 WORK INCLUDES

A. The testing laboratory shall make all inspections and perform all tests in accordance with the building code, local authorities, state regulations, **TxDOT Test Standards**, and the ASTM specifications and the Contract Documents.

B. Materials and workmanship not meeting the required standards are to be removed and replaced. Replacement and subsequent testing shall be at the expense of the Contractor.

C. Testing, inspection and certifications specified in other sections of these Specifications shall be paid by the Contractor.

D. Inspection by the laboratory shall not relieve the Contractor or Fabricator of his responsibility to furnish materials and workmanship in accordance with the Contract Documents.

1.3 SELECTION AND PAYMENT

A. The General Contractor shall employ and pay for services of an independent testing laboratory, to perform inspection and testing services specified in this section and noted in other specifications sections. The selected independent testing laboratory shall furnish unit or hourly costs for performing work as described in this section. The Owner reserves the right to determine which tests and the quantity of each herein described or elected.

1.4 REFERENCED STANDARDS

A. The latest adopted edition of all standards referenced in the Section shall apply, unless noted otherwise. In case of conflict between these Contract Documents and a referenced standard, the Contract Documents shall govern. In case of conflict between these Contract Documents and the Building Code, the more stringent shall govern.

1.5 QUALITY ASSURANCE

A. Testing Laboratory shall meet the requirements of ASTM E329 and ASTM E543.

B. Testing Laboratory shall be insured against errors and omissions by a professional liability insurance policy having a limit of liability not less than $500,000.

C. Testing Laboratory shall be under the direction of a Registered Engineer licensed in the State of Texas, having at least five years experience in inspection and testing of construction materials.

D. Laboratory staff monitoring concrete work shall be ACI certified inspectors.

E. Laboratory staff performing structural steel inspection shall be currently certified AWS Certified Welding Inspectors (CWI), in accordance with the provisions of AWS QCI, "Standard and Guide for Qualification and Certification of Welding Inspectors". The inspector may be supported by assistant inspectors who may perform specific inspection functions under the supervision of the inspector. Assistant inspectors shall be currently certified AWS Certified Associate Welding Inspectors (CAWI). The work of the assistant inspectors shall be regularly monitored by the inspector, generally on a daily basis.

F. Testing Equipment: Calibrated at reasonable intervals with devices of accuracy traceable to either National Bureau of Standards or accepted values of natural physical constants.

1.6 LABORATORY RESPONSIBILITIES

A. Attend pre-construction meetings and progress meetings when requested, to coordinate work with the Contractor and address quality control issues.

B. Test samples of design mixes submitted by Contractor.

C. Provide qualified personnel at site. Cooperate with Architect/Engineer and Contractor in performance of services.

D. Perform specified inspecting, sampling, and testing of Products in accordance with specified standards.

E. Ascertain compliance of materials and mixes with requirements of Contract Documents.

F. Promptly notify Architect/Engineer and Contractor of observed irregularities or non-conformance of Work or Materials.

G. Perform all inspections and tests in accordance with building code requirements for "Special Inspection" whether or not such inspections are specified in the Contract Documents.

1.7 LABORATORY REPORTS

A. After each inspection and test, promptly submit copies of laboratory reports to Architect, Engineer, Owner and to Contractor.

B. Include:
1. Date issued
2. Project title and number
3. Name of inspector
4. Date and time of sampling or inspection
5. Identification of product and specifications section

6. Location in the Project
7. Type of inspection or test
8. Date of test
9. Results of tests
10. Conformance with Contract Documents

1.8 LIMITS ON TESTING LABORATORY AUTHORITY

A. Laboratory may not release, revoke, alter, or enlarge the requirements of the Contract Documents.

B. Laboratory may not approve or accept any portion of the Work, except where such approval is specifically called for in these specifications.

C. Laboratory may not assume any duties of Contractor.

D. Laboratory has no authority to stop the Work.

1.9 CONTRACTOR RESPONSIBILITIES

A. See technical sections of these specifications for specific requirements.

B. Advise laboratory sufficiently in advance of construction operations to allow laboratory to complete any required checks or tests and to assign personnel for field inspection and testing as specified.

C. Provide facilities for safe storage and proper curing of concrete test samples on project site for the first 24 hours and also for subsequent field curing as required by ASTM specifications C31.

D. Provide incidental labor and equipment as required to assist laboratory personnel in obtaining and handling samples at the site and in accessing work for inspection.

E. Furnish concrete mix designs, in accordance with ACI 301, Section 3.9, made by an independent testing laboratory or qualified concrete supplier. Where mix designs are required, the laboratory shall be selected and paid by the Contractor.

F. Provide current welder certifications for each welder to be employed.

G. Furnish fabrication and erection inspection of all welds in accordance with the AWS D1.1, Chapter 6.

H. Pre-qualification of all welding procedures to be used in executing the work.

PART 2 - PRODUCTS (Not Used)

PART 3 - EXECUTION

3.1 FILLING AND BACKFILLING

A. The Contractor shall make available to the laboratory, adequate samples of each fill and backfill material from the proposed sources of supply not less than 10 days prior to the start of the work.

B. Laboratory shall analyze samples as required to provide a soil description and to determine compliance with quality requirements. Perform the following tests:
   1. Test for liquid limit in accordance with ASTM D423.
   2. Test for plastic limit of soils and plasticity index of soils in accordance with ASTM D424.
   3. Tests for moisture density relations of soil in accordance with ASTM D698 or D1557, as applicable.

C. Furnish a report for each individual test and state whether sample conforms to specified requirements or reasons for nonconformance.

D. Inspect under slab drainage material and placement for compliance with specified gradation, quality and compaction.

E. Make in-place compaction test for moisture content, moisture-density relationship, and density of fill material after compaction to determine that backfill materials have been compacted to the specified density. Number of tests shall be as follows:
   1. One test for each 5,000 square feet of area of each lift placed under floor slab. Stagger test locations in each lift from those in the previous lift. Perform a minimum of three tests for each lift.
   2. One test for each 100 linear feet, or portion thereof, of each lift placed against foundation walls, with locations staggered from those in the previous lift.
   3. One test of each lift placed below any isolated footing, and every 100 linear feet under continuous footings, with locations taken on a different side from that in the lift below.

3.2 CONCRETE REINFORCING STEEL AND EMBEDDED METAL ASSEMBLIES

A. Inspect all concrete reinforcing steel prior to placing of concrete for compliance with the Contract Documents and approved shop drawings. All instances of noncompliance shall be immediately brought to the attention of the Contractor for correction. If uncorrected by the Contractor, they shall be listed in the report.

B. Observe and report on the following:
   1. Number and size of bars
   2. Bending and lengths of bars
   3. Splicing
   4. Clearance to forms including chair heights
   5. Clearance between bars or spacing
   6. Rust, form oil, and other contaminations
   7. Grade of Steel
   8. Securing, tying and chairing of bars

9. Excessive congestion of reinforcing steel
10. Installation of anchor bolts and placement of concrete around anchor bolts
11. Fabrication and installation of embedded metal assemblies, including visual inspection of all welds
12. Visually inspect studs and deformed bar anchors on embedded assemblies for compliance with Contract Documents.

C. Provide a qualified, experienced inspector to inspect reinforcing steel. Inspector shall have a minimum of three years experience inspecting reinforcing steel in project of similar size.

3.3 CONCRETE INSPECTION AND TESTING

A. Secure composite samples of concrete at the jobsite in accordance with ASTM C172.

B. Mold and cure three specimens from each sample in accordance with ASTM C31. The test cylinders shall be stored in the field 24 hours and then carefully transported to the laboratory and cured in accordance with ASTM C31.

C. Test specimens in accordance with ASTM C39. Two specimens shall be tested at 28 days for acceptance and one shall be tested at 7 days for information.

D. Make one strength test (three cylinders or beams) for each 75 cubic yards or fraction thereof, of each mix design placed in one day.

E. Make one slump test for each set of cylinders following the procedural requirements of ASTM C143 and ASTM C172. Make additional slump tests whenever the consistency of the concrete appears to vary. Do not permit placement of concrete having measured slump outside the limits given on the drawings, except when approved by the Architect. Slump tests corresponding to samples from which strength tests are made shall be reported with the strength test results. Other slump tests need not be reported.

F. Determine total air content of air entrained normal-weight concrete sample for each strength test in accordance with ASTM C231.

G. Determine temperature of concrete sample for each strength test.

H. Monitor the addition of water at the jobsite and the length of time the concrete is allowed to remain in the truck before placement. Report any significant deviation from the approved mix design to the Architect, the Contractor, and the concrete supplier.

I. Observe the placing of all concrete, except non structural slabs-on-grade and site work. Observe and report on placing method, consolidation, cold joints, and length of drop and displacement of reinforcing. Report deficiencies to the Contractor immediately for corrective action. Inspections may be reduced to a periodic basis when all procedures have been deemed satisfactory by the laboratory.

J. The testing laboratory shall certify each delivery ticket indicating class of concrete delivered (or placed), amount of water added and the time at which the cement and

aggregate was dispensed into the truck, and the time at which concrete was discharged from the truck.

K. Evaluation and Acceptance:
1. If the measured slump or air content of air entrained concrete falls outside the specified limits, a check test shall be made immediately on another portion of the same sample. In the event of a second failure, the concrete shall be considered to have failed to meet the requirements of the specifications and shall be rejected.
2. The strength level of the concrete will be considered satisfactory if the averages of all sets of three consecutive strength test results are equal to or exceed the specified strength and no individual test result (average of two cylinders) is below the specified strength by more than 500 psi.
3. Completed concrete work will be accepted when the requirements of "Specifications for Structural Concrete for Building," ACI 301, Chapter 18 have been met.

L. Comply with ACI 311, "Guide For Concrete Inspection" and "ACI Manual of Concrete Inspection" (SP-2).

M. Inspect the application of curing compound and monitor all curing conditions to assure compliance with Specification requirements. Report curing deficiencies to the Contractor immediately and submit a report to the Architect.

3.4 MASONRY

A. Compressive Test for Mortar:
1. Secure composite samples of mortar at the jobsite in accordance with ASTM C780.
2. Mold and cure three cube specimens in accordance with ASTM C109 and C780. Supervise the curing and protection provided by the Contractor for test specimens in the field and the transportation from the field to the laboratory. The specimens shall be stored in the field 24 hours and then be moved to the laboratory and cured in accordance with ASTM C780.
3. Test specimens in accordance with ASTM C780. Two specimens shall be tested at 28 days for acceptance and one shall be tested at 7 days for information.
4. Make one strength test (three cubes) for each 2,000 square feet of wall area.

3.5 STRUCTURAL STEEL

A. Inspect all structural steel during fabrication and during the after erection for conformance with Contract Documents and shop drawings, as requested by the Owner.

B. Shop Inspection:
1. Examination of steel for straightness and alignment
2. Examination of all fabricated pieces for compliance with Contract Documents and shop drawings
3. Visual examination of all shop welding
4. Ultrasonic testing of all full penetration welds
5. Examination of galvanizing
6. Examination of installation of shop welded shear studs

7. Examination of shop painting

C. Field Inspection:
1. Proper erection of all pieces
2. Proper installation of all bolts, including the checking of calibration of impact wrenches used with high strength bolts
3. Plumbness of structure and proper bracing
4. Field Painting
5. Visual examination of all field welding
6. Ultrasonic testing of all penetration welds
7. Installation of field welded shear studs

D. Qualification of Welders: Fabricator and erector shall provide the testing laboratory with names of welders to be employed in the work, together with certification that welders have passed qualification tests within the last year using procedures specified in the AWS D1.1. The Owner shall verify all welders' qualifications.

E. Inspection of shop and field welding shall be "verification inspection", in accordance with Section 6 of AWS D1.1 on an "as needed" basis, and as follows:
1. Visually inspect the welding of all shop fabricated members and note the location of all cover plates, connectors, bearing stiffeners, splices, and fillet welds for proper return around ends and check for seams, folds, and delaminations.
2. Ultrasonically test all penetration welds in accordance with ASTM E164.
3. Inspect surfaces to be welded. Surface preparations, fit-up and cleanliness of surface shall be noted.
4. The welding inspector shall be present during alignment and fit-up of members being welded, and shall check for correct surface preparation of root openings, sound weld metal and proper penetration in the root pass. Where weld has not penetrated completely, the inspector shall order the joint to be chipped down to sound metal, or gouged out and rewelded. Root passes shall be thoroughly inspected for cracks. All cracks shall be gouged out and rewelded to two inches beyond each end of crack.
5. The inspector shall check that all welds have been marked with the welders' symbol. The inspector shall make the welds requiring repairs and shall make a reinspection. The inspector shall maintain a written record of all welds. Work completed and inspected shall receive an identification mark by the inspector.
6. The testing laboratory shall advise the Owner and the Architect of any shop and/or field conditions which, in his opinion, may require further tests and examination by means other than those specified. Such further tests and examinations shall be performed as authorized by the Owner and the Architect.
7. The Owner reserves the right to use ultrasonic or radiographic inspection to verify the adequacy of all welds. Testing procedures and acceptance criteria shall be as specified in AWS D1.1.

F. Inspection of bolted construction shall be in accordance with AISC "Specification for Structural Steel Buildings" and as follows:
1. All bolts shall be visually inspected to endure that the plies have been brought into snug contact.
2. High strength bolting shall be inspected in accordance with Section 9 of the AISC "Specifications for Structural Joints Using ASTM A325 or A490 Bolts."

3. For all high strength bolts, unless specifically noted on the Drawings to require only “snug-tight” installation, the inspector shall observe the required jobsite testing and calibration, and shall confirm that the procedure to be used provides the required tension.

3.6 METAL ROOF DECK

A. Field inspection shall consist of the following:
   1. Checking types, gauges, and finishes for conformance with the Contract Documents and shop drawings
   2. Examination for proper erection of all metal deck, including fastenings at supports and sidelaps, reinforcing of holes, and miscellaneous deck supports
   3. Certification of all welders
   4. Visual inspection of at least 25% of all welds

END OF SECTION

SECTION 01420

REFERENCES

PART 1 - GENERAL

1.1 RELATED DOCUMENTS

A. Drawings and general provisions of the Contract, including General and Supplementary Conditions and other Division 1 Specification Sections, apply to this Section.

1.2 DEFINITIONS

A. General: Basic Contract definitions are included in the Conditions of the Contract.

B. "Reviewed": When used to convey Architect's action on Contractor's submittals, applications, and requests, "Reviewed" is limited to Architect's duties and responsibilities as stated in the Conditions of the Contract.

C. "Directed": A command or instruction by Architect. Other terms including "requested," "authorized," "selected," "required," and "permitted" have the same meaning as "directed."

D. "Indicated": Requirements expressed by graphic representations or in written form on Drawings, in Specifications, and in other Contract Documents. Other terms including "shown," "noted," "scheduled," and "specified" have the same meaning as "indicated."

E. "Regulations": Laws, ordinances, statutes, and lawful orders issued by authorities having jurisdiction, and rules, conventions, and agreements within the construction industry that control performance of the Work.

F. "Furnish": Supply and deliver to Project site, ready for unloading, unpacking, assembly, installation, and similar operations.

G. "Install": Operations at Project site including unloading, temporarily storing, unpacking, assembling, erecting, placing, anchoring, applying, working to dimension, finishing, curing, protecting, cleaning, and similar operations.

H. "Provide": Furnish and install, complete and ready for the intended use.

I. "Project Site": Space available for performing construction activities. The extent of Project site is shown on Drawings and may or may not be identical with the description of the land on which Project is to be built.

1.3 INDUSTRY STANDARDS

A. Applicability of Standards: Unless the Contract Documents include more stringent requirements, applicable construction industry standards have the same force and effect as if bound or copied directly into the Contract Documents to the extent referenced. Such standards are made a part of the Contract Documents by reference.

B. Publication Dates: Comply with standards in effect as of date of the Contract Documents, unless otherwise indicated.

1.4 ABBREVIATIONS AND ACRONYMS

A. Industry Organizations: Where abbreviations and acronyms are used in Specifications or other Contract Documents, they shall mean the recognized name of the entities indicated in Gale Research's "Encyclopedia of Associations" or in Columbia Books' "National Trade & Professional Associations of the U.S."

B. Code Agencies: Where abbreviations and acronyms are used in Specifications or other Contract Documents, they shall mean the recognized name of the entities in the following list. Names, telephone numbers, and Web-site addresses are subject to change and are believed to be accurate and up-to-date as of the date of the Contract Documents.

ICBO	International Conference of Building Officials (See ICC)	
ICBO ES	ICBO Evaluation Service, Inc. (See ICC-ES)	
ICC	International Code Council (Formerly: CABO - Council of American Building Officials) www.iccsafe.org	(703) 931-4533
ICC-ES	ICC Evaluation Service, Inc. www.icc-es.org	(800) 423-6587 (562) 699-0543

C. Federal Government Agencies: Where abbreviations and acronyms are used in Specifications or other Contract Documents, they shall mean the recognized name of the entities in the following list. Names, telephone numbers, and Web-site addresses are subject to change and are believed to be accurate and up-to-date as of the date of the Contract Documents.

CPSC	Consumer Product Safety Commission www.cpsc.gov	(800) 638-2772 (301) 504-6816
DOC	Department of Commerce www.commerce.gov	(202) 482-2000
DOE	Department of Energy www.eren.doe.gov	(202) 586-9220
EPA	Environmental Protection Agency www.epa.gov	(202) 272-0167
FCC	Federal Communications Commission www.fcc.gov	(888) 225-5322

GSA	General Services Administration www.gsa.gov	(800) 488-3111 (202) 501-1888
NCHRP	National Cooperative Highway Research Program (See TRB)	
NIST	National Institute of Standards and Technology www.nist.gov	(301) 975-6478
OSHA	Occupational Safety & Health Administration www.osha.gov	(800) 321-6742 (202) 693-1999
RUS	Rural Utilities Service (See USDA)	(202) 720-9540
TRB	Transportation Research Board www.nas.edu/trb	(202) 334-2934

PART 2 - PRODUCTS (Not Used)

PART 3 - EXECUTION (Not Used)

END OF SECTION

SECTION 01500

TEMPORARY FACILITIES AND CONTROLS

PART 1 - GENERAL

1.1 SECTION INCLUDES

A. Temporary Utilities:
   1. Temporary electricity
   2. Temporary lighting for construction purposes
   3. Temporary heating
   4. Temporary cooling
   5. Temporary ventilation
   6. Telephone service
   7. Facsimile service
   8. Temporary water service
   9. Temporary sanitary facilities

B. Construction Facilities:
   1. Field offices and sheds
   2. Vehicular access
   3. Parking
   4. Progress cleaning and waste removal
   5. Project identification
   6. Traffic regulation

C. Temporary Controls:
   1. Barriers
   2. Enclosures and fencing
   3. Security
   4. Water control
   5. Dust control
   6. Erosion and sediment control
   7. Noise control
   8. Pest control
   9. Pollution control
   10. Rodent control

D. Removal of utilities, facilities, and controls.

1.2 USE CHARGES

A. General: Cost or use charges for temporary facilities shall be included in the Contract Sum. Allow other entities to use temporary services and facilities without cost, including, but not limited to, Architect, testing agencies, and authorities having jurisdiction.

B. Sewer Service: Pay sewer service use charges for sewer usage by all entities for construction operations.

C. Water Service: Pay water service use charges for water used by all entities for construction operations.

D. Electric Power Service: Pay electric power service use charges for electricity used by all entities for construction operations.

1.3 SUBMITTALS

A. Site Plan: Show temporary facilities, utility hookups, staging areas, and parking areas for construction personnel.

1.4 TEMPORARY ELECTRICITY

A. Provide and pay for power service required from utility source as needed for construction operation.
   1. Exercise measures to conserve energy.
   2. Provide and install temporary overhead power from Utility Company.
   3. Set temporary meter and switchgear at start of construction.
   4. Specified switchgear shall not be used to construct building until building is in “dry-in" stage.

B. Provide power outlets, with branch wiring and distribution boxes located as required for construction operations. Provide flexible power cords as required for portable construction tools and equipment.

C. Permanent convenience receptacles may not be utilized during construction.

1.5 TEMPORARY LIGHTING FOR CONSTRUCTION PURPOSES

A. Provide and maintain lighting for construction operations. Provide temporary lighting with local switching that provides adequate illumination for construction operations, observations, inspections, and traffic conditions.

B. Provide and maintain lighting to exterior staging and storage areas after dark for security purposes. Install and operate temporary lighting that fulfills security and protection requirements without operating entire system.

C. Provide branch wiring from power source to distribution boxes with lighting conductors, pigtails, and lamps for specified lighting levels.

D. Maintain lighting and provide routine repairs.

E. Permanent building lighting may be utilized during construction.

1.6 TEMPORARY HEATING

A. Provide and pay for heating devices and heat as needed to maintain specified conditions for construction operations

B. Prior to operation of permanent equipment for temporary heating purposes, verify installation is approved for operation, equipment is lubricated and filters are in place. Provide and pay for operation, maintenance, and regular replacement of filters and worn or consumed parts. Owner must authorize use of permanent system for temporary purposes.

C. Maintain minimum ambient temperature of 50 degrees F in areas where construction is in progress, unless indicated otherwise in product sections.

1.7 TEMPORARY COOLING

A. Provide and pay for cooling devices and cooling as needed to maintain specified conditions for construction operations.

B. Enclose building prior to activating temporary cooling in accordance with Enclosures article in this section.

C. Prior to operation of permanent equipment for temporary cooling purposes, verify installation is approved for operation, equipment is lubricated and filters are in place. Provide and pay for operation, maintenance, and regular replacement of filters and worn or consumed parts. Owner must authorize use of permanent system for temporary purposes.

D. Maintain maximum ambient temperature of 80 degrees F in areas where construction is in progress, unless indicated otherwise in specifications.

1.8 TEMPORARY VENTILATION

A. Ventilate enclosed areas to achieve curing of materials, to dissipate humidity, and to prevent accumulation of dust, fumes, vapors, or gases. Owner must authorize use of permanent system for temporary purposes.

1.9 TELEPHONE SERVICE

A. Provide, maintain, and pay for telephone service to field office at time of project mobilization.

B. Contractor shall provide, maintain, and pay for telephone service for field operations at time of project mobilization. No calls shall be made using Owner's equipment. In the event of a telephone charge to an Owner’s telephone, the Contractor shall be responsible for reimbursing the Owner for long distance charges. Reimbursement shall be made prior to the Owner releasing monies on payment draws.

C. Electronic Communication Service: Provide temporary electronic communication service, including electronic mail, in common-use facilities.

1.10 FACSIMILE SERVICE

A. Provide, maintain and pay for facsimile service and dedicated telephone line to field office at time of project mobilization.

1.11 TEMPORARY WATER SERVICE

A. Provide and pay for suitable quality water service as needed to maintain specified conditions for construction operations.
   1. Exercise measures to conserve energy.

B. Extend branch piping with outlets located so water is available by hoses with threaded connections. Provide temporary pipe insulation to prevent freezing.

1.12 TEMPORARY SANITARY FACILITIES

A. Provide and maintain required facilities and enclosures. Existing facility use is not permitted. Provide facilities at time of project mobilization.

B. Provide temporary toilets, wash facilities, and drinking water for use of construction personnel. Comply with authorities having jurisdiction for type, number, location, operation, and maintenance of fixtures and facilities.

C. At end of construction, return existing facilities used for construction operations to same or better condition as original condition.

1.13 FIELD OFFICES AND SHEDS

A. Office: Weather tight, with lighting, electrical outlets, heating, cooling and ventilating equipment, and equipped with sturdy furniture and drawing display table.

B. Provide space for Project meetings, with table and chairs to accommodate 10 persons.

C. Locate offices and sheds minimum distance of 30 feet from existing and new structures. In the event the Contractor furnishes a field office, the office shall be located as directed by the Owner, within the limits of construction. No use of Owners equipment will be permitted.

D. Construction: Portable or mobile buildings, or buildings constructed with floors raised above ground, securely fixed to foundations with steps and landings at entrance doors.
   1. Construction: Structurally sound, secure, weather tight enclosures for office and storage spaces. Maintain during progress of Work; remove when no longer needed.
   2. Temperature Transmission Resistance of Floors, Walls, and Ceilings: Compatible with occupancy and storage requirements.
   3. Exterior Materials: Weather resistant, finished color acceptable to Owner.

4. Fire Extinguishers: Appropriate type fire extinguisher at each office and each storage area.

E. Storage Areas And Sheds: Size to storage requirements for products of individual Sections, allowing for access and orderly provision for maintenance and for inspection of products to requirements of Section 01600.
   1. Store combustible materials apart from building.

F. Preparation: Fill and grade sites for temporary structures sloped for drainage away from buildings.

G. Installation:
   1. Install office spaces ready for occupancy.
   2. Employee Residential Occupancy: Not allowed on Owner's property.

H. Removal: At completion of Work remove buildings, foundations, utility services, and debris. Restore areas.

1.14 VEHICULAR ACCESS

A. Construct temporary all-weather access roads from public thoroughfares to serve construction area, of width and load bearing capacity to accommodate unimpeded traffic for construction purposes.

B. Construct temporary culverts to span low areas and allow unimpeded drainage.

C. Extend and relocate vehicular access as Work progress requires, provide detours as necessary for unimpeded traffic flow.

D. Location approved by Owner.

E. Provide unimpeded access for emergency vehicles. Maintain 20 feet wide driveways with turning space between and around combustible materials.

F. Provide and maintain access to fire hydrants and control valves free of obstructions.

G. Provide means of removing mud from vehicle wheels before entering streets.

H. Do not use existing on-site roads for construction traffic.

1.15 PARKING

A. Provide temporary surface parking areas to accommodate construction personnel.

B. Locate as approved by Owner.

C. Use of existing on-site streets and driveways used for construction traffic is not permitted. Tracked vehicles not allowed on paved areas.

D. Use of existing parking facilities used by construction personnel is not permitted.

E. Do not allow heavy vehicles or construction equipment in parking areas.

F. Do not allow vehicle parking on existing pavement.

G. Permanent Pavements And Parking Facilities:
1. Prior to Substantial Completion, bases for permanent roads and parking areas may be used for construction traffic.
2. Avoid traffic loading beyond paving design capacity. Tracked vehicles not allowed.

H. Maintenance:
1. Maintain traffic and parking areas in sound condition free of excavated material, construction equipment, products, mud, snow, and ice.
2. Maintain existing paved areas used for construction; promptly repair breaks, potholes, low areas, standing water, and other deficiencies, to maintain paving and drainage in original, or specified, condition.

I. Mud from Site Vehicles: Provide means of removing mud from vehicle wheels before entering streets.

1.16 PROGRESS CLEANING AND WASTE REMOVAL

A. Maintain areas free of waste materials, debris, and rubbish. Maintain site in clean and orderly condition.

B. Remove debris and rubbish from pipe chases, plenums, attics, crawl spaces, and other closed or remote spaces, prior to enclosing spaces.

C. Broom and vacuum clean interior areas prior to start of surface finishing, and continue cleaning to eliminate dust.

D. Waste Disposal Facilities: Provide waste-collection containers in sizes adequate to handle waste from construction operations. Comply with requirements of authorities having jurisdiction. Collect and remove waste materials, debris, and rubbish from site weekly and dispose off-site.
1. Remove waste upon owner representative’s request.

1.17 PROJECT IDENTIFICATION

A. Project Identification Sign:
1. One painted sign, 32 sq ft area, bottom 6 feet above ground
2. Content: Name of Prime Contractor and major Subcontractors
3. Graphic Design, Colors, Style of Lettering: Reviewed by Owner
4. No other signs are allowed without Owner permission except those required by law

B. Design sign and structure to withstand building code wind velocity.

C. Sign Painter: Experienced as professional sign painter.

D. Finishes, Painting: Adequate to withstand weathering, fading, and chipping for duration of construction.

E. Show content, layout, lettering, and color.

F. Sign Materials:
1. Structure and Framing: New wood, structurally adequate
2. Sign Surfaces: Exterior grade plywood
3. Rough Hardware: Galvanized
4. Paint and Primers: Exterior quality

G. Installation:
1. Erect at designated location.
2. Erect supports and framing on secure foundation, rigidly braced and framed to resist wind loadings.
3. Install sign surface plumb and level, with butt joints. Anchor securely.
4. Paint exposed surfaces of sign, supports, and framing.

H. Maintenance: Maintain signs and supports clean, repair deterioration and damage.

I. Removal: Remove signs, framing, supports, and foundations at completion of Project and restore area.

1.18 TRAFFIC REGULATION

A. Signs, Signals, And Devices:
1. Post Mounted and Wall Mounted Traffic Control and Informational Signs
2. Traffic Cones and Drums, Flares and Lights: As approved by authority having jurisdiction
3. Flag person Equipment: As required by authority having jurisdiction

B. Flag Persons: Provide trained and equipped flag persons to regulate traffic when construction operations or traffic encroach on public traffic lanes.

C. Flares and Lights: Use flares and lights during hours of low visibility to delineate traffic lanes and to guide traffic.

D. Haul Routes:
1. Consult with authority having jurisdiction, establish public thoroughfares to be used for haul routes and site access.
2. Confine construction traffic to designated haul routes.

E. Traffic Signs:
1. Provide signs at approaches to site and on site, at crossroads, detours, parking areas, and elsewhere as needed to direct construction and affected public traffic.
2. Relocate as Work progresses, to maintain effective traffic control.

F. Removal:
   1. Remove equipment and devices when no longer required.
   2. Repair damage caused by installation.
   3. Remove post settings.

1.19 BARRIERS

A. Provide barriers to prevent unauthorized entry to construction areas, to allow for Owner's use of site, and to protect existing facilities and adjacent properties from damage from construction operations.

B. Provide barricades required by authorities having jurisdiction for public rights-of-way.

C. Provide protection for plants designated to remain. Replace damaged plants.

D. Protect non-owned vehicular traffic, stored materials, site, and structures from damage.

1.20 ENCLOSURES AND FENCING

A. Construction: Commercial grade chain link fence.

B. Provide 6 feet high fence around construction site; equip with vehicular gates with locks.

1.21 SECURITY

A. Security Program:
   1. Protect Work from theft, vandalism, and unauthorized entry.
   2. Initiate program in coordination with Owner's existing security system at project mobilization.
   3. Maintain program throughout construction period until Owner occupancy.

B. Entry Control:
   1. Restrict entrance of persons and vehicles into Project site.

C. Personnel Identification:
   1. Provide identification badge to each person authorized to enter premises.
   2. Maintain list of accredited persons, submit copy to Owner on request.
   3. Require return of badges at expiration of their employment on the Work.

D. Security Enclosure and Lockup: Install substantial temporary enclosure around partially completed areas of construction. Provide lockable entrances to prevent unauthorized entrance, vandalism, theft, and similar violations of security.

E. Temporary Fire Protection: Install and maintain temporary fire-protection facilities of types needed to protect against reasonably predictable and controllable fire losses. Comply with NFPA 241.
   1. Prohibit smoking in construction areas.

2. Supervise welding operations, combustion-type temporary heating units, and similar sources of fire ignition according to requirements of authorities having jurisdiction.
3. Develop and supervise an overall fire-prevention and -protection program for personnel at Project site. Review needs with local fire department and establish procedures to be followed. Instruct personnel in methods and procedures. Post warnings and information.

F. Restrictions:
1. Do no work on days indicated in Owner-Contractor Agreement.

1.22 WATER CONTROL

A. Grade site to drain. Maintain excavations free of water. Provide, operate, and maintain pumping equipment.

B. Protect site from puddling or running water. Provide water barriers as required to protect site from soil erosion.

1.23 DUST CONTROL

A. Execute Work by methods to minimize raising dust from construction operations.

B. Provide positive means to prevent air-borne dust from dispersing into atmosphere.

1.24 EROSION AND SEDIMENT CONTROL

A. Plan and execute construction by methods to control surface drainage from cuts and fills, from borrow and waste disposal areas. Prevent erosion and sedimentation.

B. Minimize surface area of bare soil exposed at one time.

C. Provide temporary measures including berms, dikes, and drains, and other devices to prevent water flow.

D. Construct fill and waste areas by selective placement to avoid erosive surface silts or clays.

E. Periodically inspect earthwork to detect evidence of erosion and sedimentation; promptly apply corrective measures.

1.25 PEST CONTROL

A. Provide methods, means, and facilities to prevent pests and insects from damaging the Work.

1.26 POLLUTION CONTROL

A. Provide methods, means, and facilities to prevent contamination of soil, water, and atmosphere from discharge of noxious, toxic substances, and pollutants produced by construction operations.

B. Comply with pollution and environmental control requirements of authorities having jurisdiction.

1.27 RODENT CONTROL

A. Provide methods, means, and facilities to prevent rodents from accessing or invading premises.

1.28 REMOVAL OF UTILITIES, FACILITIES, AND CONTROLS

A. Remove temporary utilities, equipment, facilities, materials, prior to Substantial Completion inspection.

B. Remove underground installations, Grade site as indicated on Drawings.

C. Clean and repair damage caused by installation or use of temporary work.

PART 2 - PRODUCTS (Not Used)

PART 3 - EXECUTION

3.1 OPERATION, TERMINATION, AND REMOVAL

A. Supervision: Enforce strict discipline in use of temporary facilities. To minimize waste and abuse, limit availability of temporary facilities to essential and intended uses.

B. Maintenance: Maintain facilities in good operating condition until removal.
1. Maintain operation of temporary enclosures, heating, cooling, humidity control, ventilation, and similar facilities on a 24-hour basis where required to achieve indicated results and to avoid possibility of damage.

C. Temporary Facility Changeover: Do not change over from using temporary security and protection facilities to permanent facilities until Substantial Completion.

D. Termination and Removal: Remove each temporary facility when need for its service has ended, when it has been replaced by authorized use of a permanent facility, or no later than Substantial Completion. Complete or, if necessary, restore permanent construction that may have been delayed because of interference with temporary facility. Repair damaged Work, clean exposed surfaces, and replace construction that cannot be satisfactorily repaired.

1. Materials and facilities that constitute temporary facilities are property of Contractor.
2. Remove temporary paving not intended for or acceptable for integration into permanent paving. Where area is intended for landscape development, remove soil and aggregate fill that do not comply with requirements for fill or subsoil. Remove materials contaminated with road oil, asphalt and other petrochemical compounds, and other substances that might impair growth of plant materials or lawns. Repair or replace street paving, curbs, and sidewalks at temporary entrances, as required by authorities having jurisdiction.
3. At Substantial Completion, clean and renovate permanent facilities used during construction period. Comply with final cleaning requirements specified in Division 1 Section "Closeout Procedures."

END OF SECTION

SECTION 01600

PRODUCT REQUIREMENTS

PART 1 - GENERAL

1.1 RELATED DOCUMENTS

A. Drawings and general provisions of the Contract, including General and Supplementary Conditions and other Division 1 Specification Sections, apply to this Section.

1.2 SUMMARY

A. This Section includes administrative and procedural requirements for selection of products for use in Project; product delivery, storage, and handling; manufacturers' standard warranties on products; special warranties; product substitutions; and comparable products.

B. Related Sections include the following:
1. Division 1 Section "References" for applicable industry standards for products specified
2. Division 1 Section "Closeout Procedures" for submitting warranties for Contract closeout
3. Divisions 2 through 16 Sections for specific requirements for warranties on products and installations specified to be warranted

1.3 DEFINITIONS

A. Products: Items purchased for incorporating into the Work, whether purchased for Project or taken from previously purchased stock. The term "product" includes the terms "material," "equipment," "system," and terms of similar intent.
1. Named Products: Items identified by manufacturer's product name, including make or model number or other designation shown or listed in manufacturer's published product literature that is current as of date of the Contract Documents.
2. New Products: Items that have not previously been incorporated into another project or facility, except that products consisting of recycled-content materials are allowed, unless explicitly stated otherwise. Products salvaged or recycled from other projects are not considered new products.
3. Comparable Product: Product that is demonstrated and approved through submittal process, or where indicated as a product substitution, to have the indicated qualities related to type, function, dimension, in-service performance, physical properties, appearance, and other characteristics that equal or exceed those of specified product.

B. Substitutions: Changes in products, materials, equipment, and methods of construction from those required by the Contract Documents and proposed by Contractor.

C. Basis-of-Design Product Specification: Where a specific manufacturer's product is named and accompanied by the words "basis of design," including make or model number or other designation, to establish the significant qualities related to type, function, di-

mension, in-service performance, physical properties, appearance, and other characteristics for purposes of evaluating comparable products of other named manufacturers.

1.4 SUBMITTALS

A. Substitution Requests: Submit three copies of each request for consideration. Identify product or fabrication or installation method to be replaced. Include Specification Section number and title and Drawing numbers and titles.

1. Substitution Request Form: Use form provided by Owner, reference Section 01630 Substitutions and Product Options.
2. Documentation: Show compliance with requirements for substitutions and the following, as applicable:
    a. Statement indicating why specified material or product cannot be provided
    b. Coordination information, including a list of changes or modifications needed to other parts of the Work and to construction performed by Owner and separate Contractors, that will be necessary to accommodate proposed substitution
    c. Detailed comparison of significant qualities of proposed substitution with those of the Work specified. Significant qualities may include attributes such as performance, weight, size, durability, visual effect, and specific features and requirements indicated
    d. Product Data, including drawings and descriptions of products and fabrication and installation procedures
    e. Samples, where applicable or requested
    f. List of similar installations for completed projects with project names and addresses and names and addresses of architects and owners
    g. Material test reports from a qualified testing agency indicating and interpreting test results for compliance with requirements indicated
    h. Research/evaluation reports evidencing compliance with building code in effect for Project, from a model code organization acceptable to authorities having jurisdiction
    i. Detailed comparison of Contractor's Construction Schedule using proposed substitution with products specified for the Work, including effect on the overall Contract Time. If specified product or method of construction cannot be provided within the Contract Time, include letter from manufacturer, on manufacturer's letterhead, stating lack of availability or delays in delivery
    j. Cost information, including a proposal of change, if any, in the Contract Sum
    k. Contractor's certification that proposed substitution complies with requirements in the Contract Documents and is appropriate for applications indicated
    l. Contractor's waiver of rights to additional payment or time that may subsequently become necessary because of failure of proposed substitution to produce indicated results
3. Architect's Action: If necessary, Architect will request additional information or documentation for evaluation within 7 days of receipt of a request for substitution. Architect will notify Contractor of acceptance or rejection of proposed sub-

stitution within 15 days of receipt of request, or 7 days of receipt of additional information or documentation, whichever is later.
a. Form of Acceptance: Change Order.
b. Use product specified if Architect cannot make a decision on use of a proposed substitution within time allocated.

B. Comparable Product Requests: Submit three copies of each request for consideration. Identify product or fabrication or installation method to be replaced. Include Specification Section number and title and Drawing numbers and titles.
1. Architect's Action: If necessary, Architect will request additional information or documentation for evaluation within one week of receipt of a comparable product request. Architect will notify Contractor of approval or rejection of proposed comparable product request within 15 days of receipt of request, or 7 days of receipt of additional information or documentation, whichever is later.
a. Form of Approval: As specified in Division 1 Section "Submittal Procedures."
b. Use product specified if Architect cannot make a decision on use of a comparable product request within time allocated.

C. Basis-of-Design Product Specification Submittal: Comply with requirements in Division 1 Section "Submittal Procedures." Show compliance with requirements.

1.5 QUALITY ASSURANCE

A. Compatibility of Options: If Contractor is given option of selecting between two or more products for use on Project, product selected shall be compatible with products previously selected, even if previously selected products were also options.

1.6 PRODUCT DELIVERY, STORAGE, AND HANDLING

A. Deliver, store, and handle products using means and methods that will prevent damage, deterioration, and loss, including theft. Comply with manufacturer's written instructions.

B. Delivery and Handling:
1. Schedule delivery to minimize long-term storage at Project site and to prevent overcrowding of construction spaces.
2. Coordinate delivery with installation time to ensure minimum holding time for items that are flammable, hazardous, easily damaged, or sensitive to deterioration, theft, and other losses.
3. Deliver products to Project site in an undamaged condition in manufacturer's original sealed container or other packaging system, complete with labels and instructions for handling, storing, unpacking, protecting, and installing.
4. Inspect products on delivery to ensure compliance with the Contract Documents and to ensure that products are undamaged and properly protected.

C. Storage:
1. Store products to allow for inspection and measurement of quantity or counting of units.
2. Store materials in a manner that will not endanger Project structure.

3. Store products that are subject to damage by the elements, under cover in a weathertight enclosure above ground, with ventilation adequate to prevent condensation.
4. Store cementitious products and materials on elevated platforms.
5. Store foam plastic from exposure to sunlight, except to extent necessary for period of installation and concealment.
6. Comply with product manufacturer's written instructions for temperature, humidity, ventilation, and weather-protection requirements for storage.
7. Protect stored products from damage and liquids from freezing.
8. Provide a secure location and enclosure at Project site for storage of materials and equipment by Owner's construction forces. Coordinate location with Owner.

1.7 PRODUCT WARRANTIES

A. Warranties specified in other Sections shall be in addition to, and run concurrent with, other warranties required by the Contract Documents. Manufacturer's disclaimers and limitations on product warranties do not relieve Contractor of obligations under requirements of the Contract Documents.
   1. Manufacturer's Warranty: Preprinted written warranty published by individual manufacturer for a particular product and specifically endorsed by manufacturer to Owner.
   2. Special Warranty: Written warranty required by or incorporated into the Contract Documents, either to extend time limit provided by manufacturer's warranty or to provide more rights for Owner.

B. Special Warranties: Prepare a written document that contains appropriate terms and identification, ready for execution. Submit a draft for approval before final execution.
   1. Manufacturer's Standard Form: Modified to include Project-specific information and properly executed.
   2. Refer to Divisions 2 through 16 Sections for specific content requirements and particular requirements for submitting special warranties.

C. Submittal Time: Comply with requirements in Division 1 Section "Closeout Procedures."

PART 2 - PRODUCTS

2.1 PRODUCT SELECTION PROCEDURES

A. General Product Requirements: Provide products that comply with the Contract Documents, that are undamaged and, unless otherwise indicated, that are new at time of installation.
   1. Provide products complete with accessories, trim, finish, fasteners, and other items needed for a complete installation and indicated use and effect.
   2. Standard Products: If available, and unless custom products or nonstandard options are specified, provide standard products of types that have been produced and used successfully in similar situations on other projects.
   3. Owner reserves the right to limit selection to products with warranties not in conflict with requirements of the Contract Documents.

4. Where products are accompanied by the term "as selected," Architect will make selection.
5. Where products are accompanied by the term "match sample," sample to be matched is Architect's.
6. Descriptive, performance, and reference standard requirements in the Specifications establish "salient characteristics" of products.
7. Or Equal: Where products are specified by name and accompanied by the term "or equal" or "or approved equal" or "or approved," comply with provisions in Part 2 "Comparable Products" Article to obtain approval for use of an unnamed product.

B. Product Selection Procedures:
1. Products: Where Specifications include a list of names of both products and manufacturers, provide one of the products listed that complies with requirements.
2. Manufacturers: Where Specifications include a list of manufacturers' names, provide a product by one of the manufacturers listed that complies with requirements.
3. Available Products: Where Specifications include a list of names of both products and manufacturers, provide one of the products listed, or an unnamed product, that complies with requirements. Comply with provisions in Part 2 "Comparable Products" Article for consideration of an unnamed product.
4. Available Manufacturers: Where Specifications include a list of manufacturers, provide a product by one of the manufacturers listed, or an unnamed manufacturer, that complies with requirements. Comply with provisions in Part 2 "Comparable Products" Article for consideration of an unnamed product.
5. Product Options: Where Specifications indicate that sizes, profiles, and dimensional requirements on Drawings are based on a specific product or system, provide the specified product or system. Comply with provisions in Part 2 "Product Substitutions" Article for consideration of an unnamed product or system.
6. Basis-of-Design Product: Where Specifications name a product and include a list of manufacturers, provide the specified product or a comparable product by one of the other named manufacturers. Drawings and Specifications indicate sizes, profiles, dimensions, and other characteristics that are based on the product named. Comply with provisions in Part 2 "Comparable Products" Article for consideration of an unnamed product by the other named manufacturers.
7. Visual Matching Specifications: Where Specifications include the phrase “as selected from manufacturer’s colors, patterns, textures” or a similar phrase, select a product (and manufacturer) that complies with other specified requirements.
    a. Standard Range: Where specifications include the phrase “standard range of colors, patterns, textures” or similar phrase, Architect will select color pattern, or texture from manufacturer’s product line that does not include premium items.
    b. Full Range: Where Specifications include the phrase “full range of colors, patterns, textures” or similar phrase, Architect will select color, pattern or texture form manufacturer’s product line that include both standard and premium items.

2.2 PRODUCT SUBSTITUTIONS

A. Reference Section 01630 – Substitutions and Product Options.

2.3 COMPARABLE PRODUCTS

A. Conditions: Architect will consider Contractor's request for comparable product when the following conditions are satisfied. If the following conditions are not satisfied, Architect will return requests without action, except to record noncompliance with these requirements:
   1. Evidence that the proposed product does not require extensive revisions to the Contract Documents, that it is consistent with the Contract Documents and will produce the indicated results, and that it is compatible with other portions of the Work
   2. Detailed comparison of significant qualities of proposed product with those named in the Specifications. Significant qualities include attributes such as performance, weight, size, durability, visual effect, and specific features and requirements indicated
   3. Evidence that proposed product provides specified warranty
   4. List of similar installations for completed projects with project names and addresses and names and addresses of architects and owners, if requested
   5. Samples, if requested

PART 3 - EXECUTION (Not Used)

END OF SECTION

SECTION 01630

SUBSTITUTIONS AND PRODUCT OPTIONS

PART 1 - GENERAL

1.1 PRODUCT LIST

A. Within 30 days after date of Contract, submit to Architect 5 copies of complete list of products and materials which are proposed for installation.

B. Prepare list on basis of each Specification section.

C. For products specified under reference standards, include with listing of each product:
1. Name and address of Manufacturer
2. Trade name
3. Model or catalog designation
4. Manufacturer's data, including performance and test data, reference standards

1.2 CONTRACTOR'S OPTIONS

A. For products specified only by reference standards, select any product meeting standards, by any Manufacturer.

B. For products specified by naming several products or Manufacturers, select any product and Manufacturer named.

C. For products specified by naming only one product and Manufacturer, there is no option, unless a substitution is approved as specified below.

1.3 SUBSTITUTIONS

A. During Bidding, Architect will consider written requests from prime Bidders for substitutions, received at least 7 days prior to Bid Date; requests received after that time will not be considered. Approval of proposed substitutions will be set forth in an Addendum or letter of approval. Requests for substitutions shall include data listed below.

B. Within 30 days after date of Contract, Architect will consider formal requests from Contractor for substitutions of products in place of those specified. No request for substitutions will be considered after this date.

C. Submit 2 copies of request for substitution. Include in substitution:
1. Data substantiating compliance of proposed substitution with Contract documents.
2. For products:
a. Product identification, including Manufacturer’s name and address

b. Manufacturer's literature, including product description, performance and test data and reference standards
c. Samples, if applicable
d. Name and address of similar projects on which product was used and date of installation

3. For construction methods:
   a. Detailed written descriptions of proposed method
   b. Complete drawings illustrating methods or revisions
4. Itemized comparison of proposed substitution with product or method specified.
5. Data relating to changes in construction schedule.

D. In making request for substitution, Bidder/Contractor represents:
1. He has personally investigated proposed product or method and determined that it is equal or superior in all respects to that specified.
2. He will provide same guarantee for substitution as for product or method specified.
3. He will coordinate installation of accepted substitution into work, making such changes as may be required for work to be complete in all respects.
4. He waives all claims for additional costs related to substitution which subsequently becomes apparent.

E. Substitutions will not be considered if:
1. They are indicated or implied on show drawings or product data submittals without formal request as submitted in accordance with Article 1.03 of this Section.
2. Acceptance will require substantial revision of Contract Documents.

PART 2 - PRODUCTS

2.1 PRODUCT SUBSTITUTIONS

A. Timing: Architect will consider requests for substitution if received within 30 days after the Notice to Proceed. Requests received after that time may be considered or rejected at discretion of Architect.

B. Conditions: Architect will consider Contractor's request for substitution when the following conditions are satisfied. If the following conditions are not satisfied, Architect will return requests without action, except to record noncompliance with these requirements:
1. Requested substitution offers Owner a substantial advantage in cost, time, energy conservation, or other considerations, after deducting additional responsibilities Owner must assume. Owner's additional responsibilities may include compensation to Architect for redesign and evaluation services, increased cost of other construction by Owner, and similar considerations.
2. Requested substitution does not require extensive revisions to the Contract Documents.

3. Requested substitution is consistent with the Contract Documents and will produce indicated results.
4. Substitution request is fully documented and properly submitted.
5. Requested substitution will not adversely affect Contractor's Construction Schedule.
6. Requested substitution has received necessary approvals of authorities having jurisdiction.
7. Requested substitution is compatible with other portions of the Work.
8. Requested substitution has been coordinated with other portions of the Work.
9. Requested substitution provides specified warranty.

SUBSTITUTION REQUEST

PROJECT: _____ APW PROJECT NO.: _____

TO: James Tate
MNT Division
150 E. Riverside Dr.
Austin, TX 78704

FROM (CONTRACTOR/BIDDER):
_____
_____

CONTRACTOR (BIDDER) HEREBY REQUESTS ACCEPTANCE OF THE FOLLOWING PRODUCT OR SYSTEMS AS A SUBSTITUTION IN ACCORD WITH PROVISIONS OF DIVISION ONE OF THE SPECIFICATIONS:

1. SPECIFIED PRODUCT OR SYSTEM:
   Substitution request for (Generic Description): _____

   Specification Section No.: _____ Article(s) _____ Paragraph (s) _____

2. SUPPORTING DATA:
   Product data for proposed substitution is attached (description of product, reference standards, performance and test data).

   Sample is attached Sample will be sent if requested

3. QUALITY COMPARISON:

	SPECIFIED PRODUCT	SUBSTITUTION
Name brand:	_____	_____
Catalog No.	_____	_____
Manufacturer:	_____	_____
Vendor:	_____	_____
Significant Variations:	_____	_____
	_____	_____

Maintenance Service Available: _____ Yes _____ No

Spare Part Source: _____

4. PREVIOUS INSTALLATIONS:
   Identification of similar projects on which proposed substitution was used:

   Project: _____ Architect: _____

   Address: _____ Owner: _____

   _____ Date Installed: _____

   _____

5. REASON FOR NOT GIVING PRIORITY TO SPECIFIED ITEMS:

   _____

   _____

6. EFFECT OF SUBSTITUTION:
   Proposed substitution affects other parts of Work: _____ No _____Yes (If yes, explain)

_____

_____

Substitution changes Contract Time: _____ No _____ Yes Add/Deduct _____days.

Substitution requires dimensional revision or redesign of structure or M & E Work:

_____ No _____ Yes (If yes, attach compete data)

Saving or credit to Owner, if any, for accepting substitution: $_____.

Extra cost to Owner, if any, for accepting substitution: $_____.

7. CONTRACTOR'S (BIDDER'S) STATEMENT OF CONFORMANCE OF PROPOSED SUBSTITUTION TO CONTRACT REQUIREMENT:

I/we have investigated the proposed substitution.

I/we:

___ believe that it is equal or superior in all respects to specified product, except as stated above.
___ will provide the same warranty as specified for specified product.
___ have included complete cost data and implications of the substitution.
___ will pay redesign and special inspection costs caused by the use of this product.
___ will pay additional costs to other contractors caused by the substitution.
___ will coordinate the incorporation of the proposed substitution in the Work.
____ will modify other parts of the work as may be needed, to make all parts of the work complete and functioning.
___ waive future claims for added cost to Contract caused by the substitution.

Contractor (Bidder): _____ Date: _____

By: _____.

Answer all questions and complete all blanks - use "N/A" if not applicable.

ARCHITECT REVIEW AND ACTION

___ Resubmit substitution request:

___ Provide more information in following categories.

_____

___ Sign Contractor's (Bidder's) Statement of Conformance.

___ Substitution accepted.

___ Substitution is accepted with the following comments.

_____

_____

___ Substitution not accepted.

___ Substitution Request received too late.

_____ _____
James Tate, R.A. Date
TxDOT

END OF SECTION

SECTION 01700

EXECUTION REQUIREMENTS

PART 1 - GENERAL

1.1 SECTION INCLUDES

A. Installation

B. Owner-Installed Products

C. Progress Cleaning

D. Final cleaning

E. Starting of systems

F. Demonstration and instructions

G. Testing, adjusting and balancing

H. Protecting installed construction

I. Operation and maintenance data

J. Manual for materials and finishes

K. Manual for equipment and systems

L. Spare parts and maintenance products

M. Product warranties and product bonds

1.2 INSTALLATION

A. General: Locate the Work and components of the Work accurately, in correct alignment and elevation, as indicated.
   1. Make vertical work plumb and make horizontal work level.
   2. Where space is limited, install components to maximize space available for maintenance and ease of removal for replacement.
   3. Conceal pipes, ducts, and wiring in finished areas, unless otherwise indicated.
   4. Maintain minimum headroom clearance of 8 feet in spaces without a suspended ceiling.

B. Comply with Manufacturer's written instructions and recommendations for installing products in applications indicated.

C. Install products at the time and under conditions that will ensure the best possible results. Maintain conditions required for product performance until Substantial Completion.

D. Conduct construction operations so no part of the Work is subjected to damaging operations or loading in excess of that expected during normal conditions of occupancy.

E. Tools and Equipment: Do not use tools or equipment that produce harmful noise levels.

F. Templates: Obtain and distribute to the parties involved templates for work specified to be factory prepared and field installed. Check Shop Drawings of other work to confirm that adequate provisions are made for locating and installing products to comply with indicated requirements.

G. Anchors and Fasteners: Provide anchors and fasteners as required to anchor each component securely in place, accurately located and aligned with other portions of the Work.
   1. Mounting Heights: Where mounting heights are not indicated, mount components at heights directed by Architect.
   2. Allow for building movement, including thermal expansion and contraction.
   3. Coordinate installation of anchorages. Furnish setting drawings, templates, and directions for installing anchorages, including sleeves, concrete inserts, anchor bolts, and items with integral anchors, that are to be embedded in concrete or masonry. Deliver such items to Project site in time for installation.

H. Joints: Make joints of uniform width. Where joint locations in exposed work are not indicated, arrange joints for the best visual effect. Fit exposed connections together to form hairline joints.

I. Hazardous Materials: Use products, cleaners, and installation materials that are not considered hazardous.

1.3 OWNER-INSTALLED PRODUCTS

A. Site Access: Provide access to Project site for Owner's construction forces.

B. Coordination: Coordinate construction and operations of the Work with work performed by Owner's construction forces.
   1. Construction Schedule: Inform Owner of Contractor's preferred construction schedule for Owner's portion of the Work. Adjust construction schedule based on a mutually agreeable timetable. Notify Owner if changes to schedule are required due to differences in actual construction progress.
   2. Preinstallation Conferences: Include Owner's construction forces at preinstallation conferences covering portions of the Work that are to receive Owner's work. Attend preinstallation conferences conducted by Owner's construction forces if portions of the Work depend on Owner's construction.

1.4 PROGRESS CLEANING

A. General: Clean Project site and work areas daily, including common areas. Coordinate progress cleaning for joint-use areas where more than one installer has worked. Enforce requirements strictly. Dispose of materials lawfully.
   1. Comply with requirements in NFPA 241 for removal of combustible waste materials and debris.
   2. Do not hold materials more than 7 days during normal weather or 3 days if the temperature is expected to rise above 80 deg F.
   3. Containerize hazardous and unsanitary waste materials separately from other waste. Mark containers appropriately and dispose of legally, according to regulations.

B. Site: Maintain Project site free of waste materials and debris.

C. Work Areas: Clean areas where work is in progress to the level of cleanliness necessary for proper execution of the Work.
   1. Remove liquid spills promptly.
   2. Where dust would impair proper execution of the Work, broom-clean or vacuum the entire work area, as appropriate.

D. Installed Work: Keep installed work clean. Clean installed surfaces according to written instructions of Manufacturer or fabricator of product installed, using only cleaning materials specifically recommended. If specific cleaning materials are not recommended, use cleaning materials that are not hazardous to health or property and that will not damage exposed surfaces.

E. Concealed Spaces: Remove debris from concealed spaces before enclosing the space.

F. Exposed Surfaces in Finished Areas: Clean exposed surfaces and protect as necessary to ensure freedom from damage and deterioration at time of Substantial Completion.

G. Waste Disposal: Burying or burning waste materials on-site will not be permitted. Washing waste materials down sewers or into waterways will not be permitted.

H. During handling and installation, clean and protect construction in progress and adjoining materials already in place. Apply protective covering where required to ensure protection from damage or deterioration at Substantial Completion.

I. Clean and provide maintenance on completed construction as frequently as necessary through the remainder of the construction period. Adjust and lubricate operable components to ensure operability without damaging effects.

J. Limiting Exposures: Supervise construction operations to assure that no part of the construction, completed or in progress, is subject to harmful, dangerous, damaging, or otherwise deleterious exposure during the construction period.

1.5 FINAL CLEANING

A. Execute final cleaning prior to final project assessment.

B. General: Provide final cleaning. Conduct cleaning and waste-removal operations to comply with local laws and ordinances and Federal and local environmental and antipollution regulations.

C. Cleaning: Employ experienced workers or professional cleaners for final cleaning. Clean each surface or unit to condition expected in an average commercial building cleaning and maintenance program. Comply with Manufacturer's written instructions.

1. Complete the following cleaning operations before requesting inspection for certification of Final Completion for entire Project or for a portion of Project:
    a. Clean Project site, yard, and grounds, in areas disturbed by construction activities, including landscape development areas, of rubbish, waste material, litter, and other foreign substances.
    b. Sweep paved areas broom clean. Remove petrochemical spills, stains, and other foreign deposits.
    c. Rake grounds that are neither planted nor paved to a smooth, even-textured surface.
    d. Remove tools, construction equipment, machinery, and surplus material from Project site.
    e. Remove snow and ice to provide safe access to building.
    f. Clean exposed exterior and interior hard-surfaced finishes to a dirt-free condition, free of stains, films, and similar foreign substances. Avoid disturbing natural weathering of exterior surfaces. Restore reflective surfaces to their original condition.
    g. Remove debris and surface dust from limited access spaces, including roofs, plenums, shafts, trenches, equipment vaults, manholes, attics, and similar spaces.
    h. Sweep concrete floors broom clean in unoccupied spaces.
    i. Vacuum carpet and similar soft surfaces, removing debris and excess nap; shampoo if visible soil or stains remain.
    j. Clean transparent materials, including mirrors and glass in doors and windows. Remove glazing compounds and other noticeable, vision-obscuring materials. Replace chipped or broken glass and other damaged transparent materials. Polish mirrors and glass, taking care not to scratch surfaces.
    k. Remove labels that are not permanent.
    l. Touch up and otherwise repair and restore marred, exposed finishes and surfaces. Replace finishes and surfaces that cannot be satisfactorily repaired or restored or that already show evidence of repair or restoration.
        1) Do not paint over "UL" and similar labels, including mechanical and electrical nameplates.
    m. Wipe surfaces of mechanical and electrical equipment and similar equipment. Remove excess lubrication, paint and mortar droppings, and other foreign substances.
    n. Replace parts subject to unusual operating conditions.

o. Clean plumbing fixtures to a sanitary condition, free of stains, including stains resulting from water exposure.
p. Replace disposable air filters and clean permanent air filters. Clean exposed surfaces of diffusers, registers, and grills.
q. Clean ducts, blowers, and coils if units were operated without filters during construction.
r. Clean light fixtures, lamps, globes, and reflectors to function with full efficiency. Replace burned-out bulbs, and those noticeably dimmed by hours of use, and defective and noisy starters in fluorescent and mercury vapor fixtures to comply with requirements for new fixtures.
s. Leave Project clean and ready for occupancy.

D. Comply with safety standards for cleaning. Do not burn waste materials. Do not bury debris or excess materials on Owner's property. Do not discharge volatile, harmful, or dangerous materials into drainage systems. Remove waste materials from Project site and dispose of lawfully.

1.6 STARTING OF SYSTEMS

A. Coordinate schedule for start-up of various equipment and systems.

B. Notify Architect/Engineer and Owner 14 days prior to start-up of each item.

C. Verify each piece of equipment or system has been checked for proper lubrication, drive rotation, belt tension, control sequence, and for conditions which may cause damage.

D. Verify tests, meter readings, and specified electrical characteristics agree with those required by equipment or system Manufacturer.

E. Verify wiring and support components for equipment are complete and tested.

F. Execute start-up under supervision of applicable Manufacturer's representative and Contractors' personnel in accordance with Manufacturers' instructions.

G. Submit a written report in accordance with Section 01300 that equipment or system has been properly installed and is functioning correctly.

1.7 DEMONSTRATION AND INSTRUCTIONS

A. Demonstrate operation and maintenance of products to Owner's personnel two weeks prior to date of Substantial Completion.

B. Demonstrate Project equipment and instructed by qualified representative who is knowledgeable about the Project.

C. For equipment or systems requiring seasonal operation, perform demonstration for other season within six months.

D. Utilize operation and maintenance manuals as basis for instruction. Review contents of manual with Owner's personnel in detail to explain all aspects of operation and maintenance.

E. Demonstrate start-up, operation, control, adjustment, trouble-shooting, servicing, maintenance, and shutdown of each item of equipment at agreed time, at equipment location.

F. Prepare and insert additional data in operations and maintenance manuals when need for additional data becomes apparent during instruction.

G. Required instruction time for each item of equipment and system is specified in individual sections.

1.8 TESTING, ADJUSTING AND BALANCING

A. Refer to Mechanical and Electrical Specifications for specific requirements.
   1. Reports will be submitted by independent firm to Architect/Engineer indicating observations and results of tests and indicating compliance or non-compliance with requirements of Contract Documents.

B. Adjust Door Hardware for proper operation and ADA compliance.

C. Refer to Division 1 through Division 16 for specific requirements.

1.9 PROTECTING INSTALLED CONSTRUCTION

A. Comply with Manufacturer's written instructions for temperature and relative humidity.

B. Protect installed Work and provide special protection where specified in individual specification sections.

C. Provide temporary and removable protection for installed products. Control activity in immediate work area to prevent damage.

D. Provide protective coverings at walls, projections, jambs, sills, and soffits of openings.

E. Protect finished floors, stairs, and other surfaces from traffic, dirt, wear, damage, or movement of heavy objects, by protecting with durable sheet materials.

F. Prohibit traffic or storage upon waterproofed or roofed surfaces. When traffic or activity is necessary, obtain recommendations for protection from waterproofing or roofing material Manufacturer.

G. Prohibit traffic from landscaped areas.

1.10 PROJECT RECORD DOCUMENTS

A. Maintain on site one set of the following record documents; record actual revisions to the Work:
   1. Drawings
   2. Specifications
   3. Addenda
   4. Change Orders and other modifications to the Contract
   5. Reviewed Shop Drawings, Product Data, and Samples
   6. Manufacturer's instruction for assembly, installation, and adjusting
   7. Manufacturer's certificates
   8. Reviewed submittals

B. Ensure entries are complete and accurate, enabling future reference by Owner.

C. Store record documents separate from documents used for construction.

D. Label and file Record Documents in accordance with Section number listings in Table of Contents of this Project Specifications Manual. Label each document "PROJECT RECORD" in neat, large, printed letters.

E. Record information concurrent with construction progress, not less than weekly.

F. Specifications: Legibly mark and record at each product section description of actual products installed, including the following: Provide felt tip marking pens, maintaining separate colors for each major system, for recording information.
   1. Manufacturer's name and product model and number
   2. Product substitutions or alternates utilized
   3. Changes made by Addenda and modifications

G. Record Drawings and Shop Drawings: Legibly mark each item to record actual construction including:
   1. Measured depths of foundations in relation to finish floor datum
   2. Measured horizontal and vertical locations of underground utilities and appurtenances, referenced to permanent surface improvements
   3. Measured locations of internal utilities and appurtenances concealed in construction, referenced to visible and accessible features of the Work
   4. Field changes of dimension and detail
   5. Details not on original Contract drawings
   6. Changes made by Addenda and modifications
   7. Details not on original Contract Drawings
   8. References to related shop drawings and Modifications

H. Submit documents to Architect/Engineer with claim for final Application for Payment.
   1. At Contract closeout, deliver to Owner:
      a. Two copies of:
         1) Record drawings
         2) Record specifications manual

I. Transmit with cover letter in duplicate, listing:
   1. Date
   2. Project title and number
   3. Contractor's name, address, and telephone number
   4. Number and title of each Record Document
   5. Signature of Contractor or authorized representative

1.11 OPERATION AND MAINTENANCE DATA

A. Submit documents to Architect/Engineer with claim for final Application for Payment.
   1. At Contract closeout, deliver to Owner:
      a. Two copies of:
         1) Operations and maintenance manuals for all mechanical equipment
         2) All warranties
         3) Reviewed submittals bound together in 3-ring notebooks

B. Submit data bound in 8-1/2 x 11 inch text pages, three D side ring binders with durable plastic covers.

C. Prepare binder cover with printed title "OPERATION AND MAINTENANCE INSTRUCTIONS", title of project, and subject matter of binder when multiple binders are required.

D. Internally subdivide binder contents with permanent page dividers, logically organized as described below; with tab titling clearly printed under reinforced laminated plastic tabs.

E. Drawings: Provide with reinforced punched binder tab. Bind in with text; fold larger drawings to size of text pages.

F. Contents: Prepare Table of Contents for each volume, with each product or system description identified, typed on white paper, in three parts as follows:
   1. Part 1: Directory, listing names, addresses, and telephone numbers of Architect/Engineer, Contractor, Subcontractors, and major equipment Suppliers.
   2. Part 2: Operation and maintenance instructions, arranged by system and subdivided by specification section. For each category, identify names, addresses, and telephone numbers of Subcontractors and Suppliers. Identify the following:
      a. Significant design criteria
      b. List of equipment
      c. Parts list for each component
      d. Operating instructions
      e. Maintenance instructions for equipment and systems
      f. Maintenance instructions for special finishes, including recommended cleaning methods and materials, and special precautions identifying detrimental agents
   3. Part 3: Project documents and certificates, including the following:
      a. Shop drawings and product data
      b. Air and water balance reports

c. Certificates
d. Originals of warranties and bonds

1.12 MANUAL FOR MATERIALS AND FINISHES

A. Submit two copies of preliminary draft or proposed formats and outlines of contents before start of Work. Architect/Engineer will review draft and return one copy with comments.

B. For equipment, or component parts of equipment put into service during construction and operated by Owner, submit documents within ten days after acceptance.

C. Submit one copy of completed volumes 15 days prior to final inspection. Draft copy be reviewed and returned, with Architect/Engineer comments. Revise content of document sets as required prior to final submission.

D. Submit two sets of revised final volumes in final form within 10 days after final inspection.

E. Building Products, Applied Materials, and Finishes: Include product data, with catalog number, size, composition, and color and texture designations. Include information for re-ordering custom manufactured products.

F. Instructions for Care and Maintenance: Include Manufacturer's recommendations for cleaning agents and methods, precautions against detrimental agents and methods, and recommended schedule for cleaning and maintenance.

G. Moisture Protection and Weather Exposed Products: Include product data listing applicable reference standards, chemical composition, and details of installation. Include recommendations for inspections, maintenance, and repair.

H. Additional Requirements: As specified in individual product specification sections.

I. Include listing in Table of Contents for design data, with tabbed fly sheet and space for insertion of data.

1.13 MANUAL FOR EQUIPMENT AND SYSTEMS

A. Submit two copies of preliminary draft or proposed formats and outlines of contents before start of Work. Architect/Engineer will review draft and return one copy with comments.

B. For equipment, or component parts of equipment put into service during construction and operated by Owner, submit documents within ten days after acceptance.

C. Submit one copy of completed volumes 15 days prior to final inspection. Draft copy be reviewed and returned after final inspection, with Architect/Engineer comments. Revise content of document sets as required prior to final submission.

D. Submit two sets of revised final volumes in final form within 10 days after final inspection.

E. Each Item of Equipment and Each System: Include description of unit or system, and component parts. Identify function, normal operating characteristics, and limiting conditions. Include performance curves, with engineering data and tests, and complete nomenclature and model number of replaceable parts.

F. Panelboard Circuit Directories: Provide electrical service characteristics, controls, and communications; typed.

G. Include color coded wiring diagrams as installed.

H. Operating Procedures: Include start-up, break-in, and routine normal operating instructions and sequences. Include regulation, control, stopping, shut-down, and emergency instructions. Include summer, winter, and special operating instructions.

I. Maintenance Requirements: Include routine procedures and guide for preventative maintenance and trouble shooting; disassembly, repair, and reassembly instructions; and alignment, adjusting, balancing, and checking instructions.

J. Include servicing and lubrication schedule, and list of lubricants required.

K. Include Manufacturer's printed operation and maintenance instructions.

L. Include sequence of operation by controls Manufacturer.

M. Include original Manufacturer's parts list, illustrations, assembly drawings, and diagrams required for maintenance.

N. Include control diagrams by controls Manufacturer as installed.

O. Include Contractor's coordination drawings, with color coded piping diagrams as installed.

P. Include charts of valve tag numbers, with location and function of each valve, keyed to flow and control diagrams.

Q. Include list of original Manufacturer's spare parts, current prices, and recommended quantities to be maintained in storage.

R. Include test and balancing reports as specified in Section 01400.

S. Additional Requirements: As specified in individual product specification sections.

T. Include listing in Table of Contents for design data, with tabbed dividers and space for insertion of data.

1.14 SPARE PARTS AND MAINTENANCE PRODUCTS

A. Furnish spare parts, maintenance, and extra products in quantities specified in individual specification sections.

B. Deliver to Project site and place in location as directed by Owner; obtain receipt prior to final payment.

1.15 PRODUCT WARRANTIES AND PRODUCT BONDS

A. Obtain warranties and bonds executed in duplicate by responsible Subcontractors, Suppliers, and Manufacturers, within ten days after completion of applicable item of work.

B. Execute and assemble transferable warranty documents and bonds from Subcontractors, Suppliers, and Manufacturers.

C. Verify documents are in proper form, contain full information, and are notarized.

D. Co-execute submittals when required.

E. Include Table of Contents and assemble in three D side ring binder with durable plastic cover.

F. Submit prior to final Application for Payment.

G. Time Of Submittals:
1. For equipment or component parts of equipment put into service during construction with Owner's permission, submit documents within ten days after acceptance.
2. Make other submittals within ten days after Date of Substantial Completion, prior to final Application for Payment.
3. For items of Work for which acceptance is delayed beyond Date of Substantial Completion, submit within ten days after acceptance, listing date of acceptance as beginning of warranty or bond period.

PART 2 - PRODUCTS

2.1 CLEANING AGENTS

A. Use cleaning materials and agents recommended by Manufacturer or fabricator of the surface to be cleaned. Do not use cleaning agents that are potentially hazardous to health or property or that might damage finished surfaces.

PART 3 - EXECUTION (Not Used)

END OF SECTION

SECTION 01710

PROJECT CLOSEOUT

PART 1 - GENERAL

1.1 SECTION INCLUDES

A. Closeout procedures

B. Final cleaning

C. Starting of systems

D. Demonstration and instructions

E. Testing, adjusting and balancing

F. Protecting installed construction

1.2 SUBSTANTIAL COMPLETION: Substantial Completion is defined as essentially 99.9% complete with only cosmetic touch-ups left to be done.

A. Documents required for Substantial Completion:
1. Project record documents
2. Operation and maintenance data
3. Manual for materials and finishes
4. Manual for equipment and systems
5. Spare parts and maintenance products
6. Product warranties and product bonds
7. Maintenance service

B. Submit written certification that Contract Documents have been reviewed, Work has been inspected, and that Work is complete in accordance with Contract Documents and ready for Architect/Engineer's review.

C. Provide submittals to Architect/Engineer required by authorities having jurisdiction.

1.3 FINAL CLEANING

A. Execute final cleaning prior at Substantial Completion.

B. Clean interior and exterior glass, surfaces exposed to view; remove temporary labels, stains and foreign substances, polish transparent and glossy surfaces, vacuum carpeted and soft surfaces.

C. Clean equipment and fixtures to sanitary condition with cleaning materials appropriate to surface and material being cleaned.

D. Replace filters of operating equipment.

E. Clean debris from roofs, gutters, downspouts, and drainage systems.

F. Clean site; sweep paved areas, rake clean landscaped surfaces.

G. Remove waste and surplus materials, rubbish, and construction facilities from site.

1.4 STARTING OF SYSTEMS

A. Coordinate schedule for start-up of various equipment and systems.

B. Notify Architect/Engineer seven days prior to start-up of each item.

C. Verify each piece of equipment or system has been checked for proper lubrication, drive rotation, belt tension, control sequence, and for conditions which may cause damage.

D. Verify tests, meter readings, and specified electrical characteristics agree with those required by equipment or system Manufacturer.

E. Verify wiring and support components for equipment are complete and tested.

F. Execute start-up under supervision of applicable Manufacturer's representative and Contractors' personnel in accordance with Manufacturers' instructions.

G. When specified in individual specification Sections, require Manufacturer to provide authorized representative to be present at site to inspect, check, and approve equipment or system installation prior to start-up, and to supervise placing equipment or system in operation.

H. Submit a written report in accordance with Section 01330 that equipment or system has been properly installed and is functioning correctly.

1.5 DEMONSTRATION AND INSTRUCTIONS

A. Demonstrate operation and maintenance of products using a video recording device for future reference to Owner's personnel two weeks prior to date of Substantial Completion.

B. Demonstrate Project equipment and instruct in classroom environment using a video recording device for future reference located at the site and instructed by qualified Manufacturer's representative who is knowledgeable about the Project.

C. For equipment or systems requiring seasonal operation, perform demonstration for other season within six months.

D. Utilize operation and maintenance manuals as basis for instruction. Review contents of manual with Owner's personnel in detail to explain all aspects of operation and maintenance.

E. Demonstrate start-up, operation, control, adjustment, trouble-shooting, servicing, maintenance, and shutdown of each item of equipment at agreed time at equipment designated location.

F. Prepare and insert additional data in operations and maintenance manuals when need for additional data becomes apparent during instruction.

G. Required instruction time for each item of equipment and system is specified in individual sections.

1.6 TESTING, ADJUSTING AND BALANCING

A. Independent firm will perform services specified in Division 15 and other Sections.

B. Reports will be submitted by independent firm to Architect/Engineer indicating observations and results of tests and indicating compliance or non-compliance with requirements of Contract Documents.

1.7 PROTECTING INSTALLED CONSTRUCTION

A. Protect installed Work and provide special protection where specified in individual specification sections.

B. Provide temporary and removable protection for installed products. Control activity in immediate work area to prevent damage.

C. Provide protective coverings at walls, projections, jambs, sills, and soffits of openings.

D. Protect finished floors, stairs, and other surfaces from traffic, dirt, wear, damage, or movement of heavy objects, by protecting with durable sheet materials.

E. Prohibit traffic or storage upon waterproofed or roofed surfaces. When traffic or activity is necessary, obtain recommendations for protection from waterproofing or roofing material Manufacturer.

F. Prohibit traffic from landscaped areas.

1.8 PROJECT RECORD DOCUMENTS

A. Maintain on site one set of the following record documents; record actual revisions to the Work:
   1. Drawings
   2. Specifications
   3. Addenda
   4. Change Orders and other modifications to the Contract
   5. Reviewed Shop Drawings, Product Data, and Samples
   6. Manufacturer's instruction for assembly, installation, and adjusting

B. Ensure entries are complete and accurate, enabling future reference by Owner.

C. Store record documents separate from documents used for construction.

D. Record information concurrent with construction progress, not less than weekly.

E. Specifications: Legibly mark and record at each product section description of actual products installed, including the following:
   1. Manufacturer's name and product model and number
   2. Product substitutions or alternates utilized
   3. Changes made by Addenda and modifications

F. Record Drawings: Legibly mark each item to record actual construction including:
   1. Measured depths of foundations in relation to finish main floor datum
   2. Measured horizontal and vertical locations of underground utilities and appurtenances, referenced to permanent surface improvements
   3. Measured locations of internal utilities and appurtenances concealed in construction, referenced to visible and accessible features of the Work
   4. Field changes of dimension and detail
   5. Details not on original Contract drawings

G. Submit documents to Architect/Engineer.

1.9 OPERATION AND MAINTENANCE DATA

A. Submit **three copies** of data bound in 8-1/2 x 11 inch (A4) text pages, three D side ring capacity expansion binders with durable plastic covers at Substantial Completion.

B. Prepare binder cover with printed title "OPERATION AND MAINTENANCE INSTRUCTIONS", title of project, and subject matter of binder when multiple binders are required.

C. Internally subdivide binder contents with permanent page dividers, logically organized as described below; with tab titling clearly printed under reinforced laminated plastic tabs.

D. Drawings: Provide with reinforced punched binder tab. Bind in with text; fold larger drawings to size of text pages.

E. Contents: Prepare Table of Contents for each volume, with each product or system description identified, typed on white paper, in three parts as follows:
   1. Part 1: Directory, listing names, addresses, and telephone numbers of Architect/Engineer, Contractor, Subcontractors, and major equipment Suppliers.
   2. Part 2: Operation and maintenance instructions, arranged by system and subdivided by specification section. For each category, identify names, addresses, and telephone numbers of Subcontractors and Suppliers. Identify the following:
      a. Significant design criteria
      b. List of equipment
      c. Parts list for each component
      d. Operating instructions
      e. Maintenance instructions for equipment and systems

f. Maintenance instructions for special finishes, including recommended cleaning methods and materials, and special precautions identifying detrimental agents

3. Part 3: Project documents and certificates, including the following:
   a. Shop drawings and product data
   b. Air and water balance reports
   c. Certificates
   d. Originals of warranties and bonds

1.10 MANUAL FOR MATERIALS AND FINISHES

A. Submit two copies of preliminary draft or proposed formats and outlines of contents before start of Work. Architect/Engineer will review draft and return one copy with comments.

B. Building Products, Applied Materials, and Finishes: Include product data, with catalog number, size, composition, and color and texture designations. Include information for re-ordering custom manufactured products.

C. Instructions for Care and Maintenance: Include Manufacturer's recommendations for cleaning agents and methods, precautions against detrimental agents and methods, and recommended schedule for cleaning and maintenance.

D. Moisture Protection and Weather Exposed Products: Include product data listing applicable reference standards, chemical composition, and details of installation. Include recommendations for inspections, maintenance, and repair.

E. Additional Requirements: As specified in individual product specification sections.

F. Include listing in Table of Contents for design data, with tabbed fly sheet and space for insertion of data.

1.11 MANUAL FOR EQUIPMENT AND SYSTEMS

A. Submit two copies of preliminary draft or proposed formats and outlines of contents before start of Work. Architect/Engineer will review draft and return one copy with comments.

B. For equipment, or component parts of equipment put into service during construction and operated by Owner, submit documents within ten days after acceptance of equipment by Owner.

C. Each Item of Equipment and Each System: Include description of unit or system, and component parts. Identify function, normal operating characteristics, and limiting conditions. Include performance curves, with engineering data and tests, and complete nomenclature and model number of replaceable parts.

D. Operating Procedures: Include start-up, break-in, and routine normal operating instructions and sequences. Include regulation, control, stopping, shut-down, and emergency instructions. Include summer, winter, and special operating instructions.

E. Additional Requirements: As specified in individual product specification sections.

F. Include listing in Table of Contents for design data, with tabbed dividers and space for insertion of data.

1.12 SPARE PARTS AND MAINTENANCE PRODUCTS

A. Furnish spare parts, maintenance, and extra products in quantities specified in individual specification sections.

B. Deliver to Owner at Substantial Completion.

1.13 PRODUCT WARRANTIES AND PRODUCT BONDS

A. Obtain warranties and bonds executed in duplicate by responsible Subcontractors, Suppliers, and Manufacturers, at Substantial Completion.

B. Execute and assemble transferable warranty documents and bonds from Subcontractors, Suppliers, and Manufacturers.

C. Verify documents are in proper form, contain full information, and are notarized.

D. Co-execute submittals when required.

E. Include Table of Contents and assemble in three D side ring binder with durable plastic cover. Three copies required.

F. Submit at Substantial Completion.

G. Time of Submittals:
1. For equipment or component parts of equipment put into service during construction with Owner's permission, submit documents within ten days after Owner acceptance.
2. Other submittals at Substantial Completion.

1.14 MAINTENANCE SERVICE

A. Furnish service and maintenance of components indicated in specification sections for one year from date of Substantial Completion.

B. Examine system components at frequency consistent with reliable operation. Clean, adjust, and lubricate as required.

C. Include systematic examination, adjustment, and lubrication of components. Repair or replace parts whenever required. Use parts produced by Manufacturer of original component.

D. Do not assign or transfer maintenance service to agent or Subcontractor without prior written consent of Owner and Engineer.

PART 2 - PRODUCTS (Not Used)

PART 3 - EXECUTION (Not Used)

END OF SECTION

SECTION 02100

SITE CLEARING

PART 1 - GENERAL

1.1 RELATED DOCUMENTS

A. Drawings and general provisions of the Contract, including General and Supplementary Conditions and Division 1 Specification Sections, apply to this Section.

1.2 SUMMARY ITEM 100. Preparing Right Of Way

A. The Contractor shall not begin any clearing operations before the resident Engineer has established and defined the trees and areas of vegetation that shall not be removed or disturbed by construction activities.

Prior to preparing Right of Way, those existing trees, shrubs or other landscape features designated by the Engineer for preservation and pruning as indicated on the "Roadside Planting" sheets and/or as directed by the Engineer shall be protected to the satisfaction of the Engineer. This protection work shall be considered subsidiary to this Item.

B. This Section includes the following:
1. Protecting existing trees and vegetation to remain
2. Removing trees and other vegetation
3. Clearing and grubbing
4. Topsoil stripping

C. C. Related Sections include the following:
1. Division 1 Section "Construction Facilities and Temporary Controls" for temporary utilities, temporary construction and support facilities, temporary security and protection facilities, and environmental protection measures during site operations
2. Division 2 Section "Earthwork" for soil materials, excavating, backfilling, and site grading

1.3 DEFINITIONS

A. Topsoil: Natural or cultivated surface-soil layer containing organic matter and sand, silt, and clay particles; friable, pervious, and black or a darker shade of brown, gray, or red than underlying subsoil; reasonably free of subsoil, clay lumps, gravel, and other objects more than 2 inches (50 mm) in diameter; and free of weeds, roots, and other deleterious materials.

1.4 MATERIALS OWNERSHIP

A. Except for materials indicated to be stockpiled or to remain Owner's property, cleared materials shall become Contractor's property and shall be removed from the site.

1.5 SUBMITTALS (None Required)

1.6 PROJECT CONDITIONS

A. Traffic: Minimize interference with adjoining roads, streets, walks, and other adjacent occupied or used facilities during site-clearing operations.

B. Do not close or obstruct streets, walks, or other adjacent occupied or used facilities without permission from Owner and authorities having jurisdiction.
   1. Provide alternate routes around closed or obstructed traffic ways if required by authorities having jurisdiction.

B. Improvements on Adjoining Property: Authority for performing indicated removal and alteration work on property adjoining Owner's property will be obtained by Owner before award of Contract.

C. Notify utility locator service for area where Project is located before site clearing.

PART 2 - PRODUCTS

Acceptable fencing material for tree protection shall be "Fence It Plus", 46"h x 150', new orange color, as manufactured by
Weathashade
3000 W. Orange Ave.
Apopka, Florida, 32703
(407) 889-3692
or approved equal. Approximately __ trees have been designated for preservation. All trees to be preserved are not necessarily shown on the plans.

PART 3 - EXECUTION

3.1 PREPARATION

A. Protect and maintain benchmarks and survey control points from disturbance during construction.

B. Provide erosion-control measures to prevent soil erosion and discharge of soil-bearing water runoff or airborne dust to adjacent properties and walkways.

C. Locate and clearly flag trees and vegetation to remain or to be relocated.

D. Protect existing site improvements to remain from damage during construction.
   1. Restore damaged improvements to their original condition, as acceptable to Owner.

3.2 TREE PROTECTION

A. Erect and maintain a temporary fence around drip line of individual trees or around perimeter drip line of groups of trees to remain. Remove fence when construction is complete.

B. Do not store construction materials, debris, or excavated material within drip line of remaining trees.
   1. Do not permit vehicles, equipment, or foot traffic within drip line of remaining trees.

C. Do not excavate within drip line of trees, unless otherwise indicated.

D. Repair or replace trees and vegetation indicated to remain that are damaged by construction operations, in a manner approved by Architect.
   1. Employ a qualified arborist, licensed in jurisdiction where Project is located, to submit details of proposed repairs and to repair damage to trees and shrubs.
   2. Replace trees that cannot be repaired and restored to full-growth status, as determined by the qualified arborist.

E. Protect existing trees in the following manner:
   1. Install protective measures to protect tree trunk and root zones as shown in the plans.
      a. Install a protective fence around the perimeter of the drip line.
      b. Strap boards around tree trunks.
      c. Cover ground area below canopies with 3 to 4 inches of coarse, shredded or chipped mulch.
   2. Do not allow vehicles, equipment, stockpiled materials, trash containers, portable toilets, temporary structures, or storage under tree canopies.
   3. Do not operate or clean machinery, tools, or equipment under tree canopies.
   4. Do not discard any paints, solvents, fuels, chemicals, or other contaminated substances that might cause injury to the root systems.
   5. Do not dig or trench below tree canopies.

3.3 CLEARING AND GRUBBING

A. Remove obstructions, trees, shrubs, grass, and other vegetation to permit installation of new construction. Removal includes digging out stumps and obstructions and grubbing roots.

B. Do not remove trees, shrubs, and other vegetation indicated to remain or to be relocated.
   1. Cut minor roots and branches of trees indicated to remain in a clean and careful manner where such roots and branches obstruct installation of new construction.
   2. Completely remove stumps, roots, obstructions, and debris extending to a depth of 18 inches (450 mm) below exposed subgrade.
   3. Use only hand methods for grubbing within drip line of remaining trees.

C. Fill depressions caused by clearing and grubbing operations with satisfactory soil material, unless further excavation or earthwork is indicated.

1. Place fill material in horizontal layers not exceeding 8-inch (200-mm) loose depth, and compact each layer to a density equal to adjacent original ground.

3.4 TOPSOIL STRIPPING

A. Remove sod and grass before stripping topsoil.

B. Strip topsoil to whatever depths are encountered in a manner to prevent intermingling with underlying subsoil or other waste materials.
   1. Strip surface soil of unsuitable topsoil, including trash, debris, weeds, roots, and other waste materials.

C. Stockpile topsoil materials away from edge of excavations without intermixing with subsoil. Grade and shape stockpiles to drain surface water. Cover to prevent windblown dust.
   1. Limit height of topsoil stockpiles to 72 inches (1800 mm).
   2. Do not stockpile topsoil within drip line of remaining trees.
   3. Stockpile surplus topsoil and allow for re-spreading deeper topsoil.
   4. Topsoil will be re-spread on site at direction of Engineer.

3.5 DISPOSAL

A. Disposal: Remove surplus soil material, unsuitable topsoil, obstructions, demolished materials, and waste materials, including trash and debris, and legally dispose of them off Owner's property.

END OF SECTION

SECTION 02200

EARTHWORK

PART 1 - GENERAL

1.1 SCOPE: Provide complete earthwork including general excavation and excavation for structure; footing excavation; rough grading; fill and backfill and finish grading.

1.2 SAMPLES: Submit samples of materials as required below. Samples of earth materials shall be delivered to job site in sufficient quantity necessary for testing laboratory to adequately investigate soil.

1.3 BASIS FOR BIDS: Materials at site are expected to be in accordance with materials indicated on logs and test holes included. Bids shall be based on excavating and filling with materials encountered at site except where special fill or backfill materials are specified herein or indicated on Drawings. No allowance or extra payments will be made by reason of variation in types of soil encountered or variations in their moisture contents. Additional fill material required shall be furnished and included as a part of the work. Removal of excess or objectionable materials shall be included as a part of the work.

1.4 COORDINATION: Coordinate excavation work with other trades for proper scheduling of work.

PART 2 - PRODUCTS

2.1 STOCKPILING: Material cut from building areas which is suitable for backfilling may be stored on site to be distributed later. Fill material required to be hauled in may be stockpiled at site until used, provided it is properly handled to prevent contamination with undesirable materials. Location of stockpiles shall be subject to approval of Architect. Stockpile topsoil separate from excavated sub-soil.

2.2 SURPLUS MATERIALS: Excavated materials not to be used in fills and backfills on this project shall be removed from site immediately. Materials containing rubbish, debris or rocks shall be removed.

2.3 MATERIALS

A. General Fill: Suitable existing excavated on-site dark brown clay soil free from vegetable matter, debris and other deleterious matter, unless otherwise noted

B. Select Fill: Beneath building shall consist of an inactive inert material having a maximum plasticity index (PI) of 4-15. Submit samples for approval, complete with lab analysis of fill if requested by Architect.

C. Top Soil: Clean natural top soil free of vegetation, debris and other deleterious matter. Upper 6" of topsoil stripped may be used.

D. Backfill: Suitable existing excavated on site soil free from deleterious matter, unless noted otherwise.

E. Backfill: (Walls and retaining walls): Granular, free draining, cohesionless soil. Submit samples and lab analysis for approval.

F. Sub-Soil Drainage Pipe Backfill: Washed pea gravel, well graded, 1/4" to 1/2" size, free of clay lumps, shale, or other materials which might disintegrate. Submit samples for approval.

G. Gravel Cushion under Walks and Concrete Paving Area: Select crushed gravel ranging from 1/4` to 1" in size shall be thoroughly wetted and compacted before concrete is placed.

PART 3 - EXECUTION

3.1 ROUGH GRADING: Excavation and rough grading shall be made to lines and grades shown. Planting and Lawn areas shall be over cut to allow a layer of topsoil not less that 6" thick. Excavations shall be maintained to drain and shall be kept free of excess water. Ponding of water on site will not be permitted. Remove objectionable and excess materials from site when excavated.

3.2 STRUCTURAL EXCAVATION

A. Locate and mark all existing underground utilities and services before beginning structural excavation.

B. Provide excavation for structures and footings, as required for construction, bracing and removal of forms. Bottom of excavating shall be reasonable level. Maintain excavations in as near their natural moisture condition as possible.

3.3 SUB-SOIL DRAINAGE EXCAVATION: Excavate or trench as required for sub-soil drainage pipes. Trenches shall be sized and sloped as detailed.

3.4 EXCAVATION BENEATH SLABS: Beneath slabs on grades, excavate and remove light brown and black clay and silty clay soil.

3.5 FILLING (OUTSIDE STRUCTURE): Roughen and loosen filled areas before placing of fill material. Spread suitable fill material in uniform layers over area not to exceed 6" thick compaction. Wet and work materials as required for proper compaction and thoroughly mix. Compaction shall be by tamping rollers or by utilizing excavation equipment to spread and compact fill to a uniform density equal to natural density of material before excavating. Areas adjacent to building, or where compacting equipment cannot work, shall be compacted with approved tampers. Compact filled areas to lines and grades shown, with allowances for a final layer of topsoil at least 6" thick in lawn areas.

END OF SECTION

SECTION 02210

GEOTECHNICAL DATA

PART 1 - GENERAL

1.1 INVESTIGATION

A. Soil and Subsurface Investigations were conducted at the Site, the results of which are to be found in the report, number ETTL Project No. t507-06, Dated July, 2006, conducted by ETTL Engineers & Consultants, Inc. who is responsible for the test results and report. This Section 02210 Geotechnical Data is included for reference only.

B. Plan of Borings and Log of Borings are attached.

C. A copy of the full report is available at the Architect's office for review.

D. Bidders are urged to review the report, examine soils investigation data, and to make their own investigation of the site before bidding.

PART 2 - PRODUCTS (Not Used)

PART 3 - EXECUTION (Not Used)

END OF SECTION

SECTION 02324

TRENCHING

PART 1 - GENERAL

1.1 SUMMARY

A. Section Includes:
1. Excavating trenches for utilities from 5 feet outside buildings to the utility service
2. Compacted fill from top of utility bedding to finished grade elevations
3. Backfilling and compaction

B. Related Sections:

1. Section 02512 - Site Water Distribution: Water piping and bedding from buildings to utility service
2. Section 02538 - Sanitary Sewer System: Sanitary sewer piping and bedding from buildings to utility service

1.2 DEFINITIONS

A. Utility: Any buried pipe, duct, conduit, or cable.

1.3 SUBMITTALS

A. Excavation Protection Plan (Trench Safety): Describe sheeting, shoring, and bracing materials and installation required to protect excavations and adjacent structures and property; include structural calculations to support plan.

1.4 QUALITY ASSURANCE

A. Perform Work in accordance with Texas Commission on Environmental Quality (TCEQ), Chapter 290, Public Water System Rules and/or Chapter 317, Wastewater System Rules.

1.5 QUALIFICATIONS

A. Prepare Excavation Protection Plan (Trench Safety) under the direct supervision of a Professional Engineer experienced in design of this Work and licensed in the State of Texas.

1.6 FIELD MEASUREMENTS

A. Verify field measurements prior to any required fabrications.

1.7 COORDINATION

A. Verify Work associated with lower elevation utilities is complete before placing higher elevation utilities.

B. Coordinate any work in TxDOT Right Of Way with the local TxDOT Area Maintenance Supervisor.

PART 2 - PRODUCTS (Not Used)

PART 3 - EXECUTION

3.1 LINES AND GRADES

A. Lay pipes to lines and grades indicated on Drawings.
   1. Engineer reserves right to make changes in lines, grades, and depths of utilities when changes are required for Project conditions.

B. Use laser-beam instrument with qualified operator to establish lines and grades.

****** [OR] ******

C. Maintain grade alignment of pipe using string line parallel with grade line and vertically above centerline of pipe.
   1. Establish string line on level batter boards at intervals of not more than 25 feet .
   2. Install batter boards spanning trench, rigidly anchored to posts driven into ground on both sides of trench.
   3. Set three adjacent batter boards before laying pipe to verify grades and line.
   4. Determine elevation and position of string line from elevation and position of offset points or stakes located along pipe route.
   5. Do not locate pipe using sidelines for line or grade.

3.2 PREPARATION

A. Call Local Utility Line Information (One Call) service not less than three working days before performing Work.
   1. Request underground utilities to be located and marked within and surrounding construction areas.

B. Identify required lines, levels, contours, and datum locations.

C. Protect plant life and other features remaining as portion of final landscaping.

D. Protect bench marks and paving from excavating equipment and vehicular traffic.

E. Maintain and protect above and below grade utilities indicated to remain.

F. Establish temporary traffic control when trenching is performed in public right-of-way. Relocate controls as required during progress of Work.

3.3 TRENCHING

A. Excavate subsoil required for utilities to utility service.

B. Remove lumped subsoil, boulders, rock, roots and other deleterious material.

C. Do not advance open trench more than 100 feet ahead of installed pipe.

D. Cut trenches to width indicated on Drawings. Remove water or materials that interfere with Work.

E. Excavate bottom of trenches indicated on Drawings.

F. Excavate trenches to depth indicated on Drawings.

G. Remove excess subsoil not intended for reuse, from site.

3.4 SHEETING AND SHORING

A. Sheet, shore, and brace excavations to prevent danger to persons, structures and adjacent properties and to prevent caving, erosion, and loss of surrounding subsoil.

B. Support trenches more than 4 feet deep excavated through unstable, loose, or soft material. Provide sheeting, shoring, bracing, or other protection to maintain stability of excavation in accordance with the Excavation Protection Plan (Trench Safety).

C. Design sheeting and shoring to be removed at completion of excavation work.

D. Repair damage caused by failure of the sheeting, shoring, or bracing and for settlement of filled excavations or adjacent soil.

E. Repair damage to new and existing Work from settlement, water or earth pressure or other causes resulting from inadequate sheeting, shoring, or bracing.

3.5 BACKFILLING

A. Backfill trenches to contours and elevations with clean select fill materials..

B. Place fill material in continuous layers and compact in 8 inch lifts by mechanically tamping. Achieve a minimum of 90% density by means of Ordinary Compaction.

C. Employ placement method that does not disturb or damage utilities in trench.

D. Maintain optimum moisture content of fill materials to attain required compaction density.

E. Do not leave more than 25 feet of trench open at end of working day.

F. Protect open trench to prevent danger to the public and workers on the site.

3.6 PROTECTION OF FINISHED WORK

A. Reshape and re-compact backfilled trenches subjected to settlement and vehicular traffic during construction.

END OF SECTION

SECTION 02362

TERMITE CONTROL

PART 1 - GENERAL

1.1 RELATED DOCUMENTS

A. Drawings and general provisions of the Contract, including General and Supplementary Conditions and Division 1 Specification Sections, apply to this Section.

1.2 SUMMARY

A. This Section includes the following for termite control:
1. **Non-Chemical System** designed to stop subterranean termites from entering a building by blocking any entrances through the foundation.

1.3 DEFINITIONS

A. EPA: Environmental Protection Agency.

B. PCO: Pest control operator.

1.4 SUBMITTALS

A. Product Data: Manufacturer's descriptive literature, specifications, and installation instructions.

B. Qualification Data: For Installer of termite control products.

C. Warranties: Special warranties specified in this Section.

1.5 QUALITY ASSURANCE

A. Applicator Qualifications: Accredited Installers who have undergone extensive training in both the System as well as understanding the habits of termites in jurisdiction where Project is located and who is experienced and has completed termite control treatment similar to that indicated for this Project and whose work has a record of successful in-service performance.

B. Regulatory Requirements: Formulate and apply termiticides, and label with a Federal registration number, to comply with EPA regulations and authorities having jurisdiction.

1.6 PROJECT CONDITIONS

A. Environmental Limitations: To ensure penetration, do not treat soil that is water saturated or frozen. Do not treat soil while precipitation is occurring. Comply with EPA-Registered Label requirements and requirements of authorities having jurisdiction.

1.7 COORDINATION

A. Coordinate treatment application with excavating, filling, and grading and concreting operations.

1.8 WARRANTY

A. General Warranty: Special warranty specified in this Article shall not deprive Owner of other rights Owner may have under other provisions of the Contract Documents and shall be in addition to, and run concurrent with, other warranties made by Contractor under requirements of the Contract Documents.

B. Special Warranty: Written warranty, signed by Applicator and Contractor certifying that termite control work, consisting will prevent infestation of subterranean termites. If subterranean termite activity or damage is discovered during warranty period, re-treat soil and repair or replace damage caused by termite infestation.

C. Warranty Period: Five years from date of Substantial Completion.

PART 2 - PRODUCTS

2.1 MATERIALS

A. Marine grade stainless steel mesh of a grade not lower than 316 (AISI 31600) made from 0.18 mm diameter wire with mesh openings of 0.66 x 0.45 mm and supplied in widths of 1200 mm and lengths of 30 meters. (47.25 inch x 100 feet).

B. Clamps 301 Stainless Steel.

C. Bonding cement: a specialized bonding cement which bonds the mesh to either concrete, masonry or other termite resistant substrates.

D. Epoxy Resins: Specialized epoxy resins used for bonding of mesh to concrete, masonry, steel and galvanized or zinc alum coated steel substrates.

E. Available Manufacturers: Subject to compliance with requirements, Manufacturers offering products that may be incorporated into the Work include, but are not limited to, the following:
   1. TERMI MESH USA, INC.
   2. Substitutions: Section 01600 - Product Requirements
   3. Others only as approved equivalent by Architect

PART 3 - EXECUTION

3.1 EXAMINATION

A. Examine substrates, areas, and conditions, with Applicator present, for compliance with Manufacturer's requirements, interfaces with earthwork, slab and foundation work, landscaping, and other conditions affecting performance of termite control.
   1. Proceed with application only after unsatisfactory conditions have been corrected.

3.2 PREPARATION

A. General: Comply with the most stringent requirements of authorities having jurisdiction and with Manufacturer's written instructions for preparing substrate. Remove all extraneous sources of wood cellulose and other edible materials such as wood debris, tree stumps and roots, stakes, formwork, and construction waste wood from soil and around foundations.

B. Soil Treatment Preparation: Remove foreign matter and impermeable soil materials that could decrease treatment effectiveness on areas to be treated. Loosen, rake, and level soil to be treated, except previously compacted areas under slabs and footings.

C. Fit filling hose connected to water source at the site with a backflow preventer, complying with requirements of authorities having jurisdiction.

3.3 APPLICATION, GENERAL

A. The System shall be installed in accordance with the Manufacturer's published installation instructions. The system shall only be installed by Installers trained and accredited by Manufacturer.

B. The Manufacturers published instructions shall be strictly adhered to and a copy of the instructions shall be available at all time on the job site during installation.

3.4 TYPICAL INSTALLATION

A. The System will be installed under the slab on ground, in cavity walls, on the outside perimeter of cavity walls, as a cold joint installation between existing structure and over concrete masonry units and new slabs. The mesh is joined by a 10 to 15 mm physical lap joint. This joint will be strengthened by using a hot-glue gun ever 20 inches o.c. along the join.

B. Sealing penetrations through concrete slabs: mesh and clamps system.

END OF SECTION

SECTION 02446

BORING AND JACKING CONDUITS

PART 1 - GENERAL

1.1 SUMMARY

A. Section Includes:
   1. Excavation for approach trenches and pits
   2. Casing pipe
   3. Carrier pipe

B. Related Sections:
   1. Section 02324 - Trenching
   2. Section 02512 - Site Water Distribution

1.2 UNIT PRICE - MEASUREMENT AND PAYMENT

A. Jacked Pipe:
   1. Basis of Measurement: By linear foot measured on invert of jacked pipe from face to face of jacked pipe
   2. Basis of Payment: Includes excavation, jacked pipe, carrier pipe, accessories, tests, and backfill

1.3 REFERENCES

A. ASTM International:
   1. ASTM A53/A53M - Standard Specification for Pipe, Steel, Black and Hot-Dipped, Zinc-Coated, Welded and Seamless

B. American Welding Society:
   1. AWS D1.1 - Structural Welding Code - Steel

C. National Utility Contractors Association:
   1. NUCA - Pipe Jacking & Microtunneling Design Guide
   2. NUCA - Trenchless Excavation Construction Equipment & Methods Manual

1.4 DESIGN REQUIREMENTS

A. Design casing pipe joints of leakproof construction. Design for earth and or other pressures present plus highway H20 loading.
   1. Highway Crossings: Design tunnel for earth and or other pressure loads present, plus AASHTO H20 live loading.

B. Design bracing, backstops, and use jacks of sufficient rating for continuous jacking without stoppage, except for adding pipe sections and as conditions permit, to minimize tendency of ground material to "freeze" around casing pipe.

1.5 SUBMITTALS

A. Section 01330 - Submittal Procedures: Requirements for submittals.

B. Shop Drawings: Prepare scaled shop Drawings to supplement Contract Drawings.
1. Include details of casing, jacking head, sheeting, and other falsework for trenches and pits, and field sketches, and other details, to complete the Work.
2. Show cross section or sections from field survey, showing installation in relation to actual profile of ground.

C. Design Data: Submit casing pipe design calculations and Manufacturer’s data.

D. Submit history of previous work completed of equivalent nature and scope. Include qualification and experience of key personnel.

E. Installation Plan: Submit description of proposed construction plan, dewatering plan, and plan to establish and maintain vertical and horizontal alignment.

F. Traffic Control Plan in accordance with *Texas Manual on Uniform Traffic Control Devices.*

G. Submit emergency response procedures to handle situations when conduit is compromised and jeopardizes integrity of installation or safety.

1.6 CLOSEOUT SUBMITTALS

A. Project Record Documents: Record actual locations of casing and carrier pipe invert elevations.

B. Identify and describe unexpected variations to subsoil conditions or discovery of uncharted utilities.

1.7 QUALITY ASSURANCE

A. Perform work in accordance with Item 476 TxDOT Standard Specifications for *Construction and Maintenance of Highways, Streets, and Bridges, 2004.*

1.8 QUALIFICATIONS

A. Installer: Company specializing in performing work of this section with minimum 5 years experience.
1. Work Experience: Include projects of similar magnitude and conditions.
2. Furnish list of references upon request.

1.9 PRECONSTRUCTION MEETING

A. Section 01300 - Administrative Requirements: Preconstruction meeting.

B. Convene minimum one week prior to commencing work of this section.

1.10 DELIVERY, STORAGE, AND HANDLING

A. Provide temporary end caps and closures on piping and fittings. Maintain in place until installation.

B. Protect piping from entry of foreign materials and water by temporary covers, completing sections of work, and isolating parts of completed system.

C. Accept system components on site in Manufacturer's original containers or configuration. Inspect for damage.

D. Use wooden shipping braces between layers of stacked pipe. Stack piping lengths no more than 3 layers high.

E. Store field joint materials indoors in dry area in original shipping containers. Maintain storage temperature of 60 to 85 degrees F.

F. Support casing and carrier pipes with nylon slings during handling.

1.11 ENVIRONMENTAL REQUIREMENTS

A. Conduct operations so as not to interfere with, interrupt, damage, destroy, or endanger integrity of surface or subsurface structures or utilities, and landscape in immediate or adjacent areas.

1.12 FIELD MEASUREMENTS

A. Verify invert elevations of existing work prior to excavation and installation of casing pipe.

1.13 COORDINATION

A. Section 01300 - Administrative Requirements: Requirements for coordination.

B. Coordinate work with Owner and utilities within construction area.

PART 2 - PRODUCTS

2.1 CASING AND JACKING PIPE MATERIALS

A. Steel Casing Pipe: ASTM A53/A53M, 42,000 psi minimum yield strength, minimum wall thickness of 0.375 inch, full circumference welded joints in accordance with AWS D1.1 to withstand excavation forces.

2.2 CARRIER PIPE MATERIALS

A. Site Water Distribution System Piping: As specified in Section 02512.

2.3 COVER MATERIALS

A. Soil Backfill for Trench Approaches and Pits to Finish Grade: Subsoil with no rocks over 3 inches in diameter, frozen earth or foreign matter.

2.4 ACCESSORIES

A. Supports and Insulators:
1. Steel and Plastic: 14 gage stainless steel band, 5/16 inch stainless steel flange bolts, heavy duty PVC liner, polyethylene or phenolic skids
2. Plastic: Polyethylene casing insulator band and skids with stainless steel bolts

B. End Seals for encasement pipe: Neoprene rubber with stainless steel clamps.

PART 3 - EXECUTION

3.1 EXAMINATION

A. Section 01300 - Administrative Requirements: Verification of existing conditions before starting work.

B. Verify connection size and locations are in accordance with Drawings.

3.2 PREPARATION

A. Identify required lines, levels, contours, and datum locations.

B. Locate, identify, and protect utilities indicated to remain from damage.

C. Protect plant life and other features remaining as portion of final landscaping.

D. Protect bench marks, survey control points, existing structures, fences, sidewalks, paving and curbs from excavating equipment and vehicular traffic.

E. Establish temporary traffic control and detours when trenching is performed in public right-of-way in accordance with the *Texas Manual on Uniform Traffic Control Devices*.

F. Establish elevations of casing with not less than 3 ft of cover.

3.3 DEWATERING

A. Intercept and divert surface drainage precipitation and groundwater away from excavation through use of dikes, curb walls, ditches, pipes, sumps or other means.

B. Develop substantially dry subgrade for prosecution of subsequent operations.

C. Comply with TCEQ requirements for dewatering to any watercourse, prevention of stream degradation, and erosion and sediment control.

3.4 PITS OR APPROACH TRENCHES

A. Excavate approach trenches or pits in accordance with installation plan and as site conditions require.

3.5 CASING PIPE INSTALLATION

A. Boring:
1. Push pipe into ground with boring auger rotating within pipe to remove spoil. Do not advance cutting head ahead of casing pipe except for distance necessary to permit cutting teeth to cut clearance for pipe. Arrange machine bore and cutting head to be removable from within pipe. Arrange face of cutting head to provide barrier to free flow of soft material.
2. When unstable soil is encountered during boring retract cutting head into casing to permit balance between pushing pressure and ratio of pipe advancement to quantity of soil.
3. When voids develop greater than outside diameter of pipe by approximately one inch, grout to fill voids.
4. When boring is obstructed, relocate, jack, or tunnel as directed by Engineer.

B. Jacking:
1. Construct adequate thrust wall normal to proposed line of thrust.
2. Impart thrust load to pipe through suitable thrust ring sufficiently rigid to ensure uniform distribution of thrust load on full pipe circumference.

C. Drilling and Jacking:
1. Use oil field type rock roller bit or plate bit made up of individual roller cutter units solidly welded to pipe which is turned and pushed for its entire length by drilling machine to give bit necessary cutting action.
2. Inject high density slurry (oil field drilling mud) to head as cutter lubricant. Inject slurry at rear of cutter units to prevent jetting action ahead of pipe.

3.6 PRESSURE GROUTING

A. Pressure grout annular space between casing pipe and surrounding earth.

3.7 CARRIER PIPE INSTALLATION

A. Clean, inspect, and handle pipe in accordance with Section 02512.

B. Place carrier pipe in accordance with Section 02512. Exercise care to prevent damage to pipe joints when carrier pipe is placed in casing.

C. Support pipeline within casing so no external loads are transmitted to carrier pipe. Attach supports to barrel of carrier pipe; do not rest carrier pipe on bells.

D. Grout ends of casing to seal.

3.8 TOLERANCES

A. Do not over cut excavation by more than 1 inch greater than outside diameter of casing pipe.

END OF SECTION

SECTION 02512

SITE WATER DISTRIBUTION

PART 1 - GENERAL

1.1 SUMMARY

A. Section Includes:
   1. Pipe and fittings for site water line
   2. Valves

B. Related Sections:
   1. Section 02324 – Trenching: Excavation, Trench Safety, backfilling, compaction and spoil disposal.
   2. Section 02516 - Disinfection of Water Distribution: Disinfection of site service utility water piping
   3. Section 01330 – Submittal Procedures

1.2 LUMP SUM - MEASUREMENT AND PAYMENT

A. Pipe and Fittings:
   1. Provide schedule and cost.

B. Valves and Meter Assemblies:
   1. Provide schedule and cost.

1.3 REFERENCES

A. American Society of Testing Materials:
   1. ASTM A 48, Class 30B, Valve box, casing and cover

B. American Water Works Association:
   1. AWWA C-900, SDR-18 (150 psi) Water Pipe
   2. AWWA C-110 Ductile Iron Fittings
   3. AWWA C-153 Compressed Ductile Iron Fittings
   4. AWWA C- 509 Iron-Body Gate Valves
   5. AWWA C-800 Bronze (Brass) Ball Valves

1.4 SUBMITTALS

A. Section 01330 - Submittal Procedures: Requirements for submittals.

B. Product Data: Submit data on pipe materials, pipe fittings, valves and accessories.

1.5 CLOSEOUT SUBMITTALS

A. Project Record Documents: Record actual locations of piping, valves and connections.

B. Identify and describe unexpected variations to subsoil conditions or discovery of uncharted utilities.

1.6 QUALITY ASSURANCE

A. Perform Work in accordance with Texas Commission on Environmental Quality (TCEQ), Chapter 290, Public Water Rules and Regulations.

B. Valves: Manufacturer's name and pressure rating marked on valve body.

1.7 DELIVERY, STORAGE, AND HANDLING

A. Deliver and store valves in shipping containers with labeling in place.

PART 2 - PRODUCTS

2.1 WATER PIPING

A. Polyvinyl Chloride Water Pipe
   1. Pipe: AWWA C-900 SDR 18 (150 psi)
   2. Fittings: AWWA C-110 or AWWA C-153
   3. Pipe: Schedule 80 ASTM D1785
   4. Fittings: ASTM D2466

2.2 GATE VALVES

A. 3 inches and Larger: AWWA C509, Iron body, bronze trim, non-rising stem with square nut, single wedge, resilient seat, mechanical joint ends, extension box and valve key.

2.3 BALL VALVES

A. Two (2) inches and smaller: AWWA C800, Brass body, teflon coated brass ball, rubber seats and stem seals, compression inlet end, compression outlet, extension box and valve key.

2.4 VALVE BOXES

A. Cast iron valve boxes for buried valves, 2 section adjustable screw type, suitable for depth of cover, with base, top section and cover.

B. At least 5 inches in diameter, 3/16 inch thick, with suitable cast iron bases and covers.

C. Coat valve boxes and covers by dipping in hot bituminous varnish.

D. Locking type covers. Identify covers with casting mark “WATER”.

E. Provide precast concrete valve or meter boxes with cast iron lids.

2.3 UNDERGROUND PIPE MARKERS

A. Trace Wire: Magnetic detectable conductor.

PART 3 - EXECUTION

3.1 EXAMINATION

A. Section 01300 - Administrative Requirements: Verification of existing conditions before starting work.

3.2 PREPARATION

A. Cut pipe ends square, ream pipe and tube ends to full pipe diameter, remove burrs.

B. Remove scale and dirt on inside and outside before assembly.

3.3 INSTALLATION - PIPE

A. Install access fittings to permit disinfection of water system performed under Section 02516.

B. Install trace wire.

3.4 INSTALLATION - VALVES AND HYDRANTS

A. Set valves on pea gravel.

B. Center and plumb valve box over valve. Set box cover flush with finished grade and provide a concrete collar as shown in Drawings.

3.5 TRENCH SAFETY SYSTEMS

A. If required, contractor shall be responsible for providing Trench Safety Systems in accordance with current State and OSHA regulations.

3.6 FIELD QUALITY CONTROL

A. Perform pressure test on domestic site water distribution system in accordance with AWWA C-605.

END OF SECTION

SECTION 02516

DISINFECTION OF WATER DISTRIBUTION

PART 1 - GENERAL

1.1 SUMMARY

A. Section includes disinfection of potable water distribution [and transmission] system; and testing and reporting results.

B. Related Sections:

1. Section 02512 - Site Water Distribution Product and Execution requirements for installation, testing, of site domestic water distribution piping

1.2 REFERENCES

A. American Water Works Association:
1. AWWA B300 - Hypochlorites
2. AWWA B302 - Ammonium Sulfate
3. AWWA B303 - Sodium Chlorite
4. AWWA C651 - Disinfecting Water Mains

1.3 SUBMITTALS

A. Section 01330 - Submittal Procedures: Requirements for submittals.

B. Product Data: Submit procedures, proposed chemicals, and treatment levels for review.

C. Test Reports: Indicate results comparative to specified requirements.

D. Certificate: Certify cleanliness of water distribution system meets or exceeds TCEQ Chapter 290 requirements.

1.4 CLOSEOUT SUBMITTALS

A. Disinfection Report:
1. Type and form of disinfectant used
2. Date and time of disinfectant injection start and time of completion
3. Test locations
4. Name of person collecting samples
5. Initial and 24 hour disinfectant residuals in treated water in ppm for each outlet tested
6. Date and time of flushing start and completion

7. Disinfectant residual after flushing in ppm for each outlet tested

B. Bacteriological Report:
1. Date issued, project name, and testing laboratory name, address, and telephone number
2. Time and date of water sample collection
3. Name of person collecting samples
4. Test locations
5. Initial and 24 hour disinfectant residuals in ppm for each outlet tested
6. Coliform bacteria test results for each outlet tested
7. Certify water conforms, or fails to conform, to bacterial standards of TCEQ

1.5 QUALITY ASSURANCE

A. Perform Work in accordance with AWWA C651.

1.6 QUALIFICATIONS

A. Testing Firm: Company specializing in testing potable water systems, approved by State of Texas.

B. Submit bacteriologist's signature and authority associated with testing.

PART 2 - PRODUCTS

2.1 DISINFECTION CHEMICALS

A. Chemicals: AWWA B300, Hypochlorite, AWWA B302, Ammonium Sulfate, and AWWA B303, Sodium Chlorite.

PART 3 - EXECUTION

3.1 EXAMINATION

A. Section 01300 - Administrative Requirements: Verification of existing conditions before starting work.

B. Verify piping system has been cleaned, inspected, and pressure tested.

C. Perform scheduling and disinfecting activity with start-up, water pressure testing, adjusting and balancing, demonstration procedures, including coordination with related systems.

3.2 INSTALLATION

A. Provide and attach required equipment to perform the Work of this section.

B. Perform disinfection of water distribution system and installation of system and pressure testing. Refer to Section 02512.

C. Inject treatment disinfectant into piping system.

D. Maintain disinfectant in system for 24 hours.

E. Flush, circulate, and clean until required cleanliness is achieved; use domestic water.

F. Replace permanent system devices removed for disinfection.

3.3 FIELD QUALITY CONTROL

A. Disinfection, Flushing, and Sampling:
1. Disinfect pipeline installation in accordance with AWWA C651. Use of liquid chlorine is not permitted
2. Upon completion of retention period required for disinfection, flush pipeline until chlorine concentration in water leaving pipeline is no higher than that generally prevailing in existing system or is acceptable for domestic use.
3. Legally dispose of chlorinated water. When chlorinated discharge may cause damage to environment, apply neutralizing chemical to chlorinated water to neutralize chlorine residual remaining in water.
4. After final flushing and before pipeline is connected to existing system, or placed in service, employ an approved independent testing laboratory to sample, test and certify water quality suitable for human consumption.

END OF SECTION

SECTION 02538

SANITARY SEWER SYSTEM

PART 1 - GENERAL

1.1 SUMMARY

A. Section Includes:
1. Sanitary sewage pipe
2. Manholes
3. Bedding and cover materials

B. Related Sections:
1. Section 02320 - Backfill: Requirements for backfill to be placed by this section
2. Section 02324 - Trenching: Execution requirements for trenching required by this section

1.2 REFERENCES

A. ASTM International:
1. ASTM A48, Manhole Rings and covers (32” diameter covers) Gray Cast or ASTM A536, Ductile Iron
2. ASTM D1785 - Standard Specification for Poly (Vinyl Chloride) (PVC) Plastic Pipe, Schedules 40, 80, and 120
3. ASTM D2466 - Standard Specification for Poly (Vinyl Chloride) (PVC) Plastic Pipe Fittings, Schedule 40
4. ASTM D2564 - Standard Specification for Solvent Cements for Poly (Vinyl Chloride) (PVC) Plastic Piping Systems
5. ASTM D2855 - Standard Practice for Making Solvent-Cemented Joints with Poly (Vinyl Chloride) (PVC) Pipe and Fittings
6. ASTM D3034 - Standard Specification for Type PSM Poly (Vinyl Chloride) (PVC) Sewer Pipe and Fittings
7. ASTM F477 - Standard Specification for Elastomeric Seals (Gaskets) for Joining Plastic Pipe

1.3 DEFINITIONS

A. Bedding: Fill placed under, beside and directly over pipe, prior to subsequent backfill operations.

1.4 SUBMITTALS

A. Section 01330 - Submittal Procedures: Requirements for submittals.

B. Product Data: Submit data indicating pipe material used, pipe accessories, and manhole frames and covers.

1.5 CLOSEOUT SUBMITTALS

A. Section 01700 - Execution Requirements: Requirements for submittals.

B. Project Record Documents: Record location of pipe runs, connections, manholes, and invert elevations.

1.6 QUALITY ASSURANCE

A. Perform Work in accordance with Texas Commission on Environmental Quality (TCEQ), Chapter 317, Wastewater systems.

1.7 PRE-INSTALLATION MEETINGS

A. Section 01300 - Administrative Requirements: Pre-installation meeting.

1.8 FIELD MEASUREMENTS

A. Verify field measurements and elevations as indicated on Drawings.

1.9 COORDINATION

A. Section 01300 - Administrative Requirements: Coordination and project conditions.

B. Coordinate the Work with termination of sanitary sewer connection outside buildings, and connection to municipal sewer utility service.

PART 2 - PRODUCTS

2.1 SANITARY SEWAGE PIPE

A. Plastic Pipe: ASTM D3034, Type PSM, Poly (Vinyl Chloride) (PVC) material; inside nominal diameter of 6 inches, bell and spigot style rubber ring sealed gasket joint.
   1. Fittings: PVC
   2. Joints: ASTM F477, elastomeric gaskets

2.2 MANHOLES

A. Manhole Lid and Frame Manufacturers:
   1. East Jordan Iron Works (formerly Western Iron Works), San Angelo, Texas

B. Manhole Lid and Frame:
   1. Construction: Cast iron ring and ductile iron cover
   2. Lid Design: Marked “SEWER”

C. Shaft Construction and Concentric Cone Top Section: Reinforced precast Concrete pipe sections.

D. Base Pad: Cast-In-Place concrete (Class A, 3000 psi), leveled top surface to receive concrete shaft sections, sleeved to receive sanitary sewer pipe sections.

2.3 BEDDING AND COVER MATERIALS

A. Bedding: Washed sand.

B. Soil Backfill from Above Bedding to Finish Grade: Select compacted (Subsoil with no rocks over 2 inches in diameter, frozen earth or foreign matter.)

PART 3 - EXECUTION

3.1 EXAMINATION

A. Section 01300 - Administrative Requirements: Verification of existing conditions before starting work.

B. Verify trench cut is ready to receive work and excavations, dimensions, and elevations are as indicated on drawings.

3.2 PREPARATION

A. Correct over excavation with fine aggregate or sand.

B. Remove large stones or other hard matter which could damage pipe or impede consistent backfilling or compaction.

3.3 BEDDING

A. Excavate pipe trench in accordance with Section 02324.

B. Place bedding material at trench bottom, level materials in continuous layer not exceeding 6 inches.

C. Maintain optimum moisture content of bedding material to attain required compaction density.

3.4 INSTALLATION - PIPE

A. Lay pipe to slope gradients noted on drawings; with maximum variation from indicated slope of 0.1 %.

B. Install bedding at sides and over top of pipe to minimum compacted thickness of 12 inches.

C. Refer to Section 02324 for backfilling and compacting requirements. Do not displace or damage pipe when compacting.

D. Install site sanitary sewage system piping to 5 feet of building.

3.5 INSTALLATION - MANHOLES

A. Excavate for manholes.

B. Form bottom of excavation clean and smooth to correct elevation.

C. Form and place cast-in-place concrete base pad, with provision for sanitary sewer pipe end sections.

D. Establish elevations and pipe inverts for inlets and outlets as indicated on Drawings.

E. Mount lid and frame level in grout, secured to top cone section to elevation indicated.

3.6 FIELD QUALITY CONTROL

A. Perform test on site sanitary sewage system in accordance with TCEQ rules.

3.7 PROTECTION OF FINISHED WORK

A. Section 01700 - Execution Requirements: Requirements for protecting finished Work.

B. Protect pipe and aggregate cover from damage or displacement until backfilling operation is in progress.

END OF SECTION

SECTION 02539

ON SITE SEWER FACILITY

THIS SPECIFICATION SECTION WILL BE PROVIDED BY ADDENDUM

SECTION 02741

HOT-MIX ASPHALT PAVING / STRIPING

PART 1 - GENERAL

1.1 RELATED DOCUMENTS

A. Drawings and general provisions of the Contract, including General and Supplementary Conditions and Division 1 Specification Sections, apply to this Section.

1.2 SUMMARY

A. This Section includes the following:
   1. Hot-mix asphalt paving
   2. Pavement-marking paint

B. Related Sections include the following:
   1. Division 2 Section "Earthwork" for aggregate sub-base and base courses and for aggregate pavement shoulders
   2. Division 2 Section "Pavement Joint Sealants" for joint sealants and fillers at paving terminations

1.3 DEFINITIONS

A. Hot-Mix Asphalt Paving Terminology: Refer to ASTM D 8 for definitions of terms.

B. TxDOT: Texas Department of Transportation.

1.4 SYSTEM DESCRIPTION

A. Provide hot-mix asphalt paving according to materials, workmanship, and other applicable requirements of standard specifications of TxDOT.
   1. Standard Specification: See 340, Hot Mix Asphaltic Concrete Pavement, and any related items, of the Standard Specifications for Construction and Maintenance of Highways, Streets, and Bridges (2004).
   2. Measurement and payment provisions and safety program submittals included in standard specifications do not apply to this Section.

1.5 SUBMITTALS

A. Product Data: For each type of product indicated. Include technical data and tested physical and performance properties.

B. Job-Mix Designs: Certification, by authorities having jurisdiction, of approval of each job mix proposed for the Work.

C. Job-Mix Designs: For each job mix proposed for the Work.

D. Material Test Reports: For each paving material.

E. Material Certificates: For each paving material, signed by Manufacturers.

1.6 QUALITY ASSURANCE

A. Manufacturer Qualifications: A qualified Manufacturer.
1. Manufacturer shall be a paving-mix Manufacturer registered with and approved by authorities having jurisdiction or TxDOT.

B. Testing Agency Qualifications: Qualified according to ASTM D 3666 for testing indicated, as documented according to ASTM E 548.

C. Regulatory Requirements: Comply with TxDOT specifications previously referenced for asphalt paving work.

D. Asphalt-Paving Publication: Comply with AI MS-22, "Construction of Hot Mix Asphalt Pavements," unless more stringent requirements are indicated.

1.7 DELIVERY, STORAGE, AND HANDLING

A. Deliver pavement-marking materials to Project site in original packages with seals unbroken and bearing Manufacturer's labels containing brand name and type of material, date of manufacture, and directions for storage.

B. Store pavement-marking materials in a clean, dry, protected location within temperature range required by Manufacturer. Protect stored materials from direct sunlight.

1.8 PROJECT CONDITIONS

A. Environmental Limitations: Do not apply asphalt materials if subgrade is wet or excessively damp or if the following conditions are not met:
1. Prime and Tack Coats: Minimum surface temperature of 60 deg F (15.5 deg C)
2. Asphalt Base Course: Minimum surface temperature of 40 deg F (4 deg C) and rising at time of placement
3. Asphalt Surface Course: Minimum surface temperature of 60 deg F (15.5 deg C) at time of placement

B. Pavement-Marking Paint: Proceed with pavement marking only on clean, dry surfaces and at a minimum ambient or surface temperature of 40 deg F (4 deg C) for oil-based materials, 50 deg F (10 deg C) for water-based materials, and not exceeding 95 deg F (35 deg C).

PART 2 - PRODUCTS

2.1 AGGREGATES

A. Must comply with previously referenced TxDOT specifications.

2.2 ASPHALT MATERIALS

A. Must comply with previously referenced TxDOT specifications.

2.3 AUXILIARY MATERIALS

A. Must comply with previously referenced TxDOT specifications.

2.4 MIXES

A. Must comply with previously referenced TxDOT specifications.

PART 3 - EXECUTION

3.1 EXAMINATION

A. Must comply with previously referenced TxDOT specifications.

3.2 SURFACE PREPARATION

A. Must comply with previously referenced TxDOT specifications.

3.3 HOT-MIX ASPHALT PLACING

A. Must comply with previously referenced TxDOT specifications.

3.4 JOINTS

A. Must comply with previously referenced TxDOT specifications.

3.5 COMPACTION

A. Must comply with previously referenced TxDOT specifications.

3.6 INSTALLATION TOLERANCES

A. Must comply with previously referenced TxDOT specifications.

3.7 PAVEMENT MARKING

A. Do not apply pavement-marking paint until layout, colors, and placement have been verified with Architect.

B. Allow paving to age for 30 days before starting pavement marking.

C. Sweep and clean surface to eliminate loose material and dust.

D. Apply paint with mechanical equipment to produce pavement markings, of dimensions indicated, with uniform, straight edges. Apply at Manufacturer's recommended rates to provide a minimum wet film thickness of 15 mils (0.4 mm).

3.8 FIELD QUALITY CONTROL

A. Testing Agency: Owner will engage a qualified independent testing and inspecting agency to perform field tests and inspections and to prepare test reports.
   1. Testing agency will conduct and interpret tests and state in each report whether tested Work complies with or deviates from specified requirements.

B. Additional testing and inspecting, at Contractor's expense, will be performed to determine compliance of replaced or additional work with specified requirements.

C. Thickness: In-place compacted thickness of hot-mix asphalt courses will be determined according to the previously referenced TxDOT Specifications.

D. Surface Smoothness: Finished surface of each hot-mix asphalt course will be tested for compliance with smoothness tolerances.

E. In-Place Density: Testing agency will take samples of uncompacted paving mixtures and compacted pavement according to previously referenced TxDOT specifications.

F. Remove and replace or install additional hot-mix asphalt where test results or measurements indicate that it does not comply with specified requirements.

END OF SECTION

SECTION 02751

CEMENT CONCRETE

PART 1 - GENERAL

1.1 RELATED DOCUMENTS

A. Drawings and general provisions of the Contract, including General and Supplementary Conditions and Division 1 Specification Sections, apply to this Section.

1.2 SUMMARY

A. This Section includes exterior cement concrete for the following:
   1. Curbs and gutters
   2. Sidewalks
   3. Retaining walls

B. Related Sections include the following:
   1. Division 2 Section "Earthwork" for subgrade preparation, grading, and sub-base course
   2. Division 2 Section "Pavement Joint Sealants" for joint sealants within concrete pavement and at isolation joints of concrete pavement with adjacent construction
   3. Division 3 Section "Cast-in-Place Concrete" for general building applications of concrete

1.3 DEFINITIONS

A. Cementitious Materials: Portland cement alone or in combination with one or more of blended hydraulic cement, expansive hydraulic cement, fly ash and other pozzolans, ground granulated blast-furnace slag, and silica fume.

1.4 SUBMITTALS

A. Design Mixes: For each concrete mix. Include alternate mix designs when characteristics of materials, project conditions, weather, test results, or other circumstances warrant adjustments.

B. Material Test Reports: From a qualified testing agency indicating and interpreting test results for compliance of the following with requirements indicated, based on comprehensive testing of current materials:
   1. Cementitious materials and aggregates
   2. Steel reinforcement and reinforcement accessories
   3. Admixtures
   4. Curing compounds
   5. Bonding agent or adhesive
   6. Joint fillers

1.5 QUALITY ASSURANCE

A. Installer Qualifications: An experienced Installer who has completed work similar in material, design, and extent to that indicated for this Project and whose work has resulted in construction with a record of successful in-service performance.

B. Manufacturer Qualifications: Manufacturer of ready-mixed concrete products complying with ASTM C 94 requirements for production facilities and equipment.
1. Manufacturer must be certified according to the National Ready Mix Concrete Association's Plant Certification Program.

C. Testing Agency Qualifications: An independent testing agency, acceptable to authorities having jurisdiction, qualified according to ASTM C 1077 and ASTM E 329 to conduct the testing indicated, as documented according to ASTM E 548.

D. Source Limitations: Obtain each type or class of cementitious material of the same brand from the same Manufacturer's plant and each aggregate from one source.

E. ACI Publications: Comply with ACI 301, "Specification for Structural Concrete," unless modified by the requirements of the Contract Documents.

F. Concrete Testing Service: Owner will engage a qualified independent testing agency to perform material evaluation tests and to design concrete mixes.

1.6 PROJECT CONDITIONS

A. Traffic Control: Maintain access for vehicular and pedestrian traffic as required for other construction activities.

PART 2 - PRODUCTS

2.1 FORMS

A. Form Materials: Plywood, metal, metal-framed plywood, or other approved panel-type materials to provide full-depth, continuous, straight, smooth exposed surfaces.
1. Use flexible or curved forms for curves of a radius 100 feet (30.5 m) or less.

B. Form-Release Agent: Commercially formulated form-release agent that will not bond with, stain, or adversely affect concrete surfaces and will not impair subsequent treatments of concrete surfaces.

2.2 STEEL REINFORCEMENT

A. Reinforcement Bars: ASTM A 615/A 615M, Grade 60 (Grade 420), deformed

B. Steel Bar Mats: ASTM A 184/A 184M; with ASTM A 615/A 615M, Grade 60 (Grade 420), deformed bars; assembled with clips

C. Plain Steel Wire: ASTM A 82, as drawn

D. Epoxy-Coated Wire: ASTM A 884/A 884M, Class A coated, plain steel

E. Joint Dowel Bars: Plain steel bars, ASTM A 615/A 615M, Grade 60 (Grade 420). Cut bars true to length with ends square and free of burrs.

F. Bar Supports: Bolsters, chairs, spacers, and other devices for spacing, supporting, and fastening reinforcement bars, welded wire fabric, and dowels in place. Manufacture bar supports according to CRSI's "Manual of Standard Practice" from steel wire, plastic, or pre-cast concrete or fiber-reinforced concrete of greater compressive strength than concrete, and as follows:
1. Equip wire bar supports with sand plates or horizontal runners where base material will not support chair legs.

G. Epoxy Repair Coating: Liquid two-part epoxy repair coating, compatible with epoxy coating on reinforcement.

2.3 CONCRETE MATERIALS

A. General: Use the same brand and type of cementitious material from the same Manufacturer throughout the Project.

B. Portland cement: ASTM C 150, Type I or II.
1. Fly Ash: ASTM C 618, Class F or C

C. Aggregate: ASTM C 33, uniformly graded, from a single source, with coarse aggregate as follows:Class: 4M.
1. Maximum Aggregate Size: 1 inch (25 mm) nominal
2. Do not use fine or coarse aggregates containing substances that cause spalling.

D. Water: ASTM C 94.

2.4 ADMIXTURES

A. General: Admixtures certified by Manufacturer to contain not more than 0.1 percent water-soluble chloride ions by mass of cement and to be compatible with other admixtures.

B. Air-Entraining Admixture: ASTM C 260.

2.5 CURING MATERIALS

A. Absorptive Cover: AASHTO M 182, Class 2, burlap cloth made from jute or kenaf, weighing approximately 9 oz./sq. yd. (305 g/sq. m) dry.

B. Moisture-Retaining Cover: ASTM C 171, polyethylene film or white burlap-polyethylene sheet.

C. Water: Potable.

D. Evaporation Retarder: Waterborne, monomolecular film forming, manufactured for application to fresh concrete.

E. Clear Solvent-Borne Liquid-Membrane-Forming Curing Compound: ASTM C 309, Type 1, Class B.

F. Available Products: Subject to compliance with requirements, products that may be incorporated into the Work include, but are not limited to, the following:

1. Evaporation Retarder:
   a. Cimfilm; Axim Concrete Technologies
   b. Finishing Aid Concentrate; Burke Group, LLC (The)
   c. Spray-Film; ChemMasters
   d. Aquafilm; Conspec Marketing & Manufacturing Co., Inc.
   e. Sure Film; Dayton Superior Corporation
   f. Eucobar; Euclid Chemical Co.
   g. Vapor Aid; Kaufman Products, Inc.
   h. Lambco Skin; Lambert Corporation
   i. E-Con; L&M Construction Chemicals, Inc.
   j. Confilm; Master Builders, Inc.
   k. Waterhold; Metalcrete Industries
   l. Rich Film; Richmond Screw Anchor Co.
   m. SikaFilm; Sika Corporation
   n. Finishing Aid; Symons Corporation
   o. Certi-Vex EnvioAssist; Vexcon Chemicals, Inc.
2. Clear Solvent-Borne Liquid-Membrane-Forming Curing Compound:
   a. AH Curing Compound #2 DR; Anti-Hydro International, Inc.
   b. Res-X Cure All Resin; Burke Group, LLC (The)
   c. RX Cure; Conspec Marketing & Manufacturing Co., Inc.
   d. Day-Chem Rez Cure; Dayton Superior Corporation
   e. Kurez DR; Euclid Chemical Co.
   f. Nitocure S; Fosroc
   g. #64 Resin Cure; Lambert Corporation
   h. L&M Cure DR; L&M Construction Chemicals, Inc.
   i. 3100-Clear; W. R. Meadows, Inc.
   j. Seal N Kure FDR; Metalcrete Industries
   k. Rich Cure; Richmond Screw Anchor Co.
   l. Resi-Chem C309; Symons Corporation
   m. Horncure 30; Tamms Industries Co., Div. of LaPorte Construction Chemicals North America, Inc.
   n. Uni Res 150; Unitex
   o. Certi-Vex RC; Vexcon Chemicals, Inc.

2.6 RELATED MATERIALS

A. Expansion- and Isolation-Joint-Filler Strips: ASTM D 1751, asphalt-saturated cellulosic fiber.

B. Expansion- and Isolation-Joint-Filler Strips: ASTM D 1752, cork or self-expanding cork.

C. Expansion- and Isolation-Joint-Filler Strips: ASTM D 1751, asphalt-saturated cellulosic fiber, or ASTM D 1752, cork or self-expanding cork.

D. Bonding Agent: ASTM C 1059, Type II, non-redispersible, acrylic emulsion or styrene butadiene.

E. Epoxy Bonding Adhesive: ASTM C 881, two-component epoxy resin, capable of humid curing and bonding to damp surfaces, of class and grade to suit requirements, and as follows:
1. Type II, non-load bearing, for bonding freshly mixed concrete to hardened concrete
2. Types I and II, non-load bearing, for bonding hardened or freshly mixed concrete to hardened concrete
3. Types IV and V, load bearing, for bonding hardened or freshly mixed concrete to hardened concrete

F. Available Products: Subject to compliance with requirements.

2.7 CONCRETE MIXES

A. Prepare design mixes, proportioned according to ACI 211.1 and ACI 301, for each type and strength of normal-weight concrete determined by either laboratory trial mixes or field experience.

B. Owner will hire a qualified independent testing agency for preparing and reporting proposed mix designs for the trial batch method.

C. Proportion mixes to provide concrete with the following properties:
1. Compressive Strength (28 Days): 3500 psi (24.1 MPa)
2. Maximum Water-Cementitious Materials Ratio: 0.50
3. Slump Limit: 4 inches (100 mm)

D. Cementitious Materials: Limit percentage, by weight, of cementitious materials other than Portland cement in concrete as follows:
1. Fly Ash: 20 percent
2. Combined Fly Ash and Pozzolan: 20 percent

E. Add air-entraining admixture at Manufacturer's prescribed rate to result in concrete at point of placement having an air content of 2.5 to 4.5 percent.

F. Add air-entraining admixture at Manufacturer's prescribed rate to result in concrete at point of placement having an air content as follows within a tolerance of plus or minus 1.5 percent:
1. Air Content: 5.5 percent for 1-1/2-inch (38-mm) maximum aggregate
2. Air Content: 6.0 percent for 1-inch (25-mm) maximum aggregate
3. Air Content: 6.0 percent for 3/4-inch (19-mm) maximum aggregate

2.8 CONCRETE MIXING

A. Ready-Mixed Concrete: Comply with requirements and with ASTM C 94.

PART 3 - EXECUTION

3.1 PREPARATION

A. Proof-roll prepared sub-base surface to check for unstable areas and verify need for additional compaction. Proceed with pavement only after nonconforming conditions have been corrected and subgrade is ready to receive pavement.

B. Remove loose material from compacted sub-base surface immediately before placing concrete.

3.2 EDGE FORMS AND SCREED CONSTRUCTION

A. Set, brace, and secure edge forms, bulkheads, and intermediate screed guides for pavement to required lines, grades, and elevations. Install forms to allow continuous progress of work and so forms can remain in place at least 24 hours after concrete placement.

B. Clean forms after each use and coat with form release agent to ensure separation from concrete without damage.

3.3 STEEL REINFORCEMENT

A. General: Comply with CRSI's "Manual of Standard Practice" for fabricating reinforcement and with recommendations in CRSI's "Placing Reinforcing Bars" for placing and supporting reinforcement.
   1. Apply epoxy repair coating to uncoated or damaged surfaces of epoxy-coated reinforcement.

B. Clean reinforcement of loose rust and mill scale, earth, ice, or other bond-reducing materials.

C. Arrange, space, and securely tie bars and bar supports to hold reinforcement in position during concrete placement. Maintain minimum cover to reinforcement.

D. Install fabricated bar mats in lengths as long as practicable. Handle units to keep them flat and free of distortions. Straighten bends, kinks, and other irregularities, or replace units as required before placement. Set mats for a minimum 2-inch (50-mm) overlap to adjacent mats.

3.4 JOINTS

A. General: Construct construction, isolation, and contraction joints and tool edgings true to line with faces perpendicular to surface plane of concrete. Construct transverse joints at right angles to centerline, unless otherwise indicated.
   1. When joining existing pavement, place transverse joints to align with previously placed joints, unless otherwise indicated.

B. Construction Joints: Set construction joints at side and end terminations of pavement and at locations where pavement operations are stopped for more than one-half hour, unless pavement terminates at isolation joints.

1. Provide preformed galvanized steel or plastic keyway-section forms or bulkhead forms with keys, unless otherwise indicated. Embed keys at least 1-1/2 inches (38 mm) into concrete.
2. Continue reinforcement across construction joints, unless otherwise indicated. Do not continue reinforcement through sides of pavement strips, unless otherwise indicated.
3. Provide tie bars at sides of pavement strips where indicated.
4. Use a bonding agent at locations where fresh concrete is placed against hardened or partially hardened concrete surfaces.
5. Use epoxy bonding adhesive at locations where fresh concrete is placed against hardened or partially hardened concrete surfaces.

C. Isolation Joints: Form isolation joints of preformed joint-filler strips abutting concrete curbs, catch basins, manholes, inlets, structures, walks, other fixed objects, and where indicated.

1. Locate expansion joints at intervals of 50 feet (15.25 m), unless otherwise indicated.
2. Extend joint fillers full width and depth of joint.
3. Terminate joint filler less than 1/2 inch (12 mm) or more than 1 inch (25 mm) below finished surface if joint sealant is indicated, or as suggested by Manufacturer.
4. Place top of joint filler flush with finished concrete surface if joint sealant is not indicated.
5. Furnish joint fillers in one-piece lengths. Where more than one length is required, lace or clip joint-filler sections together.
6. Protect top edge of joint filler during concrete placement with metal, plastic, or other temporary preformed cap. Remove protective cap after concrete has been placed on both sides of joint.

D. Install dowel bars and support assemblies at joints where indicated. Lubricate or asphalt-coat one-half of dowel length to prevent concrete bonding to one side of joint.

E. Contraction Joints: Form weakened-plane contraction joints, sectioning concrete into areas as indicated. Construct contraction joints for a depth equal to at least one-fourth of the concrete thickness, as follows:

1. Grooved Joints: Form contraction joints after initial floating by grooving and finishing each edge of joint with groover tool to the following radius. Repeat grooving of contraction joints after applying surface finishes. Eliminate groover marks on concrete surfaces.
   a. Radius: 1/4 inch (6 mm)
2. Sawed Joints: Form contraction joints with power saws equipped with shatter-proof abrasive or diamond-rimmed blades. Cut 1/8-inch- (3-mm-) wide joints into concrete when cutting action will not tear, abrade, or otherwise damage surface and before developing random contraction cracks.

F. Edging: Tool edges of pavement, gutters, curbs, and joints in concrete after initial floating with an edging tool to the following radius. Repeat tooling of edges after applying surface finishes. Eliminate tool marks on concrete surfaces.
   1. Radius: 1/4 inch (6 mm)

3.5 CONCRETE PLACEMENT

A. Inspection: Before placing concrete, inspect and complete formwork installation, reinforcement steel, and items to be embedded or cast in. Notify other trades to permit installation of their work.

B. Remove snow, ice, or frost from sub-base surface and reinforcement before placing concrete. Do not place concrete on frozen surfaces.

C. Moisten sub-base to provide a uniform dampened condition at the time concrete is placed. Do not place concrete around manholes or other structures until they are at the required finish elevation and alignment.

D. Comply with requirements and with recommendations in ACI 304R for measuring, mixing, transporting, and placing concrete.

E. Do not add water to concrete during delivery, at Project site, or during placement.

F. Deposit and spread concrete in a continuous operation between transverse joints. Do not push or drag concrete into place or use vibrators to move concrete into place.

G. Consolidate concrete by mechanical vibrating equipment supplemented by hand-spading, rodding, or tamping. Use equipment and procedures to consolidate concrete according to recommendations in ACI 309R.
   1. Consolidate concrete along face of forms and adjacent to transverse joints with an internal vibrator. Keep vibrator away from joint assemblies, reinforcement, or side forms. Use only square-faced shovels for hand-spreading and consolidation. Consolidate with care to prevent dislocating reinforcement, dowels, and joint devices.

H. Place concrete in two operations; strike off initial pour for entire width of placement and to the required depth below finish surface. Lay welded wire fabric or fabricated bar mats immediately in final position. Place top layer of concrete, strike off, and screed.
   1. Remove and replace portions of bottom layer of concrete that have been placed more than 15 minutes without being covered by top layer, or use bonding agent if approved by Architect.

I. Screed pavement surfaces with a straightedge and strike off. Commence initial floating using bull floats or darbies to form an open textured and uniform surface plane before excess moisture or bleed water appears on the surface. Do not further disturb concrete surfaces before beginning finishing operations or spreading dry-shake surface treatments.

J. Curbs and Gutters: When automatic machine placement is used for curb and gutter placement, submit revised mix design and laboratory test results that meet or exceed requirements. Produce curbs and gutters to required cross section, lines, grades, finish, and

jointing as specified for formed concrete. If results are not approved, remove and replace with formed concrete.

K. Slip-Form Pavers: When automatic machine placement is used for pavement, submit revised mix design and laboratory test results that meet or exceed requirements. Produce pavement to required thickness, lines, grades, finish, and jointing as required for formed pavement.
1. Compact sub-base and prepare subgrade of sufficient width to prevent displacement of paver machine during operations.

L. When adjoining pavement lanes are placed in separate pours, do not operate equipment on concrete until pavement has attained 85 percent of its 28-day compressive strength.

M. Cold-Weather Placement: Comply with ACI 306.1 and as follows. Protect concrete work from physical damage or reduced strength that could be caused by frost, freezing actions, or low temperatures.
1. When air temperature has fallen to or is expected to fall below 40 deg F (4.4 deg C), uniformly heat water and aggregates before mixing to obtain a concrete mixture temperature of not less than 50 deg F (10 deg C) and not more than 80 deg F (27 deg C) at point of placement.
2. Do not use frozen materials or materials containing ice or snow.
3. Do not use calcium chloride, salt, or other materials containing antifreeze agents or chemical accelerators, unless otherwise specified and approved in mix designs.

N. Hot-Weather Placement: Place concrete according to recommendations in ACI 305R and as follows when hot-weather conditions exist:
1. Cool ingredients before mixing to maintain concrete temperature at time of placement below 90 deg F (32 deg C). Chilled mixing water or chopped ice may be used to control temperature, provided water equivalent of ice is calculated to total amount of mixing water. Using liquid nitrogen to cool concrete is Contractor's option.
2. Cover reinforcement steel with water-soaked burlap so steel temperature will not exceed ambient air temperature immediately before embedding in concrete.
3. Fog-spray forms, reinforcement steel, and subgrade just before placing concrete. Keep subgrade moisture uniform without standing water, soft spots, or dry areas.

3.6 CONCRETE FINISHING

A. General: Wetting of concrete surfaces during screeding, initial floating, or finishing operations is prohibited.

B. Float Finish: Begin the second floating operation when bleed-water sheen has disappeared and the concrete surface has stiffened sufficiently to permit operations. Float surface with power-driven floats, or by hand floating if area is small or inaccessible to power units. Finish surfaces to true planes. Cut down high spots, and fill low spots. Re-float surface immediately to uniform granular texture.
1. Medium-to-Coarse-Textured Broom Finish: Provide a coarse finish by striating float-finished concrete surface 1/16 to 1/8 inch (1.6 to 3 mm) deep with a stiff-bristled broom, perpendicular to line of traffic.

3.7 SPECIAL FINISHES

A. Refer to Architectural Plans for Special Finishes.

3.8 CONCRETE PROTECTION AND CURING

A. General: Protect freshly placed concrete from premature drying and excessive cold or hot temperatures. Comply with ACI 306.1 for cold-weather protection and follow recommendations in ACI 305R for hot-weather protection during curing.

B. Evaporation Retarder: Apply evaporation retarder to concrete surfaces if hot, dry, or windy conditions cause moisture loss approaching 0.2 lb/sq. ft. x h (1 kg/sq. m x h) before and during finishing operations. Apply according to Manufacturer's written instructions after placing, screeding, and bull floating or darbying concrete, but before float finishing.

C. Begin curing after finishing concrete, but not before free water has disappeared from concrete surface.

D. Curing Methods: Cure concrete by moisture curing, moisture-retaining-cover curing, curing compound, or a combination of these as follows:
   1. Moisture Curing: Keep surfaces continuously moist for not less than seven days with the following materials:
      a. Water
      b. Continuous water-fog spray
      c. Absorptive cover, water saturated, and kept continuously wet. Cover concrete surfaces and edges with 12-inch (300-mm) lap over adjacent absorptive covers.
   2. Moisture-Retaining-Cover Curing: Cover concrete surfaces with moisture-retaining cover for curing concrete, placed in widest practicable width, with sides and ends lapped at least 12 inches (300 mm), and sealed by waterproof tape or adhesive. Immediately repair any holes or tears during curing period using cover material and waterproof tape.
   3. Curing Compound: Apply uniformly in continuous operation by power spray or roller according to Manufacturer's written instructions. Recoat areas subjected to heavy rainfall within three hours after initial application. Maintain continuity of coating and repair damage during curing period.

3.9 FIELD QUALITY CONTROL

A. Testing Agency: Owner will engage a qualified independent testing and inspection agency to sample materials, perform tests, and submit test reports during concrete placement according to requirements specified in this Article.

B. Testing Services: Testing shall be performed according to the following requirements:
   1. Sampling Fresh Concrete: Representative samples of fresh concrete shall be obtained according to ASTM C 172, except modified for slump to comply with ASTM C 94.

2. Slump: ASTM C 143; one test at point of placement for each compressive-strength test, but not less than one test for each day's pour of each type of concrete. Additional tests will be required when concrete consistency changes.
3. Air Content: ASTM C 231, pressure method; one test for each compressive-strength test, but not less than one test for each day's pour of each type of air-entrained concrete.
4. Concrete Temperature: ASTM C 1064; one test hourly when air temperature is 40 deg F (4.4 deg C) and below and when 80 deg F (27 deg C) and above, and one test for each set of compressive-strength specimens.
5. Compression Test Specimens: ASTM C 31/C 31M; one set of four standard cylinders for each compressive-strength test, unless otherwise indicated. Cylinders shall be molded and stored for laboratory-cured test specimens unless field-cured test specimens are required.
6. Compressive-Strength Tests: ASTM C 39; one set for each day's pour of each concrete class exceeding 5 cu. yd. (4 cu. m), but less than 25 cu. yd. (19 cu. m), plus one set for each additional 50 cu. yd. (38 cu. m). One specimen shall be tested at 7 days and two specimens at 28 days; one specimen shall be retained in reserve for later testing if required.
7. When frequency of testing will provide fewer than five compressive-strength tests for a given class of concrete, testing shall be conducted from at least five randomly selected batches or from each batch if fewer than five are used.
8. When total quantity of a given class of concrete is less than 50 cu. yd. (38 cu. m), Architect may waive compressive-strength testing if adequate evidence of satisfactory strength is provided.
9. When strength of field-cured cylinders is less than 85 percent of companion laboratory-cured cylinders, current operations shall be evaluated and corrective procedures shall be provided for protecting and curing in-place concrete.
10. Strength level of concrete will be considered satisfactory if averages of sets of three consecutive compressive-strength test results equal or exceed specified compressive strength and no individual compressive-strength test result falls below specified compressive strength by more than 500 psi (3.4 MPa).

C. Test results shall be reported in writing to Architect, Concrete Manufacturer, and Contractor within 24 hours of testing. Reports of compressive-strength tests shall contain Project identification name and number, date of concrete placement, name of concrete testing agency, concrete type and class, location of concrete batch in pavement, design compressive strength at 28 days, concrete mix proportions and materials, compressive breaking strength, and type of break for both 7- and 28-day tests.

D. Nondestructive Testing: Impact hammer, sonoscope, or other nondestructive device may be permitted by Architect but will not be used as the sole basis for approval or rejection.

E. Additional Tests: Testing agency shall make additional tests of the concrete when test results indicate slump, air entrainment, concrete strengths, or other requirements have not been met, as directed by Architect. Testing agency may conduct tests to determine adequacy of concrete by cored cylinders complying with ASTM C 42, or by other methods as directed.

3.10 REPAIRS AND PROTECTION

A. Remove and replace concrete that is broken, damaged, or defective, or does not meet requirements in this Section.

B. Drill test cores where directed by Architect when necessary to determine magnitude of cracks or defective areas. Fill drilled core holes in satisfactory areas with Portland cement concrete bonded to with epoxy adhesive.

END OF SECTION

SECTION 02764

PAVEMENT JOINT SEALANTS

PART 1 - GENERAL

1.1 RELATED DOCUMENTS

A. Drawings and general provisions of the Contract, including General and Supplementary Conditions and Division 1 Specification Sections, apply to this Section.

1.2 SUMMARY

A. This Section includes the following:
   1. Expansion and contraction joints within Portland cement concrete pavement
   2. Joints between Portland cement concrete and asphalt pavement

B. Related Sections include the following:
   1. Division 2 Section "Hot-Mix Asphalt Paving" for constructing joints between concrete and asphalt pavement
   2. Division 2 Section “Cement Concrete “for constructing joints in concrete paving
   3. Division 7 Section "Joint Sealants" for sealing non-traffic and traffic joints in locations not specified in this Section

1.3 SUBMITTALS

A. Product Data: For each joint-sealant product indicated.

B. Product Certificates: For each type of joint sealant and accessory, signed by product Manufacturer.

C. Compatibility and Adhesion Test Reports: From sealant Manufacturer, indicating the following:
   1. Materials forming joint substrates and joint-sealant backings have been tested for compatibility and adhesion with joint sealants.
   2. Interpretation of test results and written recommendations for primers and substrate preparation needed for adhesion.

D. Product Test Reports: Based on evaluation of comprehensive tests performed by a qualified testing agency, for sealants.

1.4 QUALITY ASSURANCE

A. Installer Qualifications: An experienced Installer who has specialized in installing joint sealants similar in material, design, and extent to those indicated for this Project and whose work has resulted in joint-sealant installations with a record of successful in-service performance.

B. Source Limitations: Obtain each type of joint sealant through one source from a single Manufacturer.

1.5 DELIVERY, STORAGE, AND HANDLING

A. Deliver materials to Project site in original unopened containers or bundles with labels indicating Manufacturer, product name and designation, color, expiration date, pot life, curing time, and mixing instructions for multi-component materials.

B. Store and handle materials to comply with Manufacturer's written instructions to prevent their deterioration or damage due to moisture, high or low temperatures, contaminants, or other causes.

1.6 PROJECT CONDITIONS

A. Environmental Limitations: Do not proceed with installation of joint sealants under the following conditions:
1. When ambient and substrate temperature conditions are outside limits permitted by joint sealant Manufacturer
2. When ambient and substrate temperature conditions are outside limits permitted by joint sealant Manufacturer or are below 40 deg F (4.4 deg C)
3. When joint substrates are wet

B. Joint-Width Conditions: Do not proceed with installation of joint sealants where joint widths are less than that allowed by joint sealant Manufacturer for application indicated.

C. Joint-Substrate Conditions: Do not proceed with installation of joint sealants until contaminants capable of interfering with their adhesion are removed from joint substrates.

PART 2 - PRODUCTS

2.1 MATERIALS, GENERAL

A. Compatibility: Provide joint sealants, backing materials, and other related materials that are compatible with one another and with joint substrates under conditions of service and application, as demonstrated by joint sealant Manufacturer based on testing and field experience.

B. Colors of Exposed Joint Sealants: Match Architect's samples.

C. Colors of Exposed Joint Sealants: As indicated by referencing Manufacturer's designations.

D. Colors of Exposed Joint Sealants: As selected by Architect from Manufacturer's full range for this characteristic.

2.2 COLD-APPLIED JOINT SEALANTS

A. Type NS Silicone Sealant for Concrete: Single-component, low-modulus, neutral-curing, non-sag silicone sealant complying with ASTM D 5893 for Type NS.

B. Type SL Silicone Sealant for Concrete and Asphalt: Single-component, low-modulus, neutral-curing, self-leveling silicone sealant complying with ASTM D 5893 for Type SL.

C. Multi-component Low-Modulus Sealant for Concrete and Asphalt: Proprietary formulation consisting of reactive petropolymer and activator components producing a pourable, self-leveling sealant.

D. Available Products: Subject to compliance with requirements, cold-applied joint sealants that may be incorporated into the Work include, but are not limited to, the following:
   1. Type NS Silicone Sealant for Concrete:
      a. Roadsaver Silicone-SL; Crafco Inc.
      b. 888; Dow Corning
   2. Type SL Silicone Sealant for Concrete and Asphalt:
      a. 890-SL; Dow Corning
   3. Multi-component Low-Modulus Sealant for Concrete and Asphalt:
      a. SOF-SEAL; W.R. Meadows, Inc.

2.3 HOT-APPLIED JOINT SEALANTS

A. Elastomeric Sealant for Concrete: Single-component formulation complying with ASTM D 3406.

B. Sealant for Concrete and Asphalt: Single-component formulation complying with ASTM D 3405.

C. Available Products: Subject to compliance with requirements, hot-applied joint sealants that may be incorporated into the Work include, but are not limited to, the following:
   1. Elastomeric Sealant for Concrete:
      a. Superseal 444/777; Crafco, Inc.
      b. POLY-JET 3406; W.R. Meadows, Inc.
   2. Sealant for Concrete and Asphalt:
      a. ROADSAVER 221; Crafco Inc.
      b. Product #9005; Koch Materials Company
      c. Product #9030; Koch Materials Company
      d. SEALTIGHT HI-SPEC; W.R. Meadows, Inc.

2.4 JOINT-SEALANT BACKER MATERIALS

A. General: Provide joint-sealant backer materials that are non-staining; are compatible with joint substrates, sealants, primers, and other joint fillers; and are approved for applications indicated by joint sealant Manufacturer based on field experience and laboratory testing.

B. Round Backer Rod for Cold- and Hot-Applied Sealants: ASTM D 5249, Type 1, of diameter and density required to control sealant depths and prevent bottom-side adhesion of sealant.

C. Backer Strips for Cold- and Hot-Applied Sealants: ASTM D 5249; Type 2; of thickness and width required to control sealant depths, prevent bottom-side adhesion of sealant, and fill remainder of joint opening under sealant.

2.5 PRIMERS

A. Primers: Product recommended by joint sealant Manufacturer where required for adhesion of sealant to joint substrates indicated, as determined from preconstruction joint-sealant-substrate tests and field tests.

PART 3 - EXECUTION

3.1 EXAMINATION

A. Examine joints indicated to receive joint sealants, with Installer present, for compliance with requirements for joint configuration, installation tolerances, and other conditions affecting joint-sealant performance.

B. Proceed with installation only after unsatisfactory conditions have been corrected.

3.2 PREPARATION

A. Surface Cleaning of Joints: Clean out joints immediately before installing joint sealants to comply with joint sealant Manufacturer's written instructions.

B. Joint Priming: Prime joint substrates where indicated or where recommended in writing by joint sealant Manufacturer, based on preconstruction joint-sealant-substrate tests or prior experience. Apply primer to comply with joint sealant Manufacturer's written instructions. Confine primers to areas of joint-sealant bond; do not allow spillage or migration onto adjoining surfaces.

3.3 INSTALLATION OF JOINT SEALANTS

A. General: Comply with joint sealant Manufacturer's written installation instructions applicable to products and applications indicated, unless more stringent requirements apply.

B. Sealant Installation Standard: Comply with recommendations of ASTM C 1193 for use of joint sealants as applicable to materials, applications, and conditions indicated.

C. Install backer materials of type indicated to support sealants during application and at position required to produce cross-sectional shapes and depths of installed sealants relative to joint widths that allow optimum sealant movement capability.
   1. Do not leave gaps between ends of backer materials.
   2. Do not stretch, twist, puncture, or tear backer materials.
   3. Remove absorbent backer materials that have become wet before sealant application and replace them with dry materials.

D. Install sealants by proven techniques to comply with the following and at the same time backings are installed:
   1. Place sealants so they directly contact and fully wet joint substrates.
   2. Completely fill recesses provided for each joint configuration.
   3. Produce uniform, cross-sectional shapes and depths relative to joint widths that allow optimum sealant movement capability.

E. Tooling of Non-sag Sealants: Immediately after sealant application and before skinning or curing begins, tool sealants according to requirements specified below to form smooth, uniform beads of configuration indicated; to eliminate air pockets; and to ensure contact and adhesion of sealant with sides of joint.
   1. Remove excess sealants from surfaces adjacent to joint.
   2. Use tooling agents that are approved in writing by joint sealant Manufacturer and that do not discolor sealants or adjacent surfaces.

F. Provide joint configuration to comply with joint sealant Manufacturer's written instructions, unless otherwise indicated.

G. Provide recessed joint configuration for silicone sealants of recess depth and at locations indicated.

3.4 CLEANING

A. Clean off excess sealants or sealant smears adjacent to joints as the Work progresses by methods and with cleaning materials approved by Manufacturers of joint sealants and of products in which joints occur.

3.5 PROTECTION

A. Protect joint sealants during and after curing period from contact with contaminating substances and from damage resulting from construction operations or other causes so sealants are without deterioration or damage at time of Substantial Completion. If, despite such protection, damage or deterioration occurs, cut out and remove damaged or deteriorated joint sealants immediately so installations with repaired areas are indistinguishable from the original work.

END OF SECTION

SECTION 02780

DETECTABLE WARNING PAVERS

PART 1 - GENERAL

1.1 SUMMARY

A. Section Includes:
   1. Concrete pavers units
   2. Detectable warning pavers
   3. Sand bed and sand joint

B. Related Sections:
   1. Section 02923 - Landscape Grading: Preparation of subsoil for pavers.

1.2 REFERENCES

A. ASTM International:
   1. ASTM C33 - Standard Specification for Concrete Aggregates
   2. ASTM C144 - Standard Specification for Aggregate for Masonry Mortar
   3. ASTM C936 - Standard Specification for Solid Concrete Interlocking Paving Units

1.3 SYSTEM DESCRIPTION

A. Paving and Setting Bed: To accommodate pedestrian traffic.

1.4 SUBMITTALS

A. Section 01330 - Submittal Procedures: Requirements for submittals.

B. Shop Drawings: Indicate on shop drawings, layout of pavers, dimensions of paved areas, control joints, expansion joints, elevations, and affected adjacent construction.

C. Product Data: Submit characteristics of pavers unit, detectable warning pavers, dimensions, and special shapes.

D. Samples: Submit two samples of each Concrete pavers' size, illustrating style, size, color range and surface texture of units being provided.

E. Manufacturer's Installation Instructions: Submit substrate requirements and installation methods.

1.5 QUALIFICATIONS

A. Manufacturer: Company specializing in manufacturing Products specified in this section with minimum three years documented experience.

B. Installer: Company specializing in performing work of this section with minimum two years documented experience or approved by Manufacturer.

1.6 MOCKUP

A. Section 01400 - Quality Requirements: Requirements for mockup.

B. Construct mockup, 24 sq ft, including setting bed, pavers, joint sealers, control joint, expansion joint, and accessories to pattern indicated.

C. Locate where directed by Architect/Engineer.

D. Incorporate accepted mockup as part of Work.

1.7 EXTRA MATERIALS

A. Section 01700 - Execution Requirements: Spare parts and maintenance products.

B. Supply 10 of each pavers' size.

PART 2 - PRODUCTS

2.1 MANUFACTURERS

A. Manufacturers:
1. Belden Brick Model ADA Pavers
2. Pavestone Model Detectable Warning Pavers
3. ADA Solutions Inc. Model Cast-in-Place Composite Pavers Tiles
4. Substitutions: Section 01600 - Product Requirements

2.2 MATERIALS

A. Detectable Warning Pavers: Cast concrete with truncated domes Conforming to the following:
1. Type: ASTM C936, Hydraulically pressed concrete of 8,000 psi minimum, 28 day compressive strength
2. Air Entrained: 5 to 7 percent
3. Moisture Content: 7 percent
4. Moisture Absorption: 5 percent
5. Nominal Size: 3 7/8" x 7 13/16" x 2 3/8" inch
6. Style:
7. Color: Selected from Manufacturer's standard range
8. Shape: Rectangular

B. Sand for Setting Bed and Joint Filler: ASTM C144, clean washed river or bank sand.

C. Cast-In-Place Composite Pavers Tiles: In accordance with ADA Regulations for Detectable Warning on Curb Ramps. Raised truncated domes, Color and pattern as selected by Architect. The materials shall conform to the following specifications: Manufacturer ADA Solutions, Inc. Cast-In-Place Composite Pavers Tiles
   1. A homogenous glass and carbon reinforced composite which is colorfast and UV stable. The color of the tile is colored throughout and does not contain any type of paint coating to achieve the color.
   2. Strength: 20,000psi
   3. Slip resistance: exceeds 0.80 wet or dry

PART 3 - EXECUTION

3.1 EXAMINATION

A. Section 01300 - Administrative Requirements: Verification of existing conditions before starting work.

B. Verify that substrate is level or to correct gradient, smooth, capable of supporting pavers and imposed loads, and ready to receive Work of this section.

C. Verify gradients and elevations of substrate are correct.

3.2 PREPARATION

A. Treat soil with herbicide to retard plant growth.

3.3 INSTALLATION

A. Cast-In-Place Composite Pavers Tiles:
   1. Tile pavers units are to be used on new curb ramp locations. The panels can be pre-filled with concrete and set in place or pressed into place in the freshly poured concrete.

B. Detectable Warning Pavers:
   1. Excavate unsuitable, unstable or unconsolidated subgrade material and compact the area which is to receive the pave stones. Backfill, place and level the excavated area with a 4 inch minimum of a compacted structural base material.
   2. Spread sand evenly over prepared substrate surface to a maximum thickness of 1 ½ inches.
   3. Dampen and roller compact sand to level and even surface.
   4. Screed and scarify top 1/2 inch of sand.
   5. Place pavers units in parquet pattern, from straight reference edge. Place half units at edge and interruptions. Maintain tight and evenly spaced joints.
      a. Joint Width: 1/8 inches
   6. Sprinkle sand over surface and sweep into joints. Moisten joints and recover with additional sand until firm joints are achieved..
   7. Tamp pave stones with a plate compactor, uniformly level, true to grade and free of movement.

8. Spread sand to 1/8” thickness over entire paving area.
9. Make one more pass with plate compactor to fill joints with sand. Remove excess sand.

END OF SECTION

SECTION 02821

CHAIN LINK FENCES AND GATES

PART 1 - GENERAL

1.1 SUMMARY

A. Section Includes:
1. Fence framework, fabric, and accessories
2. Excavation for post bases
3. Concrete foundation for posts
4. Manual gates and related hardware
5. Privacy slats

B. Related Sections:
1. Division 2 – Site Work
2. Division 3 – Concrete

1.2 REFERENCES

A. ASTM International:
1. ASTM A121 - Standard Specification for Zinc-Coated (Galvanized) Steel Barbed Wire
2. ASTM A123/A123M - Standard Specification for Zinc (Hot-Dip Galvanized) Coatings on Iron and Steel Products
3. ASTM A153/A153M - Standard Specification for Zinc Coating (Hot-Dip) on Iron and Steel Hardware
4. ASTM A392 - Standard Specification for Zinc-Coated Steel Chain-Link Fence Fabric
5. ASTM C94 - Standard Specification for Ready-Mixed Concrete
6. ASTM F567 - Standard Practice for Installation of Chain-Link Fence
7. ASTM F900 - Standard Specification for Industrial and Commercial Swing Gates
8. ASTM F1083 - Standard Specification for Pipe, Steel, Hot-Dipped Zinc-Coated (Galvanized) Welded, for Fence Structures
9. ASTM F1184 - Standard Specification for Industrial and Commercial Horizontal Slide Gates

B. Chain Link Fence Manufacturers Institute:
1. CLFMI - Product Manual

1.3 PERFORMANCE REQUIREMENTS

A. Structural Performance: Provide chain-link fences and gates capable of withstanding the effects of gravity loads and the following loads and stresses within limits and under conditions indicated:

1. Minimum Post Size and Maximum Spacing for Wind Velocity Pressure: Determine based on mesh size and pattern specified, and on the following minimum design wind pressures and according to CLFMI WLG 2445:
   a. Consult a structural engineer experienced in design wind loads applicable to Project. Verify compliance with codes. See Evaluations.
   b. Wind Speed: 120 mph
   c. Fence Height: Six Feet
   d. Line Post Spacing: At intervals not exceeding 10 feet
   e. Line Post Group: IA, ASTM F 1043, Schedule 40 steel pipe
   f. Wind Exposure Category: C

B. Lightning Protection System: Maximum grounding-resistance value of 25 ohms under normal dry conditions.

1.4 SYSTEM DESCRIPTION

A. Fence Height: Six (6) feet nominal.

1.5 SUBMITTALS

A. Section 01330 - Submittal Procedures: Requirements for submittals.

B. Shop Drawings: Show locations of fences, gates, posts, rails, tension wires, details of extended posts, extension arms, gate swing, or other operation, hardware, and accessories. Indicate materials, dimensions, sizes, weights, and finishes of components. Include plans, gate elevations, sections, details of post anchorage, attachment, bracing, and other required installation and operational clearances.
   1. For installed products indicated to comply with design loads, include structural analysis data.

C. Samples for Verification: For each type of chain-link fence and gate indicated.

D. Qualification Data: For Installer.

E. Product Data: Submit data on gates, fabric, posts, accessories, fittings and hardware.

F. Samples: Submit two samples of gates, fence fabric, illustrating construction and finish.

G. Manufacturer's Installation Instructions: Submit installation requirements, post foundation anchor bolt templates, and maintenance manual.

1.6 CLOSEOUT SUBMITTALS

A. Section 01700 - Execution Requirements: Closeout procedures.

B. Project Record Documents: Accurately record actual locations of property perimeter posts relative to property lines and easements.

C. Operation and Maintenance Data: Procedures for submittals.

1.7 QUALITY ASSURANCE

A. Supply material in accordance with CLFMI - Product Manual.

B. Perform installation in accordance with ASTM F567.

C. Maintain one copy copies of each document on site.

D. Field Measurements: Verify layout information for chain-link fences and gates shown on Drawings in relation to property survey and existing structures. Verify dimensions by field measurements.

1.8 QUALIFICATIONS

A. Manufacturer: Company specializing in manufacturing Products specified in this section with minimum three years documented experience.

B. Installer: Installer Qualifications: An experienced Installer who has completed chain-link fences and gates similar in material, design, and extent to those indicated for this Project and whose work has resulted in construction with a record of successful in-service performance. Company specializing in performing work of this section with minimum three years documented experience and approved by Manufacturer.

1.9 DELIVERY, STORAGE AND HANDLING

A. Section 01600 - Product Requirements: Requirements for transporting, handling, storing, and protecting products.

B. Deliver fence fabric and accessories in packed cartons or firmly tied rolls.

C. Identify each package with Manufacturer’s name.

D. Store fence fabric and accessories in secure and dry place.

PART 2 - PRODUCTS

2.1 MANUFACTURERS

A. Manufacturers:
1. Master Halco
2. Merchants Metal
3. Substitutions: Section 01600 - Product Requirements

2.2 MATERIALS

A. Framing (Steel): ASTM F1083 Schedule 40 galvanized steel pipe, welded construction, minimum yield strength of 25 ksi; coating conforming to ASTM F1043 Type A on pipe exterior and interior.

B. Fabric Wire (Steel): ASTM A392 zinc coated wire fabric. Weight of Metallic (Zinc) Coating: ASTM A 392, Type II, Class 1, 1.2 oz./sq. ft. with zinc coating applied after weaving.

C. Barbed Wire: ASTM A121 galvanized steel; 12 gage thick wire, 3 strands, 4 points at 3" inch oc.

D. Concrete: ASTM C94; Normal Portland Cement, 3,000 psi strength at 28 days, 3 inch slump; nominal sized coarse aggregate.

2.3 COMPONENTS

A. Line Posts: 2.38 inch diameter.

B. Corner and Terminal Posts: 3.5 inch.

C. Gate Posts: 4.5 inch diameter.

D. Top and Brace Rail: 1.66 inch diameter, plain end, sleeve coupled.

E. Gate Frame: 1.66 inch diameter for welded and fittings and truss rod fabrication.

F. Fabric: 2 inch diamond mesh interwoven wire, 9 gage thick, barbed and barded, top salvage twisted tight, bottom selvage twisted tight.

G. Tension Wire: 6 gage thick steel, single strand.

H. Tension Band: thick steel.

I. Tension Strap: thick steel.

J. Tie Wire: According to ASTM F 626. Aluminum alloy steel wire.

2.4 ACCESSORIES

A. Caps: Cast steel galvanized; sized to post diameter, set screw retainer.
1. Line post caps with loop to receive tension wire or top rail.

B. Fittings: Sleeves, bands, clips, rail ends, tension bars, fasteners and fittings; galvanized steel.
1. Tension Bars: Steel, length not less than 2 inches shorter than full height of chain-link fabric. Provide one bar for each gate and end post, and two for each corner and pull post, unless fabric is integrally woven into post.
2. Truss Rod Assemblies: Steel, hot-dip galvanized after threading rod and turnbuckle or other means of adjustment.
3. Standard Round Wire Ties: For attaching chain-link fabric to posts, rails, and frames, complying with the following:
a. Hot-Dip Galvanized Steel: 0.148-inch- diameter wire; galvanized coating thickness matching coating thickness of chain-link fence fabric.

C. Extension Arms: Galvanized pressed steel, to accommodate 3 strands of barbed wire, single arm, sloped to 45 degrees. Barbed Wire Arms: Pressed steel or cast iron, with clips, slots, or other means for attaching strands of barbed wire, integral with post cap; for each post, unless otherwise indicated, and as follows:
1. Line posts with arms that accommodate top rail or tension wire.
2. Extended posts are indicated at fence corner posts, unless Corner arms are indicated and approved.
3. Type I, single slanted arm.

D. Gate Hardware: Center gate stop and drop rod, Mechanical keepers; three 180 degree gate hinges for each leaf and hardware for padlock keyed to match hardware specified in Section 08710. Hardware: Latches permitting operation from both sides of gate, hinges, center gate stops and keepers for each gate leaf more than 5 feet wide. Fabricate latches with integral eye openings for padlocking; padlock accessible from both sides of gate.

E. Barbed Wire: Zinc-Coated Steel Barbed Wire: Comply with ASTM A 121, Chain-Link Fence grade for the following three-strand barbed wire:
1. Standard Size and Construction: 0.099-inch- diameter line wire with 0.080-inch-diameter, 2-point round barbs spaced not more than 4 inches o.c.

F. Fence Grounding:
1. Conductors: Bare, solid wire for No. 6 AWG and smaller; stranded wire for No. 4 AWG and larger.
   a. Material above Finished Grade: Copper
   b. Material on or below Finished Grade: Copper
   c. Bonding Jumpers: Braided copper tape, 1 inch wide, woven of No. 30 AWG bare copper wire, terminated with copper ferrules
2. Connectors and Grounding Rods: Comply with UL 467.
   a. Connectors for Below-Grade Use: Exothermic welded type
   b. Grounding Rods: Copper-clad steel
      1) Size: 5/8 by 96 inches

2.5 GATES

A. General:
1. Gate Types, Opening Widths and Directions of Operation: As indicated on Drawings
2. Factory assemble gates
3. Design gates for operation by one person

B. Swing Gates:
1. Fabricate gates to permit 180 degree swing.
2. Gates Construction: ASTM F900 with welded corners. Use of corner fittings is not permitted.

C. Sliding Gates:
1. Framing and Posts: ASTM F1184, Classification: Type II Cantilever Slide, Class 1 with external roller assemblies.

2. Rollers for overhead and cantilever sliding gates: Bearing type. Furnish non-sealed bearings with grease fitting for periodic maintenance.
3. Secure rollers to post or frame without welding.

D. Cantilever Sliding Gates:

1. Fabricate gate leaf frames and tracks as required to meet performance requirements of ASTM F1184 and specified performance requirements.
2. Frame Members: galvanized steel tubing with outside dimensions and weight according to ASTM F 1184, welded assembly forming rigid, one piece unit.
3. Install fabric securely stretched and held in center of tubing.
4. Brace cantilever overhang frames with 3/8 inch brace rods. For gate leaf sizes greater than 23 feet, fabricate with additional lateral support rail welded adjacent to top and bottom horizontal rails.
5. Provide minimum overhang for each leaf opening size as per Manufacturers requirements:

Opening	Overhang
Up to 10’-0” (3.0 m)	6’-6” (2.0 m)
10’-0” -14’-0” (3.0 m - 4.3 m)	7’-6” (2.3 m)
14’-1” -22’-0” (4.4 m - 6.7 m)	10’-0” (3.0 m)
22’-1” - 30’-0” (6.8 - 9.1 m)	12’-0” (3.7 m)

6. Track and Rail: Combined, integral track and rail, galvanized steel with outside dimensions and weight according to ASTM F 1184.
7. Roller Track Assembly: As required per ASTM F 1184 for Type II, Class 1 gates. Two swivel type, zinc, die cast trucks having four, sealed lubricant ball bearing wheels minimum 2 inches diameter by 9/16 inches width designed for same reaction load as rail. Provide two side-rolling wheels for each gate leaf to maintain alignment of truck in track.
8. Fasten trucks to post brackets by minimum 7/8 inch (22 mm) diameter, 1/2 inch (13 mm) shank ball bolts.
9. Provide galvanized steel guide wheel assemblies consisting of two rubber wheels of minimum 4 inch (100 mm) diameter with oil-impregnated bearings for each supporting post.
10. Attach guide wheel assembly to post so bottom horizontal member rolls between wheels and permitting adjustment to maintain plumb gate frames and proper alignment.

2.6 FINISHES

A. Components and Fabric: Galvanized to ASTM A123/A123M; ASTM A153/A153M for components; ASTM A392 for fabric; 2.0 oz/sq ft coating.

B. Hardware: Galvanized to ASTM A153/A153M, 2.0 oz/sq ft coating.

C. Accessories: Same finish as framing.

PART 3 - EXECUTION

3.1 GENERAL INSTALLATION

A. Demolition: On the state's property and at the new fence, the Contractor shall clear an unobstructive area of 4' of the State's property line. The Contractor shall coordinate fence installation with the State and Owners representative.

B. Clearing and Grading: The Contractor shall do all clearing of brush, rocks and debris which may be necessary for the installation of fencing.

C. Stake Corners: The State will stake out the locations for corner posts and terminal posts in this installation. The fencing panels between corner and terminal posts shall generally follow the finished ground elevations. The Contractor shall grade off irregularities necessary to limit the variation of grade under the bottom of the fence to a distance no greater than 6" or less than 2".

D. The finished fence shall be plumb, taut, true to line and complete in every detail. All work shall be done by experienced workmen.

E. Excavated material from footings shall be spread neatly and uniformly to leave the area adjacent to the fence as slightly as possible.

3.2 INSTALLATION

A. Install framework, fabric, accessories and gates in accordance with ASTM F567.

B. Set intermediate, terminal, and gate posts plumb, in concrete footings with top of footing 1 ½" inches above finish grade. Slope top of concrete for water runoff.

C. Line Post Footing Depth Below Finish Grade: ASTM F567. Drill holes in firm, undisturbed or compacted soil. Holes shall have diameter 4 times greater than outside dimension of post, and depths approximately 6" deeper than post bottom. Excavate deeper as required for adequate support in soft and loose soils, and for posts with heavy lateral loads. Set post bottom 24" below surface when in firm, undisturbed soil. Place concrete around posts in a continuous pour. Trowel finish around post and slope to direct water away from posts.

D. Corner and Terminal Post Footing Depth Below Finish Grade: ASTM F567. Drill holes in firm, undisturbed or compacted soil. Holes shall have diameter 4 times greater than outside dimension of post, and depths approximately 6" deeper than post bottom. Excavate deeper as required for adequate support in soft and loose soils, and for posts with heavy lateral loads. Set post bottom 42" below surface when in firm, undisturbed soil. Place concrete around posts in a continuous pour. Trowel finish around post and slope to direct water away from posts.

E. Pull Post Spacing: Pull post shall be located not more than 500 feet apart and at each change in direction exceeding 20 degrees. Runs of fence over 500 feet but less than 1000 feet shall have a pull post centered in the run.

F. Gate Post Footing Depth Below Finish Grade: ASTM F567. Drill holes in firm, undisturbed or compacted soil. Holes shall have diameter 8 times greater than outside dimension of post, and depths approximately 6" deeper than post bottom. Excavate deeper as required for adequate support in soft and loose soils, and for posts with heavy lateral loads. Set post bottom 48" below surface when in firm, undisturbed soil. Place concrete around posts in a continuous pour. Trowel finish around post and slope to direct water away from posts.

G. Brace each gate and corner post to adjacent line post with horizontal center brace rail and diagonal truss rods. Maintaining plumb position and alignment of fencing. Install braces at end and gate posts and at both sides of corner and pull posts.
1. Locate horizontal braces at midheight of fabric 6 feet or higher, on fences with top rail and at 2/3 fabric height on fences without top rail. Install so posts are plumb when diagonal rod is under proper tension.

H. Top Rail: Maintaining plumb position and alignment of fencing. Run rail continuously through line post caps, bending to radius for curved runs and terminating into rail end attached to posts or post caps fabricated to receive rail at terminal posts. Provide expansion couplings as recommended in writing by fencing Manufacturer. Install top rail through line post tops and splice with 6 inch long rail sleeves.

I. Install center and bottom brace rail on corner gate leaves.

J. Place fabric on outside of posts and rails.

K. Do not stretch fabric until concrete foundation has cured 28 days.

L. Stretch fabric between terminal posts or at intervals of 100 feet maximum, whichever is less.

M. Position bottom of fabric 1 ½" inches above finished grade.

N. Fasten fabric to top rail, line posts, braces, and bottom tension wire with tie wire at maximum 15 inches on centers.

O. Attach fabric to end, corner, and gate posts with tension bars and tension bar clips.

P. Tension Wire: Maintaining plumb position and alignment of fencing. Pull wire taut, without sags. Fasten fabric to tension wire with 0.120-inch- diameter hog rings of same material and finish as fabric wire, spaced a maximum of 24 inches o.c. Install tension wire in locations indicated before stretching fabric.
1. Bottom Tension Wire: Install tension wire within 6 inches of bottom of fabric and tie to each post with not less than same diameter and type of wire.

Q. Install support arms sloped outward and attach barbed wire; tension and secure.

R. Support gates from gate posts. Do not attach hinged side of gate from building wall.

S. Install gate with fabric and barbed wire overhang to match fence. Install three hinges on each gate leaf, latch, catches, foot bolts and sockets, torsion spring retainer, retainer and locking clamp.

T. Provide concrete center drop to footing depth and drop rod retainers at center of double gate openings.

U. Connect to existing fence at new terminal post.

V. Install posts with 4 inches maximum clear opening from end posts to buildings, fences and other structures.

W. Center and align posts. Place concrete around posts, and vibrate for consolidation. Verify vertical and top alignment of posts and make necessary corrections.

X. Extend concrete footings 1 inches above grade, and trowel, forming crown to shed water.

Y. Allow footings to cure minimum 7 days before installing fabric and other materials attached to posts.

Z. Fasteners: Install nuts for tension bands and carriage bolts on the side of the fence opposite the fabric side. Peen ends of bolts or score threads to prevent removal of nuts.

AA. Barbed Wire: Install barbed wire uniformly spaced, angled toward security side of fence. Pull wire taut and install securely to extension arms and secure to end post or terminal arms.

3.3 GATE INSTALLATION

A. Install gates according to Manufacturer's written instructions, level, plumb, and secure for full opening without interference. Attach fabric as for fencing. Attach hardware using tamper-resistant or concealed means. Install ground-set items in concrete for anchorage. Adjust hardware for smooth operation and lubricate where necessary.

3.4 GROUNDING AND BONDING

A. Fence Grounding: Install at maximum intervals of 1500 feet except as follows:
   1. Fences within 100 Feet of Buildings, Structures, Walkways, and Roadways: Ground at maximum intervals of 750 feet.
      a. Gates and Other Fence Openings: Ground fence on each side of opening.
         1) Bond metal gates to gate posts.
         2) Bond across openings, with and without gates, except openings indicated as intentional fence discontinuities. Use No. 2 AWG wire and bury it at least 18 inches below finished grade.

B. Protection at Crossings of Overhead Electrical Power Lines: Ground fence at location of crossing and at a maximum distance of 150 feet on each side of crossing.

C. Fences Enclosing Electrical Power Distribution Equipment: Ground as required by IEEE C2, unless otherwise indicated.

D. Grounding Method: At each grounding location, drive a grounding rod vertically until the top is 6 inches below finished grade. Connect rod to fence with No. 6 AWG conductor. Connect conductor to each fence component at the grounding location, including the following:
   1. Each Barbed Wire Strand. Make grounding connections to barbed wire with wire-to-wire connectors designed for this purpose.

E. Bonding Method for Gates: Connect bonding jumper between gate post and gate frame.

F. Connections: Make connections so possibility of galvanic action or electrolysis is minimized. Select connectors, connection hardware, conductors, and connection methods so metals in direct contact will be galvanically compatible.
   1. Use electroplated or hot-tin-coated materials to ensure high conductivity and to make contact points closer in order of galvanic series.
   2. Make connections with clean, bare metal at points of contact.
   3. Coat and seal connections having dissimilar metals with inert material to prevent future penetration of moisture to contact surfaces.

G. Bonding to Lightning Protection System: If fence terminates at lightning-protected building or structure, ground the fence and bond the fence grounding conductor to lightning protection down conductor or lightning protection grounding conductor complying with NFPA 780.

3.5 ADJUSTING

A. Gate: Adjust gate to operate smoothly, easily, and quietly, free of binding, warp, excessive deflection, distortion, nonalignment, misplacement, disruption, or malfunction, throughout entire operational range. Confirm that latches and locks engage accurately and securely without forcing or binding.

B. Lubricate hardware and other moving parts.

3.6 ERECTION TOLERANCES

A. Section 01400 - Quality Requirements: Tolerances.

B. Maximum Variation From Plumb: ¼ inch.

C. Maximum Offset From Indicated Position: 1 inch.

D. Minimum distance from property line: 12 inches.

END OF SECTION

SECTION 03100

CONCRETE FORMS AND ACCESSORIES

PART 1 - GENERAL

1.1 SUMMARY

A. Section Includes:
1. Formwork for cast-in place concrete
2. Shoring, bracing, and anchorage
3. Form accessories
4. Form stripping

B. Related Sections:
1. Section 03200 - Concrete Reinforcement
2. Section 03300 - Cast-in-Place Concrete
3. Section 04810 - Unit Masonry Assemblies: Product requirements for masonry accessories for placement by this Section
4. Section 05500 - Metal Fabrications: Product requirements for metal fabrications for placement by this Section

1.2 REFERENCES

A. American Concrete Institute:
1. ACI 117 - Standard Specifications for Tolerances for Concrete Construction and Materials
2. ACI 301 - Specifications for Structural Concrete
3. ACI 318 - Building Code Requirements for Structural Concrete
4. ACI 347 - Guide to Formwork for Concrete

B. ASTM International:
1. ASTM D1751 - Standard Specification for Preformed Expansion Joint Filler for Concrete Paving and Structural Construction (Nonextruding and Resilient Bituminous Types)

1.3 DESIGN REQUIREMENTS

A. Design, engineer and construct formwork, shoring and bracing to conform to design and code requirements to achieve concrete shape, line and dimension.

1.4 SUBMITTALS

A. Section 01330 - Submittal Procedures: Requirements for submittals.

B. Shop Drawings:
1. Submit formwork and shoring shop drawings.
2. Indicate the following:

a. Pertinent dimensions, openings, methods of construction, types of connections, materials, joint arrangement and details, ties and shores, location of framing, studding and bracing, and temporary supports.
b. Means of leakage prevention for concrete exposed to view in finished construction.
c. Sequence and timing of erection and stripping assumed compressive strength at time of stripping, height of lift and height of drop during placement.
d. Vertical, horizontal and special loads in accordance with ACI 347, Section 2.2 and camber diagrams, when applicable.
e. Notes to formwork erector showing size and location of conduits and piping embedded in concrete in accordance with ACI 318, Section 6.3.

C. Product Data: Submit data on void form materials and installation requirements.
1. Submit Manufacturer's product data and installation instruction for proprietary materials used in exposed concrete work including form liners, release agents, form systems, ties and accessories.

D. Design Data: Indicate design data for formwork.

1.5 QUALITY ASSURANCE

A. Perform Work in accordance with ACI 347, ACI 301, ACI 117, and ACI SP-4.

B. For wood products furnished for work of this Section, comply with AF&PA.

C. Maintain one copy of each document on site.

1.6 COORDINATION

A. Section 01300 - Administrative Requirements: Coordination and project conditions.

B. Coordinate this Section with other sections of work, requiring attachment of components to formwork.

PART 2 - PRODUCTS

2.1 WOOD FORM MATERIALS

A. Form Materials: At discretion of Contractor.

B. Forms for Unexposed Concrete:
1. Construct formwork of plywood, lumber, metal, or other acceptable material. Lumber shall be dressed on at least two edges and one side for tight fit.

C. Forms for Exposed Concrete:
1. Construct formwork with plywood, metal, or other panel type materials designed to provide continuous straight and smooth as-cast surfaces with minimum

number of joints. Joints shall be made tight and shall be backed so that edges of adjoining formwork remain flush. Joints shall be vertical or horizontal, unless noted otherwise.

2. Wood forms shall be constructed of 3/4 inch, APA B-B Plyform, Class 1, Exterior conforming to PS-1. Panels shall be mill oiled and all edges shall be sealed.

2.2 FORMWORK ACCESSORIES

A. Form Ties: Removable or Snap-off type, galvanized metal, cone type, with waterproofing washer, 1 inch back break dimension, free of defects capable of leaving holes larger than 1 inch in concrete surface.

B. Spreaders: Standard, non-corrosive metal form clamp assembly, of type acting as spreaders and leaving no metal within 1 inch of concrete face. Wire ties, wood spreaders or through bolts are not permitted.

C. Form Release Agent: Colorless material that will not stain concrete, or absorb moisture, or impair natural bonding or color characteristics of coating intended for use on concrete.

D. Corners: Chamfer, ¾ x ¾ inch size; maximum possible lengths.

E. Vapor Retarder: See Section 07260.

F. Bituminous Joint Filler: ASTM D1751.

G. Nails, Spikes, Lag Bolts, Through Bolts, Anchorages: Size, strength and character to maintain formwork in place while placing concrete.

H. Sleeves and Blockouts: Formed with galvanized metal, galvanized pipe, polyvinyl chloride pipe, or fiber tubes.

PART 3 - EXECUTION

3.1 EXAMINATION

A. Section 01300 - Administrative Requirements: Coordination and project conditions.

B. Verify lines, levels, and centers before proceeding with formwork. Verify dimensions agree with Drawings.

3.2 INSTALLATION

A. The design, construction, and safety of all form work shall be the responsibility of the general Contractor. All forms, shores, back shores, falsework, bracing, and other temporary supports shall be engineered to support all loads imposed including the wet weight of concrete, construction equipment, live loads, lateral loads due to wind and

wet unbalanced concrete. The Contractor shall also be responsible for determining when temporary supports, shores, backshoring, and other bracing shall be safely removed

B. Earth Forms:
1. Earth forms are not acceptable at exposed concrete surfaces.
2. Trench earth forms neatly, accurately, and at least 2 inches wider than footing widths indicated on Drawings.
3. Trim sides and bottom of earth forms.
4. Construct wood edge strips at top of each side of trench to secure reinforcing and prevent trench from sloughing.
5. Form sides of footings where earth sloughs.
6. Tamp earth forms firm and clean forms of debris and loose material before depositing concrete.

C. Formwork - General:
1. Construct forms to correct shape and dimensions, mortar-tight, braced, and of sufficient strength to maintain shape and position under imposed loads from construction operations.
2. Carefully verify horizontal and vertical positions of forms. Correct misaligned or misplaced forms before placing concrete.

D. Erect formwork, shoring, and bracing to achieve design requirements, in accordance with requirements of ACI 301.

E. Arrange and assemble formwork to permit dismantling and stripping. Do not damage concrete during stripping. Permit removal of remaining principal shores.

F. Install chamfer strips on external corners.

G. Install void forms in accordance with Manufacturer's recommendations.

H. Reuse of Forms:
1. Clean and repair surfaces of forms to be reused. Damaged forming material shall not be replaced and shall not be used in construction.
2. Apply form release agent to concrete contact surfaces prior to each reuse of the forms.

3.3 APPLICATION - FORM RELEASE AGENT

A. Apply form release agent on formwork in accordance with Manufacturer's recommendations.

B. Apply prior to placement of reinforcing steel, anchoring devices, and embedded items.

C. Do not apply form release agent where concrete surfaces are indicated to receive special finishes or applied coverings that are affected by agent. Soak inside surfaces of untreated forms with clean water. Keep surfaces coated prior to placement of concrete.

D. Reuse and Coating of Forms: Thoroughly clean forms and reapply form coating before each reuse. For exposed work, do not reuse forms with damaged faces or edges. Apply form coating to forms in accordance with Manufacturer's specifications. Apply form coatings before placing reinforcing steel.

3.4 INSTALLATION - INSERTS, EMBEDDED PARTS, AND OPENINGS

A. Install formed openings for items to be embedded in or passing through concrete work.

B. Locate and set in place items required to be cast directly into concrete.

C. Coordinate with Work of other sections in forming and placing openings, slots, reglets, recesses, sleeves, bolts, anchors, other inserts, and components of other Work.

D. Position recessed reglets for brick veneer masonry anchors in accordance with spacing and intervals.

E. Install accessories straight, level, and plumb. Ensure items are not disturbed during concrete placement.

F. Provide temporary ports or openings in formwork where required to facilitate cleaning and inspection. Locate openings at bottom of forms to allow flushing water to drain.

G. Close temporary openings with tight fitting panels, flush with inside face of forms, and neatly fitted so joints will not be apparent in exposed concrete surfaces.

H. Form Ties:
1. Use sufficient strength and sufficient quantity to prevent spreading of forms.
2. Place ties at least 1 inch away from finished surface of concrete.
3. Leave inner rods in concrete when forms are stripped.
4. Space form ties equidistant, symmetrical and aligned vertically and horizontally unless otherwise shown on Drawings.

I. Arrangement: Arrange formwork to allow proper erection sequence and to permit form removal without damage to concrete.

J. Embedded Items:
1. Make provisions for pipes, sleeves, anchors, inserts, reglets, anchor slots, nailers, water stops, and other features.
2. Do not embed wood or uncoated aluminum in concrete.
3. Obtain installation and setting information for embedded items furnished under other Specification sections.
4. Securely anchor embedded items in correct location and alignment prior to placing concrete.
5. Verify conduits and pipes, including those made of coated aluminum, meet requirements of ACI 318, Section 6.3.

K. Openings for Items Passing Through Concrete:

1. Frame openings in concrete where indicated on Drawings. Establish exact locations, sizes, and other conditions required for openings and attachment of work specified under other sections.
2. Coordinate work to avoid cutting and patching of concrete after placement.
3. Perform cutting and repairing of concrete required as result of failure to provide required openings.

L. Screeds:
1. Set screeds and establish levels for tops of concrete slabs and levels for finish on slabs.
2. Slope slabs to drain where required or as shown on Drawings.
3. Before depositing concrete, remove debris from space to be occupied by concrete and thoroughly wet forms. Remove freestanding water.

3.5 FORM CLEANING

A. Clean forms as erection proceeds, to remove foreign matter within forms.

B. Clean formed cavities of debris prior to placing concrete.

C. Flush with water or use compressed air to remove remaining foreign matter. Ensure that water and debris drain to exterior through clean-out ports.

3.6 FORM REMOVAL

A. Do not remove forms or bracing until concrete has gained sufficient strength to carry its own weight and imposed loads and removal has been approved by Architect/Engineer.

B. Loosen forms carefully. Do not wedge pry bars, hammers, or tools against finish concrete surfaces scheduled for exposure to view.

C. Store removed forms in manner that surfaces to be in contact with fresh concrete will not be damaged. Discard damaged forms.

D. Leave forms in place for minimum number of days as specified in ACI 347.

3.7 ERECTION TOLERANCES

A. Construct formwork to maintain tolerances required by ACI 301.

B. Tolerances: Construct formwork to produce completed concrete surfaces within construction tolerances specified in ACI 117.
1. Level alignment:
   a. Elevation of slabs-on-grade – less than ¾ inch
   b. Elevation of top surfaces of formed slabs before removal of shores – less than ¾ inch
   c. Elevation of formed surfaces before removal of shores – less than ¾ inch

d. Lintels, sills, parapets, horizontal grooves, and other lines exposed to view - 1/2 inch

3.8 FIELD QUALITY CONTROL

A. Section 01400 - Quality Requirements and 01700 - Execution Requirements: Field inspecting, testing, adjusting, and balancing.

B. Inspect erected formwork, shoring, and bracing to ensure that work is in accordance with formwork design, and that supports, fastenings, wedges, ties, and items are secure.

C. Notify Architect/Engineer after placement of reinforcing steel in forms, but prior to placing concrete.

D. Schedule concrete placement to permit formwork inspection before placing concrete.

END OF SECTION

SECTION 03200

CONCRETE REINFORCEMENT

PART 1 - GENERAL

1.1 SUMMARY

A. Section includes:
   1. Reinforcing bars
   2. Welded wire fabric
   3. Reinforcement accessories

B. Related Sections:
   1. Section 03100 - Concrete Forms and Accessories
   2. Section 03300 - Cast-in-Place Concrete

1.2 REFERENCES

A. American Concrete Institute:
   1. ACI 301 - Specifications for Structural Concrete
   2. ACI 318 - Building Code Requirements for Structural Concrete
   3. ACI SP-66 - ACI Detailing Manual

B. ASTM International:
   1. ASTM A184/A184M - Standard Specification for Fabricated Deformed Steel Bar Mats for Concrete Reinforcement
   2. ASTM A497 - Standard Specification for Steel Welded Wire Fabric, Deformed, for Concrete Reinforcement
   3. ASTM A615/A615M - Standard Specification for Deformed and Plain Billet-Steel Bars for Concrete Reinforcement
   4. ASTM A706/A706M - Standard Specification for Low-Alloy Steel Deformed and Plain Bars for Concrete Reinforcement. Reinforcing bars to be welded

C. American Welding Society:
   1. AWS D1.4 - Structural Welding Code - Reinforcing Steel

D. Concrete Reinforcing Steel Institute:
   1. CRSI 63 - Manual of Standard Practice
   2. CRSI 65 - Placing Reinforcing Bars

1.3 SUBMITTALS

A. Section 01330 - Submittal Procedures: Submittal procedures.

B. Shop Drawings: Indicate bar sizes, spacings, locations, and quantities of reinforcing steel and welded wire fabric, bending and cutting schedules, and supporting and spacing devices.

C. Certificates: Submit AWS qualification certificate for welders employed on the Work.

D. Manufacturer's Certificate: Certify Products meet or exceed specified requirements.

E. Submit certified copies of mill test report of reinforcement materials analysis.

1.4 QUALITY ASSURANCE

A. Perform Work in accordance with CRSI - Manual of Standard Practice.

B. Maintain one copy of each document on site.

1.5 QUALIFICATIONS

A. Welders: AWS qualified within previous 12 months.

1.6 DELIVERY, STORAGE, AND HANDLING

A. Section 01600 - Product Requirements: Product storage and handling requirements.

B. Accept metal fabrications on site in labeled shipments. Inspect for damage.

C. Protect metal fabrications from damage by exposure to weather.

1.7 COORDINATION

A. Section 01300 - Administrative Requirements: Coordination and project conditions.

B. Coordinate with placement of formwork, formed openings and other Work.

PART 2 - PRODUCTS

2.1 REINFORCEMENT

A. Reinforcing Steel: ASTM A615, 60 ksi yield grade; deformed billet steel bars, galvanized in accordance with ASTM A767/A767M, Class II epoxy coated in accordance with ASTM A775/A775M finish.

B. Reinforcing Steel Plain Bar and Rod Mats: ASTM A704/A704M, ASTM A615/A615M, Grade 60; steel bars or rods, unfinished.

C. Stirrups Steel: ASTM A82, galvanized in accordance with ASTM A641/A641M finish.

D. Welded Steel Wire Fabric: ASTM A497 Deformed Type; in flat sheets; plain finish.

2.2 ACCESSORY MATERIALS

A. Tie Wire: Minimum 16 gage annealed type.

B. Chairs, Bolsters, Bar Supports, and Spacers: Sized and shaped for strength and support of reinforcement during concrete placement conditions including load bearing pad on bottom to prevent vapor retarder puncture.

C. Special Chairs, Bolsters, Bar Supports, Spacers Adjacent to Weather Exposed Concrete Surfaces: Plastic-coated steel or Stainless steel type; size and shape to meet Project conditions.

2.3 FABRICATION

A. Fabricate concrete reinforcement in accordance with CRSI Manual of Practice.

B. Weld reinforcement in accordance with AWS D1.4

C. Reinforcement: Clean surfaces, weld and re-protect welded joint in accordance with CRSI.

D. Locate reinforcement splices, at point of minimum stress.

2.4 FABRICATION OF EMBEDDED METAL ASSEMBLIES

A. Fabricate metal assemblies in the shop. Holes shall be made by drilling or punching. Holes shall not be made by or enlarged by burning. Welding shall be in accordance with AWS D1.1.

B. Welding of deformed bar anchors and headed stud anchors shall be done by full fusion process equal to that of TRW Nelson Stud Welding Division. A minimum of two headed studs shall be tested at the start of each production period for proper quality control. The studs shall be capable of being bent 45 degrees without failure.

C. Welding of reinforcement shall be done in accordance with AWS D1.4, using the recommended preheat temperature and electrode for the type of reinforcement being welded. Bars larger than no. 9 shall not be welded. Welding shall be subject to the observance and testing of the Testing Laboratory.

D. Metal assemblies shall be hot dip galvanized. Repair galvanizing after welding with a Cold Galvanizing compound installed in accordance with the Manufacturer's instructions.

PART 3 - EXECUTION

3.1 PLACEMENT

A. Place, support and secure reinforcement against displacement. Do not deviate from required position.

B. Do not displace or damage vapor retarder.

C. Accommodate placement of formed openings.

D. Maintain concrete cover around reinforcement as follows: as noted on Structural Drawings.

E. Conform to applicable code for concrete cover over reinforcement.

F. Before placing concrete, clean reinforcement to remove soil, loose rust, mill scale, ice, or other materials which reduce bond with concrete.

G. Accurately position reinforcement and secure reinforcement against displacement by construction or concrete placement operations.

H. Place reinforcement to obtain minimum concrete cover specified. Tie bars and bar supports together with tie wire to hold reinforcement in position. Set tie wires so that the twisted ends are directed away from exposed concrete surfaces.

I. Installation tolerances:
   1. Top and Bottom bars in slabs, girders, beams and joists
      a. Members 8” deep or less +/-3/8”
      b. Members more than 8" deep: "1/2"
   2. Concrete Cover to Formed or Finished Surfaces: "3/8" for members 8" deep or less; 1/2" for members over 8" deep, except that tolerance for cover shall not exceed 1/3 of the specified cover.

J. Concrete Cover: Refer to the Structural Notes on Drawings.

K. Welded Wire Fabric: Lap adjoining pieces at least one full mesh and lace splices with tie wire.

L. Splices: Refer to the Structural Notes on Drawings. Provide standard reinforcement splices by lapping and tying ends. Comply with ACI 318 for minimum lap of spliced bars where not specified on the documents.

M. Welding of Reinforcing Steel: Comply with the requirements of AWS D1.4 for field welding. Only steel conforming to ASTM A706 may be welded.

N. Field Welding of Embedded Metal Assemblies: All paint and galvanizing shall be removed in areas to receive field welds. All areas where paint or galvanizing has been removed shall be field repaired with the specified paint or cold galvanizing compound, respectively.

O. Bond and ground reinforcement in accordance with requirements of Section 16060.

3.2 FIELD QUALITY CONTROL

A. Section 01400 - Quality Requirements: Testing and Inspection Services and 01700 - Execution Requirements: Testing and adjusting etc.

END OF SECTION

SECTION 03300

CAST-IN-PLACE CONCRETE

PART 1 - GENERAL

1.1 SUMMARY

A. Section includes cast-in-place concrete for the following:
1. Foundation walls
2. Slabs on grade
3. Control, expansion and contraction joint devices
4. Equipment pads
5. Light pole base
6. Flagpole base
7. Manholes

B. Related Sections:
1. Section 03100 - Concrete Forms and Accessories: Formwork and accessories
2. Section 03200 - Concrete Reinforcement
3. Section 07900 - Joint Sealers

1.2 REFERENCES

A. American Concrete Institute:
1. ACI 301 - Specifications for Structural Concrete
2. ACI 304 – Guide for Measuring, Mixing, Transporting and Placing Concrete
3. ACI 305 - Hot Weather Concreting
4. ACI 305 - Hot Weather Concreting
5. ACI 306 - Cold Weather Concreting
6. ACI 308 - Standard Practice for Curing Concrete
7. ACI 309 - Recommended Practice for Consolidation of Concrete
8. ACI 306.1 - Standard Specification for Cold Weather Concreting
9. ACI 318 - Building Code Requirements for Structural Concrete

B. ASTM International:
1. ASTM C33 - Standard Specification for Concrete Aggregates
2. ASTM C94 - Standard Specification for Ready-Mixed Concrete
3. ASTM C150 - Standard Specification for Portland Cement
4. ASTM C260 - Standard Specification for Air-Entraining Admixtures for Concrete
5. ASTM C330 - Standard Specification for Lightweight Aggregates for Structural Concrete
6. ASTM C494 - Standard Specification for Chemical Admixtures for Concrete
7. ASTM C595 - Standard Specification for Blended Hydraulic Cements
8. ASTM C618 - Standard Specification for Coal Fly Ash and Raw or Calcined Natural Pozzolan for Use as a Mineral Admixture in Portland Cement Concrete

9. ASTM C1017 - Standard Specification for Chemical Admixtures for Use in Producing Flowing Concrete
10. ASTM D1752 - Standard Specification for Preformed Sponge Rubber and Cork Expansion Joint Fillers for Concrete Paving and Structural Construction
11. ASTM E1643 - Standard Practice for Installation of Water Vapor Retarders Used in Contact with Earth or Granular Fill under Concrete Slabs
12. ASTM E1745 - Standard Specification for Plastic Water Vapor Retarders Used in Contact with Soil or Granular Fill under Concrete Slabs

1.3 SUBMITTALS

A. Section 01330 - Submittal Procedures: Submittal procedures.

B. Product Data: Submit data on joint devices, attachment accessories, and admixtures.

C. Design Data:
1. Submit concrete mix design for each concrete strength. Submit separate mix designs when admixtures are required for the following:
   a. Hot and cold weather concrete work
   b. Air entrained concrete work
2. Identify mix ingredients and proportions, including admixtures.
3. Submit proposed mix designs prepared in accordance with ACI 301, Chapter 3.9. Each proposed mix design shall be accompanied by a complete standard deviation analysis based on at least 30 consecutive strength tests, or by three laboratory trial mixtures with confirmation tests.

D. Construction Joints: Submit a diagram of proposed construction joints other than those indicated on the Drawings.

E. Fly ash: Submit certification attesting to carbon content and compliance with ASTM C618.

F. Manufacturer's Installation Instructions: Submit installation procedures and interface required with adjacent Work.

1.4 CLOSEOUT SUBMITTALS

A. Section 01700 - Execution Requirements: Closeout procedures.

B. Project Record Documents: Accurately record actual locations of embedded utilities and components concealed from view in finished construction.

1.5 QUALITY ASSURANCE

A. Perform Work in accordance with ACI 301.

B. Comply with governing codes and regulations. Provide products of acceptable Manufacturers that have been in satisfactory use in similar service for three years. Use

experienced Installers. Deliver, handle, and store materials in accordance with Manufacturer's instructions.

C. Testing: Employ an independent testing agency acceptable to Owner to design concrete mixes and to perform material evaluation tests. Provide 7 and 28 day cylinder tests. Comply with ASTM C 143, C 173, C 31 and C 39.

D. Maintain one copy of each document on site.

E. Acquire cement and aggregate from one source for Work.

F. Conform to ACI 305 when concreting during hot weather.

G. Conform to ACI 306.1 when concreting during cold weather.

H. Testing: Independent Testing Laboratory
   1. Contractors responsibilities to testing laboratory:
      a. Furnish labor and materials as required to assist testing agency in obtaining, making and handling samples at the jobsite.
      b. Advise the testing agency sufficiently in advance of operations to allow testing agency adequate time for the assignment of testing personnel.
      c. Furnish and maintain adequate facilities for the proper curing of concrete test specimens on the project site in accordance with ASTM C31.

I. Evaluation and Acceptance:
   1. The strength level of the concrete will be considered satisfactory if the averages of all sets of three consecutive strength test results equal or exceed the specified strength and no individual test result (average of two cylinders) is below the specified strength by more than 500 psi.
   2. When the strength level of the concrete for any portion of the structure, as indicated by cylinder tests, falls below the specified requirements, the Contractor shall provide improved curing conditions and/or adjustments to the mix design as required to obtain the required strength. If the average strength of the laboratory control cylinders falls so low as to be deemed unacceptable, the Contractor shall follow the core test procedure set forth in ACI 301, Chapter 17. Locations of core tests shall be approved by the Architect. Core sampling and testing shall be at Contractors expense.
      a. If the results of the core tests indicate that the strength of the structure is inadequate, any replacement, load testing, or strengthening as may be ordered by the Architect / Engineer shall be provided by the Contractor without cost to the Owner.

1.6 CONCRETE MIX DESIGNS

A. Selection of Proportions: Proportions of ingredients for concrete mixes shall be determined by an Independent testing laboratory or qualified concrete supplier in accordance with the requirements of ACI 301, chapter 3. If testing laboratory provides concrete mix designs, it shall be selected by the Contractor, approved by the Architect, and paid by the Contractor.

B. Required average strength above specified strength: Determination of required average strength above specified strength shall be based on the standard deviation record of the production facility in accordance with ACI 301. Calculation of standard deviation of compressive strength results shall be made in accordance with ACI 214. If a suitable record of strength tests is not available, proportions shall be selected on the basis of laboratory trial batches to produce an average strength greater than the specified strength f'c by the amount defined in ACI 301, Table 3.9.2.2.

C. All concrete mix designs shall include the following information:
1. Proportions of cement, fine and coarse aggregates, and water
2. Maximum water/cement ratio, design strength, maximum slump, and air content
3. Type cement and aggregates
4. Type and quantities of all admixtures
5. Any special requirements for pumping
6. Any special characteristics of the mix which require precautions in the mixing, placing, or finishing techniques to achieve the finished product specified

1.7 COORDINATION

A. Section 01300 - Administrative Requirements: Coordination and project conditions.

B. Coordinate placement of joint devices with erection of concrete formwork and placement of form accessories.

PART 2 - PRODUCTS

2.1 CONCRETE MATERIALS

A. Cement: ASTM C150, Type I - Normal Portland type; ASTM C595.

B. Fine and Coarse Aggregates: ASTM C33.

C. Lightweight Aggregate: ASTM C330.

D. Fly ash conforming to ASTM C618 may be used in non-architecturally exposed concrete. Carbon content shall not exceed (3) three percent by volume.

E. Water: Clean and not detrimental to concrete.

2.2 ADMIXTURES

A. Do not use admixtures which have not been incorporated and tested in accepted mixes.
a. Calcium chloride admixtures are not permitted.
b. Thiocyanates and admixtures containing more than 0.05 percent chloride ions shall not be used in the concrete mix.

B. Air Entrainment: ASTM C260.

C. Set Controlling Admixtures: ASTM C494
   1. Type A - Water Reducing
   2. Type D - Water Reducing and Retarding
   3. Type E - Water Reducing and Accelerating
   4. Type F - Water Reducing, High Range Admixtures
   5. Type G - Water Reducing, High Range and Retarding Admixtures

D. Fly Ash: ASTM C618 Class F.

2.3 ACCESSORIES

A. Bonding Agent: Polyvinyl Acetate or Two component modified epoxy resin.

B. Vapor Retarder: See Section 07260 Vapor Retarders.

C. Curing Materials: Liquid Membrane-Forming Curing Compound: ASTM C 309, Type 1, Class A. or Water-Based Acrylic Membrane Curing Compound: ASTM C 309, Type 1, Class B. Material providing water retention not exceeding loss of 0.055 gm/cm2 in 72 hours when used at a coverage of 200 square feet per gallon and tested in accordance with ASTM C156.
   1. Curing compound shall conform to the requirements of ASTM C309. Curing compound used on exposed concrete shall be non-discoloring and shall not darken or yellow with age.
   2. Dissipating curing compound shall be liquid membrane forming compound complying with ASTM C309, which provides an initial cure for concrete, then begins to chemically break down and wear off the surface within 6 to 8 weeks. Acceptable products are: AKurez DR@ by the Euclid Chemical Company or approved equal.

D. Non-Shrink Grout: ASTM C1107, Grade B; premixed compound consisting of non-metallic aggregate, cement, water reducing and plasticizing agents; capable of developing minimum compressive strength of 2,400 psi in 48 hours and 7,000 psi in 28 days.

E. Epoxy Adhesive: Conforming to ASTM C881. "Euco Epoxy 452 or 620," by the Euclid Chemical Company, "Sikadur 32, Hi-Mod," by the Sika Corporation, or approved equal. The compound shall be a two component, 100 percent solids compound suitable for use on dry or damp surfaces.

F. Waterstops: Rubber or PVC water stops. At all construction joints below grade. "Synko-Flex" Preformed Plastic Waterstop by Synko-Flex Products, Inc., meeting the requirements of FS-SS-S-210A.

G. Evaporation retarder for hot weather curing Monomolecular film-forming compound shall be a spray applied liquid film "Confilm" by Master Builders, or approved equal.

H. Reglets: Galvanized sheet steel reglets, minimum 26 gage (.018 inch).

I. Vapor Barrier: Pre-molded membrane, ASTM E 96, Method B, 0-vapor transmission rate.

J. Non-slip Aggregate Finish: Fused aluminum oxide granules or crushed emery.

K. Underlayment Compound: Free-flowing, self-leveling cement-based compound.

2.4 CONCRETE MIX

A. Mix and deliver concrete in accordance with ASTM C94, Option C.

B. Provide concrete to the following criteria:

Unit	Measurement
Compressive Strength (28 day)	3,000 psi

1. Beams, Walls, Foundations, and Footings: 3000 psi
2. Slabs on Grade: 3000 psi
3. Paving Base: 3500 psi
4. Exterior Site Concrete and Pads Exposed to Weather: 3500 psi

C. Admixtures: Include admixture types and quantities indicated in concrete mix designs approved through submittal process.
1. Use accelerating admixtures in cold weather only when approved by Engineer / Architect. Use of admixtures will not relax cold weather placement requirements.
2. Calcium chloride is not permitted.
3. Use set retarding admixtures during hot weather only when approved by Engineer / Architect.
4. Add air entraining agent to normal weight concrete mix for work exposed to exterior.

PART 3 - EXECUTION

3.1 EXAMINATION

A. Section 01300 - Administrative Requirements: Coordination and project conditions.

B. Verify requirements for concrete cover over reinforcement.

C. Verify anchors, seats, plates, reinforcement and other items to be cast into concrete are accurately placed, positioned securely, and will not interfere with placing concrete.

3.2 PLACING CONCRETE

A. Concrete shall not be mixed for placing until the mix designs and corresponding strength tests for each class of concrete have been accepted by the Architect for use on the project.

B. Mix concrete in accordance with ASTM C94.

C. Place concrete in accordance with ACI 301 and ACI 304.

D. Notify Architect/Engineer minimum 48 hours prior to commencement of operations.

E. Ensure reinforcement, inserts, embedded parts, formed expansion and contraction joints, are not disturbed during concrete placement.

F. Install vapor retarder under interior slabs on grade in accordance with ASTM E1643. Lap joints minimum 6 inches and seal watertight by taping edges and ends.

G. Repair vapor barrier damaged during placement of concrete reinforcing. Repair with vapor barrier material; lap over damaged areas minimum 6 inches and seal watertight.

H. Anchor bolts: Install anchor bolts as shown on the approved shop drawings. Use templates to set anchor bolts and secure into position before placing concrete. Do not stab anchor bolts into concrete. Anchor bolts shall be placed within the following tolerances measured after concrete placement:

1. Spacing within a bolt group: 1/8"
2. Location of bolt group (center): 1/2"
3. Rotation of bolt group: 5 degrees
4. Angle off vertical: 5 degrees
5. Bolt projection: 3/8"

I. Pump priming grout shall be discarded and not used in the structure.

J. Do not permit concrete to drop freely any distance greater than 10'-0" for concrete containing a high range water reducing admixture (superplasticizer) or 5'-0" for other concrete. Provide chute or tremie to place concrete where longer drops are necessary. Do not place concrete into excavations with standing water. If place of deposit cannot be pumped dry, pour concrete through a tremie with its outlet near the bottom of the place of deposit.

K. Vibration: As soon as concrete is deposited vibrate concrete with mechanical vibrators. Do not over vibrate or use vibrators to transport concrete within forms. Insert and withdraw vibrators at regular intervals from 18" to 30" apart. At each insertion the duration shall not be sufficient to cause segregation, generally from 5 to 15 seconds duration. A spare vibrator shall be kept on the jobsite during all concrete placing operations.

L. Prepare previously placed concrete by cleaning with steel brush and applying water or bonding agent. Apply bonding agent in accordance with Manufacturer's instructions.

M. Construction Joints: Except as otherwise specifically indicated on the drawings, each concrete member shall be considered as a single unit, and all concrete for the same shall be placed continuously in order that such unit will be monolithic in construction. Should construction joints prove to be absolutely unavoidable, the joints shall be located at or near midspan of the beams, joists, or slabs. Additional construction joints must be submitted for review by the Architect.

N. Separate slabs on grade from vertical surfaces with joint filler.

O. Place joint filler in floor slab. Set top to required elevations. Secure to resist movement by wet concrete.

P. Apply sealants in joint devices in accordance with Section 07900.

Q. Maintain records of concrete placement. Record date, location, quantity, air temperature, and test samples taken.

R. Place concrete continuously between predetermined expansion, control, and construction joints.

S. Do not interrupt successive placement; do not permit cold joints to occur.

T. Control Joints: Provide sawn or tooled joints or removable insert strips; depth equal to 1/4 slab thickness. Spacing as required and approved.

U. Saw cut joints within 12 hours after placing. Use 3/16 inch thick blade, cut into 1/4 depth of slab thickness.

V. Screed slabs on grade level, maintaining surface flatness of maximum 1/8 inch in 10 ft.

W. Chamfer exposed edges/corners to provide straight lines.

X. Construction Joints: Use keyways, continue reinforcement through joint.

Y. Expansion Joints: For exterior works locate 30' o.c. at approved locations. Provide smooth dowels across joint which permit 1" horizontal movement and no vertical shear movement.

Z. Isolation Joints: Provide between slabs and vertical elements such as columns and structural walls.

AA. Mixing time: Unless otherwise approved by the laboratory inspector, discharge shall be completed within 90 minutes after the introduction of water to the cement.

3.3 CONCRETE FINISHING

A. Finish concrete floor surfaces to requirements of Section 03350.

B. Provide formed concrete surfaces to be left exposed with smooth rubbed finish as Scheduled in this section.
   1. Wall Finishes: As cast and patched for concealed work; rubbed smooth, filled and cement paste coated for exposed work.

C. Wood float surfaces receiving ceramic tile with full bed setting system.

D. Steel trowel surfaces receiving carpeting, resilient flooring, seamless flooring, thin set quarry tile, or thin set ceramic tile.

E. Steel trowel surfaces which are indicated to be exposed.

F. In areas with floor drains, maintain floor elevation at walls; pitch surfaces uniformly to drains at 1/8 inch per foot nominal and as indicated on drawings.

3.4 CURING AND PROTECTION

A. Immediately after placement, protect concrete from premature drying, excessively hot or cold temperatures, and mechanical injury.

B. Maintain concrete with minimal moisture loss at relatively constant temperature for period necessary for hydration of cement and hardening of concrete.

C. Cure floor surfaces in accordance with ACI 301.

D. Spraying: Spray water over floor slab areas and maintain wet for 7 days.

E. Cure and protect work. Report defective work in writing.

3.5 FIELD QUALITY CONTROL

A. Section 01400 - Quality Requirements: Testing and Inspection Services and 01700 - Execution Requirements: Testing, adjusting, and balancing.

B. Field inspection and testing will be performed in accordance with ACI 301 and under provisions of Section 01400.

C. Provide free access to Work and cooperate with appointed firm.

D. Submit proposed mix design of each class of concrete to Architect / Engineer and inspection and testing firm for review prior to commencement of Work. Do not change mix design with review and approval by Architect / Engineer.

E. Tests of cement and aggregates may be performed to ensure conformance with specified requirements.

F. Three concrete test cylinders will be taken for every 75 or less cu yds of each class of concrete placed.

G. One additional test cylinder will be taken during cold weather concreting, cured on job site under same conditions as concrete it represents.

H. One slump test will be taken for each set of test cylinders taken.

I. One air content test will be made for each set of test cylinders taken.

J. Maintain records of concrete placement. Record date, location, quantity, air temperature and test samples taken.

3.6 QUALITY CONTROL TESTING DURING CONSTRUCTION

A. General: The Contractor will employ a testing agency to perform tests and to submit test reports. Reference Section 01410 Testing Laboratory Services.

B. Sampling and testing for quality control during concrete placement may include the following, as directed by Architect.
   1. Sampling Fresh Concrete: ASTM C 172, except modified for slump to comply with ASTM C94.
   2. Slump: ASTM C 143: one test at point of discharge for each day's pour of each type of concrete; additional tests when concrete consistency seems to have changed.
   3. Air Content: ASTM C 173, volumetric method for lightweight or normal weight concrete; ASTM C 231, pressure method for normal weight concrete, one for each day's pour of each type of air-entrained concrete.
   4. Concrete Temperature: ASTM C 1064; one test hourly when air temperature is 40 deg. F (4 deg. C) and below, when 80 deg. F (27 deg. C) and above, and one test for each set of compressive-strength specimens.
   5. Compression Test Specimen: ASTM C 31; one set of four standard cylinders for each compressive-strength test, unless otherwise directed. Mold and store cylinders for laboratory0cured test specimens except when field-cured test specimens are required.
   6. Compressive-Strength Tests: ASTM C 39; one set for each day's pour exceeding 5 cubic yard plus additional sets for each 50 cubic yard more than the first 25 cubic yard of each concrete class placed in any one day; one specimen tested at 7 days, two specimens tested at 28 days, and one specimen retained in reserve for later testing if required.
      a. When frequency of testing will provide fewer than five strength tests for a given class of concrete, conduct testing from at least five randomly selected batches or from each batch if fewer than five are used.
      b. When total quantity of a given class of concrete is less than 50 cubic yards, Architect may waive strength testing if adequate evidence of satisfactory strength is provided.
      c. When strength of field-cured cylinders is less than 85% of companion laboratory-cured cylinders, evaluate current operations and provide corrective procedures for protecting and curing the in-place concrete.
      d. Strength level of concrete will be considered satisfactory if averages of sets of three consecutive strength test results equal or exceed specified compressive strength and no individual strength test result falls below specified compressive strength by more than 500 psi.

C. Test results will be reported in writing to Architect, Structural Engineer, ready-mix producer, and Contractor within 24 hours after tests. Reports of compressive strength tests shall contain the Project identification name and number, date of concrete placement, name of concrete testing service, concrete type and class, location of concrete batch in structure, design compressive strength at 28 days, concrete mix

proportions and materials, compressive breaking strength, and type for break for both 7-day tests and 28-day tests.

D. Non-destructive Testing: Impact hammer, sonoscope, or other non-destructive device may be permitted but shall not be used as the sole basis for acceptance or rejection.

E. Additional Tests: The testing agency will make additional tests of in-place concrete when test results indicate specified concrete strengths and other characteristics have not been attained in the structure, as directed by Architect. Testing agency may conduct tests to determine adequacy of concrete by cored cylinders complying with ASTM C 42, or by other method as directed.

3.7 PATCHING

A. Allow Architect/Engineer to inspect concrete surfaces immediately upon removal of forms.

B. Excessive honeycomb or embedded debris in concrete is not acceptable. Notify Architect/Engineer upon discovery.

C. Patch imperfections as directed by Architect / Engineer in accordance with ACI 301.

3.8 DEFECTIVE CONCRETE

A. Defective Concrete: Concrete not conforming to required lines, details, dimensions, tolerances or specified requirements.

B. Repair or replacement of defective concrete will be determined by Architect/Engineer.

C. Do not patch, fill, touch-up, repair, or replace exposed concrete except upon express direction of Architect / Engineer for each individual area.

3.9 CONCRETE SURFACE REPAIRS

A. General: Provide exposed-to-view concrete formed surfaces of such quality as to require a minimum of pointing. Exercise care in the forming, mixing and placing of concrete to assure reasonably uniform surfaces free of blemishes and defects. Repair unsightly voids or honeycombing using approved methods. Fins and other projections shall be neatly dressed off. Form offsets greater than the specified tolerances shall be ground down.

B. Patching Defective Areas: Repair and patch defective areas with cement mortar immediately after removing forms, when acceptable to Architect / Engineer.

C. Mix dry-pack mortar, consisting of one part Portland cement to 2-1/2 parts fine aggregate passing a No. 16 mesh sieve, using only enough water as required for handling and placing.

D. Cut out honeycombs, rock pockets, voids over 1/4 inch in any dimension, and holes left by tie rods and bolts down to solid concrete but in no case to a depth less than 1 inch.

Make edges of cuts perpendicular to the concrete surface. Thoroughly clean, dampen with water, and brush-coat the area to be patched with bonding agent. Place patching mortar before bonding agent has dried.

E. For surfaces exposed to view, blend white Portland cement and standard Portland cement so that, when dry, patching mortar will match surrounding color. Provide test areas at inconspicuous locations to verify mixture and color match before proceeding with patching. Compact mortar in place and strike-off slightly higher than surrounding surface.

F. Repairing Formed Surfaces: Remove and replace concrete having defective surfaces if defects cannot be repaired to satisfaction of Architect / Engineer. Surface defects include color and texture irregularities, cracks, spalls, air bubbles, honeycomb, rock pockets, fins and other projections on the surface, and stains and other discolorations that cannot be removed by cleaning. Flush out form tie holes and fill with dry-pack mortar or pre-cast cement cone plugs secured in place with bonding agent.

G. Repair concealed formed surfaces, where possible, containing defects that affect the concrete's durability. If defects cannot be repaired, remove and replace the concrete.

H. Repairing Unformed Surfaces: Test unformed surfaces, such as monolithic slabs, for smoothness and verify surface tolerances specified for each surface and finish. Correct low and high areas as specified. Test unformed surfaces sloped to drain for trueness of slope and smoothness by using a template having the required slope.

I. Repair finished unformed surfaces containing defects that affect the concrete's durability. Surface defects include crazing and cracks in excess of 0.01 inch wide or that penetrate to the reinforcement or completely through non-reinforced sections regardless of width, spalling, popouts, honeycombs, rock pockets, and other objectionable conditions.

J. Correct high areas in unformed surfaces by grinding after concrete has cured at least 14 days.

K. Correct low areas in unformed surfaces during or immediately after completing surface finishing operations by cutting out low areas and replacing with patching mortar. Finish repaired areas to blend into adjacent concrete. Proprietary underlayment compounds may be used when acceptable to Architect.

L. Repair defective areas, except random cracks and single holes not exceeding 1 inch in diameter, by cutting out and replacing with fresh concrete. Remove defective areas with clean, square cuts and expose reinforcing steel with at least 3/4-inch clearance all around. Dampen concrete surfaces in contact with patching concrete and apply bonding agent. Mix patching concrete of same materials to provide concrete of same type or class as original concrete. Place, compact, and finish to blend with adjacent finished concrete. Cure in same manner as adjacent concrete.

M. Repair isolated random cracks and single holes 1 inch or less in diameter by dry-pack method. Groove top of cracks and cut out holes to sound concrete and clean of dust,

dirt, and loose particles. Dampen cleaned concrete surfaces and apply bonding compound. Place dry-pack before bonding agent has dried. Compact dry-pack mixture in place and finish to match adjacent concrete. Keep patched area continuously moist for at least 72 hours.

N. Perform structural repairs with prior approval of Architect / Engineer for method and procedure, using specified epoxy adhesive and mortar.

O. Repair methods not specified above may be used, subject to acceptance of Architect / Engineer.

3.10 CLEANUP

A. Imperfect or damaged work or any material damaged or determined to be defective before final completion and acceptance of the entire job, shall be satisfactorily replaced at the Contractor's expense, and in conformity with all of the requirements of the Drawings and Specifications. Removal and replacement of concrete work shall be done in such manner as not to impair the appearance or strength of the structure in any way.

B. Cleaning: Upon completion of the work all forms, equipment, protective coverings and any rubbish resulting there from shall be removed from the site. After sweeping floors, wash floors with clean water. Finished concrete surfaces shall be left in a clean condition, satisfactory to the Owner.

END OF SECTION

SECTION 03350

CONCRETE FINISHING

PART 1 - GENERAL

1.1 SUMMARY

A. Section Includes:
1. Finishing concrete floors
2. Floor surface treatment

B. Related Sections:
1. Section 03300 - Cast-in-Place Concrete
2. Section 07900 - Joint Sealers

1.2 REFERENCES

A. American Concrete Institute:
1. ACI 301 - Specifications for Structural Concrete
2. ACI 302.1 - Guide for Concrete Floor and Slab Construction

B. ASTM International:
1. ASTM E1155 - Standard Test Method for Determining Floor Flatness and of Levelness Using the F-number System

1.3 SUBMITTALS

A. Section 01330 - Submittal Procedures: Submittal procedures.

B. Product Data: Submit data on sealer, curing compounds, compatibilities, and limitations.

C. Installer qualifications.

1.4 CLOSEOUT SUBMITTALS

A. Section 01700 - Execution Requirements: Closeout procedures.

B. Operation and Maintenance Data: Submit data on maintenance renewal of applied coatings.

1.5 QUALITY ASSURANCE

A. Perform Work in accordance with ACI 301 and ACI 302.1.

B. Maintain one copy of each document on site.

1.6 QUALIFICATIONS

A. Manufacturer: Company specializing in manufacturing Products specified in this section with minimum three years documented experience.

B. Installer: Company specializing in performing work of this section with minimum three years documented experience.

1.7 DELIVERY, STORAGE, AND HANDLING

A. Section 01600 - Product Requirements: Product storage and handling requirements.

B. Deliver materials in Manufacturer's packaging including application instructions.

1.8 ENVIRONMENTAL REQUIREMENTS

A. Section 01600 - Product Requirements: Environmental conditions affecting products on site.

B. Temporary Lighting: Minimum 200 W light source, placed 8 feet above floor surface, for each 425 sq ft of floor being finished, as needed for finishing.

1.9 COORDINATION

A. Section 01300 - Administrative Requirements: Coordination and project conditions.

B. Coordinate the Work with concrete floor placement and concrete floor curing.

PART 2 - PRODUCTS

2.1 MANUFACTURERS

A. Manufacturers:
1. Euclid Chemical Co.
2. Master Builders Inc.
3. Sika Corp.
4. Substitutions: Section 01600 - Product Requirements.

PART 3 - EXECUTION

3.1 EXAMINATION

A. Section 01300 - Administrative Requirements: Coordination and project conditions.

B. Verify floor surfaces are acceptable to receive the Work of this section.

3.2 FLOOR FINISHING

A. Finish concrete floor surfaces in accordance with ACI 301 and ACI 302.1.

B. Wood float surfaces receiving tile with full bed setting system.

C. Steel trowel surfaces receiving carpeting, resilient flooring, seamless flooring, and thin set ceramic tile.

D. Steel trowel surfaces which are indicated to be exposed.

E. In areas with floor drains, maintain design floor elevation at walls; slope surfaces uniformly to drains at 1/8 inch per foot and as indicated on Drawings.

F. Highway straightedges are recommended for use in lieu of bullfloats for all slab placement and finishing operations.

G. Screeding: Immediately after placing, slab shall be vibrated and struck off true by double screeding to the required level, at or below the elevation or grade of the finished slabs as indicated on the Drawings. Vibrators shall not be used to spread the concrete.

H. Straightedging: Immediately after screeding and before excess bleed water is present on the surface, straighten the surface using a highway straightedge.

I. Edging and jointing, where required, shall be done after bleed water has evaporated and before further finishing.

J. Float Finish
   1. Locations: All concrete surfaces under waterproofing membrane, setting beds for brick, mud- set tile, pavers, or terrazzo, and noncomposite topping slabs.
   2. Finishing: After concrete has stiffened sufficiently, and after bleed water has disappeared, the surface shall be wood floated at least twice to produce a uniform texture with no coarse aggregate visible. Use hand floats or power machine floats, applying sufficient pressure to bring the moisture to the surface.

K. Trowel Finish
   1. Locations: Exposed concrete floors not otherwise specified, concrete surfaces under carpets, vinyl tile, thin set tile, wood flooring, elastomeric coatings, and painted concrete floors, and roof slabs that are future floors.
   2. Finishing: After concrete has stiffened sufficiently to permit operation and after bleed water has disappeared, hand or machine float the surface. Follow immediately by steel troweling at least twice with hand or machine trowels.

L. Broom Finish
   1. Locations: Exterior stairs, ramps, walks, curbs, islands, parking and drive areas, and other locations noted on the Drawings.
   2. Finishing: Same method as specified for trowel finish, except after initial troweling brush concrete surfaces with soft brush or broom to texture specified

by the Architect. Striations shall run in the direction of the drainage slope, if any, unless otherwise specified.

M. Saw-cut Control Joints: After completion of finishing operations, cut control joints along straight lines where called for on the Drawings. Saw cutting shall be done within 12 hours after the completion of finishing, but not so soon to cause raveling of the joint. Cut to the depth indicated on the Drawings.

3.3 TOLERANCES

A. Section 01400 - Quality Requirements: Tolerances.

B. Maximum Variation of Surface Flatness For Exposed Concrete Floors: 1/8 inch in 10 ft .

C. Maximum Variation of Surface Flatness Under Seamless Resilient Flooring: 1/8 inch in 10 ft.

D. Maximum Variation of Surface Flatness Under Carpeting: 1/8 inch in 10 ft.

E. Correct defects in defined traffic floor by grinding or removal and replacement of defective Work. Areas requiring corrective Work will be identified. Re-measure corrected areas by same process.

F. All floors are subject to measurement for flatness and levelness and shall comply with the following:
1. Slabs shall be flat within a tolerance of 1/8” in 10’-0” when tested with a ten foot long straightedge. Apply straightedge to the slab at 3’-0” intervals in both directions, lapping straightedge 3’-0” on areas previously checked. Low spots shall not exceed the above dimension anywhere along the straightedge. Flatness shall be checked the next work day after finishing.
2. Slabs shall be level within a tolerance of plus or minus 1/8” in 10’- 0”, not to exceed ¾” total variation, anywhere on the floor, from elevations indicated on the Drawings. Levelness shall be checked on a 10’-0” grid using a level after removal of forms.

G. Floor Elevation Tolerance Envelope:
1. The acceptable tolerance envelope for absolute elevation of any point on the slab surface, with respect to the elevation shown on the Drawings, is as follows:
   a. Slab-on-Grade Construction: +/- ¾”
   b. Top surfaces of formed slabs measured prior to removal of supporting shores: +/- ¾”
   c. Top surfaces of all other slabs: +/- ¾”
   d. Slabs specified to slope shall have a tolerance from the specified slope of 1/8” in 10’-0” at any point, up to ¾” from theoretical elevation at any point.

H. Remedial Measures for Slab Finish Construction not Meeting Specified Tolerances:
1. Application of Remedial Measures. Remedial measures specified herein are required whenever specified tolerances are exceeded

2. Modification of Existing Surface:
   a. If, in the opinion of the Architect or Owner's representative, all or any portion of the substandard work can be repaired without sacrifice to the appearance or serviceability of the area, the Contractor shall immediately undertake the approved repair method.
   b. The Contractor shall submit for review and approval a detailed work plan of the proposed repair showing areas to be repaired, method of repair, and time required to make the repair.
   c. Repair method(s), at the sole discretion of the Architect or Owner's Representative, may include grinding (floor stoning), planing, retopping with specified floor leveling compound, or any combination of the above.
   d. All repair work shall be performed at no additional cost to the Owner and with no extension to the construction schedule.
3. Removal and Replacement:
   a. If, in the opinion of the Architect/Engineer or Owner's Representative, all or any portion of the substandard work cannot be satisfactorily repaired without sacrifice to the appearance or serviceability of the area, the Contractor shall remove and replace the defective work as directed.
   b. Replacement sections may be retested for compliance at the discretion of the Architect/Engineer or Owner's Representative.
   c. All replacement work shall be performed at no additional cost to the Owner and with no extension to the construction schedule.

END OF SECTION

SECTION 04065

MASONRY MORTAR AND GROUT

PART 1 - GENERAL

1.1 SUMMARY

A. Section includes mortar and grout for masonry.

B. Related Sections:
1. Section 04210 – Stone Masonry
2. Section 04600 – Cast Stone
3. Section 04820 - Reinforced Unit Masonry Assemblies: Installation of mortar and grout
4. Section 08115 - Standard Steel Frames: Grouting steel door frames

1.2 REFERENCES

A. ASTM International:
1. ASTM C91 - Standard Specification for Masonry Cement
2. ASTM C94 - Standard Specification for Ready-Mixed Concrete
3. ASTM C143/C143M - Standard Test Method for Slump of Hydraulic Cement Concrete
4. ASTM C144 - Standard Specification for Aggregate for Masonry Mortar
5. ASTM C150 - Standard Specification for Portland Cement
6. ASTM C199 - Standard Test Method for Pier Test for Refractory Mortars
7. ASTM C270 - Standard Specification for Mortar for Unit Masonry
8. ASTM C387 - Standard Specification for Packaged, Dry, Combined Materials for Mortar and Concrete
9. ASTM C404 - Standard Specification for Aggregates for Masonry Grout
10. ASTM C476 - Standard Specification for Grout for Masonry
11. ASTM C595 - Standard Specification for Blended Hydraulic Cements
12. ASTM C1019 - Standard Test Method for Sampling and Testing Grout
13. ASTM C1314 - Standard Test Method for Constructing and Testing Masonry Prisms Used to Determine Compliance with Specified Compressive Strength of Masonry
14. ASTM C1329 - Standard Specification for Mortar Cement
15. ASTM C1357 - Standard Test Method for Evaluating Masonry Bond Strength.

B. The Masonry Society:
1. TMS MSJC - Building Code for Masonry Structures (ACI 530/ASCE 5/TMS 402), Specification for Masonry Structures (ACI 530.1/ASCE 6/TMS 602) and Commentaries.

1.3 SUBMITTALS

A. Section 01330 - Submittal Procedures: Submittal requirements.

B. Samples: Submit two, 2” cube samples of mortar, illustrating mortar color and color range.

C. Design Data: Submit design mix when Property specification of ASTM C270 is to be used, required environmental conditions, and admixture limitations.

D. Test Reports:
1. Submit reports on mortar indicating conformance of mortar to property requirements of ASTM C270 and test and evaluation reports to ASTM C780 for aggregate ratio and water content, air content, consistency and compressive strength.
2. Submit reports on grout indicating conformance of component grout materials to requirements of ASTM C476 and test and evaluation reports to ASTM C1019.

E. Manufacturer's Installation Instructions: Submit premix mortar Manufacturer's installation instructions.

F. Material Certificates: Include statements of material properties indicating compliance with requirements including compliance with standards and type designations within standards. Provide for each type and size of the following:
1. Cementitious materials. Include brand, type, and name of Manufacturer
2. Preblended, dry mortar mixes. Include description of type and proportions of ingredients.

G. Manufacturer's Certificate: Certify products meet or exceed specified requirements.

1.4 QUALITY ASSURANCE

A. Perform Work in accordance with TMS MSJC Code and TMS MSJC Specification.

B. Maintain one copy of each document on site.

C. Source Limitations for Mortar Materials: Obtain mortar ingredients of a uniform quality, including color for exposed masonry, from a single Manufacturer for each cementitious component and from one source or producer for each aggregate.

1.5 DELIVERY, STORAGE, AND HANDLING

A. General: Comply with Section 01400 – Quality Requirements

B. Ordering: Comply with Manufacturer’s ordering instructions and lead time requirements to avoid construction delays.

C. Packing, Shipping, Handling and Unloading: Per Manufacturer.

D. Delivery: Deliver materials in Manufacturer’s original, unopened, undamaged containers with identification labels intact.

E. Storage and Protection: Store materials protected from exposure to harmful weather conditions and at temperature conditions recommended by Manufacturer. Store materials in clean, dry, sheltered area, off ground, until used.

F. Store aggregates where grading and other required characteristics can be maintained and contamination avoided.

G. Deliver preblended, dry mortar mix in moisture-resistant containers designed for lifting and emptying into dispensing silo. Store preblended, dry mortar mix in delivery containers on elevated platforms, under cover, and in a dry location or in a metal dispensing silo with weatherproof cover.

H. Store masonry accessories, including metal items, to prevent corrosion and accumulation of dirt and oil.

1.6 ENVIRONMENTAL REQUIREMENTS

A. Section 01600 - Product Requirements.

B. Hot and Cold Weather Requirements: TMS MSJC Specification.

PART 2 - PRODUCTS

2.1 MORTAR AND MASONRY GROUT

A. Manufacturers:
1. CTS Cement Manufacturing Co.
2. Lehigh Portland Cement
3. The Quikrete Companies
4. Southern Grouts and Mortars
5. Substitutions: Section 01600 - Product Requirements.

2.2 COMPONENTS

A. Portland Cement: ASTM C 150, Type I or II, except Type III may be used for cold-weather construction. Provide natural color or white cement as required to produce mortar color indicated.

B. Hydrated Lime: ASTM C 207, Type S.

C. Portland Cement-Lime Mix: Packaged blend of portland cement complying with ASTM C 150, Type I or Type III, and hydrated lime complying with ASTM C 207, Type S.

D. Colored Cement Product: Packaged blend made from portland cement and lime and mortar pigments, all complying with specified requirements, and containing no other ingredients.

1. Formulate blend as required to produce color indicated or, if not indicated, as selected from Manufacturer's standard colors.
2. Pigments shall not exceed 10 percent of portland cement by weight.
3. Products:
   a. Colored or white Portland Cement-Lime Mix:
      1) Capital Materials Corporation; Riverton Portland Cement Lime Custom Color
      2) Holcim (US) Inc.; Rainbow Mortamix Custom Color Cement/Lime
      3) Lafarge North America Inc.; Eaglebond
      4) Lehigh Cement Company; Lehigh Custom Color Portland/Lime Cement.

E. Aggregate for Mortar: ASTM C 144.
1. For mortar that is exposed to view, use washed aggregate consisting of natural sand or crushed stone.
2. For joints less than 1/4 inch thick, use aggregate graded with 100 percent passing the No. 16 sieve.

F. Cold-Weather Admixture: Nonchloride, noncorrosive, accelerating admixture complying with ASTM C 494/C 494M, Type C, and recommended by Manufacturer for use in masonry mortar of composition indicated.
1. Products:
   a. Euclid Chemical Company (The); Accelguard 80
   b. Grace Construction Products, a unit of W. R. Grace & Co. - Conn.; Morset
   c. Sonneborn, Div. of ChemRex; Trimix-NCA.

G. Grout Aggregate: ASTM C404, fine and coarse.

H. Water: Clean and potable.

I. Calcium chloride is not permitted.

2.3 MIXES

A. Mortar Mixes: General: Do not use admixtures, including pigments, air-entraining agents, accelerators, retarders, water-repellent agents, antifreeze compounds, or other admixtures, unless otherwise indicated.
1. Do not use calcium chloride in mortar.
2. Limit cementitious materials in mortar to portland cement and lime.
3. Add cold-weather admixture (if used) at same rate for all mortar that will be exposed to view, regardless of weather conditions, to ensure that mortar color is consistent.

B. Preblended, Dry Mortar Mix: Furnish dry mortar ingredients in form of a preblended mix. Measure quantities by weight to ensure accurate proportions, and thoroughly blend ingredients before delivering to Project site.

C. Mortar for Unit Masonry: Comply with ASTM C 270, Proportion Specification. Provide the following types of mortar for applications stated unless another type is indicated or needed to provide required compressive strength of masonry.
   1. For exterior, above-grade, non-load-bearing walls and for other applications where another type is not indicated, use Type N.

D. Pigmented Mortar: Use colored cement product.

E. Mortar Mixing:
   1. Thoroughly mix mortar ingredients in accordance with ASTM C270 in quantities needed for immediate use.
   2. Achieve uniformly damp sand immediately before mixing process.
   3. Add mortar color and admixtures to achieve uniformity of mix and coloration.
   4. Re-temper only within two hours of mixing.

F. Grout Mixes:
   1. Grout for Non-Structural Masonry: 2,000 psi strength at 28 days; 8-11 inches slump; mixed in accordance with ASTM C476 Fine grout.
   2. Grout for Structural Masonry: 2,500 psi strength at 28 days; 8-11 inches slump; mixed in accordance with ASTM C476 Fine grout.
   3. Application:
      a. Coarse Grout: For grouting spaces with minimum 4 inches dimension in every direction.
      b. Fine Grout: For grouting other spaces.

G. Grout Mixing:
   1. Thoroughly mix grout ingredients in quantities needed for immediate use in accordance with ASTM C476.
   2. Add admixtures; mix uniformly.

PART 3 - EXECUTION

3.1 EXAMINATION

A. Section 01300 - Administrative Requirements: Coordination and project conditions.

B. Request inspection of spaces to be grouted.

3.2 PREPARATION

A. Apply bonding agent to existing concrete surfaces.

3.3 INSTALLATION

A. Install mortar and grout in accordance with TMS MSJC Specification.

3.4 FIELD QUALITY CONTROL

A. Section 01400 - Quality Requirements: Testing and Inspection Services 01700 - Execution Requirements: Testing, adjusting, and balancing.

B. Establishing Mortar Mix: In accordance with ASTM C270.

C. Testing of Grout Mix: In accordance with ASTM C1019 for compressive strength, and in accordance with ASTM C143/C143M for slump.

D. Test flexural bond strength of mortar and masonry units to ASTM C1357; test in conjunction with masonry unit sections specified.

E. Test compressive strength of mortar and masonry to ASTM C1314; test in accordance with masonry unit sections specified.

END OF SECTION

SECTION 04210

STONE MASONRY

PART 1 - GENERAL

1.1 SUMMARY

A. Section includes cut and rubble stone veneer at exterior walls; metal anchors and accessories; mortar and masonry flashing.

B. Related Sections:
1. Section 04090 - Masonry Accessories
2. Section 04100 - Mortar: Bedding and pointing mortar
3. Section 04600 – Cast Stone
4. Section 05500 - Metal Fabrications: Product requirements for metal fabricated items for building into stone masonry for placement by this section
5. Section 07900 - Joint Sealants: Sealant for perimeter, control, and expansion joints.

1.2 REFERENCES

A. American Society for Testing and Materials:
1. ASTM A36/A36M - Standard Specification for Carbon Structural Steel
2. ASTM A153/A153M - Standard Specification for Zinc Coating (Hot-Dip) on Iron and Steel Hardware
3. ASTM A580/A580M - Standard Specification for Stainless Steel Wire
4. ASTM C568 - Standard Specification for Limestone Dimension Stone.

B. The Masonry Society:
1. TMS MSJC - Building Code for Masonry Structures (ACI 530/ASCE 5/TMS 402), Specification for Masonry Structures (ACI 530.1/ASCE 6/TMS 602) and Commentaries.

1.3 SUBMITTALS

A. Section 01330 - Submittal Procedures.

B. Product Data: Submit data on stone units, mortar products, reinforcement, wall tiles, anchors, and flashings.

C. Samples:
1. Submit two (2) stone samples illustrating minimum and maximum stone sizes, color range of each color required and texture.
2. Submit mortar color samples.

1.4 QUALIFICATIONS

A. Manufacturer: Company specializing in manufacturing products specified in this section with minimum three years of documented experience.

B. Installer: Company specializing in performing Work of this section with minimum three years of documented experience.

1.5 MOCKUP

A. Section 01400 - Quality Control Procedures: Mockup requirements.

B. Construct stone wall mockup, 6 feet long by 5 feet high, including stone, backup masonry, reinforcing, wall ties, mortar, sill and head flashings, corner condition, and typical control joint. Provide mock-up panels and retain until approved by Architect.

C. Locate where directed by Architect/Engineer.

D. Remove mockup when directed by Architect/Engineer.

1.6 PRE-INSTALLATION MEETINGS

A. Section 01300 - Administrative Requirements: Pre-installation meeting.

B. Convene minimum one week prior to commencing work of this section.

1.7 DELIVERY, STORAGE, AND HANDLING

A. Section 01400 - Quality Control Procedures: Product storage and handling requirements.

B. Protect stone from discoloration during storage on site.

C. Provide ventilation to prevent condensation from forming on stone.

1.8 ENVIRONMENTAL REQUIREMENTS

A. Hot and Cold Weather Requirements: TMS MSJC Specification.

PART 2 - PRODUCTS

2.1 MORTAR PLACED STONE ASSEMBLIES

A. Manufacturer:
1. San Jacinto Materials, Inc.
San Antonio, TX 78707; or approved equal.

2.2 LIMESTONE VENEER COLOR SCHEDULE

A. Limestone Color: " Old Yeller" – as manufactured by San Jacinto Materials, Inc. , San Antonio, TX. 78707, (210) 736-0924.

B. Surface Texture: Split face.

C. Mortar and Grout: As specified in Section 04210.

D. Mortar Joint Color – Color to match limestone veneers, or as approved by Architect.

2.3 ACCESSORIES

A. Horizontal Joint Reinforcement: Ladder type, stainless steel wire conforming to ASTM A580/A580M Type 304, 3/16 inch side rods with 3/16 inch cross ties.

B. Wall Ties: Formed steel wire, 10 gage diameter, stainless steel conforming to ASTM A580/A580M, wire loop for embedment in back-up masonry, with provision for vertical adjustment after attachment.

C. Other Anchors in Direct Contact with Stone: ASTM A666, Type 304, stainless steel, of sizes and configurations required for support of stone and applicable superimposed loads.

D. Setting Buttons and Shims: Plastic.

E. Through-wall Flashings: Sheet copper; 16oz/sq ft thick. Copper-Laminated Flashing: Manufacturer's standard laminated flashing consisting of 5-oz./sq. ft. sheet copper bonded with asphalt between 2 layers of glass-fiber cloth. Use only where flashing is fully concealed in masonry. Acceptable Copper-Laminated Flashing Manufacturers:
1. Copper Fabric Flashing; Advanced Building Products, Inc.
2. Copper Fabric; AFCO Products, Inc.
3. H & B C-Fab Flashing; Hohmann & Barnard, Inc.
4. Type FCC-Fabric Covered Copper; Phoenix Building Products
5. Copper Fabric Flashing; Polytite Manufacturing Corp.
6. Copper Fabric Flashing; Sandell Manufacturing Co., Inc.
7. York Copper Fabric Flashing; York Manufacturing, Inc.

F. Masonry Cavities: Masonry Mat-full height.

G. Joint Filler: Closed cell foam

H. Cleaning Solution: Non-acid, not harmful to stone, joint materials, or adjacent surfaces.

I. Description: Airspace Maintenance and Cavity Drainage Mat. The masonry mat shall be specifically designed for masonry cavities to prevent mortar from making contact with the backup and ensure water management. The masonry mat shall be fluid conducting, non-absorbent, mold and mildew resistant polymer mesh consisting of 100% recycled plastic with binder. Masonry mat is to be a non-woven textile product in random pattern and have voids no greater than 1/4" in diameter. Masonry mat is to be installed substantially continuous behind masonry at bottom of airspace or at lintels – 16” high; full length.
   a. Manufacturer: CAVCLEAR / ARCHOVATIONS, Inc. Contact: P.O. Box 241, Hudson, WI 54016 Telephone: (715) 381-5773 Fax: (715) 381-9883, Website: www.cavclear.com

J. Thickness: Select masonry mat thickness of 1-1/4 inches to allow no more than 3/8 inch tolerance between the masonry mat and masonry wythe.

K. Sizes: 16 inch x 8 foot pieces. 8 inch x 8 foot pieces when needed to accommodate other building components.

L. Available Stone Mat size: 1” thickness by 16” x 96".

M. Masonry Mat: Cavity Airspace Maintenance and Drainage Material

N. Weep Vents: 3/8” nylon rope in the vertical joints of masonry.

O. Color as selected from Manufacturer standard.

2.4 FABRICATION

A. Nominal Thickness: 4 inch

B. Nominal Face Size: Random size and shape, roughly square and/or rectangular, as shown on drawings.

C. Pattern and Coursing: Set random size stone at random and irregular coursing; and cut stone at running bond coursing as shown in drawings .

D. Fabricate for random size stone, ½” to 2” mortar beds and joints; and for cut stone at 3/8” mortar bed and joints.

E. Slope exposed top surfaces of stone and horizontal sill surfaces for shedding water.

PART 3 - EXECUTION

3.1 EXAMINATION

A. Section 01310 - Construction Schedules.

B. Verify support work and site conditions are ready to receive work of this section.

C. Verify items built-in under other sections are properly located and sized.

3.2 PREPARATION

A. Establish lines, levels, and coursing. Protect from disturbance.

B. Clean interior stone prior to erection. Do not use wire brushes or implements that mark or damage exposed surfaces.

C. Coat cavity surfaces with damp-proofing prior to setting. Allow coating to cure.

D. Clean sawn surfaces of rust stains and iron particles.

3.3 INSTALLATION

A. Install flashings of longest practical length and seal watertight to back-up. Lap end joints minimum 6 inches and seal watertight.

B. Cut and or split stone at site to produce clean faces.

C. Size stone units to fit opening dimensions and perimeter conditions.

D. Wet absorptive stone in preparation for placement to minimize moisture suction from mortar.

E. Arrange stone pattern in color uniformity and minimize visual variations.

F. Arrange cut-stone coursing in running bond with consistent joint width.

G. Set stone in full mortar setting bed to fully support stone over bearing surface. Use setting buttons or shims to maintain correct joint width.

H. Reinforcement And Anchorage:
1. Attach wall ties to back-up to bond veneer to back-up at maximum 16 inches oc vertically and 36 inches oc horizontally, or a min. of one for every 2-2/3 sq. ft.

I. Joints:
1. Pack mortar into joints and work into voids. Finish mortar joints with rubbed burlap sack finish or as per sample location shown on plans.
2. At joints to be sealed, clean mortar out of joint before mortar sets. Brush joints clean.
3. Seal joints indicated with sealant. Perform sealant work in accordance with requirements of Section 07920

J. Accessories:
1. Install cavity vents at top of each cavity space, at spacing of 24 inches on center, horizontally.
2. Install weeps in vertical stone joints at 24 inches on center, horizontally; immediately above horizontal flashings, above shelf angles and supports, and at bottom of walls. Do not permit mortar accumulation in cavity space.

K. Install masonry mat continuously throughout the full-height of exterior masonry cavities during construction of exterior wythe; follow Manufacturer's installation instructions.

L. Install horizontally between wall ties, stagger end joints in adjacent rows.

M. Use multiple layers at bottom of wall and above through-wall flashings when air space depth exceeds masonry mat thickness by more than 3/8inch. Extend extra mat at least to top of base flashing.

N. Butt adjacent pieces to moderate contact. Fit to perimeter construction and penetrations without voids.

O. Place rope vents in head joints at exterior wythe of cavity wall located immediately above ledges and flashing, spaced 48 inches on center, unless otherwise shown. Extend rope into cavity at least 2" and cut excess flush with face of masonry.

3.4 FIELD QUALITY CONTROL

A. Section 01400 - Quality Control Procedures: Testing and Inspection

B. Testing of Mortar and Grout: In accordance with Section 04810

3.5 CLEANING

A. Section 01700 - Execution Requirements: Final cleaning.

B. Remove excess mortar as work progresses, and upon completion of work.

C. Clean soiled surfaces with non-acid cleaning solution.

D. Use non-metallic tools in cleaning operations.

3.6 PROTECTION OF INSTALLED CONSTRUCTION

A. Section 01700 - Execution Requirements: Protecting installed construction.

B. During temporary storage on site, at end of working day, and during rainy weather, cover stone work exposed to weather with non-staining waterproof coverings, securely anchored.

END OF SECTION

SECTION 04600

CAST STONE

PART 1 - GENERAL

1.1 DESCRIPTION

A. Provide cast stone star as shown on drawings.

1.2 SHOP DRAWINGS

A. Submit for approval, shop drawings and color selection samples.

PART 2 - PRODUCTS

2.1 MATERIALS

A. Cast Stone Materials: Color as selected by Architect. The stone materials shall conform to the following specifications (latest editions) of the American Society for Testing and Materials:
   1. Portland cement: Type I, II, or III, specifications for Portland cement, ASTM C150. Approved non-shrink Portland cement may be used at the Manufacturer's option.
   2. Aggregates: As per Manufacturer's standards.
   3. Reinforcement steel:
      a. "Billet-Steel Bars for Concrete Reinforcement," ASTMA15
      b. "Rail-Steel Bars for Concrete Reinforcement," ASTM A16
      c. "Axle-Steel Bars for Concrete Reinforcement," ASTM A160
      d. "Wire for Concrete Reinforcement," ASTM A92
      e. "Welded Steel Wire Fabric for Concrete Reinforcement," ASTM A185.
   4. Water: Water shall be clean and free from deleterious substances.

B. Mortar: Mortar used in installing all stone shall conform to specifications for "Mortar for Unit Masonry," ASTM C20 (latest edition) Type "S", except the mortar shall be proportioned as follows:
   1. One (1) part Portland cement
   2. One-half (1/2) part Type "S" hydrated lime
   3. Four and one-half (4 ½) parts sand.

C. Reinforcement: The stone shall be reinforced with welded wire fabric and/or steel reinforcement bars. Galvanized reinforcement shall be used where minimum cover of one-half (1/2) inch cannot be maintained.

D. Anchors:
   1. Galvanized steel anchors shall be case into the stone.
   2. Bolts and cramp anchor grooves shall be cast into the stone.

E. Waterproofing: One (1) coat of three percent (3%) silicone waterproofing shall be applied to the face of all stone before delivery to the jobsite.

F. Finish: All stone shall conform to the sample on file with the Architect.

G. Waterproofing Sealer:
   1. Equal to sure Klean "Weather Seal Siloxane PD" as manufactured by Prosoco, Inc., Dallas, Texas. Provide Manufacturer's 10 year warranty.

PART 3 - EXECUTION

3.1 INSTALLATION

A. Joints: All joints shall be ¼ inch or as shown on drawings. Joints shall be filled with Type "S" mortar as the stone is set. Mortar shall have an approved non-shrink additive and be waterproofed with Master Builders "Omicron" or equal. Face joints shall be raked to a depth of ¾ inch and pointed with white mortar. Caulking compound shall be a polysulfide rubber sealant or approved equal. After caulking, the joints shall be pointed with white mortar.

B. Patching: Patching of minor defects will be permitted, if performed with the proper materials, by skilled craftsmen and to the Architect's satisfaction.

C. Cleaning: After stone is installed, all foreign matter shall be removed from the surface of the stone using a stiff fiber brush, Dutch cleanser or equal and clear water. Acid shall not be used in cleaning.

END OF SECTION

SECTION 04820

REINFORCED UNIT MASONRY ASSEMBLIES

PART 1 - GENERAL

1.1 SUMMARY

A. Section includes face brick and concrete masonry units; anchorage and accessories.

B. Related Sections:
1. Section 04065 - Masonry Mortar and Grout: Mortar and grout
2. Section 05500 - Metal Fabrications: Product requirements for loose steel lintels and fabricated steel items for placement by this section
3. Section 07260 - Vapor Retarders: Vapor retarder membrane placed
4. Section 07840 - Firestopping: Firestopping at penetrations of masonry work
5. Section 07900 - Joint Sealers: Rod and sealant at control and expansion joints.

1.2 REFERENCES

A. ASTM International:
1. ASTM A153/A153M - Standard Specification for Zinc Coating (Hot-Dip) on Iron and Steel Hardware
2. ASTM A580/A580M - Standard Specification for Stainless Steel Wire
3. ASTM A615/A615M - Standard Specification for Deformed and Plain Billet-Steel Bars for Concrete Reinforcement
4. ASTM A641/A641M - Standard Specification for Zinc-Coated (Galvanized) Carbon Steel Wire
5. ASTM A653/A653M - Standard Specification for Steel Sheet, Zinc-Coated (Galvanized) or Zinc-Iron Alloy-Coated (Galvannealed) by the Hot-Dip Process
6. ASTM A951 - Standard Specification for Masonry Joint Reinforcement
7. ASTM B370 - Standard Specification for Copper Sheet and Strip for Building Construction
8. ASTM C55 - Standard Specification for Concrete Brick
9. ASTM C62 - Standard Specification for Building Brick (Solid Masonry Units Made From Clay or Shale)
10. ASTM C67 - Standard Test Methods for Sampling and Testing Brick and Structural Clay Tile
11. ASTM C129 - Standard Specification for Nonloadbearing Concrete Masonry Units
12. ASTM C140 - Standard Test Methods of Sampling and Testing Concrete Masonry Units
13. ASTM C216 - Standard Specification for Facing Brick (Solid Masonry Units Made from Clay or Shale)
14. ASTM C652 - Standard Specification for Hollow Brick (Hollow Masonry Units Made From Clay or Shale)
15. ASTM C744 - Standard Specification for Prefaced Concrete and Calcium Silicate Masonry Units

16. ASTM D226 - Standard Specification for Asphalt-Saturated Organic Felt Used in Roofing and Waterproofing.

B. The Masonry Society:
   1. TMS MSJC - Building Code for Masonry Structures (ACI 530/ASCE 5/TMS 402), Specification for Masonry Structures (ACI 530.1/ASCE 6/TMS 602) and Commentaries.

1.3 SUBMITTALS

A. Section 01330 - Submittal Procedures: Submittal requirements.

B. Samples for Initial Selection for the following:
   1. Face brick, in the form of straps of five or more bricks demonstrating full range of color include data for special shapes
   2. Colored mortar.
   3. Color Charts for mortar color.
   4. Concrete Masonry Units full range facing unit colors to the Architect for Selection

C. Shop Drawings: Indicate bars sizes, spacings, locations, reinforcement quantities, bending and cutting schedules, supporting and spacing devices for reinforcement, and accessories.

D. Product Data: Submit data for masonry units and fabricated wire reinforcement, wall ties, anchors, cement, lime and other accessories.

E. Samples: Submit five samples of units to illustrate color, texture and extremes of color range.

F. Design Data: Indicate required mortar strength, specified compressive strength of masonry, masonry unit assembly strength in each plane, and supportive test data.

G. Manufacturer's Certificate: Certify products meet or exceed specified requirements.

H. Project Foreman; Project experience

1.4 QUALITY ASSURANCE

A. Perform Work in accordance with TMS MSJC Code and TMS MSJC Specification.

B. Maintain one copy of each document on site.

C. FOREMAN: Provide an experienced and competent foreman. The foreman shall be in constant charge of the work and shall supervise work to see that it is carried out in strict accordance with the plans and specifications.

D. MEASUREMENT CONTROL: Submit proposed procedure for maintaining mortar proportion to Architect for approval. Once approval, insure quality control is maintained

and procedure is not varied. Measurement of mortar ingredients may be by volume using a container of known capacity or by weight, using scales.

E. Source Limitations for Masonry Units: Obtain exposed masonry units of a uniform texture and color, or a uniform blend within the ranges accepted for these characteristics, through one source from a single Manufacturer for each product required.

F. Source Limitations for Mortar Materials: Obtain mortar ingredients of a uniform quality, including color for exposed masonry, from a single Manufacturer for each cementitious component and from one source or producer for each aggregate.

1.5 QUALIFICATIONS

A. Installer: Company specializing in performing Work of this section with minimum three years documented experience.

1.6 MOCKUP

A. Section 01400 - Quality Requirements: Mock-up requirements.

B. Construct reinforced masonry wall mockup, 4 feet long by 4 feet high, including masonry, mortar and accessories, in permanent wall location for approval by Architect.

C. Locate where directed by Architect/Engineer. The sample panel shall be constructed on the back side of the building and shall be protected from damage until masonry work is approved by Architect. The approved panel shall be used as a standard to judge all masonry laid on the project. Masonry work not equal to the sample in the opinion of the Architect shall be removed and re-laid. Use sample panel to test cleaning products.

1.7 PRE-INSTALLATION MEETINGS

A. Section 01300 - Administrative Requirements: Pre-installation meeting.

B. Convene minimum two weeks prior to commencing work of this section.

1.8 DELIVERY, STORAGE, AND HANDLING

A. Section 01600 - Product Requirements: Product storage and handling requirements.

B. Accept units on site. Inspect for damage.

C. Store masonry units on elevated platforms in a dry location. If units are not stored in an enclosed location, cover tops and sides of stacks with waterproof sheeting, securely tied. If units become wet, do not install until they are dry.

D. Store cementitious materials on elevated platforms, under cover, and in a dry location. Do not use cementitious materials that have become damp.

E. Store aggregates where grading and other required characteristics can be maintained and contamination avoided.

F. Deliver preblended, dry mortar mix in moisture-resistant containers designed for lifting and emptying into dispensing silo. Store preblended, dry mortar mix in delivery containers on elevated platforms, under cover, and in a dry location or in a metal dispensing silo with weatherproof cover.

G. Store masonry accessories, including metal items, to prevent corrosion and accumulation of dirt and oil.

1.9 ENVIRONMENTAL REQUIREMENTS

A. Section 01600 - Product Requirements.

B. Protection of Masonry: During construction, cover tops of walls, projections, and sills with waterproof sheeting at end of each day's work. Cover partially completed masonry when construction is not in progress.
1. Extend cover a minimum of 24 inches down both sides and hold cover securely in place.

C. Stain Prevention: Prevent grout, mortar, and soil from staining the face of masonry to be left exposed or painted. Immediately remove grout, mortar, and soil that come in contact with such masonry.
1. Protect base of walls from rain-splashed mud and from mortar splatter by spreading coverings on ground and over wall surface.
2. Protect sills, ledges, and projections from mortar droppings.
3. Protect surfaces of window and door frames, as well as similar products with painted and integral finishes, from mortar droppings.
4. Turn scaffold boards near the wall on edge at the end of each day to prevent rain from splashing mortar and dirt onto completed masonry.

D. Hot and Cold Weather Requirements: TMS MSJC Specification.

1.10 COORDINATION

A. Section 01300 - Administrative Requirements: Coordination and project conditions.

B. Coordinate masonry work with metal panels, installation of window and door anchors.

1.11 EXTRA MATERIALS

A. Section 01700 - Execution Requirements: Spare parts and maintenance products.

B. Supply 50 of each size, color, and type of brick units.

PART 2 - PRODUCTS

2.1 REINFORCED UNIT MASONRY ASSEMBLIES

A. Manufacturers:
1. Acme Brick Co.
2. Elgin Butler Brick Co.
3. Southern Brick
4. Hanson Brick
5. Featherlite Building Products
6. Southwest Concrete Products
7. Substitutions: Section 01600 - Product Requirements.

2.2 COMPONENTS

A. CONCRETE MASONRY UNITS (CMU): Lightweight cement block, autoclave concrete masonry units conforming to ASTM C90, Type I Grade N for load bearing walls, and ASTM C129, Type I for non-bearing units. Provide all available sizes and shapes necessary to complete the project. Inside corners shall be square. Color as selected by Architect to match stone.
1. Split face
2. Special units having a vertical groove center on the end for control joints.
3. Continuous neoprene extruded key which fits into the grooves and lock the units together

B. Concrete Masonry Unit Size and Shape: Nominal modular size of 7-5/8” x 7-5/8” x 15-5/8” inches. Furnish special units for 90 degree corners, bond beams, lintels, and bullnosed corners.

2.3 ACCESSORIES

A. CMU - Horizontal reinforcing shall be a trussed-type reinforcing fabricated of No. 9 gauge galvanized steel bars; A-A Wire Products Company, "Blok-Truss", Dur-O-Wall Products Company, "Dur-O-Wall", Dayton Superior, "Ty-Wall", or approved equal. Reinforcing for exterior walls shall have three (3) continuous rods. Reinforcing for partitions may be two (2) bar type up to 12 inch wall thickness and three bar type for thickness over 12 inches. Reinforcing width shall be approximately 2" less than the combined wall thickness. Provide prefabricated corner units at all corners and tee sections at intersecting partitions.

B. Reinforcing Steel: ASTM A615/A615M, 60 ksi yield grade, deformed billet bars, uncoated finish.
1. Reinforcing in grouted masonry construction and for horizontal reinforcing used in bond beams and masonry lintels.

C. Mortar and Grout: As specified in Section 04065.

D. Adhesives, Primers, and Seam Tapes for Flashings: Flashing Manufacturer's standard products or products recommended by flashing Manufacturer for bonding flashing sheets to each other and to substrates.

E. Sealant: type as specified in Section 07900.

F. Preformed Control Joints: Rubber or Polyvinyl chloride material. Furnish with corner and tee accessories, heat fused joints.
   1. CONTROL JOINTS: Extruded rubber control joint meeting requirements of ASTM D735-RS710, or durometer hardness 80 extruded PVC conforming to ASTM D2287, as manufactured by Hohmann and Barnard, Inc., or approved equal.

G. Building Paper: ASTM D226, No. 15 asphalt saturated felt.

H. Cleaning Solution: Non-acidic, not harmful to masonry work or adjacent materials, per Manufacturer recommendation.
   1. MASONRY CLEANER: Hallmark "DC 6", Sonneborn "Sonoclean 88", or ProSoCo "SureKleen", mixed and used according to the Manufacturers printed instructions.

I. Anchor Bolts: Steel bolts complying with ASTM A307, Grade A having ASTM A563 hexhead nuts and flat washer, hot dipped galvanized.

J. Steel Lintels: Reference Section 05500 Metal Fabrications, hot-dip galvanized. See structural drawings.

PART 3 - EXECUTION

3.1 EXAMINATION

A. Section 01300 - Administrative Requirements: Coordination and project conditions.

B. Verify field conditions are acceptable and are ready to receive work.

C. Verify items provided by other sections of work are properly sized and located.

D. Verify built-in items are in proper location, and ready for roughing into masonry work.

E. Proceed with installation only after unsatisfactory conditions have been corrected.

3.2 PREPARATION

A. Direct and coordinate placement of metal anchors supplied to other Sections.

B. Furnish temporary bracing during installation of masonry work. Maintain in place until building structure provides permanent support.

C. Furnish and maintain saw-cut masonry units, as necessary to fit around all structural elements, to fit built-in, to maintain bond and coursing, or as required by job conditions. Cuts shall be neat, and clean. Units shall be cut to proper size to maintain 3/8" thick mortar coursing.

D. SCAFFOLDING

1. Provide, erect and maintain scaffolding for this work. Make it available for other trades requiring execution of work associated with masonry. Scaffolding shall be of good construction, sturdy and conforming to all government ordinances and regulations. It shall be constructed or erected in a safe and substantial manner.

3.3 INSTALLATION

A. Establish lines, levels, and coursing indicated. Protect from displacement.
1. Lay out wall dimensions in advance to minimize masonry cutting and accurate location of openings, expansion joints, returns and offsets. Avoid use of less than 1/2 size masonry units. Do not tooth discontinued masonry. Instead, rack back 1/2 unit in both directions.

B. Maintain masonry courses to uniform dimension. Form bed and head joints of uniform thickness.

C. Coursing of Concrete Masonry Units:
1. Bond: standard running, align cores
2. Coursing: One unit and one mortar joint to equal 8 inches, modular coursing
3. Mortar Joints: Concave.

D. Placing And Bonding:
1. Lay solid masonry units in full bed of mortar, with full head joints.
2. Lay hollow masonry units with face shell bedding on head and bed joints.
3. Buttering corners of joints or excessive furrowing of mortar joints are not permitted.
4. Remove excess mortar as Work progresses.
5. Interlock intersections and external corners.
6. Do not shift or tap masonry units after mortar has achieved initial set. Where adjustment is required, remove mortar and replace.
7. Perform job site cutting of masonry units with proper tools to assure straight, clean, unchipped edges. Prevent broken masonry unit corners or edges. No damaged surfaces shall be exposed to view
8. Isolate masonry from vertical structural framing members with movement joint.
9. Isolate top of masonry from horizontal structural framing members and slabs or decks with compressible joint filler.

E. Building paper: Overlap per Manufacturer requirements and seal joints.

F. Joint Reinforcement And Anchorage:
1. Space anchors as indicated, but not more than 16 inches o.c. vertically and 16 inches o.c. horizontally with not less than 1 anchor for each 2.67 sq. ft. of wall

area. Install additional anchors within 12 inches of openings and at intervals, not exceeding 24 inches, around perimeter. Not less than 4 ties per surface (minimum).

2. Fasten screw-attached anchors through sheathing to wall framing with metal fasteners of type indicated. Use two fasteners.
3. Place masonry joint reinforcement in first and second horizontal joints above and below openings. Extend minimum 16 inches each side of opening.
4. Place joint reinforcement continuous in first and second joint below top of walls.
5. Lap joint reinforcement ends minimum 6 inches.
6. Support and secure reinforcing bars from displacement. Maintain position within 1/2 inch of dimensioned position.
7. Embed anchors attached to structural steel members. Embed anchorages in every second block or sixth brick joint.

G. Masonry Flashings:
1. Extend flashings horizontally through outer wythe at foundation walls, above ledge or shelf angles and lintels, and at bottom of walls, and turn down on outside face to form drip.
2. Turn flashing up minimum 12 inches, extend through sheathing, turn flashing up 3” and anchor to wall stud frame.
3. Lap end joints minimum 6 inches and seal watertight.
4. Turn flashing, fold, and seal at corners, bends, and interruptions.

H. Lintels:
1. Install loose steel lintels over openings.
2. Install reinforced unit masonry lintels over openings where steel or precast concrete lintels are not scheduled or indicated
3. Do not splice reinforcing bars.
4. Support and secure reinforcing bars from displacement.
5. Place and consolidate grout fill without displacing reinforcing.
6. Allow masonry lintels to attain specified strength before removing temporary supports.
7. Maintain minimum 8 inch bearing on each side of opening.

I. Grouted Components:
1. Reinforce bond beam per code requirement.
2. Lap splices bar diameters required by code.
3. Support and secure reinforcing bars from displacement.
4. Place and consolidate grout fill without displacing reinforcing.
5. At bearing locations, fill masonry cores with grout for minimum 12 inches either side of opening.
6. Fill cells of CMU on both sides of all openings and on both sides of control joints and expansion joints with type Class "B" Course Grout. Cells shall be reinforced with 1 - # 4 re-bar, or as noted in structural drawings. Grout shall be placed into the cells as the walls are constructed, otherwise not until the mortar has set.

J. Reinforced Masonry:
1. Lay masonry units with cells vertically aligned and cavities between wythes clear of mortar and unobstructed.

2. Place reinforcing, reinforcement bars, and grout.
3. Splice reinforcement in accordance with Section 03200.
4. Support and secure reinforcement from displacement.
5. Place and consolidate grout fill without displacing reinforcing.
6. Place grout in accordance with TMS MSJC Specification.
7. Where concrete masonry is noted to be grouted, cells containing reinforcing bars shall be filled solid with Class B grout. Grout shall not be poured until the mortar has set and cured, however, install grout as soon as possible. All cleanout closures, reinforcing, bolts and embedded items shall be in proper position before grouting is started.
8. Handle grout from the mixer to the point of deposit as rapidly as practical by methods which will prevent segregation of the mix and cause a minimum of grout splatter on reinforcing steel and masonry surfaces. Under normal weather conditions and typical masonry units, the individual lifts of grout shall be limited to four (4) feet in height with a waiting period between 30 and 60 minutes between lift placement. Depending upon weather conditions, the lift height and waiting conditions may be varied.
9. Place the first lift of grout to a uniform height and mechanically vibrate thoroughly to fill all voids. While the mortar is plastic and prior to initial set, the next lift should be poured and alternate cells vibrated 12 to 18 inches into the proceeding lift. Consolidate the proceeding lift and close any plastic shrinkage cracks or separations from the cell walls.
10. Arrange the work such that once grouting of a section of wall has started, the grouting shall proceed in lifts without stopping until the full height of the wall is poured. Reconsolidate the top lift after the required waiting period to fill any space left by settlement shrinkage.

K. Control And Expansion Joints:
1. Do not continue horizontal joint reinforcement through control and expansion joints.
2. Install preformed control joint device in continuous lengths. Seal butt and corner joints.
3. Size control joint in accordance with Section 07900 for sealant performance.
4. Form expansion joint by omitting mortar and cutting unit to form open space.
5. Install control joints at all exterior walls at both sides of door and window openings and at intervals not exceeding 20 ft centers. Control joints at doors shall begin at the upper edge of the door frame, in line with the outer jamb and shall extend the full height of the wall. Control joints at windows shall be along both edges of the opening, extending from the floor slab to the top of the wall.

L. Built-In Work:
1. As work progresses, install built-in metal door and glazed frames, fabricated metal frames, window frames, anchor bolts, and other items to be built-in the work and furnished by other sections.
2. Install built-in items plumb and level.
3. Bed anchors of metal door and glazed frames in adjacent mortar joints. Fill frame voids solid with grout or mortar. Fill adjacent masonry cores with grout minimum 12 inches from framed openings.

4. Adjust masonry anchors to masonry joints at equal spacings, not less than three each jamb and set in fresh mortar.
5. Do not build in materials subject to deterioration.

M. Cutting And Fitting:
1. Cut and fit for pipes, conduit, sleeves and grounds. Coordinate with other sections of work to provide correct size, shape, and location.
2. Obtain Architect/Engineer's approval prior to cutting or fitting masonry work not indicated or where appearance or strength of masonry work may be impaired.

3.4 ERECTION TOLERANCES

A. Section 01400 - Quality Requirements: Tolerances.

B. Maximum Variation From Alignment: 3/16" inch.

C. Maximum Variation From Unit to Adjacent Unit: 1/16 inch.

D. Maximum Variation from Plane of Wall: 1/4 inch in 10 ft and 3/8 inch in 20 ft or more.

E. Maximum Variation from Plumb: 1/4 inch per story non-cumulative.

F. Maximum Variation from Level Coursing: 1/8 inch in 3 ft and 1/4 inch in 20 ft; 1/2 inch in 40 ft.

G. Maximum Variation of Joint Thickness: 1/32 inch in 1 ft, (+ or -) 1/8 inch entire length of wall.

H. Maximum Variation from Cross Sectional Thickness of Walls: 1/4 inch.

3.5 FIELD QUALITY CONTROL

A. Section 01400 - Quality Requirements: Testing and Inspection Services 01700 - Execution Requirements: Testing, adjusting, and balancing.

B. Brick Units: Test each type in accordance with ASTM C67, 5 random units for each 50,000 units installed.

C. Concrete Masonry Units: Test each type in accordance with ASTM C140.

D. Remove and replace masonry units that are loose, chipped, broken, stained, or otherwise damaged or that do not match adjoining units. Install new units to match adjoining units; install in fresh mortar, pointed to eliminate evidence of replacement.

E. Pointing: During the tooling of joints, enlarge voids and holes, except weep holes, and completely fill with mortar. Point up joints, including corners, openings, and adjacent construction, to provide a neat, uniform appearance. Prepare joints for sealant application, where indicated.

3.6 CLEANING

A. Section 01700 - Execution Requirements: Final cleaning.

B. Remove excess mortar and mortar smears as work progresses.

C. Protect masonry against staining by installing wall coverings.

D. Replace defective mortar. Match adjacent work.

E. Thoroughly clean masonry. Clean soiled surfaces with cleaning solution.

F. Protect sash, metal lintels and other corrodible parts during cleaning.

G. Use non-metallic tools in cleaning operations.

3.7 MASONRY WASTE DISPOSAL

A. Materials: Unless otherwise indicated, excess masonry materials are Contractor's property. At completion of unit masonry work, remove from Project site.

END OF SECTION

SECTION 05312

STEEL ROOF DECK

PART 1 - GENERAL

1.1 SUMMARY

A. Section Includes:
1. Steel roof deck and accessories
2. Formed steel cant strips, eave strips, and valley strips
3. Framing for openings up to and including 18 inches
4. Bearing plates and angles.

B. Related Sections:
1. Section 05500 – Metal Fabrication
2. Section 13120 - Pre-Engineered Building.

1.2 REFERENCES

A. ASTM International:
1. ASTM A36/A36M - Standard Specification for Carbon Structural Steel
2. ASTM A653/A653M - Standard Specification for Steel Sheet, Zinc-Coated (Galvanized) or Zinc-Iron Alloy-Coated (Galvannealed) by the Hot-Dip Process
3. ASTM A924/A924M - Standard Specification for General Requirements for Steel Sheet, Metallic-Coated by the Hot-Dip Process
4. ASTM A1008/A1008M - Standard Specification for Steel, Sheet, Cold-Rolled, Carbon, Structural, High-Strength Low-Alloy and High-Strength Low-Alloy with Improved Formability.

B. American Welding Society:
1. AWS D1.1 - Structural Welding Code - Steel.

C. Steel Deck Institute:
1. SDI 29 - Design Manual for Composite Decks, Form Decks and Roof Decks.

D. SSPC: The Society for Protective Coatings:
1. SSPC Paint 15 - Steel Joist Shop Paint.

1.3 PERFORMANCE REQUIREMENTS

A. Design metal deck in accordance with SDI Design Manual.

B. Calculate to maximum structural working stress design of 20,000 psi and maximum vertical deck deflection of 1/360.

C. Design deck with maximum lateral diaphragm deflection of 1/500 of wall height.

1.4 SUBMITTALS

A. Section 01330 - Submittal Procedures: Submittal requirements.

B. Shop Drawings: Indicate deck plan, support locations, Projections, openings and reinforcement, pertinent details, method of welding deck to supporting members, and accessories.

C. Product Data: Submit deck profile characteristics and dimensions, structural properties, finishes, and special conditions.

D. Manufacturer’s Installation Instructions: Submit Manufacturer's installation instructions.

E. Manufacturer’s Certificates: Certify Products meet or exceed specified requirements.

F. Welders Certificates: Certify welders employed on the Work, verifying AWS qualification within previous 12 months.

1.5 QUALIFICATIONS

A. Installer: Company specializing in performing Work of this section with minimum three years documented experience.

B. Design deck layout, spans, fastening, joints, and under direct supervision of Professional Engineer experienced in design of this Work and licensed at Project location, in State of Texas.

1.6 DELIVERY, STORAGE, AND HANDLING

A. Section 01600 - Product Requirements: Product storage and handling requirements.

B. Cut plastic wrap to encourage ventilation.

C. Separate sheets and store deck on dry wood sleepers; slope for positive drainage.

PART 2 - PRODUCTS

2.1 MATERIALS

A. Manufacturers:
   1. United Steel Deck
   2. Vulcraft Steel Deck
   3. Wheeling Corrugating Co.
   4. Substitutions: Section 01600 - Product Requirements.

B. Sheet Steel: ASTM A653, Grade 33 Structural Quality; with G90 galvanized coating conforming to ASTM A525.

C. Bearing Plates and Angles: ASTM A36 steel, galvanized coating.

D. Welding Materials: AWS D1.1.

E. Touch-Up Primer for Galvanized Surfaces: SSPC 20 Type I - Inorganic.

2.2 ACCESSORIES

A. Flute Closures: Closed cell , 1 ½" inch thick; profiled to fit tight to deck.

B. Valley Strips, and Eave Strips: Fabricated of metal of same type and finish as deck.

2.3 FABRICATION

A. Metal Deck: Sheet steel, configured as follows:
1. Span Design: double
2. Minimum Metal Thickness Excluding Finish: 20 gage
3. Nominal Height: 1-1/2 inch, fluted profile to SDI WR
4. Formed Sheet Width: 32 or 36 inch
5. Side Joints: lapped
6. Flute Sides: plain vertical face.

B. Related Deck Accessories: Metal closure strips, cover plates, 20 gage thick galvanized sheet steel; of profile and size required.

C. Cant Strips: Formed sheet steel, 20 gage thick, 45 degree slope, 3 1/2 inch nominal width and height, flange for attachment.

D. Weld Washers: Mild steel, uncoated, 3/4 inch outside diameter, 1/8 inch thick.

PART 3 - EXECUTION

3.1 EXAMINATION

A. Section 01300 - Administrative Requirements: Coordination and project conditions.

3.2 INSTALLATION

A. Erect metal deck in accordance with SDI Manual.

B. Bear deck on masonry or concrete support surfaces with 4 inch minimum bearing. Align and level.

C. Bear deck on steel supports with 1-1/2 inch minimum bearing. Align and level. Deck sheets shall extend over three or more spans, where possible. End laps of sheets shall be a minimum of 2" and shall occur over supports.

D. Fasten deck to steel support members at ends and intermediate supports with fusion welds through weld washers at 12 inches oc maximum, parallel with deck flute and at each transverse flute.

E. Weld in accordance with AWS D1.1.

F. Mechanically fasten male/female side laps at 18 inches oc maximum.

G. Damaged or bent sections, or sections which do not properly mesh together at the side laps, shall not be used.

H. Seal deck joints, laps, ends, and penetrations with sealant to achieve permanent air seal consistent with air barrier system specified in Section 07900.

I. Reinforce steel deck openings from 6 to 18 inches in size with 2 x 2 x 1/4 inch steel angles. Place framing angles perpendicular to flutes; extend minimum two flutes beyond each side of opening and fusion weld to deck at each flute.

J. Install 6 inch minimum wide sheet steel cover plates, of same thickness as deck, where deck changes direction. Fusion weld 12 inches oc maximum.

K. Install sheet steel closures and angle flashings to close openings between deck and walls, columns, and openings.

L. Install double row of foam flute closures above walls and partitions perpendicular to deck flutes and also include metal closure strips at exterior wall.

M. Position roof sump pans with flange bearing on top surface of deck. Fusion weld at each deck flute.

N. Place metal cant strips in position and fusion weld.

O. Immediately after welding deck and other metal components in position, coat welds, burned areas, and damaged surface coating, with touch-up prime paint.

3.3 TOUCH-UP PAINTING

A. After decking installation, wire brush, clean and paint scarred areas, welds and rust spots on top and bottom surfaces of decking units and supporting steel members.

B. Touch-up galvanized surfaces with galvanizing repair paint applied in accordance with Manufacturer's instructions.

C. Touch-up painted surfaces with same type of shop paint used on adjacent surfaces.

3.4 ACCEPTANCE

Contractor shall notify the structural engineer when steel deck installation is complete to permit observation prior to placement of insulation or roofing substrate.

END OF SECTION

SECTION 05400

COLD-FORMED METAL FRAMING

PART 1 - GENERAL

1.1 SUMMARY

A. Section includes load bearing formed steel stud exterior wall and interior wall framing; and bridging.

B. Related Sections: Drawings and general provisions of the Contract, including General and Supplementary Conditions and Division 1 Specification Sections, apply to this Section.
1. Section 04820 – Reinforced Masonry Assemblies
2. Section 06114 - Wood Blocking and Curbing: Rough wood blocking
3. Section 07213 - Batt Insulation: Insulation within framing members
4. Section 07260 - Vapor Retarders
5. Section 09111 - Non-Load Bearing Metal Framing System
6. Section 09260 - Gypsum Board Assemblies: Light weight, non-load bearing metal stud framing.

1.2 REFERENCES

A. American Iron and Steel Institute:
1. AISI SG-973 - Cold-Formed Steel Design Manual.

B. ASTM International:
1. ASTM A123/A123M - Standard Specification for Zinc (Hot-Dip Galvanized) Coatings on Iron and Steel Products
2. ASTM A653/A653M - Standard Specification for Steel Sheet, Zinc-Coated (Galvanized) or Zinc-Iron Alloy-Coated (Galvannealed) by the Hot-Dip Process
3. ASTM A1008/A1008M - Standard Specification for Steel, Sheet, Cold-Rolled, Carbon, Structural, High-Strength Low-Alloy and High-Strength Low-Alloy with Improved Formability
4. ASTM A1011/A1011M - Standard Specification for Steel, Sheet and Strip, Hot-Rolled, Carbon, Structural, High-Strength Low-Alloy and High-Strength Low-Alloy with Improved Formability
5. ASTM C955 - Standard Specification for Load-Bearing (Transverse and Axial) Steel Studs, Runners (Tracks), and Bracing or Bridging for Screw Application of Gypsum Panel Products and Metal Plaster Bases.

C. American Welding Society:
1. AWS D1.1 - Structural Welding Code - Steel
2. AWS D1.3 - Structural Welding Code - Sheet Steel.

D. National Association of Architectural Metal Manufacturers:

1. NAAMM ML/SFA 540 - Lightweight Steel Framing Systems Manual.

E. SSPC: The Society for Protective Coatings:
1. SSPC Paint 20 - Zinc-Rich Primers (Type I - Inorganic and Type II - Organic).

F. Steel Stud Manufacturers Association:
1. SSMA - Product Technical Information.

1.3 SUBMITTALS

A. Section 01330 - Submittal Procedures: Submittal requirements.

B. Shop Drawings: Show layout, spacings, sizes, thicknesses, and types of cold-formed metal framing; fabrication; and fastening and anchorage details, including mechanical fasteners. Show reinforcing channels, opening framing, supplemental framing, strapping, bracing, bridging, splices, accessories, connection details, and attachment to adjoining work.

C. Product Data: Submit data on standard framing members; describe materials and finish, product criteria, and limitations.

D. Manufacturer's Installation Instructions: Submit special procedures, perimeter conditions and requiring special attention.

E. Mill Certifications: Submit mill certifications for steel delivered to site. Certify steel bare metal thickness in 0.001 inch, yield strength, tensile strength, total elongation in 2 inch or 8 inch gauge length, chemical analysis, and galvanized coating thickness.

F. Qualifications Data: For Installer of products.

1.4 QUALITY ASSURANCE

A. Calculate structural properties of framing members in accordance with AISI SG-973 Specification for Design of Cold-Formed Steel Structural Members.

B. Furnish framing materials in accordance with SSMA - Product Technical Information.

C. Maintain one copy copies on site.

D. Welding: Qualify procedures and personnel according to AWS D1.1/D1.1M, "Structural Welding Code--Steel," and AWS D1.3, "Structural Welding Code--Sheet Steel."

E. AISI Specifications and Standards: Comply with AISI's "North American Specification for the Design of Cold-Formed Steel Structural Members" and its "Standard for Cold-Formed Steel Framing - General Provisions."
1. Comply with AISI's "Standard for Cold-Formed Steel Framing - Header Design."

F. Preinstallation Conference: Conduct conference at Project site to comply with requirements in Division 1 Section "Project Management and Coordination."

1.5 QUALIFICATIONS

A. Manufacturer: Company specializing in manufacturing products specified in this section with minimum three years documented experience.
   1. Current member of Steel Stud Manufacturers Association.

B. Installer: Company specializing in performing Work of this section with minimum three years documented experience.

C. Form, fabricate, provide, and connect components in accordance with NAAMM ML/SFA 540 - Lightweight Steel Framing Systems Manual.

1.6 MOCKUP

A. Section 01400 - Quality Requirements: Mockup requirements.

B. Construct exterior framed wall including corner condition mockup, including insulation, sheathing, door frame, and interior and exterior finish specified in other sections. Coordinate with installation of associated Work of Sections.

C. Locate where directed by Architect/Engineer.

D. Retain accepted mockup as completed Work.

1.7 COORDINATION

A. Section 01300 - Administrative Requirements: Coordination and project conditions.

B. Coordinate placement of components within stud framing system

1.8 DELIVERY, STORAGE, AND HANDLING

A. Protect cold-formed metal framing from corrosion, deformation, and other damage during delivery, storage, and handling.

B. Store cold-formed metal framing, protect with a waterproof covering, and ventilate to avoid condensation.

PART 2 - PRODUCTS

2.1 COLD-FORMED METAL FRAMING

A. Manufacturers:
   1. Clark Steel Framing Systems
   2. Dale / Incor
   3. Dietrich Metal Framing
   4. Steel Construction Systems
   5. Substitutions: Section 01600 - Product Requirements.

2.2 MATERIALS

A. Steel Sheet: ASTM A 1003/A 1003M, Structural Grade, Type H, metallic coated, of grade and coating weight as follows:
   1. Grade: ST50H
   2. Coating: G90.

B. Steel Sheet for Vertical Deflection Clips: ASTM A 653/A 653M, structural steel, zinc coated, of grade and coating as follows:
   1. Grade: 50, Class 1 or 2
   2. Coating: G90.

2.3 EXTERIOR NON-LOAD-BEARING WALL FRAMING

A. Steel Studs: Manufacturer's standard C-shaped steel studs, of web depths indicated, punched, with stiffened flanges, and as follows:
   1. Minimum Base-Metal Thickness: 0.0428 inch
   2. Flange Width: 1-5/8 inches.

B. Steel Track: Manufacturer's standard U-shaped steel track, of web depths indicated, unpunched, with unstiffened flanges, and as follows:
   1. Minimum Base-Metal Thickness: 0.0428 inch or greater than stud thickness where the track is to be installed
   2. Flange Width: 1-1/4 inches.

C. Vertical Deflection Clips: Manufacturer's standard head clips, capable of accommodating upward and downward vertical displacement of primary structure through positive mechanical attachment to stud web.
   1. Slip-Type slotted head track, Deflection Track: Steel sheet top runner manufactured to prevent cracking of finishes applied to interior partition framing resulting from deflection of structure above; in thickness not less than indicated for studs and in width to accommodate depth of studs.
      a. Standard leg 2 ½” with 1 ½” slot

2.4 FRAMING ACCESSORIES

A. Fabricate steel-framing accessories from steel sheet, ASTM A 1003/A 1003M, Structural Grade, Type H, metallic coated, of same grade and coating weight used for framing members.

B. Provide accessories of manufacturer's standard thickness and configuration, unless otherwise indicated, as follows:
   1. Supplementary framing
   2. Bracing, bridging, and solid blocking
   3. Anchor clips
   4. Stud kickers, knee braces, and girts
   5. Hole reinforcing plates
   6. Backer plates.

2.5 ANCHORS, CLIPS, AND FASTENERS

A. Steel Shapes and Clips: ASTM A 36/A 36M, zinc coated by hot-dip process according to ASTM A 123/A 123M.

B. Power-Actuated Anchors: Fastener system of type suitable for application indicated, fabricated from corrosion-resistant materials, with capability to sustain, without failure, a load equal to 10 times design load, as determined by testing per ASTM E 1190 conducted by a qualified independent testing agency.

C. Mechanical Fasteners: ASTM C 1513, corrosion-resistant-coated, self-drilling, self-tapping steel drill screws.
   1. Head Type: Low-profile head beneath sheathing, Manufacturer's standard elsewhere.

D. Welding Electrodes: Comply with AWS standards.

2.6 MISCELLANEOUS MATERIALS

A. Galvanizing Repair Paint: SSPC-Paint 20 or DOD-P-21035.

B. Shims: Load bearing, high-density multimonomer plastic, nonleaching.

C. Sealer Gaskets: Closed-cell neoprene foam, 1/4 inch thick, selected from Manufacturer's standard widths to match width of bottom track or rim track members.

2.7 FABRICATION

A. Fabricate cold-formed metal framing and accessories plumb, square, and true to line, and with connections securely fastened, according to referenced AISI's specifications and standards, Manufacturer's written instructions, and requirements in this Section.
   1. Fabricate framing assemblies using jigs or templates.
   2. Cut framing members by sawing or shearing; do not torch cut.
   3. Fasten cold-formed metal framing members by welding, screw fastening, clinch fastening, or riveting as standard with fabricator. Wire tying of framing members is not permitted.
      a. Comply with AWS D1.3 requirements and procedures for welding, appearance and quality of welds, and methods used in correcting welding work.
      b. Locate mechanical fasteners and install according to Shop Drawings, with screw penetrating joined members by not less than three exposed screw threads.
   4. Fasten other materials to cold-formed metal framing by welding, bolting, or screw fastening, according to Shop Drawings.

B. Reinforce, stiffen, and brace framing assemblies to withstand handling, delivery, and erection stresses. Lift fabricated assemblies to prevent damage or permanent distortion.

C. Fabrication Tolerances: Fabricate assemblies level, plumb, and true to line to a maximum allowable tolerance variation of 1/8 inch in 10 feet and as follows:
   1. Spacing: Space individual framing members no more than plus or minus 1/8 inch from plan location. Cumulative error shall not exceed minimum fastening requirements of sheathing or other finishing materials.
   2. Squareness: Fabricate each cold-formed metal framing assembly to a maximum out-of-square tolerance of 1/8 inch.

PART 3 - EXECUTION

3.1 EXAMINATION

A. Section 01300 - Administrative Requirements: Coordination and project conditions.

B. Verify building framing components are ready to receive Work.

C. Verify rough-in utilities are in proper location.

D. Examine supporting substrates and abutting structural framing for compliance with requirements for installation tolerances and other conditions affecting performance.
   1. Proceed with installation only after unsatisfactory conditions have been corrected.

3.2 INSTALLATION, GENERAL

A. Cold-formed metal framing may be shop or field fabricated for installation, or it may be field assembled.

B. Install cold-formed metal framing according to AISI's "Standard for Cold-Formed Steel Framing - General Provisions" and to Manufacturer's written instructions unless more stringent requirements are indicated.

C. Install shop- or field-fabricated, cold-formed framing and securely anchor to supporting structure.
   1. Screw, bolt, or weld wall panels at horizontal and vertical junctures to produce flush, even, true-to-line joints with maximum variation in plane and true position between fabricated panels not exceeding 1/16 inch.
   2. Provide a sill sealer or gasket barrier between all concrete and steel connections.

D. Install cold-formed metal framing and accessories plumb, square, and true to line, and with connections securely fastened.
   1. Cut framing members by sawing or shearing; do not torch cut.
   2. Fasten cold-formed metal framing members by welding, screw fastening, clinch fastening, or riveting. Wire tying of framing members is not permitted.
      a. Comply with AWS D1.3 requirements and procedures for welding, appearance and quality of welds, and methods used in correcting welding work.

b. Locate mechanical fasteners and install according to Shop Drawings, and complying with requirements for spacing, edge distances, and screw penetration.

E. Install framing members in one-piece lengths unless splice connections are indicated for track or tension members.

F. Construct corners using minimum three studs. Double stud wall openings, door jambs, and window jambs.

G. Install temporary bracing and supports to secure framing and support loads comparable in intensity to those for which structure was designed. Maintain braces and supports in place, undisturbed, until entire integrated supporting structure has been completed and permanent connections to framing are secured.

H. Do not bridge building control joints with cold-formed metal framing. Independently frame both sides of joints.

I. Install insulation, specified in Division 7 Section "Building Insulation," in built-up exterior framing members, such as headers, sills, boxed joists, and multiple studs at openings, that are inaccessible on completion of framing work.

J. Fasten hole reinforcing plate over web penetrations that exceed size of Manufacturer's standard punched openings.

3.3 EXTERIOR NON-LOAD-BEARING WALL INSTALLATION

A. Install continuous tracks sized to match studs. Align tracks accurately and securely anchor to supporting structure as indicated.

B. Fasten both flanges of studs to bottom track, unless otherwise indicated. Space studs as follows:
1. Stud Spacing: 16 inches unless noted otherwise.

C. Set studs plumb, except as needed for diagonal bracing or required for nonplumb walls or warped surfaces and similar requirements.

D. Isolate non-load-bearing steel framing from building structure to prevent transfer of vertical loads while providing lateral support.
1. Connect vertical deflection clips to infill studs and anchor to building structure.

E. Install horizontal bridging in wall studs, spaced in rows indicated on Shop Drawings but not more than 48 inches apart. Fasten at each stud intersection.
1. Bridging: Proprietary bridging bars installed according to Manufacturer's written instructions.

F. Install miscellaneous framing and connections, including stud kickers, web stiffeners, clip angles, continuous angles, anchors, fasteners, and stud girts, to provide a complete and stable wall-framing system.

3.4 ERECTION TOLERANCES

A. Section 01400 - Quality Requirements: Tolerances.

B. Erection Tolerances: Install cold-formed metal framing level, plumb, and true to line to a maximum allowable tolerance variation of 1/8 inch in 10 feet and as follows:

C. Space individual framing members no more than plus or minus 1/8 inch from plan location. Cumulative error shall not exceed minimum fastening requirements of sheathing or other finishing materials.

3.5 REPAIRS AND PROTECTION

A. Galvanizing Repairs: Prepare and repair damaged galvanized coatings on fabricated and installed cold-formed metal framing with galvanized repair paint according to ASTM A 780 and Manufacturer's written instructions.

B. Provide final protection and maintain conditions, in a manner acceptable to Manufacturer and Installer, that ensure that cold-formed metal framing is without damage or deterioration at time of Substantial Completion.

END OF SECTION

SECTION 05500

METAL FABRICATIONS

PART 1 - GENERAL

1.1 SUMMARY

A. Section includes shop fabricated metal items:
1. Loose steel Lintels
2. Steel framing and supports for overhead doors
3. Loose bearing and leveling plates
4. Ledge and shelf angles
5. Steel framing and supports for mechanical and electrical equipment
6. Channel door frames
7. Pipe Bollards
8. Metal floor plates and supports
9. Metal roof walkways
10. Steel weld plates and angles for casting into concrete not specified in other Sections
11. Steel framing and supports for applications where framing and supports are not specified in other Sections.

B. Related Sections:
1. Section 09900 - Paints and Coatings: Field applied paint finish
2. Section 03300 - Cast-In-Place Concrete: Execution requirements for embedded anchors and attachments for metal fabrications specified by this section
3. Section 04810 - Unit Masonry Assemblies: Execution requirements for embedded anchors and attachments for metal fabrications specified by this section in masonry.

1.2 REFERENCES

A. American Architectural Manufacturers Association:
1. AAMA 611 - Voluntary Specification for Anodized Architectural Aluminum.

B. ASTM International:
1. ASTM A36/A36M - Standard Specification for Carbon Structural Steel
2. ASTM A53/A53M - Standard Specification for Pipe, Steel, Black and Hot-Dipped, Zinc-Coated, Welded and Seamless
3. ASTM A123/A123M - Standard Specification for Zinc (Hot-Dip Galvanized) Coatings on Iron and Steel Products
4. ASTM A153/A153M - Standard Specification for Zinc Coating (Hot-Dip) on Iron and Steel Hardware
5. ASTM A283/283M - Standard Specification for Low and Intermediate Tensile Strength Carbon Steel Plates
6. ASTM A500 - Standard Specification for Cold-Formed Welded and Seamless Carbon Steel Structural Tubing in Rounds and Shapes

7. ASTM A501 - Standard Specification for Hot-Formed Welded and Seamless Carbon Steel Structural Tubing.

C. American Welding Society:
1. AWS A2.4 - Standard Symbols for Welding, Brazing, and Nondestructive Examination
2. AWS D1.1 - Structural Welding Code - Steel
3. AWS D1.6 - Structural Welding Code - Stainless Steel.

D. National Ornamental & Miscellaneous Metals Association:
1. NOMMA Guideline 1 - Joint Finishes.

E. SSPC: The Society for Protective Coatings:
1. SSPC - Steel Structures Painting Manual
2. SSPC SP 1 - Solvent Cleaning
3. SSPC Paint 15 - Steel Joist Shop Paint
4. SSPC Paint 20 - Zinc-Rich Primers (Type I - Inorganic and Type II - Organic).

1.3 SUBMITTALS

A. Section 01330 - Submittal Procedures: Submittal requirements.

B. Product Data: For the following:
1. Paint products
2. Grout.

C. Shop Drawings: Indicate profiles, sizes, connection attachments, reinforcing, anchorage, size and type of fasteners, and accessories.
1. Include erection drawings, elevations, and details where applicable. Show anchorage and accessory items. Indicate welded connections using standard AWS A2.0 welding symbols. Indicate net weld lengths.
2. Provide templates for anchors and bolts specified for installation under other Sections.

D. Welders Certificates: Certify welders employed on the Work, verifying AWS qualification within previous 12 months.

1.4 QUALITY ASSURANCE

A. Finish joints in accordance with NOMMA Guideline 1.

B. Perform Work in accordance with governing codes and regulations.

C. Maintain one copy copies of document on site.

1.5 QUALIFICATIONS

A. Installer: Company specializing in performing Work of this section with minimum three years documented experience.

B. Design under direct supervision of Professional Engineer experienced in design of this Work and licensed in State of Texas.

C. Welding: Qualify procedures and personnel according to the following:
   1. AWS D1.1, "Structural Welding Code--Steel"
   2. AWS D1.3, "Structural Welding Code--Sheet Steel."

1.6 DELIVERY, STORAGE, AND HANDLING

A. Section 01600 - Product Requirements: Product storage and handling requirements.

B. Accept metal fabrications on site in labeled shipments. Inspect for damage.

C. Protect metal fabrications from damage by exposure to weather.

1.7 FIELD MEASUREMENTS

A. Field Measurements: Verify actual locations of walls and other construction contiguous with metal fabrications by field measurements before fabrication and indicate measurements on Shop Drawings.
   1. Established Dimensions: Where field measurements cannot be made without delaying the Work, establish dimensions and proceed with fabricating metal fabrications without field measurements. Coordinate wall and other contiguous construction to ensure that actual dimensions correspond to established dimensions.
   2. Provide allowance for trimming and fitting at site.

1.8 COORDINATION

A. Coordinate installation of anchorages for metal fabrications. Furnish setting drawings, templates, and directions for installing anchorages, including sleeves, concrete inserts, anchor bolts, and items with integral anchors, that are to be embedded in concrete or masonry. Deliver such items to Project site in time for installation.

B. Coordinate installation of steel weld plates and angles for casting into concrete that are specified in this Section but required for work of another Section. Deliver such items to Project site in time for installation.

PART 2 - PRODUCTS

2.1 METALS, GENERAL

A. Metal Surfaces, General: Provide materials with smooth, flat surfaces, unless otherwise indicated. For metal fabrications exposed to view in the completed Work, provide materials without seam marks, roller marks, rolled trade names, or blemishes.

2.2 MATERIALS - STEEL

A. Ferrous Materials:
1. Steel Sections: ASTM A36/A36M
2. Steel Tubing: ASTM A500, Grade B or ASTM A501
3. Plates: ASTM A283/A283M
4. Pipe: ASTM A53/A53M, Grade B Schedule.

B. Fasteners: General.

C. Bolts, Nuts, and Washers: A307 galvanized to ASTM A153/A153M for galvanized components.

D. Welding Materials: AWS D1.1; type required for materials being welded.

E. Touch-Up Primer for Galvanized Surfaces: SSPC Paint 20 Type II Organic zinc rich.

2.3 MATERIALS - STAINLESS STEEL

A. Bars and Shapes: ASTM A276; Type 302, 304, or 316

B. Tubing: ASTM A554; Type 316

C. Pipe: ASTM A312/A312M

D. Plate, Sheet and Strip: ASTM A167; Type 316

E. Bolts, Nuts, and Washers: ASTM A354

F. Welding Materials: AWS D1.6; type required for materials being welded.

2.4 LINTELS

A. Fabricate loose steel lintels from steel angles and shapes of size indicated for openings and recesses in masonry walls and partitions at locations indicated. Weld adjoining members together to form a single unit where indicated.

B. Lintels: Steel sections, size and configuration as indicated on Drawings, length to allow 8 inches minimum bearing on both sides of opening.
1. Exterior Locations: Galvanized
2. Interior Locations: Prime paint, one coat.

2.5 LEDGE AND SHELF ANGLES

A. Ledge and Shelf Angles, Channels and Plates Not Attached to Structural Framing: For support of masonry; galvanized.

2.6 DOOR FRAMES

A. Door Frames: Steel channel sections, size indicated on Drawings, with jamb anchors suitable for attachment to steel framing, minimum 4 anchors per jamb; galvanized.

2.7 BOLLARDS

A. Bollards: Steel pipe, concrete filled, crowned cap, 6 inches diameter, length as indicated on Drawings; galvanized, prime paint, one coat.

B. Concrete Fill: 3,000 psi as specified in Section 03300.

C. Anchors: Concealed type.

2.8 STRUCTURAL SUPPORTS

A. Other Structural Supports: Steel sections, shape and size required to support applied loads with maximum deflection of 1/240 of the span; prime paint, one coat.

2.9 ANCHOR BOLTS

A. Anchor Bolts: ASTM A307; 3/4 inch steel bolt, standard J-hook, with nut and washer; unfinished.

B. Anchor Bolts: Metal building anchor bolts by Pre-Engineered Metal Building supplier.

2.10 UNISTRUT METAL ROOFWALK

A. Anti-Skid surfaced grating shall conform to Federal Specification RR-G-1602A.

B. The Grating shall be designed to withstand the following load criteria:
1. Uniform Live Load 500 psf
2. Concentrated Load 1000 lbs.

C. Contractor shall certify that grating has been tested, indicating maximum allowable uniform and concentrated loads, with a factor of safety of 2, per AISC, Section 6.

D. Provide products from the following Manufacturer or an approved equal: Unistrut Corporation (United Interlock Grating)

E. Grating shall be United Interlock Plank Grating System, as manufactured by Unistrut Corporation, 35660 Clinton Street, Wayne, Michigan 48184.

F. Materials shall conform to ASTM A653, Grade A with a Class G-90 coating.

G. Panels will be installed with a leg height of 2-1/2 inches.

H. The surface pattern shall provide a minimum of 35% but not more than 42% open area. Openings shall be a minimum of 4" long and a maximum of 3/4” width.

I. Grating shall be installed as detailed on the approved shop drawings.

J. Grating shall be installed in single, unspliced sections for all requirements to 20' lengths.

K. Grating shall interlock, with male-female legs providing a lock prohibiting horizontal movement. The outside leg of all members shall be male.

L. Connections of grating to support elements shall be by clamping with LM Curbs S-5 Utility clamps.

2.11 FABRICATION

A. Fit and shop assemble items in largest practical sections, for delivery to site.

B. Fabricate items with joints tightly fitted and secured.

C. Continuously seal joined members by continuous welds.

D. Grind exposed joints flush and smooth with adjacent finish surface. Make exposed joints butt tight, flush, and hairline. Ease exposed edges to small uniform radius.

E. Exposed Mechanical Fastenings: Flush countersunk screws or bolts; unobtrusively located; consistent with design of component, except where specifically noted otherwise.

F. Supply components required for anchorage of fabrications. Fabricate anchors and related components of same material and finish as fabrication, except where specifically noted otherwise.

2.12 FACTORY APPLIED FINISHES - STEEL

A. Clean surfaces of rust, scale, grease, and foreign matter prior to finishing.

B. Do not prime surfaces in direct contact with concrete or where field welding is required.

C. Prime paint items with two coats except where galvanizing is specified.

D. Galvanized Structural Steel Members: Galvanize after fabrication to ASTM A123. Furnish minimum 1.25 oz/sq ft galvanized coating.

E. Galvanized Non-structural Items: Galvanized after fabrication to ASTM A123. Furnish minimum 1.25 oz/sq ft galvanized coating.

2.13 FACTORY APPLIED FINISHES - STAINLESS STEEL

A. Satin Polished Finish: Number 4, satin directional polish parallel with long dimension of finished face.

2.14 FACTORY APPLIED FINISHES - ALUMINUM

A. Exterior Aluminum Surfaces: AAMA A41 anodized, prepared with pre-treatment, anodized to clear color.

B. Interior Aluminum Surfaces: AAMA A41 anodized, prepared with pre-treatment, anodized to clear color.

C. Apply one coat coats of bituminous paint to concealed aluminum surfaces in contact with cementitious or dissimilar materials.

2.15 FASTENERS

A. General: Unless otherwise indicated, provide Type 304 or 316 stainless-steel fasteners for exterior use and zinc-plated fasteners with coating complying with ASTM B 633, Class Fe/Zn 5, at exterior walls. Provide stainless-steel fasteners for fastening aluminum. Select fasteners for type, grade, and class required.

B. Steel Bolts and Nuts: Regular hexagon-head bolts, ASTM A 307, Grade A; with hex nuts, ASTM A 563; and, where indicated, flat washers.

C. Stainless-Steel Bolts and Nuts: Regular hexagon-head annealed stainless-steel bolts, nuts and, where indicated, flat washers; ASTM F 593 for bolts and ASTM F 594 for nuts, Alloy Group 1 for type 304 and for type 316.

D. Anchor Bolts: ASTM F 1554, Grade 36.
   1. Provide hot-dip or mechanically deposited, zinc-coated anchor bolts where item being fastened is indicated to be galvanized.

E. Eyebolts: ASTM A 489.

F. Machine Screws: ASME B18.6.3.

G. Lag Bolts: ASME B18.2.1.

H. Wood Screws: Flat head, ASME B18.6.1.

I. Plain Washers: Round, ASME B18.22.1.

J. Lock Washers: Helical, spring type, ASME B18.21.1.

K. Cast-in-Place Anchors in Concrete: Anchors capable of sustaining, without failure, a load equal to four times the load imposed, as determined by testing according to ASTM E 488, conducted by a qualified independent testing agency.
   1. Threaded or wedge type; galvanized ferrous castings, either ASTM A 47/A 47M malleable iron or ASTM A 27/A 27M cast steel. Provide bolts, washers, and shims as needed, hot-dip galvanized per ASTM A 153/A 153M.

L. Expansion Anchors: Anchor bolt and sleeve assembly with capability to sustain, without failure, a load equal to six times the load imposed when installed in unit masonry and four times the load imposed when installed in concrete, as determined by testing according to ASTM E 488, conducted by a qualified independent testing agency.
   1. Material for Anchors in Interior Locations: Carbon-steel components zinc-plated to comply with ASTM B 633, Class Fe/Zn 5.
   2. Material for Anchors in Exterior Locations: Alloy Group 1 for type 304 and for type 316 stainless-steel bolts complying with ASTM F 593 and nuts complying with ASTM F 594.

2.16 MISCELLANEOUS MATERIALS

A. Welding Rods and Bare Electrodes: Select according to AWS specifications for metal alloy welded.

B. Shop Primers: Provide primers that comply with Division 9 painting Sections.

C. Galvanizing Repair Paint: High-zinc-dust-content paint for regalvanizing welds in steel, complying with SSPC-Paint 20.

D. Bituminous Paint: Cold-applied asphalt emulsion complying with ASTM D 1187.

E. Nonshrink, Metallic Grout: Factory-packaged, ferrous-aggregate grout complying with ASTM C 1107, specifically recommended by Manufacturer for heavy-duty loading applications.

F. Nonshrink, Nonmetallic Grout: Factory-packaged, nonstaining, noncorrosive, nongaseous grout complying with ASTM C 1107. Provide grout specifically recommended by Manufacturer for interior and exterior applications.

G. Concrete Materials and Properties: Comply with requirements in Division 3 Section "Cast-in-Place Concrete" for normal-weight, air-entrained, ready-mix concrete with a minimum 28-day compressive strength of 3000 psi , unless otherwise indicated.

2.17 FABRICATION TOLERANCES

A. Squareness: 1/8 inch maximum difference in diagonal measurements.

B. Maximum Offset Between Faces: 1/16 inch.

C. Maximum Misalignment of Adjacent Members: 1/16 inch.

D. Maximum Bow: 1/8 inch in 48 inches.

E. Maximum Deviation From Plane: 1/16 inch in 48 inches.

PART 3 - EXECUTION

3.1 EXAMINATION

A. Section 01300 - Administrative Requirements: Coordination and project conditions.

B. Verify field conditions are acceptable and are ready to receive Work.

3.2 PREPARATION

A. Clean and strip primed steel items to bare metal and aluminum where site welding is required.

B. Supply steel items required to be cast into concrete or embedded in masonry with setting templates to appropriate sections.

3.3 INSTALLATION

A. Install items plumb and level, accurately fitted, free from distortion or defects.

B. Make provisions for erection stresses. Install temporary bracing to maintain alignment, until permanent bracing and attachments are installed.

C. Field weld components indicated on shop drawings.

D. Perform field welding in accordance with AWS D1.1.

E. Obtain approval of Architect/Engineer prior to site cutting or making adjustments not scheduled.

F. After erection, touch up welds, abrasions, and damaged finishes with prime paint or galvanizing repair paint to match shop finishes.

3.4 INSTALLATION, GENERAL

A. Cutting, Fitting, and Placement: Perform cutting, drilling, and fitting required for installing metal fabrications. Set metal fabrications accurately in location, alignment, and elevation; with edges and surfaces level, plumb, true, and free of rack; and measured from established lines and levels.

B. Fit exposed connections accurately together to form hairline joints. Weld connections that are not to be left as exposed joints but cannot be shop welded because of shipping size limitations. Do not weld, cut, or abrade surfaces of exterior units that have been hot-dip galvanized after fabrication and are for bolted or screwed field connections.

C. Field Welding: Comply with the following requirements:
   1. Use materials and methods that minimize distortion and develop strength and corrosion resistance of base metals.
   2. Obtain fusion without undercut or overlap.

3. Remove welding flux immediately.
4. At exposed connections, finish exposed welds and surfaces smooth and blended so no roughness shows after finishing and contour of welded surface matches that of adjacent surface.

D. Fastening to In-Place Construction: Provide anchorage devices and fasteners where metal fabrications are required to be fastened to in-place construction. Provide threaded fasteners for use with concrete and masonry inserts, toggle bolts, through bolts, lag bolts, wood screws, and other connectors.

E. Provide temporary bracing or anchors in formwork for items that are to be built into concrete, masonry, or similar construction.

3.5 INSTALLING MISCELLANEOUS FRAMING AND SUPPORTS

A. General: Install framing and supports to comply with requirements of items being supported, including Manufacturers' written instructions and requirements indicated on Shop Drawings.

3.6 INSTALLING BEARING AND LEVELING PLATES

A. Clean concrete and masonry bearing surfaces of bond-reducing materials, and roughen to improve bond to surfaces. Clean bottom surface of plates.

B. Set bearing and leveling plates on wedges, shims, or leveling nuts. After bearing members have been positioned and plumbed, tighten anchor bolts. Do not remove wedges or shims but, if protruding, cut off flush with edge of bearing plate before packing with grout.
1. Use nonshrink grout, either metallic or nonmetallic, in concealed locations where not exposed to moisture; use nonshrink, nonmetallic grout in exposed locations, unless otherwise indicated.
2. Pack grout solidly between bearing surfaces and plates to ensure that no voids remain.

3.7 INSTALLING METAL BOLLARDS

A. Anchor bollards in place with concrete footings. Center and align bollards in holes 3 inches above bottom of excavation. Place concrete and vibrate or tamp for consolidation. Support and brace bollards in position until concrete has cured.

B. Fill bollards solidly with concrete, mounding top surface to shed water.

3.8 ADJUSTING AND CLEANING

A. Touchup Painting: Immediately after erection, clean field welds, bolted connections, and abraded areas. Paint uncoated and abraded areas with the same material as used for shop painting to comply with SSPC-PA 1 for touching up shop-painted surfaces.
1. Apply by brush or spray to provide a minimum 2.0-mil dry film thickness.

B. Touchup Painting: Cleaning and touchup painting of field welds, bolted connections, and abraded areas of shop paint are specified in Division 9 painting Sections.

C. Galvanized Surfaces: Clean field welds, bolted connections, and abraded areas and repair galvanizing to comply with ASTM A 780.

3.9 ERECTION TOLERANCES

A. Section 01400 - Quality Requirements: Tolerances.

B. Maximum Variation From Plumb: 1/4 inch for every 12 ft in height, non-cumulative.

C. Maximum Offset From Alignment: 1/4 inch.

D. Maximum Out-of-Position: 1/4 inch.

END OF SECTION

SECTION 06114

WOOD BLOCKING AND CURBING

PART 1 - GENERAL

1.1 SUMMARY

A. Section includes blocking in wall openings; wood furring and grounds; telephone and electrical panel back boards; concealed wood blocking for support of toilet and bath accessories, wall cabinets, wood trim; and preservative treatment of wood.

B. Related Sections:
   1. Section 08520: Aluminum Window and Door openings to receive wood blocking
   2. Section 10800: Toilet Accessories

1.2 REFERENCES

A. American National Standards Institute:
   1. ANSI A208.1 - Mat-Formed Wood Particleboard.

B. American Wood-Preservers' Association:
   1. AWPA C1 - All Timber Products - Preservative Treatment by Pressure Process
   2. AWPA C20 - Structural Lumber - Fire-Retardant Treatment by Pressure Processes.

C. National Institute of Standards and Technology:
   1. NIST PS 20 - American Softwood Lumber Standard.

D. Southern Pine Inspection Bureau:
   1. SPIB - Standard Grading Rules for Southern Pine Lumber.

E. West Coast Lumber Inspection Bureau:
   1. WCLIB - Standard Grading Rules for West Coast Lumber.

1.3 SUBMITTALS

A. Section 01330 - Submittal Procedures: Submittal procedures.

B. Manufacturer's Certificate: Certify products meet or exceed specified requirements.

C. Indicate materials and wood species, component profiles, fastening, joining details, finishes and accessories.

D. Research/Evaluation reports: for the following, showing compliance with building code in effect for the Project Site:
   1. Preservative-treated wood
   2. Power-Driven fasteners

3. Powder-Actuated fasteners
4. Expansion anchors.

E. Product Data: Submit technical data on wood preservative and fire retardant treatment materials and application instructions.
1. Include data for wood-preservative treatment from chemical treatment Manufacturer and certification by treating plant that treated materials comply with requirements. Indicate type of preservative used and net amount of preservative retained.
2. For products receiving a waterborne treatment, include statement that moisture content of treated materials was reduced to levels specified before shipment to Project Site.
3. Include copies of warranties from chemical treatment Manufacturers for each type of treatment.

1.4 QUALITY ASSURANCE

A. Perform Work in accordance with the following:
1. Lumber Grading Agency: Certified by NIST PS 20
2. Plywood Grading Agency: Certified by APA/EWA.

B. Rough Carpentry Lumber: Douglas fir or yellow pine meeting the national grading rule for dimension lumber and the design values as determined in accordance with ASTM D245. All lumber shall bear a grade mark stamp of either the West Coast Lumber Inspection Bureau or Southern Pine Inspection Bureau.

1.5 DELIVERY, STORAGE, AND HANDLING

A. Section 01600 - Product Requirements: Product storage and handling requirements.

B. Stack lumber flat with spacers between each bundle to provide air circulation. Provide for air circulation around stacks and under coverings.

C. Do not deliver shop fabricated carpentry items until site conditions are adequate to receive the work. Protect items from weather while in transit.

D. Store indoors, in ventilated areas with a constant minimum temperature of 60 degrees F. maximum relative humidity of 25 to 55 percent.

E. Protect work from moisture damage.

PART 2 - PRODUCTS

2.1 MATERIALS

A. Lumber Grading Rules: SPIB.
1. Factory mark each piece of lumber with grade stamp of grading agency.

B. Miscellaneous Framing: Stress Group, Southern Pine species, No. 1 grade, 15 percent maximum moisture content, pressure preservation treatment.

C. Miscellaneous Blocking: Stress Group, Southern Pine species, No. 2 grade, 15 percent maximum moisture content, pressure preservation treatment.

D. For blocking and nailers used for attachment of other construction, select and cut lumber to eliminate knots and other defects that will interfere with attachment of other work.

E. Plywood: APA/EWA Rated Sheathing Structural I, Grade B-C; Exposure Durability 1.

F. Plywood: APA/EWA Rated Sheathing Structural I, Grade C-D; Exposure Durability 1; unsanded.

2.2 ACCESSORIES

A. Fasteners and Anchors:
1. Fasteners: Hot dipped galvanized steel for exterior, high humidity and treated wood locations, unfinished steel elsewhere: size and type to suit application.
2. Anchors: Toggle bolt type for anchorage to hollow masonry. Expansion shield and lag bolt type for anchorage to solid masonry or concrete. Bolt or ballistic fastener for anchorages to steel.

B. Nails, Brads, and Staples: ASTM F 1667.

C. Power-Driven Fasteners: NES NER-272.

D. Wood Screws: ASME B18.6.1.

E. Screws for Fastening to Cold-Formed Metal Framing: ASTM C 954, except with wafer heads and reamer wings, length as recommended by screw Manufacturer for material being fastened.

F. Lag Bolts: ASME B18.2.1.

G. Bolts: Steel bolts complying with ASTM A 307, Grade A; with ASTM A 563 hex nuts and, where indicated, flat washers. Expansion Anchors: Anchor bolt and sleeve assembly of material indicated below with capability to sustain, without failure, a load equal to 6 times the load imposed when installed in unit masonry assemblies and equal to 4 times the load imposed when installed in concrete as determined by testing per ASTM E 488 conducted by a qualified independent testing and inspecting agency.
1. Material: Stainless steel with bolts and nuts complying with ASTM F 593 and ASTM F 594, Alloy Group 1 or 2.

2.3 FACTORY WOOD TREATMENT

A. Wood Preservative (Pressure Treatment): AWPA C1 using water borne preservative ACQ (Alkaline Copper Quaternary compound) with 0.25 lbs. retention/cubic foot. Each

piece shall be Grade marked and shall show the retention, or the Contractor shall furnish a commercial laboratory inspection.

B. Fire Retardant Treatment: Pressure treatment, AWPA C20 for lumber and AWPA C27 for plywood, Interior Type, chemically treated and pressure impregnated; capable of providing a maximum flame spread/smoke development rating of 25/450. Each piece shall be Grade marked and shall show the retention, or the Contractor shall furnish a commercial laboratory inspection.

PART 3 - EXECUTION

3.1 EXAMINATION

A. Section 01300 - Administrative Requirements: Verification of existing conditions before starting work.

B. Verify substrate conditions are ready to receive blocking, curbing and framing.

3.2 PREPARATION

A. Coordinate placement of blocking, curbing and framing items.

3.3 INSTALLATION

A. Set members level and plumb, in correct position. Install where required for attaching other work, coordinate locations with other work involved.

B. Attach items to substrates to support applied loading. Recess bolts and nuts flush with surfaces, unless noted otherwise.

C. Place horizontal members, crown side up.

D. Construct members of continuous pieces of longest possible lengths.

E. Construct curb members of solid wood sections.

F. Curb roof openings except where prefabricated curbs are provided. Form corners by alternating lapping side members.

G. Space framing and furring 16 inches o.c. or as noted

H. Secure sheathing to framing members with ends over firm bearing and staggered.

I. Install telephone and electrical panel back boards with plywood sheathing material where required. Size back boards 12 inches beyond size of electrical and telephone panel.

3.4 SITE APPLIED WOOD TREATMENT

A. Apply preservative treatment.

B. Brush apply two coats of preservative treatment on wood in contact with cementitious materials, roofing and related metal flashings. Treat site-sawn cuts.

C. Allow preservative to dry prior to erecting members.

3.5 SCHEDULES

A. Blocking: S/P/F species, 15 percent maximum moisture content, pressure preservative treatment, Fire Retardant Treatment.

B. Telephone and Electrical Panel Boards: 3/4 inch thick, square edges, site brush applied preservative treated.

C. Toilet Rooms: S/P/F species, 15 percent maximum moisture content, pressure preservative treatment, Fire Retardant Treatment

END OF SECTION

SECTION 06200

FINISH CARPENTRY

PART 1 - GENERAL

1.1 SUMMARY

A. Section includes finish carpentry items; wood casings and moldings.

B. Related Sections:
1. Section 06114 - Wood Blocking and Curbing: Grounds and support framing
2. Section 06410 - Custom Cabinets: Shop fabricated custom cabinet work
3. Section 09900 - Paints and Coatings: Painting and finishing of finish carpentry items.

1.2 REFERENCES

A. American National Standards Institute:
1. ANSI A135.4 - Basic Hardboard
2. ANSI A156.9 - Cabinet Hardware
3. ANSI A208.1 - Mat-Formed Wood Particleboard.

B. APA-The Engineered Wood Association:
1. APA/EWA PS 1 - Voluntary Product Standard for Construction and Industrial Plywood.

C. Architectural Woodwork Institute:
1. AWI - Quality Standards Illustrated.

D. American Wood-Preservers' Association:
1. AWPA C1 - All Timber Products - Preservative Treatment by Pressure Process.

E. Hardwood Plywood and Veneer Association:
1. HPVA HP-1 - American National Standard for Hardwood and Decorative Plywood.

F. National Institute of Standards and Technology:
1. NIST PS 20 - American Softwood Lumber Standard.

1.3 SUBMITTALS

A. Section 01330 - Submittal Procedures: Submittal procedures.

B. Shop Drawings: Indicate materials, component profiles, fastening methods, jointing details, and accessories, to minimum scale of 1-1/2 inch to 1 ft.
1. Show locations and sizes of furring, blocking, and hanging strips, including concealed blocking and reinforcement specified in other Sections.

2. Show locations and sizes of cutouts and holes for plumbing fixtures, faucets, soap dispensers, and other items installed in architectural woodwork.

C. Product Data:
1. Submit data on fire retardant treatment materials and application instructions.
2. Product Certificates: For each type of product, signed by product Mnufacturer.
3. Woodwork Quality Standard Compliance Certificates: AWI Quality Certification Program certificates.
4. Qualification Data: For Installer.

D. Samples:
1. Submit two samples of finish plywood, 8 x 10 inch in size illustrating wood grain and specified finish.
2. Submit two samples of wood trim 10 inch long.

E. Certification: Submit copy of fabricator's authorization to use AWI Grade Stamps or AWI Quality Certification Program license and Project specific letters.

1.4 QUALITY ASSURANCE

A. Perform work in accordance with AWI (Architectural Woodwork Institute) Architectural Woodwork Quality Standards Illustrated, Custom Grade.

B. Maintain one copy of each document on site.

1.5 QUALIFICATIONS

A. Fabricator: Company specializing in fabricating Products specified in this section with minimum three years documented experience.

B. Installer Qualifications: Certified participant in AWI's Quality Certification Program.

C. Source Limitations: Engage a qualified woodworking firm to assume undivided responsibility for production of interior architectural woodwork.

D. Quality Standard: Unless otherwise indicated, comply with AWI's "Architectural Woodwork Quality Standards" for grades of interior architectural woodwork indicated for construction, finishes, installation, and other requirements.
1. Provide AWI Quality Certification Program labels and certificates indicating that woodwork complies with requirements of grades specified.

1.6 MOCKUP

A. Section 01400 - Quality Requirements: Mockup requirements.

B. Construct mockups, full size including window sill and door casing.

C. Locate where directed by Architect/Engineer.

D. Incorporate accepted mockup as part of Work if undisturbed at time of Substantial Completion.

1.7 PRE-INSTALLATION MEETINGS

A. Section 01300 - Administrative Requirements: Pre-installation meeting.

B. Convene minimum two weeks prior to commencing work of this section.

1.8 DELIVERY, STORAGE, AND HANDLING

A. Section 01600 - Product Requirements: Product storage and handling requirements.

B. Do not deliver woodwork until painting and similar operations that could damage woodwork have been completed in installation areas. If woodwork must be stored in other than installation areas, store only in areas where environmental conditions are controlled.

C. Environmental Limitations: Do not deliver or install woodwork until building is enclosed, wet work is complete, and HVAC system is operating and maintaining temperature and relative humidity at occupancy levels during the remainder of the construction period.

D. Protect work from moisture damage.

1.9 FIELD MEASUREMENTS

A. Verify field measurements prior to fabrication.

B. Field Measurements: Where woodwork is indicated to fit to other construction, verify dimensions of other construction by field measurements before fabrication, and indicate measurements on Shop Drawings. Coordinate fabrication schedule with construction progress to avoid delaying the Work.
   1. Locate concealed framing, blocking, and reinforcements that support woodwork by field measurements before being enclosed, and indicate measurements on Shop Drawings.
   2. Established Dimensions: Where field measurements cannot be made without delaying the Work, establish dimensions and proceed with fabricating woodwork without field measurements. Provide allowance for trimming at site, and coordinate construction to ensure that actual dimensions correspond to established dimensions

1.10 SEQUENCING

A. Sequence work to ensure utility connections are achieved in orderly and expeditious manner.

1.11 COORDINATION

A. Section 01300 - Administrative Requirements: Coordination and project conditions.

B. Coordinate sizes and locations of framing, blocking, furring, reinforcements, and other related units of Work specified in other Sections to ensure that interior architectural woodwork can be supported and installed as indicated.

PART 2 - PRODUCTS

2.1 FINISH CARPENTRY

A. General: Provide materials that comply with requirements of AWI's quality standard for each type of woodwork and quality grade specified, unless otherwise indicated

2.2 COMPONENTS

A. Hardwood Lumber: AWI Grade Custom Grade; maximum moisture content of 6-8 percent; and the following:
   1. Species of Wood: Red Oak
   2. Cut or Slicing of Wood: Plain or Flat Sawn

2.3 ACCESSORIES

A. Fasteners: Of size and type to suit application.

B. Concealed Joint Fasteners: Threaded steel.

C. Lumber for Shimming, Blocking, and Hanging strips: Softwood lumber: Stress Group, Southern Pine species, No. 2 grade, 15 percent maximum moisture content, pressure preservation treatment species.

D. Wood Filler: Solvent base, tinted to match surface finish color.

E. Wood Treatment:
   1. Fire Retardant (FR-S Type): Chemically treated and pressure impregnated; capable of providing maximum flame spread/smoke development rating of 25 / 450 in accordance with ASTM E84
   2. Shop pressure treat treatment to wood materials requiring fire rating preservatives to concealed wood blocking.
   3. Provide identification on fire retardant treated material.
   4. Deliver fire retardant treated materials cut to required sizes. Minimize field cutting.
   5. Redry or Kiln dry wood after pressure treatment to maximum 6-8 percent moisture content.

2.4 FABRICATION

A. Fabricate to AWI Custom standards.

B. Shop assemble work for delivery to site, permitting passage through building openings.

C. Shop prepare and identify components for grain matching during site erection.

D. Backout or groove backs of flat trim members and kerf backs of other wide, flat members, except for members with ends exposed in finished work.

E. Assemble casings in plant except where limitations of access to place of installation require field assembly

F. Assemble moldings in plant to maximum extent possible. Miter corners in plant and prepare for field assembly with bolted fittings designed to pull connections together.

G. When necessary to cut and fit on site, fabricate materials with ample allowance for cutting. Furnish trim for scribing and site cutting.

2.5 FINISHING

A. Sand work smooth and set exposed nails and screws.

B. Apply wood filler in exposed nail and screw indentations.

C. On items to receive transparent finishes, use wood filler matching surrounding surfaces and of types recommended for applied finishes.

D. Stain, seal, and varnish exposed to view surfaces, per specifications section 09900, Paintings and Coatings. All finished natural woods to match.

E. Seal internal surfaces and semi-concealed surfaces.

F. Seal surfaces in contact with cementitious materials.

PART 3 - EXECUTION

3.1 EXAMINATION

A. Section 01300 - Administrative Requirements: Coordination and project conditions.

B. Verify adequacy of backing and support framing.

C. Verify mechanical, electrical, and building items affecting work of this section are placed and ready to receive this work.

D. Before installation, condition woodwork to average prevailing humidity conditions in installation areas.

E. Before installing architectural woodwork, examine shop-fabricated work for completion and complete work as required, including removal of packing and backpriming.

3.2 INSTALLATION

A. Install work in accordance with AWI Custom quality standard.

B. Set and secure materials and components in place, plumb and level.

C. Carefully scribe work abutting other components, with maximum gaps of 1/32 inch. Do not use additional overlay trim to conceal larger gaps.

D. Site Applied Wood Treatment:
1. Apply preservative treatment.
2. Brush apply two coats of preservative treatment on wood in contact with cementitious materials.
3. Treat site-sawn cuts.
4. Allow preservative to dry prior to erecting members.

E. Preparation For Site Finishing:
1. Set exposed fasteners. Apply wood filler in exposed fastener indentations. Sand work smooth.
2. Site Finishing: Refer to Section 09900, Paints and Coatings
3. Before installation, prime paint surfaces of items or assemblies to be in contact with cementitious materials.

F. Anchor woodwork to anchors or blocking built in or directly attached to substrates. Secure with countersunk, concealed fasteners and blind nailing as required for complete installation. Use fine finishing nails or finishing screws for exposed fastening, countersunk and filled flush with woodwork and matching final finish if transparent finish is indicated.

G. Standing and Running Trim: Install with minimum number of joints possible, using full-length pieces (from maximum length of lumber available) to greatest extent possible. Do not use pieces less than 96 inches long, except where shorter single-length pieces are necessary. Scarf running joints and stagger in adjacent and related members.
1. Fill gaps, if any, between top of base and wall with plastic wood filler, sand smooth, and finish same as wood base if finished.
2. Install standing and running trim with no more variation from a straight line than 1/8 inch in 96 inches.

3.3 ERECTION TOLERANCES

A. Section 01400 - Quality Requirements: Tolerances.

B. Maximum Variation from Indicated Position: 1/16 inch.

C. Maximum Offset from Alignment with Abutting Materials: 1/32 inch.

D. Repair damaged and defective woodwork, where possible, to eliminate functional and visual defects; where not possible to repair, replace woodwork. Adjust joinery for uniform appearance.

3.4 SCHEDULES

A. Interior:
1. Window Sills: Clear Red Oak; prepare for transparent finish.
2. Casings and Miscellaneous Trim: Clear Red Oak; prepare for transparent finish.

END OF SECTION

SECTION 06410

CUSTOM CABINETS

PART 1 - GENERAL

1.1 SUMMARY

A. Section includes custom-fabricated cabinet units; counter tops; cabinet hardware; preparation for installing utilities in cabinets; and shop and / or site finishing.

B. Related Sections:
   1. Section 06114 - Wood Blocking and Curbing: Grounds and support framing
   2. Section 09900 - Paints and Coatings: Site finishing of cabinet exterior and interior.

1.2 REFERENCES

A. American National Standards Institute:
   1. ANSI A156.9 - Cabinet Hardware
   2. ANSI A208.1 - Mat-Formed Wood Particleboard.

B. Architectural Woodwork Institute:
   1. AWI - Quality Standards Illustrated.

C. Federal Specification Unit:
   1. FS A-A-1936 - Adhesive, Contact, Neoprene Rubber.

D. National Electrical Manufacturers Association:
   1. NEMA LD 3 - High Pressure Decorative Laminates.

E. Woodwork Institute of California:
   1. WIC - Manual of Millwork.

1.3 SUBMITTALS

A. Section 01330 - Submittal Procedures: Submittal procedures.

B. Product Data: For panel products, high-pressure decorative laminate, adhesive for bonding plastic laminate, cabinet hardware and accessories.

C. Shop Drawings: Indicate materials, component profiles and elevations, assembly methods, joint details, fastening methods, accessory listings, hardware location and schedule of finishes.
   1. Show details full size.
   2. Show locations and sizes of furring, blocking, and hanging strips, including concealed blocking and reinforcement specified in other Sections.

3. Show locations and sizes of cutouts and holes for plumbing fixtures, faucets, soap dispensers, and other items installed in architectural woodwork.

D. Product Data: Submit data for hardware accessories.

E. Samples for Initial Selection:
1. Plastic laminates.

F. Samples for Verification:
1. Lumber with or for transparent finish, not less than 50 sq. in., for each species and cut, finished on 1 side and 1 edge.
2. Submit two, 8 x 10 inch size samples, illustrating cabinet finish.
3. Submit two, 8 x 10 inch size samples, illustrating counter top finish.
4. Submit one sample of drawer pulls and hinges, illustrating hardware finish.

G. Certification: Submit copy of fabricator's authorization to use AWI Grade Stamps. AWI Quality Certification Program license and Project specific letters.

H. Product Certificates: For each type of product, signed by product Manufacturer.

I. Qualification Data: For Installer.

1.4 QUALITY ASSURANCE

A. Perform work in accordance with AWI (Architectural Woodwork Institute) Architectural Woodwork Quality Standards Illustrated, Custom Grade.

B. Source Limitations: Engage a qualified woodworking firm to assume undivided responsibility for production of interior architectural woodwork.

C. Installer Qualifications: Certified participant in AWI's Quality Certification Program.

D. Quality Standard: Unless otherwise indicated, comply with AWI's "Architectural Woodwork Quality Standards" for grades of interior architectural woodwork indicated for construction, finishes, installation, and other requirements.
1. Provide AWI Quality Certification Program labels and certificates indicating that woodwork complies with requirements of grades specified.

E. Maintain one copy of each document on site.

1.5 QUALIFICATIONS

A. Fabricator: Company specializing in performing Work of this section with minimum three years documented experience.

B. Fabricator: Authorized to use AWI Grade Stamps

1.6 MOCKUP

A. Section 01400 - Quality Requirements: Mockup requirements.

B. Construct mockup of full size base cabinet including plumbing fixtures, hardware, accessories, and fitments.

C. Locate where directed by Architect/Engineer.

D. Incorporate accepted mockup as part of Work.

1.7 PRE-INSTALLATION MEETINGS

A. Section 01300 - Administrative Requirements: Pre-installation meeting.

B. Convene minimum two weeks prior to commencing work of this section.

1.8 DELIVERY, STORAGE, AND HANDLING

A. Section 01600 - Product Requirements: Product storage and handling requirements.

B. Protect units from moisture damage.

1.9 ENVIRONMENTAL REQUIREMENTS

A. Section 01600 - Product Requirements.

B. During and after installation of Work of this section, maintain same temperature and humidity conditions in building spaces as will occur after occupancy.

1.10 FIELD MEASUREMENTS

A. Verify field measurements prior to fabrication.

PART 2 - PRODUCTS

2.1 CUSTOM CABINETS

A. Fabricators:
   1. Fieldstone Cabinetry, Inc. Model Hudson, Brighton or Farmington.
   2. Legacy Cabinets, Inc. Model The Select Series, Plantation Natural Square
   3. Substitutions: Section 01600 - Product Requirements.

2.2 COMPONENTS

A. Hardwood Lumber: AWI Grade Custom; maximum moisture content of 6-8 percent; and the following:
   1. Species of Wood: Red Oak

2. Cut or Slicing of Wood: Plain, Flat Sawn or Quarter Sawn
3. Matching of Individual Leaves to Each Other: slip matching.

B. Hardwood Plywood: AWI Grade A veneer with medium density fiberboard core; low VOC type of glue recommended for application; formaldehyde-free binders and the following:
1. Species of Veneer: Red Oak
2. Cut or Slicing of Veneer: Plain, Flat Sawn or Quarter Sawn
3. Matching of Individual Leaves to Each Other: slip random matching
4. Matching Across the Panel Face: balanced matching
5. Matching or Relationship of Panels to Each Other: premanufactured sets.

C. Particleboard: ANSI A208.1 Type 1; ¾" thick composed of Woodstalk Agrifiber Core medium density, made with water resistant adhesive; sanded faces. End panels, Bottoms, Rails, Shelves, Doors and Bases; formaldehyde-free binders

D. Drawer Sides and Backs: Solid-hardwood lumber.

E. Drawer Bottoms: Hardwood plywood.

F. Hardboard with Melamine backer. 7/32" Backs.

G. High Pressure Decorative Laminate: NEMA LD 3, GP50 for horizontal surfaces, GP28 for vertical surfaces, CL20 for cabinet liner surfaces, BK20 for undecorated backing sheets, FR50 for fire-retardant surfaces; through color, pattern, and surface texture as selected by Architect from full range Manufacturers standards.
1. Manufacturer: Subject to compliance with requirements, provide high-pressure decorative laminates by one of the following or approved equivalent:
   a. Nevamar Company, LLC; Decorative Products Div.
   b. Panolam Industries International Incorporated.
   c. Wilsonart International; Div. of Premark International, Inc.

2.3 ACCESSORIES

A. Adhesive for High Pressure Decorative Laminates: Type recommended by laminate Manufacturer to suit application, formaldehyde free adhesive, low voc.

B. Veneer Edge Band: Standard wood veneer edge band matching face veneer. Conceal edge grain of exposed and semi-exposed plywood and particle board with hardwood edge bands.

C. Fasteners: Size and type to suit application.

D. Bolts, Nuts, Washers, Lags, Pins, and Screws: Of size and type to suit application; brass finish in concealed locations and brass finish in exposed locations.

E. Concealed Joint Fasteners: Threaded steel.

F. Shelf Standards and Rests: Formed steel channels and rests, cut for fitted rests spaced at ½ inch centers; satin finish.

G. Drawer and Door Pulls: Extruded aluminum pull, "U" shaped pull, aluminum with satin finish, 4 inch centers. Stanley Hardware #348311, Satin Aluminum.

H. Catches: Adjustable Magnetic. Stanley Hardware #810160 Clear coated aluminum.

I. Drawer Slides: Galvanized steel construction, ball bearings separating tracks, full extension type. Blum Standard drawer runner 430E full extension.

J. Hinges: Concealed hinges type, steel with satin finish. 3-dimensional door adjustment. Blum Modul hinge, screw on.

2.4 FABRICATION

A. Shop assemble casework for delivery to site in units easily handled and to permit passage through building openings.

B. Fit shelves, doors, and exposed edges with matching veneer edging. Use one piece for full length only.

C. Cap exposed high pressure decorative laminate finish edges with material of same finish and pattern.

D. Door and Drawer Fronts: 3/4 inch thick; partial overlay style.

E. When necessary to cut and fit on site, fabricate materials with ample allowance for cutting. Furnish trim for scribing and site cutting.

F. Apply high pressure decorative laminate finish in full uninterrupted sheets consistent with manufactured sizes. Fit corners and joints hairline; secure with concealed fasteners. Locate counter butt joints minimum 2 feet from sink cut-outs.

G. Apply laminate backing sheet to reverse side of plastic laminate finished surfaces.

H. Fabricate cabinets and counter tops with cutouts for plumbing fixtures, inserts, outlet boxes, fixtures and fittings. Verify locations of cutouts from on-site dimensions. Seal cut edges.

2.5 SHOP FINISHING

A. Sand work smooth and set exposed nails and screws.

B. Apply wood filler in exposed nail and screw indentations.

C. On items to receive transparent finishes, use wood filler matching surrounding surfaces and of types recommended for applied finishes.

D. Finish work in accordance with AWI - Section 1500 Finish System Transparent TR-6 or TR-7.

E. Stain, seal and varnish exposed to view surfaces.

F. Seal, stain, and varnish internal surfaces of cabinets and semi-concealed surfaces.

G. Seal surfaces in contact with cementitious materials.

H. Finish in accordance with Section 09900.

PART 3 - EXECUTION

3.1 EXAMINATION

A. Section 01300 - Administrative Requirements: Coordination and project conditions.

B. Verify adequacy of backing and support framing.

C. Verify location and sizes of utility rough-in associated with work of this section.

3.2 INSTALLATION

A. Set and secure casework in place; rigid, plumb, and level.

B. Use fixture attachments in concealed locations for wall mounted components.

C. Use concealed joint fasteners to align and secure adjoining cabinet units and counter tops.

D. Carefully scribe casework abutting other components, with maximum gaps of 1/32 inch. Do not use additional overlay trim for this purpose.

E. Secure cabinet and counter bases to floor using appropriate angles and anchorages.

F. Countersink anchorage devices at exposed locations. Conceal with solid wood plugs of species to match surrounding wood; finish flush with surrounding surfaces.

3.3 ADJUSTING

A. Section 01700 - Execution Requirements: Testing, adjusting and balancing.

B. Adjust moving or operating parts to function smoothly and correctly.

3.4 CLEANING

A. Section 01700 - Execution Requirements: Final cleaning.

B. Clean casework, counters, shelves, hardware, fittings, and fixtures.

3.5 SCHEDULES

A. Meeting Room: Base and upper units wood or high pressure decorative laminate, high pressure decorative laminate counter top, exposed wood finish AWI TR-6 or TR-7.

B. Corridor: Base and upper units wood or high pressure decorative laminate, high pressure decorative laminate counter top, exposed wood finish AWI TR-6 or TR-7.

C. Toilet Rooms: High pressure decorative laminate counter top

END OF SECTION

SECTION 07190

WATER REPELLENTS

PART 1 - GENERAL

1.1 SUMMARY

A. Section includes water repellent coating applied to exterior and interior clay brick, concrete masonry, and concrete surfaces.

B. Related Sections:
1. Section 03300-Cast-In-Place Concrete: Concrete surfaces
2. Section 07900 - Joint Sealers.

1.2 REFERENCES

A. ASTM International:
1. ASTM D1653 - Standard Test Method for Water Vapor Transmission of Organic Coating Films
2. ASTM G154 - Standard Practice for Operating Fluorescent Light Apparatus for UV Exposure of Nonmetallic Materials.

1.3 SYSTEM DESCRIPTION

A. Applied Penetrant: Material to restrict moisture absorption in material being treated as recommended by Manufacturer for specific substrate.

B. Performance Requirements:
1. Reduce absorption of water and waterborne contaminants into substrate.
2. Permit water vapor transmittance.
3. No change to slight darkening of substrate after application.

1.4 SUBMITTALS

A. Section 01330 - Submittal Procedures: Submittal procedures.

B. Product Data: Submit details of product description, tests performed, limitations to coating, and chemical properties including percentage of solids.

C. Manufacturer's Installation Instructions: Submit special procedures and conditions requiring special attention, and cautionary procedures required during application.

D. Manufacturer's Certificate: Certify products meet or exceed specified requirements.

1.5 QUALIFICATIONS

A. Manufacturer: Company specializing in manufacturing products specified in this section with minimum three years documented experience.

B. Applicator: Company specializing in performing Work of this section with minimum three years documented experience.

1.6 PRE-INSTALLATION MEETINGS

A. Section 01300 - Administrative Requirements: Pre-installation meeting.

B. Convene minimum two weeks prior to commencing work of this section.

1.7 DELIVERY, STORAGE, AND HANDLING

A. Section 01600 - Product Requirements: Product storage and handling requirements.

B. Protect coating liquid from freezing.

1.8 ENVIRONMENTAL REQUIREMENTS

A. Section 01600 - Product Requirements.

B. Do not apply coating when wind velocity exceeds manufacturer recommendations.

C. Environmental Requirements:
   1. Ambient and surface temperatures between 50 and 100 degrees F (4 and 38 degrees C).
   2. Do not apply if rain or temperatures below 50 degrees F (4 degrees C) are expected within 6 hours after application.
   3. Do not apply during winds that could carry water repellent to adjacent surfaces, properties, or vegetation.
   4. Do not apply sooner than 24 hours after surface has been exposed to rain or other water source.

D. Substrate:
   1. Cured minimum 30 days
   2. Not frozen or frost covered
   3. Clean, sound, and dry.

E. Ensure adequate ventilation in application areas.

F. Joint sealers, paints, and glazing compounds and sealants fully cured.

1.9 WARRANTY

A. Section 01700 - Execution Requirements: Product warranties and product bonds.

B. Furnish five year Manufacturer warranty for water repellents.

PART 2 - PRODUCTS

2.1 WATER REPELLENTS

A. Manufacturers:
1. Euclid Chemical Company
2. Pecora Corporation
3. ProSoCo
4. Sonneborn Building Products
5. Substitutions: Section 01600 - Product Requirements.

2.2 COMPONENTS

A. Siloxane Water Repellent: Siloxane penetrating type water repellent, with maximum 175 g/L VOC content.
1. Moisture Vapor Transmission: Maximum 28.33 perms or 50% compared to untreated surfaces, ASTM D1653.
2. Resistance to Accelerated Weathering: No loss in repellency after 2,500 hours, ASTM G154.
3. Reduction of Leakage: Minimum 97 percent water penetration and leakage, ASTM E514.
4. Apply to clay brick, concrete masonry, concrete, and stucco.

B. Silane Water Repellent: Silane penetrating type water repellent, with maximum 175 g/L VOC content.
1. Moisture Vapor Transmission: Maximum 28.33 perms or 50% compared to untreated surfaces, ASTM D1653.
2. Resistance to Accelerated Weathering: No loss in repellency after 2,500 hours, ASTM G154.
3. Reduction of Leakage: Minimum 97 percent water penetration and leakage, ASTM E514.
4. Apply to clay brick, concrete masonry, concrete, and stucco.

PART 3 - EXECUTION

3.1 EXAMINATION

A. Section 01300 - Administrative Requirements: Coordination and project conditions.

B. Verify surfaces to be coated are dry, clean, and free of efflorescence, oil, or other matter detrimental to application of coating.

3.2 PREPARATION

A. Delay Work until concrete substrate is cured minimum of 60 days.

B. Remove loose particles and foreign matter.

C. Remove oil or foreign substance with chemical solvent which will not effect coating.

D. Scrub and rinse surfaces with water and let dry.

3.3 APPLICATION

A. Apply at rate of per Manufacturers coverage rates and by recommend application equipment.

B. Apply in two continuous, uniform coats.

3.4 PROTECTION OF INSTALLED CONSTRUCTION

A. Section 01700 - Execution Requirements: Protecting installed construction.

B. Protect adjacent surfaces not scheduled to receive coating.

C. Protect landscaping, property and vehicles.

D. When applied to unscheduled surfaces, remove immediately by methods as instructed by coating Manufacturer.

3.5 SCHEDULES

A. Concrete floors: Two coat application, clear.

END OF SECTION

SECTION 07212

ROOF BOARD INSULATION

PART 1 - GENERAL

1.1 SUMMARY

A. Section includes rigid board insulation and integral vapor retarder at roof.

B. Related Sections:
1. Section 07260 - Vapor Retarders: Vapor retarder materials to adjacent insulation
2. Section 07213 - Batt Insulation
3. Section 13120 – Pre-Engineered Buildings

1.2 REFERENCES

A. ASTM International:
1. ASTM C578 - Standard Specification for Rigid, Cellular Polystyrene Thermal Insulation
2. ASTM C1289 - Standard Specification for Faced Rigid Cellular Thermal Insulation Board
3. ASTM D2842 - Standard Test Method for Water Absorption of Rigid Cellular Plastics
4. ASTM E84 - Standard Test Method for Surface Burning Characteristics of Building Materials
5. ASTM E96 - Standard Test Methods for Water Vapor Transmission of Materials.

B. National Fire Protection Association:
1. NFPA 255 - Standard Method of Test of Surface Burning Characteristics of Building Materials.

C. Underwriters Laboratories Inc.:
1. UL 723 - Tests for Surface Burning Characteristics of Building Materials.

1.3 SYSTEM DESCRIPTION

A. Materials of This Section: Provide thermal protection to vapor retarder in conjunction with vapor retarder materials in Section 07260.

1.4 SUBMITTALS

A. Section 01330 - Submittal Procedures: Submittal procedures.

B. Product Data: Submit data on product characteristics, performance criteria, limitations, and adhesives.

C. Manufacturer's Installation Instructions: Submit special environmental conditions required for installation and installation techniques.

D. Manufacturer's Certificate: Certify products meet or exceed specified requirements.

1.5 ENVIRONMENTAL REQUIREMENTS

A. Section 01600 - Product Requirements.

B. Do not install adhesives when temperature or weather conditions are detrimental to successful installation.

1.6 SEQUENCING

A. Section 01100 - Summary: Work sequence.

B. Sequence Work to ensure firestopping and vapor retarder materials are in place before beginning Work of this section.

1.7 COORDINATION

A. Section 01300 - Administrative Requirements: Coordination and project conditions.

B. Coordinate Work with Section 05500 and Section 13120 for installation of vapor barrier.

PART 2 - PRODUCTS

2.1 BOARD INSULATION

A. Manufacturers:
1. Celotex - Polyisocyanurate Insulation Model THERMAX Metal Building Board
2. Rmax - Polyisocyanurate Insulation Model THERMAROOF Plus - 3
3. Substitutions: Section 01600 - Product Requirements.

2.2 COMPONENTS

A. Polyisocyanurate Insulation: ASTM C1289 Rigid Board, glass fiber reinforced, Type I, Class 1 or 2. Conforming to the following:
1. Board Density: 2.0 lb/cu ft
2. Board Size: 4’ x 8’ inch
3. Board Thickness: 2.0 inches base course, 1.5 inches top. Total 3.5 inches of insulation
4. Facing: Factory applied skin of aluminum foil on both faces
5. Total Thermal Resistance: Aged R of 24
6. Water Absorption: In accordance with ASTM C209 < 1% percent by volume maximum
7. Water Vapor Transmission: In accordance with ASTM E 96 < 1 perm
8. Compressive Strength: Minimum 20 psi

9. Board Edges: Square edges
10. Flame/Smoke Properties: 25 / <250 in accordance with ASTM E84 labeled by agency acceptable to authorities having jurisdictions.

2.3 ACCESSORIES

A. Adhesive: Type recommended by insulation Manufacturer for application.

B. Adhesive: Type recommended by insulation fastener Manufacturer for application.

C. Adhesive: Gun grade, mastic type, compatible with insulation and substrate; Type recommended by insulation Manufacturer for application.

D. Sheet Vapor Retarder: Provide vapor barriers with the following properties based on testing manufacture's standard products, according to test methods indicated, applied to substrates simulating Project conditions using same materials and application methods to be used for Project
1. ALUMISEAL CORPORATION:
   a. Sheet vapor barrier: Zero Perm Vapor Barrier
   b. Vapor barrier tape: Zero Perm Pressure Sensitive Tape
2. Water-vapor transmission (flat condition): 0.000 grams/hr/sq meter, per ASTM E-96 Procedure B
3. Water-vapor transmission (flex test): 0.0134 grams/100 sq in, per petri dish method, Standard test #2
4. Tensile strength: 25,000 lbs/sq in per ASTM D882-64T
5. Bursting strength: 96.6 lbs/sq in, per ASTM D 77463T
6. Tear strength: 1,800 lbs/sq in, per ASTM D 1004-66
7. Melting point: 480 degrees F, per Fisher-Johns test
8. Fire hazard classification:
   a. Flame spread: 5 per ASTM E-84 and NFDA 255
   b. Fuel contributed: 0 per ASTM E-84 and NFDA 255
   c. Smoke developed: 5 per ASTM E-84 and NFDA 255

E. Tape: Bright aluminum self-adhering type, mesh reinforced, 2 inch wide.

F. Insulation Fasteners: Impaling clip of plastic with washer retainer and clips, to be adhered to surface to receive board insulation, length to suit insulation thickness and substrate, capable of securely and rigidly fastening insulation in place until installation of metal roof panel.

PART 3 - EXECUTION

3.1 EXAMINATION

A. Section 01300 - Administrative Requirements: Coordination and project conditions.

B. Verify substrate, adjacent materials, and insulation boards are dry and ready to receive insulation .

C. Verify substrate surface is flat, free of materials or substances affecting adhesive bond.

3.2 INSTALLATION - ROOF

A. Install boards on roof.
1. Attach to the roof deck with Manufacturer approved fasteners.
2. Place boards in method to maximize contact bedding.
3. Stagger side and end joints, stagger joints from top and bottom layers.
4. Butt edges and ends tight to adjacent board and to protrusions.
5. Tape seal in place to ensure continuity of vapor retarder.
6. Install material in accordance with Manufacturer's instructions and per reviewed submittals.
7. Coordinate with work of other Sections.
8. Boards must be kept completely dry before and throughout construction.

B. Cut and fit insulation tight to protrusions or interruptions to insulation plane.

C. Install Sheet Vapor Barrier.
1. Tape seal in place to ensure continuity of vapor retarder.
2. Install material in accordance with Manufacturer's instructions and per reviewed submittals.
3. Coordinate with work of other Sections.

3.3 PROTECTION OF INSTALLED CONSTRUCTION

A. Section 01700 - Execution Requirements: Protecting installed construction.

B. Do not permit damage to insulation prior to covering.

END OF SECTION

SECTION 07213

BATT INSULATION

PART 1 - GENERAL

1.1 SUMMARY

A. Section includes batt insulation in exterior wall construction; Sound attenuation insulation; and batt insulation for filling perimeter window and door shim spaces, and crevices in exterior wall and roof.

B. Related Sections:
1. Section 07260 - Vapor Retarders: Vapor retarder materials adjacent to insulation
2. Section 07212 - Board Insulation
3. Section 07840 - Firestopping
4. Section 09260 - Gypsum Board Assemblies: Acoustic insulation.

1.2 REFERENCES

A. ASTM International:
1. ASTM C665 - Standard Specification for Mineral-Fiber Blanket Thermal Insulation for Light Frame Construction and Manufactured Housing
2. ASTM E84 - Standard Test Method for Surface Burning Characteristics of Building Materials.

B. National Fire Protection Association:
1. NFPA 255 - Standard Method of Test of Surface Burning Characteristics of Building Materials.

C. Underwriters Laboratories Inc.:
1. UL 723 - Tests for Surface Burning Characteristics of Building Materials.

1.3 SYSTEM DESCRIPTION

A. Materials of This Section: Provide thermal protection to vapor retarder in conjunction with vapor retarder materials in Section 07260.

1.4 SUBMITTALS

A. Section 01330 - Submittal Procedures: Submittal procedures.

B. Product Data: Submit data on product characteristics, performance criteria, and limitations.

C. Manufacturer's Certificate: Certify products meet or exceed specified requirements.

1.5 QUALITY ASSURANCE

A. Source Limitations: Obtain each type of building insulation through one source from a single Manufacturer.

B. Fire-Test-Response Characteristics: Provide insulation and related materials with the fire-test-response characteristics indicated, as determined by testing identical products per test method indicated below by UL or another testing and inspecting agency acceptable to authorities having jurisdiction. Identify materials with appropriate markings of applicable testing and inspecting agency.
   1. Surface-Burning Characteristics: ASTM E 84
   2. Fire-Resistance Ratings: ASTM E 119
   3. Combustion Characteristics: ASTM E 136.

1.6 QUALIFICATIONS

A. Manufacturer: Company specializing in manufacturing products specified in this section with minimum three years documented experience.

B. Applicator: Company specializing in performing work of this section with minimum three years documented experience.

C. Comply with governing codes and regulations

1.7 COORDINATION

A. Section 01300 - Administrative Requirements: Coordination and project conditions.

B. Coordinate the Work with Section 07260 for installation of vapor retarder.

1.8 DELIVERY, STORAGE, AND HANDLING

A. Section 01600 - Product Requirements: Product storage and handling requirements.

B. Protect insulation materials from physical damage and from deterioration by moisture, soiling, and other sources. Store inside and in a dry location. Comply with Manufacturer's written instructions for handling, storing, and protecting during installation.

PART 2 - PRODUCTS

2.1 BATT INSULATION

A. Manufacturers:
   1. CertainTeed Insulation
   2. Johns Manville Model ComfortTherm
   3. Knauf Fiber Glass
   4. Owens Corning Fiberglas
   5. Substitutions: Section 01600 - Product Requirements.

2.2 COMPONENTS

A. Thermal Batt Insulation: ASTM C665, Type II, Class A, Category 1; Poly-encasulated Formaldehyde-free Thermal fiber glass fiber insulation; friction fit, conforming to the following:
1. Thermal Resistance: R-19 at 6” studs
2. Thermal Resistance: R-15 at 3 5/8” studs
3. Batt Size: 16 inch
4. Facing: Faced on one side with Permeablilty, Facer film -0.5 Perms
5. Flame/Smoke Properties: Spread 25 or less in accordance with ASTM E84.

B. Acoustical Batt Insulation: ASTM C665, Type II, Class A, Category 1; Poly-encasulated Formaldehyde-free Acoustical fiber glass fiber insulation; friction fit, conforming to the following:
1. 6 ½” batt at 6” studs
2. 3 ½” batt at 3 5/8” studs
3. Batt Size: 16 inch
4. At toilet rooms: Facing: Faced on one side with Permeablilty, Facer film -0.5 Perms
5. Flame/Smoke Properties: Spread 25 or less in accordance with ASTM E84.

C. Steel wire; galvanized; type and size to suit application.

D. Tape: Polyethylene self-adhering type, mesh reinforced, 2 inch wide.

PART 3 - EXECUTION

3.1 EXAMINATION

A. Section 01300 - Administrative Requirements: Coordination and project conditions.

B. Verify substrate, adjacent materials, and insulation are dry and ready to receive insulation.
1. Proceed with installation only after unsatisfactory conditions have been corrected.

3.2 INSTALLATION

A. Comply with insulation Manufacturer's written instructions applicable to products and application indicated.

B. Install in exterior spaces without gaps or voids. Do not compress insulation.

C. Trim insulation neatly to fit spaces. Insulate miscellaneous gaps and voids.

D. Fit insulation tight in spaces and tight to exterior side of mechanical and electrical services within plane of insulation.

E. Install with factory applied vapor retarder membrane facing warm side of building spaces. Lap ends and side flanges of membrane between framing members.

F. Metal Framing: Place vapor retarder on warm side of insulation; lap and seal sheet retarder joints over member face. Install per Manufacturer's written instructions.

G. At chase areas; Retain in place with spindle fasteners at 16 inches oc. Retain insulation in place with wire secured to framing members.

H. Tape seal butt ends, lapped flanges, and tears or cuts in membrane.

I. Extend vapor retarder tight to full perimeter of adjacent window and door frames and other items interrupting plane of membrane. Tape seal in place.

J. Coordinate Work this section with vapor retarder specified in Section 07260.

3.3 INSTALLATION OF INSULATION IN CEILINGS FOR SOUND ATTENUATION

A. Install 3-inch- thick, unfaced glass-fiber blanket insulation over suspended ceilings at partitions in a width that extends insulation 48 inches on either side of partition.

B. If indicated on documents, install 3-inch-thick, unfaced glass-fiber blanket insulation over suspended ceilings so that insulation extends over entire ceiling.

3.4 FIELD QUALITY CONTROL

A. Inspections/observations will be performed by Owner to ascertain compliance with specified requirements in accordance with the General Conditions. Do not cover up installation of insulation without Owner review.

3.5 PROTECTION

A. Protect installed insulation from damage due to harmful weather exposures, physical abuse, and other causes. Provide temporary coverings or enclosures where insulation is subject to abuse and cannot be concealed and protected by permanent construction immediately after installation.

END OF SECTION

SECTION 07260

VAPOR RETARDANT BARRIER

PART 1 - GENERAL

1.1 SUMMARY

A. Section includes sheet materials for controlling vapor diffusion.

B. Related Sections:
1. Section 03300 – Cast in Place Concrete.

1.2 REFERENCES

A. ASTM International:
1. ASTM C920 - Standard Specification for Elastomeric Joint Sealants.
2. ASTM E96 - Standard Test Methods for Water Vapor Transmission of Materials.

B. Sealant, Waterproofing and Restoration Institute:
1. SWRI - Sealant Specification.

1.3 PERFORMANCE REQUIREMENTS

A. Maximum Vapor Permeability (Perm): <.01 ng/S/m/Pa measured in accordance with ASTM E96 Method E.

1.4 SUBMITTALS

A. Section 01330 - Submittal Procedures: Submittal procedures.

B. Product Data: Submit data indicating material characteristics, performance criteria, and limitations.

C. Manufacturer’s Installation Instructions: Submit preparation and installation requirements, techniques.

1.5 QUALITY ASSURANCE

A. Perform Work in accordance with SWRI - Sealant and Caulking Guide Specification requirements for materials and installation.

1.6 MOCKUP

A. Section 01400 - Quality Requirements: Requirements for mockup.

B. Construct mock-up of including vapor retarder installation at roof.

C. Locate where directed by Architect/Engineer.

D. Incorporate accepted mockup as part of Work.

1.7 SEQUENCING

A. Do not install vapor retarder until items penetrating vapor retarder are in place.

B. Coordination installation with scheduled concrete pours to avoid delays. Make provisions for installation of work by other trades.

PART 2 - PRODUCTS

2.1 VAPOR RETARDERS

A. Manufacturers:
1. Alumiseal Corp. Model Zero Perm Vapor Barrier
2. Fiberweb Corp. Model Fiberweb 210
3. Fortifiber Corp. Model Moistop
4. Substitutions: Section 01600 - Product Requirements.

2.2 COMPONENTS

A. Sheet Retarder Type 1, Grade “A”, Style 4: Fiberglass reinforced polyethylene film for below grade application, 12 mil thick, perm rating of <0.01.

B. Sheet Retarder Type 2 formed by laminating a 1-mil thickness of aluminum, between two 1/2-mil thicknesses of mylar polyester, thick, perm rating of <0.01.

C. Adhesive Type 2: Compatible with sheet retarder and substrate, permanently non-curing.

2.3 ACCESSORIES

A. Tape: (Type1) Polyester self-adhering type, mesh reinforced, 2 inch wide, compatible with sheet material.

B. Tape: (Type 2) Pressure sensitive tape compatible with Sheet Retarder.

PART 3 - EXECUTION

3.1 PREPARATION

A. Remove loose or foreign matter capable of impairing adhesion.

B. Clean and prime substrate surfaces to receive adhesive.

C. Do not proceed until sand fill is level and without voids, and plumbing and electrical rough-ins are complete

3.2 INSTALLATION

A. Vapor Barrier For Below Slab: Secure sheet retarder Type 1, Apply continuously directly over sand fill. Lap edges and ends minimum 6 inches and tape joints to ensure complete and continuous seal.

B. Protect complete membrane from damage. Prior to pouring concrete, inspect membrane for punctures of damage and repair all punctures.

C. Vapor Retarder For Roof: Type 2 install vapor retarder continuously. Seal edges and ends with tape. Position laps over firm bearing. Adhesive Bond to common structure materials, also to seal lap joints.

END OF SECTION

SECTION 07413

SHEET METAL ROOF / WALL PANELS

PART 1 - GENERAL

1.1 SUMMARY

A. Section Includes:
1. Structural standing seam metal roofing
2. Metal vented soffit panels
3. Flush metal siding panels
4. Metal Roof Curbs
5. Metal Roof Walkways

B. Related Sections:
1. Section 07213 - Insulation Board
2. Section 07900 - Joint Sealers
3. Section 09900 - Painting

1.2 REFERENCES

A. American Iron and Steel Institute:
1. AISI SG-973 - Cold-Formed Steel Design Manual.

B. American Society of Civil Engineers:
1. ASCE 7 - Minimum Design Loads for Buildings and Other Structures.

C. American Society for Testing and Materials:
1. ASTM A792/A792M - Standard Specification for Steel Sheet, 55% Aluminum-Zinc Alloy Coated by the Hot-Dip Process, General Requirements

D. National Roofing Contractors Association:
1. NRCA - The NRCA Roofing and Waterproofing Manual.

E. Sheet Metal Contractors:
1. SMACNA - Architectural Sheet Metal Manual.

F. Underwriters Laboratories Inc.:
1. UL 580 - Tests for Uplift Resistance of Roof Assemblies.

1.3 DESIGN REQUIREMENTS

A. Roof Loads: Design roofing to resist live and dead loads with 1/240 maximum deflection.
1. Live Loads: 20PSF or as required by building code, whichever is greater
2. Dead Loads: Actual weight of materials incorporated into Work.

B. Wind Loads: Design and size components to withstand positive and negative wind loads, including increased loads at building corners, edges, and field of roof.
   1. Design Wind Load: As calculated in accordance with International Building Code (IBC) and ASCE 7 basic wind speed, exposure C.

C. Wind Uplift Resistance: UL 580; Class 90.

D. Air Infiltration: Limit air leakage through roof assembly to 0.03 cfm/sq ft of wall area, measured at reference differential pressure across assembly of 6.24 psf as measured in accordance with ASTM E283.

E. Water Leakage: None, when measured in accordance with ASTM E1646-95 with test pressure of 12.00 psf pressure differential with no uncontrollable water leakage when five gallons per hour of water is sprayed per square foot of roof area.

F. Exterior Components: Accommodate the following without damage to system, components or deterioration of seals.
   1. Movement within system
   2. Movement between system and perimeter framing components
   3. Dynamic loading and release of loads
   4. Deflection of structural support framing
   5. Expansion and contraction from temperature range of 210 degrees F over 12-hour period.

G. ALBEDO REQUIREMENTS: Actual independent laboratory certified test results must be submitted. Manufacturer must be an EnergyStar listed partner (www.energystar.gov).
   1. Emissivity (roof ability to emit absorbed solar energy) - greater than or equal to 0.85 for roofs with a 2:12 slope or steeper when tested at 14,000 hours irradiance per ASTM C1371.
   2. Initial Solar Reflectance (roof ability to reflect solar energy) - greater than or equal to 0.25 for roofs with a 2:12 slope or steeper when tested at 14,000 hours irradiance per ASTM C1549.
   3. Recycled Content - manufactured products must contain a minimum of 25% post-consumer recycled content.

1.4 SUBMITTALS

A. Section 01330 - Submittal Procedures

B. Shop Drawings:
   1. Indicate metal roofing and soffit panel profiles, jointing patterns, jointing details, fastening methods, flashings, terminations, and installation details.

C. Product Data:
   1. Submit data on metal types, finishes, and characteristics.
   2. Submit color charts for finish selection to Architect and TxDOT Project Manager.

D. Design Data:

1. Submit structural design calculations for metal roofing in conjunction with structural supports within construction documents signed and sealed by professional engineer licensed in the State of Texas.

E. Manufacturer's Installation Instructions: Submit instructions including special procedures for roofing penetrations, flashings, and perimeter conditions requiring special attention.

F. Manufacturer's Certificate: Certify Products meet or exceed specified requirements.

G. Submittals for Closeout

1. Project Record Documents: Record actual locations of concealed components and utilities. Record any changes to Construction Documents during construction and provide original As-Built set to TxDOT Project Manager at end of project. Contractor is required to maintain As-Built set on site and when changes occur. Progress Payments will be based on maintaining current As-Built set on a monthly basis and will be checked by TxDOT Project Manager.

2. Upon completion of erection, submit written Certification prepared and signed by the design Professional Engineer, qualified herein, attesting to his/her field verification of the erection being in accordance with his/her shop drawings.

1.5 QUALITY ASSURANCE

A. Perform Work in accordance with AISC - Quality Certification Program Category MB. MBMA - Metal Building Systems Manual and MBMA - Low Rise Building Systems Manual. Maintain one copy on site.

B. Manufacturer Qualifications: Company specializing in manufacturing the Products specified in this section with minimum five years documented experience with certification statement.

C. Erector Qualifications: Company specializing in performing the work of this Section with minimum of five years documented experience and certified trained by Manufacturer. Project Foreman must have specific training in proper installation of specified wall and roof systems with certification, and must submit qualifications of Foreman stated experience with this roofing system. Submit five references from five different architects or owners for systems that have been installed for at least two years and stating that the performance has been satisfactory.

D. Design structural components, develop shop drawings, and perform shop and site work under direct supervision of a Professional Structural Engineer experienced in design of this work and licensed in the State of Texas.

1.6 QUALIFICATIONS

A. Manufacturer: Company specializing in manufacturing Products specified in this section shall have a minimum of five years documented experience.

B. Installer: Company specializing in performing work of this section shall have a minimum of three years documented experience. This company shall provide owner with a Roofing Manufacturing and Installer's Certification that the roof has been designed based on the design criteria as specified and installed according the Manufacturer's standards. Contractor to provide copy of Manufacturer's approved Installer training certificate.

C. A certified Installer shall be on the job site, at all times during installation of the roof.

D. The roof shall be inspected by a certified Manufacturer's representative at least three separate occasions: at the beginning, midpoint and at completion of installation and all deficiencies shall be corrected, prior to substantial completion. Manufacturer's field reports must be sent directly to TxDOT within five days of each inspection.

E. The design of the metal roofing and structural supports shall be designed by a Professional Engineer experienced in design of this Work and licensed in State of Texas.

1.7 DELIVERY, STORAGE, AND HANDLING

A. Stack material to prevent twisting, bending, and abrasion, and to provide ventilation. Slope metal sheets to ensure drainage.

B. Prevent contact with materials causing discoloration or staining.

1.8 FIELD MEASUREMENTS

A. Verify field measurements prior to fabrication.

1.9 COORDINATION

A. Section 01300 - Administrative Requirements

B. Coordinate with Work of Section 07213 for insulation installed within roof assembly.

1.10 WARRANTY

A. Section 01700 - Execution Requirements: Requirements for warranties.

B. Furnish 20 year Galvalume substrate Manufacturer warranty for sheet metal roofing against structural failure, corrosion, and perforation.

C. Furnish 2 year Contractor warranty against leakage due to construction methods used for installation of roof, flashing, and all penetrations.

D. Weather Tightness Warranty: Provide a 20 (twenty) year warranty for occupied buildings against leakage due to construction methods used for installation of roof, flashing, and all penetrations. Provide a Single Source warranty from the Manufacturer with a No Dollar Limit (NDL) during the warranty period starting from the time of Substantial Completion throughout length of warranty. The roofing Manufacturer warrants to the Building Owner (TxDOT) that the roofing system will not allow intrusion

of water from the exterior into the building during the warranty period. Manufacturer representative will make at least two inspections during the roof installation and one final inspection to confirm correct roofing installation per Manufacturer's requirements. A certified Installer must be on site at all times during the roof installation. Provide Manufacturers representative field reports directly to TxDOT Project Manager.

F. Submit sample of Manufacturer's warranty for review when other shop drawings are submitted. Final warranty will be signed by Manufacturer and Installer, but will not require signature of the owner.

PART 2 - PRODUCTS

2.1 MANUFACTURED SHEET METAL ROOFING, SIDING, SOFFITS, ETC.

A. Manufacturers:
1. ALERT
2. AEP Span (SpanLok-HP, Smooth flat Panel)
3. MBCI. –BattenLock, Smooth flat panel
4. LM Curbs – Mechanical Equipment supports, Roof Curbs and Unistrut Roof Walkways connected with S-5-U connectors
5. Substitutions: Section 01630 - Product Requirements.

B. Structural Standing Seam Metal Roofing: Factory formed metal roofing panel system with concealed fasteners:
1. Roof Panel Materials: Pre-finished steel sheet 22 gauge base metal, minimum thickness
2. Panel Width: Nominal 16 inches
3. Panel Profile: Flat Panel (Striations, ribs or pencil ribs are unacceptable)
4. Color: Pre-finished Galvalume.
5. Length – 80' long panels maximum ; continuous length without joints.

C. Wall panels, for gable ends, fascias, siding, or as shown on drawings:
1. Wall Panel Materials: Pre-finished steel sheet 24 gauge base metal, minimum thickness.
2. Panel Width: Nominal 36 inches
3. Panel Profile: R- panel profile
4. Color: Pre-finished Kynar. Color as specified by Architect.

D. Roof Curbs: LM Curbs

E. Roof Walkways: LM Curbs

F. Metal Soffit Panels: Factory formed metal soffit panel system with concealed fasteners:
1. Panel Materials: Pre-finished steel sheet 24 gauge base metal thickness
2. Panel Width: Nominal 12 inches
3. Panel Profile: Flat and perforated or punched as shown on drawings (.032" painted aluminum for perforated panels)
4. Panel Depth: Nominal 1/2 inches

5. Panel Joint: Interlocked
6. Perforated panels shall have 1/8” round perforations on 0.324” centers with a minimum of 13% open area
7. Minimum 24 gauge metal thickness with L12B male/female edges
8. Color: Pre-finished Kynar. Color as specified by Architect.

2.2 SHEET METAL MATERIALS

A. Pre-Finished Galvalume Steel Sheet: ASTM A792 coil coated.
   1. Base Metal: ASTM A792/A792M - Standard Specification for Steel Sheet, 55% Aluminum-Zinc Alloy Coated by the Hot-Dip Process, General Requirements
   2. Unexposed Finish: Manufacturer’s standard Acrylic coating.

2.3 ACCESSORIES

A. Fasteners: Same material and finish as roofing metal, with soft neoprene washers where exposed.

B. Curbs and all accessories to be provided by or approved by Manufacturer.

C. Field Sealants:
   1. Color coordinated primerless polyurethane in exposed locations and high grade non-skinning nondrying synthetic butyl where there is no exterior exposure such as between laps.
   2. Refer to section 07900 of these specifications.
   3. Do not use sealants containing asphalt.

2.4 FABRICATION

A. Panels:
   1. Provide factory formed panel widths of 16", with a 2" high standing seam. Form sections shape as indicated on Drawings, accurate in size, square, and free from distortion or defects. Form panels and accessories in factory utilizing fixed base roll-formers and provide signed affidavit verifying factory fabrication. The use of portable roll-formers is specifically prohibited.
   2. On-site or field roll-formed panels are not acceptable.
   3. Provide panels in full length from ridge to eave.
   4. Roof panels shall have flush horizontal and vertical surfaces to facilitate sealing at terminations. Panel configurations that create voids and require supplemental closure devices are acceptable.

B. Seams:
   1. Panel seams shall interlock entire length of seam.
   2. Design standing seam to lock up and resist joint disengagement during design wind uplift conditions as calculated to comply with local building codes and design uplift criteria.
   3. Provide factory sealant within confines of trailing edge of female seam leg to aid in resistance of leaks and provide panel-to-panel seal while allowing

expansion and contraction movement, and the seams shall be continuously locked or crimped together by mechanical means during installation.

C. Clips:
1. Provide UL listed clip designed to allow panels to thermally expand and contract and provide a minimum of ± 1 inch of thermal movement. Clip shall incorporate a self-centering feature to allow a minimum of 1" of movement in both directions along panel length.
2. Clip shall be designed to meet positive and negative pressures as calculated per local building code and as engineered by the roofing system Manufacturer.
3. Provide two-piece floating clips to allow vertical adjustment to assure alignment.

D. Anchors: Engineer panels to use concealed anchors that permit expansion and contraction, except at end laps, ridges and hips.
1. Fabricate cleats of same material as sheet, to interlock with sheet.

E. Fascias/Trim/Flashings:
1. Pre-finished sheet metal designed by the Manufacturer in the same gauge, material and finish as the structural standing seam metal roofing system.
2. Locations, design, sealing and fastening methods as per the Manufacturer's approved engineered shop drawings.
3. Fabricate fascia, trim, flashing, and other metal components from same material as metal roof panels. Provide exposed metal surfaces with same finish as exposed face of metal roof panels.

F. Fabricate starter strips of same material and color as sheet, continuous, to interlock with sheet.

G. Form flashing and edging pieces in longest practical lengths overlapping and sealing with down slope pieces or adjacent pieces or horizontal planes in accordance with roofing Manufacturer's specifications.

H. Hem exposed edges on underside 1/2 inch; miter and seam corners.

I. At moving joints, use sealed lapped, bayonet-type or interlocking hooked seams in accordance with Roofing Manufacturer's Specifications.

J. Fabricate corners from one piece with minimum 18 inch long legs; seam for rigidity, seal with sealant as and if necessary in same color as roof panels.

K. Fabricate vertical faces with bottom edge formed outward 1/4 inch and hemmed to form drip. (where applicable)

2.5 FINISH

A. Pre-Finished Galvalume Steel Sheet: ASTM A792 coil coated.

PART 3 - EXECUTION

3.1 CONNECTING WORK

A. General:
1. Field cut materials by shearing only cutting by torch or saw is not permitted.
2. Do not apply roofing during inclement weather.
3. Do not apply roofing to damp or frozen deck surface.
4. Do not expose materials vulnerable to water, wind or sun damage in quantities greater than can be weatherproofed during the same day.
5. Rigidly fasten Ridge of metal roof panels and allow free eave movement due to thermal expansion and contraction per the approved shop drawings.
6. Install screws and fasteners with power tools having controlled torque.
7. Locate and space fasteners per the approved shop drawings in true vertical and horizontal alignment.
8. Install Ridge, Hip and penetration flashings per the approved shop drawings as work progresses.

B. Surfaces: The Panel Applicator shall examine all surfaces on which their work is to be applied, and shall notify the architect in writing if not suitable to receive their work. Work on any surface shall constitute acceptance of this surface by the Panel Applicator. After beginning installation, install approximately 500 square feet of panels for Architect's approval, before proceeding with substantial work.

C. Wood Members, Units: Provide wood pressure treated with water-borne preservatives for above ground use. All nailers shall be anchored sufficiently to resist a force of 75 pounds per linear foot in any direction. Provide nailers at all locations required by the roofing Manufacturer (whether shown or not).

3.2 FIELD MEASUREMENTS

A. Field Verification: Panel Applicator must take field measurements to verify or supplement dimensions indicated prior to fabrication of any materials. Where field measurements cannot be made without delaying the work, either establish opening dimensions and proceed with fabricating panels without field measurements or allow for trimming panel units.

3.3 EXAMINATION

A. Section 01300 - Administrative Requirements: Verification of existing conditions before starting work.

B. Metal Hat Channel Substrate (not applicable with engineered component system):
1. Inspect Hat Channels to verify Channels are clean and smooth, free of depressions, waves, or projections, and properly spaced to eaves.
2. Verify hat channel is dry.
3. Verify substrate joints are solidly supported and fastened.

C. Structural Framing Substrate:

1. Verify primary and secondary framing members are installed and fastened, properly aligned and sloped to eaves.
2. Verify eave, soffit and fascia portions of framing are properly aligned, even with no waves depressions or projections and are properly spaced. Do not begin roof panel installation until all deviations are corrected.
3. Verify damaged shop coatings are repaired with touch up paint per Manufacturer's specifications.

D. Verify roof openings, curbs, pipes, sleeves, ducts, or vents through new roof are solidly set, reglets are in place, and securing strips located and adequate for weather tight seals.

E. Verify roofing termination and base flashings are in place, sealed, and secure.

F. Verify insulation is installed with no tears or inconsistencies and ready for roof application.

3.4 PREPARATION

A. Back paint concealed metal surfaces and surfaces in contact with dissimilar metals with protective backing paint to minimum dry film thickness of 15 mil.

3.5 ROOF AND PANEL LAYOUT

A. Measure roof structure before starting.

B. Check substrate for plane and evenness.

C. Layout areas and check for squareness.

D. Balance layout around all penetrations.

E. Equalize first and last panels in a run.

F. Consider all gables and rakes to be "flying".

G. Square off eave lines.

H. Starter panels should be cut to module.

I. Use offset lines to maintain alignment.

J. Identify panel clip layout and spacing.

K. Chalk layout lines for permanent layout.

3.6 INSTALLATION - STANDING SEAM METAL ROOFING

A. Know and follow approved shop drawings.

B. Limit exposure time of underlayments.

C. Check and double check all clip spacings.

D. Check layout often to prevent module gain.

E. Allow for proper thermal movement.

F. Use proper fasteners and sealants.

G. Remove all drill shavings and metal scraps.

H. Install furring to support roof panel side laps and receive fasteners. Use concealed fasteners only.

I. Floating connection at eave end of panel. Conceal fixed ends.

J. Install roofing panels with long dimension perpendicular to eaves terminating 1/4" from end of metal drip edge.

K. Install roofing panels full length from ridge vent to 1/4” from eave drip edge.

L. Any partial panels must be rigidly fixed at one end only. Fixed end must be clearly indicated on shop drawings

M. Install 2.5” articulating clips in accordance with roofing Manufacturer’s Specification to secure roof panels without deforming or oil-canning roof panels.

N. Machine form standing seam between adjacent roofing panels. Hand form joints where machine forming is not possible.

O. Terminate roofing panels with sheet metal trim and flashing for watertight installation. Close and conceal openings between roofing panels, panel seams, and roof substrate in accordance with roofing Manufacturer’s Specification.

P. Paint and hem all edges and ends of roof panels which have been trimmed or cut.

Q. Seal metal joints watertight.

R. Where and if caulk sealant is used sealant must match roofing color.

S. Joints or gaps requiring sealant must be less than 1/16" or reinstallation must occur.

T. Install valleys when needed in one piece. If overlap is necessary, overlap one foot and seal down slope, a minimum 3 feet from end of valley.

3.7 INSTALLATION - SOFFIT PANELS

A. Install perimeter trim, level and aligned perpendicular with fascia.

B. Install soffit panels to form flat, flush surface.

C. Fit soffit panels in single length between perimeter trim.

D. Install perforated soffit panels at locations indicated on Drawings.

E. Adjust panels for uniform joints aligning with roofing flutes where adjacent.

3.8 PROTECTION OF INSTALLED CONSTRUCTION

A. Section 01700 - Execution Requirements: Protecting installed construction.

B. Do not permit traffic over unprotected roof surface.

C. Provide water stop protection at end of every working day to prevent any water infiltration into building. If roof leaks occur, Contractor will respond to emergency calls within 4 hours notice.

END OF SECTION

SECTION - 07614

PREFABRICATED METAL BUILDING ROOF CURBS

PART 1 - GENERAL

1.1 SUMMARY

A. The general conditions and supplemental general conditions of the contract apply to this section as if completely written herein.

B. The General Contractor shall provide all labor, material and equipment to completely install prefabricated Metal Roof Curbs.

C. Prefabricated Metal Roof Curbs shall be used at all roof penetrations including but not limited to HVAC units, skylights, duct openings, pipe penetrations, and exhaust fans.

PART 2 - PRODUCTS

2.1 Prefabricated Metal Roof Curbs shall be manufactured by LMCurbs or approved equal. (LMCurbs, 609 Fisher Road (P.O. Box 5299), Longview, Texas 75604 (75608-5299), 1-903-759-1331, 1-800-284-1412, Fax # 903-759-0879)

PART 3 - CONSTRUCTION

3.1 Curbs shall be constructed using minimum .080, 3003H14 aluminum, or heavier as required to support the load of the equipment, with fully mitered and heli-arc welded corners, integral base plates, with water diverter cricket. Factory installed insulation available upon request.

3.2 Minimum height of Curb shall be 8" above finished roof (or as specified).

3.3 Curbs shall be constructed to match slope of roof and provide a level top surface for mounting of equipment.

3.4 Curb flange shall be constructed to match configuration of roof panel. Side flange shall extend to the next natural seam in the roof panels and conform to seam configurations.

PART 4 - COORDINATION

4.1 Size of curbs and required options shall be coordinated by curb Manufacturer, General Contractor, and mechanical Contractor prior to fabrication.

4.2 Shop drawings bearing architects approval shall be used for the fabrication of the curbs.

END OF SECTION

SECTION 07840

FIRESTOPPING

PART 1 - GENERAL

1.1 SUMMARY

A. Section includes firestopping and through-penetration protection system materials and accessories; firestopping tops of fire rated walls; and smoke sealing at joints between floor slabs and exterior walls.

B. Related Sections:
1. Section 07260 - Vapor Retarders: Vapor retarder materials to adjacent insulation
2. Section 09260 - Gypsum Board Assemblies: Gypsum board fireproofing
3. Division 15 - Mechanical: Mechanical work requiring firestopping
4. Division 16 - Electrical: Electrical work requiring firestopping.

1.2 REFERENCES

A. ASTM International:
1. ASTM E84 - Standard Test Method for Surface Burning Characteristics of Building Materials
2. ASTM E119 - Standard Test Methods for Fire Tests of Building Construction and Materials
3. ASTM E814 - Standard Test Method for Fire Tests of Through-Penetration Fire Stops.

B. Underwriters Laboratories Inc.:
1. UL 263 - Fire Tests of Building Construction and Materials
2. UL 723 - Tests for Surface Burning Characteristics of Building Materials
3. UL 1479 - Fire Tests of Through-Penetration Firestops
4. UL - Fire Resistance Directory.

C. Intertek Testing Services (Warnock Hersey Listed):
1. WH - Certification Listings.

1.3 DEFINITIONS

A. Firestopping (Through-Penetration Protection System): Sealing or stuffing material or assembly placed in spaces between and penetrations through building materials to arrest movement of fire, smoke, heat, and hot gases through fire rated construction.

1.4 SYSTEM DESCRIPTION

A. Firestopping Materials: ASTM E119, ASTM E814, UL 263, UL 1479, to achieve fire ratings of adjacent construction noted in accordance with UL Design Numbers noted on Drawings or noted in Schedule at end of this section.

B. Surface Burning: ASTM E84 UL 723 with maximum flame spread / smoke developed rating of 25/450.

C. Firestop interruptions to fire rated assemblies, materials, and components.

1.5 PERFORMANCE REQUIREMENTS

A. Conform to applicable code for fire resistance ratings and surface burning characteristics.

1.6 SUBMITTALS

A. Section 01330 - Submittal Procedures: Submittal procedures.

B. Product Data: Submit data on product characteristics, performance and limitation criteria.

C. Shop Drawings: For each through-penetration firestop system, show each type of construction condition penetrated, relationships to adjoining construction, and type of penetrating item. Include firestop design designation of qualified testing and inspecting agency that evidences compliance with requirements for each condition indicated.
1. Submit documentation, including illustrations, from a qualified testing and inspecting agency that is applicable to each through-penetration firestop system configuration for construction and penetrating items.
2. Where Project conditions require modification to a qualified testing and inspecting agency's illustration for a particular through-penetration firestop condition, submit illustration, with modifications marked, approved by through-penetration firestop system Manufacturer's fire-protection engineer as an engineering judgment or equivalent fire-resistance-rated assembly.

D. Schedule: Submit schedule of opening locations and sizes, penetrating items, and required listed design numbers to seal openings to maintain fire resistance rating of adjacent assembly.

E. Manufacturer's Installation Instructions: Submit preparation and installation instructions.

F. Manufacturer's Certificate: Certify products meet or exceed applicable code requirements.

G. Engineering Judgments: For conditions not covered by UL or WH listed designs, submit judgments by licensed professional engineer suitable for presentation to authority having jurisdiction for acceptance as meeting code fire protection requirements.

H. Qualification Data: For Installer

1.7 QUALIFICATIONS

A. Manufacturer: Company specializing in manufacturing products specified in this section with minimum three years documented experience.

B. Applicator: Company specializing in performing Work of this section with minimum three years documented experience.

1.8 DELIVERY, STORAGE, AND HANDLING

A. Section 01600 - Product Requirements: Product storage and handling requirements.

B. Deliver through-penetration firestop system products to Project site in original, unopened containers or packages with intact and legible Manufacturers' labels identifying product and Manufacturer, date of manufacture, lot number, shelf life if applicable, qualified testing and inspecting agency's classification marking applicable to Project, curing time, and mixing instructions for multicomponent materials.

C. Store and handle materials for through-penetration firestop systems to prevent their deterioration or damage due to moisture, temperature changes, contaminants, or other causes.

1.9 MOCKUP

A. Section 01400 - Quality Requirements: Requirements for mockup.

B. Apply 1 linear ft of each type of linear firestopping material to representative substrate surface.

C. Apply one of each unit type of firestopping material, such as penetrations through fire rated partition, to representative application.

D. Locate where directed by Architect/Engineer.

E. Incorporate accepted mockup as part of Work.

1.10 ENVIRONMENTAL REQUIREMENTS

A. Section 01600 - Product Requirements.

B. Do not apply materials when temperature of substrate material and ambient air is below 60 degrees F.

C. Maintain this minimum temperature before, during, and for minimum 3 days after installation of materials.

D. Provide ventilation in areas to receive solvent cured materials.

E. Coordinate construction of openings and penetrating items to ensure that through-penetration firestop systems are installed according to specified requirements.

F. Do not cover up through-penetration firestop system installations that will become concealed behind other construction until each installation has been examined by building inspector, if required by authorities having jurisdiction.

PART 2 - PRODUCTS

2.1 FIRESTOPPING

A. Manufacturers:
1. A/D Fire Protection Systems, Inc. Model Firebarrier Firestop Systems
2. Grace Construction Model Flamesafe
3. Hilti Corp. Model Firestop
4. Pecora Corporation Model Firestop
5. USG Corp. Model Firecode
6. Substitutions: Section 01600 - Product Requirements.

B. Product Description: Different types of products by multiple Manufacturers are acceptable as required to meet specified system description and performance requirements; provide only one type for each similar application.
1. Silicone Firestopping Elastomeric Firestopping: Single component silicone elastomeric compound and compatible silicone sealant.
2. Foam Firestopping Compounds: Single component foam compound.
3. Formulated Firestopping Compound of Incombustible Fibers: Formulated compound mixed with incombustible non-asbestos fibers.
4. Fiber Stuffing and Sealant Firestopping: Composite of mineral fiber stuffing insulation with silicone elastomer for smoke stopping.
5. Mechanical Firestopping Device with Fillers: Mechanical device with incombustible fillers and silicone elastomer, covered with sheet stainless steel jacket, joined with collars, penetration sealed with flanged stops.
6. Intumescent Firestopping: Intumescent putty compound which expands on exposure to surface heat gain.
7. Firestop Pillows: Formed mineral fiber pillows.

C. Color: As selected from Manufacturer’s full range of colors.

2.2 ACCESSORIES

A. Primer: Type recommended by firestopping Manufacturer for specific substrate surfaces and suitable for required fire ratings.

B. Installation Accessories: Provide clips, collars, fasteners, temporary stops or dams, and other devices required to position and retain materials in place.

C. Tape: Pressure sensitive masking tape as recommended by the firestopping Manufacturer.

PART 3 - EXECUTION

3.1 EXAMINATION

A. Section 01300 - Administrative Requirements: Coordination and project conditions.

B. Verify openings are ready to receive firestopping.

C. Examine substrates, openings, voids, adjoining construction and conditions under which the Work is to be installed. Confirm compatibility of surfaces scheduled to receive firestopping.

D. Verify that penetrating elements are securely fixed and properly located with the proper space allowance between penetrations and surfaces of openings.

E. Do not proceed with Work until unsatisfactory conditions have been corrected.

3.2 PREPARATION

A. Clean substrate surfaces of dirt, dust, grease, oil, loose material, or other matter affecting bond of firestopping material.

B. Remove incompatible materials affecting bond. Do not apply firestopping and smoke seals to surfaces previously painted or treated with sealers, curing compounds, water repellent or other coatings unless tests have been performed to ensure compatibility of materials. Remove coatings as required.

C. Ensure that anchoring devices, back-up materials, clips, sleeves, supports and other related materials used in the actual fire tests are provided.

D. Install backing or damming materials to arrest liquid material leakage.

3.3 APPLICATION

A. Install material at fire rated construction perimeters and openings containing penetrating sleeves, piping, ductwork, conduit and other items, requiring firestopping.

B. Apply primer where recommended by Manufacturer for type of firestopping material and substrate involved, and as required for compliance with required fire ratings.

C. Apply firestopping material in sufficient thickness to achieve required fire and smoke rating, to uniform density and texture.

D. Compress fibered material to maximum 40 percent of its uncompressed size or per Manufacturers' recommendation.

E. Place foamed material in layers to ensure homogenous density, filling cavities and spaces. Place sealant to completely seal junctions with adjacent dissimilar materials.

F. Remove dam material after firestopping material has cured.

3.4 FIELD QUALITY CONTROL

A. Section 01400 - Quality Requirements: Testing and Inspection Services.

B. Inspect installed firestopping for compliance with specifications and submitted schedule.

C. Notify Consultant when completed installations are ready for inspection prior to concealing or enclosing an area containing firestopping materials.

D. Following field inspections, provide all repair as required to ensure compliance.

3.5 CLEANING

A. Section 01700 - Execution Requirements: Final cleaning.

B. Clean adjacent surfaces of firestopping materials.

3.6 PROTECTION OF INSTALLED CONSTRUCTION

A. Section 01700 - Execution Requirements: Protecting installed construction.

B. Protect adjacent surfaces from damage by material installation.

3.7 SCHEDULES

A. Where UL-classified systems are indicated, they refer to alpha-alpha-numeric designations listed in UL's "Fire Resistance Directory" under product Category XHEZ. Systems below are based on Hilti Firestopping Systems. Other equivalent systems allowed upon approval.

B. Firestop Systems for Metallic Pipes, Conduit, or Tubing FS-1:
   1. UL-Classified Systems: WL 1085 for 1 or 2 hour rated partitions. WL 1111 for 3 hour rated partitions.

C. Firestop Systems for Nonmetallic Pipe, Conduit, or Tubing FS-2:
   1. UL-Classified Systems: WL 2078 for 1 or 2 hour rated partitions. Verify design with Manufacturer for 3 hour rated partitions.

D. Firestop Systems for Electrical Cables FS-3:
   1. UL-Classified Systems: WL 3111 for 1 hour or 2 hour partitions. Verify with Manufacturer for 3 hour rated partitions.

E. Firestop Systems for Cable Trays FS-4:
   1. UL-Classified Systems: WL 4019 for 1 hour or 2 hour partitions. Verify with Manufacturer for 3 hour rated partitions.

F. Firestop Systems for Insulated Pipes FS-5:
   1. UL-Classified Systems: WL 5029 for 1 hour or 2 hour partitions. WL 5073 for 3 hour rated partitions.

G. Firestop Systems for Groupings of Penetrants FS-7:
   1. UL-Classified Systems: WL 8013 for 1 hour or 2 hour partitions. WL 8014 for 3 hour rated partitions.

END OF SECTION

SECTION 07900

JOINT SEALERS

PART 1 - GENERAL

1.1 SUMMARY

A. Section includes sealants and joint backing, precompressed foam sealers, and accessories.

B. Related Sections:
1. Section 07260 - Vapor Retarders: Sealants required in conjunction with vapor retarders
2. Section 07270 - Air Barriers: Sealants required in conjunction with air barriers
3. Section 07840 - Firestopping: Firestopping sealants
4. Section 09260 - Gypsum Board Assemblies: Acoustic sealant
5. Section 09300 - Tile: Sealant used as tile grout.

1.2 REFERENCES

A. ASTM International:
1. ASTM C834 - Standard Specification for Latex Sealants
2. ASTM C919 - Standard Practice for Use of Sealants in Acoustical Applications
3. ASTM C920 - Standard Specification for Elastomeric Joint Sealants
4. ASTM C1193 - Standard Guide for Use of Joint Sealants
5. ASTM D1056 - Standard Specification for Flexible Cellular Materials-Sponge or Expanded Rubber
6. ASTM D1667 - Standard Specification for Flexible Cellular Materials-Vinyl Chloride Polymers and Copolymers (Closed-Cell Foam)
7. ASTM D2628 - Standard Specification for Preformed Polychloroprene Elastomeric Joint Seals for Concrete Pavements.

1.3 SUBMITTALS

A. Section 01330 - Submittal Procedures: Submittal procedures.

B. Products Data: Submit data indicating sealant chemical characteristics, performance criteria, substrate preparation, limitations, and color availability.

C. Product Certificates: For each type of joint sealant and accessory, signed by product Manufacturer.

D. Samples for Initial Selection: Manufacturer's color charts consisting of strips of cured sealants showing the full range of colors available for each product exposed to view.

E. Samples for Verification: For each type and color of joint sealant required, provide Samples with joint sealants in 1/2-inch- wide joints formed between two 6-inch- long strips of material matching the appearance of exposed surfaces adjacent to joint sealants.

F. Manufacturer's Installation Instructions: Submit special procedures, surface preparation, and perimeter conditions requiring special attention.

G. SWRI Validation Certificate: For each elastomeric sealant specified to be validated by SWRI's Sealant Validation Program.

H. Product Test Reports: Based on comprehensive testing of product formulations performed by a qualified testing agency, indicating that sealants comply with requirements.

I. Warranty: Include coverage for installed sealants and accessories failing to achieve airtight seal, exhibit loss of adhesion or cohesion, and sealants which do not cure.

1.4 QUALITY ASSURANCE

A. Source Limitations: Obtain each type of joint sealant through one source from a single Manufacturer.

B. Product Testing: Obtain test results for "Product Test Reports" Paragraph in "Submittals" Article from a qualified testing agency based on testing current sealant formulations within a 36-month period preceding the Notice to Proceed with the Work.

1. Testing Agency Qualifications: An independent testing agency qualified according to ASTM C 1021 to conduct the testing indicated, as documented according to ASTM E 548.
2. Test elastomeric joint sealants for compliance with requirements specified by reference to ASTM C 920, and where applicable, to other standard test methods.
3. Test elastomeric joint sealants according to SWRI's Sealant Validation Program for compliance with requirements specified by reference to ASTM C 920 for adhesion and cohesion under cyclic movement, adhesion-in-peel, and indentation hardness.
4. Test other joint sealants for compliance with requirements indicated by referencing standard specifications and test methods.

1.5 QUALIFICATIONS

A. Manufacturer: Company specializing in manufacturing products specified in this section with minimum three years documented experience.

B. Applicator: Company specializing in performing Work of this section with minimum three years documented experience. Approved by Manufacturer, if required by warranty.

1. Qualifications data: For firms and persons to demonstrate their capabilities and experience. Include lists of complete projects with names and addresses, and name and addresses of architects and owners.

1.6 DELIVERY, STORAGE, AND HANDLING

A. Section 01600 - Product Requirements: Product storage and handling requirements.

B. Deliver materials and products to Project site in original, unopened containers or packages with intact and legible Manufacturers' labels identifying product and Manufacturer, date of manufacture, lot number, shelf life if applicable, qualified testing and inspecting agency's classification marking applicable to Project, curing time, and mixing instructions for multi-component materials.

C. Store and handle materials in compliance with Manufacturers written instructions to prevent their deterioration or damage due to moisture, temperature changes, contaminants, or other causes.

1.7 MOCKUP

A. Section 01400 - Quality Requirements: Requirements for mockup.

B. Construct mockup of sealant joints in conjunction with wall mockups specified in other sections.

C. Construct mockup with specified sealant types and with other components noted.
1. Determine preparation and priming requirements based on Manufacturers recommendations; take action necessary for correction of failure of sealant tests on mock-up.
2. Verify sealants, primers, and other components do not stain adjacent materials.

D. Locate where directed by Architect/Engineer.

E. Incorporate accepted mockup as part of Work.

1.8 ENVIRONMENTAL REQUIREMENTS

A. Section 01600 - Products Requirements.

B. Maintain temperature and humidity recommended by sealant Manufacturer during and after installation.

C. Do not proceed with installation of joint sealants under the following conditions:
1. When ambient and substrate temperature conditions are outside limits permitted by joint-sealant Manufacturer or are below 40 deg F.
2. When joint substrates are wet.
3. Where joint widths are less than those allowed by joint-sealant Manufacturer for applications indicated.
4. Contaminants capable of interfering with adhesion have not yet been removed from joint substrates.

1.9 COORDINATION

A. Section 01300 - Administrative Requirements: Coordination and project conditions.

B. Coordinate Work with sections referencing this section.

1.10 WARRANTY

A. Special Installer's Warranty: Installer's standard form in which Installer agrees to repair or replace elastomeric joint sealants that do not comply with performance and other requirements specified in this Section within specified warranty period.
   1. Warranty Period: Two years from date of Substantial Completion.

B. Special Manufacturer's Warranty: Manufacturer's standard form in which elastomeric sealant Manufacturer agrees to furnish elastomeric joint sealants to repair or replace those that do not comply with performance and other requirements specified in this Section within specified warranty period.
   1. Warranty Period: Ten years from date of Substantial Completion.

C. Special warranties specified in this Article exclude deterioration or failure of elastomeric joint sealants from the following:
   1. Movement of the structure resulting in stresses on the sealant exceeding sealant Manufacturer's written specifications for sealant elongation and compression caused by structural settlement or errors attributable to design or construction.
   2. Disintegration of joint substrates from natural causes exceeding design specifications.
   3. Mechanical damage caused by individuals, tools, or other outside agents.
   4. Changes in sealant appearance caused by accumulation of dirt or other atmospheric contaminants.

PART 2 - PRODUCTS

2.1 JOINT SEALERS

A. Manufacturers:
   1. Sonneborn Building Products
   2. Pecora Corp.
   3. Tremco Sealant / Weatherproofing Division
   4. Substitutions: Section 01600 - Products Requirements.

2.2 MATERIALS, GENERAL

A. Compatibility: Provide joint sealants, backings, and other related materials that are compatible with one another and with joint substrates under conditions of service and application, as demonstrated by sealant Manufacturer, based on testing and field experience.

B. Colors of Exposed Joint Sealants: As selected by Architect from Manufacturer's full range.

C. Products Description: Sealant Type ___

1. High Performance General Purpose Exterior (Nontraffic) Sealant: Polyurethane; ASTM C920, Grade NS, Class 25, Uses M, G, and A; single component.
   a. Type: Sonolastic NP1 manufactured by Sonneborn.
   b. Color: Standard colors matching finished surfaces.
   c. Applications: Use for:
      1) Control, expansion, and soft joints in masonry
      2) Joints between concrete and other materials
      3) Joints between metal frames and other materials
      4) Other exterior nontraffic joints for which no other sealant is indicated.
2. General Purpose Traffic Bearing Sealant Polyurethane; ASTM C920, Grade P, Class 25, Use T; multi- component.
   a. Type: Sonolastic SL2 manufactured by Sonneborn
   b. Color: Standard colors matching finished surfaces
   c. Applications: Use for exterior and interior pedestrian and vehicular traffic bearing joints.
3. Exterior Foam Expansion Joint Sealer: Precompressed foam sealer; Polyurethane with water-repellent; products recommended by Manufacturer for traffic-bearing use.
   a. Type: Expansion-Joint Filler manufactured by Sonneborn
   b. Color: Face color as selected
   c. Size: As required to provide weathertight seal when installed
   d. Applications: Use for exterior wall expansion joints and parking deck expansion joints.
4. Exterior Metal Lap Joint Sealant: Butyl or polyisobutylene, non-drying, non-skinning, non-curing.
   a. Type: BC-158 manufactured by Pecora Corporation
   b. Applications: Use for concealed sealant bead in sheet metal work and concealed sealant bead in siding overlaps.
5. General Purpose Interior Sealant: Acrylic emulsion latex; ASTM C834, single component, paintable.
   a. Type: Sonolac manufactured by Sonneborn
   b. Color: Standard colors matching finished surfaces
   c. Applications: Use for interior wall and ceiling control joints, joints between door and window frames and wall surfaces, and other interior joints for which no other type of sealant is indicated.:
6. Mildew-resistant Sealant: One-part acetoxy silicone; ASTM C920, Uses G and A; single component, mildew resistant.
   a. Type: Omniplus manufactured by Sonneborn
   b. Applications: Use for joints between plumbing fixtures and floor and wall surfaces, and joints between break room and toilet room counter tops and wall surfaces.

7. Acoustical Sealant: Acrylic sealant; ASTM C920, Grade NS, Class 12-1/2, Uses M and A; single component, solvent release curing, non-skinning.
   a. Type: Tremflex manufactured by Tremco
   b. Applications: Use for concealed locations only at acoustically rated construction.
      1) Provide sealant bead between top stud runner and structure and between bottom stud track and floor.

2.3 ACCESSORIES

A. Primer: Non-staining type, recommended by sealant Manufacturer to suit application.

B. Joint Cleaner: Non-corrosive and non-staining type, recommended by sealant Manufacturer; compatible with joint forming materials.

C. Joint Backing: Round foam rod compatible with sealant; ASTM C 1330, closed cell PVC; oversized 30 to 50 percent larger than joint width.
   1. Type: Closed Cell backer rod manufactured by Sonneborn
   2. Type: Green Rod manufactured by Nomaco, Inc.

D. Bond Breaker: Pressure sensitive tape recommended by sealant Manufacturer to suit application.

E. Acoustical Tape: Premolded, closed cell PVC Foam Strip; Armaflex Insulation Tape manufactured by Armstrong.

PART 3 - EXECUTION

3.1 EXAMINATION

A. Section 01300 - Administrative Requirements: Coordination and project conditions.

B. Verify substrate surfaces and joint openings are ready to receive work.

C. Verify joint backing and release tapes are compatible with sealant.

D. Examine joints indicated to receive joint sealants, with Installer present, for compliance with requirements for joint configuration, installation tolerances, and other conditions affecting joint-sealant performance.
   1. Proceed with installation only after unsatisfactory conditions have been corrected.

3.2 PREPARATION

A. Remove loose materials and foreign matter impairing adhesion of sealant.

B. Clean and prime joints.

C. Perform preparation in accordance with ASTM C1193.

D. Protect elements surrounding Work of this section from damage or disfiguration.

3.3 INSTALLATION

A. Perform installation in accordance with ASTM C1193.

B. Perform acoustical sealant application work in accordance with ASTM C919.

C. Measure joint dimensions and size joint backers to achieve the following, unless otherwise indicated:
1. Width/depth ratio of 2: 1
2. Neck dimension no greater than 1/3 of joint width
3. Surface bond area on each side not less than 75 percent of joint width.

D. Install bond breaker where joint backing is not used.

E. Install sealant free of air pockets, foreign embedded matter, ridges, and sags.

F. Apply sealant within recommended application temperature ranges. Consult Manufacturer when sealant cannot be applied within these temperature ranges.

G. Tool joints concave, slightly below adjoining surfaces. Where horizontal joints are between a horizontal surface and vertical surface, fill joint to form a slight convex (cove), so that joint will not trap water or dirt.

H. Install sealants with complete ‘wetting’ of joint bonding surfaces equally on opposite sides.

I. Precompressed Foam Sealant: Do not stretch; avoid joints except at corners, ends, and intersections; install with face 1/8 to ¼ inch below adjoining surface.

J. Compression Gaskets: Avoid joints except at ends, corners, and intersections; seal joints with adhesive; install with face 1/8 to ¼ inch below adjoining surface.

3.4 CLEANING

A. Section 01700 - Execution Requirements: Final cleaning.

B. Clean adjacent soiled surfaces.

3.5 PROTECTION OF INSTALLED CONSTRUCTION

A. Section 01700 - Execution Requirements: Protecting installed construction.

B. Protect sealants until cured.

3.6 SCHEDULE

A. Exterior Joints for Which No Other Sealant Type is Indicated: Type1.

B. Control and Expansion Joints in Paving: Type 2.

C. Joints between Concrete Panels and Between Panels and Adjacent Work: Type 1.

D. Control, Expansion, and Soft Joints in Masonry, and Between Masonry and Adjacent Work: Type 1.

E. Lap Joints in Exterior Sheet Metal Work: Type 4.

F. Butt Joints in Exterior Metal Work and Siding: Type 1.

G. Joints between Exterior Metal Frames and Adjacent Work (except masonry): Type 1.

H. Under Exterior Door Thresholds: Type 4.

I. Interior Joints for Which No Other Sealant is Indicated: Type 5.

J. Control and Expansion Joints in Interior Concrete Slabs and Floors: Type 2.

K. Joints between Plumbing Fixtures and Walls and Floors, and Between Counter tops and Walls: Type 6.

L. In STC-Rated Walls, Between Metal Stud Track/Runner and Adjacent Construction , Between Outlet Boxes and Gypsum Board: Type 7.

END OF SECTION

SECTION 08110

STANDARD STEEL DOORS

PART 1 - GENERAL

1.1 SUMMARY

A. Section includes non-rated, fire rated, and thermally insulated steel doors.

B. Related Sections:
1. Section 04065 – Masonry Mortar and Grout
2. Section 05500 – Steel Lintels
3. Section 08710 – Finish Hardware
4. Section 08800 - Glazing: Glass for doors
5. Section 09900 - Painting and Coatings: Field painting of doors.

1.2 REFERENCES

A. American National Standards Institute:
1. ANSI A250.8 - Recommended Specifications for Standard Steel Doors and Frames.

B. ASTM International:
1. ASTM A653/A653M - Standard Specification for Steel Sheet, Zinc-Coated (Galvanized) or Zinc-Iron Alloy-Coated (Galvannealed) by the Hot-Dip Process
2. ASTM C1363 - Standard Test Method for the Thermal Performance of Building Assemblies by Means of a Hot Box Apparatus
3. ASTM E413 - Standard Classification for Rating Sound Insulation.

C. Hollow Metal Manufacturers Association:
1. HMMA 810 - Hollow Metal Doors.

D. National Fire Protection Association:
1. NFPA 80 - Standard for Fire Doors, Fire Windows
2. NFPA 252 - Standard Methods of Fire Tests of Door Assemblies.

E. Steel Door Institute:
1. SDI 108 - Recommended Selection and Usage Guide for Standard Steel Doors.

F. Underwriters Laboratories Inc.:
1. UL 10B - Fire Tests of Door Assemblies.

G. Uniform Building Code:
1. UBC Standard 7-2 - Fire Tests of Door Assemblies.

1.3 SUBMITTALS

A. Section 01330 - Submittal Procedures: Requirements for submittals.

B. Shop Drawings: In addition to requirements below, provide a schedule of standard steel doors and frames using same reference numbers for details and openings as those on Drawings Schedule:
   1. Elevations of each door design
   2. Details of doors, including vertical and horizontal edge details
   3. Frame details for each frame type, including dimensioned profiles
   4. Details and locations of reinforcement and preparations for hardware
   5. Details of each different wall opening condition
   6. Details of anchorages, accessories, joints, and connections
   7. Details of glazing frames and stops showing glazing
   8. Details of conduit and preparations for electrified door hardware and controls.

C. Product Data: Submit door configurations, location of cut-outs for hardware reinforcement. Include construction details, material descriptions, core descriptions, label compliance, fire-resistance rating, and finishes for each type of steel door and frame specified.

D. Oversize Construction Certification: For standard steel door assemblies required to be fire rated and exceeding limitations of labeled assemblies; include statement that doors comply with requirements of design, materials, and construction but have not been subjected to fire test.

E. Qualification Data: For Installer.

F. Samples: Submit two samples of door face metal, 8 x 8 inch in size illustrating shop finish colors and surface texture.

G. Manufacturer's Installation Instructions: Submit special installation instructions.

H. Manufacturer's Certificate: Certify Products meet or exceed specified requirements.

I. Product Test Reports: Based on evaluation of comprehensive fire tests performed by a qualified testing agency, for each type of standard steel door and frame.

1.4 QUALITY ASSURANCE

A. Provide Steel Doors and Frames complying with the Steel Door Institute recommended specifications for Standard Steel Doors and Frames ANSI/SDI 100 (latest edition).

B. Steel Doors and Frames shall be Manufactured to high quality standards in manufacturing facilities with annual certified conformance to ISO9001.

C. Perform Work in accordance with ANSI A250.8.

D. Fire Rated Door Construction: Conform to NFPA 252 or UL 10B.

E. Installed Door Assembly: Conform to NFPA 80 for fire rated class as scheduled.

F. Maintain one copy copies of each document on site.

1.5 QUALIFICATIONS

A. Manufacturer: Company specializing in manufacturing Products specified in this section with minimum three years documented experience.

B. Installer: Company specializing in performing work of this section with minimum three years documented experience and approved by Manufacturer.

1.6 DELIVERY, STORAGE, AND HANDLING

A. Section 01600 - Product Requirements: Requirements for transporting, handling, storing, and protecting products.

B. Doors and frames must be properly marked with door opening mark number to correspond with the schedule.

C. Deliver all steel doors with corrugated edge protection and palletized to provide protection during transit and job storage.

D. Inspect doors and frames upon delivery for damage. Minor damage is to be repaired, provided the repair is equal to new work and acceptable to the architect.

E. Store doors and frames at the job site under cover. Place units on wood sills on the floor in a manner that will prevent rust and damage. Avoid the use of non-vented plastic or canvas shelters, which could create a humidity chamber. If the wrapper on the door becomes wet, remove the carton immediately. Provide a 1/4 inch space between stacked doors to promote air circulation.

F. Accept doors on site in Manufacturer's packaging. Inspect for damage.

G. Break seal on site to permit ventilation.

1.7 COORDINATION

A. Section 01300 - Administrative Requirements: Requirements for coordination.

B. Coordinate Work with door opening construction, door frame, and door hardware installation.

PART 2 - PRODUCTS

2.1 STANDARD STEEL DOORS

A. Manufacturers:
1. Ceco Door Products Model Medallion, Regent, Imperial door
2. Republic Builders Products Model DB, DS doors
3. Steelcraft Model LW18-Series
4. Substitutions: Section 01600 - Product Requirements.

B. Product Description:
   1. Exterior Doors (Insulated): ANSI A250.8, 1-3/4 inch thick.
      a. Level 2 - Heavy Duty, Model 2, seamless design.
   2. Interior Doors (Non-Rated): ANSI A250.8, 1-3/4 inch thick.
      a. Level 2 - Heavy Duty, Model 2, seamless design.
   3. Interior Doors (Fire Rated): ANSI A250.8, 1-3/4 inch thick.
      a. Level 2 - Heavy Duty, Model 2, seamless design.

2.2 COMPONENTS

A. Face: Steel sheet in accordance with by referencing ANSI A250.8 for level and model and ANSI A250.4 for physical-endurance level. Door, 18 Gage minimum steel thickness.

B. Closure reinforcement: 12 Gage Steel

C. End Channel, 16 Gage Steel end channels, inverted. Plastic fillers are NOT acceptable.

D. Exterior Door Core at Shop / Storage: Vertical steel stiffeners with insulation.

E. Exterior Door Core at Office: Thermal Insulated Door, Rigid polystyrene, chemically bonded. Total insulation R-Value of R-9

F. Interior Door Core: Cardboard honeycomb with waterproof, contact adhesive.

G. Handed door.

H. Beveled hinge and lock edges.

I. Hinge reinforcement not less than 7 gage steel.

J. Sound Rated Door: STC of 32, measured in accordance with ASTM E413.

2.3 ACCESSORIES

A. Removable Stops: Rolled steel, channel shape, mitered corners; prepared for countersink style screws. Minimum 0.032 inch thick, fabricated from same material as door face sheet in which they are installed.

B. Primer: ANSI A250.10 rust inhibitive type.

2.4 FABRICATION

A. Fabricate doors with hardware reinforcement welded in place.

B. Attach fire rating label to each fire rated door.

C. Configure exterior doors with edge profile to receive recessed weather stripping.

2.5 SHOP FINISHING

A. Steel Sheet: Galvanized to ASTM A924 A60.

B. Primer: Oven Baked.

PART 3 - EXECUTION

3.1 EXAMINATION

A. Section 01300 - Administrative Requirements: Verification of existing conditions before starting work.

B. Verify opening sizes and tolerances are acceptable.

3.2 INSTALLATION

A. Install doors in accordance with ANSI A250.8.

B. Install door louvers, plumb and level.

C. Coordinate installation of glass and glazing specified in Section 08800.

D. Coordinate installation of doors with installation of frames specified in Section 08115 and hardware specified in Section 08710.

E. Touch-up damaged shop finishes.

3.3 ERECTION TOLERANCES

A. Section 01400 - Quality Requirements: Tolerances.

B. Maximum Diagonal Distortion: 1/16 inch measured with straight edge, corner to corner.

3.4 ADJUSTING

A. Section 01700 - Execution Requirements: Requirements for adjusting.

B. Adjust door for smooth and balanced door movement.

3.5 SCHEDULE

A. Refer to Door and Frame Schedule on drawings.

END OF SECTION

SECTION 08115

STANDARD STEEL FRAMES

PART 1 - GENERAL

1.1 SUMMARY

A. Section includes fire rated and non-rated, steel frames.

B. Related Sections:
1. Section 03300 - Cast-In-Place Concrete: Placement of anchors into masonry wall construction]
2. Section 04820 – Reinforced Unit Masonry Assemblies: Masonry grout fill of metal frames and placement of anchors into masonry wall construction
3. Section 08114 - Standard Steel Doors
4. Section 08710 - Door Hardware: Hardware, silencers, and weather-stripping
5. Section 08800 - Glazing.

1.2 REFERENCES

A. American National Standards Institute:
1. ANSI A250.8 - Recommended Specifications for Standard Steel Doors and Frames.

B. ASTM International:
1. ASTM A591/A591M - Standard Specification for Steel Sheet, Electrolytic Zinc-Coated, for Light Coating Mass Applications
2. ASTM A653/A653M - Standard Specification for Steel Sheet, Zinc-Coated (Galvanized) or Zinc-Iron Alloy-Coated (Galvannealed) by the Hot-Dip Process.

C. National Fire Protection Association:
1. NFPA 80 - Standard for Fire Doors, Fire Windows
2. NFPA 252 - Standard Methods of Fire Tests of Door Assemblies.

D. Underwriters Laboratories Inc.:
1. UL 10B - Fire Tests of Door Assemblies.

E. Uniform Building Code:
1. UBC Standard 7-2 - Fire Tests of Door Assemblies.

1.3 SUBMITTALS

A. Section 01330 - Submittal Procedures: Submittal procedures.

B. Shop Drawings: Indicate frame elevations, reinforcement, anchor types and spacing, location of cut-outs for hardware, and finish.
1. Elevations of each frame design

2. Details of frame, including vertical and horizontal edge details
3. Details and locations of reinforcement and preparations for hardware
4. Details of each different wall opening condition
5. Details of anchorages, accessories, joints, and connections
6. Details of conduit and preparations for electrified door hardware and controls.

C. Product Data: Submit frame configuration and finishes. Include construction details, material descriptions, label compliance, fire-resistance rating, and finishes for each type of frame specified.

D. Samples: Submit two samples of frame, 8” x 8” inch in size illustrating factory finished frame colors and surface texture.

E. Manufacturer's Installation Instructions: Submit special installation instructions.

F. Manufacturer's Certificate: Certify products meet or exceed specified requirements.

G. Qualification Data: For Installer.

H. Product Test Reports: Based on evaluation of comprehensive fire tests performed by a qualified testing agency, for each type of standard steel door and frame.

1.4 QUALITY ASSURANCE

A. Conform to requirements of ANSI A250.8.

B. Fire Rated Frame Construction: Conform to UL 10B.

C. Installed Frame Assembly: Conform to NFPA 80 for fire rated class same as fire door.

D. Maintain one copy of each document on site.

1.5 QUALIFICATIONS

A. Manufacturer: Company specializing in manufacturing products specified in this section with minimum three years documented experience.

1.6 DELIVERY, STORAGE, AND HANDLING

A. Section 01600 - Product Requirements: Product storage and handling requirements.

B. Accept frames on site in Manufacturer's packaging. Inspect for damage.

C. Break seal on-site to permit ventilation.

1.7 COORDINATION

A. Section 01300 - Administrative Requirements: Coordination and project conditions.

B. Coordinate Work with frame opening construction, door, and hardware installation.

C. Sequence installation to accommodate required door hardware electric wire connections.

PART 2 - PRODUCTS

2.1 STANDARD STEEL FRAMES

A. Manufacturers:
1. Ceco Door Products Model
2. Republic Builders Products Model
3. Steelcraft Model
4. Substitutions: Section 01600 - Product Requirements.

B. Product Description: Standard shop fabricated steel frames, fire rated and non-rated types. To suit ANSI A250.8 Grade and Model of door specified

1. Exterior Frames:
   a. Level 2 for Door Models; Fully Welded, nominal 14 gage thick material, base metal thickness
   b. Kerfed frame with integral weather stripping
2. Interior Frames:
   a. Level 2 for Door Models; Fully Welded, nominal 14 gage inch thick material, base metal thickness.

2.2 ACCESSORIES

A. Bituminous Coating: Non-asbestos fibered asphalt emulsion.

B. Primer: ANSI A250.10 rust inhibitive type.

C. Silencers: Specified in Section 08710. Resilient rubber set in fitted into drilled hole.

D. Weather stripping: Specified in Section 08710. Resilient rubber set in steel retainer.

2.3 FABRICATION

A. Fabricate frames as fully welded unit.
1. Fabricate frames with mitered or coped and welded face corners and seamless face joints.

B. Fabricate frames with hardware reinforcement plates welded in place. Provide mortar guard boxes.

C. Reinforce frames wider than 48 inches with roll formed steel channels fitted tightly into frame head, flush with top.

D. Prepare frames for silencers. Provide three single silencers for single doors on strike side. Provide two single silencers on frame head at double doors without mullions.

E. Configure exterior frames with special profile to receive recessed weather stripping.

F. Attach fire rated label to each fire rated frame.

G. Fabricate frames to suit masonry wall coursing with 2 inch head member.

2.4 SHOP FINISHING

A. Steel Sheet: Galvanized to ASTM A653/A653M G60.

B. Primer: Baked.

C. Coat inside of frame profile with bituminous coating to minimum thickness of 1/16 inch.

PART 3 - EXECUTION

3.1 EXAMINATION

A. Section 01300 - Administrative Requirements: Coordination and project conditions.

B. Verify opening sizes and tolerances are acceptable.

3.2 INSTALLATION

A. Install frames in accordance with ANSI A250.8.

B. Coordinate with masonry and gypsum board wall construction for anchor placement.

C. Coordinate installation of glass and glazing specified in Section 08800.

D. Coordinate installation of frames with installation of hardware specified in Section 08710 and doors in Section 08110.

E. Install roll formed steel reinforcement channels between two abutting frames. Anchor to structure and floor.

3.3 ERECTION TOLERANCES

A. Section 01400 - Quality Requirements: Tolerances.

B. Maximum Diagonal Distortion: 1/16 measured with straight edges, crossed corner to corner.

3.4 SCHEDULE

A. Refer to Door and Frame Schedule on drawings.

END OF SECTION

SECTION 08212

FLUSH WOOD DOORS

PART 1 - GENERAL

1.1 SUMMARY

A. Section includes flush wood doors flush and flush glazed configuration; fire rated and non-rated.

B. Related Sections:

1. Section 06200 - Finish Carpentry: Wood door frames
2. Section 08115 - Standard Steel Frames
3. Section 08710 - Door Hardware
4. Section 08800 - Glazing
5. Section 09900 - Painting and Coatings: Site finishing of wood doors.

1.2 REFERENCES

A. American National Standards Institute:
1. ANSI A135.4 - Basic Hardboard.

B. ASTM International:
1. ASTM E413 - Standard Classification for Rating Sound Insulation.

C. Architectural Woodwork Institute:
1. AWI - Quality Standards Illustrated.

D. Hardwood Plywood and Veneer Association:
1. HPVA HP-1 - American National Standard for Hardwood and Decorative Plywood.

E. National Fire Protection Association:
1. NFPA 80 - Standard for Fire Doors, Fire Windows
2. NFPA 252 - Standard Methods of Fire Tests of Door Assemblies.

F. Underwriters Laboratories Inc.:
1. UL 10B - Fire Tests of Door Assemblies
2. UL - Building Materials Directory.

G. Uniform Building Code:
1. UBC Standard 7-2 - Fire Tests of Door Assemblies.

H. Intertek Testing Services (Warnock Hersey Listed):
1. WH - Certification Listings.

1.3 SUBMITTALS

A. Section 01330 - Submittal Procedures: Submittal procedures.

B. Shop Drawings: Illustrate door opening criteria, elevations, sizes, types, swings, undercuts required, special blocking for hardware, identify cutouts for glazing.
1. Indicate dimensions and locations of mortises and holes for hardware.
2. Indicate dimensions and locations of cutouts.
3. Indicate requirements for veneer matching.
4. Indicate doors to be factory finished and finish requirements.
5. Indicate fire ratings for fire doors.

C. Product Data: Submit information on door core materials and construction, and on veneer species, type and characteristics.

D. Samples:
1. Submit two samples of door construction, 8 x 10 inch in size cut from bottom corner of door.
2. Submit two samples of door veneer, 8 x 10 inch in size illustrating wood grain, stain color, and sheen.

E. Manufacturer's Installation Instructions: Submit special installation instructions.

1.4 QUALITY ASSURANCE

A. Perform Work in accordance with AWI Quality Standard Section 1300, Custom Grade.

B. Finish doors in accordance with AWI Quality Standard Section 1500.

C. Fire Door Construction: Conform to NFPA 252 and UL 10B.

D. Installed Fire Rated Door Assembly: Conform to NFPA 80 for fire rated class as scheduled.

E. Maintain one copy of each document on site.

1.5 QUALIFICATIONS

A. Manufacturer: Company specializing in manufacturing products specified in this section with minimum three years documented experience.

B. Installer: Company specializing in performing work of this section with minimum three years documented experience and approved by Manufacturer.

1.6 DELIVERY, STORAGE, AND HANDLING

A. Section 01600 - Product Requirements: Product storage and handling requirements.

B. Package, deliver and store doors in accordance with AWI Section 1300.

C. Protect doors with resilient packaging sealed with heat shrunk plastic. Do not store in damp or wet areas; or in areas where sunlight might bleach veneer. Seal top and bottom edges with tinted sealer when stored more than one week.
   1. Break seal on site to permit ventilation.

1.7 COORDINATION

A. Section 01300 - Administrative Requirements: Coordination and project conditions.

B. Coordinate Work with door opening construction, door frame and door hardware installation.

1.8 WARRANTY

A. Section 01700 - Execution Requirements: Product warranties and product bonds.

B. Include coverage for delamination of veneer, warping beyond specified installation tolerances, defective materials, and telegraphing core construction.

C. Furnish Manufacturer's "Life of Installation" warranty for interior doors.

D. Manufacturer's Warranty: Provide for replacing including cost of re-hanging and refinishing at no cost to Owner, wood doors exhibiting defects in materials or workmanship including warp and de-lamination for life of original installation.

PART 2 - PRODUCTS

2.1 FLUSH WOOD DOORS

A. Manufacturers:
   1. Algoma Hardwoods Inc. Model Flush Wood Door
   2. Eggers Industries Model 5-Ply Flush Doors
   3. Buell Door Company Model Hardwood Veneer Doors
   4. Industrial Mohawk Flush Doors, Inc. Mode 5-Ply
   5. Substitutions: Section 01600 - Product Requirements.

B. Product Description: Solid core flush wood doors; red oak, wood veneer facing material; fire rated and non-rated types; flush glazed design; site finished; wood doors.
   1. Flush Interior Doors: 1-3/4 inches thick; solid core, five-ply construction, fire rated as indicated on Drawings; stain grade.

2.2 COMPONENTS

A. Solid Core, Non-Rated: AWI Section 1300, Type SCL Structural Composite Lumber.

B. Solid Core, Fire Rated: AWI Section 1300, Type FD 1/3.

C. Blocking: Provide wood blocking in doors as follows:

1. 5-inch top-rail blocking, in doors indicated to have closers.
2. 5-inch bottom-rail blocking, in doors indicated to have kick, mop, or armor plates.
3. 5-inch midrail blocking, in doors indicated to have exit devices.

D. Interior Veneer Facing: AWI Custom quality wood, plain sliced, with balanced match end matched grain, for transparent finish.
   1. Wood: Red Oak As indicated in Schedule.

E. Cross Banding Behind Laminate Finish: 2-ply; Manufacturer's standard construction.

F. Facing Adhesive: Type I – waterproof or II - water resistant, Manufacturers' standard construction; formaldehyde free.

2.3 ACCESSORIES

A. Glazing Stops: Wood, of same species as door facing with Wood with metal clips for rated doors. Aluminum channel shape, mitered corners; prepared for countersink style screws.

2.4 FABRICATION

A. Fabricate non-rated doors in accordance with AWI Quality Standards requirements.

B. Fabricate fire rated doors in accordance with AWI Quality Standards and to UL requirements. Attach fire rating label to door.

C. Furnish lock blocks at lock edge and top of door for closer for hardware reinforcement.

D. Vertical Exposed Edge of Stiles: Of same species as veneer facing. Hardwood for transparent finish

E. Fit door edge trim to edge of stiles after applying veneer facing.

F. Bond edge banding to cores.

G. Factory machine doors for finish hardware in accordance with hardware requirements and dimensions. Do not machine for surface hardware. Furnish solid blocking for through bolted hardware.

H. Factory fit doors for frame opening dimensions identified on shop drawings.

I. Provide edge clearances in accordance with AWI 1300.

PART 3 - EXECUTION

3.1 EXAMINATION

A. Section 01300 - Administrative Requirements: Coordination and project conditions.

B. Verify opening sizes and tolerances are acceptable.

C. Do not install doors in frame openings that are not plumb or are out-of-tolerance for size or alignment.

3.2 INSTALLATION

A. Install fire rated and non-rated doors in accordance with AWI Quality Standard, NFPA 80, and to requirements for fire rating label by UL.

B. Trim non-rated door width by cutting equally on both jamb edges.

C. Trim door height by cutting bottom edges to maximum of 3/4 inch.
1. Trim fire door height at bottom edge only, in accordance with fire rating requirements.

D. Machine cut doors for hardware installation.

E. Coordinate installation of doors with installation of frames specified in Section 08115 and hardware specified in Section 08710.

F. Install door louvers plumb and level.

G. Coordinate installation of glass and glazing specified in Section 08800.

H. Site finish doors in accordance with Section 09900.

3.3 INSTALLATION TOLERANCES

A. Section 01400 - Quality Requirements: Tolerances.

B. Conform to AWI requirements for fit and clearance tolerances.

C. Conform to AWI Section 1300 requirements for maximum diagonal distortion.

3.4 ADJUSTING

A. Section 01700 - Execution Requirements: Testing, adjusting, and balancing.

B. Adjust door for smooth and balanced door movement.

C. Adjust closer for full closure.

3.5 SCHEDULE

A. Reference floor plans, elevations and sections for door locations and door and frame schedule and door types for door sizes, construction and features.

END OF SECTION

SECTION 08310

ACCESS DOORS AND PANELS

PART 1 - GENERAL

1.1 SUMMARY

A. Section includes fire resistive rated and non-rated access doors and panels with frames.
   1. Provide for access to controls, valves, traps, dampers, cleanouts, and similar items requiring operation behind inaccessible finished surfaces.
   2. Coordinate exact locations with various trades to assure proper placement of access doors and panels.
   3. Located at each above ceiling mechanical unit at filter location.

B. Related Sections:
   1. Section 09900 - Paints and Coatings: Field paint finish
   2. Section 15820 - Duct Accessories: Access doors in ductwork.

1.2 REFERENCES

A. National Fire Protection Association:
   1. NFPA 80 - Standard for Fire Doors, Fire Windows.

B. Underwriters Laboratories Inc.:
   1. UL - Building Materials Directory.

C. Intertek Testing Services (Warnock Hersey Listed):
   1. WH - Certification Listings.

1.3 SUBMITTALS

A. Section 01330 - Submittal Procedures: Submittal procedures.

B. Shop Drawings: Indicate exact position of access door units.

C. Product Data: Submit literature indicating sizes, types, finishes, hardware, scheduled locations, fire resistance listings, and details of adjoining Work.

D. Samples: Submit one illustrating frame configuration and anchors.

E. Manufacturer's Installation Instructions: Submit installation requirements and rough-in dimensions.

1.4 CLOSEOUT SUBMITTALS

A. Section 01700 - Execution Requirements: Closeout procedures.

B. Project Record Documents: Record actual locations of access units.

1.5 QUALITY ASSURANCE

A. Fire Resistance Ratings: Where indicated as fire rated, provide assemblies from Manufacturers listed in UL Directory or Intertek Testing Services (Warnock Hersey Listed) Directory.

1.6 QUALIFICATIONS

A. Manufacturer: Company specializing in manufacturing products specified with minimum three years documented experience.

1.7 COORDINATION

A. Coordinate Work under provisions of Section 01311 - Project Coordination.

B. Coordinate Work with work requiring controls, valves, traps, dampers, cleanouts, and similar items requiring operation being located behind finished surfaces.

PART 2 - PRODUCTS

2.1 ACCESS DOORS AND PANELS

A. Manufacturers:
1. J. L. Industries
2. Larsen's Manufacturing Company
3. Milcor LTD, Partnership.
4. Substitutions: Section 01600 - Product Requirements.

B. Flush Framed Access Doors: Frames and nominal 1 inch wide exposed flanges of 16 gage steel and door panels of 14 gage steel.

C. Gypsum Board Access Doors: Frames and nominal 1 inch wide flanges of 16 gage steel and door panels of 14 gage steel. Design flanges to be concealed by gypsum board joint finishing compound specified in Section 09260.

D. Fire Rated Access Doors: Frames and nominal 1 inch wide exposed flanges of minimum 16 gage steel and door panels of 20 gage steel. Provide self closing and latching doors with keyed lock to match cylinders specified in Section 08710. Attach label to fire rated doors for rating indicated.

E. Acoustical Tile Ceilings: Fabricated for use in acoustical tile ceilings. The steel door is recessed 5/8” to receive acoustical tile.

2.2 FABRICATION

A. Fabricate units of continuous welded construction; weld, fill, and grind joints to assure flush and square unit.

B. Wall and Ceiling Access Door and Panel Hardware:
1. Hinge: Standard continuous, 175 degree steel hinges
2. Lock: Self-latching lock. Screw driver slot for quarter turn cam lock.

C. Size Variations: Obtain acceptance of Manufacturer’s standard size units which vary slightly from sizes shown or scheduled.

2.3 SHOP FINISHING

A. Base Metal Protection: Galvanized, hot dipped finish. Prime coat units with baked on primer.

B. Finish: Two coats baked enamel, color as selected.

PART 3 - EXECUTION

3.1 EXAMINATION

A. Section 01300 - Administrative Requirements: Coordination and project conditions.

B. Verify rough openings for access doors and panels are correctly sized and located.

3.2 INSTALLATION

A. Comply with Manufacturer's written instructions for installing access doors and frames.

B. Secure frames rigidly in place, plumb and level in opening, with plane of door and panel face aligned with adjacent finished surfaces.
1. Set concealed frame type units flush with adjacent finished surfaces.

C. Position unit to provide convenient access to concealed work requiring access.

D. Install fire rated units in accordance with NFPA 80 and requirements for fire listing.

3.3 ADJUSTING AND CLEANING

A. Adjust doors and hardware after installation for proper operation.

B. Remove and replace doors and frames that are warped, bowed, or otherwise damaged.

END OF SECTION

SECTION 08333

OVERHEAD COILING DOORS

PART 1 - GENERAL

1.1 SUMMARY

A. Section includes overhead coiling door, operating hardware, manual operation.

B. Related Sections:
1. Section 05500 - Metal Fabrications: Support framing
2. Section 08710 - Door Hardware: Product Requirements for cylinder core and keys for placement by this section
3. Section 09900 - Paints and Coatings: Field paint finish.

1.2 REFERENCES

A. ASTM International:
1. ASTM A653/A653M - Standard Specification for Steel Sheet, Zinc-Coated (Galvanized) or Zinc-Iron Alloy-Coated (Galvannealed) by the Hot-Dip Process
2. ASTM A924/A924M - Standard Specification for General Requirements for Steel Sheet, Metallic-Coated by the Hot-Dip Process
3. ASTM B221 - Standard Specification for Aluminum and Aluminum-Alloy Extruded Bars, Rods, Wire, Profiles, and Tubes.

B. National Fire Protection Association:
1. NFPA 80 - Standard for Fire Doors, Fire Windows.

C. Underwriters Laboratories Inc.:
1. UL 325 - Door, Drapery, Gate, Louver, and Window Operators and Systems.
2. UL - Building Materials Directory.

D. Intertek Testing Services (Warnock Hersey Listed):
1. WH - Certification Listings.

1.3 SYSTEM DESCRIPTION

A. Manual Operation: Manual hand chain lift unit with overhead counter balance device, requiring 25 lb nominal force to operate.

1.4 DESIGN REQUIREMENTS

A. Wind Loads: Design door assembly to withstand wind/suction load of 20 psf, with maximum deflection of 1/120, and without damage to door or assembly components.
1. Design per local code requirements for wind loads.

B. Impact Test for Flying Debris: Comply with ASTM E 1996, tested according to ASTM E 1886.
   1. Level of Protection: Enhanced Protection.
   2. Wind Zone One: 120 mph, pressure test to 3/4 and 1-1/2 x design pressure (positive and negative).

C. Operation: Design door assembly, including operator, to operate for not less than 20,000 cycles.

1.5 SUBMITTALS

A. Section 01330 - Submittal Procedures: Submittal procedures.

B. Shop Drawings: Indicate pertinent dimensioning, anchorage methods, hardware locations, and installation details.
   1. Summary of forces and loads on walls and jambs.

C. Product Data: Submit general construction, component connections and details.

D. Samples: Submit two door slats, 12 x 12 inch in size illustrating shape, color and finish texture.

E. Manufacturer's Installation Instructions: Indicate installation sequence and procedures, and adjustment and alignment procedures.

F. Qualification Data: For Installer.

1.6 CLOSEOUT SUBMITTALS

A. Section 01700 - Execution Requirements: Closeout procedures.

B. Operation and Maintenance Data: Submit lubrication requirements and frequency, and periodic adjustments required.

1.7 QUALITY ASSURANCE

A. Manufacturer: Rolling doors shall be manufactured by a firm with a minimum of five years experience in the fabrication and installation of rolling doors.

B. Installer: Company specializing in performing Work of this section with minimum five years documented experience, trained and approved by manufacturer.

C. Single Source Responsibility: Provide doors, guides, motors, and relate primary components form one manufacturer for each type of door.

D. Pre-Installation Conference: Schedule and convene a pre-installation conference prior to commencement of installation. Establish procedures to maintain optimum working conditions and to coordinate this work with related and adjacent work.

1.8 DELIVERY, STORAGE, AND HANDLING

A. Section 01600 - Product Requirements: Product storage and handling requirements.

1.9 WARRANTY

A. Manufacturers' Standard warranty.

PART 2 - PRODUCTS

2.1 OVERHEAD COILING DOORS

A. Manufacturers:
1. Alpine Overhead Doors, Inc., Model Redi-Storm IMB
2. Cookson Co. Model Type JCWI
3. Cornell Iron Works, Inc. Model ESD20
4. Overhead Door Corporation, Model StormTite 625 Series
5. Raynor Garage Door Model DuraCoil Standard
6. Winsor Door Model SFWI
7. Substitutions: Section 01600 - Product Requirements.

B. Product Description:
1. Manual Operation: Manual hand chain lift unit with overhead counter balance device, requiring 25 lb nominal force to operate.

2.2 COMPONENTS

A. Curtain: Conform to following; scheduled indicated on Drawings:

1. Steel Slats: Interlocking, minimum 20 gage of ASTM A653/A653M steel, minimum galvanized coating designation G90 in accordance with ASTM A924/A924M;.
   a. Type: Flat profile type slat
   b. Sandwich slat construction with manufacturer's CFC-Free foamed-in-place, polyurethane insulation core.
2. Nominal Slat Size: 3 inches wide by required length.
3. Slat Ends: Each slat fitted with end locks to act as wearing surface in guides and to prevent lateral movement.
4. Curtain Bottom: Fitted with galvanized steel angles, channels, or tubes to provide reinforcement and positive contact with floor in closed position.
   a. Astragal: Provide a replaceable, adjustable, continuous, compressible gasket of flexible vinyl, rubber, or neoprene
   b. Locking mechanism.

B. Guides: Minimum 3/16 inch; galvanized steel conforming to ASTM A653/A653M, minimum galvanized coating designation G90 in accordance with ASTM A924/A924M.
1. Furnish continuous angles of profile to retain door in place; mounting brackets of same metal.

C. Roller Shaft Counterbalance: Steel pipe and helical steel spring system, capable of producing torque sufficient to ensure smooth operation of curtain from any position and capable of holding position at mid-travel; with adjustable spring tension.
   1. Standard 100,000 cycle life design
   2. Barrel or pipe; The barrel shall be designed to limit the maximum deflection to .03" per foot of opening width
   3. The springs shall be adjusted by means of an exterior wheel.

D. Hood Enclosure: Round shape, minimum 22 gage galvanized steel; internally reinforced to maintain rigidity and shape. The hood shall contain a waterproof baffle to control air infiltration.

E. Brackets: Manufacturer's standard design, either cast-iron or cold-rolled steel plate bolted to guides for mounting curtain and barrel assembly

F. Hardware:
   1. Locks: Furnish locks to allow doors to be secured.
      a. Manual Doors: Manufacturer's standard cylinder dead lock on inside at door jamb, key operated from exterior and interior.
   2. Cylinders: Minimum six pin cylinders, Furnished under Section 08710 - Door Hardware, installed as part of Work of this section; doors keyed alike.
   3. Handle: Inside side mounted, adjustable keeper, spring activated latch bar with feature to keep in locked or retracted position; interior handle. Hardware: Manufacturer's standard push/pull handles for push-up-operated or emergency operated doors and locking device.

G. Weatherstripping (Exterior Assemblies): Moisture and rot proof, resilient type for complete weathertight installation.
   1. Weatherseals: Replaceable, adjustable, continuous, compressible weather-stripping gaskets fitted to bottom, jambs, and top, and continuous sheet in hood of exterior doors.

H. Thermoset Finish for Steel and Galvanized Steel: Apply Manufacturer's standard baked finish consisting of primer and thermosetting topcoat according to coating Manufacturer's written instructions for cleaning, pretreatment, application, thermosetting, and minimum dry film thickness.
   1. Color to be selected from Manufacturers' standard colors, or color matched to Architect selected color.

I. Chain-Hoist Operator: Provide manual chain-hoist operator consisting of endless steel hand chain, chain pocket wheel and guard, and gear-reduction unit with a maximum 25-lbf effort for door operation. Provide alloy steel hand chain with chain holder secured to operator guide

J. Locking Mechanisms: The chain shall be secured

K. Vision Lites: (3" x 5/8") uniformly spaced opening with double Plexiglas® covers.

2.3 SHOP FINISHING

A. Finish: Comply with NAAMM's "Metal Finishes Manual for Architectural and Metal Products" for recommendations for applying and designating finishes.
   1. Surface Preparation: Clean galvanized surfaces with nonpetroleum solvent so surfaces are free of oil and other contaminants.
      a. Pretreat zinc-coated steel, after cleaning, with a conversion coating of type suited to organic coating applied over it.
   2. Apply Manufacturer's standard primer and powder-coat finish to interior- and exterior-door faces and Steel Guides Hood Enclosure after forming, according to coating Manufacturer's written instructions for application, thermosetting, and minimum dry film thickness.
      a. Color and Gloss: As selected by Architect from Manufacturer's full range.

PART 3 - EXECUTION

3.1 EXAMINATION

A. Section 01300 - Administrative Requirements: Coordination and project conditions.

B. Verify opening sizes, tolerances and conditions are acceptable. Take field dimensions and examine conditions of substrates, supports, and other conditions under which this work is to be performed. Do not proceed with work until unsatisfactory conditions are corrected.

3.2 INSTALLATION

A. Installation: Install door and operating equipment complete with necessary hardware, jamb and head mold strips, anchors, inserts, hangers, and equipment supports according to Shop Drawings and Manufacturer's written instructions. Coordinate installation with adjacent work to ensure proper clearances and allow for maintenance.

B. Use anchorage devices to securely fasten assembly to wall construction and building framing without distortion or stress.

C. Securely and rigidly brace components suspended from structure. Secure guides to structural members only.

D. Fit and align assembly including hardware; level and plumb, to provide smooth operation.

E. Coordinate installation of sealants and backing materials at frame perimeter as specified in Section 07900.

F. Install perimeter trim and closures.

G. Instruct Owner’s personnel in proper operating procedures and maintenance schedule.

3.3 ERECTION TOLERANCES

A. Section 01400 - Quality Requirements: Tolerances.

B. Maintain dimensional tolerances and alignment with adjacent Work.

C. Maximum Variation From Plumb: 1/16 inch.

D. Maximum Variation From Level: 1/16 inch.

E. Longitudinal or Diagonal Warp: Plus or minus 1/8 inch per 10 ft straight edge.

3.4 ADJUSTING

A. Section 01700 - Execution Requirements: Testing, adjusting, and balancing.

B. Adjust door, hardware and operating assemblies for smooth and noiseless operation.

3.5 CLEANING

A. Section 01700 - Execution Requirements: Final cleaning.

B. Clean door and components.

C. Remove labels and visible markings. Touch-up damaged coatings and finishes and repair minor damage. Clean exposed surfaces using non-abrasive materials and methods recommended by Manufacturer of material or product being cleaned.

END OF SECTION

SECTION 08410

ALUMINUM STOREFRONTS

PART 1 - GENERAL

1.1 SUMMARY

A. Section includes aluminum-framed storefronts including aluminum frames, glass doors including hardware, and glass.

B. Related Sections:
1. Section 07900 - Joint Sealers: System perimeter sealant and back-up materials
2. Section 08800 - Glazing.

1.2 REFERENCES

A. Aluminum Association:
1. AA DAF-45 - Designation System for Aluminum Finishes.

B. American Architectural Manufacturers Association:
1. AAMA 501 - Methods of Test for Exterior Walls
2. AAMA 611 - Voluntary Specification for Anodized Architectural Aluminum
3. AAMA 1503 - Voluntary Test Method for Thermal Transmittance and Condensation Resistance of Windows, Doors and Glazed Wall Sections
4. AAMA 2605 - Voluntary Specification, Performance Requirements and Test Procedures for Superior Performing Organic Coatings on Aluminum Extrusions and Panels
5. AAMA CW-10 - Care and Handling of Architectural Aluminum from Shop to Site
6. AAMA SFM-1 - Aluminum Store Front and Entrance Manual.

C. American Society of Civil Engineers:
1. ASCE 7 - Minimum Design Loads for Buildings and Other Structures.

D. ASTM International:
1. ASTM A36/A36M - Standard Specification for Carbon Structural Steel
2. ASTM A123/A123M - Standard Specification for Zinc (Hot-Dip Galvanized) Coatings on Iron and Steel Products
3. ASTM A653/A653M - Standard Specification for Steel Sheet, Zinc-Coated (Galvanized) or Zinc-Iron Alloy-Coated (Galvannealed) by the Hot-Dip Process
4. ASTM B209 - Standard Specification for Aluminum and Aluminum-Alloy Sheet and Plate
5. ASTM B221 - Standard Specification for Aluminum and Aluminum-Alloy Extruded Bars, Rods, Wire, Profiles, and Tubes
6. ASTM E283 - Standard Test Method for Determining the Rate of Air Leakage Through Exterior Windows, Curtain Walls, and Doors Under Specified Pressure Differences Across the Specimen

7. ASTM E330 - Standard Test Method for Structural Performance of Exterior Windows, Curtain Walls, and Doors By Uniform Static Air Pressure Difference
8. ASTM E331 - Standard Test Method for Water Penetration of Exterior Windows, Curtain Walls, and Doors By Uniform Static Air Pressure Difference
9. ASTM E547 - Standard Test Method for Water Penetration of Exterior Windows, Curtain Walls, and Doors by Cyclic Static Air Pressure Differential.

E. National Fenestration Rating Council Incorporated:
1. NFRC 100 - Procedures for Determining Fenestration Product U-Factors.

F. SSPC: The Society for Protective Coatings:
1. SSPC Paint 20 - Zinc-Rich Primers (Type I - Inorganic and Type II - Organic)
2. SSPC Paint 25 - Red Iron Oxide, Zinc Oxide, Raw Linseed Oil, and Alkyd Primer.

1.3 SYSTEM DESCRIPTION

A. Aluminum-framed storefront system includes tubular aluminum sections with supplementary internal support framing, aluminum and glass entrances, shop fabricated, factory finished, glass and glazing, related flashings, anchorage and attachment devices.

B. System Assembly: Site assembled.

1.4 PERFORMANCE REQUIREMENTS

A. System Design: Design and size components to withstand dead and live loads caused by positive and negative wind pressure acting normal to plane of wall, including building corners.
1. As calculated in accordance with applicable code, as measured in accordance with ASTM E330.

B. Deflection: Limit mullion deflection to 1/175 for spans under 13’-6” and 1/240 plus 1/4 inch for spans over 13’-6”, flexure limit of glass; with full recovery of glazing materials.

C. System Assembly: Accommodate without damage to components or deterioration of seals, movement within system, movement between system and peripheral construction, dynamic loading and release of loads, deflection of structural support framing.

D. Air Infiltration: Limit air leakage through assembly to 0.06 cfm/min/sq ft of wall area, measured at reference differential pressure across assembly of 6.24 psf as measured in accordance with ASTM E283.

E. Air and Vapor Seal: Maintain continuous air barrier and vapor retarder throughout assembly, primarily in line with inside pane of glass and heel bead of glazing compound.

F. Water Resistance Test: Test unit in accordance with ASTM E 331.

G. Vapor Seal: Limit vapor seal with interior atmospheric pressure of 1 inch sp, 72 degrees F , 40 Percent RH without seal failure.

H. Thermal Transmittance of Assembly (Excluding Entrances): Maximum U Value of 0.69 Btu/sq ft per hour per deg F when measured in accordance with [AAMA 1503] [NFRC 100].

I. Expansion / Contraction: Provide for expansion and contraction within system components caused by cycling temperature range of 170 degrees F over 12 hour period without causing detrimental effect to system components and anchorage.

J. System Internal Drainage: Drain water entering joints, condensation occurring in glazing channels, or migrating moisture occurring within system, to exterior by weep drainage network.

1.5 SUBMITTALS

A. Section 01330 - Submittal Procedures: Submittal procedures.

B. Shop Drawings: Indicate system dimensions, framed opening requirements and tolerances, affected related Work and expansion and contraction joint location and details.
   1. For entrances, include hardware schedule and indicate operating hardware types, functions, quantities, and locations.

C. Product Data: Submit component dimensions, describe components within assembly, anchorage and fasteners, glass, door hardware, and internal drainage details.

D. Samples: Submit two samples 12 x 12 inches in size illustrating finished aluminum surface, glass units, and glazing materials.

E. Design Data: Indicate framing member structural and physical characteristics, calculations, dimensional limitations.

F. Manufacturer's Certificate: Certify products meet or exceed specified requirements.

G. Qualification Data: For Installer.

1.6 QUALITY ASSURANCE

A. Perform Work in accordance with AAMA SFM-1 and AAMA MCWM-1 - Metal Curtain Wall, Window, Store Front and Entrance - Guide Specifications Manual.

B. Field Measurements: Verify actual locations of structural supports for aluminum-framed systems by field measurements before fabrication and indicate measurements on Shop Drawings.
   1. Established Dimensions: Where field measurements cannot be made without delaying the Work, establish dimensions and proceed with fabricating aluminum-

framed systems without field measurements. Coordinate construction to ensure that actual dimensions correspond to established dimensions.

C. Maintain one copy copies of each document on site.

1.7 QUALIFICATIONS

A. Manufacturer and Installer: Company specializing in manufacturing aluminum glazing systems with minimum three years documented experience, and with service facilities within 100 miles of Project.

B. Design structural support framing components under direct supervision of Professional Engineer experienced in design of this Work and licensed in State of Texas.

1.8 PRE-INSTALLATION MEETINGS

A. Section 01300 - Administrative Requirements: Pre-installation meeting.

B. Convene minimum two weeks prior to commencing work of this section.

1.9 DELIVERY, STORAGE, AND PROTECTION

A. Section 01600 - Product Requirements: Product storage and handling requirements.

B. Deliver material in Manufacturer's packaging complete with installation instructions.

C. Handle, store and protect pre-finished aluminum components under provisions of Section 01620 and as recommended by Manufacturer.

D. Handle Products of this section in accordance with AAMA MCWM-1 - Curtain Wall Manual #10.

E. Protect finished aluminum surfaces with wrapping. Do not use adhesive papers or sprayed coatings which bond when exposed to sunlight or weather.

1.10 ENVIRONMENTAL REQUIREMENTS

A. Section 01600 - Product Requirements.

B. Do not install sealants or glazing materials when ambient temperature is less than 40 degrees F during and 48 hours after installation.

1.11 COORDINATION

A. Section 01300 - Administrative Requirements: Coordination and project conditions.

B. Coordinate the Work with installation of stud framing work, masonry, glazing and sealant components or materials.

1.12 WARRANTY

A. Section 01700 - Execution Requirements: Product warranties and product bonds.

B. Special Finish Warranty: Manufacturer's standard form in which Manufacturer agrees to repair or replace components on which finishes fail within specified warranty period. Warranty does not include normal weathering.
1. Warranty Period: 10 years from date of Substantial Completion

C. Furnish five year Manufacturer warranty for glazed units.

PART 2 - PRODUCTS

2.1 ALUMINUM-FRAMED STOREFRONTS

A. Manufacturers:
1. EFCO Corp. Model System 402
2. Kawneer Co., Inc. Model Trifab 450 – 2" sightline
3. Traco Model TR-7850N
4. Vistawall Architectural Products Model Series 3000 – 2" x 4 ½" mullion profile
5. Substitutions: Section 01600 - Product Requirements.

B. Product Description:
1. Aluminum Frame: Non-thermally broken; flush glazing stops; drainage holes; internal weep drainage system.
a. Depth of frame shall not be less than 4 ½"
b. Face dimension shall not be less than 2"
c. Frame components shall be shear block construction.
2. Glazing: Units shall be dry glazed with EPDM gasket on both exterior and interior.
3. Mullions: Profile of extruded aluminum with internal reinforcement of aluminum or shaped steel structural section.
4. Doors: Aluminum framed glass doors; 1-3/4 inches thick, nominal 3 inch wide top rail and vertical stiles, nominal 4 inch wide bottom rail; beveled glazing stops.

2.2 COMPONENTS

A. Extruded Aluminum: ASTM B221; 6063 alloy, T5 temper typical, or T6 temper for extruded structural members.

B. Steel Sections: ASTM A36/A36M; shaped to suit mullion sections, galvanized to G90.

C. Glass: Specified in Section 08800.

D. Glazing Materials: Storefront Manufacturer's standard types to suit application and to achieve weather, moisture, and air infiltration requirements.

E. Hardware: Furnish Manufacturer's standard door hardware for types of doors and applications indicated, and as specified below.
   1. Weather Stripping, Sill Sweep Strips, Pull, Panic Bar, Closer, Deadlock, Weather-Stripping, and Hinges: Manufacturers standard type to suit application.

F. Flashings: Minimum 0.032 inch thick aluminum to match mullion sections where exposed.

G. Firestopping: Specified in Section 07840.

H. Vapor Retarder: Sheet EPDM.

I. Air Barrier: Sheet steel, galvanized.

J. Sealant and Backing Materials:
   1. Sealant Used Within System (Not Used for Glazing): Manufacturer's standard materials to achieve weather, moisture, and air infiltration requirements.
   2. Perimeter Sealant: Specified in Section 07900.

K. Fasteners: Stainless steel, type recommended by Manufacturer to suit application. Exposed fasteners will not be acceptable.

2.3 FABRICATION

A. Fabricate components with minimum clearances and shim spacing around perimeter of assembly, yet enabling installation and dynamic movement of perimeter seal.

B. Accurately fit and secure joints and corners. Make joints flush, hairline, and weatherproof.

C. Prepare components to receive anchor devices. Fabricate anchors.

D. Arrange fasteners and attachments to conceal from view.

E. Prepare components with internal reinforcement for door hardware.

F. Reinforce framing members for imposed loads.

2.4 SHOP FINISHING

A. Clear Anodized Aluminum Surfaces: AAMA 611, AA-M12C22A41 non-specular as fabricated mechanical finish, medium matte chemical finish, and Architectural Class I 0.7 mils clear anodized coating.

B. Concealed Steel Items: Galvanized in accordance with ASTM A123/A123M to thickness Grade 85, 2.0 oz/sq ft.

C. Apply bituminous paint to concealed aluminum and steel surfaces in contact with cementitious or dissimilar metals.

D. Touch-Up Primer for Galvanized Steel Surfaces: SSPC Paint 20 zinc rich.

E. Extent of Finish:
1. Apply factory coating to surfaces exposed at completed assemblies.
2. Apply finish to surfaces cut during fabrication so no natural aluminum is visible in completed assemblies, including joint edges.
3. Apply touch-up materials recommended by coating Manufacturer for field application to cut ends and minor damage to factory applied finish.

PART 3 - EXECUTION

3.1 EXAMINATION

A. Section 01300 - Administrative Requirements: Coordination and project conditions.

B. Verify dimensions, tolerances, and method of attachment with other Work.

C. Verify wall openings and adjoining air and vapor seal materials are ready to receive Work of this Section.

3.2 INSTALLATION

A. Install wall system in accordance with AAMA MCWM-1 - Store Front and Entrance - Guide Specifications Manual.

B. Install wall system in accordance with Manufacturer's recommendations. Ensure assemblies are plumb, level and free of warp or twist. Maintain dimensional tolerances and alignment with adjacent work.

C. Attach to structure to permit sufficient adjustment to accommodate construction tolerances and other irregularities.

D. Provide alignment attachments, anchorage and shims to permanently fasten system to building structure.

E. Align assembly plumb and level, free of warp or twist. Maintain assembly dimensional tolerances, aligning with adjacent Work.

F. Provide thermal isolation where components penetrate or disrupt building insulation.

G. Install sill flashings. Turn up ends and edges; seal to adjacent Work to form water tight dam.

H. Coordinate attachment and seal of perimeter air and vapor barrier materials.

I. Pack fibrous insulation in shim spaces at perimeter of assembly to maintain continuity of thermal barrier.

J. Install integral flashings and integral joint sealers.

K. Set thresholds in full bed of adhesive and secure.

L. Install hardware using templates provided. Refer to Section 08710 for installation requirements.

M. Coordinate installation of glass with Section 08800; separate glass from metal surfaces.

N. Coordinate installation of perimeter sealants with Section 07900.

3.3 ERECTION TOLERANCES

A. Section 01400 - Quality Requirements: Tolerances.

B. Maximum Variation from Plumb: 0.06 inches every 3 ft non-cumulative or 1/16 inches per 10 ft, whichever is less.

C. Maximum Misalignment of Two Adjoining Members Abutting in Plane: 1/32 inch.

3.4 ADJUSTING

A. Section 01700 - Execution Requirements: Testing, adjusting and balancing.

B. Adjust operating hardware for smooth operation.

3.5 CLEANING

A. Section 01700 - Execution Requirements: Final cleaning.

B. Remove protective material from pre-finished aluminum surfaces.

C. Wash down surfaces with solution of mild detergent in warm water, applied with soft, clean wiping cloths. Take care to remove dirt from corners. Wipe surfaces clean.

D. Remove excess sealant by method acceptable to sealant Manufacturer.

3.6 PROTECTION OF INSTALLED CONSTRUCTION

A. Section 01700 - Execution Requirements: Protecting installed construction.

B. Protect finished Work from damage.

END OF SECTION

SECTION 08520

ALUMINUM WINDOWS

PART 1 - GENERAL

1.1 SUMMARY

A. Section includes extruded aluminum windows with fixed and operating sash, factory glazed, operating hardware and, insect screens.

B. Related Sections:
1. Section 05500 - Metal Fabrications: Steel lintels
2. Section 06114 - Wood Blocking and Curbing: Wood perimeter shims
3. Section 07260 - Vapor Retarders: Perimeter vapor seal between window frame and adjacent construction
4. Section 07270 - Air Barriers: Perimeter air seal between window frame and adjacent construction
5. Section 07900 - Joint Sealers: Perimeter sealant and back-up materials
6. Section 08800 - Glazing.

1.2 REFERENCES

A. Aluminum Association:
1. AA DAF-45 - Designation System for Aluminum Finishes.

B. American Architectural Manufacturers Association:
1. AAMA 101 - Voluntary Specifications for Aluminum, Vinyl (PVC) and Wood Windows and Glass Doors
2. AAMA 611 - Voluntary Specification for Anodized Architectural Aluminum
3. AAMA 1503 - Voluntary Test Method for Thermal Transmittance and Condensation Resistance of Windows, Doors and Glazed Wall Sections.

C. American National Standards Institute:
1. ANSI Z97.1 - Safety Glazing Materials Used in Buildings Safety.

D. American Society of Civil Engineers:
1. ASCE 7 - Minimum Design Loads for Buildings and Other Structures.

E. ASTM International:
1. ASTM A123/A123M - Standard Specification for Zinc (Hot-Dip Galvanized) Coatings on Iron and Steel Products
2. ASTM B209 - Standard Specification for Aluminum and Aluminum-Alloy Sheet and Plate
3. ASTM B221 - Standard Specification for Aluminum and Aluminum-Alloy Extruded Bars, Rods, Wire, Profiles, and Tubes
4. ASTM D3656 - Standard Specification for Insect Screening and Louver Cloth Woven from Vinyl-Coated Glass Yarns

5. ASTM E283 - Standard Test Method for Determining the Rate of Air Leakage Through Exterior Windows, Curtain Walls, and Doors Under Specified Pressure Differences Across the Specimen
6. ASTM E330 - Standard Test Method for Structural Performance of Exterior Windows, Curtain Walls, and Doors By Uniform Static Air Pressure Difference
7. ASTM E331 - Standard Test Method for Water Penetration of Exterior Windows, Curtain Walls, and Doors By Uniform Static Air Pressure Difference
8. ASTM E547 - Standard Test Method for Water Penetration of Exterior Windows, Curtain Walls, and Doors by Cyclic Static Air Pressure Differential
9. ASTM E1105 - Standard Test Method for Field Determination of Water Penetration of Installed Exterior Windows, Curtain Walls, and Doors by Uniform or Cyclic Static Air Pressure Difference
10. ASTM F588 - Standard Test Methods for Resistance of Window Assemblies to Forced Entry Excluding Glazing.

F. Glass Association of North America:
1. GANA - Glazing Manual.

G. National Fenestration Rating Council Incorporated:
1. NFRC 100 - Procedures for Determining Fenestration Product U-Factors.

H. SSPC: The Society for Protective Coatings:
1. SSPC Paint 20 - Zinc-Rich Primers (Type I - Inorganic and Type II - Organic)
2. SSPC Paint 25 - Red Iron Oxide, Zinc Oxide, Raw Linseed Oil, and Alkyd Primer.

1.3 SYSTEM DESCRIPTION

A. Windows: Extruded aluminum sections, factory fabricated, factory finished, factory glazed vision glass, related flashings, anchorage and attachment devices.

B. Configuration: Conform to AAMA 101 Designations for windows required for Project; single hung; bottom sash side loads for removal, bevel sash and fixed glazing perimeter.

C. Glazing: Exterior type; 1” inch thick insulating unit tinted glass.

D. Forced Entry Resistance: Conform to ASTM F588 Type A.

1.4 PERFORMANCE REQUIREMENTS

A. Primary Performance Requirements: Aluminum windows to meet performance criteria for AAMA 101 Designation HC40 Heavy Commercial or better.

B. Deflection: Limit member deflection to 1/175 of longer dimension with full recovery of glazing materials. Test shall be conducted pursuant with ASTM E 330.

C. Assembly: To accommodate, without damage to components or deterioration of seals, movement between window and perimeter framing, deflection of lintel.

D. Thermal Transmittance of Assembly: Maximum U Value of .50 Btu/sq ft per hour per deg F when measured in accordance with AAMA 1503.

E. Air Infiltration: Limit air infiltration through assembly to 0.1 cfm/min/sq ft of wall area, measured at reference differential pressure across assembly of 6.24 psf as measured in accordance with ASTM E283.

F. Water Leakage: None, when measured in accordance with ASTM E331 and ASTM E547 at a static air pressure difference of 15 psf.

G. System Internal Drainage: Drain water entering joints, condensation occurring in glazing channels, and migrating moisture occurring within system, to exterior by weep drainage network.

H. Air and Vapor Seal: Maintain continuous air barrier and vapor retarder throughout assembly, primarily in line with pane of glass and heel bead of glazing compound. Position thermal insulation on exterior surface of air barrier and vapor retarder.

1.5 SUBMITTALS

A. Section 01330 - Submittal Procedures: Submittal procedures.

B. Shop Drawings: Indicate opening dimensions, framed opening tolerances, affected related Work, details of assemblies, hardware, glazing details and installation requirements.

C. Product Data: Submit component dimensions, anchorage and fasteners, glass, internal drainage, and typical details.
   1. For installed products to comply with design loads, include structural analysis data prepared by or under the supervision of a qualified professional engineer detailing fabrication and assembly of aluminum windows and used to determine the following:
      a. Structural test pressures and design pressures for wind loads per local code requirements.
   2. Operating instructions for each type of aluminum window.

D. Samples: Submit two 12 x 12 inches in size illustrating window frame section, factory finished aluminum surfaces, glass units. Submit two samples of operating hardware.

E. Qualification Data: For Installer and Manufacturer.

F. Maintenance Data: For operable window sash, operating hardware, weather stripping and finishes to be included in maintenance manuals.

G. Manufacturer's Certificates: Certify Product performance ratings by independent third party such as AAMA, CAWM, or NFRC as meeting or exceeding specified requirements.

1.6 QUALITY ASSURANCE

A. Perform Work in accordance with the following:
   1. Aluminum Windows: Fabricate window assemblies in accordance with AAMA 101 for types of windows required.
   2. Insulated Glass: Fabricate insulated glass units in accordance with GANA (formerly FGMA) Glazing Manual.
   3. Maintain one copy of each document on site.

1.7 QUALIFICATIONS

A. Manufacturer: Company specializing in manufacturing commercial aluminum windows with minimum three years documented experience.

B. Installer: Company specializing in installation of commercial aluminum windows with minimum three years documented experience and with service facilities within 100 miles of Project.

1.8 PRE-INSTALLATION MEETINGS

A. Section 01300 - Administrative Requirements: Pre-installation meeting.

B. Convene minimum two weeks prior to commencing work of this section.

1.9 DELIVERY, STORAGE, AND PROTECTION

A. Section 01600 - Product Requirements: Product storage and handling requirements.

B. Handle Work of this section in accordance with AAMA CW-10-97.

C. Store and handle windows, hardware and all items in strict compliance with the Manufacturer’s instructions.

D. Protect factory finished aluminum surfaces. Do not use adhesive papers or sprayed coatings that bond when exposed to sunlight or weather.

1.10 ENVIRONMENTAL REQUIREMENTS

A. Section 01600 - Product Requirements.

B. Do not install glazing materials when ambient temperature is less than 40 degrees F.

C. Maintain this minimum temperature during and after installation of glazing materials.

D. Field Measurements: Verify aluminum window openings by field measurements before fabrication and indicate measurements on Shop Drawings.
   1. Established Dimensions: Where field measurements cannot be made without delaying the Work, establish opening dimensions and proceed with fabricating

aluminum windows without field measurements. Coordinate wall construction to ensure that actual opening dimensions correspond to established dimensions.

1.11 WARRANTY

A. Section 01700 - Execution Requirements: Product warranties and product bonds.

B. Warranty Period:
1. Window: Three years from date of Substantial Completion.
2. Glazing: Five years from date of Substantial Completion.
a. Seal failure, interpane dusting or misting, and replacement of same.
3. Metal Finish: Five years from date of Substantial Completion.

PART 2 - PRODUCTS

2.1 ALUMINUM WINDOWS

A. Manufacturers:
1. All Seasons Commercial, Model 2665 Single Hung
2. EFCO Corp.
3. Kawneer Co., Inc.
4. Traco Model
5. Substitutions: Section 01600 - Product Requirements.

B. Product Description: Aluminum windows thermally broken with interior portion of frame insulated from exterior portion; flush glass stops of screw fastened type.
1. Reinforced Mullion: Extruded aluminum with integral reinforcement of aluminum structural section.

2.2 COMPONENTS

A. Extruded Aluminum: Material Standard: ASTM B221, G.S. 10A-T5; 6063-T5 alloy and temper.

B. Frame Depth: Not less than 4".

C. Member Wall Thickness: Each master frame member shall have minimum wall thickness of 0.080" and shall provide structural strength to meet specified performance requirements. Each sash member shall have a minimum wall thickness of 0.080". All horizontal sash members shall be tubular construction. Meeting rail shall have a continuous interlock with double weather stripping.

D. Dimensions: Reference to dimensions for wall thickness and other cross-sectional dimensions of window members are nominal and in compliance with ANSI H35.2-1990.

E. Mullions and Cover Plates: Shall be extruded aluminum of 6063-T5 alloy and temper of profile and dimensions indicated on drawings. Mullions shall provide structural properties to resist wind pressure required by performance criteria and standards.

F. Thermal Barrier.
1. Frame thermal barrier shall be a minimum of 5/16” separation consisting of a two-part, chemically curing high density polyurethane which is mechanically and adhesively bonded to the aluminum.
2. Sash thermal barrier shall be a minimum of 1/4” separation consisting of a two-part, chemically curing high density polyurethane in conditioned thermal pockets which is mechanically and adhesively bonded to the aluminum.

G. Balances: block and tackle Class 5 heavy duty spring with larger frame jamb extrusions conforming to AAMA 902 and of appropriate capacity to hold sash stationary and permit smooth operation

H. Steel Sections: Profiled to suit mullion sections.

I. Insulating Glass: Sealed double pane units conforming to requirements in Section 08800 - Glazing.
1. Outer Pane: Green-Blue tinted Low E float glass
2. Inner Pane: Clear float glass
3. Pane Thickness: Minimum 1/4 inch thick. Determined by size or wind and suction loads
4. Minimum Total Unit Thickness: 1 inch
5. Glazing Materials: Manufacturer’s standard conforming with requirements specified in Section 08800 - Glazing.

J. Hardware:
1. Sash lock: Lever handle with cam lock.

K. Sills: Extruded aluminum; sloped for positive wash; fit under sash beyond wall face; one piece full width of opening jamb angles to terminate sill end.

L. Sub-Sills: Extruded aluminum; sloped for positive wash; fit under sash to Project beyond wall face; one piece full width of opening.

M. Operable Sash Weather Stripping: Resilient plastic; permanently resilient, profiled to effect weather seal.

N. Insect Screen Frame: Extruded aluminum frame of rectangular sections; fit with adjustable hardware; nominal size similar to operable glazed unit.

O. Insect Screens: Shall be aluminum, natural color to match frame.

P. Receptor system: head and jamb – two piece snap together receptor system.

2.3 ACCESSORIES

A. Fasteners and Anchors: Stainless steel.

B. Bituminous Paint: Fibered asphaltic type.

C. Limit Stops: Resilient rubber.

2.4 FABRICATION

A. Fabricate components with minimum clearances and shim spacing around perimeter of assembly, yet enabling installation and dynamic movement of perimeter seal.

B. Accurately fit and secure joints and corners. Make joints flush, hairline, and weatherproof.

C. Prepare components to receive anchor devices. Fabricate anchors.

D. Arrange fasteners and attachments to ensure concealment from view.

E. Prepare components with internal reinforcement for operating hardware.

F. Furnish internal reinforcement in mullions with galvanized steel members to maintain rigidity.

G. Permit internal drainage weep holes and channels to migrate moisture to exterior. Furnish internal drainage of glazing spaces to exterior through weep holes.

H. Assemble insect screen frame, miter and reinforce frame corners. Fit mesh taut into frame and secure. Fit frame with four spring loaded stainless steel pin retainers.

I. Double weatherstrip operable units.

J. Factory glaze window units. Install glass in accordance with Section 08800, to glazing method required to achieve performance criteria.

2.5 SHOP FINISHING

A. Finish Coatings: Conform to AAMA 611.

B. Clear Anodized Aluminum Surfaces: AA-M12C22A41 non-specular as fabricated mechanical finish, medium matte chemical finish, and Architectural Class I 0.7 mils clear anodized coating.

C. Locks, Operators, and Exposed Hardware: Baked Enameled to color as selected by Architect.

D. Pull Handles: Baked enamel color as selected by Architect.

E. Screens: Natural aluminum color.

F. Apply coat of bituminous paint on concealed aluminum surfaces in contact with cementitious or dissimilar materials.

G. Concealed Steel Items: Galvanized in accordance with ASTM A123/A123M to thickness Grade 85, 2.0 oz/sq ft.

PART 3 - EXECUTION

3.1 EXAMINATION

A. Section 01300 - Administrative Requirements: Coordination and project conditions.

B. Verify wall openings and adjoining air and vapor seal materials are ready to receive Work of this section.

3.2 INSTALLATION

A. Install windows in accordance with Manufacturer's recommendations and shop drawings with skilled craftspeople.

B. Attach window frame and shims to perimeter opening to accommodate construction tolerances and other irregularities.

C. Align window plumb and level, free of warp or twist. Maintain dimensional tolerances and alignment with adjacent Work.

D. Install sill and sill end angles.

E. Set sill members in bed of sealant or with gaskets, for weathertight construction.

F. Install windows and components to drain condensation, water penetrating joints, and moisture migrating within windows to the exterior.

G. Separate aluminum and other corrodible surfaces from sources of corrosion or electrolytic action at points of contact with other materials.

H. Install thermal isolation where components penetrate or disrupt building insulation. Pack fibrous insulation in shim spaces at perimeter of assembly to maintain continuity of thermal barrier.

I. Coordinate attachment and seal of perimeter air barrier and vapor retarder materials.

J. Install operating hardware.

3.3 ERECTION TOLERANCES

A. Section 01400 - Quality Requirements: Tolerances.

B. Maximum Variation from Level or Plumb: 1/16 inches every 3 ft non-cumulative or 1/8 inches per 10 ft, whichever is less.

3.4 ADJUSTING

A. Section 01700 - Execution Requirements: Testing, adjusting, and balancing.

B. Adjust hardware for smooth operation and secure weathertight closure.

3.5 CLEANING

A. Section 01700 - Execution Requirements: Final cleaning.

B. Remove protective material from factory finished aluminum surfaces.

C. Wash surfaces by method recommended and acceptable to sealant and window Manufacturer; rinse and wipe surfaces clean.

D. Remove excess sealant by moderate use of mineral spirits or other solvent acceptable to sealant and window Manufacturer.

3.6 DEMONSTRATION

A. Engage a factory-authorized service representative to train Owner's maintenance personnel to adjust, operate, and maintain window operating system.

END OF SECTION

SECTION 08710

DOOR HARDWARE

PART 1 - GENERAL

1.1 SUMMARY

A. Section includes hardware for wood, steel and aluminum doors.
   1. Provide door gaskets, including weather-stripping and seals, and thresholds.

B. Related Sections:
   1. Section 06200 - Finish Carpentry: Wood door frames
   2. Section 08110 - Standard Steel Doors
   3. Section 08115 - Standard Steel Frames
   4. Section 08212 - Flush Wood Doors
   5. Section 08333 - Overhead Coiling Doors: Lockable coiling doors
   6. Section 08410 - Metal-Framed Storefronts: Door hardware.

1.2 REFERENCES

A. American National Standards Institute:
   1. ANSI A156.1 - Butts and Hinges
   2. ANSI A156.2 - Bored and Preassembled Locks and Latches
   3. ANSI A156.3 - Exit Devices
   4. ANSI A156.4 - Door Controls - Closures
   5. ANSI A156.5 - Auxiliary Locks and Associated Products
   6. ANSI A156.6 - Architectural Door Trim
   7. ANSI A156.7 - Template Hinge Dimensions
   8. ANSI A156.8 - Door Controls - Overhead Holders
   9. ANSI A156.12 - Interconnected Locks and Latches
   10. ANSI A156.13 - Mortise Locks and Latches
   11. ANSI A156.15 - Closer Holder Release Devices
   12. ANSI A156.16 - Auxiliary Hardware
   13. ANSI A156.18 - Materials and Finishes
   14. ANSI A156 - Complete Set of 24 BHMA Standards (A156 Series) with Binder.

B. Builders Hardware Manufacturers Association:
   1. BHMA Directory of Certified Products.

C. National Fire Protection Association:
   1. NFPA 80 - Standard for Fire Doors, Fire Windows
   2. NFPA 252 - Standard Methods of Fire Tests of Door Assemblies.

D. Underwriters Laboratories Inc.:
   1. UL 10B - Fire Tests of Door Assemblies
   2. UL 305 - Panic Hardware
   3. UL - Building Materials Directory.

E. Intertek Testing Services (Warnock Hersey Listed):
   1. WH - Certification Listings.

1.3 PERFORMANCE REQUIREMENTS

A. Fire Rated Openings: Provide door hardware listed by UL or Intertek Testing Services (Warnock Hersey Listed), or other testing laboratory approved by applicable authorities.
   1. Hardware: Tested in accordance with NFPA 252.

1.4 SUBMITTALS

A. Section 01330 - Submittal Procedures: Submittal procedures.

B. Product Data: Include installation details, material descriptions, dimensions of individual components and profiles, and finishes.

C. Door Hardware Schedule: Prepared by or under the supervision of supplier, detailing fabrication and assembly of door hardware, as well as procedures and diagrams. Coordinate the final Door Hardware Schedule with doors, frames, and related work to ensure proper size, thickness, hand, function, and finish of door hardware.
   1. Format: Comply with scheduling sequence and vertical format in DHI's "Sequence and Format for the Hardware Schedule."
   2. Organization: Organize the Door Hardware Schedule into door hardware sets indicating complete designations of every item required for each door or opening.
      a. Organize door hardware sets in same order as in the Door Hardware Schedule at the end of Part 3.
   3. Content: Include the following information:
      a. Type, style, function, size, label, hand, and finish of each door hardware item
      b. Manufacturer of each item
      c. Fastenings and other pertinent information
      d. Location of each door hardware set, cross-referenced to Drawings, both on floor plans and in door and frame schedule
      e. Explanation of abbreviations, symbols, and codes contained in schedule
      f. Mounting locations for door hardware
      g. Door and frame sizes and materials.

D. Keying Schedule: Prepared by or under the supervision of supplier, detailing Owner's final keying instructions for locks. Include schematic keying diagram and index each key set to unique door designations.

E. Warranties: Special warranties specified in this Section.

F. Samples:
   1. Submit one sample of typical hinge, latchset, lockset, and closer, illustrating style, color, and finish.
   2. Approved samples may be incorporated into Work.

G. Manufacturer's Installation Instructions: Submit special procedures, and perimeter conditions requiring special attention.

1.5 CLOSEOUT SUBMITTALS

A. Section 01700 - Execution Requirements: Closeout procedures.

B. Project Record Documents: Record actual locations of installed cylinders and their master key code.

C. Operation and Maintenance Data: Submit data on operating hardware, lubrication requirements, and inspection procedures related to preventative maintenance.

D. Keys: Deliver with identifying tags to Owner by security shipment direct from hardware supplier.

1.6 QUALITY ASSURANCE

A. Installer Qualifications: An experienced Installer who has completed door hardware similar in material, design, and extent to that indicated for this Project and whose work has resulted in construction with a record of successful in-service performance.

B. Supplier Qualifications: Door hardware supplier with warehousing facilities in Project's vicinity and who is or employs a qualified Architectural Hardware Consultant, available during the course of the Work to consult with Contractor, Architect, and Owner about door hardware and keying.
1. Scheduling Responsibility: Preparation of door hardware and keying schedules.

C. Architectural Hardware Consultant Qualifications: A person who is currently certified by the Door and Hardware Institute as an Architectural Hardware Consultant and who is experienced in providing consulting services for door hardware installations that are comparable in material, design, and extent to that indicated for this Project.

D. Source Limitations: Obtain each type and variety of door hardware from a single Manufacturer, unless otherwise indicated.

E. Regulatory Requirements: Comply with provisions of the following:
1. Where indicated to comply with accessibility requirements, comply with Americans with Disabilities Act (ADA), "Accessibility Guidelines for Buildings and Facilities (ADAAG),"as follows:
a. Handles, Pulls, Latches, Locks, and other Operating Devices: Shape that is easy to grasp with one hand and does not require tight grasping, tight pinching, or twisting of the wrist.
b. Door Closers: Comply with the following maximum opening-force requirements indicated:
1) Interior Hinged Doors: 5 lbf applied perpendicular to door.
2) Fire Doors: Minimum opening force allowable by authorities having jurisdiction.

c. Thresholds: Not more than 1/2 inch high. Bevel raised thresholds with a slope of not more than 1:2.

2. NFPA 101: Comply with the following for means of egress doors:
   a. Latches, Locks, and Exit Devices: Not more than 15 lbf to release the latch. Locks shall not require the use of a key, tool, or special knowledge for operation.
   b. Door Closers: Not more than 30 lbf to set door in motion and not more than 15 lbf to open door to minimum required width.
   c. Thresholds: Not more than 1/2 inch high.
3. Electrified Door Hardware: Listed and labeled as defined in NFPA 70, Article 100, by a testing agency acceptable to authorities having jurisdiction.

F. Fire-Rated Door Assemblies: Provide door hardware for assemblies complying with NFPA 80 that are listed and labeled by a testing and inspecting agency acceptable to authorities having jurisdiction, for fire ratings indicated, based on testing according to NFPA 252.
   1. Test Pressure: Test at atmospheric pressure.

G. Keying Conference: Conduct conference at Project site to comply with requirements in Division 1 Section "Project Meetings." Incorporate keying conference decisions into final keying schedule after reviewing door hardware keying system including, but not limited to, the following:
   1. Function of building, flow of traffic, purpose of each area, degree of security required, and plans for future expansion
   2. Preliminary key system schematic diagram
   3. Requirements for key control system
   4. Address for delivery of keys.

H. Maintain one copy of each document on site.

1.7 QUALIFICATIONS

A. Manufacturer: Company specializing in manufacturing products specified in this section with minimum three years documented experience.

B. Hardware Supplier: Company specializing in supplying commercial door hardware with minimum three years documented experience.

C. Hardware Supplier Personnel: Employ Architectural Hardware Consultant (AHC) to assist in work of this section.

1.8 PRE-INSTALLATION MEETINGS

A. Section 01300 - Administrative Requirements: Pre-installation meeting.

B. Convene minimum two weeks prior to commencing work of this section.

C. Include persons involved with installation of doors, frames, and hardware.

1.9 DELIVERY, STORAGE, AND HANDLING

A. Section 01600 - Product Requirements: Product storage and handling requirements.

B. Package hardware items individually with necessary fasteners, instructions, and installation templates, when necessary; label and identify each package with door opening code to match hardware schedule.

C. Deliver keys to Owner by registered mail or overnight package service.

1.10 COORDINATION

A. Section 01300 - Administrative Requirements: Coordination and project conditions.

B. Coordinate Work with other directly affected sections involving manufacture or fabrication of internal reinforcement for door hardware and recessed items.
   1. Provide templates or actual hardware as required to ensure proper preparation of doors and frames.

C. Sequence installation to accommodate required utility connections.

D. Coordinate Owner's keying requirements during course of Work.

1.11 WARRANTY

A. Section 01700 - Execution Requirements: Product warranties and product bonds.

B. General Warranty: Special warranties specified in this Article shall not deprive Owner of other rights Owner may have under other provisions of the Contract Documents and shall be in addition to, and run concurrent with, other warranties made by Contractor under requirements of the Contract Documents.

C. Special Warranty: Written warranty, executed by Manufacturer agreeing to repair or replace components of door hardware that fail in materials or workmanship within specified warranty period. Failures include, but are not limited to, the following:
   1. Structural failures including excessive deflection, cracking, or breakage
   2. Faulty operation of operators and door hardware
   3. Deterioration of metals, metal finishes, and other materials beyond normal weathering.

D. Warranty Period: Three years from date of Substantial Completion, unless otherwise indicated.

E. Warranty Period for Manual Closers: 10 years from date of Substantial Completion.

1.12 MAINTENANCE MATERIALS

A. Section 01700 - Execution Requirements: Maintenance materials.

B. Furnish special wrenches and tools applicable for each different and for each special hardware component.

C. Furnish maintenance tools and accessories supplied by hardware component Manufacturer.

1.13 EXTRA MATERIALS

A. Section 01700 - Execution Requirements: Spare parts and maintenance products.

B. Furnish ten extra key lock cylinders for each master keyed group.

PART 2 - PRODUCTS

2.1 SCHEDULED DOOR HARDWARE

A. General: Provide door hardware for each door to comply with requirements in this Section, door hardware sets indicated in door and frame schedule, and the Door Hardware Schedule at the end of Part 3.
1. Door Hardware Sets: Provide quantity, item, size, finish or color indicated, and products equivalent in function and comparable in quality to named products.

B. Designations: Requirements for design, grade, function, finish, size, and other distinctive qualities of each type of door hardware are indicated in the Door Hardware Schedule at the end of Part 3. Products are identified by using door hardware designations, as follows:
1. Named Manufacturer's Products: Product designation and Manufacturer are listed for each door hardware type required for the purpose of establishing minimum requirements. Manufacturers' names are abbreviated in the Door Hardware Schedule.

2.2 HINGES AND PIVOTS

A. Manufacturers: Subject to compliance with requirements, provide products by one of the following:
1. Hinges:
a. Hager Companies (HAG)
b. Stanley Commercial Hardware; Div. of The Stanley Works (ST).

B. Quantity: Provide the following, unless otherwise indicated:
1. Two Hinges: For doors with heights up to 60 inches
2. Three Hinges: For doors with heights 61 to 90 inches
3. Four Hinges: For doors with heights 91 to 120 inches
4. For doors with heights more than 120 inches, provide 4 hinges, plus 1 hinge for every 30 inches of door height greater than 120 inches.

C. Size: Provide the following, unless otherwise indicated, with hinge widths sized for door thickness and clearances required:

Maximum Door Size (inches)	Hinge Height (inches)	Metal Thickness (inches) Standard Weight	Heavy Weight
32 by 84 by 1-3/8	3-1/2	0.123	-
36 by 84 by 1-3/8	4	0.130	-
36 by 84 by 1-3/4	4-1/2	0.134	0.180
42 by 90 by 1-3/4	4-1/2	0.134	0.180
48 by 120 by 1-3/4	5	0.146	0.190

D. Template Requirements: Except for hinges and pivots to be installed entirely (both leaves) into wood doors and frames, provide only template-produced units.

E. Hinge Weight: Unless otherwise indicated, provide the following:
1. Entrance Doors: Heavy-weight hinges
2. Doors with Closers: Antifriction-bearing hinges
3. Interior Doors: Standard-weight hinges.

F. Hinge Base Metal: Unless otherwise indicated, provide the following:
1. Exterior Hinges: Stainless steel, with stainless-steel pin
2. Interior Hinges: Brass, with stainless-steel pin
3. Hinges for Fire-Rated Assemblies: Steel, with steel pin.

G. Hinge Options: Comply with the following where indicated in the Door Hardware Schedule or on Drawings:
1. Nonremovable Pins: Provide set screw in hinge barrel that, when tightened into a groove in hinge pin, prevents removal of pin while door is closed; for the following applications:
   a. Out swinging exterior doors
   b. Out swinging corridor doors with locks.
2. Corners: Square.

H. Fasteners: Comply with the following:
1. Machine Screws: For metal doors and frames. Install into drilled and tapped holes.
2. Wood Screws: For wood doors and frames.
3. Threaded-to-the-Head Wood Screws: For fire-rated wood doors.
4. Screws: Phillips flat-head screws; machine screws (drilled and tapped holes) for metal doors wood screws for wood doors and frames. Finish screw heads to match surface of hinges.

2.3 LOCKS AND LATCHES

A. Manufacturers: Subject to compliance with requirements, provide products by one of the following:
1. Mechanical Locks and Latches:

a. Best Lock Corporation (BLC).
b. Corbin Russwin Architectural Hardware; Div. of Yale Security Inc. (CR).
c. Schlage Lock Company; an Ingersoll-Rand Company (SCH).

B. Lock Trim: Comply with the following:
1. Lever: Wrought, forged, or cast
2. Escutcheon (Rose): Wrought, forged, or cast
3. Dummy Trim: Match lever lock trim and escutcheons
4. Lockset Designs: Provide the lockset design designated below or, if sets are provided by another Manufacturer, provide designs that match those designated:

Mortise Locks: Provide design indicated.

C. Lock Throw: Comply with testing requirements for length of bolts to comply with labeled fire door requirements, and as follows:
1. Bored Locks: Minimum 1/2-inch latchbolt throw
2. Mortise Locks: Minimum 3/4-inch latchbolt throw
3. Deadbolts: Minimum 1-inch bolt throw.

D. Backset: 2-3/4 inches, unless otherwise indicated.

2.4 DOOR BOLTS

A. Manufacturers: Subject to compliance with requirements, provide products by one of the following:
1. Flush Bolts:
a. Glynn-Johnson; an Ingersoll-Rand Company (GJ)
b. Hager Companies (HAG)
c. Triangle Brass Manufacturing Company, Inc. (TBM).

B. Bolt Throw: Comply with testing requirements for length of bolts to comply with labeled fire door requirements, and as follows:
1. Mortise Flush Bolts: Minimum 3/4-inch throw.

2.5 CYLINDERS AND KEYING

A. Manufacturers: Subject to compliance with requirements, provide products by one of the following:
1. Cylinders: Same Manufacturer as for locks and latches.
2. Key Control Systems:
a. Best Lock Corporation (BLC)
b. Key Control Systems, Inc. (KCS)
c. Sargent Manufacturing Company; Div. of ESSEX Industries, Inc. (SGT).

B. Cylinders: Manufacturer's standard tumbler type, constructed from brass or bronze, stainless steel, or nickel silver, and complying with the following:
1. Number of Pins: Six
2. Mortise Type: Threaded cylinders with rings and straight- or clover-type cam.

C. Permanent Cores: Manufacturer's standard; finish face to match lockset; complying with the following:
   1. Interchangeable Cores: Core insert, removable by use of a special key, and usable with other Manufacturers' cylinders.

D. Construction Keying: Comply with the following:
   1. Construction Cores: Provide construction cores that are replaceable by permanent cores. Provide 10 construction master keys.
      a. Replace construction cores with permanent cores, as directed by Owner.

E. Keying System: Unless otherwise indicated, provide a factory-registered keying system complying with the following requirements:
   1. Great-Grand Master Key System: Cylinders are operated by a change key, a master key, a grand master key, and a great-grand master key.

F. Keys: Provide nickel-silver keys complying with the following:
   1. Stamping: Permanently inscribe each key with a visual key control number and include the following notation:
      a. Notation: "DO NOT DUPLICATE."
   2. Quantity: In addition to three keys for each lock, provide the following:
      a. Cylinder Change Keys: Five
      b. Master Keys: Five
      c. Grand Master Keys: Five
      d. Great-Grand Master Keys: Five.

G. Key Control System: BHMA Grade 1 system, including key-holding hooks, labels, two sets of key tags with self-locking key holders, key-gathering envelopes, and temporary and permanent markers. Contain system in metal cabinet with baked-enamel finish.
   1. Portable Cabinet: Tray for mounting in file cabinet, equipped with key-holding panels, envelopes, and cross-index system.
   2. Capacity: Able to hold keys for 150 percent of the number of locks.
   3. Cross-Index System: Set up by key control Manufacturer, complying with the following:
      a. Card Index: Furnish four sets of index cards for recording key information. Include three receipt forms for each key-holding hook.
      b. Computer Software: Furnish cross-index software for recording and reporting key-holder listings, tracking keys and lock and key history, and printing receipts for transactions. Include instruction manual.

2.6 STRIKES

A. Strikes: Provide Manufacturer's standard strike with strike box for each latch or lock bolt, with curved lip extended to protect frame, finished to match door hardware set, unless otherwise indicated, and as follows:
   1. Flat-Lip Strikes: For locks with three-piece antifriction latchbolts, as recommended by Manufacturer.

2.7 OPERATING TRIM

A. Manufacturers: Subject to compliance with requirements, provide products by one of the following:
   1. Forms + Surfaces (FS)
   2. Stanley Commercial Hardware; Div. of The Stanley Works (ST)
   3. Triangle Brass Manufacturing Company, Inc. (TBM).

B. Materials: Fabricate from stainless steel, unless otherwise indicated.

C. Push-Pull Design: As indicated at the end of Part 3.

2.8 CLOSERS

A. Manufacturers: Subject to compliance with requirements, provide products by one of the following:
   1. Surface-Mounted Closers:
      a. Corbin Russwin Architectural Hardware; Div. of Yale Security Inc. (CR)
      b. LCN Closers; an Ingersoll-Rand Company (LCN).

B. Size of Units: Unless otherwise indicated, comply with Manufacturer's written recommendations for size of door closers depending on size of door, exposure to weather, and anticipated frequency of use. Provide factory-sized closers, adjustable to meet field conditions and requirements for opening force.

2.9 PROTECTIVE TRIM UNITS

A. Manufacturers: Subject to compliance with requirements, provide products by one of the following:
   1. Metal Protective Trim Units:
      a. Hager Companies (HAG)
      b. NT Quality Hardware; an Ingersoll-Rand Company (NTQ)
      c. Triangle Brass Manufacturing Company, Inc. (TBM).

B. Materials: Fabricate protection plates from the following:
   1. Stainless Steel: 0.050 inch thick; beveled top and 2 sides.

C. Fasteners: Provide Manufacturer's standard exposed fasteners for door trim units consisting of either machine or self-tapping screws.

D. Furnish protection plates sized 1-1/2 inches less than door width on push side and 1/2 inch less than door width on pull side, by height specified in Door Hardware Schedule.

2.10 STOPS AND HOLDERS

A. Manufacturers: Subject to compliance with requirements, provide products by one of the following:
   1. Hager Companies (HAG)
   2. Triangle Brass Manufacturing Company, Inc. (TBM)

B. Standards: Comply with the following:
   1. Stops and Bumpers: BHMA A156.16
   2. Door Silencers: BHMA A156.16.

C. Stops and Bumpers: BHMA Grade 1, unless Grade 2 is indicated.

D. Combination Overhead Stops and Holders: BHMA Grade 1, unless Grade 2 is indicated.

E. Floor Stops: For doors, unless wall or other type stops are scheduled or indicated. Do not mount floor stops where they will impede traffic.
   1. Where floor or wall stops are not appropriate, provide overhead holders.

F. Silencers for Metal Door Frames: BHMA Grade 1; neoprene or rubber, minimum diameter 1/2 inch; fabricated for drilled-in application to frame.

2.11 DOOR GASKETING

A. Manufacturers: Subject to compliance with requirements, provide products by one of the following:
   1. Door Gasketing:
      a. National Guard Products, Inc. (NGP)
      b. Pemko Manufacturing Co., Inc. (PEM)
      c. Zero International, Inc. (ZRO).
   2. Door Bottoms:
      a. National Guard Products, Inc. (NGP)
      b. Pemko Manufacturing Co., Inc. (PEM)
      c. Zero International, Inc. (ZRO).

B. General: Provide continuous weather-strip gasketing on exterior doors and provide smoke, light, or sound gasketing on interior doors where indicated or scheduled. Provide noncorrosive fasteners for exterior applications and elsewhere as indicated.
   1. Perimeter Gasketing: Apply to head and jamb, forming seal between door and frame.
   2. Door Bottoms: Apply to bottom of door, forming seal with threshold when door is closed.

C. Air Leakage: Not to exceed 0.50 cfm per foot of crack length for gasketing other than for smoke control, as tested according to ASTM E 283.

D. Smoke-Labeled Gasketing: Assemblies complying with NFPA 105 that are listed and labeled by a testing and inspecting agency acceptable to authorities having jurisdiction, for smoke-control ratings indicated, based on testing according to UL 1784.
   1. Provide smoke-labeled gasketing on 20-minute-rated doors, fire rated labeled, and on smoke-labeled doors.

E. Fire-Labeled Gasketing: Assemblies complying with NFPA 80 that are listed and labeled by a testing and inspecting agency acceptable to authorities having jurisdiction, for fire ratings indicated, based on testing according to UL 10B or NFPA 252.

F. Replaceable Seal Strips: Provide only those units where resilient or flexible seal strips are easily replaceable and readily available from stocks maintained by Manufacturer.

G. Gasketing Materials: Comply with ASTM D 2000 and AAMA 701/702.

2.12 THRESHOLDS

A. Manufacturers: Subject to compliance with requirements, provide products by one of the following:
1. National Guard Products, Inc. (NGP)
2. Pemko Manufacturing Co., Inc. (PEM)
3. Zero International, Inc. (ZRO).

2.13 EXIT DEVICES

A. Manufacturers: Subject to compliance with requirements, provide products by one of the following:
1. Corbin Russwin Architectural Hardware; Div. of Yale Security Inc. (CR)
2. Dorma (D)

B. Exit Devices: ANSI A156.3, Grade 1 rim type, with push pad, unless otherwise indicated. Furnish standard strikes with extended lips to protect trim from being marred by latch bolt verify type of cutouts provided in metal frames.
1. Types: Suitable for doors requiring exit devices.

2.14 MISCELLANEOUS DOOR HARDWARE

A. Manufacturers: Subject to compliance with requirements, provide products by one of the following:
1. Hager Companies (HAG)
2. Triangle Brass Manufacturing Company, Inc. (TBM).

B. If needed, add requirements for access control devices, such as digital keypads, proximity sensors, switch devices, etc.

2.15 FABRICATION

A. Base Metals: Produce door hardware units of base metal, fabricated by forming method indicated, using Manufacturer's standard metal alloy, composition, temper, and hardness. Furnish metals of a quality equal to or greater than that of specified door hardware units and BHMA A156.18 for finishes. Do not furnish Manufacturer's standard materials or forming methods if different from specified standard.

B. Fasteners: Provide door hardware manufactured to comply with published templates generally prepared for machine, wood, and sheet metal screws. Provide screws according to commercially recognized industry standards for application intended. Provide Phillips flat-head screws with finished heads to match surface of door hardware, unless otherwise indicated.

1. Concealed Fasteners: For door hardware units that are exposed when door is closed, except for units already specified with concealed fasteners. Do not use through bolts for installation where bolt head or nut on opposite face is exposed unless it is the only means of securely attaching the door hardware. Where through bolts are used on hollow door and frame construction, provide sleeves for each through bolt.
2. Steel Machine or Wood Screws: For the following fire-rated applications:
   a. Mortise hinges to doors.
   b. Strike plates to frames.
   c. Closers to doors and frames.
3. Steel Through Bolts: For the following fire-rated applications, unless door blocking is provided:
   a. Surface hinges to doors.
   b. Closers to doors and frames.
   c. Surface-mounted exit devices.
4. Spacers or Sex Bolts: For through bolting of hollow metal doors.
5. Fasteners for Wood Doors: Comply with requirements of DHI WDHS.2, "Recommended Fasteners for Wood Doors."

2.16 FINISHES

A. Standard: Comply with BHMA A156.18.

B. Protect mechanical finishes on exposed surfaces from damage by applying a strippable, temporary protective covering before shipping.

C. Appearance of Finished Work: Variations in appearance of abutting or adjacent pieces are acceptable if they are within one-half of the range of approved Samples. Noticeable variations in the same piece are not acceptable. Variations in appearance of other components are acceptable if they are within the range of approved Samples and are assembled or installed to minimize contrast.

D. BHMA Designations: Comply with base material and finish requirements indicated by the following:
   1. BHMA 626: Satin chromium plated over nickel, over brass or bronze base metal
   2. BHMA 628: Satin aluminum, clear anodized, over aluminum base metal
   3. BHMA 630: Satin stainless steel, over stainless-steel base metal
   4. BHMA 652: Satin chromium plated over nickel, over steel base metal
   5. BHMA 689: Aluminum painted, over any base metal.

PART 3 - EXECUTION

3.1 EXAMINATION

A. Examine doors and frames, with Installer present, for compliance with requirements for installation tolerances, labeled fire door assembly construction, wall and floor construction, and other conditions affecting performance.

B. Proceed with installation only after unsatisfactory conditions have been corrected.

3.2 PREPARATION

A. Steel Doors and Frames: Comply with DHI A115 series.
   1. Surface-Applied Door Hardware: Drill and tap doors and frames according to SDI 107.

B. Wood Doors: Comply with DHI A115-W series.

3.3 INSTALLATION

A. Mounting Heights: Mount door hardware units at heights indicated in following applicable publications, unless specifically indicated or required to comply with governing regulations:
   1. Standard Steel Doors and Frames: DHI's "Recommended Locations for Architectural Hardware for Standard Steel Doors and Frames"
   2. Custom Steel Doors and Frames: DHI's "Recommended Locations for Builders' Hardware for Custom Steel Doors and Frames"
   3. Wood Doors: DHI WDHS.3, "Recommended Locations for Architectural Hardware for Wood Flush Doors."

B. Install each door hardware item to comply with Manufacturer's written instructions. Where cutting and fitting are required to install door hardware onto or into surfaces that are later to be painted or finished in another way, coordinate removal, storage, and reinstallation of surface protective trim units with finishing work specified in Division 9 Sections. Do not install surface-mounted items until finishes have been completed on substrates involved.
   1. Set units level, plumb, and true to line and location. Adjust and reinforce attachment substrates as necessary for proper installation and operation.
   2. Drill and countersink units that are not factory prepared for anchorage fasteners. Space fasteners and anchors according to industry standards.

C. Key Control System: Place keys on markers and hooks in key control system cabinet, as determined by final keying schedule.

D. Thresholds: Set thresholds for exterior and acoustical doors in full bed of sealant complying with requirements specified in Division 7 Section "Joint Sealants."

3.4 ADJUSTING

A. Initial Adjustment: Adjust and check each operating item of door hardware and each door to ensure proper operation or function of every unit. Replace units that cannot be adjusted to operate as intended. Adjust door control devices to compensate for final operation of heating and ventilating equipment and to comply with referenced accessibility requirements.
   1. Door Closers: Adjust sweep period so that, from an open position of 70 degrees, the door will take at least 3 seconds to move to a point 3 inches from the latch, measured to the leading edge of the door.

2. All door hardware shall fully comply with the latest version of Texas Accessibility Standards (TAS) of the Architectural Barriers Act, Article 9102, Texas Civil Statutes.

3.5 CLEANING AND PROTECTION

A. Clean adjacent surfaces soiled by door hardware installation.

B. Clean operating items as necessary to restore proper function and finish.

C. Provide final protection and maintain conditions that ensure door hardware is without damage or deterioration at time of Substantial Completion.

3.6 DEMONSTRATION

A. Engage a factory-authorized service representative to train Owner's maintenance personnel to adjust, operate, and maintain door hardware and door hardware finishes.

3.7 DOOR HARDWARE SCHEDULE

HW-1 (Exterior Exit Doors)

3 ea.	Hinges	CB191, 4.5 x 4.5, NRP	ST	630
1 ea.	Lockset	35H, AW, 16, N,	BLC	626
1 ea.	Panic Hardware	5300, rim	D	626
1 ea.	Closer	DC6210, A11	CR	626
1 ea.	Threshold	2005T	PEM	719
1 ea.	Kick Plate	K0050, 10” High	TBM	630
1 ea.	Door Sweep	345A	PEM	719
1 ea.	Auto. Door Bottom	4301CRL (surface mtd.) w/ end plates	PEM	628
1 ea.	Door Stop	1214	TMB	6309
1 set	Weatherstrip	290AS	PEM	719

HW-2 (Storage Room)

6 ea.	Hinges	CB179, 4.5 x 4.5	ST	626
1 ea.	Lockset	73K, D, 16, D, lever lock	BLC	626
2 ea.	Flush Bolts	W3917	TBM	626
1 ea.	Closer	DC6210, A11	CR	626
1 set	Smoke Gasket	PK55D W/HSS2000	PEM	
1 ea.	Kick Plate	K0050, 10” High	TBM	630

HW-3 (Corridor exit)

3 ea.	Hinges	CB179, 4.5 x 4.5	ST	626
1 ea.	Lockset	73K, D, 16, R, lever lock	BLC	626
1 ea.	Panic Hardware	5300, rim	D	626
1 ea.	Closer	DC6210, A11	CR	626
1 ea.	Kick Plate	K0050, 10” High	TBM	630
1 ea.	Auto. Door Bottom	4301CRL (surface mtd.) w/ end plates	PEM	719
1 set	Smoke Gasket	PK55D W/HSS2000	PEM	
1 ea.	Door Stop	1214	TMB	6309

HW-4 (Storage rooms, Electrical, Data)

3 ea.	Hinges	CB179, 4.5 x 4.5	ST	626
1 ea.	Lockset	73K, D, 16, R, lever lock	BLC	626
1 ea.	Closer	DC6210, A11	CR	626
1 set	Smoke Gasket	PK55D W/HSS2000	PEM	
1 ea.	Wall Stop	1278CX	TBM	628

HW-5 (Toilets – Private)

3 ea.	Hinges	CB179, 4.5 x 4.5	ST	626
1 ea.	Privacy Set	73K, D, 16, L, lever lock	BLC	626
1 ea.	Closer	DC6210, A11	CR	626

1 set	Smoke Gasket	PK55D W/HSS2000	PEM	
1 ea.	Wall Stop	1278CX	TBM	628

HW-6 (Meeting Room)

3 ea.	Hinges	CB179, 4.5 x 4.5	ST	626
1 ea.	Passage	73K, D, 16, N, lever	BLC	626
1 ea.	Wall Stop	1278CX	TBM	628
1 ea.	Kick Plate	K0050, 4” High	TBM	630
1 ea.	Closer	DC6210, A11	CR	626
1 set	Smoke Gasket	PK55D W/HSS2000	PEM	

HW-7 (Office)

3 ea.	Hinges	CB179, 4.5 x 4.5	ST	626
1 ea.	Passage	73K, D, 16, R, lever lock	BLC	626
1 ea.	Wall Stop	1278CX	TBM	628
1 set	Smoke Gasket	PK55D W/HSS2000	PEM	

HW-8 (Toilets – Public)

3 ea.	Hinges	CB179, 4.5 x 4.5	ST	626
1 ea.	pull handle #1059-3 4"x16"		TMB	630
1 ea.	push plate #1001-3 4"x16" 32D		TMB	630
1 ea.	Wall Stop	1278CX	TBM	628
2 ea.	Kick Plate	K0050, 10” High	TBM	630
1 ea.	Closer	DC2210	CR	626
1 set	Smoke Gasket	PK55D W/HSS2000	PEM	

HW-9 (Storefront Entrance)

1 ea.	Threshold	158A	PEM	719
1 ea.	cylinder			

Remainder of Hardware by Door Supplier.

1 each deadlock
1 each door closers
1 each doorstop
1 each push bar,
1 each door pull,
1 each bottom rail weather-stripping
1 each panic hardware

HW-10 (Overhead doors)

1 ea. cylinder

Remainder of Hardware by Door Supplier.

END OF SECTION

SECTION 08800

GLAZING

PART 1 - GENERAL

1.1 SUMMARY

A. Section includes glass glazing for metal frames, doors, and windows.
   1. Glass glazing materials and installation requirements are included in this section for other sections referencing this section.

B. Related Sections:
   1. Section 07900 - Joint Sealers: Sealant and back-up material other than glazing sealants
   2. Section 08110 - Standard Steel Doors: Glazed doors
   3. Section 08212 - Flush Wood Doors: Glazed doors
   4. Section 08410 - Metal-Framed Storefronts
   5. Section 08520 - Aluminum Windows: Glazed windows.

1.2 REFERENCES

A. American National Standards Institute:
   1. ANSI Z97.1 - Safety Glazing Materials Used in Buildings Safety.

B. American Society of Civil Engineers:
   1. ASCE 7 - Minimum Design Loads for Buildings and Other Structures.

C. ASTM International:
   1. ASTM C570 - Standard Specification for Oil- and Resin-Base Caulking Compound for Building Construction
   2. ASTM C669 - Standard Specification for Glazing Compounds for Back Bedding and Face Glazing of Metal Sash
   3. ASTM C864 - Standard Specification for Dense Elastomeric Compression Seal Gaskets, Setting Blocks, and Spacers
   4. ASTM C920 - Standard Specification for Elastomeric Joint Sealants
   5. ASTM C1036 - Standard Specification for Flat Glass
   6. ASTM C1048 - Standard Specification for Heat-Treated Flat Glass-Kind HS, Kind FT Coated and Uncoated Glass
   7. ASTM C1172 - Standard Specification for Laminated Architectural Flat Glass.
   8. ASTM C1193 - Standard Guide for Use of Joint Sealants
   9. ASTM D4802 - Standard Specification for Poly (Methyl Methacrylate) Acrylic Plastic Sheet
   10. ASTM E90 - Standard Test Method for Laboratory Measurement of Airborne Sound Transmission Loss of Building Partitions and Elements
   11. ASTM E330 - Standard Test Method for Structural Performance of Exterior Windows, Curtain Walls, and Doors By Uniform Static Air Pressure Difference

12. ASTM E546 - Standard Test Method for Frost Point of Sealed Insulating Glass Units
13. ASTM E576 - Standard Test Method for Frost Point of Sealed Insulating Glass Units in the Vertical Position
14. ASTM E773 - Standard Test Methods for Seal Durability of Sealed Insulating Glass Units
15. ASTM E774 - Standard Specification for Sealed Insulating Glass Units
16. ASTM E1425 - Standard Practice for Determining the Acoustical Performance of Exterior Windows and Doors.

D. Glass Association of North America:
1. GANA - FGMA Sealant Manual
2. GANA - Glazing Manual
3. GANA - Laminated Glass Design Guide.

E. National Fire Protection Association:
1. NFPA 80 - Standard for Fire Doors, Fire Windows.

F. Underwriters Laboratories Inc.:
1. UL - Building Materials Directory.

1.3 PERFORMANCE REQUIREMENTS

A. Provide glass and glazing materials for continuity of building enclosure vapor retarder and air barrier:
1. In conjunction with materials described in Section 07900.
2. To utilize inner pane of multiple pane sealed units for continuity of air barrier and vapor retarder seal.
3. To maintain continuous air barrier and vapor retarder throughout glazed assembly from glass pane to heel bead of glazing sealant.

B. Size glass to withstand dead loads and positive and negative live loads acting normal to plane of glass as calculated in accordance with applicable code, as measured in accordance with ASTM E330 and as calculated in accordance with ASCE 7 - Calculation of Wind Loads.
1. Not less than wind loads applicable to Project as required by ASCE 7 "Minimum Design Loads for Buildings and Other Structures":
2. Design per local code requirements for wind loads.

C. Limit glass deflection to 1/200 or flexure limit of glass with full recovery of glazing materials, whichever is less.

1.4 SUBMITTALS

A. Section 01330 - Submittal Procedures: Submittal procedures.

B. Product Data:
1. Glass: Provide structural, physical and environmental characteristics, size limitations, special handling or installation requirements.

2. Glazing Sealants, Compounds and Accessories: Provide chemical, functional, and environmental characteristics, limitations, special application requirements. Identify available colors where exposed.

C. Samples:
1. Glass: Submit two samples 12 x 12 inch in size, illustrating each glass units, coloration.
2. Glazing Materials: Submit 6 inch long bead of glazing sealant and gaskets, color as selected.

D. Certificates: Certify products meet or exceed specified requirements.

E. Manufacturer's Certificate: Certify sealed insulated glass, meets or exceeds specified requirements.

F. Qualification Data: For Installers.

G. Product Test Reports: For each of the following types of glazing products:
1. Tinted float glass
2. Coated float glass
3. Insulating glass
4. Glazing gaskets.

H. Warranties: Special warranties specified in this Section.

1.5 QUALITY ASSURANCE

A. Perform Work in accordance with GANA Glazing Manual, GANA Sealant Manual, for glazing installation methods.

B. Installer Qualifications: An experienced Installer who has completed glazing similar in material, design, and extent to that indicated for this Project; whose work has resulted in glass installations with a record of successful in-service performance; and who employs glass Installers for this Project who are certified under the National Glass Association's Certified Glass Installer Program.

C. Source Limitations for Glazing Accessories: Obtain glazing accessories through one source from a single Manufacturer for each product and installation method indicated.

D. Insulating-Glass Certification Program: Permanently marked either on spacers or on at least one component lite of units with appropriate certification label of the following testing and inspecting agency:
1. Insulating Glass Certification Council.

E. Maintain one copy of each document on site.

1.6 QUALIFICATIONS

A. Installer: Company specializing in performing Work of this section with minimum three years documented experience approved by Manufacturer.

1.7 PRE-INSTALLATION MEETING

A. Section 01300 - Administrative Requirements: Preinstallation meeting.

B. Convene minimum one week before starting Work of this section.

1.8 DELIVERY, STORAGE, AND HANDLING

A. Protect glazing materials according to Manufacturer's written instructions and as needed to prevent damage to glass and glazing materials from condensation, temperature changes, direct exposure to sun, or other causes.

B. For insulating-glass units that will be exposed to substantial altitude changes, comply with insulating-glass Manufacturer's written recommendations for venting and sealing to avoid hermetic seal ruptures.

1.9 ENVIRONMENTAL REQUIREMENTS

A. Section 01600 - Product Requirements.

B. Do not install glazing when ambient temperature is less than 50 degrees F.

C. Environmental Limitations: Do not proceed with glazing when ambient and substrate temperature conditions are outside limits permitted by glazing material Manufacturers and when glazing channel substrates are wet from rain, frost, condensation, or other causes.

D. Maintain minimum ambient temperature before, during and 24 hours after installation of glazing compounds.

1.10 WARRANTY

A. Section 01700 - Execution Requirements: Product warranties and product bonds.

B. Furnish ten year warranty to include coverage for sealed glass units from seal failure, interpane dusting or misting, and replacement of same.

C. Furnish ten year warranty to include coverage for delamination of laminated glass and replacement of same.

1.11 EXTRA MATERIALS

A. Section 01700 - Execution Requirements: Spare parts and maintenance products.

B. Supply two of each insulated glass units for windows.

PART 2 - PRODUCTS

2.1 GLAZING

A. Manufacturers:
1. Substitutions: Section 01600 - Product Requirements.

B. Sealed Insulating Glass Manufacturers:
1. Substitutions: Section 01600 - Product Requirements.

2.2 COMPONENTS

A. Flat Glass (Type FG): Minimum 1/4 inch unless otherwise indicated.
1. Clear Float Glass (Type FG-CF): ASTM C1036, Type 1 transparent flat, Class 1 clear, Quality q3 glazing select
2. Clear Heat Strengthened Glass (Type FG-CH): ASTM C1048, Kind HS, heat strengthened, Condition A uncoated, Type 1 transparent flat, Class 1 clear, Quality q3 glazing select
3. Tinted Float Glass (Type FG-TF): ASTM C1036, Type 1 transparent flat, Class 2 tinted heat-absorbing and light reducing, Quality q3 glazing select
4. Tinted Heat Strengthen Glass (Type FG-TH): ASTM C1048, Kind HS heat strengthened, Condition A uncoated, Type 1 transparent flat, Class 2 tinted heat-absorbing and light reducing, Quality q3 glazing select
5. Low E Clear Float Glass (Type FG-EC): Clear float glass Type FG-CF, with low emissivity coating on inner surface
6. Low E Clear Heat Strengthened Glass (Type FG-EHC): Clear heat strengthened glass Type FG-CH, with low emissivity coating on inner Number 2 surface
7. Low E Tinted Heat Strengthened Glass (Type FG-EHT): Tinted heat strengthened glass Type FG-TH, with low emissivity coating on inner surface.

B. Safety Glass (Type SG): Conform to ANSI Z97.1, minimum thickness 1/4 inch unless otherwise indicated.
1. Clear Tempered Glass (Type SG-CT): ASTM C1048, Kind FT Fully tempered, Condition A, uncoated, Type 1 transparent flat, Class 1 clear, Quality q3 glazing select
2. Tinted Tempered Glass (Type FG-TT): ASTM C1048, Kind FT Fully tempered, Condition A, uncoated, Type 1 transparent flat, Class 2 tinted heat-absorbing and light reducing, Quality q3 glazing select
a. Tint: Blue-Green.

C. Fire Resistive Glass (Type FRG): Glazing materials to by types approved for use with specified materials in fire rated applications. Minimum 1/4 inch thick unless otherwise indicated.
1. Fire-Resistive Gel-Filled Safety Glazing (Type FRG-GC): Transparent fire-resistive safety glazing.

a. Fire Rating: 20 minute rating as listed in UL Building Materials Directory and approved by applicable authorities
b. Thickness: Manufacturer's standard for applications indicated
c. Safety Glazing: Comply with ANSI Z97.1.

D. Solar-Control Low-E Insulating-Glass Units IG-1:
1. Basis-of-Design Product: Sungate 500(3) Low-E Glass Azuria by PPG Industries, Inc. or approved equivalent:
a. Overall Unit Thickness and Thickness of Each Lite: 1inch total with ¼" inch lite
b. Interspace Content: Dry Hermetic Air
c. Outdoor Lite: Azuria Class 2 (tinted) float glass by PPG Industries, Inc.
1) Tint Color: "Sungate" (Blue-Green)
2) Kind HS (heat strengthened) of Kind FT (fully tempered).
d. Indoor Lite: Class 1 (clear**)** float glass.
1) Annealed or Kind FT (fully tempered).
2. Low-E Coating: Sputtered on third surface
3. Visible Light Transmittance: 57 percent
4. Winter Nighttime U-Factor: 0.35
5. Summer Daytime U-Factor: 0.35
6. Solar Heat Gain Coefficient: 0.46
7. Outdoor Visible Reflectance: 12 percent
8. Shading Coefficient: 0.40
9. Insulated Glass Unit Edge Seal Construction: Aluminum, bent and soldered corners
10. Spacer Specifications: Manufacturer's standard spacer material and construction complying with the following requirements:
a. Spacer Material: Aluminum with mill or clear anodic finish
b. Desiccant: Molecular sieve or silica gel, or blend of both
c. Corner Construction: Manufacturer's standard corner construction.

2.3 ACCESSORIES

A. Elastomeric Glazing Sealants: Materials compatible with adjacent materials including glass, insulating glass seals, and glazing channels.
1. Silicone Glazing Sealant: ASTM C920, Type S, Grade NS, Class and Use suitable for glazing application indicated; single component; solvent curing; capable of water immersion without loss of properties; non-bleeding, non-staining, cured Shore A hardness of 15 to 25.
a. Color: As Selected from Manufacturers' standard
b. Structural Silicone: Furnish high-modulus structural silicone glazing materials where sealant bonds glass to substrate.
2. Polysulfide Glazing Sealant: ASTM C920, Type M, Grade NS, Class and Use suitable for glazing application indicated; two component; chemical curing, non-sagging type; cured Shore A hardness of 15 to 25.
a. Color: As Selected from Manufacturers' standard.
3. Polyurethane Glazing Sealant: ASTM C920, Type S, Grade NS, Class and Use suitable for glazing application indicated; single component, chemical curing, non-staining, non-bleeding, Shore A Hardness Range 20 to 35.

a. Color: As Selected from Manufacturers' standard.

4. Acrylic Sealant: ASTM C920, Type S, Grade NS, Class and Use suitable for glazing application indicated; single component, solvent curing, non-bleeding; cured Shore A hardness of 15 to 25.
   a. Color: As Selected from Manufacturers standard

B. Glazing Gaskets: ASTM C864, resilient neoprene, silicone, polyvinyl chloride extruded shape to suit glazing channel retaining slot.
1. Type: per glass Manufacturer recommendation
2. Color: As Selected from Manufacturers standard.

C. Pre-Formed Glazing Tape: Size to suit application.
1. Preformed butyl compound with integral resilient tube spacing device; 10 to 15 Shore A durometer hardness; coiled on release paper; black color.
   a. Type: per glass Manufacturer recommendation
   b. Butyl Corner Sealant: ASTM C920 single component non-skinning butyl compatible with glazing tape; color to match tape.
2. Glazing Tape: Closed cell polyvinyl chloride foam, coiled on release paper over adhesive on two sides, maximum water absorption by volume of 2 percent, designed for compression of 25 percent to effect an air barrier and vapor retarder seal.
   a. Type: per glass Manufacturer recommendation.

D. Setting Blocks: ASTM C864, EPDM, 80 to 90 Shore A durometer hardness, length of 0.1 inch for each square foot of glazing or minimum 4-inch x width of glazing rabbet space minus 1/16 inch x height to suit glazing method and pane weight and area.

E. Spacer Shims: ASTM C864, Neoprene, 50 to 60 Shore A durometer hardness, minimum 3 inch long x one half the height of glazing stop x thickness to suit application , self adhesive on one face.

F. Plastic Film: Low emissivity film.

2.4 SOURCE QUALITY CONTROL AND TESTS

A. Provide analysis of glass to Section 01400.

B. Provide shop inspection for safety and insulated glass.

C. Comply with ANSI Z97.1, ASTM E773, ASTM E546, and ASTM E576.

PART 3 - EXECUTION

3.1 EXAMINATION

A. Section 01300 - Administrative Requirements: Coordination and project conditions.

B. Verify openings for glazing are correctly sized and within acceptable tolerance.

C. Verify surfaces of glazing channels or recesses are clean, free of obstructions impeding moisture movement, weeps are clear, and ready to receive glazing.

D. Examine framing glazing, with Installer present, for compliance with the following:
   1. Manufacturing and installation tolerances, including those for size, squareness, and offsets at corners
   2. Presence and functioning of weep system
   3. Minimum required face or edge clearances
   4. Effective sealing between joints of glass-framing members.

E. Proceed with installation only after unsatisfactory conditions have been corrected.

3.2 PREPARATION

A. Clean contact surfaces with solvent and wipe dry.

B. Seal porous glazing channels or recesses with substrate compatible primer or sealer.

C. Prime surfaces scheduled to receive sealant.

3.3 INSTALLATION GLAZING, GENERAL

A. Perform installation in accordance with GANA Glazing Manual.
   1. Glazing Sealants: Comply with ASTM C1193.
   2. Fire Rated Openings: Comply with NFPA 80

B. Comply with combined written instructions of Manufacturers of glass, sealants, gaskets, and other glazing materials, unless more stringent requirements are indicated, including those in referenced glazing publications.

C. Glazing channel dimensions, provide necessary bite on glass, minimum edge and face clearances, and adequate sealant thicknesses, with reasonable tolerances. Adjust as required by Project conditions during installation.

D. Protect glass edges from damage during handling and installation. Remove damaged glass from Project site and legally dispose of off Project site. Damaged glass is glass with edge damage or other imperfections that, when installed, could weaken glass and impair performance and appearance.

E. Install setting blocks in sill rabbets, sized and located to comply with referenced glazing publications, unless otherwise required by glass Manufacturer. Set blocks in thin course of compatible sealant suitable for heel bead.

F. Do not exceed edge pressures stipulated by glass Manufacturers for installing glass lites.

G. Provide spacers for glass lites where length plus width is larger than 50 inches as follows:
   1. Locate spacers directly opposite each other on both inside and outside faces of glass. Install correct size and spacing to preserve required face clearances, unless

gaskets and glazing tapes are used that have demonstrated ability to maintain required face clearances and to comply with system performance requirements.

2. Provide 1/8-inch minimum bite of spacers on glass and use thickness equal to sealant width. With glazing tape, use thickness slightly less than final compressed thickness of tape.

H. Provide edge blocking where indicated or needed to prevent glass lites from moving sideways in glazing channel, as recommended in writing by glass Manufacturer and according to requirements in referenced glazing publications.

I. Set glass lites in each series with uniform pattern, draw, bow, and similar characteristics.

J. Where wedge-shaped gaskets are driven into one side of channel to pressurize sealant or gasket on opposite side, provide adequate anchorage so gasket cannot walk out when installation is subjected to movement.

K. Square cut wedge-shaped gaskets at corners and install gaskets in a manner recommended by gasket Manufacturer to prevent corners from pulling away; seal corner joints and butt joints with sealant recommended by gasket Manufacturer.

3.4 TAPE GLAZING

A. Position tapes on fixed stops so that, when compressed by glass, their exposed edges are flush with or protrude slightly above sightline of stops.

B. Install tapes continuously, but not necessarily in one continuous length. Do not stretch tapes to make them fit opening.

C. Cover vertical framing joints by applying tapes to heads and sills first and then to jambs. Cover horizontal framing joints by applying tapes to jambs and then to heads and sills.

D. Place joints in tapes at corners of opening with adjoining lengths butted together, not lapped. Seal joints in tapes with compatible sealant approved by tape Manufacturer.

E. Do not remove release paper from tape until just before each glazing unit is installed.

F. Apply heel bead of elastomeric sealant where indicated.

G. Center glass lites in openings on setting blocks and press firmly against tape by inserting dense compression gaskets formed and installed to lock in place against faces of removable stops. Start gasket applications at corners and work toward centers of openings.

H. Apply cap bead of elastomeric sealant over exposed edge of tape.

3.5 GASKET GLAZING (DRY)

A. Fabricate compression gaskets in lengths recommended by gasket Manufacturer to fit openings exactly, with allowance for stretch during installation.

B. Center glass lites in openings on setting blocks and press firmly against soft compression gasket by inserting dense compression gaskets formed and installed to lock in place against faces of removable stops. Start gasket applications at corners and work toward centers of openings. Compress gaskets to produce a weathertight seal without developing bending stresses in glass. Seal gasket joints with sealant recommended by gasket Manufacturer.

C. Install gaskets so they protrude past face of glazing stops.

3.6 FIELD QUALITY CONTROL

A. Section 01400 - Quality Requirements: Testing and Inspection Services and 01700 - Execution Requirements: Testing, adjusting, and balancing.

B. Monitor quality of glazing.

3.7 CLEANING

A. Section 01700 - Execution Requirements: Final cleaning.

B. Remove glazing materials from finish surfaces.

C. Remove labels after Work is complete.

D. Clean glass and adjacent surfaces.

3.8 PROTECTION OF INSTALLED CONSTRUCTION

A. Section 01700 - Execution Requirements: Protecting installed construction.

B. Protect exterior glass from damage immediately after installation by attaching crossed streamers to framing held away from glass. Do not apply markers to glass surface. Remove nonpermanent labels, and clean surfaces.

C. Protect glass from contact with contaminating substances resulting from construction operations.

D. Remove and replace glass that is broken, chipped, cracked, or abraded or that is damaged from natural causes, accidents, and vandalism, during construction period.

E. Wash glass on both exposed surfaces in each area of Project not more than four days before date scheduled for inspections that establish date of Substantial Completion. Wash glass as recommended in writing by glass Manufacturer.

3.9 SCHEDULE

A. Glazing Schedule:
1. Aluminum Windows: 1-inch (25-mm) thick insulating unit tinted glass.
2. Storefront: 1-inch (25-mm) thick insulating unit, tinted tempered glass.
3. Entrances: 1-inch (16-mm) thick insulating unit, tinted tempered glass.
4. Mirrors: 1/4-inch (6-mm) plate glass.
5. Doors: Tempered glass.

END OF SECTION

SECTION 09111

NON-LOAD-BEARING METAL FRAMING SYSTEM

PART 1 - GENERAL

1.1 SUMMARY

A. Section includes metal stud framing and accessories at interior and exterior locations.

B. Related Sections:
1. Section 05400 - Cold-Formed Metal Framing: Structural load bearing metal stud framing
2. Section 06114 - Wood Blocking and Curbing: Rough wood blocking within stud framing
3. Section 07260 - Vapor Retarders
4. Section 07270 - Air Barriers
5. Section 07213 - Batt Insulation: Insulation between framing members
6. Section 09260 - Gypsum Board Assemblies: Metal studs for partitioning.

1.2 REFERENCES

A. ASTM International:
1. ASTM A123/A123M - Standard Specification for Zinc (Hot-Dip Galvanized) Coatings on Iron and Steel Products
2. ASTM A591/A591M - Standard Specification for Steel Sheet, Electrolytic Zinc-Coated, for Light Coating Mass Applications
3. ASTM A653/A653M - Standard Specification for Steel Sheet, Zinc-Coated (Galvanized) or Zinc-Iron Alloy-Coated (Galvannealed) by the Hot-Dip Process
4. ASTM C645 - Standard Specification for Nonstructural Steel Framing Members
5. ASTM C754 - Standard Specification for Installation of Steel Framing Members to Receive Screw-Attached Gypsum Panel Products
6. ASTM C1002 - Standard Specification for Steel Drill Screws for the Application of Gypsum Panel Products or Metal Plaster Bases.

B. National Association of Architectural Metal Manufacturers:
1. NAAMM ML/SFA 540 - Lightweight Steel Framing Systems Manual.

C. SSPC: The Society for Protective Coatings:
1. SSPC Paint 20 - Zinc-Rich Primers (Type I - Inorganic and Type II - Organic).

1.3 SYSTEM DESCRIPTION

A. Exterior Wall: Metal stud framing system infill, with exterior sheathing specified in Section 09260, batt insulation specified in Section 07213, interior gypsum board specified in Section 09260.

B. Exterior Loads: Design and size components to withstand loads caused by positive and negative pressure of wind acting normal to plane of wall as calculated in accordance with building code.

C. Interior Walls: Metal stud framing system with batt type acoustic insulation specified in Section 07213, interior gypsum board specified in Section 09260.

D. Maximum Allowable Deflection: 1: 180 span for interior painted walls; L/720 span for exterior masonry and stucco back-up; L/360 for ceramic tile wall back up.

E. Wall System:
1. Design to provide for movement of components without damage, failure of joint seals, undue stress on fasteners, or other detrimental effects when subject to seasonal or cyclic day/night temperature ranges.
2. Design system to accommodate construction tolerances, deflection of building structural members, and clearances of intended openings.

1.4 SUBMITTALS

A. Section 01330 - Submittal Procedures: Submittal procedures.

B. Shop Drawings:
1. Indicate component details, stud layout, framed openings, anchorage to structure, type and location of fasteners, and accessories or items required of other related work.
2. Describe method for securing studs to tracks, and for blocking and reinforcement to framing connections.

C. Product Data: Submit data describing standard framing member materials and finish, product criteria, load charts, and limitations.

D. Manufacturer's Installation Instructions: Submit special procedures and perimeter conditions requiring special attention.

1.5 QUALITY ASSURANCE

A. Perform Work in accordance with ASTM C754.

B. Form, fabricate, install, and connect components in accordance with NAAMM ML/SFA 540.

C. Furnish framing materials in accordance with SSMA - Product Technical Information.

D. Maintain one copy of each document on site.

1.6 QUALIFICATIONS

A. Manufacturer: Company specializing in manufacturing products specified in this section with minimum three years documented experience.
1. Framing Manufacturer: Current member of Steel Stud Manufacturers Association.

B. Installer: Company specializing in performing Work of this section with minimum three years documented experience.

C. Design structural elements under direct supervision of Professional Engineer experienced in design of this Work and licensed in State of Texas.

1.7 MOCKUP

A. Section 01400 - Quality Requirements: Requirements for mockup.

B. Construct corner mockup, 10’ x 10’ x 10’, including stud wall framing including insulation, sheathing, window frame, and interior and exterior finish specified in other sections. Coordinate with installation of associated work of Sections 05500, 07260, 07260, and 09260.

C. Locate where directed by Architect/Engineer.

D. Incorporate accepted mockup as part of Work.

1.8 PRE-INSTALLATION MEETINGS

A. Section 01300 - Administrative Requirements: Pre-installation meeting.

B. Convene minimum two weeks prior to commencing work of this section.

1.9 COORDINATION

A. Section 01300 - Administrative Requirements: Coordination and project conditions.

B. Coordinate placement of components within stud framing system.

PART 2 - PRODUCTS

2.1 METAL FRAMING SYSTEM

A. Manufacturers:
1. Clark Steel Framing Systems
2. Dale / Incor
3. Dietrich Metal Framing
4. Steel Construction Systems
5. Substitutions: Section 01600 - Product Requirements.

2.2 COMPONENTS

A. Components: ASTM C645.

B. Studs: ASTM A653/A653M, non-load bearing rolled steel, channel shaped, punched for utility access, as follows:
1. Depth: 1-5/8, 2-1/2, 3-5/8, and 6 inches

2. Thickness: 20 gauge, minimal and heavier gauges per Manufacturer requirements for height and loads
3. Refer to structural drawings for additional stud gauges.

C. Runner Tracks: Same material and thickness as studs or heavier, bent leg retainer notched to receive studs.

D. Slip-Type slotted head track: Provide one of the following:
1. Deflection Track: Steel sheet top runner manufactured to prevent cracking of finishes applied to interior partition framing resulting from deflection of structure above; in thickness not less than indicated for studs and in width to accommodate depth of studs.
a. Standard leg 2 ½" with 1 ½" slot
2. Double-Runner System: ASTM C 645 top runners, inside runner with 2-inch-deep flanges in thickness not less than indicated for studs and fastened to studs, and outer runner sized to friction fit inside runner.

E. Furring and Bracing Members: Of same material as studs; thickness to suit purpose.

F. Fasteners: ASTM C1002, self drilling, self tapping screws.

G. Sheet Metal Backing: 1/8" thick cold rolled steel – in wall anchor plates galvanized steel for reinforcement of toilet accessories.

H. Anchorage Devices: Power actuated.

I. Acoustic Sealant: As specified in Section 07900.

J. Touch-Up Primer for Galvanized Surfaces: SSPC-Paint 20 Type II Organic zinc rich.

2.3 SHOP FINISHING

A. Studs, Tracks and Headers: Galvanize to G60 coating class.

B. Accessories: Same finish as framing members, G60 coating class.

PART 3 - EXECUTION

3.1 EXAMINATION

A. Section 01300 - Administrative Requirements: Coordination and project conditions.

B. Verify rough-in utilities are in proper location.

C. Examine areas and substrates, with Installer present, and including welded hollow-metal frames, and structural framing, for compliance with requirements and other conditions affecting performance.
1. Proceed with installation only after unsatisfactory conditions have been corrected.

3.2 INSTALLATION

A. Align and secure top and bottom runners at not more 24 inches oc.

B. Achieve air tight seal between runners and substrate with acoustic sealant in conjunction with Section 07270.

C. Achieve air tight seal between studs and adjacent vertical surfaces with acoustic sealant in conjunction with Section 07270.

D. Fit runners under and above openings; secure intermediate studs to same spacing as wall studs.

E. Install studs vertically at 16 inches oc.

F. Align stud web openings horizontally.

G. Secure studs to tracks using fastener method. Do not weld.

H. Stud splicing not permissible.

I. Fabricate corners using minimum of three studs.

J. Double stud at wall openings, door and window jambs, not more than 2 inches from each side of openings.

K. Brace stud framing system rigid.

L. Coordinate erection of studs with requirements of door frames and window frames; install supports and attachments.

M. Door Openings: Screw vertical studs at jambs to jamb anchor clips on door frames; install runner track section (for cripple studs) at head and secure to jamb studs.
   1. Install two studs at each jamb, unless otherwise indicated.
   2. Extend jamb studs through suspended ceilings and attach to underside of overhead structure.

N. Coordinate installation of wood bucks, anchors, and wood blocking with electrical and mechanical work to be placed within or behind stud framing.

O. Blocking: Secure blocking to studs. Install blocking for support of plumbing fixtures, toilet partitions, wall cabinets, toilet accessories and opening frames.

P. Refer to Drawings for indication of partitions extending to finished ceiling only and for partitions extending through ceiling to structure above. Maintain clearance under structural building members to avoid deflection transfer to studs. Install extended leg ceiling runners.

1. Slip-Type Head Joints: Where framing extends to overhead structural supports, install to produce joints at tops of framing systems that prevent axial loading of finished assemblies.

Q. Coordinate placement of insulation in stud spaces after stud frame erection.

3.3 INSTALLING SUSPENSION SYSTEMS

A. Install suspension system components in sizes and spacings as required, but not less than those required by referenced installation standards for assembly types and other assembly components indicated.

B. Isolate suspension systems from building structure where they abut or are penetrated by building structure to prevent transfer of loading imposed by structural movement.

C. Suspend hangers from building structure as follows:
1. Install hangers plumb and free from contact with insulation or other objects within ceiling plenum that are not part of supporting structural or suspension system.
   a. Splay hangers only where required to miss obstructions and offset resulting horizontal forces by bracing, countersplaying, or other equally effective means.
2. Where width of ducts and other construction within ceiling plenum produces hanger spacings that interfere with locations of hangers required to support standard suspension system members, install supplemental suspension members and hangers in the form of trapezes or equivalent devices.
   a. Size supplemental suspension members and hangers to support ceiling loads within performance limits established by referenced installation standards.
3. Wire Hangers: Secure by looping and wire tying, either directly to structures or to inserts, eye screws, or other devices and fasteners that are secure and appropriate for substrate, and in a manner that will not cause hangers to deteriorate or otherwise fail.
4. Flat Hangers: Secure to structure, including intermediate framing members, by attaching to inserts, eye screws, or other devices and fasteners that are secure and appropriate for structure and hanger, and in a manner that will not cause hangers to deteriorate or otherwise fail.
5. Do not attach hangers to steel roof deck.
6. Do not connect or suspend steel framing from ducts, pipes, or conduit.

3.4 ERECTION TOLERANCES

A. Section 01400 - Quality Requirements: Tolerances.

B. Maximum Variation From Indicated Position: 1/8 inch in 10 feet.

C. Maximum Variation From Plumb: 1/8 inch in 10 feet.

END OF SECTION

SECTION 09260

GYPSUM BOARD ASSEMBLIES

PART 1 - GENERAL

1.1 SUMMARY

A. Section includes gypsum board and joint treatment; gypsum sheathing; cementitious backer board; acoustic insulation; and textured finish.

B. Related Sections:
1. Section 05400 - Cold Formed Metal Framing
2. Section 06114 - Wood Blocking and Curbing: Wood blocking for support of fixtures
3. Section 07213 - Batt Insulation: Acoustic and Thermal insulation
4. Section 08310 - Access Doors and Panels: Metal access panels
5. Section 10800: Product requirements for frames for recessed washroom accessories for placement by this section.

1.2 REFERENCES

A. ASTM International:
1. ASTM C36 - Standard Specification for Gypsum Wallboard
2. ASTM C79/C79M - Standard Specification for Gypsum Sheathing Board
3. ASTM C442 - Standard Specification for Gypsum Backing Board and Coreboard
4. ASTM C475 - Standard Specification for Joint Compound and Joint Tape for Finishing Gypsum Board
5. ASTM C514 - Standard Specification for Nails for the Application of Gypsum Board
6. ASTM C557 - Standard Specification for Adhesives for Fastening Gypsum Wallboard to Wood Framing
7. ASTM C630/C630M - Standard Specification for Water-Resistant Gypsum Backing Board
8. ASTM C645 - Standard Specification for Nonstructural Steel Framing Members
9. ASTM C665 - Standard Specification for Mineral-Fiber Blanket Thermal Insulation for Light Frame Construction and Manufactured Housing
10. ASTM C754 - Standard Specification for Installation of Steel Framing Members to Receive Screw-Attached Gypsum Panel Products
11. ASTM C840 - Standard Specification for Application and Finishing of Gypsum Board
12. ASTM C931/C931M - Standard Specification for Exterior Gypsum Soffit Board
13. ASTM C1002 - Standard Specification for Steel Drill Screws for the Application of Gypsum Panel Products or Metal Plaster Bases
14. ASTM C1280 - Standard Specification for Application of Gypsum Sheathing
15. ASTM E90 - Standard Test Method for Laboratory Measurement of Airborne Sound Transmission Loss of Building Partitions and Elements
16. ASTM E119 - Standard Test Methods for Fire Tests of Building Construction and Materials.

B. Gypsum Association:
   1. GA 214 - Recommended Levels of Gypsum Board Finish
   2. GA 216 - Application and Finishing of Gypsum Board
   3. GA 600 - Fire Resistance Design Manual Sound Control.

C. Underwriters Laboratories Inc.:
   1. UL - Fire Resistance Directory.

D. Intertek Testing Services (Warnock Hersey Listed):
   1. WH - Certification Listings.

1.3 PERFORMANCE REQUIREMENTS

A. Conform to applicable code for fire rated assemblies in conjunction with Section 09111 as follows:
   1. Fire Rated Partitions: Listed assembly by UL
      a. 1 hour wall; UL No. U465
      b. 2 hour wall; UL No. U411
      c. 3 hour wall; UL No. U435.

B. Acoustic Attenuation for Interior Partitions: in accordance with ASTM E90.

1.4 SUBMITTALS

A. Section 01330 - Submittal Procedures: Submittal procedures.

B. Shop Drawings: Indicate special details associated with fireproofing and acoustic seals.

C. Product Data: Submit data on metal framing, gypsum board, joint tape, texture and acoustic accessories.

D. Samples: Submit two samples of gypsum board, 12 x 12 inch in size illustrating finish and texture.

E. Submit Manufacturer's installation instructions under provisions of Section 01340.

F. Coordinate this work with the installation of batt insulation and mechanical and electrical work which is to be placed at or within framing. Allow such items to be installed or incorporated, if required, before start of gypsum board installation.

G. Qualifications Data: For Installer of Gypsum Board products.

1.5 QUALITY ASSURANCE

A. Perform Work in accordance with ASTM C840 and ASTM C1280.

B. Maintain one copy of each document on site.

1.6 QUALIFICATIONS

A. Manufacturer: Company specializing in manufacturing products specified in this section with minimum three years documented experience.

B. Installer: Company specializing in performing Work of this section with minimum three years documented experience.

1.7 DELIVERY, STORAGE AND HANDLING

A. General: Comply with Section 01400 – Quality Requirements

B. Ordering: Comply with Manufacturer's ordering instructions and lead time requirements to avoid construction delays.

C. Packing, Shipping, Handling and Unloading: Per Manufacturer.

D. Delivery: Deliver materials in Manufacturer's original identification labels intact.

E. Storage and Protection: Store materials protected from exposure to harmful weather conditions and at temperature conditions recommended by Manufacturer. Store materials in clean, dry, sheltered area, off ground, until used. Stack panels flat to prevent sagging

1.8 MOCKUP

A. Section 01400 - Quality Requirements: Requirements for mockup.

B. Construct mock-up, including interior wall and ceiling system illustrating surface finish and texture.

C. Locate where directed by Architect/Engineer.

D. Incorporate accepted mockup as part of Work.

1.9 PRE-INSTALLATION MEETINGS

A. Section 01300 - Administrative Requirements: Pre-installation meeting.

B. Convene minimum two weeks prior to commencing work of this section.

PART 2 - PRODUCTS

2.1 GYPSUM BOARD ASSEMBLIES

A. Manufacturers:
1. Celotex Building Products
2. G-P Gypsum Corp.
3. National Gypsum Co.
4. United States Gypsum Co.
5. Substitutions: Section 01600 - Product Requirements.

2.2 COMPONENTS

A. Framing Materials:
1. Studs and Tracks: Per Section 09110
2. Furring, Framing, and Accessories: Specified in Section 09110
3. Fasteners: ASTM C1002
4. Anchorage to Substrate: Tie wire, screws, and other metal supports, of type and size to suit application; to rigidly secure materials in place.

B. Gypsum Board Materials:
1. Fire Rated Gypsum Board: ASTM C36; fire resistive type, UL or WH rated; 5/8 inch thick, maximum available length in place; ends square cut, tapered and beveled edges.
2. Moisture Resistant Gypsum Board: Fire Resistive Type, ASTM C630/C630M; 5/8 inch thick, maximum available length in place; ends square cut, tapered and beveled edges, square edges behind tile.
3. FIBEROCK® Brand Aqua-Tough™ Interior Panels
4. FIBEROCK® Brand VHI Abuse-Resistant Fiber-Reinforced Gypsum Interior Panels
5. Gypsum Backing Board: ASTM C442; fire rated type; 1/2 inch thick; V-grooved edges, ends square cut, maximum available size in place.
6. Gypsum Sheathing Board: ASTM C79/C79M; moisture resistant and fire resistant type; 5/8 inch thick, maximum available size in place; ends square cut, tongue and grooved edges; water repellent paper faces.
7. Cementitious Backing Board: ANSI A118.9; High density, glass fiber reinforced, ½ inch thick;
8. 2 inch wide, coated glass fiber tape for joints and corners.

2.3 ACCESSORIES

A. Acoustic Insulation: ASTM C665; See Section 07900

B. Acoustic Sealant: Non-hardening, non-skinning, for use in conjunction with gypsum board.

C. Interior Trim: ASTM C 1047.
1. Material: Galvanized or aluminum-coated steel sheet or rolled zinc.
2. Shapes:
   a. Cornerbead
   b. U-Bead: J-shaped; L-Bead; exposed short flange does not receive joint compound
   c. Expansion (control) joint.

D. Joint Materials: ASTM C475; reinforcing tape, joint compound, adhesive, and water. For each coat use formulation that is compatible with other compounds applied on previous or for successive coats.
1. Prefilling: At open joints and damaged surface areas, use setting-type taping compound.
2. Embedding and First Coat: For embedding tape and first coat on joints, fasteners, and trim flanges, use drying-type, all-purpose compound.

3. Fill Coat: For second coat, use drying-type, all-purpose compound.
4. Finish Coat: For third coat, use drying-type, all-purpose compound.

E. Textured Finish Materials: Latex based texturing material, containing fine aggregate, low / no V.O.C. type.

F. Fasteners: ASTM C1002, Type S12.

PART 3 - EXECUTION

3.1 EXAMINATION

A. Section 01300 - Administrative Requirements: Coordination and project conditions.

B. Verify site conditions are ready to receive work and opening dimensions are as instructed by Manufacturer.

3.2 INSTALLATION

A. Metal Stud Installation:
1. Install studs in accordance with ASTM C754.
2. Metal Stud Spacing: 16 inches on center.
3. Refer to Drawings for indication of partitions extending stud framing through ceiling to structure above. Maintain clearance under structural building members to avoid deflection transfer to studs. Provide extended leg ceiling runners.
4. Door Opening Framing: Install double studs at door frame jambs. Install stud tracks on each side of opening, at frame head height, and between studs and adjacent studs. Install control joints at door head.
5. Blocking: Bolt or screw steel channels to studs. Install blocking for support of plumbing fixtures, toilet partitions, wall cabinets, and toilet accessories.

B. Ceiling Framing Installation:
1. Install in accordance with ASTM C754.
2. Coordinate location of hangers with other work.
3. Install ceiling framing independent of walls, columns, and above ceiling work.
4. Reinforce openings in ceiling suspension system which interrupt main carrying channels or furring channels, with lateral channel bracing. Extend bracing minimum 24 inches past each end of openings.
5. Laterally brace entire suspension system.

C. Acoustic Accessories Installation:
1. Place acoustic insulation in partitions tight within spaces, around cut openings, behind and around electrical and mechanical items within or behind partitions, and tight to items passing through partitions.
2. Install acoustic sealant within partitions.

D. Gypsum Board Installation:
1. Install gypsum board in accordance with GA-216 and GA-600.

2. Erect single layer standard gypsum board in most economical direction, with ends and edges occurring over firm bearing.
3. Erect single layer fire rated gypsum board vertically, with edges and ends occurring over firm bearing.
4. Erect exterior gypsum sheathing in accordance with ASTM C1280, horizontally, with edges butted and ends occurring over firm bearing.
5. Use screws when fastening gypsum board to metal furring or framing.
6. Double Layer Applications: Secure second layer to first with fasteners. Place second layer perpendicular to first layer. Offset joints of second layer from joints of first layer.
7. Erect exterior gypsum soffit board perpendicular to supports, with staggered end joints over supports.
8. Treat cut edges and holes in moisture resistant gypsum board with sealant.
9. Place control joints consistent with lines of building spaces as required by gypsum board Manufacturer requirements.
10. Place corner beads at external corners. Use longest practical length. Place edge trim where gypsum board abuts dissimilar materials.
11. Install cementitious backing board over metal studs.

E. Joint Treatment:
1. Finish in accordance with GA-214 Level 4. Erect in accordance with Manufacturer's instructions.
2. Tape, fill, and sand exposed joints, edges, and corners to produce smooth surface ready to receive finishes.
3. Feather coats on to adjoining surfaces so that camber is maximum 1/32 inch.
4. Taping, filling, and sanding is not required at surfaces behind adhesive applied ceramic tile.

F. Texture Finish: Spray apply finish texture coating, light sand to orange peel finish.

3.3 ERECTION TOLERANCES

A. Section 01400 - Quality Requirements: Tolerances.

B. Maximum Variation of Finished Gypsum Board Surface from Flat Surface: 1/8 inch in 10 feet.

END OF SECTION

SECTION 09300

TILE

PART 1 - GENERAL

1.1 SUMMARY

A. Section includes ceramic tile for floor and wall applications; cementitious backer board as tile substrate; thresholds at door openings; and ceramic accessories.

B. Related Sections:
1. Section 03350 - Concrete Finishing: Troweling of floor slab for tile application
2. Section 07900 - Joint Sealers
3. Section 15410 - Plumbing Fixtures: Shower receptor.

1.2 REFERENCES

A. American National Standards Institute:
1. ANSI A108.1 - Installation of Ceramic Tile, A collection
2. ANSI A108.10 - Specifications for Installation of Grout in Tilework
3. ANSI A108.1A - Specifications for Installation of Ceramic Tile in the Wet-Set Method with Portland Cement Mortar
4. ANSI A108.1B - Specifications for Installation of Ceramic Tile on a Cured Portland Cement Mortar Setting Bed with Dry-Set or Latex Portland Cement Mortar
5. ANSI A108.1C - Specifications for Contractors Option: Installation of Ceramic Tile in the Wet-Set Method with Portland Cement Mortar -or- Installation of Ceramic Tile on a Cured Portland Cement Mortar Setting Bed with Dry-Set or Latex Portland Cement Mortar
6. ANSI A108.4 - Specifications for Ceramic Tile Installed with Organic Adhesives or Water-Cleanable Tile Setting Epoxy Adhesive
7. ANSI A108.5 - Specifications for Ceramic Tile Installed with Dry-Set Portland Cement Mortar or Latex-Portland Cement Mortar
8. ANSI A118.1 - Standard Specification for Dry-Set Portland Cement Mortar
9. ANSI A118.4 - Latex-Portland Cement Mortar
10. ANSI A118.6 - Ceramic Tile Grouts
11. ANSI A118.8 - Modified Epoxy Emulsion Mortar/Grout
12. ANSI A118.9 - Test Methods and Specifications for Cementitious Backer Units
13. ANSI A136.1 - Organic Adhesives for Installation of Ceramic Tile
14. ANSI A137.1 - Ceramic Tile.

B. Tile Council of America:
1. TCA - Handbook for Ceramic Tile Installation.

1.3 SUBMITTALS

A. Section 01330 - Submittal Procedures: Submittal procedures.

B. Shop Drawings: Indicate tile layout, patterns, color arrangement, perimeter conditions, junctions with dissimilar materials, control and expansion joints, thresholds, ceramic accessories, and setting details.

C. Samples for Initial Selection: For each type of tile and grout indicated. Include Samples of accessories involving color selection.

D. Product Data: Submit instructions for using grouts and adhesives.

E. Samples for Verification:
1. Full-size units of each type and composition of tile and for each color and finish required.
2. Stone thresholds in 6-inch lengths.

F. Samples: Submit mounted tile and grout on one plywood panels, illustrating pattern, color variations, and grout joint size variations.

G. Manufacturer's Certificate: Certify Products meet or exceed specified requirements.

H. Qualifications Data: For Installer of Tile products.

1.4 CLOSEOUT SUBMITTALS

A. Section 01700 - Execution Requirements: Closeout procedures.

B. Operation and Maintenance Data: Submit recommended cleaning methods, cleaning materials, stain removal methods, and polishes and waxes.

1.5 QUALITY ASSURANCE

A. Perform Work in accordance with TCA Handbook and ANSI A108 Series/A118 Series.

B. Source Limitations for Tile: Obtain all tile of same type and color or finish from one source or producer.

C. Obtain tile from same production run and of consistent quality in appearance and physical properties for each contiguous area.

D. Source Limitations for Setting and Grouting Materials: Obtain ingredients of a uniform quality for each mortar, adhesive, and grout component from a single Manufacturer and each aggregate from one source or producer.

E. Source Limitations for Other Products: Obtain each of the following products specified in this Section through one source from a single Manufacturer for each product:
1. Stone thresholds
2. Waterproofing
3. Joint sealants.

F. Maintain one copy of each document on site.

1.6 QUALIFICATIONS

A. Manufacturer: Company specializing in manufacturing products specified in this section with minimum three years documented experience.

B. Installer: Company specializing in performing Work of this section with minimum three years documented experience.

1.7 MOCKUP

A. Section 01400 - Quality Requirements: Requirements for mockup.

B. Construct tile mock-up, 4 feet long by 4 feet wide, with finish grout, and specified accessories.

C. Locate where directed by Architect/Engineer.

D. Incorporate accepted mockup as part of Work.

1.8 PRE-INSTALLATION MEETINGS

A. Section 01300 - Administrative Requirements: Pre-installation meeting.

B. Convene minimum two weeks prior to commencing work of this section.

1.9 DELIVERY, STORAGE, AND HANDLING

A. Section 01600 - Product Requirements: Product storage and handling requirements.

B. Protect adhesives and grouts from freezing or overheating.

C. Deliver and store packaged materials in original containers with seals unbroken and labels intact until time of use. Comply with requirement in ANSI A137.1 for labeling sealed tile packages.

D. Store tile and cementitious materials on elevated platforms, under cover, and in a dry location.

E. Store aggregates where grading and other required characteristics can be maintained and contamination avoided.

F. Store liquid latexes in unopened containers and protected from freezing.

G. Handle tile that has temporary protective coating on exposed surfaces to prevent coated surfaces from contacting backs or edges of other units. If coating does contact bonding surfaces of tile, remove coating from bonding surfaces before setting tile.

1.10 ENVIRONMENTAL REQUIREMENTS

A. Section 01600 - Product Requirements.

B. Do not install adhesives and grouts in unventilated environment.

C. Maintain ambient and substrate temperature of 50 degrees F during installation of mortar materials.

1.11 EXTRA MATERIALS

A. Section 01700 - Execution Requirements: Spare parts and maintenance products.

B. Furnish extra materials described below that match products installed and that are packaged with protective covering for storage and identified with labels describing contents.
1. Tile and Trim Units: Furnish quantity of full-size units equal to 3 percent of amount installed, for each type, composition, color, pattern, and size indicated.

PART 2 - PRODUCTS

2.1 TILE

A. Static Coefficient of Friction: For tile installed on walkway surfaces, provide products with the following values as determined by testing identical products per ASTM C 1028:
1. Level Surfaces: Minimum 0.6.

B. Manufacturers:
1. American Olean Tile Co.
2. Dal-Tile International
3. United States Ceramic Tile
4. Substitutions: Section 01600 - Product Requirements.

2.2 COMPONENTS

A. Ceramic Tile: ANSI A137.1, conforming to the following:
1. Moisture Absorption: 0 to 0.5 percent
2. Size: 2 x 2 x ¼ inch
3. Shape: Square
4. Edge: Cushioned
5. Surface Finish: Unglazed, Slip resistant
6. Color: As selected from Manufacturers standard, Price group 1 and 2
7. Pattern: submit pattern

B. Ceramic Wall Tile: ANSI A137.1, conforming to the following:
1. Moisture Absorption: 0.5 to 3.0 percent
2. Size: 4 x 4 x 5/16 inch
3. Shape: Square
4. Edge: Cushioned
5. Internal Corner: Coved
6. External Corner: Bull nosed
7. Surface Finish: Matte glazed
8. Color: As selected from Manufacturers standard, Price group 1 and 2

9. Pattern: 3 colors, submit pattern.

C. Base: Match floor tile for moisture absorption, surface finish, and color:
1. Length: 4 inch
2. Height: 4 inch
3. Top Edge: Cushioned
4. Internal Corner: Cove
5. External Corner: Bull nosed
6. Color: As selected from Manufacturers standard, Price group 1 and 2
7. Pattern: submit pattern.

D. Wainscot Cap: Match wall tile for moisture absorption, surface finish, and color, 4 x 8 inch, bull nosed top edge.

2.3 ACCESSORIES

A. Adhesive Materials:
1. Organic Adhesive: ANSI A136.1, thin-set bond type
   a. Type I Moisture Resistant
2. Epoxy Adhesive: ANSI A118.3, thin-set bond type
3. Tile Setting Adhesive: Elastomeric, waterproof, and liquid applied.

B. Mortar Materials:
1. Mortar Bed Materials: Portland cement, sand, latex additive, and water.
2. Mortar Bond Coat Materials:
   a. Latex-Portland Cement type: exceeds ANSI A118.4
   b. Prepackaged dry-mortar mix containing dry, redispersible, ethylene vinyl acetate additive to which only water must be added at Project site
   c. For wall applications, provide nonsagging mortar that complies with Paragraph F-4.6.1 in addition to the other requirements in ANSI A118.4.

C. Grout Materials: Polymer-Modified Tile Grout: ANSI A118.7, color as selected from Manufacturers' standard range.
1. Fortified Polymer Type: Ethylene vinyl acetate, in dry, redispersible form, prepackaged with other dry ingredients.
   a. Unsanded grout mixture for joints 1/8 inch and narrower
   b. Sanded grout mixture for joints 1/8 inch and wider.

D. Cleavage Membrane: 4 mil thick polyethylene film.

E. Reinforcing Mesh: 2 x 2 inch size weave of 16/16 wire size; welded fabric, galvanized.

F. Cementitious Backer Board: See section 09260.

G. Thresholds: Marble type, honed finish, size by full width of wall or frame opening, beveled both sides, radiused edges from bevel to vertical face.
1. Fabricate to sizes and profiles as required to provide transition between adjacent floor finishes.

2. Bevel edges at 1:2 slope, aligning lower edge of bevel with adjacent floor finish. Limit height of bevel to 1/2 inch or less, and finish bevel to match face of threshold.
3. Description: Uniform, fine- to medium-grained white stone with gray veining.

PART 3 - EXECUTION

3.1 EXAMINATION

A. Section 01300 - Administrative Requirements: Coordination and project conditions.

B. Verify surfaces are ready to receive work.

C. Examine substrates, areas, and conditions where tile will be installed, with Installer present, for compliance with requirements for installation tolerances and other conditions affecting performance of installed tile.
1. Verify that substrates for setting tile are firm; dry; clean; free of oil, waxy films, and curing compounds; and within flatness tolerances required by referenced ANSI A108 Series of tile installation standards for installations indicated.
2. Verify that installation of anchors, recessed frames, electrical and mechanical units of work, and similar items located in or behind tile has been completed before installing tile.
3. Verify that joints and cracks in tile substrates are coordinated with tile joint locations; if not coordinated, adjust joint locations in consultation with Architect.

D. Proceed with installation only after unsatisfactory conditions have been corrected.

3.2 PREPARATION

A. Protect surrounding work from damage.

B. Vacuum clean surfaces and damp clean.

C. Remove coatings, including curing compounds and other substances that contain soap, wax, oil, or silicone, that are incompatible with tile-setting materials.

D. Provide concrete substrates for tile floors installed with thin-set mortar that comply with flatness tolerances specified in referenced ANSI A108 Series of tile installation standards.
1. Fill cracks, holes, and depressions with trowelable leveling and patching compound according to tile-setting material Manufacturer's written instructions. Use product specifically recommended by tile-setting material Manufacturer.
2. Remove protrusions, bumps, and ridges by sanding or grinding. Level existing substrate surfaces to acceptable flatness tolerances.

E. Blending: For tile exhibiting color variations within ranges selected during Sample submittals, verify that tile has been factory blended and packaged so tile units taken from one package show same range of colors as those taken from other packages and

match approved Samples. If not factory blended, either return to Manufacturer or blend tiles at Project site before installing.

3.3 INSTALLATION, GENERAL

A. ANSI Tile Installation Standards: Comply with parts of ANSI A108 Series "Specifications for Installation of Ceramic Tile" that apply to types of setting and grouting materials and to methods indicated in ceramic tile installation schedules.

B. TCA Installation Guidelines: TCA's "Handbook for Ceramic Tile Installation." Comply with TCA installation methods indicated in ceramic tile installation schedules.

C. Extend tile work into recesses and under or behind equipment and fixtures to form complete covering without interruptions, unless otherwise indicated. Terminate work neatly at obstructions, edges, and corners without disrupting pattern or joint alignments.

D. Accurately form intersections and returns. Perform cutting and drilling of tile without marring visible surfaces. Carefully grind cut edges of tile abutting trim, finish, or built-in items for straight aligned joints. Fit tile closely to electrical outlets, piping, fixtures, and other penetrations so plates, collars, or covers overlap tile.

E. Jointing Pattern: Lay tile in grid pattern, unless otherwise indicated. Align joints when adjoining tiles on floor, base, walls, and trim are same size. Lay out tile work and center tile fields in both directions in each space or on each wall area. Adjust to minimize tile cutting. Provide uniform joint widths, unless otherwise indicated.
   1. For tile mounted in sheets, make joints between tile sheets same width as joints within tile sheets so joints between sheets are not apparent in finished work.

F. Expansion / Control Joints: Locate expansion joints and other sealant-filled joints, including control, contraction, and isolation joints, where indicated during installation of setting materials, mortar beds, and tile. Do not saw-cut joints after installing tiles.
   1. Locate joints in tile surfaces directly above joints in concrete substrates.
   2. Prepare joints and apply sealants to comply with requirements in Division 7 Section "Joint Sealants."
   3. Keep control joints free of adhesive or grout. Apply sealant to joints.

G. Grout tile to comply with requirements of the following tile installation standards:
   1. For ceramic tile grouts (latex-portland cement grouts), comply with ANSI A108.10.
   2. Allow tile to set for a minimum of 48 hours prior to grouting.

H. Where indicated, install cementitious backer units and treat joints to comply with ANSI A108.11 and Manufacturer's written instructions for type of application indicated.

3.4 WATERPROOFING AND CRACK-SUPPRESSION MEMBRANE INSTALLATION

A. Install waterproofing to comply with ANSI A108.13 and waterproofing Manufacturer's written instructions to produce waterproof membrane of uniform thickness bonded securely to substrate.

B. Install crack-suppression membrane to comply with Manufacturer's written instructions to produce membrane of uniform thickness bonded securely to substrate.

C. Do not install tile over waterproofing until waterproofing has cured and been tested to determine that it is watertight.

3.5 FLOOR TILE INSTALLATION

A. General: Install tile to comply with requirements in the Floor Tile Installation Schedule, including those referencing TCA installation methods and ANSI A108 Series of tile installation standards.
   1. For installations indicated below, follow procedures in ANSI A108 Series tile installation standards for providing 95 percent mortar coverage.
      a. Tile floors in wet areas
      b. Tile floors composed of rib-backed tiles.

B. Joint Widths: Install tile on floors with the following joint widths:
   1. Ceramic Mosaic Tile: 1/16 inch, verify per Manufacturers recommendation.

C. Stone Thresholds: Install stone thresholds at exposed tile edges and at locations indicated; set in same type of setting bed as abutting field tile, unless otherwise indicated.
   1. Set thresholds in latex-portland cement mortar for locations where mortar bed would otherwise be exposed above adjacent nontile floor finish.

D. Grout Sealer: Apply grout sealer to grout joints according to grout-sealer Manufacturer's written instructions. As soon as grout sealer has penetrated grout joints, remove excess sealer and sealer that has gotten on tile faces by wiping with soft cloth.

3.6 WALL TILE INSTALLATION

A. Install types of tile designated for wall installations to comply with requirements in the Wall Tile Installation Schedule, including those referencing TCA installation methods and ANSI setting-bed standards.

B. Form internal angles square and external angles bull nosed.

C. Sound tile after setting. Replace hollow sounding units.

D. Joint Widths: Install tile on walls with the following joint widths: As per tile Manufacturers recommendation;
   1. Ceramic Mosaic Tile: 1/16 inch
   2. Glazed Wall Tile: 1/16 inch.

3.7 CLEANING AND PROTECTING

A. Section 01700 - Execution Requirements: Final cleaning.

B. Cleaning: On completion of placement and grouting, clean all ceramic tile surfaces so they are free of foreign matter.

1. Remove latex-portland cement grout residue from tile as soon as possible.
2. Clean grout smears and haze from tile according to tile and grout Manufacturer's written instructions, but no sooner than 10 days after installation. Use only cleaners recommended by tile and grout Manufacturers and only after determining that cleaners are safe to use by testing on samples of tile and other surfaces to be cleaned. Protect metal surfaces and plumbing fixtures from effects of cleaning. Flush surfaces with clean water before and after cleaning.
3. Remove temporary protective coating by method recommended by coating Manufacturer that is acceptable to tile and grout Manufacturer. Trap and remove coating to prevent it from clogging drains.

C. When recommended by tile Manufacturer, apply coat of neutral protective cleaner to completed tile walls and floors. Protect installed tile work with kraft paper or other heavy covering during construction period to prevent staining, damage, and wear.

D. Prohibit foot and wheel traffic from tiled floors for at least seven days after grouting is completed.

E. Before final inspection, remove protective coverings and rinse neutral cleaner from tile surfaces.

3.8 FLOOR TILE INSTALLATION SCHEDULE

A. Tile Installation FTI-1: Interior floor installation on waterproof and crack-suppression membrane over concrete; thin-set mortar; TCA F122 and ANSI A108.5.
   1. Tile Type: Unglazed ceramic mosaic tile
   2. Thin-Set Mortar: Latex-portland cement mortar
   3. Grout: Polymer-modified unsanded grout.

3.9 WALL TILE INSTALLATION SCHEDULE

A. Tile Installation WTI-1: Interior wall installation over gypsum board on metal studs; thin-set mortar; TCA W242 and ANSI A108.4.
   1. Tile Type: Glazed wall tile
   2. Thin-Set Mortar: Organic Adhesive
   3. Grout: Polymer-modified unsanded grout.

B. Tile Installation WTI-2: Interior wall installation over cementitious backer units; organic adhesive; TCA W244 and ANSI A108.5.
   1. Tile Type: Glazed wall tile
   2. Thin-Set Mortar: Organic Adhesive
   3. Grout: Polymer-modified unsanded grout or silicone rubber grout, per Manufacturers' recommendation for wet areas.

3.10 SCHEDULES

END OF SECTION

SECTION 09510

ACOUSTICAL CEILINGS

PART 1 - GENERAL

1.1 SUMMARY

A. Section includes suspended metal grid ceiling system and perimeter trim; acoustic tile.; and supplementary acoustic insulation over system units.

B. Related Sections:
1. Section 07213 - Batt Insulation
2. Section 07900 - Joint Sealers
3. Section 08310 - Access Doors and Panels: Access panels
4. Section 15850 - Air Outlets and Inlets: Air diffusion devices in ceiling system
5. Section 16510 - Interior Luminaries: Light fixtures in ceiling system
6. Section 16821 - Public Address and Music Equipment: Speakers in ceiling system.

1.2 REFERENCES

A. ASTM International:
1. ASTM C635 - Standard Specification for the Manufacture, Performance, and Testing of Metal Suspension Systems for Acoustical Tile and Lay-in Panel Ceilings
2. ASTM C636 - Standard Practice for Installation of Metal Ceiling Suspension Systems for Acoustical Tile and Lay-In Panels
3. ASTM E1264 - Standard Classification for Acoustical Ceiling Products.

B. Ceilings and Interior Systems Construction Association:
1. CISCA - Acoustical Ceilings: Use and Practice.

C. Underwriters Laboratories Inc.:
1. UL - Fire Resistance Directory.

D. Intertek Testing Services (Warnock Hersey Listed):
1. WH - Certification Listings.

1.3 PERFORMANCE REQUIREMENTS

A. Suspension System: Rigidly secure acoustic ceiling system including integral mechanical and electrical components with maximum deflection of 1: 360.

1.4 SUBMITTALS

A. Section 01330 - Submittal Procedures: Submittal procedures.

B. Coordination Drawings: Reflected ceiling plans, drawn to scale, on which the following items are shown and coordinated with each other, based on input from installers of the items involved:
   1. Ceiling suspension system members.
   2. Method of attaching hangers to building structure:
      a. Furnish layouts for anchors, clips, and other ceiling attachment devices whose installation is specified in other Sections.
   3. Ceiling-mounted items including lighting fixtures, diffusers, grilles, speakers, sprinklers, access panels, and special moldings.
   4. Minimum Drawing Scale: 1/8 inch = 1 foot.

C. Samples for Initial Selection: For components with factory-applied color finishes.

D. Product Data: Submit data on metal grid system components and acoustic units.

E. Samples for Verification: For each component indicated and for each exposed finish required, prepared on Samples of size indicated below.
   1. Acoustical Panel: Set of 6-inch- square Samples of each type, color, pattern, and texture.
   2. Exposed Suspension System Members, Moldings, and Trim: Set of 12-inch-long Samples of each type, finish, and color.

F. Product Test Reports: Based on evaluation of comprehensive tests performed by a qualified testing agency, for each acoustical panel ceiling.

G. Research/Evaluation Reports: For each acoustical panel ceiling and components.

H. Maintenance Data: For finishes to include in maintenance manuals.

I. Qualification Data: For Installer of acoustical ceiling.

1.5 QUALITY ASSURANCE

A. Conform to CISCA requirements.

B. Source Limitations: Obtain each type of acoustical ceiling panel and supporting suspension system through one source from a single Manufacturer.

C. Maintain one copy of each document on site.

1.6 QUALIFICATIONS

A. Manufacturer: Company specializing in manufacturing products specified in this section with minimum three years documented experience.

B. Installer: Company specializing in performing Work of this section with minimum three years documented experience.

1.7 DELIVERY, STORAGE, AND HANDLING

A. Section 01600 - Product Requirements: Product storage and handling requirements.

B. Deliver acoustical panels, suspension system components, and accessories to Project site in original, unopened packages and store them in a fully enclosed, conditioned space where they will be protected against damage from moisture, humidity, temperature extremes, direct sunlight, surface contamination, and other causes.

C. Before installing acoustical panels, permit them to reach room temperature and a stabilized moisture content.

D. Handle acoustical panels carefully to avoid chipping edges or damaging units in any way.

1.8 MOCKUP

A. Section 01400 - Quality Requirements: Requirements for mockup.

B. Construct mock-up, 12 feet x 12 feet, including typical field and edge conditions.

C. Locate where directed by Architect/Engineer.

D. Incorporate accepted mockup as part of Work.

1.9 PRE-INSTALLATION MEETINGS

A. Section 01300 - Administrative Requirements: Pre-installation meeting.

B. Convene minimum two weeks prior to commencing work of this section.

1.10 ENVIRONMENTAL REQUIREMENTS

A. Section 01600 - Product Requirements.

B. Environmental Limitations: Do not install acoustical panel ceilings until spaces are enclosed and weatherproof, wet work in spaces is complete and dry, work above ceilings is complete, and ambient temperature and humidity conditions are maintained at the levels indicated for Project when occupied for its intended use.

C. Maintain uniform temperature of minimum 60 degrees F and maximum humidity of 40 percent prior to, during, and after acoustic unit installation.

1.11 SEQUENCING

A. Section 0110 - Summary: Work sequence.

B. Sequence Work to ensure acoustic ceilings are not installed until building is enclosed, sufficient heat is provided, dust generating activities have terminated, and overhead work is completed, tested, and approved.

C. Install acoustic units after interior wet work is dry.

D. Coordinate layout and installation of acoustical panels and suspension system with other construction that penetrates ceilings or is supported by them, including light fixtures, HVAC equipment, and partition assemblies.

1.12 EXTRA MATERIALS

A. Section 01700 - Execution Requirements: Spare parts and maintenance products.

B. Acoustical Ceiling Panels: Full-size panels equal to 3 percent of quantity installed.

C. Suspension System Components: Quantity of each exposed component equal to 2.0 percent of quantity installed.

D. Hold-Down Clips: Equal to 2.0 percent of quantity installed.

PART 2 - PRODUCTS

2.1 ACOUSTICAL PANELS, GENERAL

A. Acoustical Panel Standard: Provide Manufacturer's standard panels of configuration indicated that comply with ASTM E 1264 classifications as designated by types, patterns, acoustical ratings, and light reflectance, unless otherwise indicated.
   1. Mounting Method for Measuring NRC: Type E-400; plenum mounting in which face of test specimen is 15-3/4 inches away from test surface per ASTM E 795.

B. Acoustical Panel Colors and Patterns: Match appearance characteristics indicated for each product type.
   1. Where appearance characteristics of acoustical panels are indicated by referencing pattern designations in ASTM E 1264 and not Manufacturers' proprietary product designations, provide products selected by Architect from each Manufacturer's full range that comply with requirements indicated for type, pattern, color, light reflectance, acoustical performance, edge detail, and size.

C. Antimicrobial Fungicide Treatment: Provide acoustical panels with face and back surfaces coated with antimicrobial treatment consisting of Manufacturer's standard formulation with fungicide added to inhibit growth of mold and mildew and showing no mold or mildew growth when tested according to ASTM D 3273 and evaluated according to ASTM D 3274 or ASTM G 21.

2.2 SUSPENDED ACOUSTICAL CEILINGS

A. Manufacturers:
1. Armstrong World Industries, Fissured, Square Lay-in.
2. Celotex Building Products, Fissured, Square Lay-in.
3. USG Interiors, Fissured, Square Lay-in.
4. Substitutions: Section 01600 - Product Requirements.

2.3 SUSPENDED ACOUSTICAL CEILINGS COMPONENTS

A. Acoustic Panels: ASTM E1264, conforming to: Type III, Form 2, Pattern C D
1. Size: 24 x 24 inches
2. Thickness: 5/8 inches
3. Composition: Mineral
4. Density: .70 lb/cu ft
5. Light Reflectance: 80 percent
6. NRC Range: 50 to 60
7. STC Range: 35 to 39
8. Fire Hazard Classification: Class A Flame Spread 25 and smoke per ASTM E84
9. Edge: Square
10. Surface Color: White
11. Surface Finish: Non-directional fissured
12. Antimicrobial Treatment: Fungicide based.

2.4 METAL SUSPENSION SYSTEMS, GENERAL

A. Metal Suspension System Standard: Provide Manufacturer's standard direct-hung metal suspension systems of types, structural classifications, and finishes indicated that comply with applicable requirements in ASTM C 635.

B. Finishes and Colors, General: Comply with NAAMM's "Metal Finishes Manual for Architectural and Metal Products" for recommendations for applying and designating finishes. Provide Manufacturer's standard factory-applied finish for type of system indicated.
1. High-Humidity Finish: Comply with ASTM C 635 requirements for "Coating Classification for Severe Environment Performance" where high-humidity finishes are indicated.

C. Attachment Devices: Size for five times the design load indicated in ASTM C 635, Table 1, "Direct Hung," unless otherwise indicated. Comply with seismic design requirements.

D. Wire Hangers, Braces, and Ties: Provide wires complying with the following requirements:
1. Zinc-Coated, Carbon-Steel Wire: ASTM A 641/A 641M, Class 1 zinc coating, soft temper.
2. Size: Select wire diameter so its stress at 3 times hanger design load (ASTM C 635, Table 1, "Direct Hung") will be less than yield stress of wire, but provide not less than 0.106-inch- diameter wire.

E. Hold-Down Clips: Provide Manufacturer's standard hold-down clips spaced 24 inches o.c. on all cross tees.

2.5 METAL SUSPENSION SYSTEM FOR ACOUSTICAL PANEL CEILING

A. Products: Subject to compliance with requirements, provide one of the following:
1. Armstrong World Industries, Inc.; Prelude, 15/16" Face
2. USG Interiors, Inc.; DX, Exposed 15/16" Face
3. Substitutions: Section 01600 - Product Requirements.

B. Grid:
1. Non-fire Rated Grid: ASTM C635, intermediate; exposed T; components die cut and interlocking
2. Grid Materials: Commercial quality cold rolled steel with galvanized coating.
3. Exposed Grid Surface Width: 15/16 inch
4. Grid Finish: White color as selected
5. Accessories: Stabilizer bars, clips, splices, perimeter moldings, and hold down clips required for suspended grid system
6. Support Channels and Hangers: Galvanized steel; size and type to suit application, and ceiling system flatness requirement specified.

2.6 ACCESSORIES

A. Acoustic Batt Insulation: Specified in Section 07213, un-faced; 2 inch thick, where noted on documents.

B. Gypsum Board: Fire rated type; specified in Section 09260.

C. Acoustic Sealant For Perimeter Moldings: Specified in Section 07900.
1. Acoustical Sealant for Exposed and Concealed Joints: Manufacturer's standard nonsag, paintable, nonstaining latex sealant complying with ASTM C 834 and effective in reducing airborne sound transmission through perimeter joints and openings in building construction as demonstrated by testing representative assemblies according to ASTM E 90.

D. Gasket for Perimeter Moldings: Closed cell rubber sponge tape.

E. Touch-up Paint: Type and color to match acoustic and grid units.

PART 3 - EXECUTION

3.1 EXAMINATION

A. Section 01300 - Administrative Requirements: Coordination and project conditions.

B. Verify layout of hangers will not interfere with other work.

C. Examine substrates, areas, and conditions, including structural framing to which acoustical panel ceilings attach or abut, with Installer present, for compliance with requirements specified in this and other Sections that affect ceiling installation and anchorage and with requirements for installation tolerances and other conditions affecting performance of acoustical panel ceilings.
   1. Proceed with installation only after unsatisfactory conditions have been corrected.

3.2 INSTALLATION

A. Lay-In Grid Suspension System: General
   1. Install suspension system in accordance with ASTM C636, per Manufacturer's written instructions and CISCA's "Ceiling Systems Handbook."
   2. Install system capable of supporting imposed loads to deflection of 1/360 maximum.
   3. Locate system on room axis according to reflected plan.
   4. Install after major above ceiling work is complete. Coordinate location of hangers with other work.

B. Suspend ceiling hangers from building's structural members and as follows:
   1. Install hangers plumb and free from contact with insulation or other objects within ceiling plenum that are not part of supporting structure or of ceiling suspension system.
   2. Splay hangers only where required to miss obstructions; offset resulting horizontal forces by bracing, countersplaying, or other equally effective means.
   3. Where width of ducts and other construction within ceiling plenum produces hanger spacings that interfere with location of hangers at spacings required to support standard suspension system members, install supplemental suspension members and hangers in form of trapezes or equivalent devices.
   4. Secure wire hangers to ceiling suspension members and to supports above with a minimum of three tight turns. Connect hangers directly either to structures or to inserts, eye screws, or other devices that are secure and appropriate for substrate and that will not deteriorate or otherwise fail due to age, corrosion, or elevated temperatures.
   5. When steel framing does not permit installation of hanger wires at spacing required, install carrying channels or other supplemental support for attachment of hanger wires.
   6. Do not attach hangers to steel roof deck. Attach hangers to structural members.
   7. Hang suspension system independent of walls, columns, ducts, pipes and conduit.
   8. Space hangers not more than 48 inches o.c. along each member supported directly from hangers, unless otherwise indicated; provide hangers not more than 8 inches from ends of each member.
   9. Size supplemental suspension members and hangers to support ceiling loads within performance limits established by referenced standards and publications. Do not support components on main runners or cross runners when weight causes total dead load to exceed deflection capability.

C. Secure bracing wires to ceiling suspension members and to supports with a minimum of four tight turns. Suspend bracing from building's structural members as required for hangers, without attaching to metal roof deck.

D. Install suspension system runners so they are square and securely interlocked with one another. Remove and replace dented, bent, or kinked members.

E. Perimeter Molding:
   a. Install edge molding at intersection of ceiling and vertical surfaces into bed of acoustic sealant or with continuous gasket.
   b. Use longest practical lengths.
   c. Miter and rivet corners.
   d. Install at junctions with other interruptions.
2. Form expansion joints. Form to accommodate plus or minus 1 inch movement. Maintain visual closure.

F. Acoustic Units:
1. Fit acoustic units in place, free from damaged edges or other defects detrimental to appearance, function, and fit accurately into suspension system runners and edge moldings. Scribe and cut panels at borders and penetrations to provide a neat, precise fit.
2. Lay directional patterned units one way, as noted on documents. Fit border trim neatly against abutting surfaces.
3. Install units after above ceiling work is complete.
4. Install acoustic units level, in uniform plane, and free from twist, warp, and dents.
5. Cutting Acoustic Units:
   a. Cut to fit irregular grid and perimeter edge trim.
   b. Paint cut edges of panel remaining exposed after installation; match color of exposed panel surfaces using coating recommended in writing for this purpose by acoustical panel Manufacturer
6. Lay acoustic insulation for distance of 48 inches on both sides of acoustic partitions as indicated on Drawings.
7. Install hold-down clips to retain panels tight to grid system within 20 ft of exterior door and in areas indicated; space as recommended by panel Manufacturer's written instructions, unless otherwise indicated

3.3 ERECTION TOLERANCES

A. Section 01400 - Quality Requirements: Tolerances.

B. Maximum Variation from Flat and Level Surface: 1/8 inch in 10 feet.

C. Maximum Variation from Plumb of Grid Members Caused by Eccentric Loads: 2 degrees.

3.4 CLEANING

A. Clean exposed surfaces of acoustical panel ceilings, including trim, edge moldings, and suspension system members. Comply with Manufacturer's written instructions for cleaning and touchup of minor finish damage. Remove and replace ceiling components that cannot be successfully cleaned and repaired to permanently eliminate evidence of damage.

END OF SECTION

SECTION 09546

LINEAR METAL CEILINGS

PART 1 - GENERAL

1.1 SUMMARY

A. Section includes suspended metal grid ceiling system and perimeter trim; linear, formed metal soffit panels.

B. Related Sections:
1. Section 08310 - Access Doors and Panels: Access panels.

1.2 REFERENCES

A. ASTM International:
1. ASTM A653/A653M - Standard Specification for Steel Sheet, Zinc-Coated (Galvanized) or Zinc-Iron Alloy-Coated (Galvannealed) by the Hot-Dip Process.
2. ASTM A666 - Standard Specification for Austenitic Stainless Steel Sheet, Strip, Plate, and Flat Bar
3. ASTM B209 - Standard Specification for Aluminum and Aluminum-Alloy Sheet and Plate
4. ASTM B221 - Standard Specification for Aluminum and Aluminum-Alloy Extruded Bars, Rods, Wire, Profiles, and Tubes
5. ASTM C636 - Standard Practice for Installation of Metal Ceiling Suspension Systems for Acoustical Tile and Lay-In Panels.

1.3 PERFORMANCE REQUIREMENTS

A. Exterior Soffit and Suspension System: Resist wind uplift in accordance with applicable code without damage.

1.4 SUBMITTALS

A. Section 01330 - Submittal Procedures: Submittal procedures.

B. Shop Drawings: Indicate ceiling and soffit system reflected plan, location of mechanical and electrical components, details of junction with dissimilar materials, and points of suspension.

C. Product Data: Submit data for component profiles, materials, perimeter and integral trim, and space closures. Performance characteristics.

D. Samples: Submit two samples in size illustrating color and finish of exposed to view components.

E. Manufacturer’s Certificate: Certify products meet or exceed specified requirements.

1.5 QUALITY ASSURANCE

A. Products Requiring Electrical Connection: Listed and classified by Underwriters' Laboratories, Inc.

1.6 QUALIFICATIONS

A. Manufacturer: Company specializing in manufacturing products specified in this section with minimum three years experience.

B. Installer: Company specializing in performing Work of this section with minimum three years experience.

1.7 PRE-INSTALLATION MEETINGS

A. Section 01300 - Administrative Requirements: Pre-installation meeting.

B. Convene minimum two weeks prior to commencing work of this section.

1.8 DELIVERY, STORAGE, AND HANDLING

A. Section 01600 - Product Requirements: Product storage and handling requirements.

B. Accept factory-finished products on site in Manufacturer's unopened factory packaging only; reject opened packages.

C. Protect factory-finished products from damage to appearance by storing products in Manufacturer's unopened factory packaging in dry storage area.

1.9 COORDINATION

A. Section 01300 - Administrative Requirements: Coordination and project conditions.

B. Coordinate Work of this section with installation of mechanical and electrical components and with other construction activities affected by Work of this section.

C. Supply hanger clips during steel deck erection. Supply additional hangers and inserts as required.

1.10 WARRANTY

A. Section 01700 - Execution Requirements: Product warranties and product bonds.

B. Furnish five year Manufacturer warranty; include coverage for corrosion resistance and discoloration of surface finish.

1.11 EXTRA MATERIALS

A. Section 01700 - Execution Requirements: Spare parts and maintenance products.

B. Supply two standard lengths linear ceiling panels.

PART 2 - PRODUCTS

2.1 LINEAR METAL CEILING SYSTEM

A. Manufacturers:
1. Chicago Metallic Corp.
2. Armstrong World Industries, Inc.
3. Hunter Douglas Architectural Products Inc.
4. Substitutions: Section 01600 - Product Requirements.

2.2 COMPONENTS

A. Panels: Steel sheet, ASTM A653/A653M, galvanized with G90 zinc coating.
1. Profile: Channel forming module
2. Edge: Square, Vector for interface with compatible grid
3. Length: 2 x 4
4. Sight-Exposed Surface Finish: Enamel finish; from Manufacturer's standard range, as selected to match metal building soffit color.

B. Edge Molding and Splices: Same material, thickness, and finish as linear panels.

C. End Caps: Formed metal; same color and finish as sight-exposed surfaces of linear panels.

D. Accessories: Stabilizer bars, clips, hold down clips, and accessories as required for suspended grid system; sight-exposed surfaces same color and finish as sight-exposed surfaces of linear panels.

E. Suspension Members: Formed steel sections, with integral attachment points; galvanized finish; size and type to suit application and ceiling system flatness requirement specified.

F. Subgirt Members: ASTM A653/A653M, galvanized with G90 zinc coating, formed to resist imposed loads and to provide attachment for linear panels and accessories.

G. Access Panel: Furnish matching hinged panel with frameless appearance, swinging downward, with spring latch;

H. Touch-up Paint for Concealed Items: Zinc rich type.

2.3 FABRICATION

A. Shop cut linear panels to accommodate mechanical and electrical items.

B. Form internal and external corners of same material, thickness, finish, and profile to match exposed linear panels; back brace internal corners.

PART 3 - EXECUTION

3.1 EXAMINATION

A. Section 01300 - Administrative Requirements: Coordination and project conditions.

B. Verify layout of hangers do not interfere with other work.

C. Verify required utilities are available, in proper location, and ready for use.

D. Verify field measurements are as indicated on shop drawings and instructed by Manufacturer.

3.2 INSTALLATION

A. Suspension Components: Install after above soffit work is complete in accordance with ASTM C636 and ASTM E580.
   1. Hang carrying members independent of walls, columns, ducts, light fixtures, pipe, and conduit; where carrying members are spliced, avoid visible displacement of face panels with adjacent panels.
   2. Where ducts or other equipment prevent regular spacing of hangers, reinforce nearest adjacent hangers to span required distance.
   3. Locate suspension system for linear panel layout as indicated on Drawings.

B. Linear Panels: Align end joints.
   1. Set exterior end joints with 1/16 inch gap for expansion and contraction.
   2. Install recessed space closures between linear panels at exterior locations.
   3. Install edge moldings at intersections of soffit junctions with other finishes, and at vertical surfaces; use maximum piece lengths.
   4. Install end caps at sight-exposed ends of linear panels.
   5. Field miter corners and / or Install prefabricated corner sections.
   6. Exercise care when site cutting sight-exposed finished components to ensure surface finish is not defaced.

3.3 ERECTION TOLERANCES

A. Section 01400 - Quality Requirements: Tolerances.

B. Maximum Variation from Flat and Level Surface: 1/8 inch in 10 feet.

C. Maximum Variation from Plumb of Grid Members Caused by Eccentric Loads: 2 degrees.

D. Maximum Variation From Dimensioned Position: 1/4 inch.

3.4 CLEANING

A. Section 01700 - Execution Requirements: Final cleaning.

B. Remove protective coating or film.

C. Clean surfaces.

D. Replace damaged or abraded components.

END OF SECTION

SECTION 09650

RESILIENT FLOORING

PART 1 - GENERAL

1.1 SUMMARY

A. Section includes resilient tile flooring and resilient base.

1.2 REFERENCES

A. ASTM International:
1. ASTM E84 - Standard Test Method for Surface Burning Characteristics of Building Materials
2. ASTM E662 - Standard Test Method for Specific Optical Density of Smoke Generated by Solid Materials
3. ASTM F1066 - Standard Specification for Vinyl Composition Floor Tile
4. ASTM F1344 - Standard Specification for Rubber Floor Tile
5. ASTM F1861 - Standard Specification for Resilient Wall Base.

B. Federal Specification Unit:
1. FS L-F-475 - Floor Covering Vinyl, Surface (Tile and Roll), with Backing.

1.3 PERFORMANCE REQUIREMENTS

A. Conform to applicable code for fire performance ratings as follows:
1. Flooring, critical radiant flux (CRF): Minimum 0.45 watt per square centimeter, per ASTM E 648
2. Flooring, smoke developed: Maximum 450, per ASTM E662
3. Wall base, flame spread: Maximum 75, per ASTM E84
4. Wall base, smoke developed: Maximum 450, per ASTM E84.

B. Source Limitations for Tile: Obtain all tile of same type and color or finish from one source or producer.

C. Obtain tile from same production run and of consistent quality in appearance and physical properties for each contiguous area.

1.4 SUBMITTALS

A. Section 01330 - Submittal Procedures: Submittal procedures.

B. Product Data: Submit data describing physical and performance characteristics; including sizes, patterns and colors available; and installation instructions.

C. Samples:
1. Submit Manufacturer's complete set of color samples for initial selection.

2. Submit two samples, 4 x 4 inch in size illustrating color and pattern for each resilient flooring product specified.

D. Manufacturer's Certificate: Certify Products meet or exceed specified requirements.

E. Qualifications Data: For Installer of Tile products.

1.5 CLOSEOUT SUBMITTALS

A. Section 01700 - Execution Requirements: Closeout procedures.

B. Operation and Maintenance Data: Submit maintenance procedures, recommended maintenance materials, and suggested schedule for cleaning, stripping, and re-waxing.

1.6 QUALIFICATIONS

A. Manufacturer: Company specializing in manufacturing products specified in this section with minimum three years documented experience.

B. Installer: Company specializing in performing Work of this section with minimum three years documented experience.

1.7 DELIVERY, STORAGE, AND HANDLING

A. Section 01600 - Product Requirements: Product storage and handling requirements.

B. Protect roll materials from damage by storing per Manufacturers recommendation.

C. Store resilient products and installation materials in dry spaces protected from the weather, with ambient temperatures maintained within range recommended by Manufacturer, but not less than 50 deg F or more than 90 deg F. Store tiles on flat surfaces.

1.8 ENVIRONMENTAL REQUIREMENTS

A. Section 01600 - Product Requirements.

B. Maintain temperature in storage area between 55 degrees F and 90 degrees F.

C. Store materials for not less than 48 hours prior, during and after installation in area of installation at temperature of 70 degrees F to achieve temperature stability. Thereafter, maintain conditions above 55 degrees F and not more than 90 degrees F.

D. Close spaces to traffic during floor covering installation.

E. Close spaces to traffic for 48 hours after floor covering installation.

F. Install resilient products after other finishing operations, including painting, have been completed.

1.9 EXTRA MATERIALS

A. Section 01700 - Execution Requirements: Spare parts and maintenance products.

B. Furnish extra materials described below that match products installed and that are packaged with protective covering for storage and identified with labels describing contents.
   1. Floor Tile: Furnish 1 box for every 50 boxes or fraction thereof, of each type, color, and pattern of floor tile installed.
   2. Furnish not less than 2 undamaged boxes for each color selection.

PART 2 - PRODUCTS

2.1 TILE FLOORING

A. Manufacturers:
   1. Armstrong World Industries, Inc.
   2. Azrock Commercial Flooring
   3. Roppe Corp.
   4. Tarkett Model
   5. Substitutions: Section 01600 - Product Requirements.

B. Vinyl Composition Tile: ASTM F1066:
   1. Size: 12 x 12 inch
   2. Thickness: 0.125 inch
   3. Pattern: Color and pattern dispersed uniformly throughout its thickness, Class 2 – through pattern
   4. Color to be selected by Architect from the full range currently available from Manufacturer.

C. Rubber Tile: ASTM F1066, ASTM F1344, Class I, Type A, B:
   1. Size: 12 x 12 inch
   2. Overall Thickness: 0.125 inch
   3. Base Thickness: 0.050 inch
   4. Design: Molded, in disc, square, diamond pattern
   5. Style: Solid color or Mottled.

2.2 RESILIENT BASE

A. Manufacturers:
   1. Armstrong World Industries, Inc. Model ‘Color-Integrated Rubber Wall Base’
   2. Tarkett Commercial Flooring Model ‘Napco Rubber Wall Base’
   3. Roppe Corp. Model ‘Pinnacle Rubber Base’
   4. Substitutions: Section 01600 - Product Requirements
   5. Vinyl base is not acceptable.

B. Base: ASTM F1861 Type TP Group 1 Rubber; top set coved:
   1. Height: 4 inch

2. Thickness: 1/8 inch thick
3. Finish: Satin or Matte
4. Length: Roll
5. Style: Coved
6. Accessories: Premolded external corners and end stops
7. Color to be selected by Architect from the full range currently available from Manufacturer.

2.3 ACCESSORIES

A. Subfloor Filler: Cementitious; type recommended by adhesive material Manufacturer.

B. Primers and Adhesives: Waterproof; types recommended by flooring Manufacturer.

C. Moldings and Edge Strips: Standard aluminum chromium alloy strips one inch wide and beveled, and of proper depth for the tile, fastened with countersunk screws and expansion shields at 8 inches on center. Install where vinyl tile joins concrete finish floor.

D. Filler for Coved Base: types recommended by flooring Manufacturer.

E. Sealer and Wax: Types recommended by flooring Manufacturer.

PART 3 - EXECUTION

3.1 EXAMINATION

A. Section 01310 - Project Management and Coordination: Verification of existing conditions before starting Work.

B. Verify concrete floors are dry to maximum moisture content as recommended by Manufacturer, and exhibit negative alkalinity, carbonization, and dusting.

C. Verify floor and lower wall surfaces are free of substances capable of impairing adhesion of new adhesive and finish materials.

D. Verify that floor surfaces are smooth and flat with maximum variation of 1/8 inch in 10 feet and are ready to receive work.

E. Examine substrates, with Installer present, for compliance with requirements for installation tolerances, moisture content, and other conditions affecting performance.
1. Verify that finishes of substrates comply with tolerances and other requirements specified in other Sections and that substrates are free of cracks, ridges, depressions, scale, and foreign deposits that might interfere with adhesion of resilient products.
2. Proceed with installation only after unsatisfactory conditions have been corrected.

3.2 PREPARATION

A. Prepare substrates according to Manufacturer's written recommendations to ensure adhesion of resilient products.

B. Remove sub-floor ridges and bumps. Fill minor low spots, cracks, joints, holes, and other defects with sub-floor filler to achieve smooth, flat, hard surface.

C. Prohibit traffic until filler is cured.

D. Clean substrate. Remove substrate coatings and other substances that are incompatible with adhesives and that contain soap, wax, oil, or silicone, using mechanical methods recommended by Manufacturer. Do not use solvents.

E. Apply primer as required to prevent "bleed-thru" or interference with adhesion by substances cannot be removed.

3.3 INSTALLATION - TILE FLOORING

A. Mix tile from container to ensure shade variations are consistent when tile is placed. Match tiles for color and pattern by selecting tiles from cartons in the same sequence as manufactured and packaged, if so numbered. Discard broken, cracked, chipped, or deformed tiles.

B. Adhere tiles to flooring substrates using a full spread of adhesive applied to substrate to produce a completed installation without open cracks, voids, raising and puckering at joints, telegraphing of adhesive spreader marks, and other surface imperfections.

C. Lay flooring with joints and seams parallel to building lines to produce symmetrical tile pattern.

D. Owner to select final pattern; Lay tiles with grain running in one direction or with basket weave pattern. Lay out tiles from center marks established with principal walls, discounting minor offsets, so tiles at opposite edges of room are of equal width. Adjust as necessary to avoid using cut widths that equal less than one-half tile at perimeter.

E. Scribe flooring to walls, columns, cabinets, floor outlets, and other appurtenances to produce tight joints.

F. Extend tiles into toe spaces, door reveals, closets, and similar openings.

G. Where floor finishes are different on opposite sides of door, terminate flooring under centerline of door.

H. Install edge strips at unprotected or exposed edges, where flooring terminates, and where indicated. Secure metal strips before installation of flooring with stainless steel screws.

I. Install flooring in recessed floor access covers. Maintain floor pattern, install tiles on covers for telephone and electrical ducts and similar items in finished floor areas. Maintain overall continuity of color and pattern with pieces of tile installed on covers. Tightly adhere tile edges to substrates that abut covers and to cover perimeters.

J. At movable partitions, install flooring under partitions without interrupting floor pattern.

K. Install feature strips and floor markings where indicated. Fit joints tightly.

3.4 INSTALLATION - BASE

A. Apply wall base to walls, columns, pilasters, casework and cabinets in toe spaces, and other permanent fixtures in rooms and areas where base is required. Tightly adhere wall base to substrate throughout length of each piece, with base in continuous contact with horizontal and vertical substrates.

B. Install wall base in lengths as long as practicable without gaps at seams and with tops of adjacent pieces aligned. Fit joints tightly and make vertical. Maintain minimum dimension of 18 inches between joints.

C. Miter internal corners: Use straight pieces of maximum lengths possible. Form by cutting an inverted V-shaped notch in toe of wall base at the point where corner is formed. Shave back of base where necessary to produce a snug fit to substrate.

D. At external corners, use premolded units. At exposed ends, use premolded units. Install premolded corners at external corners before installing straight pieces

E. Install base on solid backing. Bond tightly to wall and floor surfaces.

F. Scribe and fit to door frames and other interruptions.

G. On masonry surfaces or other similar irregular substrates, fill voids along top edge of wall base with Manufacturer's recommended adhesive filler material.

H. Do not stretch wall base during installation.

3.5 CLEANING AND PROTECTION OF INSTALLED CONSTRUCTION

A. Section 01700 - Execution Requirements: Final cleaning.

B. Remove excess adhesive from floor, base, and wall surfaces without damage. Perform the following operations immediately after completing resilient product installation:
   1. Remove adhesive and other blemishes from exposed surfaces.
   2. Sweep and vacuum surfaces thoroughly.
   3. Damp-mop surfaces to remove marks and soil.
      a. Do not wash surfaces until after time period recommended by Manufacturer.

C. Prohibit traffic on resilient flooring for 48 hours after installation.

D. Protect resilient products from mars, marks, indentations, and other damage from construction operations and placement of equipment and fixtures during remainder of construction period. Use protection methods recommended in writing by Manufacturer.
   1. Apply protective floor polish to horizontal surfaces that are free from soil, visible adhesive and surface blemishes if recommended in writing by Manufacturer.
      a. Use commercially available product acceptable to Manufacturer.
      b. Coordinate selection of floor polish with Owner's maintenance service.
   2. Cover products installed on horizontal surfaces with undyed, untreated building paper until Substantial Completion.
   3. Do not move heavy and sharp objects directly over surfaces. Place hardboard or plywood panels over flooring and under objects while they are being moved. Slide or roll objects over panels without moving panels.

E. Clean, seal, and maintain resilient flooring products.

END OF SECTION

SECTION 09900

PAINTS AND COATINGS

PART 1 - GENERAL

1.1 SUMMARY

A. Section includes surface preparation and field application of paints, stains, varnishes, and other coatings.

B. Related Sections:
1. Section 05500 - Metal Fabrications: Shop primed items
2. Section 15075 - Mechanical Identification
3. Section 16075 - Electrical Identification.

1.2 REFERENCES

A. ASTM International:
1. ASTM D16 - Standard Terminology Relating to Paint, Varnish, Lacquer, and Related Products
2. ASTM D4442 - Standard Test Methods for Direct Moisture Content Measurement of Wood and Wood-Base Materials.

B. Painting and Decorating Contractors of America:
1. PDCA - Architectural Painting Specification Manual.

C. SSPC: The Society for Protective Coatings:
1. SSPC - Steel Structures Painting Manual.

1.3 DEFINITIONS

A. Conform to ASTM D16 for interpretation of terms used in this section.

1.4 SUBMITTALS

A. Section 01330 - Submittal Procedures: Submittal procedures.

B. Product Data: Submit data on finishing products.

C. Samples:
1. Submit two paper chip samples, 8 ½ x 11 inch in size illustrating range of colors and textures available for each surface finishing product scheduled.

D. Manufacturer's Installation Instructions: Submit special surface preparation procedures and substrate conditions requiring special attention.

1.5 CLOSEOUT SUBMITTALS

A. Section 01700 - Execution Requirements: Closeout procedures.

B. Operation and Maintenance Data: Submit data on cleaning, touch-up, and repair of painted and coated surfaces.

1.6 QUALIFICATIONS

A. Manufacturer: Company specializing in manufacturing products specified in this section with minimum three years documented experience.

B. Applicator: Company specializing in performing work of this section with minimum three years documented experience.

C. Comply with governing codes and regulations. Regulations: Compliance with VOC and environmental regulations.

1.7 MOCKUP

A. Section 01400 - Quality Requirements: Mock-up requirements.

B. Construct mockup panel, 4 x 4 feet, illustrating coating color, texture, and finish.

C. Construct door and frame assembly illustrating paint and stain and varnish coating color, texture, and finish.

D. Locate where directed by Architect/Engineer.

E. Incorporate accepted mockup as part of Work.

1.8 PRE-INSTALLATION MEETINGS

A. Section 01300 - Administrative Requirements: Pre-installation meeting.

B. Convene minimum two weeks prior to commencing work of this section.

1.9 DELIVERY, STORAGE, AND HANDLING

A. Section 01600 - Product Requirements: Product storage and handling requirements.

B. Deliver products to site in sealed and labeled containers; inspect to verify acceptability.

C. Container Label: Include Manufacturer's name, type of paint, brand name, lot number, brand code, coverage, surface preparation, drying time, cleanup requirements, color designation, and instructions for mixing and reducing.

D. Paint Materials: Store at minimum ambient temperature of 45 degrees F and maximum of 90 degrees F, in ventilated area, and as required by Manufacturer's instructions.

1.10 ENVIRONMENTAL REQUIREMENTS

A. Section 01600 - Product Requirements.

B. Do not apply materials when surface and ambient temperatures are outside temperature ranges required by paint product Manufacturer.

C. Do not apply exterior coatings during rain or snow when relative humidity is outside humidity ranges, or moisture content of surfaces exceed those required by paint product Manufacturer.

D. Minimum Application Temperatures for Latex Paints: 45 degrees F for interiors; 50 degrees F for exterior; unless required otherwise by Manufacturer's instructions.

E. Minimum Application Temperature for Varnish and Finishes: 65 degrees F for interior or exterior, unless required otherwise by Manufacturer's instructions.

F. Provide lighting level of 80 ft candle measured mid-height at substrate surface.

1.11 SEQUENCING

A. Section 01100 - Summary: Work sequence.

B. Sequence application to the following:
1. Do not apply finish coats until paintable sealant is applied.
2. Back prime wood trim before installation of trim.

1.12 WARRANTY

A. Section 01700 - Execution Requirements: Product warranties and product bonds.

B. Furnish five year Manufacturer warranty for paints and coatings.

1.13 EXTRA MATERIALS

A. Section 01700 - Execution Requirements: Spare parts and maintenance products.

B. Supply 1 gallons of each color, type, and surface texture; store where directed.

C. Label each container with color, type, texture, room locations, and in addition to Manufacturer's label.

PART 2 - PRODUCTS

2.1 PAINTS AND COATINGS

A. Manufacturers: Subject to compliance with requirements, provide products by one of the following or an approved equivalent Manufacturer:

1. Benjamin Moore Model Professional coatings ‘Super Spec’
2. PPG Architectural Finishes Model ‘High Performance Coatings’
3. Pratt and Lambert Model ‘Pro-Hide Gold’
4. Sherwin Williams Model ’High Performance Architectural’
5. Substitutions: Section 01600 - Product Requirements.

2.2 PAINT, GENERAL

A. Material Compatibility:
1. Provide materials for use within each paint system that are compatible with one another and substrates indicated, under conditions of service and application as demonstrated by Manufacturer, based on testing and field experience.
2. For each coat in a paint system, provide products recommended in writing by Manufacturers of topcoat for use in paint system and on substrate indicated.

B. Colors: As selected by Architect from Manufacturer's full range.

C. Material:
1. Waterborne Latex (Acrylic) Emulsion Paint.
a. Zero VOC paint: Flat and eggshell sheens, VOC content less than 5 grams/liter.
b. Low VOC paint: Semi-gloss and gloss sheens, VOC content less than 100 grams/liter.

2.3 COMPONENTS

A. Coatings: Ready mixed, except field catalyzed coatings. Prepare coatings:
1. To soft paste consistency, capable of being readily and uniformly dispersed to homogeneous coating
2. For good flow and brushing properties
3. Capable of drying or curing free of streaks or sags.

B. Accessory Materials: Linseed oil, shellac, turpentine, paint thinners and other materials not specifically indicated but required to achieve finishes specified; commercial quality.

C. Patching Materials: Latex filler.

D. Fastener Head Cover Materials: Latex filler.

E. Wood-Knot Sealer: Sealer recommended in writing by topcoat Manufacturer for use in paint systems indicated.

PART 3 - EXECUTION

3.1 EXAMINATION

A. Section 01300 - Administrative Requirements: Coordination and project conditions.

B. Verify surfaces and substrate conditions are ready to receive Work as instructed by product Manufacturer.

C. Examine surfaces scheduled to be finished prior to commencement of work. Report conditions capable of affecting proper application.

D. Test shop applied primer for compatibility with subsequent cover materials.

E. Measure moisture content of surfaces using electronic moisture meter. Do not apply finishes unless moisture content of surfaces are below the Manufacturers recommendation or at least the following maximums:
1. Plaster and Gypsum Wallboard: 12 percent
2. Masonry, Concrete, and Concrete Unit Masonry: 12 percent
3. Interior Wood: 15 percent, measured in accordance with ASTM D4442
4. Exterior Wood: 15 percent, measured in accordance with ASTM D4442
5. Concrete Floors: 8 percent.

3.2 PREPARATION

A. Comply with Manufacturer's written instructions and recommendations, applicable to substrates indicated.

B. Surface Appurtenances: Remove electrical plates, hardware, light fixture trim, escutcheons, and fittings prior to preparing surfaces or finishing.
1. After completing painting operations, use workers skilled in the trades involved to reinstall items that were removed. Remove surface-applied protection if any.
2. Do not paint over labels of independent testing agencies or equipment name, identification, performance rating, or nomenclature plates.

C. Surfaces: Correct defects and clean surfaces capable of affecting work of this section. Remove or repair existing coatings exhibiting surface defects.

D. Marks: Seal with shellac those which may bleed through surface finishes.

E. Impervious Surfaces: Remove mildew by scrubbing with solution of tri-sodium phosphate and bleach. Rinse with clean water and allow surface to dry.

F. Aluminum Surfaces Scheduled for Paint Finish: Remove surface contamination by steam or high pressure water. Remove oxidation with acid etch and solvent washing. Apply etching primer immediately following cleaning.

G. Asphalt, Creosote, or Bituminous Surfaces Scheduled for Paint Finish: Remove foreign particles to permit adhesion of finishing materials. Apply compatible sealer or primer.

H. Insulated Coverings: Remove dirt, grease, and oil from canvas and cotton.

I. Concrete Floors: Remove contamination, acid etch, and rinse floors with clear water. Verify required acid-alkali balance is achieved. Allow to dry.

J. Copper Surfaces Scheduled for Paint Finish: Remove contamination by steam, high pressure water, or solvent washing. Apply vinyl etch primer immediately following cleaning.

K. Copper Surfaces Scheduled for Natural Oxidized Finish: Remove contamination by applying oxidizing solution of copper acetate and ammonium chloride in acetic acid. Rub on repeatedly for required effect. Once attained, rinse surfaces with clear water and allow to dry.

L. Gypsum Board Surfaces: Fill minor defects with filler compound. Spot prime defects after repair.

M. Galvanized Surfaces: Remove surface contamination and oils and wash with solvent. Apply coat of etching primer.

N. Concrete and Unit Masonry Surfaces Scheduled to Receive Paint Finish: Remove dirt, loose mortar, scale, salt or alkali powder, and other foreign matter. Remove oil and grease with solution of tri-sodium phosphate; rinse well and allow to dry. Remove stains caused by weathering of corroding metals with solution of sodium metasilicate after thoroughly wetting with water. Allow to dry.

O. Plaster Surfaces: Fill hairline cracks, small holes, and imperfections with latex patching plaster. Make smooth and flush with adjacent surfaces. Wash and neutralize high alkali surfaces.

P. Uncoated Steel and Iron Surfaces: Remove grease, mill scale, weld splatter, dirt, and rust. Where heavy coatings of scale are evident, clean using methods recommended in writing by paint Manufacturer; clean by washing with solvent. Apply treatment of phosphoric acid solution, ensuring weld joints, bolts, and nuts are similarly cleaned. Spot prime paint after repairs.

Q. Shop Primed Steel Surfaces: Sand and scrape to remove loose primer and rust. Feather edges to make touch-up patches inconspicuous. Clean surfaces with solvent. Prime bare steel surfaces. Prime metal items including shop primed items.

R. Interior Wood Items Scheduled to Receive Paint Finish: Wipe off dust and grit prior to priming. Seal knots, pitch streaks, and sappy sections with sealer. Fill nail holes and cracks after primer has dried; sand between coats.

S. Interior Wood Items Scheduled to Receive Transparent Finish: Wipe off dust and grit prior to sealing, seal knots, pitch streaks, and sappy sections with sealer. Fill nail holes and cracks after sealer has dried; sand lightly between coats.

T. Exterior Wood Scheduled to Receive Paint Finish: Remove dust, grit, and foreign matter. Seal knots, pitch streaks, and sappy sections. Fill nail holes with tinted exterior paintable caulking compound after prime coat has been applied.

U. Metal Doors Scheduled for Painting: Prime metal door top and bottom edge surfaces.

3.3 APPLICATION

A. Apply paints according to Manufacturer's written instructions.
   1. Use applicators and techniques suited for paint and substrate indicated.
   2. Paint surfaces behind movable equipment and furniture same as similar exposed surfaces. Before final installation, paint surfaces behind permanently fixed equipment or furniture with prime coat only.
   3. Paint front and backsides of access panels, removable or hinged covers, and similar hinged items to match exposed surfaces.

B. Do not apply finishes to surfaces that are not dry. Allow applied coats to dry before next coat is applied.

C. Apply each coat to uniform appearance. Apply each coat of paint slightly darker than preceding coat unless specified otherwise.

D. Sand wood and metal surfaces lightly between coats to achieve required finish.

E. Vacuum clean surfaces of loose particles. Use tack cloth to remove dust and particles just prior to applying next coat.

F. Where clear finishes are required, tint fillers to match wood. Work fillers into grain before set. Wipe excess from surface.

G. Prime concealed surfaces of woodwork with primer paint.

H. Apply paints to produce surface films without cloudiness, spotting, holidays, laps, brush marks, roller tracking, runs, sags, ropiness, or other surface imperfections. Cut in sharp lines and color breaks.

I. Prime concealed surfaces of interior wood surfaces scheduled to receive stain or varnish finish with gloss varnish reduced 25 percent with thinner.

J. Blockfiller shall be applied to the interior concrete block with not less than one (1) heavy coat and exterior concrete block with not less than two (2) heavy coats in a manner with brush and roller that forces the blockfiller into the fissures and pores of the block faces. Apply additional coats if required to produce a smooth, uniform surface and to close all open pores, crevices and pin holes.

K. Paint exposed conduit and electrical equipment occurring in finished areas. Color and texture to match adjacent surfaces. Do not paint light fixtures.

L. All surfaces shall receive either a prime coat or enamel undercoat before finish coats are applied. The type of finish coat shall determine the type of prime coat. Previously painted surfaces shall be sound and tightly adhering to its foundation.

M. No surface will be considered acceptable to receive finish paint until it has received a prime coat or enamel undercoat, and any surface that is finish painted without a prime coating shall be repainted as directed by the Architect/Engineer.

N. Do not paint naturally finished aluminum surfaces.

O. Finishing Mechanical And Electrical Equipment:
1. Refer to Section 15075 and Section 16075 for schedule of color coding and identification banding of equipment, duct work, piping, and conduit.
2. Paint both sides and edges of plywood backboards for electrical and telephone equipment before installing equipment.
3. Reinstall electrical cover plates, hardware, light fixture trim, escutcheons, and fittings removed prior to finishing.

3.4 FIELD QUALITY CONTROL

A. Section 01400 - Quality Requirements: Testing and Inspection Services.

B. Testing of Paint Materials: Owner reserves the right to invoke the following procedure at any time and as often as Owner deems necessary during the period when paints are being applied:
1. Owner will engage the services of a qualified testing agency to sample paint materials being used. Samples of material delivered to Project site will be taken, identified, sealed, and certified in presence of Contractor.
2. Testing agency will perform tests for compliance with product requirements.
3. Owner may direct Contractor to stop applying paints if test results show materials being used do not comply with product requirements. Contractor shall remove noncomplying-paint materials from Project site, pay for testing, and repaint surfaces painted with rejected materials. Contractor will be required to remove rejected materials from previously painted surfaces if, on repainting with complying materials, the two paints are incompatible.

C. Inspect and test questionable coated areas.

3.5 CLEANING

A. Section 01700 - Execution Requirements: Final cleaning.

B. Collect waste material which may constitute fire hazard, place in closed metal containers, and remove daily from site.

C. After completing paint application, clean spattered surfaces. Remove spattered paints by washing, scraping, or other methods. Do not scratch or damage adjacent finished surfaces.

D. Protect work of other trades against damage from paint application. Correct damage to work of other trades by cleaning, repairing, replacing, and refinishing, as approved by Architect, and leave in an undamaged condition.

E. At completion of construction activities of other trades, touch up and restore damaged or defaced painted surfaces.

3.6 SCHEDULE - EXTERIOR SURFACES

A. Wood - Painted (Opaque):
1. One coat of alkyd primer sealer
2. Two coats of alkyd enamel, semi-gloss

B. Pavement Markings:
1. Two coats of paint, white

C. Concrete, Concrete Block, Cement Plaster:
1. One coat of block primer
2. Two coats of latex, flat

D. Cement Plaster Soffits
1. One coat of primer sealer latex
2. Two coats of latex, flat

E. Copper:
1. One coat etching primer
2. One coat of alkyd enamel

F. Steel - Unprimed:
1. One coat of Low VOC modified alkyd primer
2. Two coats of Low VOC modified alkyd enamel, semi-gloss

G. Steel - Shop Primed:
1. Touch-up with primer
2. Two coats of Low VOC modified alkyd enamel, semi-gloss

H. Steel - Galvanized:
1. One coat galvanize primer
2. Two coats of Low VOC modified alkyd enamel, semi-gloss

I. Aluminum - Mill Finish:
1. One coat etching primer
2. Two coats of alkyd enamel, semi-gloss

J. Truck Wash Bay
1. One coat Waterborne Epoxy Block Filler
2. One coat Epoxy Metal Primer
3. Two coat Low Cure Epoxy Mastic Coating

3.7 SCHEDULE - INTERIOR SURFACES

A. Wood - Painted:
1. One coat of alkyd prime sealer

2. Two coats of acrylic latex enamel, semi-gloss

B. Wood - Transparent:
1. Filler coat (for open grained wood only)
2. Two coats of stain
3. One coat sealer
4. Two coats of varnish, satin

C. Concrete, Concrete Block:
1. One coat of block filler
2. Two coats of alkyd, semi-gloss

D. Steel - Unprimed:
1. One coat of Low VOC modified alkyd primer
2. Two coats of Low VOC modified alkyd enamel, semi-gloss

E. Steel - Primed:
1. Touch-up with primer
2. Two coats of Low VOC modified alkyd enamel, semi-gloss

F. Steel - Galvanized:
1. One coat galvanize primer or acrylic primer
2. Two coats of Low VOC modified alkyd enamel, semi-gloss

G. Aluminum - Mill Finish:
1. One coat etching primer
2. Two coats of Low VOC modified alkyd enamel, semi-gloss

H. Gypsum Board Wall and Ceilings:
1. One coat of acrylic primer sealer
2. Two coats of Zero VOC latex acrylic, eggshell

END OF SECTION

SECTION 09910

PAINTING FUELING SYSTEM

PART 1 - GENERAL

1.1 SECTION INCLUDES

A. Surface Preparation

B. Surface Finish Schedule

1.2 RELATED WORK

A. Section Various: Shop primed items, as called for under individual sections.

1.3 REFERENCES

A. ANSI/ASTM D16 - Definitions of Terms Relating to Paint, Varnish, Lacquer, and Related Products.

1.4 DEFINITION

A. Conform to ANSI/ASTM D16 for interpretation of terms used in this Section.

1.5 QUALITY ASSURANCE

A. Product Manufacturer: Company specializing in manufacturing quality paints and finishing products with ten years experience.

B. Applicator: Company specializing in commercial painting and industrial painting with five years documented experience.

1.6 REGULATORY REQUIREMENTS

A. Conform to applicable code for flame/fuel/smoke rating requirements for finishes.

1.7 SUBMITTALS

A. Submit product data under provisions of Section 01330 - Submittals.

B. Provide product data on all finishing products.

C. Submit samples under provisions of Section 01330 - Submittals.

D. Submit Manufacturers' application instructions under provisions of Section 01330 - Submittals.

1.8 DELIVERY, STORAGE, AND HANDLING

A. Deliver products to site under provisions of Section 01600 - Material and Equipment.

B. Store and protect products under provisions of Section 01600 - Material and Equipment.

C. Deliver products to site in sealed and labeled containers; inspect to verify acceptance.

D. Container labeling to include Manufacturer's name, type of paint, brand name, brand code, coverage, surface preparation, drying time, cleanup, color designation, and instructions for mixing and reducing.

E. Store paint materials at minimum ambient temperature at 45°F (7°C) and a maximum of 90°F (32°C), in well ventilated areas, unless required otherwise by Manufacturers' instructions.

F. Take precautionary measures to prevent fire hazards and spontaneous combustion.

1.9 ENVIRONMENTAL REQUIREMENTS

A. Provide continuous ventilation and heating facilities to maintain surface and ambient temperatures above 45°F for 24 hours before, during and 48 hours after application of finishes, unless required otherwise by Manufacturer's instructions.

B. Do not apply exterior coatings during rain or snow, or when relative humidity is above 50%, unless required otherwise by Manufacturer's instructions.

C. Minimum Application Temperatures for Latex Paints: 45°F (7°C) for interiors; 50°F (10°C) for exteriors, unless required otherwise by Manufacturer's instructions.

1.10 EXTRA STOCK

A. Provide one-gallon container of each color at each site to Owner.

PART 2 - PRODUCTS

2.1 ACCEPTABLE MANUFACTURER'S – PAINT

A. Tnemec

B. Pittsburgh

C. Sherwin Williams

2.2 ACCEPTABLE MANUFACTURER'S - PRIMER SEALERS

A. Tnemec

B. Pittsburgh

C. Sherwin Williams

2.3 ACCEPTABLE MANUFACTURER'S - FIELD CATALYZED COATINGS

A. Tnemec

B. Pittsburgh

C. Sherwin Williams

2.4 MATERIALS

A. Coatings: Ready mixed, except field-catalyzed coatings. Process pigments to a soft paste consistency, capable of being readily and uniformly dispersed to a homogeneous coating.

B. Coatings: Good flow and brushing properties; capable of drying or curing free of streaks or sags.

C. Accessory Materials: Linseed oil, shellac, turpentine, paint thinners and other materials not specifically indicated but required to achieve the finish specified, of commercial quality.

PART 3 - EXECUTION

3.1 INSPECTION

A. Verify that surfaces and substrate conditions are ready to receive work as instructed by the product Manufacturer.

B. Examine surfaces scheduled to be finished prior to commencement of work. Report any condition that may potentially affect proper application.

3.2 PREPARATION

A. Remove electrical plates, hardware, light fixture trim, and fittings prior to preparing surfaces or finishing.

B. Correct minor defects and clean surfaces that affect work of this Section.

C. Shellac and seal marks which may bleed through surface finishes.

D. Impervious Surfaces: Remove mildew by scrubbing with solution of tri-sodium phosphate and bleach. Rinse with clean water and allow surface to dry.

E. Aluminum Surfaces Scheduled for Paint Finish: Remove oxidation with acid etch and solvent washing. Apply etching primer immediately following cleaning.

F. Asphalt, Creosote, or Bituminous Surfaces Scheduled for Paint Finish: Remove foreign particles to permit adhesion of finishing materials. Apply compatible sealer or primer.

G. Insulated Coverings: Remove dirt, grease, and oil from canvas and cotton.

H. Concrete Floors: Remove contamination, then acid etch and rinse floors with clear water. Verify required acid-alkali balance is achieved. Allow to dry.

I. Copper Surfaces Scheduled for a Paint Finish: Remove contamination by steam, high-pressure water, or solvent washing. Apply vinyl etch primer immediately following cleaning.

J. Copper Surfaces Scheduled for a Natural Oxidized Finish: Remove contamination by applying oxidizing solution of copper acetate and ammonium chloride in acetic acid. Rub on repeatedly for required effect. Once attained, rinse surfaces with clear water and allow to dry.

K. Galvanized Surfaces: Remove surface contamination and oils and wash with solvent. Apply coat of etching primer.

L. Concrete and Unit Masonry Surfaces Scheduled to Receive Paint Finish: Remove dirt, loose mortar, scale, salt or alkali powder, and other foreign matter. Remove oil and grease with a solution of tri-sodium phosphate; rinse well and allow to dry. Remove stains caused by weathering of corroding metals with a solution of sodium metasilicate after thoroughly wetting with water. Allow to dry.

M. Uncoated Steel and Iron Surfaces: Remove grease, scale, dirt, and rust. Where heavy coatings of scale are evident, remove by wire brushing or sandblasting; clean by washing with solvent. Apply a treatment of phosphoric acid solution, ensuring weld joints, bolts, and nuts are similarly cleaned. Spot prime paint after repairs.

N. Shop Primed Steel Surfaces: Sand and scrape to remove loose primer and rust. Feather edges to make touch-up patches inconspicuous. Clean surfaces with solvent. Prime bare steel surfaces.

3.3 PROTECTION

A. Protect elements surrounding the work of this Section from damage or disfiguration.

B. Repair damage to other surfaces caused by work of this Section.

C. Furnish drop cloths, shields, and protective methods to prevent spray or droppings from disfiguring other surfaces.

D. Remove empty paint containers from site.

3.4 APPLICATION

A. Apply products in accordance with Manufacturer's instructions.

B. Do not apply finishes to surfaces that are not dry.

C. Apply each coat to uniform finish.

D. Apply each coat of paint slightly darker than preceding coat unless otherwise approved.

E. Sand lightly between coats to achieve required finish.

F. Allow applied coat to dry before next coat is applied.

3.5 FINISHING MECHANICAL AND ELECTRICAL EQUIPMENT

A. Paint shop-primed equipment.

B. Prime and paint insulated and exposed pipes, conduit, boxes, insulated and exposed ducts, hangers, brackets, collars and supports, where items are refinished.

C. Replace identification markings on mechanical or electrical equipment when painted accidentally. Contractor shall paint junction box covers independently from conduit.

D. Paint exposed conduit and electrical equipment.

E. Replace electrical plates, hardware, light fixture trim, and fittings removed prior to finishing.

3.6 CLEANING

A. As work proceeds, promptly remove paint where spilled, splashed, or spattered.

B. During progress of work, maintain premises free of unnecessary accumulation of tools, equipment, surplus materials, and debris.

C. Collect cotton waste, cloths, and material which may constitute a fire hazard, place in closed metal containers and remove daily from site.

3.7 SCHEDULE - SHOP PRIMED ITEMS FOR SITE FINISHING

A. Valves

B. Tanks (Above ground)

3.8 SCHEDULE - EXTERIOR SURFACES

A. Steel – Unprimed:
   1. One coat universal primer
   2. Two coats alkyd enamel, semi-gloss

B. Steel - Shop Primed:
   1. Touch up with universal primer
   2. Two coats alkyd enamel, semi-gloss

C. Steel – Galvanized:
   1. One coat etching primer
   2. One coat universal primer

3. Two coats alkyd enamel, semi-gloss

D. Fiberglass Pipe:
1. Two coats as recommended by pipe supplier

E. Concrete:
1. One coat primer as recommended by paint supplier
2. Two coats alkyd enamel, semi-gloss

3.9 COLORS

A. Submit Manufacturers' color selection and schedule of items to be painted to Owner at the pre-construction meeting. Owner will select colors and notify Contractor.

3.10 Schedule – items

A. Tanks (Above Ground)

B. Valves

C. Pipe

D. Stairs and platforms

E. Exposed conduit, wireways, etc.

F. Guard post

G. Manhole covers (sump) and frames

H. Canopy

END OF SECTION

SECTION 10100

VISUAL DISPLAY BOARDS

PART 1 - GENERAL

1.1 SUMMARY

A. Section includes marker boards and tack boards.

B. Related Sections:
1. Section 06114 - Wood Blocking and Curbing: Wood grounds
2. Section 09111 - Non-Load-Bearing Metal Framing System

1.2 REFERENCES

A. American National Standards Institute:
1. ANSI A135.4 - Basic Hardboard
2. ANSI A208.1 - Mat-Formed Wood Particleboard

B. ASTM International:
1. ASTM A424 - Standard Specification for Steel, Sheet, for Porcelain Enameling
2. ASTM A653/A653M - Standard Specification for Steel Sheet, Zinc-Coated (Galvanized) or Zinc-Iron Alloy-Coated (Galvannealed) by the Hot-Dip Process
3. ASTM B209 - Standard Specification for Aluminum and Aluminum-Alloy Sheet and Plate
4. ASTM B221 - Standard Specification for Aluminum and Aluminum-Alloy Extruded Bars, Rods, Wire, Profiles, and Tubes
5. ASTM C36 - Standard Specification for Gypsum Wallboard
6. ASTM C208 - Standard Specification for Cellulosic Fiber Insulating Board
7. ASTM E84 - Standard Test Method for Surface Burning Characteristics of Building Materials

C. Federal Specification Unit:
1. FS CCC-W-408 - Wall Covering, Vinyl-Coated
2. FS L-P-1040 - Plastic Sheets and Strips (Polyvinyl Fluoride)

1.3 SUBMITTALS

A. Section 01330 - Submittal Procedures: Submittal procedures.

B. Shop Drawings: Indicate wall elevations, dimensions, joint locations, and special anchor details.

C. Product Data: Submit data on marker boards, tack boards, trim and accessories.

D. Samples: Submit illustrating materials and finish, color and texture of marker board and tack boards.

1.4 CLOSEOUT SUBMITTALS

A. Section 01700 - Execution Requirements: Closeout procedures.

B. Operation and Maintenance Data: Submit Operation and Maintenance Data.

1.5 QUALITY ASSURANCE

A. Conform to applicable code for flame/smoke rating of tack boards in accordance with ASTM E84.

1.6 QUALIFICATIONS

A. Manufacturer: Company specializing in manufacturing products specified in this section with minimum three years documented experience.

1.7 FIELD MEASUREMENTS

A. Verify field measurements prior to fabrication.

1.8 WARRANTY

A. Section 01700 - Execution Requirements: Product warranties and product bonds.

B. Special Warranty for Porcelain-Enamel Face Sheets: Manufacturer's standard form in which Manufacturer agrees to repair or replace porcelain-enamel face sheets that fail in materials or workmanship within specified warranty period.
   1. Failures include, but are not limited to, the following:
      a. Surfaces lose original writing and erasing qualities
      b. Surfaces become slick or shiny
      c. Surfaces exhibit crazing, cracking, or flaking.

C. Warranty Period: 50 years from date of Substantial Completion.

PART 2 - PRODUCTS

2.1 VISUAL DISPLAY BOARDS

A. Manufacturers:
   1. Best-Rite Chalkboard Co. Inc.
   2. Claridge Products and Equipment
   3. Substitutions: Section 01600 - Product Requirements.

2.2 COMPONENTS

A. Sheet Steel: ASTM A653/A653M,coating class G90 designation. ASTM A424, Type I, commercial quality.

B. Aluminum Sheet: ASTM B209, 6063 alloy, T52 temper.

C. Natural Cork Sheet: Seamless, single layer, compressed fine-grain cork sheet, bulletin board quality; face sanded for natural finish.

D. Particle Board: ANSI A208.1, grade 1-M-1 set with waterproof resin binder, sanded faces.

E. Foil Backing: Aluminum sheet.

F. Frame and Chalk rail: Aluminum extrusions, ASTM B221, 6063 alloy, T52 temper.

2.3 ACCESSORIES

A. Adhesives: Type used by Manufacturer.

B. Temporary Protective Cover: Sheet polyethylene.

C. Cleaning Instruction Plate: Provide instructions for chalkboard cleaning on metal plate fastened to perimeter frame near chalk rail.

D. Chalk tray: Manufacturer's standard, continuous.
1. Solid Type: Extruded aluminum with ribbed section and smoothly curved exposed ends.

E. Map Rail: Provide the following accessories:
1. Display Rail: Continuous and integral with map rail; fabricated from cork approximately 1 to 2 inches wide.
2. End Stops: Located at each end of map rail.
3. Map Hooks: Two map hooks for every 48 inches of map rail or fraction thereof.

2.4 FABRICATION

A. Outer Face Sheet: Steel, 22 gage thick.

B. Core: Particle board, ½ inch thick.

C. Outer Facing: Natural-Cork Tack Assembly: 1/4-inch- thick, natural cork sheet factory laminated to 3/8 inch- thick hardboard backing.

D. Backing Surface: Aluminum sheet, 0.015 inch thick.

E. Aluminum Frame: Of profile from Manufacturers standard full range; concealed fasteners, map rail with cork insert over marker board and tackboard surfaces.

F. Aluminum Chalk rail: Of profile from Manufacturer’s standard full range, one piece full length of chalkboard, molded closed ends; concealed fasteners.

2.5 FACTORY FINISHING

A. Porcelain Enamel: Glass fibered enamel, baked to vitreous surfaces; Porcelain Enamel Institute Type A; color to be selected by Architect.

B. Tackboard Surface: Natural light brown cork.

C. Aluminum Frame, Chalk rail, and Accessories: Mill finish natural aluminum. Fabricate units straight and of single lengths, keeping joints to a minimum. Miter corners to neat, hairline closure.

PART 3 - EXECUTION

3.1 EXAMINATION

A. Section 01300 - Administrative Requirements: Coordination and project conditions.

B. Verify internal wall blocking is ready to receive Work and positioning dimensions are as indicated on shop drawings and instructed by Manufacturer.

C. Verify flat wall surface for frameless adhesive applied type.

3.2 INSTALLATION

A. General: Install visual display surfaces in locations and at mounting heights indicated on Drawings, or if not indicated, at heights meeting ADA and TAS compliance. Keep perimeter lines straight, level, and plumb. Provide grounds, clips, backing materials, adhesives, brackets, anchors, trim, and accessories necessary for complete installation.

B. Field-Assembled Visual Display Units: Coordinate field-assembled units with grounds, trim, and accessories indicated. Join parts with a neat, precision fit.

C. Secure units level and plumb.

D. Marker boards and Tack boards: Butt panels tight with concealed spline to hairline joint.

3.3 CLEANING

A. Section 01700 - Execution Requirements: Final cleaning.

B. Clean visual display surfaces according to Manufacturer's written instructions. Attach one cleaning label to visual display surface in each room.

C. Cover chalkboard surfaces with protective cover, taped to frame.

D. Remove temporary protective cover at date of Substantial Completion.

3.4 SCHEDULES

A. Install boards in locations directed by Architect and Owner:
   1. VDB-1: Maintenance Crew:
      a. 8’ Wide Marker Board Unit.
   2. VDB-2: Conference Room:
      a. 12’ Wide Marker Board Unit.
   3. VDB-3: Conference Room:
      a. 12’ Wide Tackboard Unit.
   4. VDB-4: Meeting Room:
      a. 24’ Wide Marker Board/Tackboard Unit.
         1) 8’ Wide Marker Board centered with 8’ Tackboard on each side.

END OF SECTION

SECTION 10170

PLASTIC TOILET COMPARTMENTS

PART 1 - GENERAL

1.1 SUMMARY

A. Section includes solid plastic toilet compartments and urinal screen.

B. Related Sections:
1. Section 06114 – Carpentry Work: Concealed wood framing and blocking for compartment support
2. Section 10800 - Toilet, Bath, and Laundry Accessories

1.2 REFERENCES

A. ASTM International:
1. ASTM A666 - Standard Specification for Austenitic Stainless Steel Sheet, Strip, Plate, and Flat Bar.

1.3 SUBMITTALS

A. Section 01330 - Submittal Procedures: Submittal procedures.

B. Shop Drawings: Indicate partition plan, elevation views, dimensions, and details of wall, floor, and ceiling supports, door swings.

C. Product Data: Submit data on panel construction, hardware, and accessories.

D. Manufacturer's Certificate: Certify Products meet or exceed specified requirements.

E. Samples: Submit two 3 x 3 inch in size illustrating panel finish, color, and sheen.

F. Manufacturer's Installation Instructions: Submit special procedures and perimeter conditions requiring special attention.

1.4 CLOSEOUT SUBMITTALS

A. Section 01700 - Execution Requirements: Closeout procedures.

B. Operation and Maintenance Data: Submit recommended cleaning methods, cleaning materials, stain removal methods, and polishes and waxes.

1.5 COORDINATION

A. Section 01300 - Administrative Requirements: Coordination and project conditions.

B. Coordinate Work with placement of support framing and anchors in wall and ceiling.

PART 2 - PRODUCTS

2.1 SOLID PLASTIC TOILET COMPARTMENTS

A. Manufacturers:
1. Accurate Model Accurate Partitions
2. Global Steel Products Corporation model Global Polymer
3. Ampco Model Ampco Solid Plastic Polyethylene
4. Substitutions: Refer to Section 01600 - Material and Equipment.

B. Product Description: Floor mounted overhead braced toilet compartments, wall mounted urinal.

2.2 COMPONENTS

A. Toilet Compartments: High-Density polyethylene (HDPE) polymer - Solid molded plastic panels, doors, and pilasters, floor-mounted overhead head rail-braced and wall-hung.
1. Color: Single color as selected from Manufacturers' full color line.

B. Door and Panel Dimensions:
1. Thickness: 1 inch
2. Door Width: 24 inch
3. Accessible Door Width: 36 inch
4. Height: 58 inch
5. Thickness of Pilasters: 1-1/4 inch.

C. Urinal Screens: 24 x 42 inch - Wall mounted with panel brackets.

2.3 ACCESSORIES

A. Pilaster Shoe: Formed ASTM A666 Type 304 stainless steel with No. 4 finish, 4 inch high, concealing floor fastenings. Provide adjustment for floor variations with screw jack through steel saddles integral with pilaster.

B. Head Rails: Hollow anodized aluminum tube, 1 x 1-5/8 inch size, with cast socket wall brackets.

C. Brackets: anodized aluminum, to color as selected.

D. Attachments, Screws, and Bolts: Stainless steel.
1. For attaching panels and pilasters to brackets: Through-bolts and nuts.

E. Hardware: chrome plated non-ferrous cast metal: Furnish hardware to comply with ANSI A117.1 and Title III of the Americans with Disabilities Act (ADA) as follows:
   1. Hinges: Supply two heavy duty extruded satin anodized Type 6463-T5 aluminum hinges (three hinges for door widths exceeding 26"). Hinges shall wrap around stile and door components, be reinforced with steel supports, and be fully adjustable for door positioning. All hardware mounted with theft resistant thru-bolts.
   2. Nylon bearings.
   3. Latch and Keeper: Heavy duty extruded satin anodize Type 6463-T5 aluminum slide latch and keeper with emergency release.
   4. Coat Hook: Cast chrome plated non-ferrous metal coat hook (O/S) and/or combination hook bumper (I/S).
   5. Door Pull: Heavy duty cast satin anodized aluminum.
   6. Coat hook with rubber bumper; one for each compartment, mounted on panel.
   7. Furnish door pull for outswinging doors.
   8. Furnish metal heat sink at bottom of doors and partitions.

PART 3 - EXECUTION

3.1 EXAMINATION

A. Section 01300 - Administrative Requirements: Coordination and project conditions.

B. Verify field measurements are as indicated on shop drawings.

C. Verify correct spacing of and between plumbing fixtures.

D. Verify correct location of built-in framing, anchorage, and bracing.

3.2 INSTALLATION

A. Maintain 3/8 to 1/2 inch space between wall and panels and between wall and end pilasters.

B. Attach panel brackets securely to walls using anchor devices.

C. Attach panels and pilasters to brackets. Locate head rail joints at pilaster center lines.

D. Field touch-up of scratches or damaged finish will not be permitted. Replace damaged or scratched materials with new materials.

3.3 ERECTION TOLERANCES

A. Section 01400 - Quality Requirements: Tolerances.

B. Maximum Variation From Indicated Position: 1/4 inch.

C. Maximum Variation From Plumb: 1/8 inch.

3.4 ADJUSTING AND CLEANING

A. Section 01700 - Execution Requirements: Testing, adjusting, and balancing.

B. Adjust and align hardware to uniform clearance at vertical edge of doors, not exceeding 3/16 inch.

C. Adjust adjacent components for consistency of line or plane.

D. Hardware Adjustment: Adjust and lubricate hardware for proper operation. Set hinges on in-swing doors to hold open approximately 30 degrees from closed position when unlatched. Set hinges on out-swing doors (and entrance swing doors) to return to fully closed position.

E. Clean and Protect: Clean exposed surfaces of compartment systems using materials and methods recommended by Manufacturer, and provide protection as necessary to prevent damage during remainder of construction period.

END OF SECTION

SECTION 10200

LOUVERS & VENTS

PART 1 - GENERAL

1.1 SUMMARY

A. Section Includes: Metal wall louvers and screens exposed to view in finish work, including:
   1. Exterior metal louvers
   2. Louvers at locations where HVAC ductwork terminates at exterior walls
   3. Other exposed exterior and interior louvers indicated on Drawings

B. Extent: Extent of exterior louvers is shown on architectural drawings. Coordinate requirements, quantities and sizes with mechanical drawings. Louvers not shown on architectural drawing, but indicated on mechanical drawings shall be provided as part of work of this section.

C. Related Sections: Section(s) related to this section include:
   1. Sealant and Caulking: Division 7 Joint Treatment Section
   2. Dampers and Ductwork: Division 15 Dampers and Ductwork Sections
   3. Grilles and Registers: Division 15 Grilles and Registers Sections

1.2 REFERENCES

A. General: Standards listed by reference, including revisions by issuing authority, form a part of this specification section to extent indicated. Standards listed are identified buy issuing authority, authority abbreviation, designation number, title, or other designation established by issuing authority. Standards subsequently referenced herein are referred to by issuing authority abbreviation and standard designation.

B. American Society for Testing and Materials (ASTM):
   1. ASTM B209 - Specification for Aluminum and Aluminum-Alloy Sheet and Plate
   2. ASTM B221 - Specification for Aluminum and Aluminum-Alloy Extruded Bars, Rods, Wire, Shapes, and Tubes.

C. Air Movement and Control Association (AMCA):
   1. AMCA Standard 500 - Test Method for Louvers, Dampers, and Shutters
   2. AMCA Publication 261 - Directory of Licenses Products, current edition.

D. Sheet Metal and Air Condition Contractors National Association (SMACNA)
   1. SMACNA - Architectural Sheet Metal Manual, current edition.

E. American Architectural Manufacturer's Association (AAMA):

1. AAMA Standard 605 - Voluntary Specification for High Performance Organic Coating on Architectural Extrusions and Panels.

1.3 SYSTEM DESCRIPTION

A. Performance Requirements: Provide louvers, which have been manufactured, fabricated and installed to withstand loads from International Building Code – 2007 and to maintain performance criteria stated by Manufacturer without defects, damage, or failure.

B. Louver Performance: where louvers are indicated to comply with specific performance requirements, provide units whose performance ratings have been determined in compliance with Air Movement and Control Association (AMCA) Standard 500.

1.4 SUBMITTALS

A. General: Submit listed submittals in accordance with Conditions of the Contract and Division 1 Submittal Procedures section.

B. Product Data: Submit product data sheet for specified products.
1. Performance Certificates: Submit performance certification, if not included in product data

C. Shop Drawings: Submit shop drawings showing layout, profiles and product components, including anchorage, accessories, finish colors, patterns and textures.
1. Include information necessary for fabrication and installation of louvers. Indicate materials, sizes, thickness, fastenings and profiles.

D. Quality Assurance Submittals: Submit the following:
1. Test Reports: Certified test reports showing compliance with specified performance characteristics and physical properties.
    a. Submit certified test results from an approved testing laboratory showing that the louvers proposed meet the criteria specified herein.
2. Certificates: Product certificates signed by Manufacturer certifying materials comply with specified performance characteristics and criteria, and physical requirements.

1.5 DELIVERY, STORAGE & HANDLING

A. General: Comply with Division 1 Product Requirements Sections.

B. Ordering: Comply with Manufacturer’s ordering instructions and lead-time requirements to avoid construction delays.

C. Delivery: Deliver materials in Manufacturer's original, unopened, undamaged containers with identification labels intact.
   1. Deliver, store and handle products to avoid any distortion or damage due to moisture, physical abuse or other cause Louvers shall be free from nicks, scratches and blemishes. Replace defective or damaged materials with new.

1.6 PROJECT CONDITIONS

A. Field Measurements: Verify actual measurements/openings by field measurements before fabrication; show recorded measurements on shop drawings. Coordinate field measurements and fabrication schedule with construction progress to avoid construction delays.

1.7 WARRANTY

A. Project warranty refers to Conditions of the Contract for project warranty provisions. Manufacturer's Warranty: Submit, for Owner's acceptance, Manufacturer's standard warranty document executed by authorized company official. Manufacturer's warranty is in addition to, and not a limitation of, other rights owner may have under Contract Documents.

PART 2 - PRODUCTS

2.1 WALL LOUVERS

A. Manufacturers:
   1. Industrial Louvers Inc. (ILI)
   2. Airline Products Company. (APC)
   3. Ruskin Company (RC).

2.2 LOUVER ACCESSORIES

A. Exterior Aluminum Sill: Provide sill flashing of same material and finish as louvers where indicated on the drawings.

B. Louver Screens: Provide framed removable screens for exterior louvers.
   1. Screens shall be 1/8" (12.7 mm) mesh .063" (1.6 mm) aluminum wire mounted in extruded aluminum re-wireable frames.
   2. Locate screens on inside face of louvers.
   3. Screen frames shall have welded corners and be secured to the louver frame with machine screws, at each corner and at 12" (304.8 mm) c.o. between.

2.3 MATERIALS

A. Aluminum Sheet: ASTM B209 Alloy 3003 or 5005 with temper as required for forming, or as otherwise recommended by metal producer to provide required finish.

B. Aluminum Extrusions: ASTM B221, Alloy 6063.

C. Fastenings: Provide stainless steel screws and fasteners for aluminum louvers and zinc-coated or stainless steel screws and fasteners for steel louvers. Provide other accessories as required for complete and proper installation.

2.4 FABRICATION

A. Fabrication Requirements:
   1. Performance: Fabricate as required for optimum performance with respect to water penetration, strength, durability and uniform appearance.
   2. Size:
      a. Fabricate louvers in masonry walls to outside dimensions indicated, with allowance of 1/4” on each side for sealant joints.
      b. Verify sizes with final HVAC shop drawings, including detail dimensions of ductwork, dampers or other fittings abutting louvers.
   3. Field Measurements: Verify size, location and placement of louver units prior to fabrication.
   4. Shop Assembly:
      a. Fabricate to minimize field adjustments, splicing, mechanical joints and field assembly of units.
      b. Preassemble units in shop to greatest extent possible and disassemble as necessary for shipping and handling.
      c. Clearly mark units for reassemble and coordinated installation.
   5. Accessories: Include supports, anchorages and accessories required for complete assembly.
   6. Vertical Mullions: Provide vertical mullions of type and spacing indicated but not further apart than recommended by the Manufacturer.
   7. Horizontal Mullions: Provide horizontal mullions at horizontal joints between louver units except where continuous vertical assemblies are indicated.
   8. Connections: Join frame and blade members to one another by welding, except where field bolted connections between frame members are made necessary by size of louvers.
   9. Spacing: Maintain equal blade spacing to produce uniform appearance.

2.5 FINISHES (FACTORY)

A. Shop Finishing: Factory finish louvers and accessories with an organic coating.
   1. Organic Coating: Clean and prime exposed aluminum surfaces and apply a Kynar 500/Hylar 500 2-coat finish conforming to AAMA 605 in a

standard color to match building metal siding. Minimum dry film thickness shall be 1.2 mil.

B. Finish Protection: Provide finish protection as recommended by louver Manufacturer.

PART 3 - EXECUTION

3.1 MANUFACTURER'S INSTRUCTIONS

A. Compliance: Comply with Manufacturer's product data, including product technical bulletins, product catalog installation instructions, and product carton instructions for installation.

3.2 EXAMINATION

A. Site Verification of Conditions: Verify substrate conditions, which have been previously installed under other sections, are acceptable for product installation in accordance with Manufacturer's instructions.

3.3 INSTALLATION

A. Louver Installation:
1. Louvers shall be installed in accordance with Manufacturers approved shop drawings and as shown. Provide all necessary fastenings and anchors required to a complete installation. Units to be installed plumb, level and in proper alignment with adjacent work.
2. Form tight joints within work of this Section. Fit exposed connections accurately.
3. Louvers shall be protected from damage from subsequent building operations.
4. Protect metal surfaces from corrosion or galvanic action by application of a heavy coating of bituminous paint on surfaces, which shall be in contact with concrete, masonry or dissimilar metals.

END OF SECTION

SECTION 10350

FLAGPOLES

PART 1 - GENERAL

1.1 SUMMARY

A. Section includes flagpoles and accessories.

B. Related Sections:
1. Section 03300: Concrete base and foundation construction.

1.2 REFERENCES

A. ASTM International:
1. ASTM A53/A53M - Standard Specification for Pipe, Steel, Black and Hot-Dipped, Zinc-Coated, Welded and Seamless
2. ASTM A123/A123M - Standard Specification for Zinc (Hot-Dip Galvanized) Coatings on Iron and Steel Products
3. ASTM B221 - Standard Specification for Aluminum and Aluminum-Alloy Extruded Bars, Rods, Wire, Profiles, and Tubes
4. ASTM B241/B241M - Standard Specification for Aluminum and Aluminum-Alloy Seamless Pipe and Seamless Extruded Tube.

B. Copper Development Association Inc.:
1. CDA - Cooper Brass Bronze Design Handbook: Architectural Applications.

1.3 PERFORMANCE REQUIREMENTS

A. Flagpole With Flag Flying: Resistant without permanent deformation to 120 miles/hr wind velocity; non-resonant, safety design factor of 2.5.

B. Flagpole Without Flag: Resistant without permanent deformation to 120 miles/hr wind velocity; non-resonant, safety design factor of 2.5.

1.4 SUBMITTALS

A. Section 01330 - Submittal Procedures: Submittal procedures.

B. Shop Drawings: Indicate detailed dimensions, base or attachment details, anchor requirements, and imposed loads.

C. Shop Drawings: Indicate details of foundation system for ground-set flagpoles.

D. Product Data: Submit data on pole, accessories, and configurations.

E. Samples: Submit two 5 x 5 inch in size illustrating pole material, color, and finish.

1.5 CLOSEOUT SUBMITTALS

A. Section 01700 - Execution Requirements: Closeout procedures.

B. Operation and Maintenance Data: Submit Operation and Maintenance Data.

1.6 QUALITY ASSURANCE

A. Source Limitations: Obtain each flagpole as a complete unit, including fittings, accessories, bases, and anchorage devices, from a single Manufacturer.
   1. Obtain through one source from a single Manufacturer.

1.7 QUALIFICATIONS

A. Design flagpole foundation under direct supervision of Professional Engineer experienced in design of this Work and licensed in State of Texas.

1.8 DELIVERY, STORAGE, AND HANDLING

A. Section 01600 - Product Requirements: Product storage and handling requirements.

B. Spiral wrap flagpole with protective covering and pack in protective shipping tubes or containers.

C. Protect flagpole and accessories from damage or moisture.

PART 2 - PRODUCTS

2.1 FLAGPOLES

A. Manufacturers:
   1. American Flagpole Model
   2. Baartol Co., Inc. Model
   3. Concord Industries, Inc.
   4. Morgan-Francis Pole Model
   5. Substitutions: Section 01600 - Product Requirements.

B. Product Description: Pole Without Flag: Resist without permanent deformation, 120 miles/hr. wind velocity, non-resonant and per local code requirements.

2.2 COMPONENTS

A. Aluminum: ASTM B241/B241M, ASTM B221, 6063 alloy, T6 temper.

B. Outside Butt Diameter: 6 inches.

C. Outside Tip Diameter: 3 inches.

D. Nominal Wall Thickness: .188 inch.

E. Nominal Height: 30ft; measured from top of base.

F. Flagpole: Ground mounted type.

G. Flagpole Design: Cone tapered

H. Halyard: Interior type.

2.3 ACCESSORIES

A. Finial Ball: Aluminum, 6 inch diameter.

B. Truck Assembly: Concealed, Cast aluminum; revolving, stainless steel ball bearings, non-fouling.

C. Flag: 3 x 5 design size, fabric, owner provided.

D. Internal Halyard, Winch System: Manually operated winch with control stop device and removable handle, and stainless-steel cable halyard. Provide flush access door secured with cylinder lock.

E. Halyard Flag Snaps: Provide two chromium-plated bronze swivel snap hooks per halyard.
1. Provide with neoprene or vinyl covers.

F. Primer: Zinc rich type.

G. Hand Crank Operator: Removable type.

H. Foundation Tube Sleeve: Corrugated 16 gage steel, galvanized, depth as required by design and per Manufacturer requirements.

I. Pole Base Attachment: Sleeve; aluminum base with base cover.

J. Lighting Ground Rod: 36 inch long copper rod, 3/4 inch diameter.

K. Lightning Ground Cable: Copper No. 6 AWG, soft drawn.

L. Sand: ASTM C 33, fine aggregate.

2.4 FACTORY FINISHING

A. Metal Surfaces in Contact With Concrete: Asphaltic paint.

B. Aluminum: Mill finish, Natural Satin. Anodized to clear color.

C. Finial: Gold anodized finish.

PART 3 - EXECUTION

3.1 EXAMINATION

A. Section 01300 - Administrative Requirements: Coordination and project conditions.

B. Verify concrete foundation is ready to receive work and dimensions are as indicated on shop drawings.

3.2 PREPARATION

A. Coat metal sleeve surfaces below grade, in contact with cementitious surfaces, and in contact with dissimilar metals with asphaltic paint.

3.3 INSTALLATION

A. Install flagpole, base assembly, and fittings in accordance with Manufacturer's instructions and shop drawings.

B. Electrically ground flagpole installation.

C. Install foundation plate and centering wedges for flagpole base set in concrete base and fasten. Fill foundation tube sleeve with sand and compact.

D. Set aluminum flash collar in bed of polyurethane sealant.

3.4 ERECTION TOLERANCES

A. Section 01400 - Quality Requirements: Tolerances.

B. Maximum Variation From Plumb: 1 inch.

3.5 ADJUSTING

A. Section 01700 - Execution Requirements: Testing, adjusting, and balancing.

B. Clean surfaces.

C. Adjust operating devices so halyard and flag function smoothly.

END OF SECTION

SECTION 10440

INTERIOR SIGNAGE

PART 1 - GENERAL

1.1 SUMMARY

A. Section includes interior signs.

B. Related Sections:
1. Section 15075 - Mechanical Identification.

1.2 REFERENCES

A. Standards of the following as referenced:
1. American National Standards Institute (ANSI).

B. Industry standards:
1. Department of Justice, Office of the Attorney General, "Americans with Disabilities Act", Public Law 101-336, (ADA)
2. ANSI A117.1: Providing Accessibility and Useability for Physically Handicap People, 1986 edition
3. Federal Register Part III, Department of Justice, Office of the Attorney General, 28 CFR Part 36: Nondiscrimination on the Basis of Disability by Public Accommodations and in Commercial Facilities, Final Rule, July 26, 1991
4. Federal Register Part II, Architectural and Transportation Barriers Compliance Board, 36 CFR Part 1191: Americans with Disabilities Act (ADA) Accessibility Guidelines for Buildings and Facilities; Amendment to Final Guidelines, September 6, 1991.

1.3 SUBMITTALS

A. Section 01330 - Submittal Procedures: Submittal procedures.

B. Shop Drawings: Indicate sign styles, lettering font, foreground and background colors, locations, overall dimensions of each sign.

C. Samples: Submit two signs, in size illustrating type, style, letter font, and colors specified; method of attachment.

D. Manufacturer's Installation Instructions: Submit installation template and attachment devices.

1.4 QUALITY ASSURANCE

A. Provide products of acceptable Manufacturers that have been in satisfactory use in similar service for three years. Use experienced installers.

B. Deliver, handle, and store materials in accordance with Manufacturer's instructions.

C. Comply with governing codes and regulations.

D. Regulations: ADAAG / TAS (Texas Accessibility Standards)

1.5 DELIVERY, STORAGE, AND HANDLING

A. Section 01600 - Product Requirements: Product storage and handling requirements.

B. Package signs, labeled in name groups.

C. Store adhesive attachment tape at ambient room temperatures.

1.6 ENVIRONMENTAL REQUIREMENTS

A. Section 01600 - Product Requirements: Environmental conditions affecting products on site.

B. Do not install signs when ambient temperature is lower than recommended by Manufacturer.

C. Maintain this minimum temperature during and after installation of signs.

PART 2 - PRODUCTS

2.1 INTERIOR SIGNS

A. Manufacturers:
1. APCO Graphics
2. ASI Sign Systems
3. Corpus Christi Stampworks
4. Best Signs
5. Substitutions: Section 01600 - Product Requirements.

2.2 COMPONENTS

A. Injection Molded Signs: Acrylic plastic:
1. Sign Color: Color as selected from Manufacturers full range of colors
2. Character Color: Contrasting color
3. Total Thickness: 1/8 inch
4. Height: 3 inches
5. Edges: Beveled
6. Character Font: Helvetica.

B. Raised Letter Signs, Base Material: Solid color acrylic plastic:
   1. Total Thickness: 1/8 inch
   2. Height: 3 inches
   3. Edges: Beveled
   4. Character Font: Helvetica.

C. Raised Character Size and Style: Acrylic plastic, character adhered to base material:
   1. Character Color: White
   2. Character Thickness: 1/8 inch
   3. Edges: Beveled
   4. Character Font: Helvetica
   5. Character Case: Upper case.

D. Graphic Style: Handicapped type.

2.3 ACCESSORIES

A. Mounting Hardware: Per Manufacturers standard

PART 3 - EXECUTION

3.1 EXAMINATION

A. Section 01310 - Project Management and Coordination: Verification of existing conditions before starting Work.

3.2 INSTALLATION

A. Install signs after surfaces are finished, in locations scheduled. Install signage holders in locations with mounting types indicated in accord with reviewed shop drawings. Square, plumb, and level units.

B. Install materials and systems in proper relation with adjacent construction and with uniform appearance. Coordinate with work of other sections.

C. Position strike side of door; level. Conform to ADA requirements for tactile graphics signage.

3.3 CLEANING

A. Clean exposed surfaces not more than 48 hours prior to Date of Substantial Completion in accord with Manufacturers written cleaning instructions.

3.4 SCHEDULES

A. Service Room Signs: Plaque signs, 3 inches high, face color, core color, "CONFERENCE ROOM", “MEN”, “WOMEN”, “TELEPHONE/COMMUNICATIONS ROOM”, "STORAGE ROOM", and "ELECTRICAL ROOM"; at each respective room location.

B. Rest Room Door Graphic: 6 inches high, "male" and "female" graphic image; color, located on each rest room door.

END OF SECTION

SECTION 10500

LOCKERS

PART 1 - GENERAL

1.1 SUMMARY

A. Section includes metal lockers, accessories and locker benches.

B. Related Sections:
1. Section 06114 - Wood Blocking and Curbing: Wood grounds and attachment strips.

1.2 REFERENCES

A. ASTM International:
1. ASTM A653/A653M - Standard Specification for Steel Sheet, Zinc-Coated (Galvanized) or Zinc-Iron Alloy-Coated (Galvannealed) by the Hot-Dip Process.

1.3 SUBMITTALS

A. Section 01330 - Submittal Procedures: Submittal procedures.

B. Shop Drawings: Include plans, elevations, sections, details, and attachments to other work.
1. Show base, sloping tops, filler panels and other accessories.
2. Include locker identification system

C. Product Data: Submit data on locker types, sizes, accessories and installation instructions.

D. Samples: Submit two 3 x 6 inches in size, of each color selected; applied to specified base metal.
1. Samples for Initial Selection: For units with factory-applied color finishes.

E. Manufacturer's Installation Instructions: Installation instructions, submit installation template and attachment devices.

F. Maintenance Data: For adjusting, repairing, and replacing locker doors and latching mechanisms to include in maintenance manuals.

G. Warranty: Special warranty specified in this Section.

1.4 QUALITY ASSURANCE

A. Installer Qualifications: An authorized representative of metal locker Manufacturer for installation and maintenance of units required for this Project.

B. Source Limitations: Obtain metal lockers and accessories through one source from a single Manufacturer.

C. Product Options: Drawings indicate size, profiles, and dimensional requirements of metal lockers and are based on the specific system indicated. Refer to Division 1 Section "Product Requirements."
   1. Do not modify intended aesthetic effects, as judged solely by Architect, except with Architect's approval. If modifications are proposed, submit comprehensive explanatory data to Architect for review.

D. Regulatory Requirements: Where metal lockers are indicated to comply with accessibility requirements, comply with the U.S. Architectural & Transportation Barriers Compliance Board's "Americans with Disabilities Act (ADA), Accessibility Guidelines for Buildings and Facilities (ADAAG)". Comply with Texas Accessibility Standards (TAS) Guidelines.
   1. Provide not less than 1 shelf located no higher than 48 inches above the floor for forward 54 inches above the floor for side reach.
   2. Provide 1 shelf located at bottom of locker no lower than 15 inches above the floor for forward 9 inches above the floor for side reach.
   3. Provide hardware that does not require tight grasping, pinching, or twisting of the wrist, and that operates with a force of not more than 5 lbf.

1.5 WARRANTY

A. Special Warranty: Manufacturer's standard form in which Manufacturer agrees to repair or replace components of metal lockers that fail in materials or workmanship, excluding finish, within specified warranty period.
   1. Failures include, but are not limited to, the following:
      a. Structural failures.
      b. Faulty operation of latches and other door hardware.
   2. Damage from deliberate destruction and vandalism is excluded.

B. Warranty Period for Metal Lockers: Two years from date of Substantial Completion.

1.6 EXTRA MATERIALS

A. Furnish extra materials described below, before construction begins, that match products installed and that are packaged with protective covering for storage and identified with labels describing contents.
   1. Full-size units of the following metal locker hardware items equal to 10 percent of amount installed for each type and finish installed, but no fewer than 5 units:
      a. Identification plates.
      b. Hooks.

1.7 DELIVERY, STORAGE, AND PROTECTION

A. Section 01600 - Product Requirements: Product storage and handling requirements.

B. Protect locker finish and adjacent surfaces from damage.

PART 2 - PRODUCTS

2.1 LOCKERS

A. Manufacturers:
1. List Industries, Inc.
2. Lyon Metal Products, Inc.
3. Penco Products, Inc.
4. Republic Storage Systems Co., Inc.
5. Substitutions: Section 01600 - Product Requirements.

B. Product Description: Lockers, Free standing full height double tier lockers; with metal base; with sloped tops; and padlock hasps.

2.2 COMPONENTS

A. Sheet Steel: ASTM A653/A653M, commercial quality, coating class G90, stretcher leveled; to the following minimum thicknesses:
1. Body and Shelf: 16 gage inch
2. Door Outer Face: 16 gage inch
3. Door Inner Face: 20 gage inch
4. Door Frame: 16 gage inch
5. Hinges: 14 gage inch
6. Base: 12 gage inch
7. Sloping Top: 20 gage inch
8. Trim: 20 gage inch.

2.3 ACCESSORIES

A. For Each Locker: Three single prong wall hooks and one ceiling double prong hook.

B. Locker Benches: Stationary type; bench top of laminated red oak species wood, stained, sealed and varnished; pedestals of brushed chrome steel, 19 inches high.
1. ADA bench: 24” x 48” with four pedestals
2. Shower bench: 9” x 48” on pedestals.

2.4 FABRICATION

A. Locker Units:
1. Width: 12 inches
2. Depth: 15 inches
3. Height: 72 inches

4. Configuration: double tier
5. Mounting: Free standing
6. Base: Metal base to be mounted on concrete base
7. Base Height: 4 inch
8. Top: Sloped metal with closures
9. Locking: Equipped for padlock hasps
10. Ventilation Method: Louvered top and bottom frame and top and bottom of door
11. Type: Conventional.

B. Locker Body: Formed and flanged; with steel stiffener ribs; electric spot welded.

C. Frames: Formed channel shape, welded and ground flush, welded to body, resilient gaskets and latching for quiet operation.

D. Doors: Hollow channel construction, 1-3/16 inch thick; welded construction, channel reinforced top and bottom with intermediate stiffener ribs, grind and finish edges smooth.

E. Hinges: Two for doors under 42 inches high; three for doors over 42 inches high; weld securely to locker body and door.

F. Locking device supplied by Owner.

G. Number Plates: Furnish rectangular shaped aluminum plates. Form numbers ½" inch high of block font style, in contrasting color.

H. Furnish ventilation openings at top and bottom of each locker.

I. Form recess for operating handle and locking device.

J. Finish edges smooth without burrs.

K. Fabricate sloped metal tops, ends and closure pieces.

L. Furnish end panels and filler strips.

M. Fabricate 4 inch high steel bases with end closures.

2.5 FACTORY FINISHING

A. Clean, degrease, and neutralize metal; prime and finish with two coats of baked enamel.

B. Paint locker units of 1 color throughout.

C. Color: color as selected from Manufacturer's standard range.

PART 3 - EXECUTION

3.1 EXAMINATION

A. Section 01300 - Administrative Requirements: Coordination and project conditions.

B. Take site dimensions affecting this work

C. Verify that field measurements are as indicated on shop drawings.

D. Verify prepared bases are in correct position and configuration.

E. Verify bases and embedded anchors are properly sized.

3.2 INSTALLATION

A. Install lockers plumb and square.

B. Place and secure on prepared base.

C. Secure lockers with anchor devices to suit substrate materials. Secure both to wall and to base.

D. Bolt adjoining locker units together to provide rigid installation.

E. Install end panels, filler panels, sloped tops, and bases. Utilize concealed fasteners.

F. Install accessories.

G. Replace components not operating smoothly.

H. Protect metal lockers from damage, abuse, dust, dirt, stain, or paint.

I. Do not permit metal locker use during construction.

3.3 CLEANING

A. Section 01700 - Execution Requirements: Final cleaning.

B. Clean locker interiors and exterior surfaces.

END OF SECTION

SECTION 10523

FIRE EXTINGUISHERS AND CABINETS

PART 1 - GENERAL

1.1 SUMMARY

A. Section includes fire extinguishers; fire blankets; fire extinguisher cabinets; and brackets for wall mounting.

B. Related Sections:
1. Section 06114 - Wood Blocking and Curbing: Wood blocking and shims
2. Section 09900 - Paints and Coatings: Field applied paint finish

1.2 REFERENCES

A. National Fire Protection Association:
1. NFPA 10 - Standard for Portable Fire Extinguishers.

B. Underwriters Laboratories Inc.:
1. UL - Fire Protection Equipment Directory.

1.3 PERFORMANCE REQUIREMENTS

A. Conform to NFPA 10 and applicable code.

B. Provide extinguishers classified and labeled by Underwriters Laboratories Inc. for purpose specified and indicated.

C. Provide fire extinguisher cabinets classified and labeled by Underwriters Laboratories Inc. for purpose specified and indicated.

1.4 SUBMITTALS

A. Section 01330 - Submittal Procedures: Submittal procedures.

B. Shop Drawings: Indicate cabinet physical dimensions, rough-in measurements for recessed cabinets, locations, and fire ratings.

C. Product Data: Submit extinguisher operational features, color and finish, and anchorage details.

D. Manufacturer's Installation Instructions: Submit special criteria and wall opening coordination requirements.

E. Manufacturer's Certificate: Certify Products meet or exceed specified requirements.

1.5 CLOSEOUT SUBMITTALS

A. Section 01700 - Execution Requirements: Closeout procedures.

B. Operation and Maintenance Data: Submit test, refill or recharge schedules and re-certification requirements.

1.6 ENVIRONMENTAL REQUIREMENTS

A. Section 01600 - Product Requirements: Environmental conditions affecting products on site.

B. Do not install extinguishers when ambient temperature is capable of freezing extinguisher ingredients.

PART 2 - PRODUCTS

2.1 FIRE EXTINGUISHERS

A. Manufacturers:
1. Larsen's Manufacturing Co. Model MP Series MP10
2. J. L. Industries Model Cosmic
3. Substitutions: Section 01600 - Product Requirements.

B. Dry Chemical Type: Cast steel tank, with pressure gage; Class A, B, C, Size 10 size and classification as scheduled.

C. Extinguisher Finish: Steel, enamel to color as selected.

2.2 FIRE EXTINGUISHER CABINETS (FEC)

A. Manufacturers:
1. Larsons Model Occult Series, O-2409
2. J. L. Industries Model Academy
3. Substitutions: Section 01600 - Product Requirements.

B. Metal: Formed sheet steel, galvanized; 0.036 inch thick base metal.

C. Configuration: Semi-recessed type, sized to accommodate accessories exterior nominal dimensions of inch 10 wide x 24 inch high x 6 inch deep.

D. Trim Type: Returned to wall surface, with 2 ½" inch projection, ¾" inch trim wide face.

E. Aluminum Door, Solid type: Reinforced for flatness and rigidity; clear, satin finish.

F. Cabinet Mounting Hardware: Appropriate to cabinet.

G. Form cabinet enclosure with right angle inside corners and seams. Form perimeter trim.

H. Pre-drill for anchors.

I. Hinge doors for 180 degree opening with continuous piano hinge. Furnish roller type catch.

J. Weld, fill, and grind components smooth.

K. Finishing Cabinet Exterior Trim and Door: Clear Anodized, satin finish with Diecut lettering (black letters) with Vertical lettering style.

L. Finishing Cabinet Interior: white, baked enamel.

2.3 ACCESSORIES

A. Graphic Identification: FIRE EXTINGUISHER.

2.4 MOUNTING BRACKETS (FEB)

A. Mounting Brackets: Manufacturer's standard galvanized steel, designed to secure fire extinguisher to wall or structure, of sizes required for types and capacities of fire extinguishers indicated, with plated or baked-enamel finish.
   1. Color: Red.

B. Identification: Lettering complying with authorities having jurisdiction for letter style, size, spacing, and location. Locate as indicated by Architect.
   1. Identify bracket-mounted fire extinguishers with the words "FIRE EXTINGUISHER" in red letter decals applied to mounting surface.
      a. Orientation: Vertical Horizontal.

PART 3 - EXECUTION

3.1 EXAMINATION

A. Section 01300 - Administrative Requirements: Coordination and project conditions.

B. Verify rough openings for cabinet are correctly sized and located.

C. Examine walls and partitions for suitable framing depth and blocking where semi-recessed cabinets will be installed.

D. Examine fire extinguishers for proper charging and tagging.
   1. Remove and replace damaged, defective, or undercharged units.

E. Proceed with installation only after unsatisfactory conditions have been corrected.

3.2 INSTALLATION

A. Prepare recesses for semi-recessed fire-protection cabinets as required by type and size of cabinet and trim style.

B. Install cabinets plumb and level in wall openings, 48 inches from finished floor to fire extinguisher handle. Verify and install according with most recent codes and regulations.

C. Fire-Protection Cabinets: Fasten fire-protection cabinets to structure, square and plumb.
   1. Unless otherwise indicated, provide semi-recessed fire-protection cabinets.
   2. Fasten mounting brackets to inside surface of fire-protection cabinets, square and plumb.
   3. Secure rigidly in place.

D. Place extinguishers and accessories in cabinets.

E. Mounting Brackets: Fasten mounting brackets to surfaces, square and plumb, at locations indicated.

3.3 ADJUSTING AND CLEANING

A. Remove temporary protective coverings and strippable films, if any, as fire-protection specialties are installed, unless otherwise indicated in Manufacturer's written installation instructions.

B. Adjust fire-protection cabinet doors to operate easily without binding. Verify that integral locking devices operate properly.

C. On completion of fire-protection cabinet installation, clean interior and exterior surfaces as recommended by Manufacturer.

D. Touch up marred finishes, or replace fire-protection cabinets that cannot be restored to factory-finished appearance. Use only materials and procedures recommended or furnished by fire-protection cabinet Manufacturer.

E. Replace fire-protection cabinets that have been damaged or have deteriorated beyond successful repair by finish touchup or similar minor repair procedures.

3.4 SCHEDULES

A. Place 4 cabinets and extinguishers (FEC) where directed by Architect / Engineer.

B. Place 6 brackets and extinguishers (FEB) where directed by Architect / Engineer.

END OF SECTION

SECTION 10800

TOILET ACCESSORIES

PART 1 - GENERAL

1.1 SUMMARY

A. Section includes toilet accessories; shower accessories; and utility room accessories.

B. Related Sections:
1. Section 06114: In-wall framing and plates for support of accessories
2. Section 09300 - Tile: Ceramic washroom accessories
3. Section 10170 - Plastic Toilet Compartments

1.2 REFERENCES

A. ASTM International:
1. ASTM A123/A123M - Standard Specification for Zinc (Hot-Dip Galvanized) Coatings on Iron and Steel Products
2. ASTM A269 - Standard Specification for Seamless and Welded Austenitic Stainless Steel Tubing for General Service
3. ASTM A653/A653M - Standard Specification for Steel Sheet, Zinc-Coated (Galvanized) or Zinc-Iron Alloy-Coated (Galvannealed) by the Hot-Dip Process
4. ASTM A666 - Standard Specification for Austenitic Stainless Steel Sheet, Strip, Plate, and Flat Bar
5. ASTM B456 - Standard Specification for Electrodeposited Coatings of Copper Plus Nickel Plus Chromium and Nickel Plus Chromium
6. ASTM C1036 - Standard Specification for Flat Glass.

B. Federal Specification Unit:
1. FS A-A-3002 - Mirrors, Glass.

1.3 SUBMITTALS

A. Section 01330 - Submittal Procedures: Submittal procedures.

B. Product Data: Submit data on accessories describing size, finish, details of function, attachment methods.
1. Construction details and dimensions
2. Anchoring and mounting requirements, including requirements for cutouts in other work and substrate preparation
3. Material and finish descriptions
4. Features that will be included for Project
5. Manufacturer's warranty.

C. Product Schedule: Indicating types, quantities, sizes, and installation locations by room of each accessory required. Utilize numbers indicated in toilet accessory schedule in this specification.
   1. Identify locations using room designations indicated on Drawings.
   2. Identify products using designations indicated on Drawings.

D. Manufacturer's Installation Instructions: Submit special procedures, conditions requiring special attention.

E. Maintenance Data: For toilet and bath accessories to include in maintenance manuals.

1.4 COORDINATION

A. Section 01300 - Administrative Requirements: Coordination and project conditions.

B. Coordinate the Work with placement of internal wall reinforcement and reinforcement of toilet partitions to receive anchor attachments.

1.5 WARRANTY

A. Special Mirror Warranty: Manufacturer's standard form in which Manufacturer agrees to replace mirrors that develop visible silver spoilage defects and that fail in materials or workmanship within specified warranty period.
   1. Warranty Period: 15 years from date of Substantial Completion.

PART 2 - PRODUCTS

2.1 TOILET AND BATH ACCESSORIES

A. Manufacturers:
   1. American Specialties, Inc. Model Traditional Collection
   2. Bobrick Washroom Accessories Model Classic Series
   3. Bradley Corp. Model Contemporary Series
   4. Substitutions: Section 01600 - Product Requirements.

2.2 COMPONENTS

A. Accessories - General: Shop assembled, free of dents and scratches and packaged complete with anchors and fittings, steel anchor plates, adapters, and anchor components for installation.
   1. Grind welded joints smooth
   2. Fabricate units made of metal sheet of seamless sheets, with flat surfaces.

B. Keys: Furnish keys for each accessory to Owner.

C. Stainless Steel Sheet: ASTM A 666, Type 304. Satin finish.

D. Stainless Steel Tubing: ASTM A269, stainless steel.

E. Mirror Glass: Float glass, Type I, Class 1, Quality q2 (ASTM C 1036), with silvering, copper coating, and suitable protective organic coating to copper backing in accordance with FS A-A-3002.

F. ABS Plastic: Acrylonitrile-butadiene-styrene resin formulation.

G. Adhesive: Two component epoxy type, waterproof.

H. Fasteners: Screws, bolts, and other devices of same material as accessory unit and tamper-and-theft resistant where exposed, and of galvanized steel where concealed.

I. Expansion Shields: Fiber, lead, or rubber as recommended by accessory Manufacturer for component and substrate.

2.3 TOILET ROOM ACCESSORIES

A. Toilet Paper Dispenser with Shelf: Double roll surface-mounted, dual side-by-side partition mounting, stainless steel unit with pivot hinge.
1. Product: B-2840 manufactured by Bobrick.

B. Combination Towel Dispenser/Waste Receptacle: Recessed with projecting waste receptacle, stainless steel; seamless wall flanges, continuous piano hinges.
1. Waste receptacle liner: Reusable, heavy-duty vinyl
2. Towel dispenser capacity: 600 C-fold or 800 multifold
3. Waste receptacle capacity: 12 gallons
4. Product: B-3942 manufactured by Bobrick.

C. Paper Towel Dispenser: Folded paper type, stainless steel, semi-recessed, with viewing slots on sides as refill indicator.
1. Capacity: 400 C-fold minimum
2. Product: B-262 manufactured by Bobrick.

D. Soap Dispenser: Liquid soap dispenser, wall-mounted, surface, for with cover and horizontal stainless steel tank and working parts; push type soap valve, check valve, and window gage refill indicator.
1. Minimum Capacity: 40 ounces
2. Product: B-40 manufactured by Bobrick.

E. Mirrors: Stainless steel framed, 6 mm thick tempered glass mirror.
1. Size: As indicated on Drawings
2. Frame: angle shapes, with mitered and welded and ground corners bright annealed finish
3. Backing: Full-mirror sized, minimum 0.03 inch galvanized steel sheet and nonabsorptive filler material
4. Product: B-290 3672 manufactured by Bobrick
5. Product: B-290 3624 manufactured by Bobrick

F. Grab Bars: Stainless steel, 1-1/2 inches outside diameter, minimum 0.05 inch wall thickness, nonslip grasping surface finish, concealed flange mounting; 1-1/2 inches clearance between wall and inside of grab bar.
   1. Length and configuration: As indicated on Drawings, comply with ADA and TAS requirements.
   2. Product: B-6806x36 and B-6806x42 manufactured by Bobrick.

G. Partition-Mounted Toilet Tissue Dispenser and Sanitary Napkin Disposal Unit: Stainless steel back-to-back partition mounting with adjustable flanges, self-closing door, locking bottom panel with full-length stainless steel piano-type hinge, removable receptacle.
   1. Product: B-3570 manufactured by Bobrick.

H. Tissue Dispenser and Sanitary Napkin Disposal Unit: Stainless steel, recessed, self-closing door, locking bottom panel with full-length stainless steel piano-type hinge, removable receptacle.
   1. Product: B-35701 manufactured by Bobrick.

I. Rod, Rings and Curtain: At each shower
   1. Bobrick: B-6107 Classic Series Extra-Heavy-Duty Shower Curtain Rod with 2 ½" Square Flange. Type-304 stainless steel, satin finish, 18-gauge
   2. Bobrick: 204-2 Vinyl Shower Curtain (42"W x 72" H)
   3. Bobrick: 204-1 Shower Curtain Hooks, seven (7) required per each shower curtain location.

J. Surface Mounted Hat, Coat, and Robe Hook: 1 each at each shower and at each bench.
   1. Bobrick: B-7671, Classic Series
   2. Type: Bright polished stainless steel.

K. Undercounter Lavatory Protective Enclosure
   1. Truebro, Inc.: Lav Shield, molded rigid vinyl, high impact stain resistant, white color.

2.4 UTILITY ROOM ACCESSORIES

A. Combination Utility Shelf/Mop and Broom Holder: 0.05 inch thick stainless steel, Type 304, with 1/2 inch returned edges, 0.06 inch steel wall brackets.
   1. Drying rod: Stainless steel, 1/4 inch diameter
   2. Hooks: 3, 0.06 inch stainless steel rag hooks at shelf front
   3. Mop/broom holders: 4 spring-loaded rubber cam holders at shelf front
   4. Length: 36 inches
   5. Length: Manufacturer's standard length for number of holders/hooks
   6. Product: B-224x36 manufactured by Bobrick.

2.5 FACTORY FINISHING

A. Stainless Steel: No. 4 satin brushed finish.

B. Back paint components where contact is made with building finishes to prevent electrolysis.

PART 3 - EXECUTION

3.1 EXAMINATION

A. Section 01300 - Administrative Requirements: Coordination and project conditions.

B. Verify exact location of accessories for installation.

C. Verify field measurements are as indicated on product data.

D. See Section 06100 for installation of blocking in walls and ceilings.

3.2 PREPARATION

A. Deliver inserts and rough-in frames to site for timely installation.

B. Provide templates and rough-in measurements as required.

3.3 INSTALLATION

A. Install accessories according to Manufacturers' written instructions, using fasteners appropriate to substrate indicated and recommended by unit Manufacturer. Install units level, plumb, and firmly anchored in locations and at heights indicated.

B. Grab Bars: Install to withstand a downward load of at least 250 lbf, when tested according to method in ASTM F 446.

C. Mounting Heights and Locations: As required by accessibility regulations.

3.4 ADJUSTING AND CLEANING

A. Adjust accessories for unencumbered, smooth operation. Replace damaged or defective items.

B. Remove temporary labels and protective coatings.

C. Clean and polish exposed surfaces according to Manufacturer's written recommendations.

3.5 SCHEDULES

A. See drawings for proposed locations.

END OF SECTION

SECTION 11132

PROJECTION SCREENS

PART 1 - GENERAL

1.1 SUMMARY

A. Section Includes:
   1. Electrically operated concealed mounted projection screens
   2. Related accessories

B. Related Sections:
   1. Section 09510 - Acoustical Ceilings
   2. Electrical Sections, Electrical characteristics and wiring connections

1.2 REFERENCES

A. Underwriters Laboratories Inc.:
   1. UL - Electrical Appliance and Utilization Equipment Directory.

1.3 SUBMITTALS

A. Section 01330 - Submittal Procedures: Requirements for submittals.

B. Shop Drawings: Submit Manufacturer’s wiring diagram for electrically operated controls. Also detailed drawings concealed mounting.

C. Product Data: Submit Manufacturer’s product data on materials, finishes, operation of unit, and electrical requirements.

D. Manufacturer's Installation Instructions: Submit detailed installation instructions including rough-in measurements.

E. Manufacturer's Certificate: Certify Product meet or exceed specified requirements.

1.4 CLOSEOUT SUBMITTALS

A. Section 01700 – Project Close-out

B. Operation and Maintenance Data:
   1. Submit parts catalog with complete list of equipment replacement parts; identify each entry with equipment description and identifying code.
   2. Submit technical information for servicing operating equipment.

1.5 QUALITY ASSURANCE

A. Products Requiring Electrical Connection: Listed and classified by Underwriters Laboratories, Inc as suitable for purpose specified and indicated.

B. Maintain one copy of each document on site.

1.6 QUALIFICATIONS

A. Manufacturer: Company specializing in manufacturing Products specified in this section with minimum three years documented experience.

B. Installer: Company specializing in performing work of this section with minimum three years documented experience.

1.7 DELIVERY, STORAGE, AND HANDLING

A. Section 01600 - Products and Substitutions

B. Deliver projection screens after building is enclosed, other work within spaces where screens are to be installed is substantially complete, and installation of screens is ready to take place.

C. Protect projection screens from damage before, during and after installation.

1.8 FIELD MEASUREMENTS

A. Verify field measurements prior to fabrication.

1.9 COORDINATION

A. Section 01300 - Submittals

B. Coordinate installation of ceilings, walls, electric service power characteristics, and location.

PART 2 - PRODUCTS

2.1 PROJECTION SCREEN - ELECTRICALLY OPERATED CONCEALED

A. Manufacturers:
   1. Draper. Model Ambassador
   2. Draper: Model Signature / Series E
   3. Substitutions: Section 01600 – Products and Substitutions

B. Type: Motor-operated screen, fully recessed mounting with automatic ceiling closure.

C. Screen Case:

1. Sides and Top: Wood with metal-lined motor compartment and aluminum bottom panels, factory-primed and constructed.
2. Bottom Panels: Offset mounted to case in position where bottom surfaces align flush with finished surfaces of adjoining ceiling. Recess bottom edges of case surrounding panels by depth of, and conceal behind overlapping ceiling finish.
3. Automatic Operation: Bottom of case composed of two panels fully enclosing screen and motor, one panel attached to case by continuous hinge and connected to drive mechanism to open and close automatically when screen is lowered and fully raised, respectively, and other panel removable or operable for access to interior of case.
4. Top: Double top for extra rigidity and sound deadening.

2.2 ELECTRICAL CHARACTERISTICS AND COMPONENTS

A. Section 16123 – Building Wire and Cable.

B. Requirements for electrical characteristics.
1. 120 volts, single phase, 60 Hz.

C. Disconnect Switch: Factory mount disconnect switch on equipment.

2.3 SCREEN SURFACES

A. Screen: Optical-quality spherical glass beads, chemically coated and applied to backing, forming optical-quality screen surface. Surface 3 times brighter than matte white.

B. Mildew and flame resistant with top edge mounted on, and securely anchored to, rigid metal roller supported by self-aligning bearings in brackets.

C. Size: 7’ x 9’ viewing surface.

2.4 PROJECTION SCREEN MOTORS

A. Motors:
1. Instant reversing, gear drive motor of size and capacity recommended by screen Manufacturer, with permanently lubricated ball bearing, automatic thermal overload protection, preset limit switches to automatically stop screen in UP and DOWN position, and positive stop action to prevent coasting.

B. Screen Control: Single station, Electric push button, UL listed key-operated switch for screen with metal device box and cover plate for flush wall mounting and for connection to 120 Volts AC electric power supply.

PART 3 - EXECUTION

3.1 EXAMINATION

A. Section 01300 - Administrative Requirements: Verification of existing conditions before starting work.

B. Verify rough-in opening and conditions are acceptable.

C. Verify electrical power is available and of correct characteristics.

3.2 INSTALLATION

A. Install projection screens at location indicated on Drawings.

B. Coordinate with electrical connection.

C. Coordinate installation with ceiling finishes for application of ceiling finish to screen case bottom panels.

D. Securely anchor to supporting substrate.

E. Install to produce smoothly operating screen with plumb and straight vertical edges and plumb and flat viewing surfaces when lowered.

F. Test electrically-operated units to verify screen controls, limit switches, closure and other operating components are in optimum functioning conditions.

3.3 ADJUSTING

A. Section 01700 - Execution Requirements: Requirements for balancing and adjusting.

B. Adjust installed unit for smooth and balanced operation.

3.4 CLEANING

A. Section 01700 – Project Close-out

B. Remove protective coverings from finished surfaces. Clean surfaces and components ready for inspection.

3.5 DEMONSTRATION

A. Demonstrate electrically operated projection screens to Owner.

3.6 PROTECTION OF FINISHED WORK

A. Section 01400 - Quality Requirements: Tolerances.

B. Do not permit use of projection screens after installation.

END OF SECTION

SECTION 11140

FUEL DISPENSING SYSTEM

PART 1 - GENERAL

1.1 RELATED DOCUMENTS

A. The general provisions of the Contract, including General and Supplementary Conditions, apply to the work specified in this Section.

1.2 RELATED WORK SPECIFIED ELSEWHERE

A. Sections including but not limited to the following:
   1. Section 15400 - Plumbing Piping And Associated Materials.

B. All other Divisions of the Contract Documents. Refer to each Division's specifications and drawings for all requirements.

1.3 SCOPE

A. Provide all equipment, materials, labor, supervision, and services necessary for or incidental to the installation of a complete unleaded gasoline and diesel fuel dispensing system.

B. Work includes:
   1. Lightweight double wall steel aboveground, 2 hour fire-rated cylindrical UL 2085 storage tank, with lightweight thermal insulation for fire protection, one - 4,000 gallon cylindrical tank diesel, and one 2,000 gallon cylindrical tank gas.
   2. Dispenser units pumps nozzles.
   3. Tank level and leak detection system.
   4. Appurtenances including pumps, dispensers, filters, hose, swivels, breakaways, high hang retractors, spill control, emergency/updraft venting, pipe, valves and fittings.

1.4 QUALIFICATIONS

A. Manufacturer: company specializing in the Manufacturer of products specified in this Section with minimum of five years experience.

B. Calibration of dispensers shall be performed by a Contractor licensed by the Texas Department of Agriculture and by a registered service person.

1.5 SUBMITTALS

A. Shop drawings and product data in accordance with division 1 showing dimensions, connections, capacities, pressure ratings, arrangement, accessories, controls and wiring.

B. Manufacturer's descriptive literature and specification with capacities, efficiencies, head versus flow curve, installation and operating instructions, list of recommended spare parts, and storage requirements.

C. Nearest authorized service representatives.

D. Results of dispenser calibration tests including registration number of service person and the certificate of dispenser calibrator.

E. Documentation showing successful completion of UL 2085 for the complete aboveground tank.

1.6 QUALITY ASSURANCE

A. Use adequate numbers of skilled workmen who are thoroughly trained and experienced in the necessary crafts and who are completely familiar with the specified requirements and the methods needed for proper performance of the work of this Section.

B. Without additional cost to the Owner, provide such other labor and materials as are required to complete the work of this Section in accordance with the requirements of governmental agencies having jurisdiction, regardless of whether such materials and associated labor are called for elsewhere in these Contract Documents.

C. When requested, provide the Architect with Manufacturer's certificate that materials meet or exceed minimum requirements as specified.

D. Standards: the specifications and standards of the following organizations are by reference made a part of these specifications. All mechanical work, unless otherwise indicated, shall comply with the requirements and recommendations wherever applicable:
1. National Fire protection Association (NFPA) 30 Flammable and combustible Liquids Code
2. National Fire Protection Association (NFPA) 30A, Automotive and Marine Service Station code
3. Underwriters Laboratories, Inc. (UL) 2085, Protected Tank and Fire Resistive Tank Listing, with ballistic and impact resistance ratings
4. Underwriters Laboratories, Inc. (UL) 142, Steel Aboveground Tanks for Flammable and Combustion Liquids
5. Underwriters Laboratories, Inc. (UL) 1238, Control Equipment for Use with Flammable Liquid Dispensing Devices
6. Underwriters Laboratories, Inc. (UL) 567, Pipe Connectors for Flammable and Combustible Liquids and LP-Gas
7. Underwriters laboratories, Inc. (UL) 860, Pipe Unions for Flammable and Combustible Liquids and Fire Protection Service
8. Underwriters Laboratories, Inc. (UL) 87, Power-operated Dispensing Devices for Petroleum Products
9. Underwriters Laboratories, Inc. (UL) 842, Valves for Flammable Fluids
10. Underwriters Laboratories, Inc. (UL) 1709
11. American Petroleum Institute (API)
12. Petroleum Equipment Institute (P.E.I.) - Recommended Practice for Installation of Aboveground Storage Systems for Motor Vehicle Fueling
13. National Electric Code: NEC 501-Class I locations and NEC 514 - Gasoline Dispenser and Service Station
14. National Resource Conservation Commission
15. Texas Commission on Environmental Quality.

PART 2 - PRODUCTS

2.1 FUEL TANKS AND OVERFILL PROTECTION

A. Provide aboveground protected type vaulted fuel storage tanks. Tanks shall be factory-fabricated, have factory installed insulation and be factory tested. Tanks shall be shown to have passed safety requirements of UFC A-II-F1, including 2 hour fire resistance, hose stream testing, bullet resistance and impact resistance.

B. Fuel storage system shall be composed of two above ground, insulated tanks with secondary containment. Tanks shall be utilized for unleaded gasoline and diesel fuel but shall be capable of containing 10% concentration of methanol and 85% alcohol blended fuels. Materials of construction shall be suitable for products listed in paragraph 2.03 - Fuel System Instrumentation.

C. The insulated concrete vaulted tanks shall rest a minimum of 4" above the finished grade. The entire encased tank assembly shall be a Fireguard UL listed in accordance with UL Subject 2085. Tanks shall be provided with means to anchor to slab.

D. Tanks shall be equipped with a monitor port utilized for the detection of leaks from the primary to the secondary tank. The monitor port shall be a minimum of 2” schedule 40 steel and suitable for electronic monitoring.

E. Provide tank equipment listed below or engineer approved equal:

1. Provide primary and secondary emergency venting in accordance with NFPA 30. Provide permanent tag affixed to tanks listing required venting SCFH of the primary and secondary vaults.
2. Provide 2” updraft vent with vent cap terminating a minimum 12’ above grade to top of vent cap. When the updraft vent is covered by fuel island canopy the vent is required to extend a minimum of 24” above the top of the canopy and at least 24” above tank.
3. Tanks shall have future conversion capability suitable for future installation of Stage I & II vapor recovery systems.
4. Opening for submersible pump shall be 4” female threaded pipe suitable for design of pump.
5. Provide 2” male threaded nipple for OPW200TG wheel type clock gauge.
6. The aboveground storage tank system shall include a UL listed storage tank spill container OPW#6-211-R-30-2-B2-LD 12 gauge powder coated not less than 30 gallons with adjustable legs. Spill container shall have minimum of two booted 4” entry holes and a normally closed valve to release spilled product into an approved container. Provide a UL Listed shut-off valve in the top of the tank set at 95% fill capacity OPW#61FSTOP-1000 complete with OPW61FT drop tube for complete submerged filling. Provide tank inlet spout adapter with crossbar OPW#633AST-2061 and cam lock coupler OPW#633B-0150 with a 2” steel pipe flanged connection at valve in the vertical plane for shut off valve accessibility. Provide a means to stick tank with a top adapter and lockable cap. On unleaded tank only, provide two 4” male nipples for future Stage I and Stage II Vapor Recovery.
7. Tanks shall be warranted against leakage for period of 30 years from the date of installation. All pumps, dispensers, dispenser equipment, pipe valves and fittings

and tank appurtenances shall be warranted for Manufacturer defects for a period of 1 year from the date of installation.

8. Tank system shall be as listed below or approved equal.

F. Acceptable Manufacturers - Aboveground Storage Tanks:
   1. UL2085 - Fireguard

2.2 REMOTE DISPENSER UNITS

A. Acceptable Manufacturers:
   1. Gasboy
   2. Bennett
   3. Wayne

B. The Contractor will furnish new remote dispenser units in accordance with plans and install and calibrate these units per the following standards:
   1. Dispenser units shall be equipped with a heavy-gauge corrosion-resistant cabinet, removable panels, bolt construction, weather-lapped housing joints, rubber vibrator dampers and mechanical totalizers. Dispensers shall be capable of being field calibrated and shall be constructed for heavy duty usage.
   2. Dispenser units shall be equipped with a device that will register to 99.9 gallons and totalize to not less than 99,999.99 gallons. Totalizer shall be non-resettable. Dispensing system shall also include a pulsing device with capabilities to interface with a Fuel Control System (FCS).
   3. Dispenser units shall be equipped with a two (2), three (3) or four (4) piston meter for accuracy.
   4. The unit shall meet the current National Bureau of Standards Handbook No. 44, covering retail fuel type pumps, and shall be certifiable by the Weights and Measures Division of the Texas Department of Agriculture. If a two (2) product unit is requested, the unit must meet this requirement and all the other requirements stated in this entire specification for both product dispensing systems.
   5. The dispenser shall include an in-line, externally mounted, replaceable fuel filter with a drain valve.
   6. Gasoline dispenser units shall be capable of accepting future Stage II vapor recovery vacuum assist pumps.
   7. The dispenser will be equipped with a pipe coupling to allow disconnection and removal of the dispenser. The coupling shall be installed as close as possible to the shear valve (inside dispenser cabinet) so as to provide for a fully functioning shear valve and allow removal of the dispenser.
   8. The Contractor shall supply and install dispenser pedestals for above-ground piping and shear valve (Storage Solutions or an approved equal). The dispenser pedestal shall be 3/8 inch thick (minimum).
   9. Provide a pre-manufactured remote base by Bravo Systems B-8600 series with shear valve OPW#10 series.

2.3 PUMPS

A. Acceptable Manufacturers - Submerged Pumps:
   1. FE Petro

2. Red Jacket

B. The Contractor will furnish new pumps in accordance with plans and install and calibrate these units per the following standards:
   1. Submersible pumps shall be appropriate horse-power. The pump capacity shall not be less than 12 gallons per minute (gpm) at each nozzle, with each nozzle operating with one (1) foot of fuel remaining in the tank at any time of the year. A flow test shall be performed by a TCEQ certified testing firm furnished by the Contractor and witnessed by the Engineer.
   2. The bottom of the pumping unit shall be constructed and installed so as to allow removal and pumping of the maximum volume of fuel from the tank (i.e. the bottom of the pump shall be as close to the bottom of the tank as allowed and recommended by a pump Manufacturer).
   3. The bottom of the pumping unit shall be a minimum two (2) inch diameter.
   4. Provide a remote control unit equal to Red Jacket Model 880-041-5.

2.4 DISPENSER NOZZLES AND MISCELLANEOUS EQUIPMENT

A. Acceptable Manufacturers:
   1. OPW 11A Automatic Nozzle with OPWB Fillgard Splash Guard and OPW6 two (2) piece hand insulator
   2. Husky

B. The Contractor will furnish new nozzles, splash guards, hand insulators and hoses in accordance with the plans and specifications, and shall install and calibrate these units per the following standards:
   1. The completed dispenser system individual nozzle shall deliver product at a rate not less than specified above.
   2. The dispenser units shall be equipped with not less than 3/4 inch hydrocarbon-resistant synthetic rubber hose that is not less than 16 feet long. Each hose shall include a half swivel connector with straightening hose at the dispenser and a multi-swivel at the nozzle. Each hose shall be equipped with an individual hose retractor assembly capable of retrieving the hose length specified above. All adjustments and modifications will be performed by the Contractor to ensure that the hose retriever meets the Engineer's requirements. The Contractor shall install an approved emergency breakaway coupling on the dispensing hose.
   3. If a dual product/two (2) hose and/or single product/two (2) hosed unit is supplied, the Contractor shall be responsible for installing a second product line or establishing service so both hoses of the unit are capable of the 10 gpm delivery requirement when the hoses are operating concurrently.
   4. Splash guards and hand insulators shall be provided for each dispenser nozzle.
   5. Hose Retrievers. Hose retrievers (one (1) per hose) shall be Universal Hose Retriever Model 870 with Hosebun Model 100-1+B and hose cable assembly or an approved equal.
   6. Breakaway Hose Connectors. Breakaway hose connectors shall be OPW 66.
   7. Flexible Connectors. Flexible connectors shall be Flex-Ing.
   8. Fillpipe Adaptors with Lockable Top Seal Cap:
      a. Fillpipe adaptors shall be OPW 633T, EMCO Wheaton, Universal, EBW, Pemco. Caps shall be OPW 634TT, EMCO Wheaton, Universal, EBW, Pemco.

b. Fillpipe adaptors and caps shall be installed at all locations indicated on the plans.

c. The Contractor shall purchase and provide the following fuel connection attachments required during the fuel supply operations, and use for fuel transfer from the fuel truck into the aboveground storage tanks:
   1) two (2) OPW 633BD Kamlock Couplers or an approved equal
   2) two (2) OPW 190 Manual Nozzles or an approved equal

2.5 FUEL SYSTEM INSTRUMENTATION

A. Provide a complete tank level monitoring and leak detection/monitoring system. Coordinate voltage requirements with available 120V as show on the electrical drawings.

B. Automatic tank gauging system shall meet requirements of 40 CFR 280 including Subpart D, Release Detection and 30 TAC 334 including 334.50 Release Detection. The system shall be tested to comply with all applicable Federal Communications Commission requirements, be listed by Underwriters Laboratory, and comply with all other applicable national and local standards.

C. System shall include capability of monitoring up to four tanks and eight leak sensors. System shall be field programmable, completely automatic, have 50 year data retention, and Standard RS-232C and RS 485 communications interface modules and are capable of interfacing with Modem, Fax and Network Interface. The system shall be capable of operating without any additional hardware or software. The system will include printer, keypad, and liquid crystal display housed in a NEMA 12 rated panel. Output shall be in gallons. The system shall have 6 relays for sending alarm signals to the remote annunciator panel.

D. Inventory reports shall include inventory records, records of product deliveries, leak test reports, shift reports, and alarm reports, theft reports. Inventory reports shall give current tank status such as tank number, product, inches and gallons of product, inches and volume of water, and product temperature. Shift reports shall include the current tank status plus the net change in gallons that shift. Leak test reports shall include tank inventory at the beginning and ending of the test and pass/fail message. Delivery reports shall include beginning and ending inventories and net gallons delivered. Printer shall be automatic and on demand and shall be programmed to conduct leak tests at a minimum of once in a 35 day period.

E. System Supplier shall furnish console, probes, sensors, remote annunciator and wire from console to probes, sensors and remote annunciator.

F. Tank level monitoring system shall include a minimum of two probes. Probes shall be classified by Underwriters Laboratories and intrinsically safe for use in Class 1, Division 1, Group D hazardous locations. Probes may be magnetorestrictive. System shall have programmable alarm limits to activate on:
   1. High product level
   2. Low product level
   3. High water level
   4. Leaks
   5. Thefts
   6. High level

G. Console shall provide on-site remote audible alarms or horns shall be provided for Low Product, High Product, Water, Theft, and Leak Check. The Contractor shall be held responsible that each console is fully programmed for all alarms in accordance with the contract specifications. All alarm thresholds shall be user-programmable. Alarms shall be 100 decibels minimum, suitable for outdoor use and include manual reset.

H. Manufacturer shall provide one year warranty for parts and labor for console, probes, sensors and wire.

I. The entire system including probes shall be fully compatible with the products to be stored including gasohol (ten percent ethanol and 90 percent gasoline mixture), 09.5 percent gasoline, and 9.5 percent Oxinol-50* (4.75 percent methanol and 4.75 percent methanol and a minimum of 2.5 percent cosolvent - the blend may contain a maximum concentration of up to 3.7 weight percent oxygen in the final fuel); MTBE (methyl tertiary butyl ether) - gasoline with up to 20 percent, by volume of MTBE; or diesel fuel.

J. Furnish the Owner's representative with one Operation and Maintenance Instruction Manual for the automatic tank gauge before beginning any work at the site. Furnish original manuals, reproduced copies are not acceptable.

K. Manufacturer or their authorized representative shall perform start up programming, calibration and installation verification at site. The Contractor shall be liable for all programming. Controller shall include tank set up to account for tilt, material of construction, shape and product. Manufacturer shall conduct an Operations and Maintenance seminar. At the initial seminar, the Owner shall be provided with a detailed summary (in addition to the manual provided prior to work commencing at the site) of the steps required to program, calibrate and operate the equipment. In addition to the initial on-site seminar, the Contractor shall conduct another Operations and Maintenance seminar for the Owner.

L. The remote annunciator shall have a NEMA 7 enclosure rating and shall include one red alarm light for each tank. It shall include a common audible alarm with a test and reset button. The audible alarm shall be silenced up pressing the Reset Button but the visual alarm shall not clear until the alarm condition has been corrected. It shall be an LC 1003 as manufactured by Pneumercator or approved equal.

M. The level probe shall be of the magnetostrictive type capable of reporting both gross and net product levels and water level. It shall require a shielded, twisted pair cable for connection to the console. It shall be a MP 450S-xxx-25 as manufactured by Pneumercator or approved equal.

N. The leak sensor shall be of the float switch type requiring a two wire connection. It shall be a LS 600 LDBN for diesel and gasoline and LS 600 LDSS for "alternative" fuels as manufactured by Pneumercator or approved equal

O. System shall be a Tank Management System with EPA-Compliant with in-tank leak detection capable TMS 3000 SERIES (4 tanks) as manufactured by Pneumercator or approved equal.

2.6 PIPE AND PIPE FITTINGS

A. Steel Pipe and Fittings:
   1. Above ground pipe shall be Schedule 40 ASTM A120. Fittings and couplings shall be extra heavy malleable iron screw-type. Unions shall be 250/300# with integral seats. Galvanized pipe and fittings shall be used for gasoline fuel pipe. Black pipe and fittings shall be used for diesel fuel pipe. Vent pipe shall be galvanized steel pipe. Each tank shall be vented individually.

B. Flexible Connectors:
   1. Flexible connectors shall be UL listed stainless steel braided as supplied by Titflex or other approved Manufacturer. Flexible connectors shall use convoluted Teflon inner core rated for all grades of fuel including diesel and ethanol or methanol blends of gasoline. Flexible connection shall include a warranty for a minimum period of 20 years against corrosion. Flexible connectors shall be enclosed in an isolation jacket having equal pressure rating of five to seven psi. Install in accordance with Manufacturer's instructions, do not install at radius less than approved by Manufacturer. All external components of the isolation jacket shall be to non-corrodible. Isolation jacket to be Flex-ing, or equal by approved Manufacturer.

C. Gaskets:
   1. Gaskets shall be suitable for gasoline, diesel, gasoline/methane. Gaskets to be Style 780 plant Fibre sheet by American Packing and Gasket Company or equal approved Manufacturer.

2.7 VALVES

A. Gate Valves: Three inch and smaller valves used in fuel lines shall have threaded ends and be installed at all locations as required for a fully functional system. Valves components shall be rated for gasoline, diesel and gasoline/methanol. Packing shall be non-asbestos graphite/aramid fiber. Valves shall be Grinnell Figure no. 3010 or equal as supplied by approved Manufacturers.

B. Shear and Check Valves; Check valves at dispensers for aboveground tanks shall be Tokheim model 52 or equal with shear section and shear bar.

C. Solenoid Valves: Shall be Morrison 710 series or equal by approved Manufacturer.

D. Pressure Relief Valves; Shall be Red Jacket model 123-032-5 or equal by approved Manufacturer.

E. Overfill Protection: Overfill protection for aboveground tanks shall meet state and federal Codes.

2.8 SIGNS

A. Supply and install eight signs at locations selected by Owner. Four of the signs shall be installed on the sides of the tanks. Signs shall be conspicuous and legible signs reading "No Smoking - Stop Engines" in letters not less than two inches in height and 3/8 inch stroke.

B. Supply and install four signs at locations selected by Owner. Signs shall be conspicuous and legible reading "EMERGENCY SHUT-OFF" in letters not less than two inches in height and 3/8 inch stroke.

C. Supply and install four signs indicating service and contents (i.e. Diesel, Unleaded) of both the dispenser units and tanks.

PART 3 - EXECUTION

3.1 INSTALLATION

A. Install in accordance with Manufacturer's recommendations.

B. Dispensers and pumps shall be installed at locations as shown on the drawings. Contractor shall install dispensers as required and furnish all appurtenances including pressure regulating valves, flexible connectors for a fully operational system. Contractor shall furnish and install all new electrical components including but not limited to conductors, conduit, flexible conduit, fittings, unions, junction boxes, wireways, seal fittings/seal-offs, emergency stops, etc. between the dispensers and a wireway located at the building.

C. EPO-switch shall be an shall be clearly identified and easily accessible and be installed in a remote location more than 20 feet but less than 100 feet from the dispenser units and also in line of sight of the dispenser units. The emergency stop button shall be a manufactured emergency stop control station complete kit with a clear cover and emergency stop signage within enclosure by Power Integrity #IA-ESOC.

D. On-site remote audible alarm or horn with reset shall be located near tanks as directed by Owner. Alarm shall be activated on high level in tanks and other criteria such as theft, low product, etc., the alarm annunciator with a alarm light indicating which tank is in the alarm mode.

3.2 PIPING, VALVES AND FITTINGS

A. Materials and Design: Piping, valves, fittings, and related components shall be designed and fabricated from suitable materials, having adequate strength and durability to withstand the operating pressures, structural stress, and exposures to which they may be subjected. Specific requirements are that materials must:
   1. Be compatible with products stored.
   2. Not be damaged by normal operating or test pressures.
   3. Have sufficient integral strength to withstand stress during construction and subsequent operations.
   4. Not deteriorate while exposed to outdoor conditions.

B. Piping Layout: Traps (sumps) in the lines shall be avoided.

C. Piping Requirements: Piping materials shall be compatible with products stores. Piping shall be installed so as to facilitate testing, resist corrosion, and prevent damage from movement of system components.

1. Inspect all materials for signs of damage and confirm compliance with specifications.
2. Provide adequate clearance between piping and conduit, nearby structures, and other system components.
3. Keep pipe, as well as fitting interiors and threads, free from dirt, corrosion, moisture, and debris.
4. Exercise care to accurately measure and cut pipe, so as to avoid the failure that can occur when pipe fittings are installed under stress.
5. Use pipe sealant (dope or cement) compatible with the piping materials and the product being handled. Wrap ribbon dope with the threads to avoid bunching during tightening. Follow the Manufacturer's preparation and application instructions, giving proper attention to temperature and moisture condition limitations.
6. Install equipment, check valves, valves, flexible connectors, gauges, monitoring systems, and other system components in accordance with Manufacturer's recommendations.
7. Isolate dissimilar materials using sleeves, dielectric unions, etc., to prevent electrolysis.

D. Piping Workmanship:
1. Inspect pipe-cutting dies frequently and replace when worn.
2. Ream and de-burr pipe ends after cutting.
3. Flexible connectors shall be used at the beginning and end of each product line and, if required to relieve stress, where lines change direction.

3.3 TESTING AND TRAINING

A. System Tests: Tank and piping, as well as the satisfactory operation of monitoring systems shall be proven before the system is placed in operation.

B. The following Tank and Component Tests are required to ensure the integrity of the system:
1. Before placing components in the excavation: 5 psig air test.
2. After pipe assembly but before connection to the tank or dispensers: 50 psig air test or 100% hydrostatic test.
3. Before placing the system in service:
   a. Internal and External Monitoring and Gauging Systems: Manufacturer's recommendations
   b. Tank System: Precision test. (NFPA 329)

C. "As-Built" Drawings: "As-Built drawings of piping, monitoring, and other system components shall be provided by this Installer to the Owner. The documents may take the form of a marked-up set of installation drawings showing the location of piping, conduit, and other significant system components.

D. Component Documentation: Provide the owner with installation and operating instructions for all components of the tank system, recommended test procedures, preventive maintenance schedules, and tank charts that indicate gallons for various depths.

3.4 SAFETY PRECAUTIONS

A. The Contractor shall store or handle gasoline or other flammable liquids in strict accordance with all state fire Marshall Requirements.

B. The Contractor shall have two Class 20 B:C fire extinguishers readily available for any work which involves release of product or use of a sparking device.

C. As a minimum, the Contractor shall take the following precautions:
   1. Eliminate all potential sources of ignition from the area including smoking materials, and nonexplosion proof electrical and internal combustion equipment.
   2. Prevent the generation and discharge of static electricity during venting of flammable vapors.
   3. Prevent the accumulation of vapors at ground level and other key locations.

D. A combustible gas indicator shall be used to check for explosive vapor concentrations. All open flame and spark-producing equipment within the vapor hazard area shall be shut down. Electrical equipment (for example, pumps and portable hand tools) used in the area shall be explosion-proof in accordance with NFPA 70B Class I, Division I, Group D or otherwise approved for use in potentially explosive atmospheres.

E. The Contractor shall clean up all fuel and oil spills related to his operations immediately. Sorbent pads or sweeping compound shall be used for diesel spills. Sorbent pads shall be used for gasoline. Spills shall not be washed into yard drains, sidewalks, streets, etc.

F. The Contractor shall use a pan or pail to drain all product from the equipment. The Contractor shall not allow product to soak into the ground. In the event of a spill or leak the Contractor shall immediately (within 4 hours) notify the TxDOT Representative. In addition, within 24 hours of the spill submit typed documentation summarizing the incident to the TxDOT Representative.

G. In case of fire, the Contractor shall immediately notify the TxDOT personnel and the following general procedures consistent with NFPA shall be used (the Contractor shall evaluate the specific situation before acting):
   1. Contact the Fire Department.
   2. Shut off flow of product that may be entering the area.
   3. Attempt to extinguish fire or keep it from spreading to adjacent areas. If the fire is out of control, clear the area to avoid risk of injury.
   4. Use a dry chemical fire extinguisher (B:C type).

H. The Contractor shall maintain written documentation of compliance with all of the above requirements.

3.5 CALIBRATION AND DISPENSERS

A. All dispensers shall be checked for calibration by the Contractor after work has been completed but prior to acceptance of the work by the Owner. Any adjustments, modifications, repairs, etc., (i.e. the replacement of meters, pump impellers, etc.) Required to the dispenser or fuel system to achieve the required flow plus six cubic inches per five gallons shall be done at no additional cost to the Owner. Include results

of calibration tests and a copy of the certificate of registration for the service person that performed the calibration and adjustments in the Operations and Maintenance Manuals.

3.6 SYSTEM DEMONSTRATION

A. Contractor shall demonstrate to Owner and/or Owner's Representative all functions and alarms.

3.7 WARRANTY

A. Tank Manufacturer shall furnish a 30-year warranty to the Owner. Warranty shall be against defects in material and workmanship and shall include repair or replacement at no cost to the Owner.

END OF SECTION

SECTION 12493

HORIZONTAL LOUVER BLINDS

PART 1 - GENERAL

1.1 SUMMARY

A. Section includes horizontal metal slat louver blinds and operating hardware.

B. Related Sections:
1. Section 06114 - Wood Blocking and Curbing: Blocking for attachment of headrail brackets.

1.2 SUBMITTALS

A. Section 01330 - Submittal Procedures: Submittal requirements.

B. Shop Drawings: Indicate opening sizes, tolerances required, method of attachment, clearances, and operation.

C. Product Data: Submit data indicating physical and dimensional characteristics, operating features, and full range of Manufacturers for initial color selection.

D. Samples: Submit one sample, long illustrating slat materials and finish, color, wand type and color.

E. Manufacturer's Installation Instructions: Submit special procedures and perimeter conditions requiring special attention.

1.3 QUALITY ASSURANCE

A. Source Limitations: Obtain horizontal louver blinds through one source from a single Manufacturer.

B. Fire-Test-Response Characteristics: Provide horizontal louver blinds with the fire-test-response characteristics indicated, as determined by testing identical products per test method indicated below by UL or another testing and inspecting agency acceptable to authorities having jurisdiction. Identify materials with appropriate markings of applicable testing and inspecting agency.
1. Flame-Resistance Ratings: Passes NFPA 701.

C. Product Standard: Provide horizontal louver blinds complying with WCSC A 100.1.

D. Manufacturer: Company specializing in manufacturing products specified in this section with minimum three years documented experience.

1.4 MOCKUP

A. Section 01400 - Quality Requirements: Mockup requirements.

B. Construct mockup of one full size window.

C. Locate where directed by Architect/Engineer.

D. Incorporate accepted mockup as part of Work.

1.5 FIELD MEASUREMENTS

A. Verify field measurements prior to fabrication.

1.6 COORDINATION

A. Section 01300 - Administrative Requirements: Coordination and project conditions.

B. Coordinate the Work with window installation and placement of concealed blocking to support blinds.

1.7 EXTRA MATERIALS

A. Section 01700 - Execution Requirements: Spare parts and maintenance products.

B. Supply ten additional slats.

C. Supply two additional complete blind assemblies.

D. Supply 3 extra lift cords and control wands.

PART 2 - PRODUCTS

2.1 HORIZONTAL LOUVER BLINDS

A. Manufacturers:
1. Bali Window Treatments
2. Hunter Douglas Window Fashions
3. Levolor Contract
4. Substitutions: Section 01600 - Product Requirements

2.2 COMPONENTS

A. Blinds: Horizontal slat louvers hung from full-width headrail with full-width bottom rail; manual control of raising and lowering by cord with full range locking; blade angle adjustable by control wand.

B. Metal Slats: Spring tempered pre-finished aluminum; square slat corners, with manufacturing burrs removed:
   1. Width: 1 inch
   2. Thickness: 0.011 inch
   3. Color: As selected from Manufacturers full range

C. Slat Support: Woven polypropylene cord, ladder configuration.

D. Headrail: Pre-finished, formed aluminum box, with end caps; internally fitted with hardware, pulleys, and bearings for operation; same depth as width of slats.
   1. Color: As selected from Manufacturers full range.

E. Bottom Rail: Pre-finished, formed aluminum with top side shaped to match slat curvature; with end caps.
   1. Color: Same as Headrail.

F. Lift Cord: Braided nylon; continuous loop.
   1. Free end weighted
   2. Color: As selected from Manufacturers full range.

G. Control Wand: Extruded solid plastic; round shape.
   1. Removable type.
   2. Length of window opening height
   3. Color: As selected from Manufacturers full range.

H. Headrail Attachment Mounting: Ceiling mounting to head in window openings, permitting easy removal and replacement without damaging blind or adjacent surfaces and finishes; with spacers and shims required for blind placement and alignment indicated.
   1. Provide intermediate support brackets if end support spacing exceeds spacing recommended by Manufacturer for weight and size of blind.

I. Accessory Hardware: Type recommended by blind Manufacturer.

J. Colors, Textures, Patterns, and Gloss: As selected by Architect from Manufacturer's full range.

2.3 FABRICATION

A. Fabricate blinds to fit within openings with uniform edge clearance of ½ inch.

B. Concealed Components: Noncorrodible or corrosion-resistant-coated materials.
   1. Lift-and-Tilt Mechanisms: With permanently lubricated moving parts.

C. Unit Sizes: Obtain units fabricated in sizes to fill window and other openings as follows, measured at 74 deg F:
   1. Blind Units Installed between (inside) Jambs: Width equal to 1/4 inch per side or 1/2 inch total, plus or minus 1/8 inch, less than jamb-to-jamb dimension of opening in which each blind is installed. Length equal to 1/4 inch, plus or minus

1/8 inch, less than head-to-sill dimension of opening in which each blind is installed.

D. Installation Brackets: Designed for easy removal and reinstallation of blind, for supporting headrail, valance, and operating hardware, and for hardware position and blind mounting method indicated.

E. Installation Fasteners: No fewer than two fasteners per bracket, fabricated from metal noncorrosive to blind hardware and adjoining construction; type designed for securing to supporting substrate; and supporting blinds and accessories under conditions of normal use.

F. Color-Coated Finish:
1. Metal: For components exposed to view, apply Manufacturer's standard baked finish complying with Manufacturer's written instructions for surface preparation including pretreatment, application, baking, and minimum dry film thickness.

G. Component Color: Provide rails, cords, ladders, and exposed-to-view metal and plastic matching or coordinating with slat color, unless otherwise indicated.

PART 3 - EXECUTION

3.1 EXAMINATION

A. Section 01300 - Administrative Requirements: Coordination and project conditions.

B. Verify openings are ready to receive work.

C. Verify structural blocking and supports are correctly placed.

3.2 INSTALLATION

A. Provide blind at each window.

B. Install blinds. Install horizontal louver blinds level and plumb and aligned with adjacent units according to Manufacturer's written instructions, and located so exterior slat edges in any position are not closer than 1 inch to interior face of glass. Install intermediate support as required to prevent deflection in headrail. Allow clearances between adjacent blinds and for operating glazed opening's operation hardware if any.

C. Head Mounted: Install headrail to inside of head of window opening.

D. Secure in place with flush countersunk fasteners.

E. Place intermediate head supports at Manufacturers recommendation.

3.3 ERECTION TOLERANCES

A. Section 01400 - Quality Requirements: Tolerances.

B. Maximum Variation of Gap at Window Opening Perimeter: 1/4 inch.

C. Maximum Offset From Level: 1/8 inch.

3.4 ADJUSTING

A. Section 01700 - Execution Requirements: Testing, adjusting, and balancing.

B. Adjust blinds for smooth operation.

3.5 CLEANING

A. Section 01700 - Execution Requirements: Final cleaning.

B. Clean blind surfaces just prior to occupancy. Clean horizontal louver blind surfaces after installation, according to Manufacturer's written instructions.

C. Provide final protection and maintain conditions, in a manner acceptable to Manufacturer and Installer that ensure that horizontal louver blinds are without damage or deterioration at time of Substantial Completion.

D. Replace damaged horizontal louver blinds that cannot be repaired, in a manner approved by Architect, before time of Substantial Completion.

END OF SECTION

SECTION 13120

PRE-ENGINEERED BUILDINGS

PART 1 - GENERAL

1.1 SCOPE: The extent of Pre-engineered Buildings is shown on the drawings, including:

A. Pre-engineered, shop fabricated structural steel building frame.

B. Metal wall and sloped roof systems including linear panels, flashing soffits, gutters and downspouts, canopies. Rakes, ridge cap, doors, insulation and accessories...

C. Primary and Secondary framing system.

1.2 RELATED WORK SPECIFIED ELSEWHERE

A.	Cast-in-Place Concrete	Section 03300
B.	Doors and Windows (if applicable)	Sections 08100, 8330, 08710
C.	Sheet Metal Roof Panels	Section 07613
D.	Mechanical Systems	Division 15
E.	Electrical Systems	Division 16

1.3 SYSTEM DESCRIPTION

A. Rigid frame with straight columns and roof beams and gable roof.

B. Bay Spacing: Dimension between main frames measured normal to frame (at centerline of frame) for interior bays, and dimension from centerline of first interior main frame measured normal to end wall (outside face of end-wall girt) for end bays per plans.

C. Primary Framing: Rigid frame of rafter beams and columns, canopy beams, intermediate columns, end wall columns, and wind bracing.

D. Secondary Framing: Purlins, girts, eave struts, sill supports, clips and other items detailed.

E. Wall System: Preformed metal panels of vertical profile, with sub-girt framing/anchorage assembly, and accessory components.

F. Roof System: Preformed metal panels of upslope standing seam profile, with sub-girt framing/anchorage assembly, insulation and accessory components.

G. Roof Slope: per plans

H. Anchor bolts as specified by the building Manufacturer.

1.4 DESIGN REQUIREMENTS

A. Building construction shall meet the specific performance criteria specified herein and in the drawings.

B. Design members to withstand dead load, applicable snow load, and design loads due to pressure and suction of wind calculated in accordance with International Building Code (IBC), 2003, design load schedule and loads imposed by industrial equipment and mechanical, electrical systems.

C. Structural Framing: Design primary and secondary structural members and exterior covering materials for applicable load combinations in accordance with the Metal Building Manufacturer's Association's (MBMA) "Design Practices Manual". Primary structural frames shall be designed as pinned - based frames. Lateral drift of primary frames shall be limited to the eave height (in inches) / 240.

D. Structural Steel: For the design of structural steel members, comply with the requirements of the American Institute of Steel Construction (AISC) "Specifications for the Design, Fabrication and Erection of Structural Steel for Buildings" for design requirements and allowable stresses. Total load deflections shall be limited to L/240.

E. Light Gage Steel: For the design of light gage steel members, comply with the requirements of the American Iron and Steel Institute's (AISI) "Specification for the Design of Cold Formed steel Structural Members" and "Design of Light Gage Steel Diaphragms" for design requirements and allowable stresses. Total load deflections shall be limited to L/240.

F. For welded connections, comply with the American Welding Society's (AWS) "Standard Code for Arc and Gas Welding in Building Construction" for welding procedures.

G. Tolerances: Fabrication shall conform to the fabrication tolerances published in the MBMA "Common Industry Practices".

H. Design Loads: Basic design loads, as well as collateral loads, are as specified.
1. Basic design loads include, in addition to dead load, live load and wind load.
2. Collateral loads include additional dead loads over and above the weight of the metal building system such as mechanical and electrical systems.
3. Design each member to withstand stresses resulting from combinations of loads that produce the maximum allowable stresses in that member as prescribed in MBMA's "Design Practices Manual" Section 9 of Design Practices.

I. Design members to withstand UL 580 - Uplift Resistance, Uplift Class 90 as tested by the Building Manufacturer, or wind load per IBC, whichever is more stringent.

J. Exterior wall and roof system shall withstand imposed loads with maximum allowable deflection of span: L/240.

K. Provide drainage to exterior for water entering or condensation occurring within wall or roof system.

L. Permit movement of components without buckling, failure of joint seals, undue stress on fasteners or other detrimental effects, when subject to temperature range of 150 Degrees F (65.6 Degrees C).

M. Thermal Performance:
1. Thermal Resistance of Calculated Wall System: R Value of 19 at conditioned space
2. Thermal Resistance of Calculated Wall System: R Value of 10 at semi-heated space
3. Thermal Resistance of Calculated Roof System: R Value of 30 at conditioned space
4. Thermal Resistance of Calculated Roof System: R Value of 10 at semi-heated space

1.5 SUBMITTALS FOR REVIEW

A. Submittals: Procedures for submittals Section 01300

B. Product Data: Provide data on profiles, component dimensions, fasteners and structural properties. Test results from certified lab on each panel system... Performance test results for wind uplift resistance per UL 580, clip to panel strength per ASTM E 1592-95, air infiltration per ASTM E 283-84.

C. Shop Drawings: Indicate assembly dimensions, locations of structural members, connections, attachments, openings, cambers, loads, and all associated items; wall and roof system dimensions, wall and roof panel layout, general construction details, anchorages and method of anchorage, method or installation; framing anchor bolt settings, sizes, and locations from datum and foundations loads; indicate welded connections with AWS A2.0 welding symbols; indicate net weld length; all design loads. Provide drawings and calculations sealed and signed by a professional engineer licensed to practice in the State of Texas.

D. Samples for Initial Selection: For each type of building component with factory-applied color finish

E. Samples for Verification: For each type of exposed finish required, prepared on Samples of sizes indicated below, in size illustrating color and texture of finish; fasteners, sealants and closers.
1. Metal Roof and Wall Panels: Nominal 12 inches long by actual panel width. Include fasteners, closures, and other exposed panel accessories.
2. Flashing and Trim: Nominal 12 inches long. Include fasteners and other exposed accessories.
3. Vapor Retarders: Nominal 6-inch- square Samples.
4. Accessories: Nominal 12-inch- long Samples for each type of accessory

F. Metal Panel System Fabrication Certification: Submit a letter from the metal building Manufacturer certifying that the wall and roof panels have been produced in a factory environment (not job site roll formed) with fixed-base roll forming equipment.

G. Product Certificates: For each type of metal building system, signed by product Manufacturer.
   1. Letter of Design Certification: Signed and sealed by a qualified professional engineer. Include the following:
      a. Name and location of Project
      b. Order number
      c. Name of Manufacturer
      d. Name of Contractor
      e. Building dimensions including width, length, height, and roof slope
      f. Indicate compliance with AISC standards for hot-rolled steel and AISI standards for cold-rolled steel, including edition dates of each standard.
      g. Governing building code and year of edition
      h. Design Loads: Include dead load, roof live load, collateral loads, roof snow load, deflection, wind loads/speeds and exposure, seismic design category or effective peak velocity-related acceleration/peak acceleration, and auxiliary loads (cranes).
      i. Load Combinations: Indicate that loads were applied acting simultaneously with concentrated loads, according to governing building code.
      j. Building-Use Category: Indicate category of building use and its effect on load importance factors.

H. Welding certificates.

I. Erector Certificate: Signed by Manufacturer certifying that erector complies with requirements.

J. Manufacturer Certificate: Signed by Manufacturer certifying that products comply with requirements.

K. Qualification Data: For Erector and Manufacturer.

L. Material Test Reports: Signed by Manufacturers certifying that the following products comply with requirements:
   1. Structural steel including chemical and physical properties
   2. Bolts, nuts, and washers including mechanical properties and chemical analysis
   3. Tension-control, high-strength, bolt-nut-washer assemblies
   4. Shop primers
   5. Non-shrink grout

M. Surveys: Have registered surveyor confirm location of anchor bolts prior to placement of concrete.

N. Warranties: Special warranties specified in this Section.

1.6 SUBMITTALS FOR INFORMATION

A. Submittals: Procedures for submittals Section 01300.

B. Manufacturer's Instructions: Indicate preparation requirements, anchor bolt placement, structural loads on base plate anchors, and accessories.

C. Erection Drawings: Indicate members by label, assembly sequence, and temporary erection bracing.

1.7 SUBMITTALS FOR CLOSEOUT

A. Project Record Documents: Record actual locations of concealed components and utilities. Record any changes to Construction Documents during construction and provide original As-Built set to TxDOT Representative at end of project. Contractor is required to maintain As-Built set on site and when changes occur. Progress Payments will be based on maintaining current As-Built set on a monthly basis and will be checked by the TxDOT Representative.

B. Upon completion of erection submit written Certification prepared and signed by the design Professional Engineer, qualified herein, attesting to his/her field verification of the erection being in accordance with his/her shop drawings.

1.8 QUALITY ASSURANCE

A. Perform Work in accordance with AISC - Quality Certification Program Category MB. MBMA - Metal Building Systems Manual and MBMA - Low Rise Building Systems Manual. Maintain one copy on site.

B. Manufacturer Qualifications: Company specializing in manufacturing the Products specified in this section with minimum five years documented experience.

C. Erector Qualifications: Company specializing in performing the work of this Section with minimum of five years documented experience and approved by Manufacturer. Project Foreman must have specific training in proper installation of specified wall and roof systems with certification. Submit five references from five different architects or owners for systems that have been installed for at least two years and stating that the performance has been satisfactory.

D. Design structural components, develop shop drawings, and perform shop and site work under direct supervision of a Professional Structural Engineer Experienced in design of this work and licensed in the State of Texas.

E. Source Limitations: Obtain primary metal building system components, including structural framing and metal panel assemblies, through one source from a single Manufacturer.

F. Product Options: Drawings indicate size, profiles, and dimensional requirements of metal building system and are based on the specific system indicated. Refer to Division 1 Section "Product Requirements."

1. Do not modify intended aesthetic effects, as judged solely by Architect, except with Architect's approval. If modifications are proposed, submit comprehensive explanatory data to Architect for review.

G. Retain "Welding certificates" Paragraph in "Submittals" Article with first paragraph below. AWS states that welding qualifications remain in effect indefinitely unless welding personnel have not welded for more than six months or there is a specific reason to question their ability.

H. Welding: Qualify procedures and personnel according to AWS D1.1, "Structural Welding Code-Steel," and AWS D1.3, "Structural Welding Code-Sheet Steel."

I. Surface-Burning Characteristics: Provide field-insulated metal panels having thermal insulation and vapor-retarder-facing materials with the following surface-burning characteristics as determined by testing identical products per ASTM E 84 by UL or another testing and inspecting agency acceptable to authorities having jurisdiction:

1. Flame-Spread Index: 25 or less, unless otherwise indicated
2. Smoke-Developed Index: 450 or less, unless otherwise indicated

J. A Pre-Erection Conference: Conduct conference at Project site to comply with requirements in Division 1 Section "Project Management and Coordination." Review methods and procedures related to metal building systems including, but not limited to, the following:

1. Inspect and discuss condition of foundations and other preparatory work performed by other trades.
2. Review structural load limitations.
3. Review and finalize construction schedule and verify availability of materials, Erector's personnel, equipment, and facilities needed to make progress and avoid delays.
4. Review required testing, inspecting, and certifying procedures.
5. Review weather and forecasted weather conditions and procedures for unfavorable conditions.

K. Pre-installation Roof Assembly Conference: Conduct conference at Project site to comply with requirements in Division 1 Section "Project Management and Coordination." Review methods and procedures related to metal roof panel assemblies including, but not limited to, the following:

1. Examine purlin and rafter conditions for compliance with requirements, including flatness and attachment to structural members.
2. Review structural limitations of purlins and rafters during and after roofing.
3. Review flashings, special roof details, roof drainage, roof penetrations, equipment curbs, and condition of other construction that will affect metal roof panels.
4. Review temporary protection requirements for metal roof panel assembly during and after installation.
5. Review roof observation and repair procedures after metal roof panel installation.

1.9 DELIVERY, STORAGE AND HANDLING

A. Delivery and receipt of materials shall be in accordance with the MBMA "Common Industry Practices".

B. Deliver and store prefabricated components, sheets, panels and other manufactured items so they will not be damaged or deformed.

C. Stack materials on platforms or pallets, covered with tarpaulins or other suitable weather tight ventilated covering. Cover metal sheets or panels so that water accumulations will drain freely. Do not store sheets or panels in contact with other materials that might cause staining. Elevate one of stored metal sheets and panels so as to positively drain water and prevent "white" rust.

1.10 REGULATORY REQUIREMENTS

A. Conform to IBC, 2003 code for submission of design calculations, reviewed shop and erection drawings, and as required for acquiring permit.

B. Cooperate with regulatory agency or authority and provide data as required.

1.11 PRE-INSTALLATION MEETING

A. Section 01300 - Administrative Requirements: Pre-installation meeting.

B. Convene two weeks before starting work of this section.

1.12 WARRANTY

A. Provide a 20 (twenty) year No Dollar Limit warranty to include coverage for exterior pre-finished surfaces to cover pre-finished color coat against chipping, cracking or crazing, blistering, peeling, chalking or fading.

B. Provide a 20 (twenty) year warranty covering bare metal against rupture, structural failure and perforation due to normal atmospheric corrosion exposure.

C. Provide 20 (twenty) year No Dollar Limit coverage for weather tightness of building enclosure elements after installation.

PART 2 - PRODUCTS

2.1 MANUFACTURERS - BUILDING SYSTEM

A. Manufacturers:
1. Alliance Steel, Inc.
2. Butler Manufacturing Company
3. Ceco Building Systems; Division of Robertson-Ceco Corporation

4. Mesco Metal Buildings; Division of NCI Building Systems, LLP
5. Metallic Metal Building Company; Division of NCI Building Systems, LLP
6. Star Building Systems; Division of Robertson-Ceco Corporation
7. Other acceptable Manufacturers offering equivalent products must be submitted as a substitution to be considered for approval.

2.2 MATERIALS – FRAMING

A. W-Shapes: ASTM A 992/A 992M; ASTM A 572/A 572M, Grade 50 or 55.

B. Structural Tubing: ASTM A500, Grade B.

C. Channels, Angles, M-Shapes, and S-Shapes: ASTM A 36/A 36M; ASTM A 572/A 572M, Grade 50 or 55.

D. Plate and Bar: ASTM A 36/A 36M; ASTM A 572/A 572M, Grade 50 or 55; or ASTM A 529/A 529M, Grade 50 or 55.

E. Steel Pipe: ASTM A 53/A 53M, Type E or S, Grade B.

F. Cold-Formed Hollow Structural Sections: ASTM A 500, Grade B or C, structural tubing.

G. Structural-Steel Sheet: Hot-rolled, ASTM A 1011/A 1011M, Structural Steel (SS), Grades 30 through 55, or High-Strength Low Alloy Steel (HSLAS), Grades 45 through 70; or cold-rolled, ASTM A 1008/A 1008M, Structural Steel (SS), Grades 25 through 80, or High-Strength Low Alloy Steel (HSLAS), Grades 45 through 70.

H. Metallic-Coated Steel Sheet: ASTM A 653/A 653M, Structural Steel (SS), Grades 33 through 80 or High-Strength Low Alloy Steel (HSLAS), Grades 50 through 80; with G60 coating designation; mill phosphatized.

I. Metallic-Coated Steel Sheet Prepainted with Coil Coating: Steel sheet metallic coated by the hot-dip process and prepainted by the coil-coating process to comply with ASTM A 755/A 755M.
   1. Zinc-Coated (Galvanized) Steel Sheet: ASTM A 653/A 653M, Structural Steel (SS), Grades 33 through 80 (230 through 550) or High-Strength Low Alloy Steel (HSLAS), Grades 50 through 80 (340 through 550); with G90 (Z275) coating designation.
   2. Aluminum-Zinc Alloy-Coated Steel Sheet: ASTM A 792/A 792M, Structural Steel (SS), Grade 50 or 80; with Class AZ50 coating.

J. Non-High-Strength Bolts, Nuts, and Washers: ASTM A 307, Grade A, carbon-steel, hex-head bolts; ASTM A 563 carbon-steel hex nuts; and ASTM F 844 plain (flat) steel washers.
   1. Finish: Plain

K. High-Strength Bolts, Nuts, and Washers: ASTM A 325, Type 1, heavy hex steel structural bolts; ASTM A 563 heavy hex carbon-steel nuts; and ASTM F 436 hardened carbon-steel washers.
   1. Finish: Plain

L. Tension-Control, High-Strength Bolt-Nut-Washer Assemblies: ASTM F 1852, Type 1, heavy-hex-head steel structural bolts with splined ends.
   1. Finish: Plain

M. Unheaded Anchor Rods: ASTM A 36/A 36M.
   1. Configuration: Straight
   2. Nuts: ASTM A 563 heavy hex carbon steel
   3. Plate Washers: ASTM A 36/A 36M carbon steel
   4. Washers: ASTM F 436 hardened carbon steel
   5. Finish: Plain
   6. Nuts: ASTM A 563 heavy hex carbon steel
   7. Plate Washers: ASTM A 36/A 36M carbon steel
   8. Washers: ASTM F 436 hardened carbon steel
   9. Finish: Plain

N. Threaded Rods: ASTM A 36/A 36M.
   1. Nuts: ASTM A 563 heavy hex carbon steel
   2. Washers: ASTM A 36/A 36M carbon steel
   3. Finish: Plain

O. Cold Forming Members: ASTM 607 Grade 50 Zinc Coated Steel STM 446-G90.

P. Welding Materials: AWS D1.1; type required for materials being welded.

Q. Primer: SSPC 20, Red oxide.

R. Grout: ASTM C1107, Non-shrink type, premixed compound consisting of non-metallic aggregate, cement, water reducing and plasticizing agents, capable of developing minimum compressive strength of 2400 psi (17 MPa) in two days and 7000 psi (48 MPa) in 28 days.

2.3 DESIGN LOADS

A. Roof Live Loads (Applies to the horizontal projection):
   1. 20 PSF: 0-200 SF tributary area
   2. 16 PSF: 200-600 SF tributary area
   3. 12 PSF: Over 600 SF tributary area

B. Roof Covering: 50 Psf or a 200 pound concentrated load located at center of maximum roof panel span.

C. Auxiliary Loads:
   1. Concentrated Loads: See mechanical and electrical, carefully coordinate and accommodate all items.

2. Provide support beams in addition to the roof purlins to support loads greater than 500 pounds.
3. Reference Structural, Mechanical, and Architectural documents for additional concentrated loads. Coordinate and accommodate additional loads imposed on structural by attached items.

2.4 DESIGN OF PRIMARY FRAMING

A. In the design of primary framing members, wind pressures shall be calculated in accordance with IBC, Wind Speed requirements Primary frames shall be designed with pinned bases.

2.5 BASIC DESIGN WIND PRESSURE (Wall Components, girts and wall panels):

A. Wind Speed: per IBC wind load requirements and per code for the project location, Texas.

B. Wind pressures on parts and portions shall be calculated in accordance with the MBMA "Design and practices Manual".

2.6 DESIGN LOAD COMBINATIONS

A. Dead/Live/Wind: Loading combinations of dead load, live load and wind loads shall be in accordance with MBMA recommendations, Section 9 of Design Practices.

2.7 MATERIALS - WALL LINER AND ROOF SYSTEM

A. Sheet Metal Roof as specified in section 07413.

B. Insulation: In accordance with design requirement section.

C. Restrain insulation with galvanized poultry net at roof.

D. Joint Seal Gaskets: Manufacturer's standard EPDM type.

2.8 METAL DOORS AND FRAMES

A. Doors: Specified in Section 08110.

B. Frames: Specified in Section 08115.

2.9 COILING DOORS

A. Overhead Coiling Doors: Specified in Section 08333.
1. Overhead Door Frame: Formed steel sections braced to building frame.

2.10 METAL BUILDING CURBS - See Roof Plan & Details

A. Refer to Section 07614 Metal Roof Curbs.

2.11 FABRICATION - FRAMING

A. Fabricate members in accordance with AISC Specification for plate, bar, tube or rolled shapes.

B. Anchor Bolts: Formed with bent or straight shank, assembled with template for casting into concrete.

C. Provide framing for doors, windows, ventilators, and louver openings.

2.12 FRAMING MEMBER THICKNESS (MINIMUMS)

A. Cold-Formed Primary Framing Members: 14 gage.

B. Cold-Formed Secondary Framing Members: 16 gage.

C. Intermediate Pipe Columns: 3/16".

D. Webs of Welded Built-up Members: 1/8".

E. Flanges of Welded Built-Up Members: 3/16".

F. Bracing Rods: 1/2 " diameter.

2.13 TYPICAL FRAMING COMPONENTS

A. Rigid Frames, Wind Unit Frames and Canopy Beams:
1. Fabricate rigid frames from hot-rolled structural steel. Provide built-up "I-Beam" shape rigid frames consisting of parallel flanged beams. Provide frames factory welded and shop painted. Furnish frames complete with attachment plates, bearing plates and splice members. Factory drill frames for bolted field assembly.
2. Provide length of span and spacing of frames as indicated. Slight variations in length of span and frame spacing may be acceptable if necessary to meet Manufacturer's standard.

B. Bearing End Frames: Consist of columns at the building corners and a continuous rafter beam supported by the end wall columns.

C. End wall Columns: 8 inch min. deep cold-formed "C" sections or welded built-up "I" shapes.

D. Purlins and Girts: Roll-Formed "Z" sections or open web joists, depth as required.

E. Eave Struts: "C" sections formed so as to provide adequate backup for both roof and wall panels at the building eaves.

F. Wind Bracing (When required)

1. Method: Diagonal rod bracing in both roof and sidewalls as required by calculations.
2. Reinforcing: Double roof purlins, inter-connected by diaphragms, in between the rigid frames at all points of attachment of diagonal roof bracing.
3. Provide temporary bracing during erection of structure.

G. Wind Bracing Omission: Permissible where the diaphragm strength of the roof covering is adequate to resist the longitudinal wind forces. Diaphragm action shall not be assumed for standing seam roof system.

H. Flange Bracing: Inside flange of all rigid frames shall be braced laterally by angles connected to the flange and web of the frame and to the web of the purlin or girt so that the allowable compressive stress is adequate for any combination of loading.

I. Base Support: A continuous member shall be provided to which the base of the wall covering may be attached. This member shall be:
1. A continuous 18 gage; 1.25 ounce coating class, galvanized, box-shaped member cast integrally with concrete foundation or 3 x 3 x 1/4" (76 x 76 x 6.4 mm) steel angle anchored to slab with 3/8 inch (9.5 mm) bolt and expand shield at 48 inch (1.22 m) centers; zinc coated 1.80 coating class.

J. Framed Openings: Structural framing members for all openings shall be adequate for the specified design loads. Framing members who are exposed to weather shall be galvanized steel.

K. Bolts: ASTM A325 bolts tightened by the calibrated wrench method shall have a hardened washer under the element (nut and bolt head) turned in tightening.

2.14 FABRICATION - WALL AND ROOF SYSTEMS

A. Expansion Joints: Same material and finish as adjacent material where exposed, (.0359) inch (.91mm) thick, Manufacturer's standard brake formed Infill type, of profile to suit system.

B. Flashings, Closure Pieces, Fascia, Infills, Caps, and accessories: Same material and finish as adjacent material, profile to suit system or formed as detailed, 24 gauge minimum.

C. Ventilator: Specification Division 15000 Mechanical and 16000 Electrical.

D. Wall Louvers: See specifications section 15 and Mechanical drawings

E. Roof Curbs, Pipe Flashing:
1. Roof Curbs: Section 07614 Prefabricated Metal Building Roof Curbs
2. Pipe Flashing: E.P.D.M. rubber or Dupont "Nordel"; sized to fit pipes

F. Batt Insulation: Refer Section 07213 Batt Insulation.

2.15 WEATHER-SEAL SCREWS

A. Type: No. 12-14 self-drilling or self-tapping.

B. Screw Shank: Carbon steel, plated with 0.0003" zinc or cadmium.

C. Washers: Recessed into head; neoprene, EPDM, PVC.

D. Head: 3/8" (9.5 mm) hex drive.

E. Head Cap: Zamak alloy or stainless steel.

F. Paint Finish:
1. Required, except, on unpainted panels
2. Color to match panels
3. Paint durability to match panels

2.16 SEALER

A. Locations: Sidelaps, endlaps and flashing. In addition, seal to abutting construction to make a water and airtight seal.

B. Material:
1. General Description: Fiber-filled, pressure sensitive tape, non-asphaltic, non-shrinking, non-drying, and non-toxic and shall have superior adhesion metals, plastics and painted surfaces at temperatures from 30 Degrees to +160 Degrees F. The material shall have a flashpoint of at least 300 Degrees F, and shall not flow at 200 Degrees F.
2. Minimum Specification: Equal to Gov. Spec. No. MIL-C-18969, Type II, Class B.
3. Size: 1/2" x 3/32" or 1" x 1/8".

2.17 FLASHING AND TRIM

A. Locations: At the rake, corners and eaves; at framed openings and whenever necessary to provide weather tightness and finished appearance.

B. Ridge Panel: Formed to match the slope and profile or adjoining panels. Provide continuous ridge vent.

C. Material, Finish: Match painted wall panels.

2.18 CLOSURES (PROFILE)

A. Solid or closed cell, preformed Ethylene-Propylene-Diene-Monomer (EPDM) or Ethylene Propylene Terpolymer (EPT) color gray, matching the profile of the panel.
1. Closures: Provide closures at eaves and rakes, fabricated of same material as metal wall panels.
2. Closure Strips: Closed-cell, expanded, cellular, rubber or crosslinked, polyolefin-foam or closed-cell laminated polyethylene; minimum 1-inch- thick, flexible closure strips; cut or premolded to match metal wall panel profile.

Provide closure strips where indicated or necessary to ensure weather tight construction.

2.19 FABRICATION GUTTERS AND DOWNSPOUTS

A. Fabricate of same material and finish as roofing metal.

B. Form gutters and downspouts of profile and size to collect and remove water. Fabricate with connection pieces.

C. Form sections in maximum possible lengths. Hem exposed edges. Allow for expansion at joints not to exceed 50 feet (15 m) spacing.

D. Fabricate support straps of same material and finish as roofing metal, color as selected.

2.20 FINISHES

A. Primarily Framing Members: Clean, prepare and shop prime to SSPC Manual requirements. Do not prime surfaces to be field welded.

B. Exterior Surfaces of Wall and Roof Components and Accessories: Precoated enamel on steel of fluorocarbon Kynar 500 finish, color as selected by architect.

C. Interior Surfaces of Wall Under Panel Components and Accessories: Precoated enamel on steel of fluorocarbon Kynar 500 finish, white color.

PART 3 - EXECUTION

3.1 EXAMINATION

A. Verify that foundation, floor slab, mechanical and electrical utilities, and placed anchors are in correct position.

3.2 ERECTION

A. Erect metal building system according to Manufacturer's written erection instructions and erection drawings.

B. Erect framing in accordance with AISC Specification.

C. Provide for erection and wind loads. Provide temporary bracing to maintain structure plumb and in alignment until completion of erection and installation of permanent bracing. Locate braced bays as indicated.

D. Base and Bearing Plates: Clean concrete- and masonry-bearing surfaces of bond-reducing materials, and roughen surfaces prior to setting plates. Clean bottom surface of plates.

1. Set plates for structural members on wedges, shims, or setting nuts as required.

2. Tighten anchor rods after supported members have been positioned and plumbed. Do not remove wedges or shims but, if protruding, cut off flush with edge of plate before packing with grout.
3. Promptly pack grout solidly between bearing surfaces and plates so no voids remain. Neatly finish exposed surfaces; protect grout and allow to cure. Comply with Manufacturer's written installation instructions for shrinkage-resistant grouts.

E. Do not field cut or alter structural members without approval.

F. After erection, prime welds, abrasions, and surfaces not shop primed.

3.3 ERECTION - PURLINS AND GIRTS

A. Provide rake or gable purlins with tight fitting closure channels and fascias.

B. Locate and space wall girts to suit door and window arrangements and heights.

C. Secure purlins and girts to structural framing and hold rigidly to a straight line by sag rods.

D. Purlins under steel roof decking to receive single ply roofing shall be spaced a maximum of 5 feet on centers or as shown on drawings.

3.4 ERECTION - BRACING

A. Provide diagonal rod or angle bracing in both roof and sidewalls as required.

B. Movement resisting frames may be used in lieu of sidewall rod bracing, to suit Manufacturer's standards.

C. Where diaphragm strength of roof coverage is adequate to resist wind forces, rod or other forms of bracing may be omitted.

3.5 ERECTION - FRAMED OPENINGS

A. Provide steel angles and bent plates to reinforce openings and to carry loads and vibrations imposed, including equipment furnished under mechanical and electrical work. Securely attach to building structural frame.

B. Provide 2 x 2 x 1/4 inch (50.8 x 50.8 x 6.4 mm) steel angles for openings 6 to 18 inches (152 to 457 mm) in size. Openings over 18 inches (457 mm) in size shall be reinforced with 4 x 4 x 1/4 inch (102 x 102 x 6.4 mm) steel angles in accordance with Section 05210. At roof curbs, where indicated, reinforce openings with 6 x 6 x 1/4 inch (152 x 152 x 6.4 mm) steel angles and 1/4 inch (6.4 mm) bent plates.

3.6 ERECTION - WALL AND ROOFING SYSTEM

A. Install in accordance with Manufacturer's instructions. Examination: Examine primary and secondary framing to verify that structural panel support members and anchorages have been installed within alignment tolerances required by Manufacturer.
   1. Examine roughing-in for components and systems penetrating metal panels to verify actual locations of penetrations relative to seam locations of metal panels before metal panel installation.

B. Exercise care when cutting pre-finished material to ensure cuttings do not remain on finish surface.

C. Fasten cladding system to structural supports, aligned level and plumb.

D. Locate end laps over supports. End laps minimum 6 inches (152 mm). Place side laps over bearing.

E. Provide expansion joints in accordance with Manufacturers' recommendation.

F. Use concealed fasteners at roof.

G. Use exposed fasteners at walls.

H. Install insulation and vapor retarder utilizing squeeze for attachment. Place wire mesh under vapor retarder for support between framing members.

I. Roof Panels: General: Provide metal roof panels of full length from eave to ridge, unless otherwise indicated or restricted by shipping limitations.
   1. Field-Assembled, Standing-Seam Metal Roof Panels: Fasten metal roof panels to supports with concealed clips at each standing-seam joint at location, spacing, and with fasteners recommended by Manufacturer.
      a. Install ridge caps as metal roof panel work proceeds.
      b. Flash and seal metal roof panels with weather closures at eaves and rakes. Fasten with self-tapping screws.
      c. Install clips to supports with self-tapping fasteners.
      d. Install pressure plates at locations indicated in Manufacturer's written installation instructions.
      e. Retain subparagraph above or first subparagraph below; coordinate with products selected in Part 2.
      f. Seamed Joint: Crimp standing seams with Manufacturer-approved motorized seamer tool so clip, metal roof panel, and factory-applied sealant are completely engaged.
      g. Rigidly fasten eave end of metal roof panels and allow ridge end free movement due to thermal expansion and contraction. Predrill panels for fasteners.
      h. Provide metal closures at peaks, rake edges, rake walls, and each side of ridge caps.

J. Sidewall Panels: Continuous from eave line to below the column base plated. Lap-Seam Metal Panels: Install screw fasteners with power tools having controlled torque adjusted to compress neoprene washer tightly without damage to washer, screw threads, or metal panels. Install screws in predrilled holes.

1. Arrange and nest side-lap joints so prevailing winds blow over, not into, lapped joints. Lap ribbed or fluted sheets one full rib corrugation. Apply metal panels and associated items for neat and weathertight enclosure. Avoid "panel creep" or application not true to line.

K. End wall Panels: All end wall panels shall be continuous to the roof line except where panel lengths are exceeded. Where panel lengths are exceeded, end wall panels shall be continuous to the eave line with panels above the eave line continuous to the roof line. Panels spliced at the eave line shall be square cut. Panels continuous to roof line shall be bevel cut to correspond to the roof slope. All end laps for end wall panels where required shall be a minimum of 4 inches and shall occur at a wall girt.

L. Roof Laps: Before securing, roof panels shall be sealed with a continuous ribbon of tape sealer, unless the optional anti-capillary groove is specified.

M. Roof Fastenings:

1. Roof panels shall be secured with concealed panel clips that are secured to secondary structure per Manufacturer’s requirements.
2. Side laps of roof panels shall be mechanically.

N. Wall Fastenings:

1. Wall panels shall be secured to girts with minimum No. 14 sheet metal screws at a maximum spacing of 12 inches.
2. At the endlaps of rib sheets, the maximum spacing shall be 6 inches (152 mm).
3. At the endlaps of "Hi-Rib" panels the fasteners shall be attached each side of the major rib.
4. At the sidelaps of "A" panels No.10 sheet metal screws shall be placed a maximum of 18 inches (457) mm) on center.

O. Joint Sealers: Install gaskets, joint fillers, and sealants where indicated and where required for weatherproof performance of metal panel assemblies. Provide types of gaskets, fillers, and sealants indicated or, if not indicated, types recommended by metal panel Manufacturer.

1. Seal metal panel end laps with double beads of tape or sealant, full width of panel. Seal side joints where recommended by metal panel Manufacturer.
2. Prepare joints and apply sealants to comply with requirements in Division 7 Section "Joint Sealants."

P. Metal Protection: Where dissimilar metals will contact each other or corrosive substrates, protect against galvanic action by painting contact surfaces with bituminous coating, by applying rubberized-asphalt underlayment to each contact surface, or by other permanent separation as recommended by metal roof panel Manufacturer.

3.7 ERECTION - GUTTER AND DOWNSPOUT

A. Rigidly support and secure components. Joint lengths with formed seams sealed watertight. Flash and seal gutters to downspouts.

B. Apply bituminous paint on surfaces in contact with cementitious materials

C. Slope gutters minimum 1/8 inch/ft (3 mm/m).

D. Install Pre-cast concrete splash blocks 18 x 36 inch (457 x 914 mm) under each downspout.

3.8 INSTALLATION LINER PANELS

A. Inspection:
1. Check supporting members for correct layout and alignment.
2. Verify that surfaces to receive liner panels are free of debris.
3. Do not proceed with installation until defects are corrected.

B. Installation
1. Install liner panels and accessories in accordance with the Manufacturer’s instructions.
2. Do not stretch or compress panel side-lap interlocks.
3. Secure panels without warp or deflection.

3.9 INSTALLATION - ACCESSORIES

A. Install door frame, door, exhaust fan, overhead door, accessories, window and glass, and louvers in accordance with Manufacturer's instructions.

B. Seal wall and roof accessories watertight and weather tight with sealant.

C. Batt Insulation- General: Install insulation concurrently with metal wall panel installation, in thickness indicated to cover entire wall, according to Manufacturer's written instructions.
1. Set vapor-retarder-faced units with vapor retarder to warm side of construction, unless otherwise indicated. Do not obstruct ventilation spaces, except for firestopping.
2. Tape joints and ruptures in vapor retarder, and seal each continuous area of insulation to surrounding construction to ensure airtight installation.
3. Install factory-laminated, vapor-retarder-faced blankets straight and true in one-piece lengths with both sets of facing tabs sealed to provide a complete vapor retarder.
4. Blanket Roof Insulation: Comply with the following installation method:
   a. Over-Framing Installation: Extend insulation and vapor retarder over and perpendicular to top flange of secondary framing members. Hold in place by metal roof panels fastened to secondary framing.

b. Retainer Strips: Install retainer strips at each longitudinal insulation joint, straight and taut, nesting with secondary framing to hold insulation in place.

5. Blanket Wall Insulation: Extend insulation and vapor retarder over and perpendicular to top flange of secondary framing members. Hold in place by metal wall panels fastened to secondary framing.
   a. Retainer Strips: Install retainer strips at each longitudinal insulation joint, straight and taut, nesting with secondary framing to hold insulation in place.

3.10 TOLERANCES

A. Framing Members: 1/4 inch (6 mm) from level; 1/8 inch (3 mm) from plumb

B. Siding and Roofing: 1/8 inch (3 mm) from true position.

3.11 FIELD QUALITY CONTROL

A. Testing Agency: Owner will engage a qualified testing and inspecting agency to perform the following tests and inspections and to submit reports.

B. Tests and Inspections:
   1. High-Strength, Field-Bolted Connections: Connections shall be tested at the Owners discretion and inspected during installation according to RCSC's "Specification for Structural Joints Using ASTM A 325 or A 490 Bolts."
   2. Welded Connections: In addition to visual inspection, field-welded connections shall be tested at the Owners discretion and inspected according to AWS D1.1 and the following inspection procedures, at inspector's option:
      a. Liquid Penetrant Inspection: ASTM E 165
      b. Magnetic Particle Inspection: ASTM E 709; performed on root pass and on finished weld. Cracks or zones of incomplete fusion or penetration will not be accepted.
      c. Ultrasonic Inspection: ASTM E 164
      d. Radiographic Inspection: ASTM E 94

C. Correct deficiencies in Work that test reports and inspections indicate do not comply with the Contract Documents.
   1. Contractor / Installer shall bare costs of re-inspections at work that did not comply.

3.12 CLEANING AND PROTECTION

A. Repair damaged galvanized coatings on galvanized items with galvanized repair paint according to ASTM A 780 and Manufacturer's written instructions.

B. Touchup Painting: After erection, promptly clean, prepare, and prime or reprime field connections, rust spots, and abraded surfaces of prime-painted structural framing, bearing plates, and accessories.

1. Clean and prepare surfaces by SSPC-SP 2, "Hand Tool Cleaning," or SSPC-SP 3, "Power Tool Cleaning."
2. Apply a compatible primer of same type as shop primer used on adjacent surfaces.

C. Metal Panels: Remove temporary protective coverings and strippable films, if any, as metal panels are installed. On completion of metal panel installation, clean finished surfaces as recommended by metal panel Manufacturer. Maintain in a clean condition during construction.
   1. Replace metal panels that have been damaged or have deteriorated beyond successful repair by finish touchup or similar minor repair procedures.

D. Louvers: Clean exposed surfaces that are not protected by temporary covering, to remove fingerprints and soil during construction period. Do not let soil accumulate until final cleaning.
   1. Restore louvers damaged during installation and construction period so no evidence remains of corrective work. If results of restoration are unsuccessful, as determined by Architect, remove damaged units and replace with new units.
      a. Touch up minor abrasions in finishes with air-dried coating that matches color and gloss of, and is compatible with, factory-applied finish coating.

END OF SECTION

SECTION 15050

BASIC MECHANICAL REQUIREMENTS

PART 1 - GENERAL

1.1 SECTION INCLUDES

A. Basic Mechanical Requirements specifically applicable to all Division 15 specifications.

1.2 REFERENCES, STANDARDS, AND REGULATORY REQUIREMENTS: The following state and local codes, ordinances, and industry standards shall be complied with on this project as applicable:

A. The "Authority Having Jurisdiction" for this project is the Owner, Texas Department of Transportation, as an Agency of the State of Texas. As such, it is required that the installation shall meet the minimum standards prescribed in the latest editions of the following listed codes and standards, which are made a part of these Specifications.

B. American National Standards Institute (ANSI): All current editions of applicable manuals and standards.

C. American Society of Mechanical Engineers (ASME): Boiler and Pressure Vessel Codes

D. Air Conditioning and Refrigeration Institute Standards (ARI): All standards related to refrigeration and air conditioning equipment and piping furnished under these Specifications.

E. Sheet Metal and Air Conditioning Contractors National Association, Inc. (SMACNA): All current editions of applicable manuals and standards.

F. Air Moving and Conditioning Association (AMCA): All current editions of applicable manuals and standards.

G. American Gas Association Publications (AGA): Directory of Approved Gas Appliances and Tested Accessories

H. American Society of Testing Materials (ASTM): All current editions of applicable manuals and standards.

I. National Fire Protection Association Standards (NFPA):
   1. NFPA No. 54, Gas Appliances, Piping, National Fuel Gas Code
   2. NFPA No. 70, National Electrical Code
   3. NFPA No. 72A, Local Protective Signaling Systems
   4. NFPA No. 72E, Automatic Fire Detectors
   5. NFPA No. 90A, Air Conditioning Systems
   6. NFPA No. 91, Blower & Exhaust Systems
   7. NFPA No. 101, Life Safety Code
   8. NFPA No. 211, Chimneys, Fireplaces and Vent Systems

9. NFPA No. 241, Standard for Safeguarding Construction, Alteration and Demolition Operations
10. NFPA No. 255, Method of Test of Surface Burning Characteristics of Building Materials
11. NFPA No. 258, Standard Research Test Method for Determining Smoke Generation of Solid Materials

J. National Electrical Manufacturers' Association (NEMA): All current editions of applicable manuals and standards.

K. Local Fire Department and the State Fire Marshall, as may be applicable to construction on this site.

L. National Sanitation Foundation (NSF): All current editions of applicable manuals and standards.

M. Occupational Safety and Health Act (OSHA): All applicable safety standards.

N. Texas Occupational Safety Act: All applicable safety standards.

O. International Building Code, latest edition.

P. Uniform Mechanical Code, latest edition.

Q. Uniform Plumbing Code, latest edition.

R. ASRAE 90.1 – State Energy Code, latest addition.

S. Refer to individual specification sections for additional Codes and Standards.

T. All materials and workmanship shall comply with all applicable state and national codes, specifications, and industry standards. In all cases where Underwriters' Laboratories, Inc. has established standards for a particular type material, such material shall comply with these standards. Evidence of compliance shall be the UL "label" or "listing" under re-examination service.

1.3 GENERAL MATERIALS AND EQUIPMENT REQUIREMENTS

A. Note that no asbestos-bearing, solvent based, or lead containing materials shall be used on this project. If any prohibited materials are installed, all of the material, including the underlying material, shall be removed and disposed of as required by local, state, and federal requirements.

B. The Contractor shall execute all work hereinafter specified or indicated on accompanying Drawings. Contractor shall provide all equipment necessary and usually furnished in connection with such work and systems whether or not mentioned specifically herein or on the Drawings.

C. The Contractor shall be responsible for fitting the material and apparatus specified in this division into the building and shall carefully lay out the specified work at the site to

conform with the structural conditions, to avoid all obstructions, to conform to the details of the installation and thereby to provide an integrated installation operating as a complete set of systems.

D. Verification of Dimensions: The Contractor shall be responsible for the coordination and proper relation of his work to the building structure and to the work of all trades. The Contractor shall visit the premises and become thoroughly familiarize with all details of the work and working conditions, to verify all dimensions in the field, and to advise the Design Engineer of any discrepancy before performing any work. Adjustments to the work required in order to facilitate a coordinated installation shall be made at no additional cost to the Owner or the Design Engineer.

E. The Mechanical, Plumbing, and associated Drawings are necessarily diagrammatic by their nature, and are not intended to show every connection in detail or every pipe or conduit in its exact location. These details are subject to the requirements of standards referenced elsewhere in these specifications, and structural and architectural conditions. The Contractor shall carefully investigate structural and finish conditions and shall coordinate the separate trades in order to avoid interference between the various phases of work. Work shall be organized and laid out so that it will be concealed in furred chases and suspended ceilings, etc., in finished portions of the building, unless specifically noted to be exposed. All work shall be installed parallel or perpendicular to the lines of the building unless noted otherwise.

F. When the Drawings do not give exact details as to the elevation of pipe, conduit and ducts, the Contractor shall physically arrange the systems to fit in the space available at the elevations intended with proper grades for the functioning of the system involved. Piping, exposed conduit and the duct systems are generally intended to be installed true and square to the building construction, and located as high as possible against the structure in a neat and workmanlike manner. The Drawings do not show all required offsets, control lines, pilot lines and other location details. Work shall be concealed in all finished areas.

G. Storage at Site: The Contractor shall not receive material or equipment at the job site until there is suitable space provided to properly protect equipment from rust, drip, humidity, and dust damage.

H. Capacities and capabilities of materials and equipment specified or scheduled for this project shall be not less than those indicated. In addition, the materials and equipment shall be such that no component or system becomes inoperative or is damaged because of startup or other overload conditions.

I. Conformance with Agency Requirements: Where materials or equipment are specified to be approved, listed, tested, or labeled by the Underwriters' Laboratories, Inc. (UL), or constructed and/or tested in accordance with the standards of the American Society of Mechanical Engineers (ASME) or the Air Moving and Conditioning Association (AMCA), the Contractor shall submit proof that the items furnished under this Section of the Specifications conform to such requirements. The label of the Underwriters Laboratories, Inc., applied to the item will be acceptable as sufficient evidence that the

items conform to such requirements. The ASME stamp and the AMCA label will be acceptable as sufficient evidence that the items conform to the respective requirements.

J. Nameplates: Each major component of equipment shall have the Manufacturer's name, address, and catalog number on a plate securely attached to the item of equipment. All data on nameplates shall be legible at the time of Final Inspection. Under no circumstances shall any nameplate be painted over for any reason. If a new or existing nameplate is painted over, the nameplate shall be restored to as new condition, or replaced with a new nameplate provided by the Manufacturer.

K. Protection from Moving Parts: Belts, pulleys, chains, gears, couplings, projecting setscrews, keys, and other rotating parts shall be fully enclosed or properly guarded for personnel protection.

1.4 DEFINITIONS (Note: These definitions are included here to clarify the direction and intention of this specification. The list given here is not by any means complete. For further clarification as required, Contractor shall contact the designated Owner's Representative.):

A. AND/OR: Where "and/or" is used in these Specifications or on the Drawings, it shall mean that situations exist where either one or both conditions occur or are required and shall not be interpreted to permit an option on the part of the Contractor.

B. APPROVE: Where used in conjunction with Architect's/Engineer's response to submittals, requests, applications, inquiries, reports and claims by Contractor, the meaning of term "approved" will be held to limitations to Architect's/Engineer's responsibilities and duties as specified in General and Supplementary Conditions. In no case will approval by Architect/Engineer be interpreted as a release of Contractor from responsibilities to fulfill requirements of contract documents or to extend Architect's/Engineer's responsibility into Contractor's area of construction supervision and job safety.

C. ARCHITECT (or DESIGN ARCHITECT): The "Architect" or "Design Architect" is defined as the architect whose seal appears on the construction specifications title page and on the drawings for the particular area under consideration.

D. AS REQUIRED: Where "as required" is used in these Specifications or on the drawings, it shall mean that situations exist that are not necessarily described in detail or indicated that may cause the Contractor certain complications in performing the work described or indicated. These complications entail the normal coordination activities expected of the Contractor where multiple trades are involved and new or existing construction causes deviations to otherwise simplistic approaches to the work to be performed. The term shall not be interpreted to permit an option on the part of the Contractor to achieve the end result.

E. AUTHORITY HAVING JURISDICTION: The Texas Department of Transportation, the Owner, as an agency of the State of Texas is the "Authority Having Jurisdiction" in any matter of code assignment, interpretation, etc., as applies to this project. In many cases, at the Owner's option, the Authority Having Jurisdiction may choose to apply the policies and procedures of an Authority not having jurisdiction, and as such, delegate its authority over some issues. In the event that some of its authority has been delegated to

another Authority, such delegation will be specifically delineated in these specifications. In many instances the sections of the specifications will include references which will indicate codes, standards, and regulations which have bearing on the project, and will be enforced by the Authority Having Jurisdiction. The Owner may, at its option and at any time, defer to a local jurisdiction as the Authority Having Jurisdiction. This action, if taken, shall not subrogate any of the authority of the Owner, nor have any bearing on other unrelated requirements of these specifications.

F. CONCEALED: "Concealed" areas are those areas which cannot be seen by the building occupants, such as inside walls or above ceilings.

G. DIRECTED, REQUESTED, etc.: Where not otherwise explained, terms such as "directed", "requested", "authorized", "selected", "approved", "required", "accepted", and "permitted" mean "directed by the Architect/Engineer," "requested by the Architect/Engineer" and similar phrases. However, no such implied meaning will be interpreted to extend the Architect's/Engineer's responsibility into Contractor's area of construction supervision and job safety.

H. ENGINEER (or DESIGN ENGINEER or ENGINEER OF RECORD): The "Engineer" or "Design Engineer" or "Engineer of Record" is defined as the engineer whose seal appears on the construction specifications title page and on the drawings for the particular area under consideration. Note that in some cases, the work of two or more Engineers may appear on the same drawing or document. In that case the area of responsibility of each Engineer will be noted in the area of each signed seal.

I. EXPOSED: "Exposed" areas are all areas which are exposed to view by the building occupants including under counters, inside cabinets and closets, plus all mechanical and electrical rooms.

J. FURNISH:
1. The term "furnish" is used to mean "supply and deliver to project site, ready for unloading, unpacking, assemble, installation, and similar operations."
2. Where "furnish" applies to work for which the installation is not otherwise specified "furnish" in such case shall mean "furnish and install."

K. INDICATED: The term "indicated" is a cross reference to graphic representations, notes or schedules on drawings, to other paragraphs or schedules in the specifications, and to similar means of communicating the requirements of the contract documents. Where terms such as "shown", "noted", "scheduled", and "specified" are used in lieu of "indicated", it is for the purpose of helping the reader locate the cross reference, and no limitation of location is intended except as specifically noted.

L. INSTALL: The term "install" is used to describe operations at project site including unloading, unpacking, assembly, erection, placing, anchoring, applying, working to dimension, finishing, curing, protecting, cleaning and similar operations.

M. OWNER: As used in these specifications, "Owner" means the Texas Department of Transportation, as represented by an assigned representative.

N. PROVIDE: The term “provide” means “to furnish and install, complete and ready for intended use.”

1.5 UTILITY CONNECTIONS AND INSPECTIONS

A. General: Refer to DIVISION 1 for construction phasing and time increments.

B. Fees and Costs: If, during the course of the construction, a need arises to purchase utilities, the Contractor shall pay all fees attendant thereto. If the City or other privately or publicly owned utility piping or electrical cable needs to be extended, relocated, or terminated, the Contractor shall pay all permits and construction/inspection fees associated with that particular work, the costs for which shall be included in the Contract price, including the cost of setting meters.

C. All work performed on this project is under the authority of the State of Texas, however, some local construction fees or construction or inspection permits may be required for new service taps, or new or modified connections to City or utility company controlled services. Refer to the Division 1 Section of specifications on “Special Conditions” for clarification, or contact the regulating entity directly. Note also that if inspections by personnel of jurisdictions other than TxDOT are specifically required by this document, then the Contractor is responsible for any fees or permits in connection to those requirements.

D. Compliance: The Contractor shall comply in every respect with all requirements of the National Fire Protection Association, the local Fire Department requirements and all utility company requirements. In no case does this relieve the Contractor of the responsibility of complying with these Specifications and Drawings where specified conditions are of higher quality or quantity than the requirements of the above-specified authorities. Where requirements of the Specifications and Drawings are more lenient than the requirements of the above authorities, the Contractor shall make installations in compliance with the requirements of the above authorities with no extra compensation.

1.6 COORDINATION OF THE CONTRACT DOCUMENTS

A. The interrelation of the Specifications, the Drawings, and the schedules are as follows: The Specifications determine the nature and quality of the materials and equipment, the Drawings establish the quantities, dimensions and details, and the schedules give the capacities and performance characteristics. If the Contractor requires additional clarification, a request shall be submitted in writing, and a response will be given in writing.

B. Should the Drawings or Specifications conflict within themselves, or with each other, the requirement with the greatest quantity and/or the highest quality shall prevail. The decision of the engineer of record for the system being installed shall be final.

1.7 FUTURE WORK

A. The work described in the drawings shall be performed under this contract. It shall be noted that certain equipment and systems have been sized to anticipate a possible future

addition to the building. It is imperative that the Contractor provide and install the equipment and systems as shown in the drawings and schedules, of the sizes, capacities and dimensions indicated.

1.8 SUBMITTALS

A. Submit under provisions of UGC (the "Uniform General Conditions") and Special Conditions Section of the Specifications, and as required herein.

B. Mark all submittal literature to indicate the precise selection of materials and equipment being submitted. Note that if the specific model or material is not indicated in the submittal, and there is more than one choice possible, the submittal may be rejected and resubmittal will be required.

C. Changes in Contract requirements will not be granted and shall not be implied by approval of submitted alternative materials and equipment. Changes will only be effected through the Change Order process, in writing.

D. Proposed Products List: Include all equipment and materials specified in the following sections:

1. 15060 – Supports and Anchors
2. 15090 – Piping Insulation
3. 15097 – Ductwork Insulation
4. 15210 – Reciprocating Air Compressors
5. 15400 – Plumbing, Piping and Associated Materials
6. 15540 – Fuel Fired Heaters
7. 15761 – Ductless Air Conditioning Systems
8. 15767 – Heat Pump Air Conditioning Systems
9. 15810 – Ductwork
10. 15820 – Ductwork Accessories
11. 15830 – Fans
12. 15850 – Air Outlets and Inlets
13. 15950 – Testing, Adjusting and Balancing

E. Provide submittals as required in each Division 15 section. Submit shop drawings and product data grouped to include complete submittals of related systems, products, and accessories in a single submittal.

F. Submit Fabrication Drawings whenever: 1) equipment proposed varies in physical size and arrangement from that indicated on the Drawings, thus causing rearrangement of equipment space, 2) where tight spaces require extreme coordination between ductwork, piping, conduit, and other equipment, 3) where called for elsewhere in these Specifications, and 4) where specifically requested by the Design Engineer. Fabrication Drawings shall be made at no additional charge to the Owner or the Design Engineer.

G. All required fabrication (shop) drawings, except as noted otherwise, shall be prepared at a scale of not less than 1/4" = 1'-0". Fabrication Drawings for ductwork and air handling units shall be drawn at a minimum scale of 3/8" = 1'-0". Submit three blueline prints of each Fabrication Drawing to the Design Engineer for review. Reproduction and submittal

of the Construction Documents is not acceptable. The Engineer will review the drawing and return one print with comments.

1.9 SUBSTITUTION OF MATERIALS AND EQUIPMENT

A. It is not the intent of the drawings and/or specifications to limit products to any particular Manufacturer or to discriminate against an "approved equal" product produced by another Manufacturer. Products of a particular Manufacturer may be mentioned to define a standard for acceptance and to serve as a reference in comparison with other products. On the other hand, when a Manufacturer's name appears in these specifications or in the drawings, it shall not be interpreted that the Manufacturer is unconditionally acceptable as a provider of equipment for this project. The successful Manufacturer or supplier shall meet all of the provisions of the appropriate specification and/or equipment schedule.

B. The specified products have been used in preparing the drawings and specifications and thus establish minimum qualities with which substitutes must be at least equal to be considered acceptable. The burden of proof of equality rests with the Contractor. The decision of the Engineer is final.

C. In the event that the Contractor submits a proposal for a substitution, and the review and negotiation of the substitution (if handled in a timely, expedited manner) results in a delay of the contract work, then a reasonable extension of time for the contract may be allowed.

1.10 MATERIALS AND WORKMANSHIP

A. All materials, unless noted otherwise, shall be new, free from all defects, suitable for the intended use, and of the best quality of their respective kinds.

B. Materials and equipment shall be installed in accordance with the Manufacturer's recommendations and the best standard practice for the type of work involved.

C. All work shall be executed by mechanics and Contractors skilled in their respective trades, and the installations shall provide a neat, precise appearance.

D. Materials and/or equipment damaged in shipment or otherwise damaged prior to installation shall not be repaired, but shall be replaced with new materials and/or equipment.

E. Similar equipment shall be products of the same Manufacturer. For example, all air conditioning equipment, systems and components shall be manufactured and supplied by the same Manufacturer. All faucets, stops and hosebibbs shall be products of the same Manufacturer, with the exception that freezeproof hosebibbs may be products of a different Manufacturer than the rest of the faucets on the project.

1.11 FLAME SPREAD PROPERTIES OF MATERIALS

A. Materials and adhesives incorporated into this project shall conform to NFPA Standard 255, "Method of Test of Surface Burning Characteristics of Building Materials." The

classification shall not exceed a flame spread rating of 25, nor exceed a smoke developed rating of 50, for all materials, adhesives, finishes, etc. specified for each system.

1.12 MANUFACTURER'S RECOMMENDATIONS

A. The Manufacturer's published directions and/or recommendations shall be followed in the delivery, storage, protection, installation, piping, and wiring of all equipment and material. The Contractor shall promptly notify the Engineer, in writing, of any conflict between the requirements of the Contract Documents and the Manufacturers' directions, and shall obtain the Engineer's guidance before proceeding with the work. Should the Contractor perform any such work that does not comply with the Manufacturers' directions or such instructions from the Owner, the Contractor shall bear all costs arising in connection with the deficiencies.

1.13 SPACE AND EQUIPMENT ARRANGEMENT

A. The physical size and space requirements of mechanical and electrical equipment indicated on the Drawings are approximate and based on the dimensions of a particular Manufacturer. While other Manufacturers may be acceptable, it is the responsibility of the Contractor to determine if the equipment proposed by the Contractor will fit in the space.

B. All equipment shall be installed in a manner to permit access to all surfaces. All valves, motors, drives, filters, and other accessory items shall be installed to allow for service requirements without disassembly of another part. Service space requirements recommended by Manufacturers shall be provided in the installation of the equipment as a minimum.

C. All equipment and piping shall be installed in a manner to provide the greatest amount of clearance for access and maintenance of systems and equipment. Installation of piping and equipment which blocks personnel access to all parts of chases or mechanical spaces is prohibited.

1.14 PROTECTION

A. The Contractor shall at all times take such precautions as may be necessary to properly protect all materials and equipment from damage from the time of delivery until the completion of the work. This shall include the erection of all required temporary shelters and supports to adequately protect any items stored in the open on the site from the weather, the ground and surrounding work; the cribbing of any items above the floor of the construction; and the covering of items in the incomplete building with tarpaulins or other protective covering; the installation of electric heaters in electrical switchgear and similar equipment to prevent moisture damage. Failure on the part of the Contractor to comply with the above will be sufficient cause for the rejection of the items in question.

B. The Contractor shall take particular care not to damage the building structure in performing work. All finished floors and finished surfaces shall be covered to prevent any damage by workers or their tools and equipment during the construction of the building.

1.15 SUPERVISION

A. Each Contractor and Subcontractor shall provide a competent superintendent or foreman for the work of their trade.

B. It shall be the responsibility of the General Contractor to assure that each superintendent studies all Drawings and is familiar with the work to be coordinated with and performed by other trades. The General Contractor shall coordinate the work of all trades and, before material is fabricated or installed, assure that the work will not cause an interference with another trade. Where interferences are encountered, they shall be resolved at the job site by the superintendents involved. Where interferences cannot be resolved without major changes to the Drawings, the matter shall be referred to the Engineer for a ruling. The decision of the Engineer shall be final.

1.16 SITE OBSERVATION

A. Site observation by the Architect, Engineer, Owner or any of their representatives, is for the express purpose of verifying compliance by the Contractor with the Contract Documents, and shall not be construed as construction supervision nor indication of approval of the manner or location in which the work is being performed as being a safe practice or place.

B. The safety of the workers on the site is the responsibility of the Contractor. By entering the site, the Contractor, Subcontractors, and their employees relieve the Owner of any responsibility for their safety, and accept complete responsibility for any unsafe acts or procedures which may cause them harm.

1.17 GUARANTEE

A. **The Contractor shall guarantee all labor and materials furnished and installed under this contract for a period of one (1) year from date of FINAL ACCEPTANCE by Owner.** Certain work and materials shall be guaranteed for a longer period when so specified. The guarantee shall cover the repair or replacement without additional cost to the Owner, of any defective material or faulty workmanship.

B. In addition to the above, the Contractor shall warrant all compressors to be free of defect, and shall provide a new compressor, of similar capacity and quality, at no cost to the Owner, if one should fail for any reason, within 5 (five) years of the date of final acceptance. This warranty shall be limited only to the material compressor, and shall not include labor or additional materials, such as Freon charge. Contractor shall provide installation labor and related materials at a reasonable cost.

C. If the Contractor fails to perform under these requirements, then the Uniform and Special General Conditions shall govern any required remedies the Owner may be forced to take.

1.18 CUTTING AND PATCHING

A. General: Provide openings in all new or existing construction indicated in the drawings, or as necessary for the proper installation of all systems included in the project.

B. Methods of cutting: Openings cut through concrete and masonry shall be made with masonry saws and/or core drills and at such locations acceptable to the Construction Inspector and Design Engineer. Impact-type equipment shall not be used except where specifically acceptable to the Design Architect and Engineer. Openings in precast concrete slabs for pipes, conduits, outlet boxes, etc., shall be core drilled to exact size.

C. Restoration: All openings shall be finished, closed around penetrating materials as specified, or restored to "as-new" condition under the appropriate Specification Section for the materials involved, and shall match remaining surrounding materials and/or finishes.

D. Masonry: Where openings are cut through masonry walls, provide and install lintels or other structural supports to protect the remaining masonry. Adequate supports shall be provided during the cutting operation to prevent any damage to the masonry occasioned by the operation. All structural members, supports, etc., shall be of the proper size and shape, and shall be installed in a manner acceptable to the Design Engineer.

E. Plaster: All mechanical work in areas containing plaster shall be completed prior to the application of the finish plaster coat. Cutting of finish plaster coat will not be permitted.

F. Special Note: No cutting, boring, or excavating which will weaken the structure shall be undertaken.

G. Refer to Division 2 specifications for requirements governing trenching.

1.19 ROOF PENETRATIONS AND FLASHING

A. Pipe, conduit and duct sleeves, pitch pockets, roof curbs, and flashings compatible with the roofing installation shall be provided and installed by a qualified Contractor for all roof penetrations. This shall be the responsibility of the General Contractor. All size and performance of each penetration, flashing and roof curb shall be coordinated with the piping, duct, and/or equipment requiring it. Refer to other specifications, drawings and/or schedules for specific requirements.

1.20 OPERATION PRIOR TO COMPLETION

A. When any piece of mechanical equipment is operable and it is to the advantage of the Contractor to operate the equipment for a purpose other than testing (for a period longer than one hour), the Contractor may do so, providing that the operation is properly supervised, and the Construction Inspector has given written permission. The warranty period shall not commence until such time as the equipment is operated for the beneficial use of the Owner, or date of substantial completion, whichever occurs first.

B. No equipment shall be operated, even for test purposes, until it has been thoroughly swept and vacuumed clean of dust, dirt, debris, and equipped with the proper filter.

C. Regardless of whether or not the equipment has or has not been operated, the Contractor shall properly clean the equipment, install clean filters, properly adjust, and complete all

deficiency list items before final acceptance by the Owner as described in the following paragraph. The date of acceptance and performance certification shall be the same date.

1.21 CHECKING AND TESTING MATERIALS AND/OR EQUIPMENT

A. Check inspections shall include, but not be limited to, heating, insulation, ventilating equipment, controls, miscellaneous mechanical equipment and such other items hereinafter specified or specifically designated by the Engineer of Record.

B. Commissioning of equipment and systems shall consist of, as a minimum:
   1. Verify that installation is as designed and specified in the construction drawings and specifications.
   2. Complete Manufacturer's recommended installation and startup checks and perform the following:
      a. Inspect for visible damage and correct all damage.
      b. Verify Manufacturer recommended and designed minimum clearances have been provided.
      c. Verify that all service access panels are accessible and hinged doors are fully operational as installed.
      d. Check that labels and schedules are clearly visible.
      e. Check for and remove all construction debris.
      f. Verify that controls are connected and operable.
      g. Check for and remove shipping bolts, blocks and tie-downs.
      h. Verify that the proper size filters have been provided and are installed properly.
      i. Adjust vibration isolators.
      j. Check and repair all damaged insulation and vapor barriers.
      k. Check all manual and automatic dampers for free operation through their full travel.
   3. Lubricate bearings on fan.
   4. Check that fan rotates in correct direction without vibration or binding.
   5. Start units according to Manufacturer's written instructions. Complete startup sheets and attach copy with Contractor's startup report and close out documents. Contractor may use Manufacturer's printed startup sheet or a copy of the one attached at the end of this section.
   6. Check and record performance of interlocks and protection devices; verify sequences of operation.
   7. Operate unit for an initial period as recommended or required by Manufacturer or these specifications, whichever is greater.
   8. Calibrate and check full function and operation of thermostats.
   9. Adjust and check high temperature limits.
   10. Check for the free operation of internal isolators, and adjust if necessary.
   11. Check controls for correct sequencing of heating, cooling, and normal and emergency shutdown.
   12. Record all additional temperatures, pressures, air flows, amperages, etc., required to verify unit's operation at or above specified or scheduled efficiency rating.
   13. After startup and performance testing, replace filters, vacuum all coils, lubricate bearings and adjust belts.

14. Demonstrate operation to TxDOT maintenance personnel as detailed in paragraph in Part 3 of this specification section.

1.22 CLEANING AND PAINTING

A. All equipment furnished by the mechanical Subcontractors shall be delivered to the job with a suitable factory protective finish. The following materials shall not be painted: copper, galvanized metal, stainless steel, fiberglass, and plastics such as PVC, PVDF, polypropylene, etc.

B. If painting is required, before painting, materials and equipment surfaces shall be thoroughly cleaned of cement, plaster, and other foreign materials, and all oil and grease shall be removed. Such surfaces shall be carefully wiped and all cracks and corners scraped out. Exposed metal work shall be carefully brushed down with steel brushes to remove rust and other spots and left smooth and clean.

C. Equipment nameplates shall be protected from being painted; suitable protection shall be afforded to the plates to prevent their being rendered illegible due to the painting operation, or receiving any overspray or spatter.

D. Scope of painting for Division 15 work in areas other than those defined as “exposed” is as follows:
1. All fuel piping (natural gas, LPG, etc.) installed under this project shall be painted whether concealed or exposed, in all areas of the project without exception. Fuel piping shall be painted “safety yellow” as defined by OSHA or furnished with Manufacturer applied “safety yellow” finish.
2. All uncovered, unprotected steel pipe, supports, exposed pipe and hanger rod threads shall be cleaned and painted with two coats of Tropical Paint Co. No. 77-black asphaltic emulsion. Galvanized steel and copper lines shall not be painted.
3. All canvas finishes including those in concealed spaces shall be painted with one sizing coat if not already sized, containing mildew resistant additive and Arabol adhesive prior to any other specified finish paint.
4. If insulated, steel piping shall be prime-painted prior to insulation.

E. The surfaces to be finish painted shall first be prepared as follows:
1. On canvas finishes pretreat as specified above. Insulated surfaces having vapor barrier jacket exposed to view shall first be painted with one (l) coat of sealer.
2. Galvanized and black steel surfaces shall first be painted with one (1) coat of P&L (Pratt & Lambert) galvanized metal primer. Primer may be eliminated on concealed fire and gas piping.
3. Painted aluminum surfaces shall first be painted with one (1) coat of P&L zinc chromate primer.
4. Cast iron pipe shall first be primed with a “nonbleed” primer.
5. The underside of all cast iron sinks not recessed in a cabinet are included as items to be painted in exposed areas.
6. All ferrous metal surfaces without a protective finish and not galvanized in exposed and concealed areas including chases, and above ceilings shall be

painted with two (2) coats of P&L zinc chromate primer as the construction progresses to protect against oxidation and deterioration.

PART 2 - PRODUCTS (Not Used)

PART 3 - EXECUTION

3.1 INSTALLATION METHODS

A. Support: All piping, ducts and conduits shall be adequately and properly supported from the building structure by means of hanger rods or clamps fastened to the building structure as herein specified. Sufficient support shall be provided and installed to restrain the movement of equipment, piping, ductwork and conduits from lateral movement during operation.

B. All pipe, conduits, etc., shall be cut accurately to measurements established from the actual building conditions and shall be worked into place without springing or forcing. All ducts, pipes and conduits run exposed in machinery and equipment rooms shall be installed parallel to the building lines, except that piping shall be sloped to obtain the proper pitch. Piping, ducts and conduits run in furred ceilings, etc., shall be similarly installed, unless noted otherwise. Conduits in furred ceilings and in other concealed spaces shall be neatly grouped and racked. All conduit and pipe openings shall be maintained in a sealed condition until the systems are closed with final connections.

C. All openings through all floors, walls, and roofs, etc., regardless of material, shall be sleeved for piping, ductwork, conduit, cable trays, etc. All penetrations shall be sleeved. Sleeves shall be set in new construction before concrete is poured, as cutting holes through any part of the concrete will not be permitted unless acceptable to the Architect/Engineer. See Section 15060 for sleeve specifications.

3.2 REQUIRED INSPECTIONS

A. Prior to the installation of any ceiling material, gypsum, plaster, or acoustical board, the Contractor shall notify the construction inspector so that arrangement can be made for an inspection of the above-ceiling area about to be “sealed” off. The Contractor shall give as much advance notice as possible, but no less than five (5) working days.

B. All above-ceiling areas will be subject to a formal inspection before ceilings are installed or installation is otherwise concealed from view. All mechanical and electrical work at and above the ceiling including items supported by the ceiling grid such as air inlets or outlets and lighting fixtures shall be complete and installed in accordance with contract requirements, including power to lighting fixtures, fans, and other powered items. Adequate lighting shall be provided to permit thorough inspection of all above-ceiling items. The purpose of this inspection is to verify the completeness and quality of the installation of the air conditioning systems, the electrical systems, the plumbing systems, and any other special above ceiling systems. The ceiling supports (tee bar or lath) shall

be in place so that access panel and light fixture locations are identifiable and so that clearances and access provisions may be evaluated.

C. No ceiling materials may be installed until the resulting deficiency list from this inspection is satisfied and the Construction Inspector has given approval.

3.3 TRAINING

A. When required in a Division 15 specification section, Contractor shall provide a minimum of six (6) hours of training for a minimum of four (4) of the Owner's personnel, on the operation and maintenance of the mechanical and plumbing systems, including filter replacement, the operation and programming of thermostats, and the location of access doors to hidden isolation valves, water hammer arrestors, etc. Contractor shall provide complete, written, Manufacturer's literature on all mechanical and plumbing systems for each person trained.

3.4 TESTING

A. Tests for specific systems and equipment are specified in associated specification sections or in the drawings. All tests specified or indicated shall be performed with the Owner present to witness such tests. All tests shall be individually documented, and the test report for each shall be included in the final documentation submitted to the Owner at the completion of the project. Data shall be delivered to the Design Engineer as specified under "Requirements for Final Acceptance". The documentation shall include as a minimum (see sample forms at the end of this section):
   1. Contractor firm name, supervisor's name, and name of personnel performing test
   2. Date and time of beginning of test, and date and time of test completion
   3. Description of equipment or system being tested
   4. Description of test being performed
   5. Description of outcome of test
   6. Dated signatures of person performing test, Contractor's supervisor, and Owner's representative, including legibly printed names and titles

B. The Construction Inspector shall be notified in writing at least 5 working days prior to each test and other Specification requirements requiring action on the part of the Construction Inspector. All equipment shall be placed in operation and tested for proper automatic control requirements before the balancing agency starts their work.

END OF SECTION

(Attachments follow)

ATTACHMENT TO SECTION 15050 - Sample test log forms (see Section 15050, Part 3, "TESTING."):

PROJECT: _____ **_____ District, _____ County** **Test Log**
Contractor firm name: Address: Phone Number:
Contractor Supervisor:
Description of System:
Description of Test:
Beginning of Test:(Date and Time)
Completion of Test:(Date and Time)
Outcome of test:
TEST IS APPROVED IF ALL SIGNATURES APPEAR BELOW **Contractor Supervisor:** Name and title _____ Signature _____ Date _____ **Testing Contractor:** Name and title _____ Signature _____ Date _____ **Owner:** Name and title _____ Signature _____ Date _____

PROJECT: _____
_____ District, _____ County
HVAC Equipment Startup Sheet

Equipment _____ Model #_____ Serial #_____

Technician _____ Date of startup_____

Additional accessories _____

Compressor voltage _____ amperage L1_____L2_____L3_____

Condenser Fan voltage _____ amperage L1_____L2_____L3_____

Evaporator Fan voltage _____ amperage L1_____L2_____L3_____

Heater voltage _____ amperage L1_____ L2_____ L3_____

Compressor Oil Pressure_____ Suction line Temperature_____ Pressure_____

Discharge Line Temperature _____Pressure_____

Hi-Lo Pressure cut-out_____

EAT_____ LAT_____

Crankcase heater amps_____

Freezestat setting_____

Fan Speed_____ CFM_____ Damper_____

Evaporator EAT(DB)_____EAT(WB)_____DAT(DB)_____DAT(WB)_____

Fan Speed_____CFM_____Damper_____

Superheat_____

Condensate drain operating _____ Secondary pan switch operating _____

Other/additional items:

Owner Representative:

Name and title _____

Signature _____ Date _____

SECTION 15060

SUPPORTS AND ANCHORS

PART 1 - GENERAL

1.1 SECTION INCLUDES

A. Pipe and equipment hangers and supports

B. Equipment bases and supports

C. Sleeves and seals

D. Flashing and sealing equipment and pipe stacks

1.2 RELATED SECTIONS

A. Section 15050 – Basic Mechanical Requirements

B. Section 15090 – Piping Insulation

C. Section 15097 – Ductwork Insulation

D. Section 15210 – Reciprocating Air Compressors

E. Section 15400 – Plumbing Piping and Associated Materials

F. Section 15540 – Fuel Fired Heaters

G. Section 15767 – Heat Pump Air Conditioning Systems

H. Section 15810 – Ductwork

I. Section 15820 – Ductwork Accessories

J. Section 15830 – Fans

K. Section 15850 – Air Outlets and Inlet

L. Section 15950 – Testing, Adjusting and Balancing

1.3 REFERENCES

A. ASME B31.2 – Fuel Gas Piping

B. ASME B31.9 – Building Services Piping

C. ASTM F708 – Design and Installation of Rigid Pipe Hangers

D. MSS SP58 – Pipe Hangers and Supports - Materials, Design and Manufacturer

E. MSS SP69 – Pipe Hangers and Supports - Selection and Application

F. MSS SP89 – Pipe Hangers and Supports - Fabrication and Installation Practices

G. NFPA 13 – Installation of Sprinkler Systems

H. SMACNA – HVAC Duct Construction Standards, latest edition

I. UL 203 – Pipe Hanger Equipment for Fire Protection Service

J. UPC – Uniform Plumbing Code, latest edition

K. UMC – Uniform Mechanical Code, latest edition

1.4 SUBMITTALS

A. Submit under provisions of Uniform General Conditions and Special Conditions, and Section 15050.

B. Product Data: Provide Manufacturers catalog data including load capacity.

C. Manufacturer's Installation Instructions: Indicate special procedures and assembly of components.

1.5 REGULATORY REQUIREMENTS

A. Conform to applicable code or standard for support of all systems.

PART 2 - PRODUCTS

2.1 PIPE HANGERS AND SUPPORTS

A. Manufacturers:
   1. Grinnell
   2. Approved equal

B. Supports, hangers, anchors and guides shall be provided for all horizontal and vertical piping.

C. All auxiliary steel required for pipe supports, anchors, guides, etc. shall be provided by the Mechanical Trades unless specifically indicated to be provided by others.

D. Contractor shall review all Drawings, including Structural Drawings, for details regarding pipe supports, anchors, hangers, and guides.

E. All pipe supports shall be of type and arrangement to prevent excessive deflection, to avoid excessive bending stresses between supports, and to eliminate transmission of vibration.

F. All rod sizes indicated in this Specification are minimum sizes only. This trade shall be responsible for structural integrity of all supports, anchors, guides, etc. All structural hanging materials shall have a minimum safety factor of 5 built in.

G. All floor supports of piping and equipment shall be structural steel, pipe, tubing, Unistrut, or similar materials. Threaded rod shall not be used to support piping or equipment from the floor.

H. Anchor points as indicated on Drawings or as required shall be located and constructed to permit the piping system to take up its expansion and contraction freely in opposite directions away from the anchored points.

I. Pipe supports, hangers, anchors, and guides shall be fastened to the structure only at such points where the structure is capable of restraining the forces in the piping system.

J. Hangers supporting and contacting brass or copper lines 3" in size and smaller shall be Grinnell Fig. CT-99c, adjustable, copper plated, tubing ring. Hangers supporting and contacting brass or copper lines 4" and larger shall be Grinnell Fig. 260, adjustable clevis, with a nut above and below the hanger, and approved neoprene isolating material between pipe (or tubing) and hanger on the support rod. For insulated copper or brass domestic water lines, hangers for all sizes of pipe shall be Grinnell Fig. 300, adjustable clevis, with a nut above and below the hanger, and approved neoprene isolating material between pipe (or tubing) and hanger on the support rod. Isolate all copper or brass lines from all ferrous materials with approved dielectric materials. Hangers supporting and contacting plastic piping shall be of equal design, but shall be padded with neoprene material or equal. The padding material and the configuration of its installation shall be submitted for approval.

K. Hangers supporting insulated lines where the outside diameter of the insulation is the equivalent of 8" diameter pipe or smaller in size and supporting all ferrous lines 6" and smaller in size shall be Grinnell Fig. 260, adjustable clevis, with a nut above and below the hanger on the support rod.

L. Hangers supporting and contacting ferrous lines larger than 6" in size and outside of insulation on lines with the outside diameter equivalent to 10" diameter pipe shall be Grinnell Fig. 260, adjustable clevis, with a nut above and below the hanger on the support rod.

M. Each hanger shall be properly sized to fit the supported pipe or fit the outside of the insulation on lines where specified. Hangers for dual or low temperature insulation pipes shall bear on the outside of the insulation, which shall be protected by support shields as specified in Section 15090 – PIPING INSULATION. Protect insulation from crushing by means of a section of rigid insulation to be installed at hanger points. Hangers for high temperature insulated pipes and all insulated hot and cold domestic water pipes shall

be encased in the insulation unless supported by trapezes in which case shield and rigid insulation shall be provided as specified above for low temperature insulated pipes.

N. Supports for vertical piping in concealed areas shall be double bolt riser clamps, Grinnell Fig. 261, or other approved equal, with each end having equal bearing on the building structure, and located at each floor. Two-hole rigid pipe clamps at 4 ft. on center or Kindorf channels and Grinnell Fig. 261 riser clamps may be used to support pipe from vertical surfaces or members where lines are not subject to expansion and contraction. Where brass or copper lines are supported on trapeze hangers or Kindorf channels the pipes shall be isolated from these supports with plastic tape with insulating qualities, or strut clamps as manufactured by Specialty Products Company, Stanton, California.

O. Pipe Supports in Chases and Partitions, or as detailed in the drawings: Horizontal and vertical piping chases and partitions shall be supported by hangers or other suitable support. Pipes serving plumbing fixtures and equipment shall be securely supported near the point where pipes penetrate the finish wall. Supports shall be steel plate, angles or special channels such as Unistrut mounted in vertical or horizontal position. Pipe clamps such as Unistrut P2426, P2008, P1109 or other approved clamps shall be attached to supports. Supports shall be attached to wall or floor construction with clip angles, brackets, or other approved method. Supports may be attached to cast iron pipe with pipe clamp, or other approved method. All copper or brass lines shall be isolated from ferrous metals with dielectric materials to prevent electrolytic corrosion.

P. Perforated strap iron (“plumbers tape”) or wire will not, under any circumstances, be acceptable as hanger material.

Q. Attachment:

1. The load and spacing on each hanger and/or insert shall not exceed the safe allowable load for any component of the support system, including the concrete which holds the attachments. Reinforcement at inserts shall be provided as required to develop the strength required.
2. Inserts for piping shall be of a type which will not interfere with reinforcing as shown on the structural Drawings and which will not displace excessive amounts of structural concrete.
3. All pipe supports shall be designed and installed to avoid interference with other piping, hangers, ducts, electrical conduit, supports, building structures, equipment, etc. All piping shall be installed with due regard to expansion and contraction and the type of hanger method of support, location of support, etc. shall be governed in part by this Specification.
4. Pipe hangers shall be attached to the structure as follows:
    a. Steel Beams: Where pipes and loads are supported under steel beams, approved type beam clamps shall be used.
    b. Steel Trusses: Where pipes and loads are supported from steel trusses, hanger rods shall be attached to bottom chord with brackets or angle clips.

R. Trapezes: Where multiple lines are run horizontally at the same elevation and grade, they may be supported on trapezes of Kindorf, Elcen, or approved equal, channel-suspended

on rods or pipes. Trapeze members including suspension rods shall each be properly sized for the number, size, and loaded weight of the lines they are to support.

S. Finishes: All hangers on piping including clevis hangers, rods, inserts, clamps, stanchions, and brackets, shall be dipped in Zinc Chromate Primer before installation. Rods shall be galvanized or cadmium plated after threading, in lieu of dipping zinc chromate. Universal concrete inserts shall be cadmium plated.

T. Provide any special foundations, hangers and supports indicated on the Drawings, specified elsewhere herein; or required by conditions at the site. Hangers and supporting structures for suspended equipment shall be provided as required to support the load from the building structure in a manner acceptable to the Engineer.

2.2 ACCESSORIES

A. Hanger Rods: Galvanized mild steel threaded both ends, galvanized threaded one end, or galvanized continuous threaded.

B. Sleeves: Provide sleeves for all piping and duct penetrations of walls and floor. Galvanized schedule 40 pipe for all pipe and conduit except uninsulated copper pipe. Use copper pipe as sleeves for uninsulated copper pipe.

2.3 INSERTS

A. Inserts: Malleable iron case of galvanized steel shell and expander plug for threaded connection with lateral adjustment, top slot for reinforcing rods, lugs for attaching to forms; size inserts to suit threaded hanger rods.

2.4 FLASHING

1. Metal Flashing: 26 gage galvanized steel.
2. Metal Counterflashing: 22 gage galvanized steel.
3. Roofing Flashing: See specifications for Roofing, elsewhere in these Specifications.
4. Caps: Steel, 22 gage minimum; 16 gage at fire resistant elements.

2.5 EQUIPMENT ROOF CURBS

A. Roof curbs shall be supplied and installed by the roof Manufacturer as specified in the architectural specifications. The sizes and types of roof curbs shall be coordinated with equipment requirements.

PART 3 - EXECUTION

3.1 INSTALLATION

A. Install all materials in accordance with Manufacturer’s instructions.

3.2 INSERTS

A. Provide inserts for placement in concrete formwork.

B. Where inserts are omitted, drill through concrete slab from below and provide through-bolt with recessed square steel plate and nut recessed into and grouted flush with slab.

3.3 PIPE HANGERS AND SUPPORTS

A. Support horizontal piping as scheduled.

B. Install hangers to provide minimum 1/2 inch space between finished covering and adjacent work.

C. Place hangers within 12 inches of each horizontal elbow.

D. Use hangers with 1-1/2 inch minimum vertical adjustment.

E. Support horizontal cast iron pipe adjacent to each hub, with 5 feet maximum spacing between hangers.

F. Support vertical piping at every floor. Support vertical piping at each floor at hub.

G. Where several pipes can be installed in parallel and at same elevation, provide multiple or trapeze hangers.

H. Support riser piping independently of connected horizontal piping.

I. Provide copper plated hangers and supports for copper piping.

J. Design hangers for pipe movement without disengagement of supported pipe.

K. Prime coat exposed steel hangers and supports. Hangers and supports located in crawl spaces, pipe shafts, and suspended ceiling spaces are not considered exposed, but shall be corrosion protected with galvanized plating.

L. Hanger Rods: (NOTE: All hanger rods shall be trimmed neatly so that no more than 1 inch of excess hanger rod protrudes beyond the hanger nut. In the event a rod is intentionally but temporarily left excessively long, for sloped or insulated lines for example, the contractor shall take appropriate measures to protect the pipe or other materials from damage.)

M. Provide and install sufficient support and lateral bracing to restrain all equipment and piping systems from lateral movement during operation of supported equipment and system(s).

3.4 FLASHING

A. Provide flexible flashing and metal counterflashing where piping and ductwork penetrate weather or weatherproofed walls, floors, and roofs.

B. Flash vent and soil pipes projecting 3 inches minimum above finished roof surface with lead worked one inch minimum into hub, 8 inches minimum clear on sides with 24 x 24 inches sheet size. For pipes through outside walls, turn flanges back into wall and caulk, metal counterflash, and seal.

C. Flash floor drains in floors with topping over finished areas with lead, minimum 10 inches clear on sides with minimum 48-inch diameter sheet size. Fasten flashing to floor drain clamp device.

D. Seal floor watertight to adjacent materials.

E. Adjust storm collars tight to pipe with bolts; caulk around top edge. Use storm collars above roof jacks. Screw vertical flange section to face of curb.

3.5 SLEEVES

A. Set sleeves in position in formwork. Provide reinforcing around sleeves.

B. Size sleeves large enough to allow for movement due to expansion and contraction. Provide for continuous insulation wrapping.

C. Extend sleeves through floor four inches above finished floor level. Caulk sleeves.

D. Sleeves through walls below grade shall be sized to accept a Link-Seal or similar type sealing system.

E. Where piping, ductwork or conduit penetrates floor, ceiling, or wall, close space between pipe or duct and adjacent work with fire stopping insulation and caulk air tight. Provide close fitting metal collar or escutcheon covers, as appropriate, at both sides of penetration.

F. Install chrome plated steel or stainless steel escutcheons at finished surfaces.

1.1 HANGER SPACING SCHEDULE

PIPE SIZE (inches)	MAX. HANGER SPACING (feet)	HANGER ROD (inches)
1/2 to 1-1/4	6.5	3/8
1-1/2 to 2	10	3/8
Plastic Pipe (All Sizes)	4	3/8
C.I. Bell and Spigot (or No-Hub)	5	5/8
NOTE: Also support all Cast Iron Bell and Spigot, and No-Hub piping at all joints and fittings. ("Plastic Pipe" refers to PVC, CPVC, PVDF, PP, PPDV, PE, etc.)		

END OF SECTION

SECTION 15090

PIPING INSULATION

PART 1 - GENERAL

1.1 SECTION INCLUDES

A. Piping insulation

B. Jackets and accessories

1.2 PRODUCTS FURNISHED BUT NOT INSTALLED UNDER THIS SECTION

A. Section 15400 – Plumbing Piping and Associated Materials: Placement of hangers and hanger inserts

1.3 RELATED SECTIONS

A. Section 15050 – Basic Mechanical Requirements

B. Section 15400 – Plumbing Piping and Associated Materials

1.4 REFERENCES

A. ASTM B209 – Aluminum and Aluminum-Alloy Sheet and Plate

B. ASTM C177 – Steady-State Heat Flux Measurements and Thermal Transmission Properties by Means of the Guarded-Hot-Plate Apparatus

C. ASTM C195 – Mineral Fiber Thermal Insulation Cement

D. ASTM C335 – Steady-State Heat Transfer Properties of Horizontal Pipe Insulation

E. ASTM C449 – Mineral Fiber Hydraulic-setting Thermal

F. ASTM C518 – Steady-State Heat Flux Measurements and Thermal Transmission Properties by Means of the Heat Flow Meter Apparatus

G. ASTM C533 – Calcium Silicate Block and Pipe Thermal Insulation

H. ASTM C534 – Preformed Flexible Elastomeric Cellular Thermal Insulation in Sheet and Tubular Form

I. ASTM C547 – Mineral Fiber Preformed Pipe Insulation

J. ASTM C585 – Inner and Outer Diameters of Rigid Thermal Insulation for Nominal Sizes of Pipe and Tubing (NPS System)

K. ASTM C591 – Rigid Preformed Cellular Urethane Thermal Insulation

L. ASTM C610 – Expanded Perlite Block and Pipe Thermal Insulation

M. ASTM C921 – Properties of Jacketing Materials for Thermal Insulation

N. ASTM D1056 – Flexible Cellular Materials – Sponge or Expanded Rubber

O. ASTM D1667 – Flexible Cellular Materials – Vinyl Chloride Polymers and Copolymers (Closed Cell Foam)

P. ASTM D2842 – Water Absorption of Rigid Cellular Plastics

Q. ASTM E84 – Surface Burning Characteristics of Building Materials

R. ASTM E96 – Water Vapor Transmission of Materials

S. NFPA 255 – Surface Burning Characteristics of Building Materials

T. UL 723 – Surface Burning Characteristics of Building Materials

1.5 SUBMITTALS

A. Submit under provisions of Uniform General Conditions and Special Conditions, and Section 15050.

B. Product Data: Provide product description, list of materials and thickness for each service, and locations.

C. Manufacturer's Installation Instructions: Indicate procedures which ensure acceptable workmanship and installation standards will be achieved.

1.6 QUALITY ASSURANCE

A. Materials: Flame spread / smoke developed rating of 25/50 or less in accordance with NFPA 255.

1.7 QUALIFICATIONS

A. Applicator: Company specializing in performing the work of this section with minimum three years experience.

1.8 DELIVERY, STORAGE, AND HANDLING

A. Deliver, store, protect, and handle products to site under provisions of Uniform General Conditions, Special Conditions and Section 15050.

B. Deliver materials to site in original factory packaging, labeled with Manufacturer's identification, including product density and thickness.

C. Store insulation in original wrapping and protect from weather and construction traffic.

D. Protect insulation against dirt, water, chemical, and mechanical damage.

1.9 ENVIRONMENTAL REQUIREMENTS

A. Maintain ambient temperatures and conditions required by Manufacturers of adhesives, mastics, and insulation cements.

B. Maintain temperature during and after installation for minimum period of 24 hours.

PART 2 - PRODUCTS

2.1 HOT AND COLD DOMESTIC WATER

A. All domestic (potable) hot and cold water lines in buildings, including valves, strainers, unions, flanges, etc., except where specifically noted to the contrary, shall be insulated.

B. Potable water piping shall be insulated with 3½ pound per cubic foot density preformed fiberglass insulation with a factory applied All Service Jacket, vapor sealing all joints, and factory performed fittings with vapor seal. Where pipe chases are tight, adequate provision shall be made at the rough in stage utilizing offset fittings or other means (except springing the pipe) to insure that insulation can be applied throughout the length of the pipe.

C. Valves shall be insulated with mitered pipe covering with voids filled with glass fiber blanket insulation. Valves and fittings shall be vapor sealed with a water base asphaltic emulsion. Fittings on concealed insulation shall be built up to the thickness of adjacent insulation with glass fiber fitting wrap and shall be finished with Glasfab tape embedded in vapor barrier emulsion. Exposed fitting insulation shall be built up to same thickness as adjoining pipe insulation with one coat cement and after drying shall be finished with a white vapor seal and canvas jacket secured with “Arabol” adhesive and be suitable for painting.

D. All insulated piping in outdoors locations shall be covered with smooth finished aluminum jacketing with ASJ and preformed fitting covers. Secure in place with 3/4” aluminum bands and seals, 3 per 3 foot section of jacketing. Jacketing to overlap 3”

E. Seams in jacket shall be placed in the least noticeable locations. Where seams, joint or fittings are rough they shall be covered with an application of insulating cement trowelled on smoothly before the canvas is applied with Arabol adhesive. The canvas must be free of wrinkles and have a smooth, neat appearance.

F. The hot and cold water piping and drain piping under all lavatories shall be insulated. Insulation shall be Truebro “Handi Lav-guard” insulation kit, Model #102W with accessory #105W for offset tailpiece, if applicable, conforming to ADA article 4.19.4, ANSI A117.1, BOCA article P-1203.4, and Texas Accessibility Standards. Insulation

shall be as specified or approved equal. All under sink piping shall be insulated without exception.

2.2 CONDENSATE DRAIN PIPING

A. Condensate drain piping from fan and coil units, coil banks, drinking fountain refrigeration units, drinking fountain drain piping, and other items of piping or equipment subject to condensation forming on the surface shall be insulated with 25/50 rated (flame spread/smoke developed), closed cell elastomeric thermal insulation. Elastomeric products shall be supplied in a preslit tubular form with a pressure sensitive adhesive system for closure and vapor sealing of the longitudinal joint. All elastomeric insulating products shall be guaranteed not to react with copper piping.

PART 3 - EXECUTION

3.1 EXAMINATION

A. Verify that piping has been tested before applying insulation materials.

B. Verify that surfaces are clean, foreign material removed, and dry.

3.2 INSTALLATION

A. Install materials in accordance with Manufacturer's instructions.

B. On exposed piping, locate jacket cover seams in least visible locations, but not higher than at the side of the pipe at the "90°" position, with the seam lapped such that the lap is directed down.

C. Insulated dual temperature pipes or cold pipes conveying fluids below ambient temperature:
1. Provide vapor barrier jackets, factory applied or field applied.
2. Insulate and seal vapor barrier at all fittings, joints, and valves with molded insulation of like material and thickness as adjacent pipe.
3. Finish with glass cloth and vapor barrier adhesive.
4. PVC fitting covers may be used at the contractor's option.
5. Continue insulation through walls, sleeves, pipe hangers, and other pipe penetrations.
6. Insulate entire system including fittings, valves, unions, flanges, strainers, flexible connections, pump bodies, and expansion joints.

D. For insulated pipes conveying fluids above ambient temperature:
1. Provide standard jackets, with or without vapor barrier, factory applied or field applied.
2. Insulate fittings, joints, and valves with insulation of like material and thickness as adjoining pipe.
3. Finish with glass cloth and adhesive.

4. PVC fitting covers may be used at the contractor's option.
5. For hot piping conveying fluids 140 degrees F or less, do not insulate flanges and unions at equipment, but bevel and seal ends of insulation.
6. For hot piping conveying fluids over 140 degrees F, insulate flanges and unions, including those at equipment, but label the insulation to indicate a concealed flange or union.

E. Inserts and Shields:
1. Application: Install shields between all hanger and piping insulation contact points. Install inserts on piping 2 inches diameter or larger.
2. Shields: Galvanized steel between pipe hangers or pipe hanger rolls and inserts.
3. Insert Location: Between support shield and piping and under the finish jacket.
4. Insert Configuration: Minimum 6 inches long, of same thickness and contour as adjoining insulation; may be factory fabricated.
5. Insert Material: Heavy density insulating material suitable for the planned temperature range, and the weight of the pipe.

F. Finish insulation at supports, protrusions, and interruptions.

G. All piping, equipment, ductwork, all plenums including metal and masonry construction, fans, etc., shall be insulated as indicated on the Drawings, as specified herein, and as required for a complete system. In each case, the insulation shall be equal to that specified and materials applied and finished as described in these Specifications.

H. All insulation shall be applied by mechanics skilled in this particular work and regularly engaged in such occupation. All insulation shall be applied in strict accordance with these Specifications and with factory printed recommendations on items not herein mentioned. Unsightly, inadequate, or sloppy work will not be acceptable, and all such work shall be removed and replaced as many times as necessary to achieve an acceptable installation.

I. All insulation, jacket, adhesives, mastics, sealers, etc., utilized in the fabrication of these systems shall meet NFPA 255 for fire resistant ratings (maximum of 25 flame spread and 50 smoke developed ratings) and shall be approved by the insulation Manufacturer for guaranteed performances when incorporated into their insulation system, unless a specific product is specified for a specific application, and is stated as an exception to this requirement. Certificates to this effect shall be submitted along with Contractor's submittal data for this section of the Specifications. No material may be used that, when tested by the ASTM E84-89 test method, is found to melt, drip or delaminate to such a degree that the continuity of the flame front is destroyed, thereby resulting in an artificially low flame spread rating, except where noted otherwise. A statement by the Manufacturer in the submittal literature that the material meets the requirements of NFPA 255 or UL 623 shall be deemed acceptable to meet the requirements of this specification.

J. All surfaces to be insulated shall be clean and dry before applying the insulation. All sections of molded pipe covering shall be firmly butted together. Where insulation terminates, it shall be neatly beveled and finished. No insulation shall be applied until the pipe, duct, etc., has been pressure tested and found tight. Piping, flexible

connections, flanges, valves, strainers, and unions shall be covered unless specifically noted otherwise. Flexible connections on duct, if used, shall not be covered. All materials used shall be fire retardant or nonflammable. Refer to Section 15050.

K. Where vapor barriers are required, the vapor barrier shall be on the outside. Extreme care shall be taken that the vapor barrier is unbroken. Joints, etc., shall be sealed. Where insulation with a vapor barrier terminates, it shall be sealed off with the vapor barrier being continuous to the surface being insulated. Ends shall not be left raw.

L. Where canvas finish is specified, use Arabol lagging adhesive to prevent mildew in securing canvas. Do not use wheat paste. In addition, cover all canvas insulation with a fire retardant coating.

M. The handling and installation of all insulation materials shall be performed in strict accordance with the Manufacturer's recommendations.

3.3 INSULATION SCHEDULE

Piping Type	Minimum Insulation Thickness
Hot and Cold Domestic Water	1"
Under Sink Domestic Water and Drain	(material as specified)
Condensate Drain Piping	½"

END OF SECTION

SECTION 15097

DUCTWORK INSULATION

PART 1 - GENERAL

1.1 SECTION INCLUDES

A. Ductwork insulation

B. Insulation jackets

1.2 RELATED SECTIONS

A. Section 15050 – General Mechanical Requirements

B. Section 15810 – Ductwork

C. Section 15820 – Ductwork Accessories

1.3 REFERENCES

A. TM B209 – Aluminum and Aluminum-Alloy Sheet and Plate

B. ASTM C518 – Steady-State Heat Flux Measurements and Thermal Transmission Properties by Means of the Heat Flow Meter Apparatus

C. ASTM C553 – Mineral Fiber Blanket and Felt Insulation

D. ASTM C612 – Mineral Fiber Block and Board Thermal Insulation

E. ASTM E84 – Surface Burning Characteristics of Building Materials

F. ASTM E96 – Water Vapor Transmission of Materials

G. NFPA 255 – Surface Burning Characteristics of Building Materials

H. SMACNA – HVAC Duct Construction Standards - Metal and Flexible

I. UL 723 – Surface Burning Characteristics of Building Materials

1.4 SUBMITTALS

A. Submit under provisions of the Uniform General Conditions and Special Conditions, and Section 15050.

B. Product Data: Provide product description, list of materials and thickness for each service, and locations.

C. Manufacturer's Installation Instructions: Indicate procedures which ensure acceptable workmanship and installation standards will be achieved.

1.5 QUALITY ASSURANCE

A. Materials: Flame spread/smoke developed rating of 25/50 in accordance with NFPA 255.

1.6 QUALIFICATIONS

A. Applicator: Company specializing in performing the work of this section with minimum three years experience.

1.7 DELIVERY, STORAGE, AND HANDLING

A. Deliver, store, protect and handle products to site under provisions of Uniform General Conditions, Special Conditions and Section 15050.

B. Deliver materials to site in original factory packaging, labeled with Manufacturer's density and thickness.

C. Store insulation in original wrapping and protect from weather and construction traffic.

D. Protect insulation against dirt, water, chemical, and mechanical damage.

1.8 ENVIRONMENTAL REQUIREMENTS

A. Maintain ambient temperatures and conditions required by Manufacturers of adhesives, mastics, and insulation cements.

B. Maintain temperature during and after installation for minimum period of 24 hours.

PART 2 - PRODUCTS

2.1 INSULATION

A. TYPE A – Rigid Board Insulation
   1. Three pound per cubic foot minimum density glass fiber semi-rigid board insulation with fiber perpendicular to the surface and with factory applied white foil reinforced vapor barrier jacket (ASJ). Insulation shall be equal to E.O. Woods Company "Rigid-Wrap".
   2. The insulation shall be secured to the ducts with mechanical fasteners; "Stick-clips", Graham Pins or Speed Clips, and shall be spaced approximately 12" on center on bottom of duct and where required elsewhere to hold insulation

securely against the duct as noted in the published recommendations of the Insulation Manufacturer.

3. After insulation is in place, all joints and seams shall be sealed with Foster 30-35 white vapor barrier emulsion applied over a 3" wide strip of Duramesh Glass Fabric. All protrusions through the vapor barrier shall be thoroughly sealed.
4. On ducts that are reinforced with standing seams or angle iron stiffeners 1" and over in height, the Contractor shall apply a strip of fiberglass board 1" thick by 6" wide, sealing same to the other insulation with mastic.
5. Vapor sealing of joints and seams is not required on hot duct application where concealed.

B. TYPE B – External Wrap Blanket Insulation

1. Blanket insulation with a thermal conductivity (K) of 0.27 or less similar in construction to Owens-Corning Fiberglass Series one and a half pound per cubic foot minimum density with foil reinforced Kraft (FRK) vapor barrier facing. Insulation shall be wrapped tightly on the ductwork with all circumferential joints butted and longitudinal joints overlapped a minimum of 2". Adhere insulation to metal with 4" strips of insulation bonding adhesive at 8" on center. On circumferential and longitudinal joints, the 2" flange of the facing shall be secured using 9/16" flare door staples applied 6" on center and taped with 4" wide fiberglass fabricated cloth tape embedded in Foster 30-35 white vapor barrier Emulsion and covered with Foster 30-35 white vapor barrier Emulsion until the tape is completely covered. All pin penetrations or punctures in facing shall also be taped. If the project is an existing building retrofit project contractor shall seal insulation joints with foil backed tape with woven string stapled in at least two places per side, in lieu of fiberglass fabricated cloth with mastic.

C. Top of ceiling diffusers shall be insulated with 1" Insulation B, exempt if diffuser has factory installed insulation.

D. Flexible round ducts are specified in Section 15810 as factory insulated.

PART 3 - EXECUTION

3.1 DUCT DIMENSIONS INDICATED IN THE DRAWINGS ARE NET INSIDE DIMENSIONS REQUIRED FOR AIR FLOW. DUCT CONSTRUCTION SHALL INCREASE DUCT SIZE TO ALLOW FOR INSULATION THICKNESS IF NECESSARY TO MAINTAIN INDICATED FREE AREA.

3.2 EXAMINATION

A. Ductwork shall be tested as specified before applying insulation materials.

B. Verify that ductwork has been tested before applying insulation materials.

C. Verify that surfaces are clean, foreign material removed, and dry.

3.3 INSTALLATION

A. Install materials in accordance with Manufacturer's instructions.

B. Insulated ductwork conveying air below ambient temperature:
1. Provide insulation with vapor barrier jackets.
2. Finish all joints and edges of insulating material with tape and vapor barrier jacket, sealed vapor tight.
3. Continue insulation through walls, sleeves, hangers, and other duct penetrations.
4. Insulate entire system including fittings, joints, flanges, the backs of diffusers, flexible connections, and expansion joints.

C. Insulated ductwork conveying air above ambient temperature:
1. Provide with or without standard vapor barrier jacket.
2. Insulate fittings and joints. Where service access is required, bevel and seal ends of insulation.

D. External Duct Insulation Application:
1. Secure rigid (not blanket) insulation with vapor barrier with wires and seal jacket joints with vapor barrier adhesive or tape to match jacket.
2. Secure insulation without vapor barrier with staples, tape, or wires.
3. Install without sag on underside of ductwork. Use adhesive or mechanical fasteners where necessary to prevent sagging. Lift ductwork off trapeze hangers and insert spacers.
4. Seal vapor barrier penetrations by mechanical fasteners with vapor barrier adhesive.
5. Stop and point insulation around access doors and damper operators to allow operation without disturbing wrapping.

E. Duct and Plenum Liner Application:
1. Adhere insulation with adhesive for 100 percent coverage.
2. Secure insulation with mechanical liner fasteners. Refer to SMACNA Standards for spacing.
3. Seal and smooth joints.
4. Seal liner surface penetrations with adhesive.

F. All piping, equipment, ductwork, all plenums including metal and masonry construction, fans, etc., shall be insulated as indicated on the Drawings, as specified herein, and as required for a complete system. In each case, the insulation shall be equal to that specified and materials applied and finished as described in these Specifications.

G. All insulation shall be applied by mechanics skilled in this particular work and regularly engaged in such occupation. All insulation shall be applied in strict accordance with these Specifications and with factory printed recommendations on items not herein mentioned. Unsightly, inadequate, or sloppy work will not be acceptable, and all such work shall be removed and replaced to achieve an acceptable installation.

H. All insulation, jacket, adhesives, mastics, sealers, etc., utilized in the fabrication of these systems shall meet NFPA for fire resistant ratings (maximum of 25 flame spread and 50 smoke developed ratings) and shall be approved by the insulation Manufacturer for guaranteed performances when incorporated into their insulation system, unless a specific product is specified for a specific application, and is stated as an exception to this requirement. Certificates to this effect shall be submitted along with Contractor's submittal data for this section of the Specifications.

I. All surfaces to be insulated shall be clean and dry before applying the insulation. All sections of molded pipe covering shall be firmly butted together. Where an insulation covering is applied, it shall lap the adjoining section of insulation by at least three inches (3"). Where insulation terminates, it shall be neatly beveled and finished. No insulation shall be applied until the pipe, duct, etc., have been pressure tested and found tight. Piping, flexible connections, flanges, valves, strainers, and unions shall be covered unless specifically noted otherwise. Flexible connections on duct shall not be covered.

J. Where vapor barriers are required, the vapor barrier shall be on the outside. Extreme care shall be taken that the vapor barrier is unbroken. Joints, etc., shall all be sealed. Where insulation with a vapor barrier terminates, it shall be sealed off with the vapor barrier being continuous to the surface being insulated. Ends shall not be left raw.

K. Extreme care shall be taken in covering ductwork to insure the duct is not pierced with sheet metal screws or other fasteners.

L. Where canvas finish is specified, use Arabol lagging adhesive to prevent mildew in securing canvas. Do not use wheat paste. In addition, cover all canvas insulation with a fire retardant coating.

M. The handling and installation of all insulation materials shall be performed in strict accordance with the Manufacturer’s recommendations.

3.4 TOLERANCE

A. Substituted insulation materials shall provide thermal resistance at least the amount specified, or within 10 percent at normal conditions, as materials indicated.

3.5 DUCT INSULATION SCHEDULE

A. Insulation type, location and thickness shall be as indicated on the drawings.

END OF SECTION

SECTION 15210

RECIPROCATING AIR COMPRESSORS

PART 1 - GENERAL

1.1 WORK INCLUDES

A. Reciprocating air compressor

B. Air receiver and accessories

C. Pressure Reducing Valves

D. Water Air separators

1.2 RELATED WORK

A. Section 15050 – Basic Mechanical Requirements

B. Section 15060 – Anchors and Supports

C. Section 15400 – Plumbing Piping and Associated Materials

1.3 REFERENCES

A. Air receivers shall meet requirements of ASME Code for Unfired Pressure Vessels and carry ASME approval stamp.

1.4 SUBMITTALS

A. Submit Manufacturer’s drawing and data sheets for each component.

B. Submit inspector's certificate for air receiver for inclusion in Operating and Maintenance Manuals.

PART 2 - PRODUCTS

2.1 ACCEPTABLE MANUFACTURERS

A. Ingersoll-Rand

B. SpeedAire

C. Substitutions: Under provisions of Uniform General Conditions and Special Conditions, and Section 15050

2.2 TYPE

A. Provide a total packaged configuration which shall include a starter, automatic drain valve, low oil level switch, an air cooled compressor mounted on a vertical receiver tank, and all the necessary controls. Refer to equipment schedule on drawings for additional requirements.

2.3 COMPRESSOR CONSTRUCTION

A. Construct compressor unit with cast iron housing and head, heat treated forged steel or ductile iron shaft, aluminum alloy connecting rods, aluminum pistons with non-lubricated carbon rings, high-strength alloy suction and discharge valves. Statically and dynamically balance rotating parts.

B. Mount motor and compressor on one piece ribbed cast iron or welded steel base with provision for V-belt adjustment.

2.4 AIR RECEIVER

A. Provide vertical receiver tank built to ASME regulations for working pressure of 175 psi. Flange or screw inlet and outlet connections.

B. Fittings shall include adjustable pressure regulator, safety valve, pressure gage, drain cock, and automatic condensate trap.

C. Tank Finish: Hot-dipped galvanized, baked enamel, or powder coat.

2.5 PRESSURE REDUCING VALVE

A. Provide pressure reducing station(s) complete with automatic reducing valve and bypass, and low pressure side relief valve and gage.

B. Valve capacity suitable to reduce pressure from 200 psi to 30 psi to be adjustable upwards from reduced pressure.

2.6 CONTROLS

A. Pressure switch to cut out at 100 psi with minimum differential of 20 psi.

B. Dual Compressor regulation shall be through lead-lag switch with time delay relay.

PART 3 - EXECUTION

3.1 INSTALLATION (Non-portable units)

A. Install compressor unit on concrete foundation with sole plates and isolators. Level and bolt in place.

B. Make air cock and drain connection on horizontal casing.

C. Install line size gate valve and anti-return valve on compressor discharge.

D. Install replaceable cartridge type filter silencer of adequate capacity for each compressor.

E. Place shut-off valve on water inlet to aftercooler. Pipe drain to floor drain.

F. Connect condensate drains to nearest floor drain.

G. Install valved drip connections at low points of piping system.

H. Install take-offs to outlets from top of main, with shut-off valve after take-off.

I. Install compressed air couplings, 3/8 inch female speed couplers, and pressure gages where outlets are indicated.

J. Install "T" pieces instead of elbows at changes in direction of piping. Fit open end of each "T" with plug.

3.2 INSTALLATION (Portable units)

A. Install compressed air couplings, 3/8 inch female speed couplers, and pressure gages where outlets are indicated.

B. Install "T" pieces instead of elbows at changes in direction of piping. Fit open end of each "T" with plug.

3.3 PERFORMANCE

A. Compressors shall operate at scheduled air volume and pressure without oil creep, overloading, and within 10 percent of peak efficiency. Refer to drawings for equipment schedule.

END OF SECTION

SECTION 15400

PLUMBING, PIPING AND ASSOCIATED MATERIALS

PART 1 - GENERAL

1.1 SECTION INCLUDES

A. Pipe and pipe fittings

B. Valves

C. Valve Boxes

D. Unions

E. Dissimilar Metal Connections

F. Sanitary waste and vent system

G. Domestic water supply and distribution system

H. Water hammer arrestors

I. Water closets

J. Urinals

K. Lavatories

L. Sinks

M. Faucets

N. Hose bibbs

O. Electric Water Coolers

P. Electric water heater

Q. Liquid propane and natural gas supply and distribution system

R. Compressed air system

1.2 RELATED SECTIONS

A. Section 15050 – Basic Mechanical Requirements

B. Section 15060 – Supports and Anchors

C. Section 15090 – Piping Insulation

D. Section 15210 – Reciprocating Air Compressors

E. Division 16 – Electrical

1.3 REFERENCES

A. AGA – American Gas Association

B. ANSI B31.2 – Fuel Gas Piping

C. ANSI B31.4 – Liquid Petroleum Transportation Piping Systems

D. ANSI/ASHRAE 90.1 – Energy Conservation in New Building Design

E. ANSI/NFPA 70 – National Electrical Code

F. ANSI/UL 174 – Household Electric Storage Tank Water Heaters

G. ANSI/NEMA 250 – Enclosure for Electrical Equipment (1000 Volts Maximum)

H. ANSI/ASSE 1011 – Hose Connection Vacuum Breakers

I. ANSI/ASME A112.19.1 – Enameled Cast Iron Plumbing Fixtures

J. ANSI/ASME A112.19.2 – Vitreous China Plumbing Fixtures

K. ANSI/ASME A112.19.5 – Trim for Water-Closet Bowls, Tanks, and Urinals (Dimensional Standards)

L. ANSI A112.26.1 – Water Hammer Arrestors

M. ANSI B31.9 – Building Service Piping

N. ASME A112.18.1 – Finished and Rough Brass Plumbing Fixture Fittings

O. ASME B16.18 – Cast Bronze Solder-Joint Pressure fittings

P. ASME B16.22 – Wrought Copper and Bronze Solder-Joint Pressure Fittings

Q. ASME B16.26 – Cast Bronze Fittings for Flared Copper Tubes

R. ASME B16.3 – Malleable Iron Threaded Fittings

S. ASTM A47 – Ferritic Malleable Iron Castings

T. ASTM A53 – Pipe, Steel, Black and Hot-Dipped Zinc Coated, Welded and Seamless

U. ASTM A74 – No-hub Cast Iron Soil Pipe and Fittings

V. ASTM A888 – Bell and Spigot Service Weight Cast Iron Soil Pipe and Fittings

W. ASTM B32 – Solder Metal

X. ASTM B42 – Seamless Copper Pipe

Y. ASTM B43 – Seamless Red Brass Pipe

Z. ASTM B75 – Seamless Copper Tube

AA. ASTM B88 – Seamless Copper Water Tube

BB. ASTM B251 – Wrought Seamless Copper and Copper-Alloy Tube

CC. ASTM B302 – Threadless Copper Pipe (TP)

DD. ASTM C564 – Rubber Gaskets for Cast Iron Soil Pipe and Fittings

EE. ASTM D1784 – "Standard Specification for Rigid Poly (Vinyl Chloride) (PVC) Compounds and Chlorinated Poly (Vinyl Chloride) (CPVC) Compounds"

FF. ASTM D1785 – Poly (Vinyl Chloride) (PVC) Plastic Pipe, Schedules 40, 80, and 120

GG. ASTM D2466 – Poly (Vinyl Chloride) (PVC) Plastic Pipe Fittings, Schedule 40

HH. ASTM D2564 – Solvent Cements for Poly (Vinyl Chloride) (PVC) Plastic Pipe and Fittings

II. ASTM D2729 – Poly (Vinyl Chloride) (PVC) Sewer Pipe and Fittings

JJ. ASTM D2855 – Making Solvent-Cemented Joints with Poly (Vinyl Chloride) (PVC) Pipe and Fittings

KK. AWWA C651 – Disinfecting Water Mains

LL. CISPI 301 – Cast Iron Soil Pipe and Fittings for Hubless Cast Iron Sanitary Systems

MM. CISPI 310 – Joints for Hubless Cast Iron Sanitary Systems

NN. NFPA 54 – National Fuel Gas Code

OO. NFPA 58 – Liquefied Petroleum Gas Code

PP. NSF – National Sanitation Foundation

QQ. PDI WH-201 – Water Hammer Arrestors

RR. TCEQ – Texas Commission for Environmental Quality, Water System Regulations

SS. UPC – Uniform Plumbing Code, latest edition

1.4 SUBMITTALS

A. Submit under provisions of Uniform General Condition and Special Conditions, and Section 15050.

B. Product Data: Provide data on pipe materials, pipe fittings, valves, and accessories. Provide Manufacturers catalog information. Indicate valve data and ratings.

1.5 QUALITY ASSURANCE

A. Valves: Manufacturer's name and pressure rating marked on valve body.

B. Piping: Manufacturer's name and piping designations clearly stamped on all piping. Markings shall also include applicable ASTM Standard and NSF Certification.

C. Manufacturer's Installation Instructions: Indicate assembly and support requirements.

D. Perform Work in accordance with State of Texas Department of Health and Texas Commission on Environmental Quality Standards.

E. Ensure products and installation of specified products are in conformance with recommendations and requirements of the following organizations:
1. National Sanitation Foundation (NSF)
2. National Electrical Manufacturers' Association (NEMA)
3. Underwriters Laboratories (UL)

1.6 QUALIFICATIONS

A. Manufacturer: Company specializing in manufacturing the Products specified in this section with minimum three years documented experience.

B. Installer: Company specializing in performing the work of this section with minimum of three years documented experience. All work on all plumbing systems shall be performed by, or under the direct, full-time supervision of a fully qualified and licensed Master Plumber holding a current license issued by the State of Texas.

1.7 REGULATORY REQUIREMENTS

A. Perform Work in accordance with the latest editions of the Uniform Plumbing Code, and TCEQ and TDH Regulations.

B. Conform to applicable code for installation of backflow prevention devices.

C. Conform to NSF, ANSI/NFPA 54, ANSI/NFPA 58, ANSI/NFPA 70, ANSI/UL 174, and ANSI/UL 1453, as appropriate, requirements for water heaters.

1.8 DELIVERY, STORAGE, AND HANDLING

A. Deliver, store, protect and handle products to site under provisions of Section 15050.

B. Accept valves on site in shipping containers with labeling in place. Inspect for damage.

C. Provide temporary end caps and closures on valves, piping and fittings. Maintain in place until installation.

D. Protect piping systems from entry of foreign materials by completing sections of the work, temporary covers, and isolating parts of completed system.

1.1 ENVIRONMENTAL REQUIREMENTS

E. Do not install or backfill buried piping when bedding is wet or frozen.

PART 2 - PRODUCTS

2.1 MANUFACTURERS, GENERAL

A. Each type of product shall be manufactured by the same company. In other words, all lavatories, water closets and urinals shall be the products of the same Manufacturer, and all faucets and hose bibbs (except for freezeproof hose bibbs) shall be the products of the same Manufacturer.

2.2 WALL, FLOOR AND CEILING PLATES

A. Except as otherwise noted, provide C.P. (chrome plated) brass wall plates (escutcheons) around all pipes, conduits, etc., passing exposed through walls, floors, or ceilings, in all spaces except underfloor and attic spaces. Plates shall be sized to fit snugly against the outside of the pipe or against the insulation on lines which are insulated and positively secured to such pipe or insulation. All equipment closets are classified as finished areas. Round and rectangular ducts shall have closure plates (NOT chrome plated) made to fit accurately at all penetrations of walls and ceilings.

2.3 DOMESTIC WATER SUPPLY AND DISTRIBUTION SYSTEMS

A. All piping of potable domestic water from the water isolation valve up to and including all piping within the confines of building walls shall be a part of the domestic water piping system. Domestic water piping material and installation shall be as previously described and as specified in the following paragraphs.

B. Unless otherwise shown on the Drawings, all above grade (and slab) domestic water piping shall be fabricated of Type K, hard drawn, copper pipe made of deoxidized copper (99.9% pure). Type K copper pipe shall conform in every detail to ASTM Standard Specifications for COPPER WATER TUBE, Serial Designation B-88, and it shall be provided in 10 or 20 foot straight lengths.

C. Unless otherwise shown on the Drawings, all below slab domestic water piping shall be fabricated of one continuous length (without joints) of Type K, soft drawn, copper pipe made of deoxidized copper (99.9% pure). Type K copper pipe shall conform in every detail to ASTM Standard Specifications for COPPER WATER TUBE, Serial Designation B-88. Note that if a branch must be made, then it shall be made above the slab. All tubing bends shall be made using a tubing bender designed to bend the size of pipe being bent.

D. Copper pipe may only be joined using non-lead-bearing solder, such as Dunton's 95-5 solder (95 percent tin, and 5 percent antimony) manufactured by W. M. Dunton Company, or approved equal. Silver solder consisting of 95 percent tin and 5 percent silver is the only acceptable material substitution.

E. All fittings for four inch (4") and smaller water lines shall be Streamline Solder Fittings manufactured by Streamline Pipe and Fittings Division, Mueller Brass Company, or approved equal. These wrought copper fittings shall be rigid and strong with openings machined to an accurate capillary fit for the copper pipe.

F. The hot and/or cold water supply lines to each and every fixture hereinafter specified shall be equipped with stop valves which shall be chromium plated, cartridge type.

G. All exposed piping and tubing (exceeding 1/4 inch) inside the building shall be chrome plated.

H. Care shall be exercised in fabricating plumbing lines to avoid all cross connections and to construct the piping systems in a manner which eliminates the possibility of water contamination. The piping systems have been designed in every case to avoid the possibility of reverse flow or back siphoning. Care shall be exercised in constructing plumbing lines to make certain that not only the letter, but the spirit, of these safety precautions is carried out to the fullest possible extent.

2.4 VALVES

A. No solder connected or grooved fitting valves shall be used on this project.

B. Ball valves shall be constructed with a three piece bronze body, stainless steel ball and stem, Teflon seats, packing and gasket, bronze gland follower, adjustable stuffing box, steel lever type handle, with plastic operating handle, quarter turn stops, and shall be class 150. Stem extensions shall be furnished for use in insulated lines.

C. Gate valves shall be constructed with a cast iron body, bonnet, wedge gate and handwheel, with a brass alloy stem, cast bronze seat rings, brass packing gland, and non-asbestos packing. All gate valves shall be Class 125, flanged bolted bonnet, and have a solid wedge gate.

D. Standard of Quality for Valves:

Valve Type	Valve Size		Manufacturer		
			Milwaukee	Nibco	Apollo
Ball Valve for shutoff and isolation	*4" and smaller	Domestic Hot & Cold Water Systems	BA-300S (up to 2")	T-595-Y-66	82-140-57
Gate Valve for shutoff and isolation	2" to 4" (threaded)	Water supply and distribution	------	T-617-O	------
Gate Valve for shutoff and isolation	2" to 8" (flanged)	Water supply and distribution	2885-FP	F-617-O	------
*Requires extended stem in insulated lines, and in situations noted in the drawings.					

2.5 VALVE BOXES

A. For each underground valve installed by the Contractor, where indicated in the construction plans, the Contractor shall provide and install a valve box in the location(s) shown in the plans. These valve boxes shall be designed to withstand heavy vehicular traffic and shall have a locking cast iron cover. The word "**WATER**" shall appear on each cover. Valve boxes shall be supported independently from the piping and shall not touch the piping. The boxes shall be installed so that their tops are just flush with or slightly above finished grade or paving.

2.6 UNIONS

A. Provide and install unions at appropriate points to permit removal of pipe and equipment without injury to other parts of the system. No unions will be required in welded lines or lines assembled with solder joint fittings except at equipment items, machinery items and other special pieces of apparatus. Unions in copper lines shall be Class 125 ground joint brass unions or Class 150 brass flanges if required by the mating item of equipment. Companion flanges on lines at various items of equipment, machines and pieces of apparatus shall serve as unions to permit removal of the particular items.

2.7 DISSIMILAR METAL CONNECTIONS

A. In all domestic water lines where the material of the pipe is changed from ferrous to copper or brass, a dielectric coupling shall be used at the transition. Unions connecting ferrous pipe to copper or brass pipe shall be dielectric type equal to Epco and shall meet the following requirements. All changes in piping material from ferrous to any other metal shall be installed with a dielectric union or fitting.

B. Insulated unions shall have an impervious insulation barrier capable of limiting galvanic current to one percent of the short circuit current in a corresponding bimetallic joint. When dry, the insulation barrier shall be able to withstand a 600 volt breakdown test.

2.8 SANITARY WASTE AND VENT SYSTEM

A. The sanitary waste system shall be installed as indicated on the Drawings complete with all fixtures, drains, traps and required connections. All fixtures and drains shall be properly vented and trapped. The Contractor shall complete the installation of the sanitary drainage system by making approved connections as indicated on the Drawings.

B. All sanitary waste and vent piping, unless specifically shown to the contrary, shall be service weight cast iron soil pipe conforming to ASTM Specifications A-888, hubless ("No-Hub") for eight inch (8") and smaller, each piece of pipe and each fitting shall have the Manufacturer's mark or name cast into it, from 5 feet outside the building footprint up to and including all waste and vent piping inside the building(s).

C. Clamps for no-hub piping shall conform to CISPI standard 310, and shall be 100 percent stainless steel, including the clamp body band, clamp straps, screw tighteners, and the bodies of the screw clamps. The sealing gasket shall be neoprene or EPDM rubber. All hubless clamps used in the project shall be stamped with the CISPI Approval, and shall be heavy duty with 4 bands on sizes up to 4" and 6 bands on sizes from 5" to 8". Clamps shall be "Widebody" clamps as manufactured by Tyler Pipe or approved equal.

D. At the option of the contractor, bell and spigot piping may be used for sanitary waste. The material used shall be Tyler Pipe, "Tyseal" or approved equal, conforming to ASTM standard A-74, and shall be stamped with the NSF and UL stamps. Sealing of the joints shall use neoprene gastketing materials and an adhesive lubricant such as manufactured by Black Swan, applied as recommended by the Manufacturer.

2.9 WATER HAMMER ARRESTORS

A. Acceptable Manufacturers:
   1. Wade
   2. Zurn
   3. Approved equal

B. Water hammer arrestors shall be installed as shown on the plumbing plans, extending connecting piping to above accessible ceilings or behind access panels, and shall be sized in accordance with Plumbing and Drainage Institute Standard PDI-WH201. If the latter is proposed, the Contractor shall submit a shop drawing of the complete plumbing plan, including all fixtures, and indicate the locations of all water hammer arrestors.

C. Water hammer arrestors shall be Wade Shokstops of all stainless steel construction with welded nested bellows, or approved equal.

2.10 FIXTURES, GENERAL

A. The Contractor shall provide vitreous china (unless noted otherwise) plumbing fixtures as scheduled and where indicated on the Drawings. The fixtures shall be free from mars or chips and shall be new, first quality and shall be furnished with sufficient supports in order to adequately hang each and every unit. The space between fixtures and masonry

walls shall be grouted with white silicone grout. The space between fixtures and gypboard or wood panel walls shall fit flat against the wall surface with no more than 1/16" gap.

B. Flush valves shall be as scheduled, and shall be the products of Sloan (Royal model), Zurn (Aquaflush model), or approved equal.

2.11 FITTINGS AND PIPES FOR FIXTURES

A. All faucets, fittings, supply stops and similar devices shall be of one Manufacturer unless otherwise specified. All water faucets and valve bodies shall be cast brass with a minimum copper content of 85%. They shall contain standardized interchangeable operating units (cartridges) constructed of a removable and replaceable unit containing all parts subject to wear. All water faucets shall contain an adjustable internal volume control unit. All exposed parts shall be chromium plated, unless noted otherwise.

B. All faucets, supplies, stops, and hose bibbs used in this project shall all be products of the same Manufacturer. All faucets, unless noted otherwise, shall be manufactured of solid cast brass, and have removable and repairable cartridges. All faucets shall be manufactured by Chicago Faucets or approved equal.

C. Fittings and piping shall be brass and, wherever exposed, shall be polished chrome-plated, unless noted otherwise.

D. Furnish and install all required water, waste, soil and vent connections to all plumbing fixtures, together with all fittings, supports, fastening devices, cocks, valves, traps, etc., leaving all in complete working order.

E. Supplies for all lavatories, sinks, and drinking fountains shall be loose key angle stops with 1/2" NPT female inlets and shall include wall flanges, and braided stainless steel riser hoses. All stops and riser hoses shall be installed under the sink or lavatory, and shall be accessible for use. All components shall be chrome plated, unless noted otherwise. In all cases, all piping, tubing, fittings, and faucets shall be installed using a mechanical connection, such as bull-nose, flared, flanged, or threaded fittings. Fittings requiring a friction fit using slip-on or gasketed connections are not acceptable.

2.12 LAVATORIES

A. Lavatories shall be as scheduled in the plumbing drawings.

2.13 WATER CLOSETS

A. Water closets, carriers, flush valves and seats shall be as scheduled in the plumbing drawings.

2.14 URINALS

A. Urinals, carriers and flush valves shall be as scheduled in the plumbing drawings.

2.15 HOSE BIBBS

A. Hose bibbs shall be as scheduled in the plumbing drawings. (NOTE that freezeproof hosebibbs may be of a different Manufacturer than that of the other faucets and hosebibbs.)

2.16 ELECTRIC WATER COOLER

A. Electric water cooler(s) shall be as scheduled in the plumbing drawings.

2.17 ELECTRIC WATER HEATER

A. Water heater shall be as scheduled in the drawings.

B. Heating elements of low watt density Incoloy sheathed, immersion type, designed to be individually field replaceable.

C. Water temperature control adjustable from 90°F to 160°F.

D. Water heaters shall be supplied and installed with a temperature and pressure relief (T&P) valve. A hard drawn, rigid Type K copper drain line from the T&P valve shall be installed, and shall be terminated in the location shown in the drawings, a minimum of 2" above the lowest overflow point of a sink, mop sink, or floor drain. The termination of the drain shall be installed using a 90° ell fitting, installed in the "down" position directly over the receptacle.

E. All piping connections to the water heater (except for the T&P drain line) shall include a dielectric union and an isolation valve. The cold and hot water piping above the dielectric unions shall be electrically bonded with a minimum AWG #8 solid copper wire, insulated with green insulation.

F. All water heaters shall be installed in a drain pan manufactured for that purpose, installed with a hard drawn, rigid Type K copper drain line, piped to the same location as the T&P drain line, and in the same manner described for the T&P drain line.

2.18 LIQUID PROPANE and/or NATURAL GAS DISTRIBUTION SYSTEM

A. The fuel gas system(s) shall be installed using the materials and methods as specified herein and in the following paragraphs.

B. Gas Cutoffs: Shall be as required by the Gas Company and the Uniform Plumbing Code. Where requirements differ, the higher quality or greater quantity shall govern.
   1. Main service entrance to building valve shall be a threaded iron body, lubricated plug valve as manufactured by Nordstrom, Figure 142, 200psi CWP, or approved equal.
   2. Gas cutoff valves shall be provided for each gas burning appliance. This valve shall be a lever operated, threaded brass, valve as manufactured by Conbraco Valve Company, Series 50, or approved equal.

C. Fuel Gas Piping:

1. All pipe used for the fabrication of fuel gas piping systems shall be Schedule 40 black steel pipe which conforms in every detail to Standard Specifications for WELDED AND SEAMLESS STEEL PIPE, ASTM Designation A53, Type E or S.
2. Unless otherwise specifically required, all steel pipe provided for fuel gas piping systems shall be provided with plain ends and assembled with weld fittings on all pipe 2-1/2" and larger. All piping 2" and smaller shall be threaded. No pipe smaller than 3/4" shall be used. From the emergency shutoff valve to the outlets the pipe shall be assembled with threaded fittings provided all joints are exposed or within the confines of the laboratory furniture.
3. Note that galvanized, brass, and copper piping and fittings are PROHIBITED for use in fuel gas service for this project.

D. Fittings: All threaded pattern fittings shall be Class 150 malleable iron fittings of Crane Company or Walworth Company manufacture (300 lb. for unions). Change of pipe size shall be by bell reducer. Reducing bushings are prohibited.

E. Dirt Legs: At all connections of fuel gas piping to equipment or other points of use, a dirt leg shall be provided. Each dirt leg shall be sized no smaller than the fuel gas piping to which they are connected. The dirt legs shall be installed vertically at a change in pipe direction where the leg will be lower than the connected piping, and shall be no less than 6 inches long, unless noted otherwise. The dirt legs shall be installed with a pipe cap at the bottom of the leg to facilitate cleaning of the leg.

F. Protective Coating:

1. Fuel gas piping systems installed underground shall utilize pipe which has been factory coated with Scotchkote protective resin No. 212. All materials, surface preparation, application and testing shall conform to Federal Specification L-C-530 B-Type 2, dated June 4, 1970. This coating shall be applied by A&A Coating Company, Lone Star, Texas, or approved equal.
2. Underground welded joints and fittings shall be coated with Scotchkote No. 306 epoxy resin and taped with vinyl Scotchwrap-50 brand tape. Flanged joints shall be given two coats of Koppers Company No. 300M Catalyzed Coal Tar Epoxy.
3. Under no circumstances shall any backfilling operations begin until these pipe protection operations have been completed, tested, and inspected.

2.19 COMPRESSED AIR DISTRIBUTION SYSTEM

A. All pipe used for the fabrication of compressed air piping systems shall be Schedule 40 galvanized steel pipe which conforms in every detail to Standard Specifications for WELDED AND SEAMLESS STEEL PIPE, ASTM Designation A53, Type E or S. Unless otherwise specifically required, all galvanized steel pipe provided for compressed air piping systems shall be provided with threaded ends and assembled with flanged fittings on all pipe 2-1/2" and larger. All piping 2" and smaller shall be threaded. No pipe smaller than 3/4" shall be used. From the shutoff valve to the outlets the pipe shall be assembled with threaded fittings.

B. Air Cutoffs shall be installed at the compressor discharge (or connection, for portable compressors), and at each point of use. Where requirements differ, the greater quality or quantity shall govern. The cutoff shall consist of a ball valve, and the operation of the handle shall not interfere with use of the tap, or the operation of the equipment. In most cases the ball valve shall be installed in a vertical position.

C. All points of use not shown in the drawings to be connected directly to equipment shall be installed not only with an "air cutoff" as described above, but also a quick disconnect air connection.

D. All threaded pattern fittings shall be Class 150 galvanized malleable iron fittings equivalent to those manufactured by Crane Company or Walworth Company (300 lb. for unions). Change of pipe size shall be by bell reducer. Reducing bushings are prohibited.

E. At all taps or connections of compressed air supply piping to equipment or other points of use shall be made in the vertical upward direction. This is intended to allow for the draining of water or condensation away from the point of use.

PART 3 - EXECUTION

3.1 EXAMINATION

A. Verify that walls and floor finishes are prepared and ready for installation of fixtures.

3.2 PREPARATION

A. Ream pipe and tube ends. Remove burrs. Bevel plain end ferrous pipe.

B. Remove scale and dirt, on inside and outside, before assembly.

C. Prepare piping connections to equipment with flanges or unions.

D. Coordinate cutting and forming of floor construction to receive plumbing fixture rough-ins to required elevations.

E. Rough-in fixture piping connections in accordance with minimum sizes indicated in fixture rough-in schedule for particular fixtures.

3.3 INSTALLATION

A. Provide non-conducting dielectric connections wherever joining piping of dissimilar metals. All such fittings and/or unions shall comply with the requirements listed in Part 2 of this section, as well as any special requirements listed in the drawings.

B. Install isolation valves and unions at each piece of equipment, such as water heater, etc., and in such a manner to allow for ease of removal of the equipment.

C. Route piping in an orderly manner and maintain gradient.

D. Install piping to conserve building space and not interfere with use of space. All piping shall be installed against the building construction, and shall not be installed in such a manner to interfere with the free movement of personnel within the space. Installation of piping shall not interfere with the ability of personnel to service and maintain equipment and systems within the space.

E. Group piping whenever practical at common elevations.

F. Install piping to allow for expansion and contraction without stressing pipe, joints, or connected equipment.

G. Provide clearance for installation of insulation and access to valves and fittings.

H. Provide access where water hammer arrestors, valves and fittings are not exposed. Coordinate access door location with architectural features.

I. Establish elevations of buried piping outside the building to ensure a minimum of cover. Refer to details, if any, in the drawings.

J. Install valves with stems upright or horizontal, not inverted.

K. Threaded piping shall have pipe dope applied to the threads of the piping prior to assembly. The acceptable pipe dope shall be graphite or Teflon based paste (no lead solder is allowed in any part of this project) or a minimum of three layers of Teflon tape. Note that it is not acceptable to use excessive amounts of pipe dope to seal leaky pipe fittings, nor is it acceptable to use materials other than acceptable pipe dope materials to seal pipe fittings.

L. Install in accordance with Manufacturer's instructions.

M. Extend cleanouts to finished floor or wall surface. Lubricate threaded cleanout plugs with a mixture of graphite and linseed oil. Ensure clearance at cleanout for rodding of drainage system.

N. Install water hammer arrestors complete with accessible isolation valve.

O. Lead: It is forbidden that lead in any form be used in any water system other than waste. If lead is used in the fabrication or installation of any water system other than waste, then ALL of the installed equipment and material, which may have come in contact with the lead, shall be marked with bright red or orange spray paint, and shall be removed from the project site. The system(s) shall then be restored and reinstalled using ALL NEW MATERIALS.

P. Furnish and install all labor, materials, equipment, tools and services and perform all operations required in connection with or properly incidental to the installation of complete plumbing fixtures, as indicated on the Drawings, reasonably implied therefrom, or as specified herein, unless specifically excluded.

Q. Plumbing fixtures shall be supplied, set and connected as listed herein and as shown on the Drawings. Fixtures shall be protected from damage during construction, and shall be thoroughly cleaned of all tape and adhesives prior to final acceptance.

R. Coordinate special mounting heights of plumbing fixtures with architectural details of each toilet area.

S. Install each fixture with trap, easily removable for servicing and cleaning. The installation of multiple traps in-line is prohibited.

T. Install components level and plumb, except for piping requiring a slope.

U. Install and secure all fixtures in place with specified wall carriers and bolts.

V. Solidly attach floor mounted water closets to floor with lag screws. Flashing is not intended to hold fixture in place. Wall mounted water closets shall be mounted securely to carrier with long studs, washers and nuts.

W. Install ADA (mobility impaired accessible) water closets with flush valve operating handle, or pushbutton, oriented toward the latch side of the partition door, or toward the more open side of the water closet enclosure, whichever is more accessible for operation.

X. Install water heaters per Manufacturer's instructions and as detailed on drawings. Set initial temperature at 110°F.

3.4 ERECTION TOLERANCES

A. Establish invert elevations, slopes for drainage to 1/8 inch per foot (one percent) minimum for all piping systems except for waste water piping. Install waste water piping with 1/4 inch per foot (two percent) minimum gradient. Maintain gradients through each joint of pipe and throughout system. All other dimensions shall be installed within 1/4 inch, unless noted otherwise.

3.5 ALLOWABLE BENDS

A. Unless specifically allowed in the pipe Manufacturer's design criteria, deflections of the pipe will not be allowed at couplings. An allowable radius for pipe sections may be determined from the pipe Manufacturer, and shall be submitted for approval by the Owner prior to installation.

B. Bends in soft drawn copper piping shall be made using a tubing bender designed for the purpose of bending the size of pipe being installed.

3.6 DOMESTIC WATER PIPING SYSTEMS

A. All piping shall have reducing fittings used for reducing or increasing where any change in the pipe sizes occurs. No bushing of any nature shall be allowed in any piping.

B. All exposed chrome plated, polished or enameled connections from fixtures shall be installed with special care, showing no tool marks or threads at fittings, and supported where appropriate by neat racks or hangers with round head screws of same material and finish.

C. Wade Shokstop, or approved equal, sealed air chambers shall be provided in all water branches to fixtures, sized in accordance with Manufacturer's recommendations, concealed, accessible, and located so as to protect each group of plumbing fixtures. Equal products of other Manufacturers will be considered for approval.

D. The fabrication of copper pipe and fittings shall in every detail conform to the recommendations and instructions of the fitting Manufacturer. The tools used shall be the tools adapted to that specific purpose.

E. Piping to flush valves shall be firmly secured to prevent movement when operating the valves.

F. Refer to other parts of this Section for other information concerning installation of piping.

3.7 TESTING OF ALL POTABLE WATER SYSTEMS

A. All water piping systems shall be tested. In the event a piping system is to be insulated or concealed, the piping system shall be flushed and these tests shall be satisfactorily completed before any insulation is applied or the piping system is concealed. Buried piping systems shall be flushed, tested and disinfected prior to the backfill and covering of any of the piping. In the event that the trenches are backfilled prior to the witnessed (by the Owners Construction Inspector, or designate) completion of the testing, flushing and sterilization of the piping system, then the Contractor shall expose the piping and discard all backfill materials in an acceptable manner, and complete the specified procedure. The backfill of the piping trenches shall then be completed as specified.

B. The procedure of these tests shall consist of subjecting a piping system to the hydrostatic pressure listed at the end of this Section, (or 150 percent of maximum working pressure, if a working pressure is specified, whichever is less) for the period indicated in the table. During this test period, all pipe, fittings and accessories in the particular piping system which is being tested shall be carefully inspected. If leaks are detected, such leaks shall be stopped by means designated by the Owner's duly authorized representative and the hydrostatic test shall again be applied. This procedure shall be repeated until, for the entire test period, no leaks can be found while the system being tested is subjected to the pressure mentioned above. Note that the "detection of leaks" shall include a drop in test pressure of 5 pounds per square inch (a minimum of 3 percent of test pressure) or more.

C. Wherever conditions permit, each piping system shall thereafter be subjected to its normal operating pressure and temperature for a period of no less than five (5) days. During that period, it shall be carefully observed. The piping systems must demonstrate the propriety of their installation by remaining absolutely tight and without leaks during this period.

3.8 DISINFECTION OF DOMESTIC WATER PIPING SYSTEM

A. Water for flushing, testing, and disinfection of potable domestic water piping systems will be furnished by the Contractor. The Contractor shall furnish all labor, equipment, and materials necessary to complete the system disinfection procedures specified herein.

B. Prior to starting work, verify system is complete, tested, flushed and clean.

C. Ensure pH of water to be treated is between 7.4 and 7.6 by adding alkali (caustic soda or soda ash) or acid (hydrochloric).

D. Inject disinfectant (liquid chlorine conforming with U.S. Army Specification No. 4-1, calcium hypochlorite, or chlorinated lime conforming with the requirements of Federal Specification O-C-114), throughout system to obtain 50 to 80 mg/L residual Chlorine at all outlets or taps.

E. Bleed water from outlets to ensure distribution and test for disinfectant residual at a minimum of 15 percent of outlets.

F. Maintain disinfectant in system for 24 hours.

G. If final disinfectant residual tests less than 25 mg/L residual Chlorine, repeat treatment.

H. Flush disinfectant from system until the residual Chlorine is equal to that of incoming water or a maximum of 1.0 mg/L.

I. Take samples no sooner than 24 hours after flushing, from a minimum of 10 percent of outlets and from water entry, and analyze in accordance with AWWA C651.

J. The sterilization process shall be conducted as required by the Health Department of the local county, and the specifications above, and upon completion of the process, the Contractor shall contact the Health Department to test and certify the cleanliness of the water piping system. The Contractor shall pay all costs and charges, if any, incidental to this test and certification as a part of this project.

3.9 INSTALLATION OF SANITARY WASTE PIPING

A. Install in strict accordance with Manufacturer’s recommendations.

B. Lubricate cleanout plugs with mixture of graphite and linseed oil. Prior to substantial completion remove cleanout plugs, relubricate and reinstall using only enough force to ensure a leakproof joint.

C. Slope drainage lines minimum 1/4” per foot, 1/2” per foot maximum for waste lines.

D. Install exterior cleanouts at grade and set in concrete pad as detailed on drawings.

E. Flush piping clean with water after installation.

3.10 FABRICATION METHODS FOR SEWAGE AND DRAINAGE PIPE LINES

A. Complete the installation of all sewer drains and piping promptly after excavating, chasing or cutting for same has been done so as to keep the openings for such piping open as short a time as possible. No piping shall, however, be permanently closed up, furred in or covered before the testing and inspection of same by the authority(ies) having jurisdiction.

B. Waste pipes shall be sized to conform to the sizes indicated on the Drawings. Under no circumstances shall any drain line be smaller than two inches. The waste pipes from water closets shall not be smaller than four inches.

C. The drilling and tapping of soil or waste lines is prohibited.

D. Vent pipes shall be of same material as drainage piping.

E. All vent lines shall be so constructed that they cannot be used for waste or soil lines.

F. No fixture shall be double trapped.

G. All connections for wall mounted water closets and waste piping shall be made with an appropriate cast iron closet carrier and seal as recommended by the carrier Manufacturer.

3.11 TESTING SANITARY WASTE SYSTEMS

A. After the vertical lines of soil pipe, waste, and other parts of the sanitary system have been set, all outlets shall be temporarily “plugged up”, except as are required for testing as described herein. The piping shall be tested to the pressure and time listed in the table at the end of this section. The pipes shall be filled with water to a verifiable and visible level as described above and be allowed to remain so for the test period indicated in the table at the end of this section. If, end of the test period, the level of the water has been lowered by leakage, the leaks shall be found and repaired, and the water level shall again be raised to the level described, and the test repeated until, after the test period, there shall be no perceptible lowering of the water level in the system being tested.

B. Should the completion of these tests leave any reasonable doubt relative to the integrity of the installation, additional tests or measures shall be performed to demonstrate the reliability of these systems to the complete satisfaction of the Owner’s duly authorized representative. Such tests shall be conducted and completed before any joints in plumbing are concealed or made inaccessible.

C. After all testing operations have been completed, all waste and vent lines shall be flushed with clean water.

3.12 INTERFACE WITH OTHER PRODUCTS

A. Review millwork shop drawings. Confirm location and size of fixtures and openings before rough-in and installation.

3.13 ADJUSTING

A. Adjust work under provisions of Section 15050.

B. Adjust stops or valves for intended water flow rate to fixtures without splashing, noise, or overflow.

3.14 CLEANING

A. Clean work under provisions of Section 15050.

B. At completion clean plumbing fixtures and equipment.

3.15 PROTECTION OF FINISHED WORK

A. Protect finished Work under provisions of Section 15050.

B. Do not permit any use of fixtures during construction, until after Substantial Completion has been announced by Owner.

3.16 FIXTURE HEIGHTS (All heights are "above finished floor" unless noted otherwise. All heights listed shall be used, unless noted otherwise in 1) Architectural, or 2) Plumbing, Plans.)

A. Tolerances: Note that all heights listed herein are intended to allow a tolerance of ±1/2", unless a specific range is given.

B. Water-Closet
1. Standard: nominal 14 inches to top of bowl rim
2. Accessible: 17 to 19 inches to top of installed elevation of seat.

C. Urinal
1. Standard: 25 inches to bowl rim
2. Accessible: 17 inches to bowl rim, and shall project a minimum of 14 inches from wall.

D. Lavatory (All installations): 32 inches to top of basin rim.

E. Hose Bibb (All installations): 18 inches A.F.F. (above final grade, if no floor) to center of outlet of hose bibb.

3.17 FUEL GAS DISTRIBUTION SYSTEM FABRICATION METHODS

A. All interior fuel gas piping shall, wherever possible, be installed so as to grade back toward the building entrance.

B. All piping shall be securely fastened in place in such a manner as to maintain its grading. Under no circumstances shall any gas piping be used to support any weight other than its own weight.

C. The general arrangement of all fuel gas piping shall be such that the number of threaded joints involved is reduced to an absolute minimum. If obstructions are encountered, pipe shall not be bent to avoid such obstructions. Welding fittings shall be used for this purpose in the case of welded lines, and if threaded lines are involved, threaded fittings shall be used. Wherever fuel gas pipes run through outside brick, stone, or other walls, the opening around the pipe shall be securely and rigidly sealed with a resilient seal. Fuel gas pipe sizes shall be at least one pipe size larger than the inlet of the gas appliance which they supply. No bushings shall be used in the installation of the system. If pipe sizes must be changed, then only bell reducers may be used.

D. Fuel gas piping shall be thoroughly tested after installation. The procedure of these tests shall consist of subjecting a piping system to a pneumatic (air) pressure as listed in the table at the end of this section. The length of the test shall be as given in the table. During this test period, all pipe, fittings and accessories in the piping system which is being tested shall be carefully inspected with a soapy leak testing fluid. If leaks are detected, such leaks shall be stopped by means designated by the Owner's duly authorized representative and the test shall again be applied. This procedure shall be repeated until, for an entire twenty-four hour period, no leaks can be found while the system being tested is subjected to the pressure mentioned above. Note that the "detection of leaks" shall include a drop in test pressure of 5 pounds per square inch or more.

3.18 COMPRESSED AIR DISTRIBUTION SYSTEM FABRICATION METHODS

A. All interior compressed air piping shall, wherever possible, be installed so as to grade back toward the compressed air tank.

B. All air piping shall be securely fastened in place in such a manner as to maintain its grading. Under no circumstances shall any piping be used to support any weight other than its own weight.

C. The general arrangement of all air piping shall be such that the number of joints installed is reduced to an absolute minimum. If obstructions are encountered, pipe shall not be bent to avoid such obstructions. Welding fittings shall be used for this purpose in the case of welded lines, and if threaded lines are involved, screwed fittings shall be used. Wherever pipes run through exterior brick, stone, or other walls, the opening around the pipe shall be securely and rigidly sealed. No bushings shall be used in the installation of the system. If pipe sizes must be changed, then only bell reducers may be used.

D. Compressed air piping shall be thoroughly tested after installation. The procedure of these tests shall consist of subjecting a piping system to the pneumatic (air) pressure indicated in the table at the end of this Section for the test period indicated. During this test period, all pipe, fittings and accessories in the particular piping system which is being tested shall be carefully inspected. If leaks are detected, such leaks shall be stopped by means designated by the Owner's duly authorized representative and the test shall again be applied. This procedure shall be repeated until, for an entire twenty-four hour period, no leaks can be found while the system being tested is subjected to the pressure mentioned above. Note that the "detection of leaks" shall include a drop in test pressure

of 5 pounds per square inch or more. If there is a significant change in ambient temperature from the beginning to the end of the test, then this shall be considered if there is a significant drop in pressure. At the discretion of the State's representative, the test may be repeated.

E. Wherever conditions permit, the piping system shall thereafter be subjected to its normal operating pressure and temperature for a period of no less than five (5) days. During that period, it shall be carefully observed. The piping systems must demonstrate the propriety of their installation by remaining absolutely tight and without leaks during this period.

3.19 TESTING

A. All piping systems shall be tested at pressures appropriate to their service. The following test pressures and periods of test shall be used, unless noted otherwise. If lesser pressures or test periods are specified, then the pressures and periods listed below shall prevail:

Piping System	Test Pressure	Test Period
Water	100 psig	1 hour
Sanitary Sewer & Vent	10 ft of head	1 hour
Fuel Gas	10 psig	1 hour
Compressed Air	150 psig	1 hour

END OF SECTION

SECTION 15490

CLOSED LOOP WATER RECYCLING SYSTEM

PART 1 - GENERAL

1.1 SECTION INCLUDES

A. Closed Loop Water Recirculation System

B. Pressure Washer

1.2 RELATED SECTIONS

A. Section 15010 – Basic Mechanical Requirements

B. Section 15140 – Supports and Anchors

C. Section 15260 – Piping Insulation

D. Section 15400 – Plumbing Piping and Associated Materials

E. Division 16 – Electrical

1.3 REFERENCES

A. ANSI/NFPA 70 – National Electrical Code

B. ANSI B31.9 – Building Service Piping

C. ASTM A53 – Pipe, Steel, Black and Hot-Dipped Zinc Coated, Welded and Seamless

D. ASTM B32 – Solder Metal

E. ASTM B42 – Seamless Copper Pipe

F. ASTM B43 – Seamless Red Brass Pipe

G. ASTM B75 – Seamless Copper Tube

H. ASTM B88 – Seamless Copper Water Tube

I. ASTM B251 – Wrought Seamless Copper and Copper-Alloy Tube

J. ASTM B302 – Threadless Copper Pipe (TP)

K. NSF – National Sanitation Foundation

L. TCEQ – Texas Commission for Environmental Quality, Water System Regulations

M. TDH – Texas Department of Health

N. IBC – International Building Code, latest edition

O. UMC – Uniform Mechanical Code, latest edition

P. UPC – Uniform Plumbing Code, latest edition

1.4 SUBMITTALS

A. Submit under provisions of UGC and Special Conditions.

B. Product Data: Provide data on capacities, ratings, Manufacturer's recommended clearances, dimensions, and construction. Provide Manufacturers catalog information on all components and their operation and maintenance.

1.5 QUALITY ASSURANCE

A. Manufacturer's Installation Instructions: Indicate assembly and support requirements.

B. Ensure products and installation of specified products are in conformance with recommendations and requirements of the following organizations:
1. National Electrical Manufacturers' Association (NEMA)
2. National Sanitation Foundation (NSF)
3. Underwriters Laboratories (UL)

1.6 QUALIFICATIONS

A. Manufacturer: Company specializing in manufacturing the Products specified in this section with minimum three years documented experience.

B. Installer: Shall be certified and approved for marketing, installation and servicing of the system by the system Manufacturer. Documentation of this certification shall be submitted for approval.

1.7 REGULATORY REQUIREMENTS

A. Perform Work in accordance with the following: Uniform Plumbing Code, Uniform Mechanical Code, TCEQ and TDH Regulations.

1.8 DELIVERY, STORAGE, AND HANDLING

A. Deliver, store, protect and handle products to site under provisions of Section 15010.

B. Provide temporary end caps and closures on all piping and fittings. Maintain in place until installation.

1.9 WARRANTY

A. Contractor shall provide one-year warranty on all materials and workmanship.

PART 2 - PRODUCTS

2.1 WATER RECYCLING SYSTEM, GENERAL

A. Equipment capacities and options shall be as scheduled, or as specified herein, whichever is greater.

B. In some cases it may not be possible to describe in adequate detail the exact installation of a feature or equipment. In those instances, the Contractor shall solicit the guidance and direction of the Engineer, whose decision will be final.

C. The system as installed shall be complete in every respect, ready for operation at the completion of the installation.

D. System as installed shall be weather tight, capable of reliable operation without the need for a weather proof enclosure. All protection required for system components shall be included in the construction of the system.

E. Complete system shall not exceed a footprint of 24 feet by 16 feet and shall not exceed a height of 10 feet, unless a larger size is approved.

F. The system shall include the aeration of the Washbay separation pit.

2.2 WATER RECYCLING SYSTEM MANUFACTURER

A. Water Maze Water Treatment Systems

B. Approved equal

2.3 CAPACITY

A. Unit shall have the ability to process a minimum of 5 gallons of untreated water per minute, and process water with an oil content of up to 5 percent and total suspended solids (TSS) of 10,000ppm (1%).

2.4 WATER TREATMENT

A. Unit shall include an oil and grease separator, and a sediment separator. Separation may be performed in a single unit.

B. System shall include a process of adding bioremediation material to the water as a means of purifying the recirculated water. The bioremediation materials shall be intrinsically safe and shall not require special handling.

C. The system shall include the ability to aerate the water in the washbay collection pit, in addition to providing aeration for the process.

D. The final water shall be treated with ozone to reduce and eliminate the carryover of any bioremediation materials.

E. All internal and external parts shall be resistant to corrosion.

F. Separator shall have the capability to place the waste oil and grease in an owner provided 55 gallon drum.

G. Separator shall have continuous solids separation and filtration system(s).

2.5 WATER FILTRATION

A. Water submitted for reuse shall contain no greater than 50 micron particle size of solids. System may automatically purge solids to the washbay separation pit.

2.6 WATER STORAGE

A. System shall include a minimum of 500 gallons of water storage capacity to allow for surges in water flow. Storage tank shall include a drain valve and hose for draining stored water.

2.7 PUMPS

A. System shall include the ability to pump raw water from a 5 foot deep sump (indicated in the drawings).

B. System shall include all pumping capacity required by the system for supply of stored water at a pressure of 60 psig, at minimum required flow capacity.

2.8 OPERATING CONTROLS

A. The turnkey system shall include complete controls for the automatic operation of all components to operate as an integrated system. Controls shall be analog, and shall require no special programming. A control panel shall be included, and shall have the following features as a minimum:
   1. Selective switches for manual and automatic pump operation, as well as an “off” position (“H-O-A” switches).
   2. Yellow and red indicator lights for low and high level alarms for all open vessels and basins.
   3. Complete labeling with easily understood descriptions for all features.
   4. A complete schematic for operation and troubleshooting.

2.9 WATER RECYCLING SYSTEM POWER REQUIREMENTS

A. Required power shall be supplied at a single point. Power shall be 120 or 208/240 volts, AC, single phase. A single 208/240 volt, single phase AC circuit of no greater than 40

amps shall be sufficient to supply all power requirements for the system. (Note that a single 40 amp, single phase, 208/240 VAC circuit is shown on the plans. Contractor shall provide a properly sized and protected circuit(s) necessary to power the equipment provided.)

B. System shall include all NEC required electrical protection for each powered device.

2.10 PRESSURE WASHER

A. A pressure washer shall be provided under this contract. The pressure washer shall comply with the following. Unit shall be Alkota Model # 418X4, or approved equal.

B. Factory manufactured water heater and integral pressure booster.

C. Water heater heats water to a minimum of 100°F (adjustable), using diesel oil for fuel, minimum 12 gallon fuel tank.

D. Pressure booster increases water pressure, to a minimum pressure of 1800 psig. Water flow shall be minimum 4.0 gpm, with a 5.0 horsepower pump.

E. System shall include a minimum of 50 feet (unless noted otherwise on drawings) of pressure rated hose rated for an operating pressure of 3000 psig, and a trigger operated wash “wand” and atomizing pressure nozzle.

F. System shall include a chemical feeder for the precise blending of detergents.

G. Refer to equipment schedule on drawings for additional requirements, if any.

2.11 WARRANTY

A. The Contractor shall provide an unconditional one year warranty from the date of substantial completion that shall include monthly inspections, complete parts and labor for all equipment or material failures, complete supply of consumables provided on a monthly basis delivered to the site.

PART 3 - EXECUTION

3.1 INSTALLATION

A. Manufacturer trained and certified technicians shall install the system according to Manufacturers written instructions.

B. Install and connect all power and piping as required by Manufacturers written instructions.

C. As part of the requirements shown here and in the plans, Contractor shall coordinate trades to minimize interference with the installation and placement of the system. Contractor shall install the system in the location indicated on plans. If Contractor has any question concerning the installation as indicated here or in the drawings, the

Contractor shall seek the advice and guidance of the Owner's Construction Inspector and/or Engineer. The decision of the Engineer shall be final.

3.2 COMMISSIONING

A. Startup Services shall be provided to start and demonstrate units, and operate controls and safeties.

B. Test and Adjust controls and safeties, replace damaged or malfunctioning controls and equipment.

C. Correct deficiencies identified by test and observations and retest until specified requirements are met.

3.3 TRAINING

A. A Manufacturer trained and certified technician shall provide a minimum of eight (8) hours training in the operation and maintenance of the system to no less than four (4) of the Owner's personnel. Contractor shall give a minimum of one week notice when preparing to provide the training.

B. Complete descriptive training material shall be provided for each of the Owner's personnel trained. The training material shall include, as a minimum, the following:
1. A complete description of the operation of each of the system's components
2. How each component operates with the system
3. How the controls work and how to adjust each control
4. Suggested troubleshooting for expected malfunctions
5. Required maintenance
6. A complete maintenance schedule for all serviceable components
7. A complete parts list
8. Methods of repair

3.4 OPERATION AND MAINTENANCE

A. The final installation shall be complete and functional in every respect. The equipment shall perform as specified, and all features of every piece of equipment installed under this contract shall be accessible for operation and maintenance. In addition, the installation of the materials or equipment for this project shall provide access for all features for the operation and maintenance of related or adjacent equipment to the materials and equipment installed under this project. Contractor shall install all equipment and materials as specified so that all equipment is completely accessible for such maintenance and operation as changing filters, replacing motors, oiling bearings, inspecting and repairing controls, etc.

B. All necessary MSDS shall be included in all material supplied to the owner at the completion of the project, including training manuals and operation and maintenance manuals.

END OF SECTION

SECTION 15540

FUEL FIRED HEATERS

PART 1 - GENERAL

1.1 SECTION INCLUDES

A. Low Intensity Tube Infrared Heaters

B. High Intensity Ceramic Burner Infrared Heaters

C. Point of use Pressure Regulators

1.2 RELATED SECTIONS

A. Section 15050 – Basic Mechanical Requirements

B. Section 15060 – Supports and Anchors

C. Section 15400 – Plumbing Piping and Associated Materials

1.3 REFERENCES

A. AGA – American Gas Association

B. ANSI/ASHRAE 90A – Energy Conservation in New Building Design

C. NFPA 54 – National Fuel Gas Code

D. UMC – Uniform Mechanical Code, latest edition

E. UPC – Uniform Plumbing Code, latest edition

1.4 SUBMITTALS

A. Submit under provisions of Uniform General Conditions, Special General Conditions, and Section 15050.

B. Product Data: Provide data on infrared heaters, input ratings, Manufacturer's recommended clearances, dimensions, tube size and construction. Provide Manufacturers catalog information on indoor and outdoor thermostats, connections to emitter tubes for single and double venting combustible product as well as combustible air.

1.5 QUALITY ASSURANCE

A. Radiant Heaters: Manufacturer's name, American Gas Association label, and input rating clearly shown on burner housing.

B. Thermostats: Manufacturer's name and the (UL) label and NEMA classification clearly shown on thermostats and radiant heaters.

C. Manufacturer's Installation Instructions: Indicate assembly and support requirements.

D. Ensure products and installation of specified products are in conformance with recommendations and requirements of the following organizations:
1. National Electrical Manufacturers' Association (NEMA)
2. Underwriters Laboratories (UL)
3. AGA – American Gas Association
4. ANSI B31.2 – Fuel Gas Piping Code
5. ANSI Z83.6 – Gas-Fired Infrared Heaters

1.6 QUALIFICATIONS

A. Manufacturer: Company specializing in manufacturing the Products specified in this section with minimum three years documented experience.

1.7 REGULATORY REQUIREMENTS

A. Perform Work in accordance with the following: Uniform Plumbing Code, Uniform Mechanical Code, National Fuel Gas Code (NFPA-54), TNRCC and TDH Regulations.

1.8 DELIVERY, STORAGE, AND HANDLING

A. Deliver, store, protect and handle products to site under provisions of Section 15050.

B. Accept valves on site in shipping containers with labeling in place. Inspect for damage.

C. Provide temporary end caps and closures on piping and fittings. Maintain in place until installation.

D. Protect the emitter tubes and the ceramic burners from entry of foreign materials by use of temporary covers, completing sections of the work, and isolating parts of completed system.

1.9 WARRANTY

A. Contractor shall provide one-year warranty on all materials and workmanship, a Manufacturer five-year warranty on tube heater’s combustion and radiant emitter tube assembly and a 10-year warranty on the ceramic burners.

PART 2 - PRODUCTS

2.1 GENERAL

A. Equipment capacities and options shall be as scheduled, or as specified herein, whichever is greater.

B. In some cases it may not be possible to describe in adequate detail the exact installation of a feature or equipment. In those instances, the Contractor shall solicit the guidance and direction of the Owners Construction Inspector, whose decision will be final.

2.2 MANUFACTURER (Note: all low and high intensity infrared heaters, thermostats, dual exhaust assemblies and elbow 90° bends shall be products of the same Manufacturer):

A. Re-verber-ray, Model DX and DR Series heaters as indicated in drawings

B. Ray-Tec

C. Approved equal

2.3 GAS-FIRED TUBULAR INFRARED HEATERS

A. Comply with ANSI Z83.6, “Gas-Fired Infrared Heaters”.

B. Certified label by American Gas Association.

C. Certified label by Underwriters' Laboratories.

D. Designed and built to burn liquid propane gas with characteristics same as those of gas available at Project site.

E. Factory assembled, piped, wired, and tested for 120 VAC.

F. Stainless steel or aluminized steel with high-emissivity, high-temperature, corrosion-resistant external finish.

G. Heater shall be equipped with a direct silicon carbide ignition system, two safety differential pressure switches, pre-purge feature before initiating burner operation and a burner sight glass visible from the floor of the occupied space.

H. Reflectors shall be polished stainless steel or aluminum, with reflector end caps, capable of rotating from 0 to 45 degrees when required.

I. As indicated in plans install a dual exhaust assembly “Y” shaped aluminized steel with high temperature coating connecting to a 6 inch Type “B” vent with both heaters on a common thermostat.

2.4 OPERATING CONTROLS (“Thermostat”)

A. External thermostats shown in schedule.

PART 3 - EXECUTION

3.1 INSTALLATION

A. Install heaters according to Manufacturer’s written instructions.

B. Install and connect gas-fired heaters and associated fuel and vent features and systems, installed and connected according to NFPA-54, applicable local codes and regulations, and Manufacturer's printed installation instructions.

C. Where indicated in plans install a dual exhaust assembly "Y" shaped aluminized steel with high temperature coating connecting to a 6 inch Type "B" vent, heaters shall be controlled with a common thermostat.

D. All tube heaters shall have an outside combustible air intake vent (PVC 4-inch vent). Provide insect screen on inlet.

E. As part of the requirements shown here and in the plans, Contractor will be required to coordinate trades to minimize interference with the installation and placement of the radiant heaters. Contractor is required to install the radiant heaters where indicated on plans. If Contractor feels the placement of the radiant heaters is not achievable due to interference, combustible clearances, safety issues or possible hazards, he or she shall seek advice and guidance through the Owner's Construction Inspector and/or Engineer whose decision shall be final.

3.2 ADJUSTING AND CLEANING

A. Adjust natural gas pressure reducing regulators for optimum pressure requirements as recommended by Manufacturer. Contractor is required to adjust building pressure regulator to deliver proper pressure to the point of use regulators that shall be installed for each and every radiant heater, as recommended by Manufacturer.

B. Adjust burner and other unit components for optimum heating and performance and efficiency. Adjust heat distribution features, including reflectors, to provide optimum heat distribution for objects, personnel, and spaces served.

C. After completing system installation, inspect heaters and associated components. Repair scratches and mars of finish to match original finish. Clean unit internally using methods and materials recommended by Manufacturer.

3.3 COMMISSIONING

A. Startup Services shall be provided to start and demonstrate units, and operate controls and safeties.

B. Test and Adjust controls and safeties, replace damaged or malfunctioning controls and equipment.

C. Correct deficiencies identified by test and observations and retest until specified requirements are met.

3.4 OPERATION AND MAINTENANCE

A. The final installation shall be complete and functional in every respect. The equipment shall perform as specified, and all features of every piece of equipment installed under this contract shall be accessible for operation and maintenance. In addition, the

installation of the materials or equipment for this project shall provide access for all features for the operation and maintenance of related or adjacent equipment to the materials and equipment installed under this project. Contractor shall install all equipment and materials as specified so that all equipment is completely accessible for such maintenance and operation as changing blower motors, oiling fans, inspecting and repairing controls, etc.

END OF SECTION

SECTION 15761

DUCTLESS AIR CONDITIONING SYSTEMS

PART 1 - GENERAL

1.1 SECTION INCLUDES

A. Outside unit

B. Refrigerant piping and insulation

C. Condensate piping and insulation

D. Controls

E. Condensate drain

1.2 SCOPE

A. The Contractor shall install a wall mounted ductless air conditioning unit (cooling only) and all appurtenances complete in every respect, as specified herein. The completed installation shall be fully functional and comply with all state, federal and local codes, standards and regulations.

1.3 RELATED SECTIONS

A. Section 15050 – Basic Mechanical Requirements

1.4 REFERENCES: In addition to state and local ordinances, standards and codes published by the following shall govern the quality of the construction applicable:

A. ASHRAE – American Society of Heating, Refrigeration and Airconditioning Engineers

B. ARI – American Refrigeration Institute

C. SMACNA – Sheet Metal and Airconditioning Contractors National Association

D. NEC – National Electrical Code (NFPA 70)

1.5 SUBMITTALS

A. Submit under provisions of the Uniform General Conditions and Special Conditions, and Section 15050.

B. Product Data: Submittal(s) shall include Manufacturers data on all equipment and materials, including air conditioner equipment (including rated capacities, electrical characteristics and connection requirements), piping (refrigerant and drain piping) insulation, and thermostat.

C. Submit credentials of Contractor and responsible on-the-job employees.

D. Submit Manufacturer's Installation Instructions.

1.6 QUALITY ASSURANCE

A. Perform Work in accordance with ANSI/ASHRAE 15.

B. Install equipment in accordance with ASHRAE and SMACNA Standards, and Manufacturers recommendations.

C. All mechanical work shall be performed by, or under the direct supervision of, a locally licensed mechanical contractor with a minimum of five years of documentable experience in the installation and repair of similar equipment to that described for this project.

1.7 WARRANTY

A. Provide one year warranty on all materials and workmanship, and Manufacturers five year warranty on air conditioning compressor.

PART 2 - PRODUCTS

2.1 GENERAL

A. Equipment capacities and efficiencies shall be as scheduled, or as specified herein, whichever is greater.

B. In some cases it may not be possible to describe in adequate detail the exact installation of a feature or equipment. In those instances, the Contractor shall solicit the guidance and direction of the Owners Construction Inspector, whose decision will be final.

2.2 MANUFACTURER (Note that both the inside and outside units shall be products of the same Manufacturer.)

A. Friedrich

B. Mitsubishi

C. Sanyo

D. Approved equal

2.3 OUTSIDE UNIT

A. Self contained factory built outdoor package containing compressor, refrigerant drier, reversing valve, condenser coil and condenser fan.

B. Compressor: hermetic, 3600 rpm maximum, resiliently mounted integral with condenser securely bolted in place, with positive lubrication, crankcase heater, high pressure

control, motor overload protection, service valves and drier. Scroll compressors are preferred, but not required.

C. Air Cooled Condenser: copper tube and aluminum fin coil, with direct drive axial propeller fan resiliently mounted, galvanized fan guard.

D. Cooling Capacity: Rated cooling output as scheduled in the drawings.

E. Installation: The units shall be installed on a concrete equipment pad with a resilient pad at each corner of the unit, plus a resilient pad at the mid point of units longer than 4 feet. Each resilient pad shall be a 4" square ribbed neoprene sandwiching a layer of cork. The pad shall be constructed of a 1/2" layer of cork laminated between 1/4" layers of ribbed neoprene. The equipment platform shall be provided of such size that the pad shall be a minimum of 12 (twelve) inches larger than the unit on all sides, with 36 inches between units. Refer to detail(s) on drawing.

2.4 REFRIGERATION PACKAGE

A. Refrigerant Line Set: Sized as recommended by Manufacturer. Insulation shall be installed on both refrigerant lines **prior** to installation. Install 1/2" thickness Armaflex (or approved equal), and paint insulation with two coats of exterior latex where insulation is exposed to sunlight.

2.5 INDOOR UNIT

A. Configuration: Electric refrigeration indoor coil and integral filter section with replaceable "throw-away" filter.

B. Units: Self-contained, units, factory assembled, pre-wired unit consisting of cabinet, supply fan, integral circuit breaker, controls, air filter, and inside coil. Cabinet shall be constructed with a high impact resistant plastic concealing all tubing and wiring. Cabinet panels shall be removable for complete access to all serviceable components.

C. Air Handling: Fan shall be capable of moving required air quantities required with a dirty filter in place. Provide belt driven blower(s) with heavy duty, self aligning, permanently sealed and lubricated bearings. All moving parts shall be resiliently mounted on a rugged frame, and isolated from the rest of the cabinet. Adjustable motor pulley shall provide variable speed adjustment.

D. Indoor Unit Inside Coil: Copper tube aluminum fin assembly, with drain pan, drain connection, refrigerant piping connections and factory installed thermostatic expansion valve.

E. Controls: Each unit shall be furnished with a complete and working system of controls, contactors, relays, control power transformer, and terminal block.

F. The unit shall be supplied with a factory manufactured return grille, mounted directly to the unit, for a "non-ducted" air return. The return grille shall not interfere with the removal and replacement of filters.

2.6 CONDENSATE DRAIN

A. Condensate piping shall be hard drawn Type K copper, installed with a minimum of 1/8 inch per foot slope, shall have a minimum 4 inch deep P-trap, and shall be completely insulated with 1/2" wall Armaflex closed cell piping insulation, or approved equal. All turns in the piping system shall be accomplished using long sweep bends. Short radius 90's shall not be used.

2.7 SECONDARY DRAIN

A. If the equipment is supplied with a secondary drain connection, piping shall be hard drawn Type K copper, installed with a minimum of 1/8 inch per foot slope, installed without a "P-trap", and connected to the primary condensate drain ahead ("upstream") of the primary drain P-trap.

2.8 OPERATING CONTROLS ("Thermostat")

A. Programmable low voltage (24 volt DC) thermostat with subbase, cycle's indoor and outdoor unit to maintain room temperature setting. Thermostat shall be equipped with a subbase with an "off-cool" switch, where the "off" setting shall disable the system. The "cool" setting shall cycle the outdoor unit on and off to maintain the room temperature setting. Thermostat subbase shall also be equipped with a "FAN: On - Auto" switch which in the "auto" position, shall cause the fan to operate automatically with the cooling cycles, and in the "on" position, the fan shall be "on" at all times. The thermostat shall be capable of controlling the room temperature within 2 degrees of set point. Programmability shall include four daily set points or two each of "occupied" and "unoccupied" periods per day. Weekdays shall be programmed separate from weekend days, but not necessarily individually. Thermostat shall be manufactured by unit Manufacturer, unless noted otherwise. Operating manuals shall be supplied with each thermostat.

B. Remotely operated temperature controls are acceptable as an alternative, and shall be submitted for approval by the engineer.

PART 3 - EXECUTION

3.1 GENERAL

A. When removing refrigerant for any reason, Contractor shall capture refrigerant with a compressor package designed and manufactured for that purpose, and dispose of the refrigerant to a certified refrigerant recycling facility. Under no circumstances shall refrigerant be released directly to the atmosphere. All refrigerants shall be handled and stored as required by current federal, state and local standards, recommendations, regulations, ordinances, and laws.

B. Contractor shall install refrigerant piping, and charge unit. Charging unit consists of drawing a complete vacuum on the refrigerant containing system, including piping, and charging with new refrigerant. Care shall be taken in the installation of refrigerant to

eliminate the discharge of refrigerant to the atmosphere. System shall be run and pressures checked to assure that system is properly charged.

C. The finished cooling system shall operate as specified and according to the standards, guidelines and regulations referenced.

D. Electrical installation, connection of equipment to electrical supplies and installation of wiring and conduit shall conform to NEC standards, recommendations and requirements, and to the electrical drawings.

3.2 OPERATION AND MAINTENANCE

A. The final installation shall be complete and functional in every respect. The equipment shall perform as specified, and all features of every piece of equipment installed under this contract shall be accessible for operation and maintenance. In addition, the installation of the materials or equipment for this project shall provide access for all features for the operation and maintenance of related or adjacent equipment to the materials and equipment installed under this project. Contractor shall install all equipment and materials as specified so that all equipment is completely accessible for such maintenance and operation as changing filters, operating disconnect switches or breakers, inspecting and repairing controls, cleaning coils, etc.

END OF SECTION

SECTION 15767

HEAT PUMP AIR CONDITIONING SYSTEMS

PART 1 - GENERAL

1.1 SECTION INCLUDES

A. Air Handler Indoor units

B. Heat pump outside units

C. Controls

1.2 SCOPE

A. The Contractor shall install heat pump systems with electric auxiliary heat and all appurtenances complete in every respect, as specified herein. The completed installations shall be fully functional and comply with all state, federal and local codes, standards and regulations.

1.3 RELATED SECTIONS

A. Section 15050 – Basic Mechanical Requirements

B. Section 15097 – Duct Insulation

C. Section 15810 – Ductwork

D. Section 15820 – Ductwork Accessories

1.4 REFERENCES - In addition to state and local ordinances, standards and codes published by the following shall govern the quality of the construction applicable:

A. ASHRAE – American Society of Heating, Refrigeration and Airconditioning Engineers

B. ARI – American Refrigeration Institute

C. SMACNA – Sheet Metal and Airconditioning Contractors National Association

D. NEC – National Electrical Code (NFPA 70)

E. UMC – Uniform Mechanical Code, latest edition

F. UPC – Uniform Plumbing Code, latest edition

1.5 SUBMITTALS

A. Submittal must follow the provisions of the Uniform General Conditions and Special Conditions, and Section 15050 of these specifications.

B. Product Data: Provide Manufacturers data on all equipment and materials, including all indoor and outdoor units.

C. Provide complete Manufacturer's Installation Instructions.

1.6 QUALITY ASSURANCE

A. Perform Work in accordance with ANSI/ASHRAE 15.

B. All mechanical work shall be performed by, or under the direct supervision of, a locally licensed mechanical contractor with a TDLR Class "A" Installer's License, and a minimum of five years of documentable experience in the installation and repair of similar equipment to that described for this project.

C. No asbestos-bearing, or solvent based, or lead containing materials shall be used on this project. If any prohibited materials are installed, all of the material, including the underlying material, shall be removed and disposed of as required by local, state, and federal requirements.

1.7 WARRANTY

A. Provide one-year warranty on all materials and workmanship, and Manufacturer's five-year warranty on air conditioning compressors.

PART 2 - PRODUCTS

2.1 GENERAL

A. Equipment capacities and efficiencies shall be as scheduled, or as specified herein, whichever is greater.

B. In some cases it may not be possible to describe in adequate detail the exact installation of a feature or equipment. In those instances, the Contractor shall solicit the guidance and direction of the Owners Construction Inspector, whose decision will be final.

2.2 HEAT PUMP and AIR HANDLER MANUFACTURER (Note that both the inside and outside units shall be products of the same Manufacturer.)

A. Trane

B. Carrier

C. Lennox

D. Approved equal

2.3 OUTSIDE UNIT

A. Self contained factory built outdoor package containing compressor, refrigerant drier, reversing valve, condenser coil and condenser fan.

B. Compressor: hermetic, 3600 rpm maximum, resiliently mounted integral with condenser securely bolted in place, with positive lubrication, crankcase heater, high pressure control, motor overload protection, service valves and drier. Scroll compressors are preferred, but not required.

C. Air Cooled Condenser: copper tube and aluminum fin coil, with direct drive axial propeller fan resiliently mounted, galvanized fan guard.

D. Cooling Capacity: Rated cooling output as scheduled in the drawings in accordance to A.R.I. Standard 210/240 Rating Conditions.

E. Unit shall include low ambient controls for operation at ambient conditions down to 20°F.

F. Installation: The units shall be installed on a poured-in-place concrete equipment pad with a resilient pad at each corner of the unit, plus a similar resilient pad at the mid point of units longer than 4 feet. Each resilient pad shall be 4" square. The pads shall be constructed of a 1/2" layer of cork laminated between 1/4" layers of ribbed neoprene. The equipment platform shall be provided of such size that the pad shall be a minimum of 6 (six) inches larger than the unit on all sides, with a minimum of 48 inches between units. Refer to detail(s) on drawing. In the event of a conflict, the greater quantity, quality, and distances shall prevail.

2.4 INDOOR UNIT

A. Configuration: Horizontal type with electric heating, electric refrigeration heat pump coil, and integral filter section with replaceable "throw-away" filter. There shall be a single point electrical connection on each indoor unit/furnace.

B. Units: Self-contained, factory assembled, pre-wired unit consisting of cabinet, supply fan, electric heating unit, integral circuit breaker, controls, air filter, and heat pump inside coil. Cabinet shall be constructed of heavy gauge galvanized steel, completely lined with thick fiberglass insulation. Cabinet panels shall be removable for complete access to all serviceable components.

C. Heating Elements: Helix wound nichrome bare heating elements, directly exposed in the air stream.

D. Air Handling: Fan shall be capable of moving required air quantities required by both heating and cooling modes, with ductwork as designed connected to the equipment, and dirty filter in place. Provide belt driven blower(s) with heavy duty, self aligning, permanently sealed and lubricated bearings. All moving parts shall be resiliently mounted on a rugged frame, and isolated from the rest of the cabinet.

E. Heat Pump Inside Coil: Copper tube aluminum fin assembly, galvanized drain pan, drain connection, refrigerant piping connections and factory installed thermostatic expansion valve.

F. Controls: Thermal sequencer relay brings the heating elements on and off line, in sequence and equal increments, with a time delay between each element. Sequencer also initiates and terminates blower operation. Heaters shall be factory assembled with controls installed and completely prewired for plug-in field power connection. Fixed stop at maximum permissible setting, will de-energize electric heat on excessive temperature and re-energize when temperature drops to lower safe value. Each unit shall be furnished with a complete and working system of controls, contactors, relays, control power transformer, and terminal block.

2.5 REFRIGERATION PACKAGE

A. Refrigerant Line Set: Sized as recommended by Manufacturer. Insulation shall be installed on each refrigerant line (both liquid and suction) prior to installation. Install 1/2" thickness Armaflex (or approved equal), and paint insulation with two coats of exterior grade latex where insulation is exposed to sunlight.

2.6 CONDENSATE DRAIN

A. Condensate drain piping shall be connected to the equipment and shall be hard drawn Type "K" copper. The complete condensate drain piping shall have a P-trap, and insulation consisting of 1/2" wall Armaflex, or approved equal. The P-trap shall have a wetted depth of a minimum of 3 inches. The drain at the unit shall be vented downstream of the P-Trap. Connect condensate drains to the drainage system. Condensate drain shall have a minimum of a 1" (one inch) gap above the sanitary sewer piping.

B. Horizontally installed units shall be provided with a drain pan, configured to capture all condensate overflows from the unit. Pan shall be fitted with a float switch to sense when the pan is half full, and shall be wired into the controls to disable the unit.

2.7 SECONDARY DRAIN

A. If the unit has a connection for a secondary or "overflow" drain, then the drain shall be connected to the primary drain. Drain piping shall be constructed with the same materials as the primary drain, installed with a minimum of 1/8 inch per foot slope, installed without a "P-trap," and connected to the primary condensate drain ahead ("upstream") of the primary drain P-trap.

2.8 OPERATING CONTROLS ("Thermostat")

A. Programmable Room Thermostat: Low voltage (24 volt AC) programmable thermostat cycles heat pump and furnace to maintain room temperature setting. Thermostat shall be rated for 2 stage cooling and 3 stages of heating. Thermostat shall also be equipped with a "FAN: On – Auto" switch which in the "auto" position, shall cause the fan to operate automatically with the heating and cooling cycles, and in the "on" position, the fan shall be "on" at all times. The thermostat shall be capable of controlling the room temperature

within 2 degrees of setpoint, except that in the second stage of heating, the temperature shall be maintained within 3 degrees of setpoint. The thermostat shall be capable of 4 settings per day, with each day of the week capable of individual programming. The thermostat shall automatically switch between heating and cooling, depending solely on whether the temperature in the building is above or below the programmed setpoint or "deadband" range. Thermostat shall be as manufactured by Johnson Controls Model #T500 HPP-1 or approved equal. An operating manual shall be supplied with each thermostat.

B. The "cool" setting shall enable the heat pump reversing valve in cooling mode and cycle the heat pump unit on and off to maintain the room temperature setting.

C. The "heat" setting shall enable the heat pump reversing valve in heating mode and cycle the heat pump on and off to maintain the room temperature setting.

D. A second stage of heating shall cycle furnace electric heat on and off if the heat pump is unable to satisfy heating demand.

PART 3 - EXECUTION

3.1 GENERAL

A. If refrigerant must be removed for any reason, Contractor shall capture refrigerant with a compressor package designed and manufactured for that purpose, and dispose of the refrigerant to a certified refrigerant recycling facility. Under no circumstances shall refrigerant be intentionally released directly to the atmosphere. All refrigerants shall be handled and stored as required by current federal, state and local standards, regulations and/or laws.

B. The installation of the complete system includes penetrations and modifications to the existing building.

C. The completed central heating and cooling system shall operate as specified and according to the standards, guidelines and regulations referenced.

D. Restore all damaged construction to an "as found" condition.

3.2 AIR CONDITIONER/FURNACE INSTALLATION

A. Install new air handlers, inside coils, drain piping, thermostats, outside units, refrigerant piping, and vapor and drain line insulation as specified. Connect equipment to ductwork and electrical supplies as necessary for a complete installation.

B. Install the air handlers in a manner to maximize the accessibility to the unit for maintenance, providing Manufacturer recommended clearances. The installation shall not limit or restrict access to the filter, nor to the unit controls. In the event that the installation is found to restrict access to features requiring regular or occasional maintenance, the Contractor shall correct the installation of the equipment to comply with the requirements of this specification.

C. Contractor shall install refrigerant piping, and charge unit. Charging unit consists of drawing a complete vacuum on the refrigerant containing system, including piping, and charging with new refrigerant. Care shall be taken in the installation of refrigerant to eliminate the discharge of refrigerant to the atmosphere. System shall be run and pressures checked to assure that system is properly charged.

D. The finished central heating and cooling system shall operate as specified and according to the standards, guidelines and regulations referenced.

3.3 OUTSIDE UNITS

A. Install outside units in locations indicated in Site Plan, and as recommended by Manufacturer. All recommended clearances shall be observed in the installation. Note that each unit shall be mounted on resilient vibration damping material, supported at all four corners.

3.4 THERMOSTAT INSTALLATION

A. Thermostats shall be mounted in the approximate location indicated in the drawings. Install each thermostat with a clear, locking, vandal proof guard. Provide operational manuals for thermostats as a part of the Manuals required for the closeout of the contract. The number of manuals provided shall equal the number of thermostats installed.

3.5 OPERATION AND MAINTENANCE

A. The final installation shall be complete and functional in every respect. The equipment shall perform as specified, and all features of every piece of equipment installed under this contract shall be accessible for operation and maintenance. In addition, the installation of the materials or equipment for this project shall provide access for all features for the operation and maintenance of related or adjacent equipment to the materials and equipment installed under this project. Contractor shall install all equipment and materials as specified so that all equipment is completely accessible for such maintenance and operation as changing filters, operating disconnect switches or breakers, inspecting and repairing controls, cleaning coils, etc.

END OF SECTION

SECTION 15810

DUCTWORK

PART 1 - GENERAL

1.1 WORK INCLUDES

A. Single wall rectangular duct

B. Flexible metal duct

C. Double wall spiral insulated round duct

1.2 RELATED WORK

A. Submit under provisions of Uniform General Conditions, Special Conditions, and Section 15050.

B. Section 15050 – Basic Mechanical Requirements

C. Section 15060 – Supports and Anchors

D. Section 15097 – Ductwork Insulation

1.3 REFERENCES

A. ASHRAE – Handbook of Fundamentals; Duct Design

B. ASHRAE – Handbook of Equipment; Duct Construction

C. ASTM A 90 – Weight of Coating on Zinc-Coated (Galvanized) Iron or Steel Articles

D. ASTM A 525 – General Requirements for Steel Sheet, Zinc-Coated (Galvanized) by the Hot-Dip Process

E. ASTM A 527 – Steel Sheet, Zinc-Coated (Galvanized) by Hot-Dip Process, Lock Forming Quality

F. NFPA 90A – Installation of Air Conditioning and Ventilating Systems

G. SMACNA – HVAC Duct Construction Standards

H. UL 181 – Factory-Made Air Ducts and Connectors

1.4 REFERENCES

A. Fundamentals Handbook, American Society of Heating, Refrigerating, and Air Conditioning Engineers (ASHRAE)

B. Equipment Handbook, ASHRAE

C. HVAC Duct Construction Standards, 1995, Sheet Metal and Air Conditioning Contractors National Association (SMACNA)

D. HVAC Duct System Design, 1990, SMACNA

E. Engineering Report No. 132 (Spacing of Duct Hangers), UMC

1.5 DEFINITIONS

A. Duct Sizes: Duct sizes indicated in the drawings or specifications are inside clear dimensions.

1.6 REGULATORY REQUIREMENTS

A. Construct ductwork to NFPA 90A, NFPA 90B and NFPA 96 standards.

B. All duct materials must be UL 181, Class 1 listed.

1.7 SUBMITTALS

A. Submit on double wall spiral insulated round duct, including fittings, hangers, insulation, and shop drawings. All submittal material shall be clearly marked.

PART 2 - PRODUCTS

2.1 DUCTWORK GENERAL

A. All ductwork indicated on the Drawings, specified or required for the air conditioning and ventilating systems shall be of materials as hereinafter specified unless indicated otherwise. All air distribution ductwork shall be fabricated, erected, supported, etc., as a minimum, in accordance with all applicable standards of SMACNA Duct Manuals where such standards do not conflict with NFPA 90A and where class of construction equals or exceeds that noted herein. Some aspects of this specification will exceed SMACNA and NFPA standards. All exhaust ductwork including toilet room exhausts shall be constructed as specified for a 2" W.G. System as described in SMACNA HVAC Duct Construction Standards unless a higher pressure requirement is noted on the drawings.

B. All ductwork shown on the Drawings, specified or required for the heating, ventilating and air conditioning systems shall be constructed and erected in a first class manner; level, vertical and parallel to building lines. The work shall be guaranteed for a period of

one (1) year from and after the date of acceptance of the job against noise, chatter, whistling, vibration, and free from pulsation under all conditions of operation. After the system is in operation, should these defects occur, they shall be corrected as directed by the Engineer.

2.2 SINGLE WALL RECTANGULAR DUCT

A. The minimum thickness of sheet metal used for ductwork construction shall be 24 gauge. Note that this does not refer to ductwork reinforcing materials. **This requirement is primary.**

B. Unless noted otherwise, fabricate low pressure metal duct from galvanized steel sheet having a zinc coating of 1.25 oz per sq ft for each side in accordance with ASTM A90 and conforming to ASTM A653 and A924 Standards. For rectangular ducts utilize drive slip or hemmed "S" slip joints. For round duct use crimp and bead joints.

C. All ductwork shown in the drawings is considered low pressure ductwork and as a minimum shall conform to the requirements for a 2" W.G. System as described in SMACNA HVAC Duct Construction Standards, Second Edition, published in 1995, with addenda, unless a higher pressure requirement is noted on the drawings.

D. In all rectangular supply, return and exhaust ducts, and all other ducts noted on the drawings, changes of direction shall be made using turns of 45° or less, or 90°. No other angle of turn is allowed. All rectangular, non-radius elbows of 90º shall have turning vanes as detailed in Specification Section 15820 – Ductwork Accessories. Duct turns greater than 90º are not allowed. Elbows of 90° may be radius type, having a centerline radius of 1-1/2 times the duct diameter or width. Elbows in round ducts may be smooth radius as described above or 4-piece 90 degree elbows or 3-piece 45 degree elbows.

2.3 FLEXIBLE METAL DUCT

A. Flexible duct ("flex duct"), if used, shall be flexible metal duct and shall be Flexmaster Type TL-V, or approved equal. Flex duct shall be constructed internally of aluminum metal flexible ducting, factory insulated with fiberglass blanket to an R=8.0, and protected with a fire retardant polyethylene outer jacket and vapor barrier. Maximum thermal conductance shall be 0.23 or less. The aluminum duct shall be secured and sealed to the adjoining sheet metal duct using sheet metal screws and duct sealant. All materials shall be installed as recommended by Manufacturer. The material, as installed, shall be limited to a maximum flame and smoke spread rating of 25/50. Flex duct shall be rated at a minimum of 12" w.g. positive pressure, and 8" w.g. negative pressure, without deformation or collapse.

B. Flex duct runs are limited to 5 feet in length unless noted otherwise on the drawings. Minimum flex duct size is 8" nominal.

C. If flexible metal duct is connecting to double wall spiral insulated round duct a insulation stop fitting shall be installed to transition from double wall to single wall.

D. Install per Manufacturer recommendations mechanically securing the connection to the duct and diffuser by installing sheet metal screws. Screws around the circumference of the duct, use at least three #8 sheet metal screws. If larger than 12” use at least five #8 sheet metal screws.

E. Apply duct sealant around the perimeter of the duct section joint and all sheet metal screws at all joints.

F. Allow at least 48 hours for sealant to cure before pressure testing for leaks

G. Secure insulation joints using staples, tape with 4" wide fiberglass tape embedded in Foster 30-35 white vapor barrier Emulsion and covered with Foster 30-35 white vapor barrier Emulsion until the tape is completely covered. If the project is an existing building retrofit project contractor shall seal insulation joints with foil backed tape with woven string stapled in at least two places per side, in lieu of fiberglass fabricated cloth with mastic.

2.4 DOUBLE WALL SPIRAL INSULATED ROUND DUCT

A. McGill Airflow L.L.C. factory manufactured double wall galvanized solid sheet metal with spiral lock seam construction interlocking helical seam that runs the length of the duct’s outer pressure shell, "acousti-k27" with a galvanized 28 gauge sheet metal perforated inner liner with a 1” layer of insulation sandwiched between with a maximum thermal conductance of 0.27 Btu/hr/SQFT/°F., or approved equal. Pressure classification for ductwork is +4 inches of water column. Galvanized steel sheet having a zinc coating of 1.25 oz per sq ft in accordance with ASTM A90 and conforming to ASTM A653 and A924 Standards.

B. All ductwork with an outer shell dimension 24” and larger shall have a McGill Airflow Uniflange, Butyl rubber gasketing connections with starter holes for sheet metal fasteners. All ductwork smaller than 24” shall be connected with a designed double wall slip coupling and/or fitting collar with extended inner collars. Insulation shall be mated at every connection.

C. All ductwork shown in the drawings shall conform to the requirements for 4” W.G. System as described in SMACNA HVAC Duct Construction Standards unless a higher pressure requirement is noted on the drawings.

D. All transitions from double wall to single wall shall consist of a transition fitting with a insulation stop.

E. The metal gauges listed in the 1995 SMACNA HVAC Duct Construction Standards for a 4” W.G. System are the minimum which shall be used for this project, see table below. It shall be noted that the Contractor is responsible that the metal gauge selected is heavy enough to withstand the physical abuse of the installation.

Max. Dia. Outer shell Duct Size	Spiral Seam Duct. US Standard Gauge	Fittings US Standard Gauge
Up to 12”	28	26
14”- 16”	26	24
18”	24	24
19” – 26”	24	22
27” – 36”	22	20

PART 3 - EXECUTION

3.1 INSTALLATION FOR SINGLE WALL RECTANGULAR DUCT

A. Refer also to requirements included in Part 2 of this specification.

B. Locate ducts with sufficient space around equipment to allow normal operating and maintenance activities.

C. Joints in round ducts shall be crimp and bead type with a minimum of three sheet metal screws and no more than 15” between screws. Joints in sectional elbows shall be sealed as specified for duct sealing.

3.2 INSTALLATION FOR DOUBLE WALL SPIRAL INSULATED ROUND DUCT

A. Slip-Joint Connection Procedure
1. Install per Manufacturer recommendations mechanically securing the connection by installing sheet metal screws through the outer shell of the duct size part of the connection, ½” from the stop bead. Screws shall be spaced no more than 15 inches apart around the circumference of the duct , use at least three screws for ducts 14 inches and smaller.
2. Apply duct sealant around the perimeter of the outer pressure shell of the exposed section joint and all sheet metal screws at all joints.
3. Allow at least 48 hours for sealant to cure before pressure testing for leaks.

B. Flanged-joint connection procedure
1. Install per Manufacturer recommendations using a #10 self tapping sheet metal screws on 10 in. on center.
2. Apply duct sealant around the perimeter of the outer pressure shell and flange covering all sheet metal screws. The butyl gasket material makes the joint seal.
3. Allow at least 48 hours for sealant to cure before pressure testing for leaks.

3.3 DUCT SUPPORTS FOR SINGLE WALL RECTANGULAR DUCT

A. As a minimum, all horizontal ducts shall be supported by means of 1" x No. 18 U.S. gauge galvanized steel band hangers attached to the ducts by means of screws, rivets, or clamps and fastened to roof and/or ceiling structural members with toggle bolts, beam clamps or other approved means. **Supports SHALL NOT be attached to underside of roof deck.** Ducts also may be supported by 3/8" threaded galvanized rod with galvanized Unistrut type channel in a trapeze configuration. Duct shall have at least one pair of supports at 8'-0" on centers. Clamps shall be used to fasten hangers to reinforcing on sealed ducts. Perforated strap material ("Plumber's Tape") shall not be used to support ducts. Brace all ductwork and equipment to prevent lateral movement under operation.

3.4 DUCT SUPPORTS FOR DOUBLE WALL SPIRAL INSULATED ROUND DUCT

A. As a minimum, all horizontal ducts shall be supported by means of 1" x No. 18 U.S. gauge galvanized steel band hanger on slip joint fittings and single- strap hanger or double-strap hanger on Van Stone Connections attached to the ducts by means of screws, rivets, or clamps and fastened to roof and/or ceiling structural members with toggle bolts, beam clamps or other approved means. **Supports SHALL NOT be attached to underside of roof deck.** . Duct shall have at least one pair of supports at 12'-0" on centers. Clamps shall be used to fasten hangers to reinforcing on sealed ducts. Perforated strap material ("Plumber's Tape") shall not be used to support ducts. Brace all ductwork and equipment to prevent lateral movement under operation.

3.5 DUCT SEALING FOR SINGLE WALL RECTANGULAR DUCT

A. All transverse and longitudinal seams, joints and duct penetrations shall be sealed. Sealant is to be non-hardening, latex based mastic, water resistant, fire resistive and compatible with mating materials. **SOLVENT BASED DUCT SEALANTS ARE PROHIBITED**. Ducts shall be sealed to SMACNA Seal Class "C" McGill Airflow product United Duct Sealer Water Base or better. Any obvious, detectable leakage in longitudinal seams shall also be sealed. Other recommendations for the installation of ducts and use of sealants are required as a minimum standard. These specifications shall prevail if they require a better quality installation.

3.6 DUCT SEALING FOR DOUBLE WALL SPIRAL INSULATED ROUND DUCT

A. All transverse and longitudinal seams, joints and duct penetrations shall be sealed. Sealant is to be non-hardening, latex based mastic, water resistant, fire resistive and compatible with mating materials. **SOLVENT BASED DUCT SEALANTS ARE PROHIBITED**. Ducts shall be sealed to SMACNA Seal Class "A" McGill Airflow product United Duct Sealer Water Base or better. Any obvious, detectable leakage in longitudinal seams shall also be sealed. Other recommendations for the installation of ducts and use of sealants are required as a minimum standard. These specifications shall prevail if they require a better quality installation.

3.7 TESTING FOR ALL DUCT

A. Leakage testing of the ductwork installed under this specification is not required. However Contractor shall perform minimal “testing” by examining all ductwork for leaks by listening and feeling the ductwork while in service, and examining the insulated ductwork for evidence of leaking such as "ballooning" of insulation.

3.8 CLEANING OF SYSTEMS

A. Prior to Substantial Completion, all ducts shall be cleaned of all dust and dirt, and construction debris, if any, that has collected in the ducts. This may include, and shall not be limited to, swabbing ductwork that has collected dirt and dust.

END OF SECTION

SECTION 15820

DUCTWORK ACCESSORIES

PART 1 - GENERAL

1.1 WORK INCLUDES

A. Air turning devices

B. Volume control (balancing) and splitter dampers

C. Flexible duct connections

D. Fan screens

E. Duct access doors

F. Test openings

G. Round, low pressure duct taps

1.2 RELATED WORK

A. Section 15767 – Heat Pump Air Conditioning Systems

1.3 REFERENCES

A. AFBMA 9 – Load Ratings and Fatigue Life for Ball Bearings

B. AFBMA 11 – Load Ratings and Fatigue Life for Roller Bearings

C. AMCA 99 – Standards Handbook

D. AMCA 210 – Laboratory Methods of Testing Fans for Rating Purposes

E. NFPA 90A – Installation of Air Conditioning and Ventilating Systems

F. NFPA 92A (National Fire Protection Association) – Smoke Control Systems

G. SMACNA – Low Pressure Duct Construction Standards

H. UL 33 (Underwriters Laboratories, Inc.) – Heat Responsive Links for Fire-Protection Service

I. UL 181 – Factory-Made Air Ducts and Connectors

J. UL 555 (Underwriters Laboratories, Inc.) – Fire Dampers and Ceiling Dampers

1.4 SUBMITTALS

A. Submit shop drawings and product data under provisions of Section 15050.

B. Provide shop drawings for shop fabricated assemblies indicated, including volume control dampers duct access doors duct test holes. Provide product data for hardware used.

C. Product Data: Submittal data shall include the following:
1. Air turning devices
2. Volume control (balancing) dampers
3. Flexible duct connections
4. Duct access doors
5. Flexible connections
6. Test openings
7. Round, low pressure duct taps
8. Manufacturer's Installation Instructions

1.5 OPERATION AND MAINTENANCE DATA

A. Submit under provisions of Section 15050.

B. Maintenance Data: Include instructions for lubrication, motor and drive replacement, spare parts list, and wiring diagrams.

1.6 DELIVERY, STORAGE, AND HANDLING

A. Deliver, store, protect and handle products to site under provisions of Section 15050.

B. Protect motors, shafts, and bearings from weather and construction dust.

PART 2 - PRODUCTS

2.1 AIR TURNING DEVICES

A. Manufacturers:
1. Aero Dyne
2. Anemostat
3. Barber-Coleman
4. Hart & Cooley
5. Or approved equal

B. Construct turning vanes and runners for rectangular elbows in accordance with SMACNA HVAC Duct Construction Standards, Fig. 2-3, with no trailing edge. Turning vanes shall be single wall, constructed of 24 gage sheet metal, shall be 2" radius, and shall be spaced 1 ½" on center. Turning vanes shall be installed per Figure 2-4, in the same Standard. Note that all rectangular 90° turns shall not change dimension in the turn, so turning vanes shall be constructed and installed for symmetrical 90° turns.

2.2 VOLUME CONTROL (BALANCING) AND SPLITTER DAMPERS

A. Furnish and install dampers where shown on the Drawings and wherever necessary for complete control of the air flow, including all supply, return and exhaust branches, "division" in main supply, return and exhaust ducts, each individual air supply outlet and fresh air ducts. Where access to dampers through a fixed suspended ceiling is necessary, the Contractor shall be responsible for the proper location of access doors.

B. Splitter dampers shall be fabricated of steel not lighter than 16 gauge. The leading edge of the damper shall be hemmed. Each splitter shall be a minimum of 12" long or 1-1/2 times the width of the smaller of the two branches it controls, whichever is greater. Dampers shall be carefully fitted, and shall be controlled by locking quadrants equal to Ventlok (Ventfabrics Corporation) No. 555 on exposed uninsulated ductwork, No. 641 on exposed externally insulated ductwork and No. 677 (2-5/8" diameter) chromium plated cover plate for concealed ductwork not above lay-in accessible ceilings. Furnish and install end bearings for the damper rods on the end opposite the quadrant when No. 555 or No. 641 regulators are used, and on both ends when No. 677 regulators are used.

C. On concealed ductwork above lay-in accessible ceilings use Ventlok No. 555 or No. 641 locking quadrant for splitter dampers.

D. Dampers larger than three (3) square feet in area shall be controlled by means of rods hinged near the leading edge of the damper with provisions for firmly anchoring the rod and with end bearings supporting the axle.

E. Volume dampers shall be equal to Ruskin MD15/MDRS25 or Greenheck MBD/MBDR. Dampers shall be pre-manufactured and assembled, not shop fabricated. Blades shall not exceed 48 inches (48") in length or twelve inches (12") in width and shall be of the opposed interlocking type. The blades shall be of not less than No. 16 gauge galvanized steel supported on one-half inch (1/2") diameter rust-proofed axles. Axle bearings shall be the self-lubricating ferrule type.

F. All adjustable dampers installed in externally insulated ductwork shall be installed with Ventlok No. 639, or equal, elevated dial operators. Insulation shall extend under the elevated dial and shall be sealed in place. All adjustable dampers installed in internally insulated ductwork shall be installed with Ventlok No. 635, or equal, dial operators. All damper shaft end penetrations in the ductwork shall be installed with Ventlok #607 end bearings.

2.3 FLEXIBLE DUCT CONNECTIONS

A. Where ducts connect to fans, including roof exhausters, flexible connections shall be made using "Ventglas" fabric that is fire-resistant, waterproof, mildew resistant and practically air tight, and shall weigh approximately thirty ounces (30 oz.) per square yard. There shall be a minimum of one-half inch (1/2") slack in the connections, and a minimum of two and one-half inches (2½") distance between the edges of the ducts except that there shall also be a minimum of one inch (1") of slack for each inch of static pressure on the fan system. This does not apply to Air Handling Units with internal isolation.

2.4 FAN SCREENS

A. Furnish and install screens on all duct, fan, etc., openings furnished by this Contractor which lead to, or are, outdoors. Screens shall be No. 16 gauge, one-half inch (1/2") mesh in a removable galvanized steel frame. Provide safety screens meeting OSHA requirements for protection of maintenance personnel on all fan inlets and fan outlets to which no ductwork is connected.

2.5 TEST OPENINGS

A. Furnish and install in the return air duct and in the discharge duct of each fan unit Ventlok No. 699 instrument test holes. The test holes shall be installed in locations as required to measure pressure drops across each item in the system, e.g., OA louvers, filters, fans, coils, intermediate points in duct runs, etc.

2.6 ROUND, LOW PRESSURE TAPS (Conical Bell Mouth Fittings)

A. Conical fittings may be used for duct taps and shall include quadrant dampers on all lines to air devices (diffusers and grilles) even though a volume damper is specified for the air device. (This does not apply to medium pressure duct.) Spin-in fittings shall be sealed at the duct tap with a gasket, or compression fit, or sealed with sealant specified for medium pressure ductwork. The location of spin-in fittings in the ducts shall be determined after dual or single duct terminal units are hung or the location of the light fixtures is known so as to minimize flexible duct lengths and sharp bends.

B. The conical fitting shall be made of at least 26 gage galvanized sheet metal. The construction to be a two-piece fitting with a minimum overall length of 6 inches and shall be factory sealed for high pressure requirements. Average loss coefficient for sizes 6, 8, and 10 shall be less than 0.055.

C. Each shall be provided with minimum 24 gage damper plate with locking quadrant operator and sealed end bearings. Damper blade shall be securely attached to shaft to prevent damper from rotating around shaft.

D. Provide flange and gasket with adhesive peel-back paper for ease of application. The fitting shall be further secured by sheet metal screws spaced evenly at no more than 4 inches on-center with a minimum of four screws per fitting.

E. The conical bellmouth fitting shall be Series 3000G as manufactured by Flexmaster U.S.A., Inc., Buckley Air Products, Inc., 'AIR-TITE', or approved equal.

PART 3 - EXECUTION

3.1 EXAMINATION

A. Verify ducts and equipment installations are ready for accessories.

3.2 INSTALLATION

A. Install turning vanes in all rectangular, mitered elbows in accordance with SMACNA standards and/or Manufacturer's recommendations.

B. Install equipment and accessories in accordance with Manufacturer's instructions.

C. Provide volume balancing dampers at points on low pressure supply, return, and exhaust systems where branches are taken from larger ducts as required for air balancing. Use splitter dampers only where indicated.

D. Provide duct test holes where indicated and where required for testing and balancing purposes. Refer also to Section 15950.

END OF SECTION

SECTION 15830

FANS

PART 1 - GENERAL

1.1 SECTION INCLUDES

A. Ceiling exhaust fans

B. Inline cabinet exhaust fans

C. Wall and roof mounted centrifugal exhaust fans

1.2 RELATED WORK

A. Section 15050 – Basic Mechanical Requirements

B. S Section 15767 – Heat Pump Air Conditioning Systems(ductwork)

C. Section 15820 – Ductwork Accessories

D. Division 16 – Electrical

1.3 REFERENCES

A. AFBMA 9 – Load Ratings and Fatigue Life for Ball Bearings

B. AFMBA 11 – Load Ratings and Fatigue Life for Roller Bearings

C. AMCA 99 – Standards Handbook

D. AMCA 210 – Laboratory Methods of Testing Fans for Rating Purposes

E. AMCA 261 – Directory of Products Licensed to Bear the AMCA Certified Ratings Seal

F. AMCA 300 – Test Code for Sound Rating Air Moving Devices

G. AMCA 301 – Method of Publishing Sound Ratings for Air Moving Devices

H. NFPA 70 – National Electrical Code

I. NFPA 96 – Installation of Equipment for the Removal of Smoke and Grease Vapors from Commercial Cooking Equipment

J. SMACNA – HVAC Duct Construction Standards – Metal and Flexible

K. UL 705 – Power Ventilators

1.4 SUBMITTALS

A. Submittals must follow the provisions of the Uniform General Conditions, Special Conditions and Section 15050 of these specifications.

B. Product Data: Provide data on fans and accessories including sound power levels at rated capacity, and electrical characteristics and connection requirements.

C. Provide complete Manufacturer's Installation Instructions.

1.5 OPERATION AND MAINTENANCE DATA

A. Submit under provisions of the Uniform General Conditions, Special Conditions and Section 15050.

B. Maintenance Data: Include instructions for lubrication, motor and drive replacement, spare parts list, and wiring diagrams.

1.6 DELIVERY, STORAGE, AND HANDLING

A. Deliver, store, protect and handle products to site under provisions of the Uniform General Conditions, Special Conditions and Section 15050.

B. Protect motors, shafts, and bearings from weather and construction dust.

PART 2 - PRODUCTS

2.1 MANUFACTURERS

A. Ceiling Mounted Fans and Systems:
1. Dayton
2. Broan
3. Car-Mon
4. Cook
5. Greenheck
6. Approved equal of capacities and types as scheduled
7. Equivalent fans selections shall not increase motor horsepower (amperage), or increase noise level from that specified.

B. Inline Cabinet Fans:
1. Greenheck
2. Chicago Blower
3. Acme
4. Cook
5. or approved equal

C. Wall and Roof Mounted Centrifugal Exhaust Fans:
1. Greenheck

2. Chicago Blower
3. Buffalo Forge
4. Woods
5. Cook
6. Approved equal

2.2 CEILING MOUNTED EXHAUST FANS

A. Direct drive centrifugal forward curved wheel in steel housing.

B. Resiliently mounted lifetime lubricated plug-in motor.

C. Matte white polymeric grille with torsion spring mounting.

D. Polymeric duct connection collar and backdraft shutter.

E. Provide optional wall cap where indicated on drawings.

F. Provide disconnect switch option for all fans and motor overload option for all fractional horsepower fans.

2.3 INLINE CABINET FANS

A. Performance Ratings: Conform to AMCA 210 and/or bear the AMCA Certified Rating Seal.

B. Fabrication: Corrosion resistant galvanized steel housing, lined with 1/2” sound absorbing fiberglass insulation. Outlet duct shall be complete with integral aluminum backdraft damper. Fan shall be configured for horizontal inlet and outlet connections.

C. Static and Dynamic Balance: Eliminate vibration or noise transmission to occupied areas.

D. Fan shall be forward curved, direct drive inline cabinet fan, conforming to the scheduled capacity requirements.

E. Motors shall have automatic reset thermal overload protection, and shall be mounted on vibration isolators. Motor shall be compatible for use with speed controls.

F. Cover shall be easily removable for access to motor.

G. Accessories: Provide factory installed disconnecting means.

2.4 WALL AND ROOF MOUNTED CENTRIFUGAL EXHAUST FANS

A. General:
1. All fans shall be backward inclined, or airfoil type. Radial and forward inclined fans are not acceptable.

2. Performance Ratings: Conform to AMCA 210 and bear the AMCA Certified Rating Seal.
3. Sound Ratings: AMCA 301, tested to AMCA 300, and bear AMCA Certified Sound Rating Seal.
4. Fabrication: Conform to AMCA 99.
5. Performance Base: 1000 feet above sea level conditions.
6. Temperature Limit: Maximum 600°F (unless noted otherwise).
7. Static and Dynamic Balance: Eliminate vibration or noise transmission to occupied areas.
8. Grease lubricated and sealed bearings shall be selected for a minimum average life in excess of B-10, minimum life 50,000 hours at maximum catalogued operating conditions. Grease fittings shall be accessible without the disassembly of any part of the fan, or the removal of panels or shrouds. In the event that a grease fitting is inherently inaccessible, the fitting shall be extended to an accessible location using stainless steel tubing. The tubing shall contain at least one full strain relief loop of a minimum diameter of 4 inches.
9. Capacity ratings shall be based on tests performed in accordance with AMCA Standard 210. Each fan shall carry near the unit nameplate the AMCA seal indicating that capacity ratings are certified.
10. Housings for all fans shall be spun aluminum and shall have a mounting ring or frame to provide for mounting of fan.
11. Fan wheels shall be aluminum, non-overloading, centrifugal, backward-inclined or airfoil, with aluminum rub ring.
12. Accessories shall include a gravity backdraft damper, and ¼" mesh screen. Damper shall be installed on damper trays so as to not have their operation obstructed by the fan.

B. Wall mounted centrifugal exhaust fans:
1. All surfaces exposed to airflow shall have a Heresite or baked phenolic coating.
2. Fans shall have an explosion proof or intrinsically safe, disconnect switch and vibration isolation for entire motor and drive assembly. Motor shall be explosion proof or TEFC, 115 VAC, 60 cycle, single phase, with thermal overloads, unless specifically stated otherwise in equipment schedule in drawings.

PART 3 - EXECUTION

3.1 INSTALLATION

A. Install in accordance with Manufacturer's instructions.

B. Do not operate fans for any purpose until ductwork is clean, filters in place, bearings lubricated, and fan has been test run under observation.

C. Install exhaust fans and their attendant ductwork at locations indicated on drawings. Refer to Architectural plans for additional requirements.

D. Fans shall be operated as indicated on drawings. Refer to Electrical Plans and Specifications.

END OF SECTION

SECTION 15850

AIR OUTLETS AND INLETS

PART 1 - GENERAL

1.1 WORK INCLUDES

A. Diffusers

B. Registers/Grilles

1.2 RELATED WORK

A. Section 15050 – Basic Mechanical Requirements

B. Section 15097 – Ductwork Insulation

C. Section 15767 – Heat Pump Air Conditioning Systems

D. Section 15810 – Ductwork

E. Section 15820 – Ductwork Accessories

1.3 REFERENCES

A. ADC 1062 – Certification, Rating and Test Manual

B. AMCA 500 – Test Method for Louvers, Dampers and Shutters

C. ANSI/NFPA 90A – Installation of Air Conditioning and Ventilating Systems

D. ARI 650 – Air Outlets and Inlets

E. ASHRAE 70 – Method of Testing for Rating the Air Flow Performance of Outlets and Inlets

F. SMACNA – Low Pressure Duct Construction Standard

G. Uniform Mechanical Code, latest edition

1.4 QUALITY ASSURANCE

A. Test and rate performance of air outlets and inlets in accordance with ADC Equipment Test Code 1062 and ASHRAE 70.

B. Test and rate performance of louvers in accordance with AMCA 500.

1.5 REGULATORY REQUIREMENTS

A. Conform to ANSI/NFPA 90A and UMC.

1.6 SUBMITTALS

A. Submit product data and Manufacturers installation instructions for all diffusers, grilles and registers under provisions of Uniform General Conditions, Special Conditions, and Section 15050.

B. Provide product data for items required for this project.

C. Submit schedule of outlets and inlets indicating type, size, location, application, and noise level.

D. Review requirements of outlets and inlets as to size, finish, and type of mounting prior to submitting product data and schedules of outlets and inlets.

PART 2 - PRODUCTS

2.1 AIR SUPPLIES AND RETURNS

A. Grilles, registers and ceiling outlets shall be as scheduled on the Drawings and shall be provided with sponge rubber or soft felt gaskets. If a Manufacturer other than the one scheduled is used, the sizes shown on the Drawings shall be checked for performance, noise level, face velocity, throw, pressure drop, etc., before the submittal is made. Selections shall meet the Manufacturer's own published data for the above performance criteria. The throw shall be such that the velocity at the end of the throw in the five foot occupancy zone shall neither be more than 50 FPM nor less than 25 FPM. Noise levels shall not exceed those published in the ASHRAE Guide for the type of space being served (NC level).

B. Locations of outlets on Drawings are approximate and shall be coordinated with other trades to make symmetrical patterns and shall be governed by the established pattern of the lighting fixtures or architectural reflected ceiling plan. Where called for on the schedules, the grilles, registers and ceiling outlets shall be provided with deflecting devices and manual damper. These shall be the standard product of the Manufacturer, subject to review by the Architect, and equal to brand scheduled.

2.2 ACCEPTABLE MANUFACTURERS – DIFFUSERS, GRILLES AND REGISTERS

A. Price

B. Metal*Aire

C. Titus

D. Krueger

E. Approved equal.

2.3 RECTANGULAR CEILING DIFFUSERS

A. Rectangular, extruded aluminum, all aluminum construction, multicore type diffuser to discharge air in either a four-way, 360 degree pattern, or a 3-way, 270 degree pattern with sectorizing baffles where indicated. Refer to schedule in construction drawings.

B. Provide inverted T-bar type installation frame, or in plaster ceilings, provide plaster frame and ceiling frame, as indicated in the diffuser schedule in the drawings.

C. Fabricate of aluminum with standard baked enamel off-white finish.

2.4 RECTANGULAR AIR RETURN GRILLE

A. Rectangular, aluminum, “egg-crate” design, for return of air to air handler. Refer to equipment schedule in drawings.

B. Fabricate with Manufacturer’s standard finish.

PART 3 - EXECUTION

3.1 INSTALLATION

A. Install items in accordance with Manufacturers' instructions.

B. Check location of outlets and inlets and make necessary adjustments in position to conform to architectural features, symmetry, and lighting arrangement.

C. Provide back draft dampers on gravity relief vent as specified.

D. Install diffusers to ductwork with air tight connection. Refer to equipment specifications.

E. Provide balancing dampers on duct take-off to diffusers, and grilles and registers, regardless of whether dampers are specified as part of the diffuser, or grille and register assembly.

F. Paint ductwork visible behind air outlets and inlets matte black.

G. All air supply devices shall be insulated on their topsides with blanket type insulation equal to the insulation used for insulating ductwork. See specifications for ductwork insulation.

END OF SECTION

SECTION 15950

TESTING, ADJUSTING AND BALANCING

PART 1 - GENERAL

1.1 SECTION INCLUDES

A. Testing, adjustment, and balancing of air systems

B. Measurement of final operating condition of HVAC systems

C. Sound measurement of equipment operating conditions

D. Vibration measurement of equipment operating conditions

1.2 RELATED SECTIONS

A. Section 15050 – Basic Mechanical Requirements

B. Section 15767 – Heat Pump Air Conditioning Systems

C. Section 15810 – Ductwork

D. Section 15820 – Ductwork Accessories

E. Section 15850 – Air Outlets and Inlets

1.3 REFERENCES

A. AABC – National Standards for Field Measurement and Instrumentation, Total System Balance

B. ASHRAE – Systems Handbook: Testing, Adjusting and Balancing

C. NEBB – Procedural Standards for Testing, Balancing and Adjusting of Environmental Systems

1.4 CONTRACTOR'S SCOPE OF WORK

A. Testing, adjusting, and balancing (TAB) of the air conditioning systems and related ancillary equipment shall be performed by an impartial, technically qualified TAB firm, with no connection to the Contractor or any Subcontractor, except for a contract to perform the work described herein. The preparation for, and corrections necessary for the Testing, Adjusting and Balancing of these systems, as described herein, are the responsibility of the Contractor.

B. As a part of this Construction Contract, the Contractor shall provide for a maximum of two changes or replacements to the sheaves, belts, dampers, valves, etc. required for correct air balance as advised by the TAB firm, at no additional cost to the Owner.

C. The Contractor shall provide and coordinate the services of qualified, responsible Subcontractors, suppliers and personnel as required to correct, repair, and/or replace any and all deficient items or conditions found during the course of this project, including the testing, adjusting and balancing period.

D. In order that all systems may be properly tested, balanced, and adjusted as specified herein, the Contractor shall operate said systems at his expense for the length of time necessary to properly verify their completion and readiness for TAB. This length of time shall be subject to the approval of the Construction Inspector.

E. Project Contract completion schedules shall allow for sufficient time to permit the completion of TAB services prior to Owner occupancy. The contractor shall allow no less than three weeks for the testing and balancing activities of the owner provided services, during the construction period, and prior to Substantial Completion as defined in the Uniform General Conditions of this Construction Document. Note that this period may be concurrent with other construction activities which shall not conflict with the TAB of the systems described herein.

F. The Drawings and Specifications indicate valves, dampers, and miscellaneous adjustment devices for the purpose of adjustment to obtain optimum operating conditions, and it will be the responsibility of the Contractor to install these devices in a manner that will leave them accessible and readily adjustable. Should any such device not be readily accessible, the Contractor shall provide access as required for successful completion of the TAB. Also, any malfunction encountered by TAB personnel and reported to the Contractor or the Construction Inspector shall be corrected by the Contractor immediately.

1.5 RESPONSIBILITIES OF THE PROJECT CONTRACTOR

A. The Contractor shall:
   1. Have the building and air conditioning systems in complete operational readiness prior to the beginning of TAB work.
   2. Allow sufficient time for the TAB firm to perform the contracted TAB work within the construction schedule.
   3. Promptly correct deficiencies of materials and workmanship identified as delaying completion of TAB work.
   4. Complete operational readiness of the building requires that construction status of the building shall permit the closing of doors, windows, ceilings installed, etc., to obtain simulated or projected operating conditions.
   5. Complete operational readiness of the air conditioning systems also requires that the following be accomplished:
      a. Air Distribution Systems:

1) Verify installation for conformity to design. All supply, return and exhaust ducts terminated and pressure tested for leakage as required by the Specifications.
2) All control dampers, and volume balancing dampers, shall be properly installed and functional. Dampers serving requirements of minimum and maximum outside, return and relief air shall provide tight closure and full opening, smooth and free operation.
3) All supply, return, and exhaust grilles, registers, diffusers shall be installed and operating properly.
4) Air handling systems, units and associated apparatus, such as heating and cooling coils, filter sections, access doors, etc., shall be sealed as specified in the equipment specifications to eliminate excessive bypass or leakage of air.
5) All fans (supply, return and exhaust) included in the project shall be operating and verified for freedom from vibration, proper fan rotation and belt tension; heater elements in motor starters of proper size and rating; record motor amperage and voltage on each phase at startup and running, and verify they do not exceed nameplate ratings.

b. Automatic Controls:
1) Verify that all control components are installed in accordance with project requirements and are functional, including all electrical interlocks, damper sequences, air resets, fire and freeze stats, high and low temperature thermostats, and duct mounted smoke detectors.
2) All controlling instruments shall be calibrated and set for designed operating conditions.

c. Tabulated Data:
1) The motor amperages and voltages for the air handler fans indicated above shall be recorded showing "actual" and "nameplate" voltage and amperage. This also applies to each piece of electrically driven air conditioning equipment in the system including exhaust fans and other fans of fractional horsepower.

1.6 REQUISITES OF THE TAB FIRM

A. The Firm shall be neither attached to, nor affiliated with, except by contract, any other Contractor or Subcontractor associated with this project.

B. The Firm shall be one which is organized to provide professional services of this specified type in the State of Texas and as a minimum shall have a minimum of one (1) professional engineer licensed in the State of Texas, with current registration, to perform such professional services. This engineer shall be personally responsible for developing the job site data as required in the test procedures outlined in these Specifications.

Further, the engineer shall be on site during the collection of data and shall personally supervise all TAB technicians during balancing operations.

C. The principals of the firm, and the persons performing the TAB, shall be either NEBB or AABC certified.

D. The Firm shall have operated a minimum of five years under its current Firm name, and shall be in good standing with the State of Texas, Franchise Tax Board.

E. The Firm shall be capable of performing the services specified at the location of the facility described within the time specified, preparing and submitting the detailed report of the actual field work performed, and following up the basic work as may be required.

F. All personnel working on the job site shall be either professional engineers or engineering technicians, who shall have been permanent, full time employees of the firm for a minimum of six (6) months prior to the start of work for this specific project.

G. **The TAB Firm shall submit biographical data on the individual proposed to directly supervise the TAB work, as well as other personnel scheduled to perform the technical work under the contract.** It shall also submit a background record of at least five years of specialized experience in the field of air system balancing, and shall possess properly calibrated instrumentation. The supervisory personnel for the TAB firm shall be registered engineers in the mechanical field and all of the employees used in the TAB firm shall be permanent, full-time employees of the firm.

1.7 DOCUMENTS

A. The TAB firm shall, as a requirement of the TAB contract, arrange with the Contractor to compile one set of mechanical specifications, all pertinent change orders, and the following:
   1. One complete set of Drawings
   2. One set of mechanical floor plans of the conditioned spaces. These Drawings shall be ozalid type (blue or black on light background) reproductions to facilitate marking
   3. Approved submittal data on equipment installed, and related changes as required to accomplish the test procedures outlined in the following specifications

1.8 RESPONSIBILITIES OF THE TAB FIRM

A. Check, adjust, and balance the components of the air conditioning system which will result in optimal noise, temperature, and airflow conditions in the conditioned spaces of the building while the equipment of the system is operating economically. This is intended to be accomplished after the system components are installed and operating as provided for in the contract documents. It is the responsibility of the Mechanical Contractor to place the equipment into service.

B. Liaison and Early Inspection:
   1. Inspect the installation of mechanical piping systems, sheet metal work, temperature controls and other component parts of the heating, air conditioning and ventilating systems during the construction stage for the proper arrangement and adequate provisions of the systems for ease of testing and balancing.
   2. After completing this review during the construction stage, the TAB Firm shall provide the Construction Inspector with a list of sequential steps that TAB will follow in performing the balancing operation. (It is not intended that this procedural schedule be as detailed as the "Basic Procedures" outlined in the AABC Standards Manual, for example.) A list of the significant operations that will be performed in the balancing process shall be provided. The purpose is to provide the Owner with an outline of the steps that the TAB Firm will follow so that he may be aware of the progress being made. It is understood that, as the balancing progresses, the TAB Firm may find it necessary to deviate from the scope and order in which the steps are listed; however, in general it will be expected that the TAB Firm will follow the provided schedule.

C. During the balancing process, as abnormalities and malfunctions of equipment or components are discovered by the TAB personnel, the Construction Inspector shall be advised in writing so that the condition can be corrected by the Construction Contractor. The written document need not be formal, but must be understandable and legible. If corrected prior to the completion of the TAB, data from malfunctioning equipment shall not be reported in the final TAB report. If not corrected, then the TAB report shall be annotated with all abnormalities listed clearly.

D. The TAB Report:
   1. The activities described in this section shall culminate in a report to be provided in triplicate to the Owner or his designated representative. The intent of the final report is to provide a reference of actual operating conditions for the Owner's operating personnel.
   2. All measurements and recorded readings (of air, water, electricity, etc.) that appear in the reports shall have been made onsite by the permanently employed technicians or engineers of the firm.
   3. At the option of the Construction Inspector, all data sheets tabulated each day by TAB personnel shall be submitted for initial by the Construction Inspector. Those work sheets so initialed, or copies thereof, shall be presented as a supplement to the final TAB report.
   4. The report shall be certified and approved by the previously described professional engineer of the firm and an original signed and dated seal shall appear on the first page of each copy, in compliance with the Texas Engineers Practice Act. The report shall be recorded on standard forms approved by the Owner.
   5. The TAB Report shall include the following as a minimum:
      a. PREFACE: A general discussion of the system, any idiosyncrasies, and any problems encountered, an outline of normal ventilation cycles of operation, and any noise problem not corrected.

b. PITOT TUBE TRAVERSES: For use in future troubleshooting by maintenance personnel, all exhaust ducts, main supply ducts, fume hoods and return ducts shall have air velocity and volume measured and recorded by the traverse method. Locations of these traverse test stations shall be described on the sheet containing the data.

c. TEMPERATURE TABULATION: Temperatures shall be recorded for each conditioned space on a room-by-room basis. Record outside ambient temperature at two hour intervals. The total variation in conditioned space temperatures shall not exceed 2 degrees variance from the thermostat settings.

d. AIR VOLUMES & VELOCITIES: Air volumes and velocities shall be measured at each supply grille, return air grille, and exhaust air grille or air handling device. In all fan systems, the air quantities indicated on the plans may be varied as required to provide a maximum temperature variation of two (2) degrees within each separately controlled space, but the total air quantity indicated for each zone must be obtained. It shall be the obligation of the Contractor to furnish or revise fan drive and/or motors if necessary, without cost to the Owner, to attain the specified air volumes.

e. STATIC PRESSURE DROPS: Static pressure gains or losses shall be measured across each supply fan, cooling coil, heating coil, return air fan, air handling unit filter and exhaust fan. These readings shall be graphically compared to the specific fan curve.

f. STATIC PRESSURES: Static pressures shall be measured and recorded for this report at the furthest air device (e.g. terminal unit) from the air handler supplying that device.

g. FAN SPEEDS: The operating speed of each fan shall be measured in RPM.

h. DRAWINGS: The Drawings mentioned above under "Documents" shall have each set of zone dampers and supply air openings numbered and/or lettered to correspond to the numbers and letters used on the report data sheets so that data in the report can be correlated with each specific supply air opening in the building. If room numbers actually used in the building differ from those on the plans, the building room numbers shall be marked on these Drawings. Only one such marked-up set of Drawings need be provided with the three copies of the TAB report.

6. Before final acceptance of the TAB report, the report data, at the discretion of the Owner, shall be verified and demonstrated one time on the job site by the TAB firm in the presence of the Architect's, Engineer's and the Owner's representatives. Representatives of the testing firm doing the work shall be present and provide the necessary equipment for test data verification. The Owner shall notify the Contractor of the acceptance of the report after clarification of any questions on the data recorded therein. This acceptance will terminate all bond and insurance requirements of TAB firm. Final acceptance of the report will culminate in the payment of the full amount of the TAB contract.

7. In order to permit the Construction Contractor time to work off TAB deficiency lists, the air balance firm shall provide for additional progress inspection visits to the project site from the start of balancing operations until completion.
8. The firm shall be responsible for inspecting, adjusting, balancing, and logging the data on the performance of all fans, all dampers in the duct system, all air distribution devices, the flows of steam or water through all coils, and the power consumption of all motors. The Contractor, Mechanical Contractor, the various Subcontractors involved, and the Suppliers of the equipment installed shall all cooperate with balancing firm to provide all necessary data on the design and proper application of the systemic components and shall furnish all labor and material required to eliminate any deficiency in performance.
9. During the TAB work, the temperature regulation shall be adjusted for proper relationship between controlling instruments. The Owner (Inspector) shall be advised of any instruments out of calibration so that the Controls Contractor may recalibrate the equipment, using data supplied by the balancing firm. After recalibration, room temperatures shall be measured again as described in "Temperature Tabulation" paragraph.
10. An additional inspection is required approximately ninety (90) days after occupancy of the building. The TAB firm shall insure that satisfactory performance is being maintained throughout and satisfy any unusual conditions.
11. An additional inspection in the building shall be made by the Firm during the season opposite that in which the initial adjustments were made (summer or winter). At that time any necessary modifications to the initial adjustment required to produce optimum operation of the system components shall be made to produce the proper seasonal conditions in each conditioned space. At the time of opposite season checkout, the Owner's Construction Inspector or Facility Superintendent, or both, shall be given timely notification before any readings or adjustments are made so that they may participate in the checkout.

PART 2 – PRODUCTS (Not Used)

PART 3 - EXECUTION (Not Used)

END OF SECTION

SECTION 16010

BASIC ELECTRICAL REQUIREMENTS

PART 1 - GENERAL

1.1 RELATED SECTIONS

A. Section 15050 – Basic Mechanical Requirements

B. Section 15920 – HVAC Control Wiring

1.2 WORK INCLUDES

A. The Contractor shall install, complete and operating, electrical systems consisting of the following :

1. Complete distribution for power and lighting as shown on plans, including switches and circuit breakers, feeders, sub feeders, grounding, switchboards, transformers, generators, transfer switches, panelboards, branch circuits, line voltage control wiring, switches and receptacles, telecommunications equipment, and all other electrical or telecommunications equipment shown on drawings.
2. Contractor shall make all final connections to equipment furnished by other trades.
3. Contractor shall make all connections to all motors, electrically operated equipment and line voltage controls.
4. All conduits, sleeves and support systems required for all systems and all cable trays.
5. Temporary electrical power and lighting shall be furnished, installed and maintained for all trades. Building lighting may be used as construction lighting only after it is permanently installed.
6. Miscellaneous items obviously required for a complete and operating system but not specifically called for on the drawings or in the specifications shall be provided by the Contractor at no extra cost to the Owner (nuts and bolts, masonry anchors, conduit and equipment supports, drilling welding, scaffolding, crane service, etc.).

1.3 REFERENCES, STANDARDS, AND REGULATORY REQUIREMENTS: The following state and local codes, ordinances, and industry standards shall be complied with on this project as applicable:

A. The “Authority Having Jurisdiction” over the project described by these documents is the Owner, Texas Department of Transportation, as an Agency of the State of Texas. As such, it is required that the installation shall meet the minimum standards prescribed in the latest editions of the following listed codes and standards, which are made a part of these Specifications.

B. American National Standards Institute (ANSI): All current editions of applicable manuals and standards

C. Underwriters' Laboratories (UL)

D. Insulated Cable Engineers Association (ICEA)

E. Institute of Electrical and Electronic Engineers (IEEE)

F. American Society of Testing Materials (ASTM): All current editions of applicable manuals and standards.

G. National Fire Protection Association Standards (NFPA):
1. NFPA No. 70, National Electrical Code
2. NFPA No. 90A, Air Conditioning Systems
3. NFPA No. 91, Blower & Exhaust Systems
4. NFPA No. 101, Life Safety Code
5. NFPA No. 241, Standard for Safeguarding Construction, Alteration and Demolition Operations
6. NFPA No. 255, Method of Test of Surface Burning Characteristics of Building Materials
7. NFPA No. 258, Standard Research Test Method for Determining Smoke Generation of Solid Materials

H. National Electrical Manufacturers' Association (NEMA): All current editions of applicable manuals and standards.

I. Local Fire Department and the State Fire Marshall, as may be applicable to construction on this site

J. Occupational Safety and Health Act (OSHA): All applicable safety standards

K. Texas Occupational Safety Act: All applicable safety standards

L. International Building Code, latest edition

M. Refer to Specification Sections hereinafter bound for additional Codes and Standards

N. All materials and workmanship shall comply with all applicable state and national codes, Specifications, and industry standards. In all cases where Underwriters' Laboratories, Inc. has established standards for a particular type material, such material shall comply with these standards. Evidence of compliance shall be the UL "label" or "listing" under Re-Examination Service.

1.4 GENERAL MATERIALS AND EQUIPMENT REQUIREMENTS

A. Note that no asbestos-bearing, or solvent based, or lead containing materials shall be used on this project. If any prohibited materials are installed, all of the material, including the underlying material, shall be removed and disposed of as required by local, state, and federal requirements.

B. The Contractor shall be responsible for fitting the material and apparatus specified in this division into the building and shall carefully lay out the specified work at the site to conform with the structural conditions, to avoid all obstructions, to conform to the details of the installation and thereby to provide an integrated installation operating as a complete set of systems.

C. Verification of Dimensions: The Contractor shall be responsible for the coordination and proper relation of his work to the building structure and to the work of all trades. The Contractor shall visit the premises and become thoroughly familiarize with all details of the work and working conditions, to verify all dimensions in the field, and to advise the Design Engineer of any discrepancy before performing any work. Adjustments to the work required in order to facilitate a coordinated installation shall be made at no additional cost to the Owner or the Design Engineer.

D. The Electrical Drawings are necessarily diagrammatic by their nature, and are not intended to show every connection in detail or every pipe or conduit in its exact location. These details are subject to the requirements of standards referenced elsewhere in these specifications, and structural and architectural conditions. The Contractor shall carefully investigate structural and finish conditions and shall coordinate the separate trades in order to avoid interference between the various phases of work. Work shall be organized and laid out so that it will be concealed in furred chases and suspended ceilings, etc., in finished portions of the building, unless specifically noted to be exposed. All work shall be installed parallel or perpendicular to the lines of the building unless noted otherwise.

E. When the Drawings do not give exact details as to the elevation of conduit and cable trays, the Contractor shall physically arrange the systems to fit in the space available at the elevations intended with proper clearances. Exposed conduit and the cable tray systems are generally intended to be installed true and square to the building construction, and located as high as possible against the structure in a neat and workmanlike manner. The Drawings do not show all required offsets, and other location details. Work shall be concealed in all finished areas.

F. Storage at Site: The Contractor shall not receive material or equipment at the job site until there is suitable space provided to properly protect equipment from rust, drip, humidity, and dust damage.

G. Capacities shall be not less than those indicated but shall be such that no component or system becomes inoperative or is damaged because of startup or other overload conditions.

H. Conformance with Agency Requirements: Where materials or equipment are specified to be approved, listed, tested, or labeled by the Underwriters' Laboratories, Inc. (UL), the Contractor shall submit proof that the items furnished under this Section of the Specifications conform to such requirements. The label of the Underwriters Laboratories, Inc., applied to the item will be acceptable as sufficient evidence that the items conform to such requirements.

I. Nameplates: Each major component of equipment shall have the Manufacturer's name, address, and catalog number on a plate securely attached to the item of equipment. All

data on nameplates shall be legible at the time of Final Inspection. Under no circumstances shall any nameplate be painted over for any reason. If a new or existing nameplate is painted over, the nameplate shall be restored to as new condition, or replaced with a new nameplate provided by the Manufacturer.

J. Prevention of Rust: Standard factory finish will be acceptable on equipment specified by model number; otherwise, surfaces of ferrous metal shall be given a rust inhibiting coating. The treatment shall withstand 200 hours in salt spray fog test, in accordance with Method 6061 of Federal Standard No. 141. Immediately after completion of the test, the specimen shall show no signs of wrinkling or cracking and no signs of rust creepage beyond 1/8" on either side of the scratch mark. Where rust inhibitor coating is specified hereinafter, any treatment that will pass the above test is acceptable unless a specific coating is specified except that coal tar or asphalt type coating will not be acceptable unless so stated for a specific item. Where steel is specified to be hot-dip galvanized, mill-galvanized sheet steel may be used provided all raw edges are painted with a zinc-pigmented paint conforming to Military Specification MIL-P-26915.

1.5 DEFINITIONS (Note: These definitions are included here to clarify the direction and intention of this specification. The list given here is not by any means complete. For further clarification as required, Contractor shall contact the designated owner's representative.)

A. ARCHITECT (or DESIGN ARCHITECT): The "Architect" or "Design Architect" is defined as the architect whose seal appears on the construction specifications title page and on the drawings for the particular area under consideration.

B. AUTHORITY HAVING JURISDICTION: The Texas Department of Transportation, as an agency of the State of Texas is the "Authority Having Jurisdiction" in any matter of code assignment, interpretation, etc., as applies to this project. In many cases, at the Owners option, the Authority Having Jurisdiction may choose to apply the policies and procedures of an Authority not having jurisdiction, and as such, delegate its authority over some issues. In the event that some of its authority has been delegated to another Authority, such delegation will be specifically delineated in these specifications. In many instances the sections of the specifications will include references which will indicate codes, standards, and regulations which have bearing on the project, and will be enforced by the AUTHORITY HAVING JURISDICTION. The Owner may, at its option and at any time, defer to a local jurisdiction as the AUTHORITY HAVING JURISDICTION. This action, if taken, shall not subrogate any of the authority of the Owner, nor have any bearing on other unrelated requirements of these specifications.

C. CONCEALED: "Concealed" areas are those areas which cannot be seen by the building occupants, such as inside walls or above ceilings.

D. ENGINEER (or DESIGN ENGINEER or ENGINEER OF RECORD): The "Engineer" or "Design Engineer" or "Engineer of Record" is defined as the engineer whose seal appears on the construction specifications title page and on the drawings for the particular area under consideration. Note that in some cases, the work of two or more Engineers may appear on the same drawing or document. In that case, the area of responsibility of each Engineer will be noted in the area of each signed seal.

E. EXPOSED: “Exposed” areas are all areas which are exposed to view by the building occupants, including under counters, inside cabinets and closets, plus all mechanical and electrical rooms.

F. OWNER: As used in these specifications, “Owner” means the Texas Department of Transportation, as represented by the assigned designee.

G. INDICATED: The term "indicated" is a cross reference to graphic representations, notes or schedules on drawings, to other paragraphs or schedules in the Specifications, and to similar means of recording requirements on contract documents. Where terms such as "shown", "noted", "scheduled", and "specified" are used in lieu of "indicated", it is for the purpose of helping reader locate the cross reference, and no limitation of location is intended except as specifically noted.

H. DIRECTED, REQUESTED, etc.: Where not otherwise explained, terms such as "directed", "requested", "authorized", "selected", "approved", "required", "accepted", and "permitted" mean directed by Architect/Engineer", "requested by Architect/Engineer" and similar phrases. However, no such implied meaning will be interpreted to extend Architect's/Engineer's responsibility into Contractor's area of construction supervision and job safety.

I. AND/OR: Where "and/or" is used in these Specifications or on the Drawings, it shall mean "that situations exist where either one or both conditions occur or are required and shall not be interpreted to permit an option on the part of the Contractor.

J. APPROVE: Where used in conjunction with Architect's/Engineer's response to submittals, requests, applications, inquiries, reports and claims by Contractor, the meaning of term "approved" will be held to limitations to Architect's/Engineer's responsibilities and duties as specified in General and Supplementary Conditions. In no case will "approval" by Architect/Engineer be interpreted as a release of Contractor from responsibilities to fulfill requirements of contract documents or to extend Architect's/Engineer's responsibility into Contractor's area of construction supervision and job safety.

K. AS REQUIRED: Where "as required" is used in these Specifications or on the drawings, it shall mean "that situations exist that are not necessarily described in detail or indicated that may cause the Contractor certain complications in performing the work described or indicated. These complications entail the normal coordination activities expected of the Contractor where multiple trades are involved and new or existing construction causes deviations to otherwise simplistic approaches to the work to be performed. The term shall not be interpreted to permit an option on the part of the Contractor to achieve the end result."

L. FURNISH:

1. The term "furnish" is used to mean "supply and deliver to project site, ready for unloading, unpacking, assemble, installation, and similar operations."
2. Where "furnish" applies to work for which the installation is not otherwise specified, "furnish" in such case shall mean "furnish and install."

M. INSTALL: The term "install" is used to describe operations at project site including "unloading, unpacking, assembly, erection, placing, anchoring, applying, working to dimension, finishing, curing, protecting, cleaning and similar operation."

N. PROVIDE: The term "provide" means "to furnish and install, complete and ready for intended use."

1.6 UTILITY CONNECTIONS AND INSPECTIONS

A. General: Refer to DIVISION 1 for construction phasing and time increments.

B. Fees and Costs: If, during the course of the construction, a need arises to buy utilities, the Contractor shall pay all fees attendant thereto. If the City or other privately or publicly owned utility piping or electrical cable needs to be extended, relocated, or terminated, the Contractor shall pay all permits and construction/inspection fees associated with that particular work, the costs for which shall be included in the Contract price, including the cost of setting meters.

C. All work performed on this project is under the authority of the State of Texas, however, some local construction fees or construction or inspection permits may be required for new service connections, or modified connections to City or utility company controlled services. Refer to the Division 1 Section of specifications on “Special Conditions” for clarification, or contact the regulating entity directly. Note also that if inspections by personnel of jurisdictions other than TxDOT are specifically required by this document, then the Contractor is responsible for any fees or permits in connection to those requirements.

D. Compliance: The Contractor shall comply in every respect with all requirements of the National Fire Protection Association, the local Fire Department requirements and all utility company requirements. In no case does this relieve the Contractor of the responsibility of complying with these Specifications and Drawings where specified conditions are of higher quality or quantity than the requirements of the above-specified authorities. Where requirements of the Specifications and Drawings are more lenient than the requirements of the above authorities, the Contractor shall make installations in compliance with the requirements of the above authorities with no extra compensation.

1.7 COORDINATION OF THE CONTRACT DOCUMENTS

A. The interrelation of the Specifications, the Drawings, and the schedules are as follows: The Specifications determine the nature and quality of the materials, the Drawings establish the quantities, dimensions and details, and the schedules give the capacities and performance characteristics. If the Contractor requires additional clarification, a request shall be submitted in writing, and a response will be given in writing.

B. Should the Drawings or Specifications conflict within themselves, or with each other, the requirement with the greatest quantity and/or the highest quality shall prevail. The decision of the engineer of record for the system being installed shall be final.

1.8 FUTURE WORK

A. The work described in the drawings shall be performed under this contract. It shall be noted that certain equipment and systems have been sized to anticipate a possible future addition to the building. It is imperative that the Contractor provide and install the equipment and systems as shown in the drawings and schedules, of the sizes, capacities and dimensions indicated.

1.9 SUBMITTALS

A. Submit under provisions of UGC (the "Uniform General Conditions") and Special Conditions Section of the Specifications.

B. Mark all submittal literature to indicate the precise selection of materials and equipment being submitted. Note that if the specific model or material is not indicated in the submittal, and there is more than one choice possible, the submittal may be rejected and resubmittal will be required.

C. Changes in Contract requirements will not be granted and shall not be implied by approval of submitted alternative materials and equipment. Changes will only be effected through the Change Order process, in writing.

D. Proposed Products List: Include all equipment and materials specified in Section 16011.

E. Submit shop drawings and product data grouped to include complete submittals of related systems, products, and accessories in a single submittal.

F. Submit Fabrication Drawings whenever (1) equipment proposed varies in physical size and arrangement from that indicated on the Drawings, thus causing rearrangement of equipment space, (2) where tight spaces require extreme coordination between ductwork, piping, conduit, and other equipment, (3) where called for elsewhere in these Specifications; and (4) where specifically requested by the Design Engineer. Fabrication Drawings shall be made at no additional charge to the Owner or the Design Engineer.

G. All required Fabrication Drawings, except as noted otherwise, shall be prepared at a scale of not less than 1/4" = 1'-0". Fabrication Drawings for ductwork and air handling units shall be drawn at a minimum scale of 3/8" = 1'-0". Submit three blueline prints of each Fabrication Drawing to the Design Engineer for review. Reproduction and submittal of the Construction Documents is not acceptable. The Engineer will review the drawing and return one print with comments.

1.10 SUBSTITUTION OF MATERIALS AND EQUIPMENT

A. It is not the intent of the Drawings and/or Specifications to limit products to any particular Manufacturer or to discriminate against an "APPROVED EQUAL" product produced by another Manufacturer. Some products of a particular Manufacturer may be mentioned to set a definite standard for acceptance and to serve as a reference in comparison with other products. On the other hand, when a Manufacturer's name appears in these Specifications or in the Drawings, it shall not be interpreted that the

Manufacturer is unconditionally acceptable as a provider of equipment for this project. The successful Manufacturer or Supplier shall meet all of the provisions of the appropriate specification(s).

B. The specified products have been used in preparing the Drawings and Specifications and thus establish minimum qualities with which substitutes must be at least equal to be considered acceptable. The burden of proof of equality rests with the Contractor. The decision of the Engineer is final.

C. In the event that the Contractor submits a proposal for a substitution, and the review and negotiation of the substitution (if handled in a timely, expedited manner) results in a delay of the contract work, then a reasonable extension of time for the contract may be allowed.

1.11 MATERIALS AND WORKMANSHIP

A. All materials, unless noted otherwise, shall be new, free from all defects, suitable for the intended use, and of the best quality of their respective kinds.

B. Materials and equipment shall be installed in accordance with the Manufacturer's recommendations and the best standard practice for the type of work involved.

C. All work shall be executed by mechanics and Contractors skilled in their respective trades, and the installations shall provide a neat, precise appearance.

D. Materials and/or equipment damaged in shipment or otherwise damaged prior to installation shall not be repaired at the job site but shall be replaced with new materials and/or equipment.

E. Similar equipment shall be products of the same Manufacturer. Materials shall be new of standard current products of Manufacturer's latest design. All components by the same Manufacturer shall be mechanically and electrically compatible with rating of apparatus in which installed. Similar equipment shall be identical. For example, all panelboards shall be of the Manufacturer and of the same style.

1.12 FLAME SPREAD PROPERTIES OF MATERIALS

A. Materials and adhesives incorporated into this project shall conform to NFPA Standard 255, "Method of Test of Surface Burning Characteristics of Building Materials". The classification shall not exceed a flame spread rating of 25, nor exceed a smoke developed rating of 50, for all materials, adhesives, finishes, etc., specified for each system.

1.13 MANUFACTURER'S RECOMMENDATIONS

A. The Manufacturer's published directions and/or recommendations shall be followed in the delivery, storage, protection, installation, and wiring of all equipment and material. The Contractor shall promptly notify the Engineer, in writing, of any conflict between the requirements of the Contract Documents and the Manufacturers' directions, and shall obtain the Engineer's guidance before proceeding with the work. Should the Contractor

perform any such work that does not comply with the Manufacturers' directions or such instructions from the Owner, the Contractor shall bear all costs arising in connection with the deficiencies.

1.14 SPACE AND EQUIPMENT ARRANGEMENT

A. The size of electrical equipment indicated on the Drawings is approximate and based on the dimensions of a particular Manufacturer. While other Manufacturers may be acceptable, it is the responsibility of the Contractor to determine if the equipment proposed by the Contractor will fit in the space.

B. All equipment shall be installed in a manner to permit access to all surfaces. All nameplates shall be able to be viewed without disassembly.

C. All equipment and piping shall be installed in a manner to provide the greatest amount of clearance for access and maintenance of systems and equipment. Installation of conduit and panels which blocks personnel access to all parts of chases or mechanical spaces is prohibited.

1.15 PROTECTION

A. The Contractor shall at all times take such precautions as may be necessary to properly protect all materials and equipment from damage from the time of delivery until the completion of the work. This shall include the erection of all required temporary shelters and supports to adequately protect any items stored in the open on the site from the weather, the ground and surrounding work; the cribbing of any items above the floor of the construction; and the covering of items in the incomplete building with tarpaulins or other protective covering; the installation of electric heaters in electrical switchgear and similar equipment to prevent moisture damage. Failure on the part of the Contractor to comply with the above will be sufficient cause for the rejection of the items in question.

B. Take particular care not to damage the building structure in performing work. All finished floors and finished surfaces shall be covered to prevent any damage by workers or their tools and equipment during the construction of the building.

1.16 SUPERVISION

A. Each Contractor and Subcontractor shall provide a competent superintendent or foreman for the work of their trade. (Refer also to the Uniform General Conditions for additional information concerning supervision.)

B. It shall be the responsibility of the General to assure that each superintendent studies all Drawings and is familiar with the work to be coordinated with and performed by other trades. The General Contractor shall coordinate the work of all trades and, before material is fabricated or installed, assure that the work will not cause an interference with another trade. Where interferences are encountered, they shall be resolved at the job site by the superintendents involved. Where interferences cannot be resolved without major changes to the Drawings, the matter shall be referred to the Engineer for a ruling. The decision of the Engineer shall be final.

1.17 SITE OBSERVATION

A. Site observation by the Architect, Engineer, Owner or any representative of the Owner, is for the express purpose of verifying compliance by the Contractor with the Contract Documents, and shall not be construed as construction supervision nor indication of approval of the manner or location in which the work is being performed as being a safe practice or place.

B. The safety of the workers on the site is the responsibility of the Contractor. By entering the site, the Contractor, Subcontractors, and their employees relieve the Owner of any responsibility for their safety, and accept complete responsibility for any unsafe acts or procedures which may cause them harm.

1.18 GUARANTEE

A. **The Contractor shall guarantee all labor and materials furnished and installed under this contract for a period of one (1) year from date of FINAL ACCEPTANCE by Owner.** Certain work and materials shall be guaranteed for a longer period when so specified. The guarantee shall cover the repair or replacement without additional cost to the Owner, of any defective material or faulty workmanship.

B. All necessary service to each system, such as adjustment of controls, mechanical repair of equipment and other work requiring specialized training, shall be furnished by the Contractor, at no cost to the Owner, for a period of one (1) year, concurrent with the warranty period specified above. This shall not include repair of damage due to fire unless the fire results from faulty materials or workmanship on the part of the Contractor, storm, vandalism, or other factors entirely beyond the control of the Contractor, nor shall it include such routine service as oiling motors, cleaning or replacing filters, replacing blown fuses (unless caused by defective performance of the equipment), nor any other work not requiring special skill. The above items pertaining to routine servicing of the equipment and motors, cleaning or replacing filters, or replacing fuses are the responsibility of the Owner unless a service agreement is made between the Contractor and the Owner.

C. If the Contractor shall fail to perform under these requirements, then the Uniform and Special General Conditions shall govern any required remedies the Owner may be forced to take.

1.19 CUTTING AND PATCHING

A. General: Provide openings in all new or existing construction indicated in the drawings, or as necessary for the proper installation of all systems included in the project.

B. Methods of cutting: Openings cut through concrete and masonry shall be made with masonry saws and/or core drills and at such locations acceptable to the Construction Inspector and Design Engineer. Impact-type equipment shall not be used except where specifically acceptable to the Design Architect and Engineer. Openings in precast concrete slabs for conduits, outlet boxes, etc., shall be core drilled to exact size.

C. Restoration: All openings shall be finished, closed around penetrating materials as specified, or restored to "as-new" condition under the appropriate Specification Section for the materials involved, and shall match remaining surrounding materials and/or finishes.

D. Masonry: Where openings are cut through masonry walls, provide and install lintels or other structural supports to protect the remaining masonry. Adequate supports shall be provided during the cutting operation to prevent any damage to the masonry occasioned by the operation. All structural members, supports, etc., shall be of the proper size and shape, and shall be installed in a manner acceptable to the Design Engineer.

E. Plaster: All mechanical work in areas containing plaster shall be completed prior to the application of the finish plaster coat. Cutting of finish plaster coat will not be permitted.

F. Special Note: No cutting, boring, or excavating which will weaken the structure shall be undertaken.

G. Refer to Specification Division 2 for requirements governing trenching.

1.20 ROOF PENETRATIONS AND FLASHING

A. Conduit and duct sleeves, pitch pockets, and flashings compatible with the roofing installation shall be provided and installed by a qualified Contractor for all roof penetrations. This shall be the responsibility of the General Contractor.

1.21 OPERATION PRIOR TO COMPLETION

A. When any piece of electrical equipment is operable and it is to the advantage of the Contractor to operate the equipment for a purpose other than testing (for a period longer than one hour), the Contractor may do so, providing that the operation is properly supervised, and the Construction Inspector has given written permission. The warranty period shall not commence until such time as the equipment is operated for the beneficial use of the Owner, or date of substantial completion, whichever occurs first.

B. No equipment shall be operated, even for test purposes, until it has been thoroughly swept and vacuumed clean of dust, dirt and debris.

C. Regardless of whether or not the equipment has or has not been operated, the Contractor shall properly clean the equipment, install clean filters, properly adjust, and complete all deficiency list items before final acceptance by the Owner as described in the following paragraph. The date of acceptance and performance certification shall be the same date.

1.22 CHECKING AND TESTING MATERIALS AND/OR EQUIPMENT

A. Before the work is accepted, an authorized representative of the Manufacturer of the installed materials and/or equipment shall personally inspect the installation and operation of the materials and/or equipment to determine that it is properly installed and in proper operating order. The qualifications of the representative shall be appropriate to the technical requirements of the installation and shall be submitted to the owner for

approval. The decision of the owner concerning the appropriateness of the representative shall be final. Testing and checking shall be accomplished during the course of the work where required by work being concealed, and at the completion of the work otherwise. In addition, the Contractor shall submit to the Design Engineer all close out documents listed in Section 16011.

1.23 CLEANING AND PAINTING

A. All equipment furnished by the mechanical Subcontractors shall be delivered to the job with a suitable factory protective finish. The following materials shall not be painted: copper, galvanized metal, stainless steel, fiberglass, and plastics such as PVC, PVDF, polypropylene, etc.

B. If painting is required, before painting, materials and equipment surfaces shall be thoroughly cleaned of cement, plaster, and other foreign materials, and all oil and grease shall be removed. Such surfaces shall be carefully wiped and all cracks and corners scraped out. Exposed metal work shall be carefully brushed down with steel brushes to remove rust and other spots and left smooth and clean.

C. Equipment nameplates shall be protected from being painted; suitable protection shall be afforded to the plates to prevent their being rendered illegible due to the painting operation, or receiving any overspray or spatter.
   1. All uncovered, unprotected steel supports and hanger rod threads shall be cleaned and painted with two coats of Tropical Paint Co. No. 77-black asphaltic emulsion. Galvanized steel conduit shall not be painted.
   2. The surfaces to be finish painted shall first be prepared as follows:
   3. All ferrous metal surfaces without a protective finish and not galvanized in exposed and concealed areas including chases, and above ceilings shall be painted with two (2) coats of P&L zinc chromate primer as the construction progresses to protect against oxidation and deterioration.

PART 2 - PRODUCTS (Not Used)

PART 3 - EXECUTION

3.1 INSTALLATION METHODS

A. Support: All wiring, cable trays and conduits shall be adequately and properly supported from the building structure by means of hanger rods or clamps fastened to the building structure as herein specified.

B. All conduits, etc., shall be cut accurately to measurements established from the actual building conditions and shall be worked into place without springing or forcing. All conduits run exposed in machinery and equipment rooms shall be installed parallel to the building lines. Conduits run in furred ceilings, etc., shall be similarly installed, unless noted otherwise. Conduits in furred ceilings and in other concealed spaces shall be neatly

grouped and racked. All conduit openings shall be maintained in a sealed condition until the systems are closed with final connections.

C. All openings through all floors, walls, and roofs, etc., regardless of material for the passage of conduit, cable trays, etc., shall be sleeved. All penetrations must pass through sleeves. Sleeves shall be set in new construction before concrete is poured, as cutting holes through any part of the concrete will not be permitted unless acceptable to the Architect/Engineer. Installation of sleeves and the sealing of sleeves shall be the responsibility of the electrical Contractor except roof sleeves.

3.2 REQUIRED INSPECTIONS

A. Prior to the installation of any ceiling material, gypsum, plaster, or acoustical board, the Contractor shall notify the construction inspector so that arrangement can be made for an inspection of the above-ceiling area about to be “sealed” off. The Contractor shall give as much advance notice as possible, but no less than five (5) working days.

B. All above-ceiling areas will be subject to a formal inspection before ceilings are installed, or installation is otherwise concealed from view. All electrical work at and above the ceiling, including items supported by the ceiling grid, such as lighting fixtures, shall be complete and installed in accordance with contract requirements, including power to lighting fixtures, fans, and other powered items and all conduit supports. Adequate lighting shall be provided to permit thorough inspection of all above-ceiling items. The inspection will include representatives of the following: General Contractor and each Subcontractor having work above the ceiling, Engineer(s) of Record, Construction Inspector(s), and the Maintenance Staff. Areas to be included and time of inspection shall be coordinated with the Construction Inspector.

C. The purpose of this inspection is to verify the completeness and quality of the installation of the electrical systems and any other special above ceiling systems. The ceiling supports (tee bar or lath) shall be in place so that access panel and light fixture locations are identifiable and so that clearances and access provisions may be evaluated.

D. No ceiling materials may be installed until the resulting deficiency list from this inspection is satisfied and the Construction Inspector has given approval.

3.3 TESTING

A. Tests for specific systems and equipment are specified in associated specification sections or in the drawings. All tests specified or indicated shall be performed and witnessed by the Owner. All tests shall be individually documented, and the test report for each shall be included in the final documentation submitted to the Owner at the completion of the project. Data shall be delivered to the Design Engineer as specified under “Requirements for Final Acceptance”. The documentation shall include as a minimum:
   1. Contractor firm name, supervisor’s name, and name of personnel performing test
   2. Date and time of beginning of test, and date and time of test completion
   3. Description of equipment or system being tested
   4. Description of test being performed
   5. Description of outcome of test

6. Dated signatures of person performing test, Contractor's supervisor, and Owner's representative, including legibly printed names and titles

B. The Contractor shall make, at no additional cost to the Owner, any tests deemed necessary by the inspection departments having jurisdiction, and in the National Fire Protection Association, ASTM, etc. Standards listed. The Contractor shall provide all equipment, materials, and labor for making such tests. Reasonable amounts of fuel and electrical energy costs for system tests will be paid by the Owner where services are readily available. Where such services are not readily available, the Contractor shall provide all water, electricity or fuel. NOTE THAT SUCH TESTS WILL BE REASONABLY REQUIRED TO CONFIRM THE SPECIFIED OPERATION, CAPACITY, OR DURABILITY OF THE MATERIAL OR EQUIPMENT, AND WILL NOT BE INVOKED UNLESS DEEMED ABSOLUTELY NECESSARY.

C. The Construction Inspector shall be notified in writing at least 5 working days prior to each test and other Specification requirements requiring action on the part of the Construction Inspector. All equipment shall be placed in operation and tested for proper automatic control requirements before the balancing agency starts their work.

D. Insulation resistance test shall be made on each 208 volt feeder conductor after installation. Tests shall be made with a 500 vdc megger. Readings shall be recorded and test reports furnished as described in this section.

E. All defective lamps found during testing shall be replaced.

F. All receptacles and light switches shall be tested to verify they are connected properly.

G. All HVAC motors and line voltage controls shall be checked to verify correct operation.

H. All panelboards shall be inspected prior to installing covers to verify correct wiring connections and color coding procedures.

3.4 TRAINING

A. Prior to final acceptance of the project, Contractor shall provide a minimum of six (6) hours of training for a minimum of four (4) of the Owners personnel, on the operation and maintenance of the existing systems, including normal maintenance procedures and the location and operation of emergency shut down switches, etc. Contractor shall provide complete, written, Manufacturers literature on all electrical systems for each person trained.

END OF SECTION

SECTION 16011

ELECTRICAL SUBMITTAL AND CLOSE OUT DOCUMENTS

PART 1 - GENERAL

1.1 RELATED SECTIONS

A. Section 16060 – Grounding & Bonding

B. Section 16070 – Hangers and Supports

C. Section 16075 – Electrical Identification

D. Section 16123 – Building Wire and Cable

E. Section 16130 – Raceway and Boxes

F. Section 16140 – Wiring Devices

G. Section 16150 – Wiring Connections

H. Section 16235 – Engine Generators

I. Section 16289 – TVSS

J. Section 16411 – Enclosed Switches

K. Section 16442 – Panelboards

L. Section 16491 – Fuses

M. Section 16510 – Interior Luminaires

N. Section 16520 – Exterior Luminaires

O. Section 16530 – Emergency Lighting

P. Section 16710 – Telecommunications

Q. Section 16722 – Gas Monitoring

1.2 WORK INCLUDES

A. The Contractor shall provide equipment submittal data as summarized in 1.3. The complete requirements are listed in the referenced Division 16 section.

B. The Contractor shall provide close out data as summarized in 1.4. The complete requirements are listed in the referenced Division 16 section.

1.3 SUBMITTAL SUMMARY

A. Section 16060 – Grounding and Bonding
1. Product Data: Submit data on grounding electrodes and connections.
2. Test Reports: Provide grounding system test reports.

B. Section 16070 – Hangers and Supports
1. Product Data: Submit Manufacturers catalog data including load capacity.
2. Provide Manufacturer's Installation Instructions.
3. Manufacturer's Certificate: Certify products meet or exceed specified requirements.

C. Section 16075 – Electrical Identification
1. Product Data: Submit Manufacturer’s catalog literature for each product used on the project.
2. Manufacturer's Installation Instructions: Indicate installation instructions, special procedures, and installation.

D. Section 16123 – Building Wire and Cable
1. Product Data: Submit for building wire and cable.

E. Section 16130 – Raceway and Boxes
1. Product Data: Submit for the following:
    a. Flexible metal conduit
    b. Liquid tight flexible metal conduit
    c. Nonmetallic conduit
    d. Raceway fittings
    e. Conduit bodies
    f. Wireway
    g. Pull and junction boxes
2. Manufacturer's Installation Instructions: Submit application conditions and limitations of use stipulated by Product testing agency specified under Regulatory Requirements. Include instructions for storage, handling, protection, examination, preparation, and installation of Product.

F. Section 16140 – Wiring Devices
1. Product Data: Submit Manufacturer's catalog information showing dimensions, colors, and configurations.

G. Section 16150 – Wiring Connections
1. Product Data: Submit wiring device Manufacturer’s catalog information showing dimensions, configurations, and construction.
2. Provide Manufacturer's installation instructions.

H. Section 16235 – Engine Generators
1. Shop Drawings: Indicate electrical characteristics and connection requirements. Include plan and elevation views with overall and interconnection point dimensions, fuel consumption rate curves at various loads, ventilation and combustion air requirements, electrical diagrams including schematic and interconnection diagrams.
2. Product Data: Submit data showing dimensions, weights, ratings, interconnection points, and internal wiring diagrams for engine, generator, control panel, transfer

switch, battery, battery rack, battery charger, exhaust silencer, and vibration isolators.

3. Test Reports: Indicate results of performance testing.
4. Manufacturer's Field Reports: Indicate inspections, findings, and recommendations.

I. Section 16289 – TVSS
   1. Product Data: Submit capacity, dimensions, weights, details, and wiring configuration.
   2. Test Reports:
      a. Indicate Let-Through voltage test data.
      b. Submit spectrum analysis of each unit.
      c. Submit test reports from nationally recognized independent testing laboratory verifying suppressors can survive published surge current rating.
      d. Manufacturer's Installation Instructions: Submit installation instructions and connection requirements.
      e. Manufacturer's Certificate: Certify transient voltage surge suppression device complies with UL 1449 Second Edition Surge Voltage Ratings.

J. Section 16411 – Enclosed Switches
   1. Product Data: Submit switch ratings and enclosure dimensions.

K. Section 16442 – Panelboards
   1. Shop Drawings: Indicate outline and support point dimensions, voltage, main bus ampacity, integrated short circuit ampere rating, circuit breaker and fusible switch arrangement and sizes.
   2. Product Data: Submit catalog data showing specified features of standard products.

L. Section 16491 – Fuses
   1. Product Data: Submit data sheets showing electrical characteristics, including time-current curves.

M. Section 16510 – Interior Luminaires
   1. Shop Drawings: Indicate dimensions and components for each luminaire not standard product of Manufacturer.
   2. Product Data: Submit dimensions, ratings, and performance data.

N. Section 16520 – Exterior Luminaires
   1. Product Data: Submit dimensions, ratings, and performance data.

O. Section 16530 – Emergency Lighting
   1. Product Data: Submit dimensions, ratings, and performance data.

P. Section 16710 – Telecommunications
   1. Prior to ordering any material, provide two (2) copies of complete brochure information on all products for installation on this project. All brochures and specification sheets shall be bound within a three-ring loose leaf binder and organized in the same manner as the Products portion of the Specifications. If more than one product is listed on the same page of the brochure or specification sheet submitted, the intended product or part number shall be clearly indicated or highlighted by the Contractor.

2. Contractor shall submit Proposed Test Procedures and a sample of the printout or test result form, as well as a list of all Test Equipment to be used for cable testing.
3. Contractor shall submit a Proposed Labeling and Cable Identification Scheme describing the outlet labeling, patch panel labeling, fiber patch panel labeling, voice termination labeling, and all cable end labeling procedures and samples.
4. Contractor shall submit all Proposed Firestopping System plans and methods for approval prior to beginning the firestopping portion of the work.

Q. Section 16722 – Gas Monitoring
1. Product Data: Provide Manufacturers data on all equipment and components described herein.
2. Submittal shall include Manufacturer's Installation Instructions and complete system wiring and central control station schematics.

1.4 CLOSEOUT SUBMITTALS: The items summarized below must be complete before the electrical portion of the project will be considered substantially complete. See reference sections for complete details. See section 16010 for complete test reporting procedures.

A. Section 16060 – Grounding and Bonding
1. Project Record Documents: Record actual locations of components and grounding electrodes.
2. Perform ground resistance testing in accordance with IEEE 142.
3. Perform continuity testing in accordance with IEEE 142.
4. When improper grounding is found on receptacles, check receptacles in entire project and correct. Perform retest.
5. All new ground rods shall be tested after installation using a ground rod resistance tester. The maximum resistance for each ground rod shall be no more than 25 ohms, as required by the NEC. After the ground rod resistance test, if the ground rod has a resistance higher than 25 ohms, the Contractor will need to modify the ground system to lower this resistance. To lower the resistance, the Contractor shall drive and interconnect additional ground rods in a triad formation, install longer ground rods or use manufactured, encapsulated electrolyte ground rods to obtain a resistance of 25 ohms or less. Manufactured, electrolyte ground rods shall be equal to Lyncole XIT Grounding Systems. For a multiple ground rod installations, rods shall be spaced 10' apart and #1/0 AWG or larger bare, copper conductors shall be installed underground between rods, minimum 18” below grade. After corrective measures are complete, the new ground rod installation shall be re-tested with a ground rod tester to show that each installation has a total resistance of 25 ohms or less. **Ground rod resistance test results shall be documented, signed by the licensed electrician performing the tests, and submitted to the Owner for approval. These test results shall include ground rod resistance values and the weather and soil conditions present during the tests**.

B. Section 16123 - Building Wire and Cable
1. Test installation after new wiring is completed and when fixtures and equipment have been connected ready for use. Resistance between conductors and between each conductor and ground shall conform to NEC.
2. All wires #1/**0 AWG and larger conductors and service entrance conductors shall pass a 500 volt megger test prior to placing in service. <u>Testing to be witnessed by Owner's representative.</u> Acceptable minimum insulation resistance is 50 megohms**.

C. Section 16235 – Engine Generators
   1. Operation and Maintenance Data: Submit instructions and service manuals for normal operation, routine maintenance, oil sampling and analysis for engine wear, and emergency maintenance procedures.
   2. Before the work is accepted, an authorized representative of the Manufacturer shall personally inspect the installation and operation of the equipment to determine that it is properly installed and in proper operating order. The qualifications of the representative shall be appropriate to the technical requirements of the installation and shall be submitted to the owner for approval. The decision of the owner concerning the appropriateness of the representative shall be final. Testing and checking shall be accomplished during the course of the work where required by work being concealed, and at the completion of the work otherwise. In addition, the Contractor shall submit to the Design Engineer a signed statement from the representative certifying as follows: "I certify that the materials and/or equipment listed below have been personally inspected by the undersigned authorized Manufacturer's representative and is properly installed and operating in accordance with the Manufacturer's recommendations".
   3. Furnish 8 hours of instruction each for two persons, to be conducted at project site with Manufacturer's representative.

D. Section 16411 – Panelboards
   1. Project Record Documents: Record actual locations of panelboards and record actual circuiting arrangements.
   2. Operation and Maintenance Data: Submit spare parts listing; source and current prices of replacement parts and supplies; and recommended maintenance procedures and intervals.

E. Section 16491 – Fuses
   1. Project Record Documents: Record actual sizes, ratings, and locations of fuses.

F. Section 16710 – Telecommunications
   1. Contractor shall maintain one set of drawings on site to continually and accurately record the as-constructed work. The mark-up drawings shall accurately indicate locations of all equipment, pull-boxes, conduits, cable types, cable routing, cable labeling, outlet locations, and outlet labeling. All record drawings shall be maintained and updated daily and made available for inspection at any time during the course of the work by the Owner or the Owner's Representative. At project completion Contractor shall deliver drawings and documentation of the project, in both hard copy and in AutoCAD V12 or later format, to minimally include:
   2. As-built connectivity diagram indicating pathways and utilization of duct bank system for fiber optic cable connectivity.
   3. As-built telecommunications floor plans of the facility with entire contracted cable and outlet placement clearly depicted.
   4. As-built elevations of all termination fields describing cable and outlet location labeling scheme.
   5. As-built logical riser diagram describing connectivity and cable sizes for both telecommunications and grounding cabling systems.
   6. Cable test results submitted in both hard copy and magnetic format along with viewing software from the tester Manufacturer. Hard copy to be bound within loose-leaf binder neatly organized according to the test type and medium as identified in the Testing portion of this Specification.

G. Section 16722 – Gas Monitoring

1. Calibrate monitoring system per Manufacturer's recommendations. The Manufacturer's authorized technical representative shall be present during all tests and inspections. The Manufacturer's authorized representative shall provide supervision of final connections to the system panel, perform a complete functional test of the system and submit a written report to the Contractor attesting to the proper operation of the completed system. This report shall be a part of the final documents submitted to the owner.
2. The Manufacturer's authorized representative shall perform an eight (8) hour training session where the representative shall instruct and train a minimum of six (6) TxDOT personnel and, if applicable, local Fire Department personnel in the operation of the system. At the training session, the Manufacturer's authorized representative shall provide a complete written operating and maintenance manual that clearly describes the system, its operation, and any maintenance requirements. It shall also have a clearly understandable maintenance schedule and a complete parts list for all components of the system(s).

PART 2 - PRODUCTS (Not Used)

PART 3 - EXECUTION (Not Used)

END OF SECTION

SECTION 16060

GROUNDING AND BONDING

PART 1 - GENERAL

1.1 SUMMARY

A. Section Includes:
   1. Rod electrodes
   2. Wire
   3. Mechanical connectors
   4. Exothermic connections

1.2 RELATED SECTIONS

A. Section Includes: Section 16010 – Basic Electrical Requirements

1.3 REFERENCES

A. Institute of Electrical and Electronics Engineers:
   1. IEEE 142 - Recommended Practice for Grounding of Industrial and Commercial Power Systems
   2. IEEE 1100 - Recommended Practice for Powering and Grounding Electronic Equipment

B. National Fire Protection Association:
   1. NFPA 70 - National Electrical Code

1.4 SYSTEM DESCRIPTION

A. Grounding systems use the following elements as grounding electrodes:
   1. Metal underground water pipe
   2. Building steel
   3. Rod electrode

1.5 PERFORMANCE REQUIREMENTS

A. Grounding System Resistance: Per NEC, 25 ohms maximum for a single grounding electrode or 25 ohms maximum for multiple electrodes that are connected together.

1.6 SUBMITTALS

A. Product Data: Submit data on grounding electrodes and connections.

B. Test Reports: Provide grounding system test reports per Part 3.4.

1.7 CLOSEOUT SUBMITTALS

A. Project Record Documents: Record actual locations of components and grounding electrodes.

1.8 QUALITY ASSURANCE

A. Provide grounding materials conforming to requirements of NEC, IEEE 142, and UL labeled.

1.9 QUALIFICATIONS

A. Manufacturer: Company specializing in manufacturing Products specified in this section with minimum three years experience.

B. Installer: Company specializing in performing work of this section with minimum 3 years experience.

1.10 DELIVERY, STORAGE, AND HANDLING

A. Accept materials on site in original factory packaging, labeled with Manufacturer's identification.

B. Protect from weather and construction traffic, dirt, water, chemical, and mechanical damage, by storing in original packaging.

1.11 COORDINATION

A. Complete grounding and bonding of building reinforcing steel prior concrete placement.

PART 2 - PRODUCTS

2.1 ROD ELECTRODES

A. Manufacturers:
1. Copperweld, Inc.
2. Erico, Inc.
3. O-Z Gedney Co.
4. Thomas & Betts, Electrical

B. Product Description:
1. Material: Copper-clad steel
2. Diameter: 3/4 inch
3. Length: 10 feet

C. Connector: Connectors for exothermic welded connections only.

2.2 WIRE

A. Material: Stranded copper

B. Grounding Electrode Conductor: Copper conductor, insulated

C. Bonding Conductor: Copper conductor, insulated

2.3 MECHANICAL CONNECTORS

A. Manufacturers:
1. Erico, Inc.
2. ILSCO Corporation
3. O-Z Gedney Co.
4. Thomas & Betts, Electrical

B. Description: Bronze connectors, suitable for grounding and bonding applications, in configurations required for particular installation.

2.4 EXOTHERMIC CONNECTIONS

A. Manufacturers:
1. Cadweld, Erico, Inc.
2. Copperweld, Inc.
3. ILSCO Corporation
4. O-Z Gedney Co.
5. Thomas & Betts, Electrical

B. Product Description: Exothermic materials, accessories, and tools for preparing and making permanent field connections between grounding system components.

PART 3 - EXECUTION

3.1 EXAMINATION

A. Verify final backfill and compaction has been completed before driving rod electrodes.

3.2 PREPARATION

A. Remove surface contaminants at connection points.

3.3 INSTALLATION

A. Install in accordance with IEEE 142.

B. Install rod electrodes at locations as indicated on Drawings. Install additional rod electrodes to achieve specified resistance to ground.

C. Install grounding and bonding conductors concealed from view.

D. Bond together metal siding not attached to grounded structure; bond to ground.

E. Install isolated grounding conductor for circuits supplying personal computers in accordance with IEEE 1100.

F. Equipment Grounding Conductor: Install separate, insulated conductor within each feeder and branch circuit raceway. Terminate each end on suitable lug, bus, or bushing.

G. Permanently ground entire light and power system in accordance with NEC, including service equipment, distribution panels, lighting panel boards, switch and starter enclosures, motor frames, grounding type receptacles, and other exposed non-current carrying metal parts of electrical equipment.

H. Install branch circuits feeding isolated ground receptacles with separate insulated grounding conductor, connected only at isolated ground receptacle ground terminals, and at isolated ground bus of serving panel.

I. Permanently attach equipment and grounding conductors prior to energizing equipment.

3.4 FIELD QUALITY CONTROL

A. Perform ground resistance testing in accordance with IEEE 142.

B. Perform continuity testing in accordance with IEEE 142.

C. When improper grounding is found on receptacles, check receptacles in entire project and correct. Perform retest.

D. All new ground rods shall be tested after installation using a ground rod resistance tester. The maximum resistance for each ground rod shall be no more than 25 ohms, as required by the NEC. After the ground rod resistance test, if the ground rod has a resistance higher than 25 ohms, the Contractor will need to modify the ground system to lower this resistance. To lower the resistance, the Contractor shall drive and interconnect additional ground rods in a triad formation, install longer ground rods or use manufactured, encapsulated electrolyte ground rods to obtain a resistance of 25 ohms or less. Manufactured, electrolyte ground rods shall be equal to Lyncole XIT Grounding Systems. For a multiple ground rod installations, rods shall be spaced 10' apart and #1/0 AWG or larger bare, copper conductors shall be installed underground between rods, minimum 18” below grade. After corrective measures are complete, the new ground rod installation shall be re-tested with a ground rod tester to show that each installation has a total resistance of 25 ohms or less. **Ground rod resistance test results shall be documented, signed by the licensed electrician performing the tests, and submitted to the Owner for approval. These test results shall include ground rod resistance values and the weather and soil conditions present during the tests**.

END OF SECTION

SECTION 16070

ELECTRICAL HANGERS AND SUPPORTS

PART 1 - GENERAL

1.1 SUMMARY

A. Section Includes:
1. Conduit supports
2. Formed steel channel
3. Spring steel clips
4. Sleeves
5. Mechanical sleeve seals
6. Equipment bases and supports

1.2 RELATED SECTIONS

A. Division 3 - Cast-In-Place Concrete: Product requirements for concrete for placement by this section.

1.3 REFERENCES

A. National Fire Protection Association:
1. NFPA 70 - National Electrical Code

1.4 SUBMITTALS

A. Shop Drawings: Indicate system layout with location and detail of trapeze hangers.

B. Product Data: Submit Manufacturers catalog data including load capacity.

C. Manufacturer's Installation Instructions: Provide complete Manufacturer’s installation instructions.

D. Manufacturer's Certificate: Certify products meet or exceed specified requirements.

1.5 QUALIFICATIONS

A. Manufacturer: Company specializing in manufacturing Products specified in this section with minimum three years experience.

B. Installer: Company specializing in performing work of this section with minimum 3 years experience.

1.6 DELIVERY, STORAGE, AND HANDLING

A. Accept materials on site in original factory packaging, labeled with Manufacturer's identification.

B. Protect from weather and construction traffic, dirt, water, chemical, and mechanical damage, by storing in original packaging.

PART 2 - PRODUCTS

2.1 CONDUIT SUPPORTS

A. Manufacturers:
1. Allied Tube & Conduit Corp.
2. Electroline Manufacturing Company
3. O-Z Gedney Co.

B. Hanger Rods: Threaded high tensile strength galvanized carbon steel with free running threads.

C. Beam Clamps: Malleable Iron, with tapered hole in base and back to accept either bolt or hanger rod. Set screw: hardened steel.

D. Conduit clamps for trapeze hangers: Galvanized steel, notched to fit trapeze with single bolt to tighten.

E. Conduit clamps - general purpose: One hole malleable iron for surface mounted conduits.

F. Cable Ties: High strength nylon temperature rated to 185 degrees F. Self locking.

2.2 FORMED STEEL CHANNEL

A. Manufacturers:
1. Allied Tube & Conduit Corp.
2. B-Line Systems
3. Midland Ross Corporation, Electrical Products Division
4. Unistrut Corp.

B. Product Description: Galvanized 12 gage thick steel. With holes 1-1/2 inches on center.

2.3 SLEEVES

A. Sleeves for conduits through Non-fire Rated Floors: 18 gage thick galvanized steel.

B. Sleeves for conduits through Non-fire Rated Beams, Walls, Footings, and Potentially Wet Floors: Steel pipe or 18 gage thick galvanized steel.

2.4 MECHANICAL SLEEVE SEALS

A. Manufacturers:
1. Thunderline Link-Seal, Inc.
2. NMP Corporation

B. Product Description: Modular mechanical type, consisting of interlocking synthetic rubber links shaped to continuously fill annular space between object and sleeve, connected with bolts and pressure plates causing rubber sealing elements to expand when tightened, providing watertight seal and electrical insulation.

PART 3 - EXECUTION

3.1 EXAMINATION

A. Verify openings are ready to receive sleeves.

3.2 INSTALLATION - HANGERS AND SUPPORTS

A. Anchors and Fasteners:
1. Concrete Structural Elements: Provide expansion anchors or powder actuated anchors.
2. Steel Structural Elements: Provide beam clamps.
3. Concrete Surfaces: Provide self-drilling anchors and expansion anchors.
4. Solid Masonry Walls: Provide expansion anchors.
5. Sheet Metal: Provide sheet metal screws.
6. Wood Elements: Provide wood screws.

B. Install conduit and raceway support and spacing in accordance with NEC.

C. Do not fasten supports to pipes, ducts, mechanical equipment, or conduit.

D. Install multiple conduit runs on common hangers.

E. Supports:
1. Fabricate supports from structural steel or formed steel channel. Install hexagon head bolts to present neat appearance with adequate strength and rigidity. Install spring lock washers under nuts.
2. Install surface mounted cabinets and panelboards with minimum of four anchors.
3. In wet and damp locations install steel channel supports to stand cabinets and panelboards 1 inch off wall.

3.3 INSTALLATION - EQUIPMENT BASES AND SUPPORTS

A. Provide housekeeping pads of concrete, minimum 3-1/2 inches thick and extending 6 inches beyond supported equipment.

B. Using templates furnished with equipment, install anchor bolts, and accessories for mounting and anchoring equipment.

3.4 INSTALLATION - SLEEVES

A. Exterior watertight entries: Seal with adjustable interlocking rubber links.

B. Conduit penetrations not required to be watertight: Sleeve and fill with silicon foam.

C. Set sleeves in position in forms. Provide reinforcing around sleeves.

D. Size sleeves large enough to allow for movement due to expansion and contraction. Provide for continuous insulation wrapping.

E. Extend sleeves through floors 1 inch above finished floor level. Caulk sleeves.

F. Where conduit or raceway penetrates floor, ceiling, or wall, close off space between conduit or raceway and adjacent work with stuffing insulation and caulk airtight. Provide close fitting metal collar or escutcheon covers at both sides of penetration.

G. Install chrome plated steel escutcheons at finished surfaces.

3.5 PROTECTION OF FINISHED WORK

A. Protect adjacent surfaces from damage by material installation.

END OF SECTION

SECTION 16075

ELECTRICAL IDENTIFICATION

PART 1 - GENERAL

1.1 SUMMARY

A. Section Includes:
1. Nameplates
2. Adhesive signs
3. Wire markers
4. Conduit markers
5. Underground Warning Tape

1.2 RELATED SECTIONS

A. Section 16010 – Basic Electrical Requirements

1.3 SUBMITTALS

A. Product Data:
1. Submit Manufacturer’s catalog literature for each product used on the project.

B. Manufacturer's Installation Instructions: Indicate installation instructions, special procedures, and installation.

1.4 QUALIFICATIONS

A. Manufacturer: Company specializing in manufacturing Products specified in this section with minimum three years experience.

B. Installer: Company specializing in performing Work of this section with minimum three years experience.

1.5 DELIVERY, STORAGE, AND HANDLING

A. Accept identification products on site in original containers. Inspect for damage.

B. Protect from weather and construction traffic, dirt, water, chemical, and mechanical damage, by storing in original wrapping.

1.6 NAMEPLATES

A. Product Description: Laminated three-layer plastic with engraved white letters on a black background color.

B. Letter Size:
1. 1/8 inch high letters for identifying individual equipment and loads.

2. ¼ inch high letters for identifying grouped equipment and loads.

C. Minimum nameplate thickness: 1/8 inch.

1.7 ADHESIVE WARNING SIGNS

A. Product Description: Sized as noted on the drawings. Pressure-Sensitive Vinyl with adhesive backing, 4- mil thick, white background with black lettering, OSHA header color as noted by the sign type, rated for outdoor use, fade resistant in sunlight, flexible down to -40° F.

1.8 WIRE MARKERS

A. Description: Split sleeve, or tubing type wire markers or other standard wire marking system as approved by the Engineer.

B. Legend:
1. Power and Lighting Circuits: Branch circuit or feeder number as indicated on Drawings.
2. Control Circuits: Control wire number as indicated Drawings.

1.9 CONDUIT AND RACEWAY MARKERS

A. Description: Labels fastened with adhesive.

B. Color:
1. 208 Volt System: Black lettering on white background
2. Telephone System: Blue lettering on white background

C. Legend:
1. 208 Volt System: 208 VOLTS
2. Telephone System: TELEPHONE

1.10 UNDERGROUND WARNING TAPE

A. Description: Minimum 4 or 6 inch wide plastic tape, detectable type, colored red with suitable warning legend describing buried electrical lines.

1.11 PREPARATION

A. Degrease and clean surfaces to receive adhesive for identification materials.

1.12 INSTALLATION

A. Install identifying devices after completion of painting.

B. Nameplate Installation:
1. Install nameplate parallel to equipment lines.
2. Install nameplate for each electrical distribution and control equipment enclosure with corrosive-resistant mechanical fasteners.

3. Install nameplates for each control panel and major control components located outside panel with corrosive-resistant mechanical fasteners.
4. Secure nameplate to equipment front using screws.
5. Secure nameplate to inside surface of door on recessed panel board in finished locations.
6. Each nameplate shall include the equipment name or designation, the voltage, the phase and the state the source panel of the feeder to the equipment in a statement that reads “FEEDS FROM PANEL __”.
7. Install nameplates for the following:
    a. Main Service Disconnect Device
    b. Switchboards
    c. Panel boards
    d. Transformers
    e. Service Disconnect Devices for equipment
    f. Individual Circuit Breaker enclosures
    g. Current Transformer enclosures
    h. Other enclosures as noted on the drawings or as directed by the Owner

C. Junction Box Labeling:
1. All junction and pull boxes 4” square or smaller shall be labeled with the panel number and the circuit numbers contained in the box. This labeling shall be performed by legibly writing the information on the box cover with a black, indelible marker.

D. Wire Marker Installation:
1. Install wire marker for each conductor (hot wires and neutral wires) at panel boards, load centers, wireways, pull boxes, junction boxes, and at each load circuit connection point.
2. Mark data cabling at each end. Install additional marking at accessible locations along the cable run.
3. Install labels at data outlets identifying patch panel and port designation as indicated on Drawings.

E. Underground Warning Tape Installation:
1. Install underground warning tape along length of each underground conduit, raceway, or cable 6 to 8 inches below finished grade, directly above buried conduit, raceway, or cable. Install warning tape with writing facing up.

END OF SECTION

SECTION 16123

BUILDING WIRE AND CABLE

PART 1 - GENERAL

1.1 SUMMARY

A. Section includes building wire and cable and wiring connectors and connections.

1.2 RELATED SECTIONS

A. Section 16010 – Basic Electrical Requirements

1.3 SYSTEM DESCRIPTION

A. Product Requirements: Provide products as follows:
   1. Solid conductor for feeders and branch circuits 10 AWG and smaller
   2. Stranded conductors for control circuits
   3. Conductor not smaller than 12 AWG for power and lighting circuits
   4. Conductor not smaller than 12 AWG for line voltage control circuits
   5. 10 AWG conductors for 20 ampere, 120 volt branch circuits longer than 150 feet

B. Wiring Methods: Provide the following wiring methods:
   1. Concealed Dry Interior Locations: Use only Type THHN/THWN insulation, in raceway
   2. Exposed Dry Interior Locations: Use only Type THHN/THWN insulation, in raceway
   3. Above Accessible Ceilings: Use only Type THHN/THWN insulation, in raceway
   4. Wet or Damp Interior Locations: Use only Type THHN/THWN insulation, in raceway
   5. Exterior Locations: Use only Type THHN/THWN insulation, in raceway
   6. Underground Locations: Use only Type THHN/THWN insulation, in raceway

1.4 SUBMITTALS

A. Product Data: Submit for building wire and cable.

1.5 QUALIFICATIONS

A. Manufacturer: Company specializing in manufacturing products specified in this section with minimum three years experience.

1.6 FIELD MEASUREMENTS

A. Verify field measurements are as indicated on Drawings.

1.7 COORDINATION

A. Where wire and cable destination is indicated and routing is not shown, determine routing and lengths required.

1.8 BUILDING WIRE

A. Manufacturers:
   1. Diamond Wire & Cable Co.
   2. Essex Group Inc.
   3. General Cable Co.
   4. Engineer approved equal

B. Product Description: Single conductor insulated wire.

C. Conductor: Copper.

D. Insulation: NFPA 70; THHN/THWN insulation.

PART 2 - EXECUTION

2.1 EXAMINATION

A. Verify interior of building has been protected from weather.

B. Verify mechanical work likely to damage wire and cable has been completed.

C. Verify raceway installation is complete and supported.

2.2 PREPARATION

A. Completely and thoroughly swab raceway before installing wire.

2.3 INSTALLATION

A. Route wire and cable to meet Project conditions.

B. All electrical wiring and cable, including HVAC control and thermostat cables, shall be installed in conduit or other approved raceway.

C. Neatly train and lace wiring inside boxes, equipment, and panel boards.

D. Identify and color code wire and cable under provisions of Section 16075. Identify each conductor with its circuit number or other designation indicated.

E. Special Techniques--Building Wire in Raceway:
   1. Pull conductors into raceway at same time.
   2. Install building wire 4 AWG and larger with pulling equipment.
   3. Use pulling compound to install wiring in raceways.

F. Special Techniques - Wiring Connections:
   1. Clean conductor surfaces before installing lugs and connectors.
   2. Make splices, taps, and terminations to carry full ampacity of conductors with no perceptible temperature rise.
   3. Tape uninsulated conductors and connectors with electrical tape to 150 percent of insulation rating of conductor.
   4. Install split bolt connectors for copper conductor splices and taps, 6 AWG and larger.
   5. Install solderless pressure connectors with insulating covers for copper conductor splices and taps, 8 AWG and smaller.
   6. Install insulated spring wire connectors with plastic caps for copper conductor splices and taps, 10 AWG and smaller.
   7. Install solid conductor for feeders and branch circuits 10 AWG and smaller.

2.4 WIRE COLOR

A. General:
   1. For wire sizes 10 AWG and smaller, install wire colors in accordance with the following:
      a. Black, red, and blue for circuits at 120/208 volts single or three phase, wye systems.
      b. Three-way and four-way switch travelers shall be purple or lavender. Switch leg conductors shall be color coded different from the traveler conductors and the phase conductors of the system. The color used for switch leg conductors shall be the same throughout the project. The color used for traveler conductors shall be the same throughout the project.
   2. For wire sizes 8 AWG and larger, identify wire with colored tape at terminals, splices and boxes. Colors are as follows:
      a. Black, red, and blue for circuits at 120/208 volts single or three phase.

B. Neutral Conductors: White or gray per NEC. When two or more neutrals are located in one conduit, individually identify each with proper circuit number, or use gray wire for one or more of the neutrals.

C. Branch Circuit Conductors: Install three or four wire home runs with each phase uniquely color coded per Part A above.

D. Feeder Circuit Conductors: Uniquely color code each phase per Part A above.

E. Ground Conductors:
   1. For 6 AWG and smaller: Green.
   2. For 4 AWG and larger: Identify with green tape at both ends and visible points including junction boxes.

END OF SECTION

SECTION 16130

RACEWAY AND BOXES

PART 1 - GENERAL

1.1 SUMMARY

A. Project Identification Section includes conduit and tubing, surface raceways, wireways, outlet boxes, pull and junction boxes, and handholes.

1.2 RELATED SECTIONS

A. Section 16010 – Basic Electrical Requirements

B. Section 16060 - Grounding and Bonding

C. Section 16070 - Electrical Hangers and Supports

D. Section 16075 - Electrical Identification

1.3 REFERENCES

A. American National Standards Institute:
1. ANSI C80.1 - Rigid Steel Conduit, Zinc Coated
2. ANSI C80.3 - Specification for Electrical Metallic Tubing, Zinc Coated

B. National Electrical Manufacturers Association:
1. NEMA 250 - Enclosures for Electrical Equipment (1000 Volts Maximum)
2. NEMA FB 1 - Fittings, Cast Metal Boxes, and Conduit Bodies for Conduit and Cable Assemblies
3. NEMA OS 1 - Sheet Steel Outlet Boxes, Device Boxes, Covers, and Box Supports
4. NEMA RN 1 - Polyvinyl Chloride (PVC) Externally Coated Galvanized Rigid Steel Conduit and Intermediate Metal Conduit
5. NEMA TC 2 - Electrical Polyvinyl Chloride (PVC) Tubing and Conduit
6. NEMA TC 3 - PVC Fittings for Use with Rigid PVC Conduit and Tubing

1.4 SYSTEM DESCRIPTION

A. Raceway and boxes located as indicated on Drawings, and at other locations required for splices, taps, wire pulling, equipment connections, and compliance with regulatory requirements. Raceway and boxes are shown in approximate locations unless dimensioned. Provide raceway to complete wiring system.

B. Underground More than 5 feet outside Foundation Wall: Schedule 40 PVC, nonmetallic conduit unless noted otherwise on the drawings. Provide cast metal boxes or nonmetallic handholes or other pull boxes as scheduled on the drawings.

C. Underground within 5 feet from Foundation Wall or edge of paving: Provide corrosion protected, rigid steel conduit or plastic coated rigid steel conduit unless noted otherwise on the drawings. Provide pull boxes as noted on the drawings.

D. In or Under Slab on Grade: Provide corrosion protected rigid steel conduit or plastic coated rigid steel conduit. Provide cast metallic boxes.

E. Outdoor Locations, Above Grade: Provide rigid steel conduit unless specifically noted otherwise on the drawings. Provide cast metal outlet, pull, and junction boxes.

F. In Slab Above Grade: Provide corrosion protected rigid steel conduit or Schedule 40 PVC nonmetallic conduit. Provide cast boxes.

G. Wet and Damp Locations: Provide rigid steel conduit unless specifically noted otherwise on the drawings. Provide cast metal outlet, junction, and pull boxes. Provide flush mounting outlet box in finished areas.

H. Concealed Dry Locations: Provide electrical metallic tubing. Provide sheet-metal boxes. Provide flush mounting outlet box in finished areas. Provide hinged enclosure for pull boxes larger than 4” square.

I. Exposed Dry Locations: Provide electrical metallic tubing. In shop area provide rigid metal conduit in all areas below 8 feet above finished floor. Provide sheet-metal boxes. Provide flush mounting outlet box in finished areas. Provide hinged enclosure for pull boxes larger that 4” square.

1.5 DESIGN REQUIREMENTS

A. Minimum Raceway Size: ¾ inch unless otherwise specified.

B. Minimum Underground Raceway Size: 1” unless otherwise specified.

1.6 SUBMITTALS

A. Product Data: Submit for the following:
1. Metal conduit, all types
2. Flexible metal conduit
3. Liquid tight flexible metal conduit
4. Nonmetallic conduit
5. Raceway fittings, all types
6. Conduit bodies
7. Wireway
8. Pull and junction boxes

B. Manufacturer's Installation Instructions: Submit application conditions and limitations of use stipulated by Product testing agency specified under Regulatory Requirements. Include instructions for storage, handling, protection, examination, preparation, and installation of Product.

1.7 DELIVERY, STORAGE, AND HANDLING

A. Protect conduit from corrosion and entrance of debris by storing above grade. Provide appropriate covering.

B. Protect PVC conduit from sunlight.

1.8 COORDINATION

A. Coordinate installation of outlet boxes for equipment connected under Section 16150.

B. Coordinate mounting heights, orientation and locations of outlets mounted above counters, benches, and backsplashes.

PART 2 - PRODUCTS

2.1 METAL CONDUIT

A. Rigid Steel Conduit: ANSI C80.1

B. Fittings and Conduit Bodies: NEMA FB 1 all steel threaded fittings. Do not use thread-less connectors for rigid steel conduit.

2.2 PVC COATED METAL CONDUIT

A. Product Description: NEMA RN 1; rigid steel conduit with external PVC coating, 20 mil thick.

B. Fittings and Conduit Bodies: NEMA FB 1; steel fittings with external PVC coating to match conduit.

2.3 FLEXIBLE METAL CONDUIT

A. Product Description: Interlocked steel construction.

B. Fittings: NEMA FB 1.

2.4 LIQUID-TIGHT FLEXIBLE METAL CONDUIT

A. Product Description: Interlocked steel construction with PVC jacket, type LFMC.

B. Fittings: NEMA FB 1

2.5 ELECTRICAL METALLIC TUBING (EMT)

A. Product Description: ANSI C80.3; galvanized tubing.

B. Fittings and Conduit Bodies: NEMA FB 1; steel compression type only. **Do not use set screw fittings.**

2.6 NON-METALLIC CONDUIT

A. Product Description: NEMA TC 2; Schedule 40 PVC or Schedule 80 PVC as noted on the drawings.

B. Fittings and Conduit Bodies: NEMA TC 3.

2.7 SURFACE METAL RACEWAY

A. Product Description: Sheet metal channel with fitted cover, suitable for use as surface metal raceway.

B. Finish: Gray enamel.

C. Fittings, Boxes, and Extension Rings: Furnish Manufacturer's standard accessories; match finish on raceway.

2.8 OUTLET BOXES

A. Sheet Metal Outlet Boxes: NEMA OS 1, galvanized steel.
1. Luminaires and Equipment Supporting Boxes: Rated for weight of equipment supported; furnish 1/2 inch male fixture studs where required.
2. Concrete Ceiling Boxes: Concrete type.

B. Cast Boxes: NEMA FB 1, Type FD, cast ferroalloy. Furnish gasketed cover by box Manufacturer. Furnish threaded hubs.

C. Wall Plates for Finished Areas: As specified in Section 16140.

D. Wall Plates for Unfinished Areas: As specified in Section 16140.

E. Wall Plates for Exterior Areas: Furnish covers with gaskets. Furnish with “in-use” covers.

PART 3 - EXECUTION

3.1 EXAMINATION

A. Verify outlet locations and routing and termination locations of raceway prior to rough-in.

3.2 INSTALLATION

A. Ground and bond raceway and boxes in accordance with Section 16060.

B. Fasten raceway and box supports to structure and finishes.

C. Identify raceway and boxes in accordance with Section 16075.

D. Arrange raceway and boxes to maintain headroom and present neat appearance.

3.3 INSTALLATION - RACEWAY

A. Raceway routing is shown in approximate locations unless dimensioned. Route to complete wiring system.

B. Arrange raceway supports to prevent misalignment during wiring installation.

C. Support raceway using coated steel or malleable iron straps, lay-in adjustable hangers, clevis hangers, and split hangers in accordance with Section 16070.

D. Group related raceway; support using conduit rack. Construct rack using steel channel.

E. Do not support raceway with wire or perforated pipe straps. Remove wire used for temporary supports

F. Do not attach raceway to ceiling support wires or other piping systems.

G. Route exposed raceway parallel and perpendicular to walls.

H. Route raceway installed above accessible ceilings parallel and perpendicular to walls.

I. Maximum of 6’ length for above ceiling, flexible raceway connections to light fixtures.

J. Maximum of 2’ length for final, flexible raceway connection to equipment.

K. Route conduit in and under slab from point-to-point.

L. Maintain clearance between raceway and piping for maintenance purposes.

M. Maintain 12 inch clearance between raceway and surfaces with temperatures exceeding 104 degrees F.

N. Cut conduit square using saw or pipe cutter; de-burr cut ends.

O. Bring conduit to shoulder of fittings; fasten securely.

P. Join nonmetallic conduit using cement as recommended by Manufacturer. Wipe nonmetallic conduit dry and clean before joining. Apply full even coat of cement to entire area inserted in fitting. Allow joint to cure for minimum 20 minutes.

Q. Install conduit hubs or sealing locknuts to fasten conduit to sheet metal boxes in damp and wet locations and to cast boxes.

R. Install no more than equivalent of four 90 degree bends between boxes. Install conduit bodies to make sharp changes in direction, as around beams.

S. Avoid moisture traps; install junction box with drain fitting at low points in conduit system.

T. Install fittings to accommodate expansion and deflection where raceway crosses control and expansion joints.

U. Install suitable pull string or cord in each empty raceway except sleeves and nipples.

V. Install suitable caps to protect installed conduit against entrance of dirt and moisture.

W. Surface Raceway: Install flat-head screws, clips, and straps to fasten raceway channel to surfaces; mount plumb and level. Install insulating bushings and inserts at connections to outlets and corner fittings.

X. Close ends and unused openings in wireway.

3.4 INSTALLATION - BOXES

A. Install wall mounted boxes at elevations to accommodate mounting heights as indicated on Drawings or as specified in section for outlet device.

B. Install flush mounted outlet and fixture boxes for all interior or exterior devices or fixtures installed in finished walls and ceilings. Surface boxes will only be allowed in unfinished, open structure areas.

C. Adjust box location prior to rough-in to accommodate intended purpose.

D. Orient boxes to accommodate wiring devices oriented as specified in Section 16140.

E. Install pull boxes and junction boxes above accessible ceilings and in unfinished areas only.

F. In Accessible Ceiling Areas: Install outlet and junction boxes no more than 6 inches from ceiling access panel or from removable recessed luminaire.

G. Locate flush mounting box in masonry wall to require cutting of masonry unit corner only. Coordinate masonry cutting to achieve neat opening.

H. Do not install flush mounting box back-to-back in walls; install with minimum 6 inches separation. Install with minimum 24 inches separation in acoustic rated walls.

I. Secure flush mounting box to interior wall and partition studs. Accurately position to allow for surface finish thickness.

J. Install stamped steel bridges to fasten flush mounting outlet box between studs.

K. Install flush mounting box without damaging wall insulation or reducing its effectiveness.

L. Install adjustable steel channel fasteners for hung ceiling outlet box.

M. Do not fasten boxes to ceiling support wires or other piping systems.

N. Support boxes independently of conduit.

O. Install gang box where more than one device is mounted together. Do not use sectional box.

P. Install gang box with plaster ring for single device outlets.

Q. Install large enclosures with hinged covers so that cover can be opened a minimum of 90 degrees without obstructions and so that all cover clamps and screws are accessible.

3.5 INTERFACE WITH OTHER PRODUCTS

A. Route conduit through roof openings for piping and ductwork or through suitable roof jack with pitch pocket.

B. Locate outlet boxes to allow luminaires positioned as indicated on reflected ceiling plan.

C. Align adjacent wall mounted outlet boxes for switches, thermostats, and similar devices.

3.6 ADJUSTING

A. Adjust flush-mounting outlets to make front flush with finished wall material.

B. Install knockout closures in unused openings in boxes.

3.7 CLEANING

A. Clean interior of boxes to remove dust, debris, and other material.

B. Clean exposed surfaces and restore finish.

END OF SECTION

SECTION 16140

ELECTRICAL WIRING DEVICES

PART 1 - GENERAL

1.1 SUMMARY

A. Section includes wall switches; receptacles; multi outlet assembly; and device plates and decorative box covers.

B. Related Sections:
1. Section 16010 – Basic Electrical Requirements
2. Section 16130 - Raceway and Boxes: Outlet boxes for wiring devices

1.2 REFERENCES

A. National Electrical Manufacturers Association:
1. NEMA WD 1 - General Requirements for Wiring Devices
2. NEMA WD 6 - Wiring Devices-Dimensional Requirements

1.3 SUBMITTALS

A. Product Data: Submit Manufacturer's catalog information showing dimensions, colors, and configurations.

1.4 QUALIFICATIONS

A. Manufacturer: Company specializing in manufacturing products specified in this section with minimum three years experience.

PART 2 - PRODUCTS

2.1 WALL SWITCHES

A. Manufacturers:
1. Hubbell
2. Pass and Seymour
3. Leviton

B. Product Description: NEMA WD 1, Heavy-Duty AC only general-use snap switch.

C. Body and Handle: Ivory plastic with toggle handle unless alternate color is specified on the drawings.

D. Ratings: Match branch circuit and load characteristics.

2.2 RECEPTACLES

A. Manufacturers:

1. Hubbell
2. Pass and Seymour
3. Leviton

B. Product Description: NEMA WD 1, Heavy-duty general use receptacle.

C. Device Body: Ivory plastic unless alternate color is specified on the drawings. Provide ivory colored duplex outlets with orange dot at dedicated, isolated ground electrical outlets.

D. Convenience Receptacle: 20 amp, Type 5-20R.

E. GFCI Receptacle: Convenience receptacle with integral ground fault circuit interrupter to meet regulatory requirements.

F. Power receptacles shall be commercial grade as a minimum and shall be sized as specified on the drawings.

2.3 WALL PLATES

A. Manufacturers:
1. Hubbell
2. Pass and Seymour
3. Leviton

B. Decorative Cover Plate: Ivory nylon for all flush mounted switches, receptacles, and other devices specified on the drawings. Receptacles or switches installed on open framed walls shall be installed in 4” boxes with industrial raised face covers.

C. Jumbo Decorative Cover Plate: Ivory nylon plates for all flush mounted switches or devices specified on the drawings.

D. Weatherproof Cover Plate: Gasketed cast metal plate with hinged and gasketed device cover unless a gasketed, in-use type cover is specified on the drawings

PART 3 - EXECUTION

3.1 EXAMINATION

A. Verify outlet boxes are installed at proper height.

B. Verify wall openings are neatly cut and completely covered by wall plates.

C. Verify branch circuit wiring installation is completed, tested, and ready for connection to wiring devices.

3.2 PREPARATION

A. Clean debris from outlet boxes.

3.3 INSTALLATION

A. Install devices plumb and level.

B. Install switches with OFF position down.

C. Install receptacles with grounding pole on bottom.

D. Connect wiring device grounding terminal to branch circuit equipment grounding conductor.

E. Install decorative plates on switch, receptacle, and blank outlets in finished areas.

F. Install raised cover galvanized steel plates on outlet boxes and junction boxes in unfinished areas, above accessible ceilings, and on surface mounted outlets.

3.4 INTERFACE WITH OTHER PRODUCTS

A. Coordinate locations of outlet boxes provided under Section 16130 to obtain mounting heights as specified and as indicated on drawings.

B. Install wall switch 48 inches above finished floor.

C. Install convenience receptacle and voice/data outlets 18 inches above finished floor or as noted on the drawings.

D. Install convenience receptacle and voice/data outlets 6 inches above counters or as noted on the drawings.

E. Install voice/data outlets for wall mounted telephone 48 inches above finished floor or as noted on the drawings.

3.5 FIELD QUALITY CONTROL

A. Inspect each wiring device for defects.

B. Operate each wall switch with circuit energized and verify proper operation.

C. Verify each receptacle device is energized.

D. Test each receptacle device for proper polarity.

E. Test each GFCI receptacle device for proper operation.

3.6 ADJUSTING

A. Adjust devices and wall plates to be flush and level.

3.7 CLEANING

A. Clean exposed surfaces to remove splatters and restore finish.

END OF SECTION

SECTION 16150

WIRING CONNECTIONS

PART 1 - GENERAL

1.1 SUMMARY

A. Section includes electrical connections to equipment.

B. Related Sections:
1. Section 16010 – Basic Electrical Requirements
2. Section 16123 - Building Wire and Cable
3. Section 16130 - Raceway and Boxes

1.2 REFERENCES

A. National Electrical Manufacturers Association:
1. NEMA WD 1 - General Requirements for Wiring Devices
2. NEMA WD 6 - Wiring Devices-Dimensional Requirements

1.3 SUBMITTALS

A. Product Data: Submit wiring device Manufacturer’s catalog information showing dimensions, configurations, and construction.

B. Provide complete Manufacturer's installation instructions.

1.4 COORDINATION

A. Obtain and review shop drawings, product data, Manufacturer’s wiring diagrams, and Manufacturer's instructions for equipment furnished under other sections.

B. Determine connection locations and requirements.

C. Sequence rough-in of electrical connections to coordinate with installation of equipment.

D. Sequence electrical connections to coordinate with start-up of equipment.

PART 2 - PRODUCTS

2.1 CORD AND PLUGS

A. Attachment Plug Construction: Conform to NEMA WD 1.

B. Configuration: NEMA WD 6; match receptacle configuration at outlet furnished for equipment.

C. Cord Construction: Type SO multi conductor flexible cord with identified equipment grounding conductor, suitable for use in damp locations.

D. Size: Suitable for connected load of equipment, length of cord, and rating of branch circuit over current protection.

PART 3 - EXECUTION

3.1 EXAMINATION

A. Verify equipment is ready for electrical connection, for wiring, and to be energized.

3.2 INSTALLATION

A. Make all line voltage electrical connections.

B. Make conduit connections to equipment using flexible metal conduit. Use liquid-tight flexible metal conduit with watertight connectors in damp or wet locations. Flexible conduit length to equipment is limited to 2 feet. Support flexible conduit.

C. Connect heat producing equipment using wire and cable with insulation suitable for temperatures encountered.

D. Install receptacle outlet to accommodate connection with attachment plug.

E. Install cord and cap for field-supplied attachment plug.

F. Install suitable strain-relief clamps and fittings for cord connections at outlet boxes and equipment connection boxes.

G. Install disconnect switches, controllers, control stations, and control devices to complete equipment wiring requirements.

H. Install terminal block jumpers to complete equipment wiring requirements.

I. Install interconnecting conduit and wiring between devices and equipment to complete equipment wiring requirements.

3.3 ADJUSTING

A. Cooperate with utilization equipment Installers and field service personnel during checkout and starting of equipment to allow testing and balancing and other startup operations. Provide personnel to operate electrical system and checkout wiring connection components and configurations

END OF SECTION

SECTION 16210

ELECTRICAL UTILITY SERVICES

PART 1 - GENERAL

1.1 SUMMARY

A. Section includes arrangement with Utility Company for permanent electric service; payment of Utility Company charges for service; service provisions; and utility metering equipment.

1.2 RELATED SECTIONS

A. 16010 – Basic Electrical Requirements

1.3 SYSTEM DESCRIPTION

A. Utility Company: Oncor

B. System Characteristics: 208Y/120 volt, 3 phase, 4 wire, 60 hertz

C. Service Entrance: Underground

1.4 QUALITY ASSURANCE

A. Perform work in accordance with Utility Company written requirements.

B. Maintain one copy of each document on site.

1.5 FIELD MEASUREMENTS

A. Verify field measurements are as indicated on Drawings.

1.6 COORDINATION

A. Contact Utility Company regarding charges related to service installation. Include utility charges in this contract.

PART 2 - PRODUCTS

2.1 TRANSFORMER PAD

A. Furnish in accordance with Utility Company requirements.

2.2 UTILITY METERS

A. Furnished by Utility Company.

2.3 UTILITY METER BASE

A. Provide, mount, and connect in accordance with Utility Company's requirements and the project drawings.

2.4 CURRENT TRANSFORMER ENCLOSURE AND EQUIPMENT

A. Provide, mount, and connect in accordance with Utility Company's requirements and the project drawings.

PART 3 - EXECUTION

3.1 EXAMINATION

A. Verify service equipment is ready to be connected and energized.

END OF SECTION

SECTION 16235

ENGINE GENERATORS

PART 1 - GENERAL

1.1 SUMMARY

A. Section includes engine generator set, exhaust silencer and fittings, transfer switch, fuel fittings, remote control panel, battery, and charger.

B. RELATED SECTIONS
1. 16010 – Basic Electrical Requirements
2. 16060 – Grounding and Bonding
3. 16075 – Electrical Identification

1.2 REFERENCES

A. National Electrical Manufacturers Association:
1. NEMA 250 - Enclosures for Electrical Equipment (1000 Volts Maximum)
2. NEMA AB 1 - Molded Case Circuit Breakers and Molded Case Switches
3. NEMA ICS 10 - Industrial Control and Systems: AC Transfer Switch Equipment
4. NEMA MG 1 - Motors and Generators

B. National Fire Protection Association:
1. NFPA 110 - Standard for Emergency and Standby Power Systems

1.3 SYSTEM DESCRIPTION

A. Description: Engine generator assembly and accessories to provide source of power for application in accordance with NFPA 110.

B. Capacity: 20 kW, 24 kVA at elevation of 3300 feet above sea level, standby rating using specified engine cooling scheme.

1.4 SUBMITTALS

A. Shop Drawings: Indicate electrical characteristics and connection requirements. Include plan and elevation views with overall and interconnection point dimensions, fuel consumption rate curves at various loads, ventilation and combustion air requirements, electrical diagrams including schematic and interconnection diagrams.

B. Product Data: Submit data showing dimensions, weights, ratings, interconnection points, and internal wiring diagrams for engine, generator, control panel, transfer switch, battery, battery rack, battery charger, exhaust silencer, and vibration isolators.

C. Test Reports: Indicate results of performance testing.

D. Manufacturer's Field Reports: Indicate inspections, findings, and recommendations.

1.5 CLOSEOUT SUBMITTALS

A. Operation and Maintenance Data: Submit instructions and service manuals for normal operation, routine maintenance, oil sampling and analysis for engine wear, and emergency maintenance procedures.

1.6 QUALIFICATIONS

A. Manufacturer: Company specializing in manufacturing products specified in this section with minimum three years.

1.7 WARRANTY

A. Furnish parts and labor warranty for 12 months after final acceptance of the system.

1.8 MAINTENANCE MATERIALS

A. Furnish one set of tools required for preventative maintenance of engine generator system. Package tools in adequately sized metal tool box.

B. Furnish two of each fuel, oil and air filter element.

PART 2 - PRODUCTS

2.1 SERVICE CONDITIONS

A. Temperature: 100 degrees F.

B. Altitude: 3,300 feet.

2.2 ENGINE

A. Manufacturers:
1. Generac
2. Cummins
3. Stewart & Stevenson.
4. Onan
5. Approved equal

B. Product Description: Water-cooled in-line or V-type, four-stroke cycle internal combustion engine.

C. Rating: Sufficient to operate under 10 percent overload for one hour in ambient of 100 degrees F at elevation of 3300 feet.

D. Fuel System: No. 2 Fuel Oil (Diesel)

E. Engine speed: 3600 rpm.

F. Safety Devices: Engine shutdown on high water temperature, low oil pressure, over speed, and engine over crank. Limits as selected by Manufacturer.

G. Engine Starting: DC starting system with positive engagement, number and voltage of starter motors in accordance with Manufacturer's instructions. Furnish remote starting control circuit, with MANUAL-OFF-REMOTE selector switch on engine-generator control panel.

H. Engine Jacket Heater: Thermal circulation type water heater with integral thermostatic control, sized to maintain engine jacket water at 90 degrees F, and suitable for operation on 120 volts AC.

I. Radiator: Radiator using glycol coolant, with blower type fan, sized to maintain safe engine temperature in ambient temperature of 110 degrees F. Radiator air flow restriction 0.5 inches of water maximum.

J. Engine Accessories: Fuel filter, lube oil filter, intake air filter, lube oil cooler, fuel transfer pump, fuel priming pump, gear-driven water pump. Furnish water temperature gage and lube oil pressure gage on engine/generator control panel.

K. Mounting: Furnish unit with suitable spring-type vibration isolators and mount on structural steel base.

2.3 GENERATOR

A. Manufacturers:
1. Generac
2. Cummins
3. Stewart & Stevenson
4. Onan
5. Approved equal

B. Product Description: NEMA MG1, three phase, four pole, re-connectable brushless synchronous generator with brushless exciter.

C. Rating 20 kW, 24 kVA, at 0.8 power factor, 208Y/120 volts, 3 phase, 4 wire, 60 Hz.

D. Insulation Class: F.

E. Temperature Rise: 130 degrees C Standby.

F. Enclosure: NEMA MG1, open drip proof.

G. Voltage Regulation: Furnish generator mounted volts per hertz exciter-regulator to match engine and generator characteristics, with voltage regulation plus or minus 1 percent from no load to full load. Furnish manual controls to adjust voltage droop, voltage level (plus or minus 5 percent) and voltage gain.

2.4 GOVERNOR

A. Product Description: Electronic governor to maintain engine speed within 0.5 percent, steady state, and 5 percent, no load to full load, with recovery to steady state within 2 seconds following sudden load changes. Equip governor with means for manual operation and adjustment.

2.5 AUTOMATIC TRANSFER SWITCH

A. Manufacturers:
1. Generac
2. Cummins
3. Stewart & Stevenson
4. Onan
5. Approved equal

B. Product Description: NEMA ICS 10, automatic transfer switch.

C. Configuration: Electrically operated, mechanically held transfer switch.

D. Interrupting Capacity: 100 percent of continuous rating.

E. Withstand Current Rating: 50,000 rms symmetrical amperes, when used with molded case circuit breaker.

F. Control Features and Functions:
1. Indicating Lights: Mount in cover of enclosure to indicate NORMAL SOURCE AVAILABLE, ALTERNATE SOURCE AVAILABLE, switch position.
2. Test Switch: Mount in cover of enclosure to simulate failure of normal source.
3. Return to Normal Switch: Mount in cover of enclosure to initiate manual transfer from alternate source to normal source.
4. Transfer Switch Auxiliary Contacts: 1 normally open; 1 normally closed.
5. Normal Source Monitor: Monitor each line of normal source voltage and frequency; initiate transfer when voltage drops below 85 percent or frequency varies more than 3 percent from rated nominal value.
6. Alternate Source Monitor: Monitor alternate source voltage and frequency; inhibit transfer when voltage is below 85 percent or frequency varies more than 3 percent from rated nominal value.
7. Switched Neutral: Overlapping contacts.

G. Automatic Sequence of Operation:
1. Initiate Time Delay to Start Alternate Source Engine Generator: Upon initiation by normal source monitor.
2. Time Delay To Start Alternate Source Engine Generator: 0 to 30 seconds, adjustable.
3. Initiate Transfer Load to Alternate Source: Upon initiation by normal source monitor and permission by alternate source monitor.
4. Time Delay Before Transfer to Alternate Power Source: 0 to 30 seconds, adjustable.

5. Initiate Retransfer Load to Normal Source: Upon permission by normal source monitor.
6. Time Delay Before Transfer to Normal Power: 0 to 30 seconds, adjustable; bypass time delay in event of alternate source failure.

H. Time Delay Before Engine Shut Down: 0 to 30 minutes, adjustable, of unloaded operation.

I. Engine Exerciser: Start engine every 7 days; run for 30 minutes before shutting down. Bypass exerciser control when normal source fails during exercising period.

J. Enclosure:
1. Enclosure: ICS 10, Type 1
2. Finish: Manufacturer's standard gray enamel

2.6 ACCESSORIES

A. Skid-Mounted Fuel Tank: Double wall, Steel base tank, with fill and vent and low fuel alarm, sized for 48 hours full load operation.

B. Exhaust Silencer: Critical type silencer, with muffler companion flanges and flexible stainless steel exhaust fitting, sized in accordance with engine Manufacturer's instructions.

C. Batteries: Heavy duty, diesel starting type, lead-acid storage batteries, 170 ampere-hours minimum capacity. Match battery voltage to starting system. Furnish cables and clamps.

D. Battery Tray: Treated for electrolyte resistance, constructed to contain spillage.

E. Battery Charger: Current limiting type designed to float at 2.17 volts for each cell and equalize at 2.33 volts for each cell. Furnish overload protection, full wave rectifier, DC voltmeter and ammeter, and 120 volts AC fused input. Furnish wall mounted enclosure to meet NEMA 250, Type 1 requirements.

F. Line Circuit Breaker: NEMA AB 1 molded case circuit breaker on generator output with integral thermal and instantaneous magnetic trip in each pole. Furnish battery voltage operated shunt trip, connected to open circuit breaker on engine failure. Unit mounts in enclosure to meet NEMA 250, Type 1 requirements.

G. Engine-Generator Control Panel: NEMA 250, Type 1 generator-mounted control panel enclosure with engine and generator controls and indicators. Furnish provision for padlock and the following equipment and features:
1. Frequency Meter: 45-65 Hz. range, 3.5 inch dial
2. AC Output Voltmeter: 3.5 inch dial, 2 percent accuracy, with phase selector switch
3. AC Output Ammeter: 3.5 inch dial, 2 percent accuracy, with phase selector switch
4. Output voltage adjustment
5. Push-to-test indicator lamps, one each for low oil pressure, high water temperature, over speed, low fuel level, and over crank

6. Engine start/stop selector switch
7. Engine running time meter
8. Oil pressure gage
9. Water temperature gage
10. Auxiliary Relay: 3PDT, operates when engine runs, with contact terminals pre-wired to terminal strip
11. Additional visual indicators and alarms in accordance with by NFPA 110
12. Remote Alarm Contacts: Factory wire SPDT contacts to terminal strip for remote alarm functions in accordance with NFPA 110

H. Remote Annunciator Panel: Flush mounted panel with brushed stainless steel finish. Furnish audible and visible indicators and alarms in accordance with NFPA 110.

I. Weather-protective Enclosure: Reinforced steel housing allowing access to control panel and service points, with lockable doors and panels. Furnish fixed louvers, fuel tank, battery rack, and silencer.

2.7 SOURCE QUALITY CONTROL

A. Provide shop inspection and testing of completed assembly.

PART 3 - EXECUTION

3.1 INSTALLATION

A. Install engraved plastic nameplates in accordance with Section 16075.

B. Install Generator Set on concrete pad detailed in the plans. Anchor base frame to pad in accordance with Manufacturer’s recommendations.

C. Ground and bond generator and other electrical system components in accordance with Section 16060.

3.2 MANUFACTURER'S FIELD SERVICES

A. Before the work is accepted, an authorized representative of the Manufacturer shall personally inspect the installation and operation of the equipment to determine that it is properly installed and in proper operating order. The qualifications of the representative shall be appropriate to the technical requirements of the installation and shall be submitted to the owner for approval. The decision of the owner concerning the appropriateness of the representative shall be final. Testing and checking shall be accomplished during the course of the work where required by work being concealed, and at the completion of the work otherwise. In addition, the Contractor shall submit to the Design Engineer a signed statement from the representative certifying as follows: “I certify that the materials and/or equipment listed below have been personally inspected by the undersigned authorized Manufacturer’s representative and is properly installed and operating in accordance with the Manufacturer’s recommendations”.

B. Start-up of the equipment shall be performed by the authorized representative of the Manufacturer.

3.3 ADJUSTING

A. Adjust generator output voltage and engine speed to meet specified ratings.

3.4 CLEANING

A. Clean engine and generator surfaces. Replace oil and fuel filters with new.

3.5 DEMONSTRATION AND TRAINING

A. Furnish 8 hours of instruction each for two persons, to be conducted at project site with Manufacturer's representative.

B. Simulate power outage by interrupting normal source, and demonstrate system operates to provide standby power.

END OF SECTION

SECTION 16411

ENCLOSED SWITCHES

PART 1 - GENERAL

1.1 SUMMARY

A. Section includes fusible and non-fusible switches.

B. Related Sections:
1. Section 16010 - Basic Electrical Requirements
2. Section 16060 - Grounding and Bonding
3. Section 16075 - Electrical Identification
4. Section 16491 - Fuses

1.2 REFERENCES

A. National Electrical Manufacturers Association:
1. NEMA FU 1 - Low Voltage Cartridge Fuses
2. NEMA KS 1 - Enclosed and Miscellaneous Distribution Equipment Switches (600 Volts Maximum)

B. International Electrical Testing Association:
1. NETA ATS - Acceptance Testing Specifications for Electrical Power Distribution Equipment and Systems.

1.3 SUBMITTALS

A. Product Data: Submit switch ratings and enclosure dimensions.

1.4 QUALIFICATIONS

A. Manufacturer: Company specializing in manufacturing products specified in this section with minimum three years documented experience.

PART 2 - PRODUCTS

2.1 FUSIBLE SWITCH ASSEMBLIES

A. Manufacturers:
1. GE Electrical
2. Cutler Hammer
3. Square D

B. Product Description: NEMA KS 1, Type HD, horsepower rated enclosed load interrupter knife switch. Handle lockable in OFF position.

C. Fuse clips: Designed to accommodate NEMA FU 1, Class R fuses.

D. Enclosure: NEMA KS 1, to meet conditions. Fabricate enclosure from steel finished with Manufacturer's standard gray enamel.

1. Interior Dry Locations: Type 1
2. Exterior Locations: Type 3R

E. Service Entrance: Switches identified for use as service equipment are to be labeled for this application. Furnish solid neutral assembly and equipment ground bar.

F. Furnish switches with entirely copper current carrying parts.

2.2 NONFUSIBLE SWITCH ASSEMBLIES

A. Manufacturers:
1. GE Electrical
2. Cutler Hammer
3. Square D

B. Product Description: NEMA KS 1, Type HD, horsepower rated enclosed load interrupter knife switch. Handle lockable in OFF position.

C. Enclosure: NEMA KS 1, to meet conditions. Fabricate enclosure from steel finished with Manufacturer's standard gray.
1. Interior Dry Locations: Type 1
2. Exterior Locations: Type 3R

D. Service Entrance: Switches identified for use as service equipment are to be labeled for this application. Furnish solid neutral assembly and equipment ground bar.

E. Furnish switches with entirely copper current carrying parts.

2.3 SWITCH RATINGS

A. Switch Rating: Horsepower rated for AC or DC as indicated on Drawings.

B. Short Circuit Current Rating: UL listed for 200,000 rms symmetrical amperes when used with or protected by Class R.

PART 3 - EXECUTION

3.1 INSTALLATION

A. Install enclosed switches plumb. Provide supports in accordance with Section 16070.

B. Height: 5 feet to operating handle or as noted on the drawings.

C. Install fuses for fusible disconnect switches. Refer to Section 16491 for product requirements.

D. Install engraved plastic nameplates in accordance with Section 16075.

E. Apply adhesive tag on inside door of each fused switch indicating NEMA fuse class and size installed.

END OF SECTION

SECTION 16442

PANELBOARDS

PART 1 - GENERAL

1.1 SUMMARY

A. Section includes distribution and branch circuit panel boards.

B. Related Sections:
1. Section 16060 - Grounding and Bonding
2. Section 16075 - Electrical Identification
3. Section 16491 - Fuses
4. Section 16010 – Basic Electrical Requirements

1.2 REFERENCES

A. National Electrical Manufacturers Association:
1. NEMA AB 1 - Molded Case Circuit Breakers and Molded Case Switches
2. NEMA PB 1 - Panelboards
3. NEMA PB 1.1 - General Instructions for Proper Installation, Operation, and Maintenance of Panelboards Rated 600 Volts or Less

B. National Fire Protection Association:
1. NFPA 70 - National Electrical Code

C. Underwriters Laboratories Inc.:
1. UL 67 - Safety for Panelboards

1.3 SUBMITTALS

A. Shop Drawings: Indicate outline and support point dimensions, voltage, main bus ampacity, integrated short circuit ampere rating, circuit breaker and fusible switch arrangement and sizes.

B. Product Data: Submit catalog data showing specified features of standard products.

1.4 CLOSEOUT SUBMITTALS

A. Project Record Documents: Record actual locations of panelboards and record actual circuiting arrangements.

B. Operation and Maintenance Data: Submit spare parts listing; source and current prices of replacement parts and supplies; and recommended maintenance procedures and intervals.

1.5 QUALIFICATIONS

A. Manufacturer: Company specializing in manufacturing products specified in this section with minimum three years experience.

1.6 MAINTENANCE MATERIALS

A. Furnish two of each panelboard key. Panelboards keyed alike.

PART 2 - PRODUCTS

2.1 DISTRIBUTION PANELBOARDS

A. Manufacturers:
1. Square D
2. Cutler Hammer
3. General Electric
4. Substitutions: Section 01630 - Product Requirements
5. All distribution panel boards shall be supplied from the same Manufacturer

B. Product Description: NEMA PB 1, circuit breaker type panel board.

C. Service Conditions:
1. Temperature: 100 degrees F
2. Altitude: 200 feet above sea level

D. Panelboard Bus: Copper, current carrying components including main feeder connection lugs, ratings as indicated on Drawings. Furnish copper neutral and copper ground bus in each panelboard. Furnish insulated copper ground bus as indicated on Drawings.

E. Minimum integrated short circuit rating: 25,000 amperes rms symmetrical for 208 volt panel boards or as indicated on Drawings.

F. Molded Case Circuit Breakers: NEMA AB 1, bolt-on, circuit breakers with integral thermal and instantaneous magnetic trip in each pole. Furnish circuit breakers UL listed as Type HACR for air conditioning equipment branch circuits.

G. Circuit Breaker Accessories: Trip units and auxiliary switches as indicated on Drawings.

H. Enclosure: NEMA PB 1, Type 1 in interior areas and Type 3R in exterior areas.

I. Cabinet Front: Surface hinged trim with door and flush lock, metal directory frame, finished in Manufacturer's standard gray enamel. Trim shall have a piano hinge on one side with a door that opens with a single latch.

2.2 BRANCH CIRCUIT PANELBOARDS

A. Manufacturers:
1. GE Electrical Model
2. Cutler Hammer
3. Square D
4. Substitutions: Section 01630 - Product Requirements
5. All branch circuit panel boards shall be supplied from the same Manufacturer

B. Product Description: NEMA PB1, circuit breaker type, lighting and appliance branch circuit panelboard.

C. Panelboard Bus: Copper, current carrying components including main feeder connection lugs, ratings as indicated on Drawings. Furnish copper neutral and copper ground bus in each panel board. Furnish insulated copper ground bus as indicated on Drawings.

D. Minimum Integrated Short Circuit Rating: 10,000 amperes rms symmetrical for 240 volt rated panel boards, or as indicated on Drawings.

E. Molded Case Circuit Breakers: NEMA AB 1, bolt-on type thermal magnetic trip circuit breakers, with common trip handle for all poles, listed as Type SWD for lighting circuits, Type HACR for air conditioning equipment circuits. Do not use tandem circuit breakers.

F. Enclosure: NEMA PB 1, Type 1 in interior areas and Type 3R in exterior areas.

G. Cabinet Front: Supply hinged trim with door and flush lock, metal directory frame finished in Manufacturer's standard gray enamel. Trim shall have a piano hinge on one side with a door that opens with a single latch.

PART 3 - EXECUTION

3.1 INSTALLATION

A. Install panel boards in accordance with NEMA PB 1.1.

B. Install panelboards plumb.

C. Install recessed panelboards flush with wall finishes.

D. Height: 6 feet to top of panel board; install panel boards taller than 6 feet with bottom no more than 4 inches above floor.

E. Install filler plates for unused spaces in panelboards.

F. Provide typed circuit directory for each branch circuit panel board. Revise directory to reflect circuiting changes to balance phase loads.

G. Install engraved plastic nameplates in accordance with Section 16075.

H. Install spare conduits out of each recessed panelboard to accessible location above ceiling. Minimum spare conduits: 3 empty 1 inch. Identify each as SPARE.

I. Ground and bond panelboard enclosure according to Section 16060. Connect equipment ground bars of panels in accordance with latest edition of NFPA 70.

J. Perform switch inspections and tests listed in NETA ATS, Section 7.5.

K. Perform controller inspections and tests listed in NETA ATS, Section 7.16.1.

3.2 ADJUSTING

A. Measure steady state load currents at each panelboard feeder; rearrange circuits in panelboard to balance phase loads to within 20 percent of each other. Maintain proper phasing for multi-wire branch circuits.

END OF SECTION

SECTION 16491

FUSES

PART 1 - GENERAL

1.1 SUMMARY: Section includes fuses.

1.2 RELATED SECTIONS

A. 16010 – Basic Electrical Requirements

B. 16411 - Enclosed Switches

1.3 REFERENCES

A. National Electrical Manufacturers Association:
1. NEMA FU 1 - Low Voltage Cartridge Fuses.

1.4 FUSE PERFORMANCE REQUIREMENTS

A. Main Service Switches Larger than 600 amperes: Class L (fast-acting)

B. Main Service Switches: Class RK5, Dual Element, Time Delay

C. Power Load Feeder Switches: RK5, Dual Element, Time Delay

D. Motor Load Feeder Switches: Class RK1, Low Peak, Dual Element, Time Delay

E. Lighting Load Feeder Switches: RK5, Dual Element, Time Delay

F. Other Feeder Switches: RK5, Dual Element, Time Delay

G. General Purpose Branch Circuits: Class RK1, Low Peak, Dual Element, Time Delay

H. Control Circuits: Supply control circuit fuses per equipment Manufacturer’s recommendations.

1.5 SUBMITTALS

A. Product Data: Submit data sheets showing electrical characteristics, including time-current curves.

1.6 CLOSEOUT SUBMITTALS

A. Project Record Documents: Record actual sizes, ratings, and locations of fuses.

1.7 QUALIFICATIONS

A. Manufacturer: Company specializing in manufacturing products specified in this section with minimum three years experience.

1.8 MAINTENANCE MATERIALS

A. Furnish two fuse pullers for each size fuse on the project.

1.9 EXTRA MATERIALS

A. Furnish six spare fuses of each Class, size, and rating installed.

PART 2 - PRODUCTS

2.1 FUSES

A. Manufacturers:
1. Bussman
2. Shawmut
3. Approved equal

B. Dimensions and Performance: NEMA FU 1, Class as specified or as indicated on Drawings.

C. Voltage: Rating suitable for circuit phase-to-phase voltage.

PART 3 - EXECUTION

3.1 INSTALLATION

A. Install fuse with label oriented so Manufacturer, type, and size are easily read.

END OF SECTION

SECTION 16510

INTERIOR LUMINAIRES

PART 1 - GENERAL

1.1 SUMMARY

A. Section includes interior luminaires, lamps, ballasts, and accessories.

B. Related Sections:
1. Section 16530 - Emergency Lighting
2. Section 16010 – Basic Electrical Requirements

1.2 REFERENCES

A. American National Standards Institute:
1. ANSI C82.1 - American National Standard for Lamp Ballast-Line Frequency Fluorescent Lamp Ballast
2. ANSI C82.4 - American National Standard for Ballasts-for High-Intensity-Discharge and Low-Pressure Sodium Lamps (Multiple-Supply Type)

1.3 SUBMITTALS

A. Shop Drawings: Indicate dimensions and components for each luminaire not standard product of Manufacturer.

B. Product Data: Submit dimensions, ratings, and performance data.

1.4 QUALIFICATIONS

A. Manufacturer: Company specializing in manufacturing products specified in this section with minimum three years experience.

1.5 FIELD MEASUREMENTS

A. Verify field measurements prior to fabrication.

PART 2 - PRODUCTS

2.1 INTERIOR LUMINAIRES

A. Product Description: Complete interior luminaire assemblies, with features, options, and accessories as scheduled.

2.2 FLUORESCENT BALLASTS

A. Product Description: Electronic ballast less than 20 percent THD suitable for lamps specified, with voltage to match luminaire voltage.

2.3 HIGH INTENSITY DISCHARGE (HID) BALLASTS

A. Product Description: ANSI C82.4, metal halide lamp ballast, suitable for lamp specified, with voltage to match luminaire voltage.

2.4 FLUORESCENT LAMPS

A. Manufacturers: All linear fluorescent lamps shall be from the same Manufacturer.
   1. General Electric
   2. Philips
   3. Osram/Sylvania
   4. Substitutions: Section 01630 - Product Requirements

2.5 HID LAMPS

A. Manufacturers: All HID lamps shall be from the same Manufacturer.
   1. General Electric
   2. Philips
   3. Osram/Sylvania
   4. Substitutions: Section 01630 - Product Requirements

PART 3 - EXECUTION

3.1 INSTALLATION

A. Install suspended luminaires using pendants supported from swivel hangers. Install pendant length required to suspend luminaire at indicated height.

B. Support luminaires larger than 2 x 4 foot size independent of ceiling framing.

C. Locate recessed ceiling luminaires as indicated on Drawings.

D. Install surface mounted luminaires plumb and adjust to align with building lines and with each other. Secure to prevent movement.

E. Install recessed luminaires to permit removal from below.

F. Install recessed luminaires using accessories and fire-stopping materials to meet regulatory requirements for fire rating.

G. Install clips to secure recessed grid-supported luminaires in place.

H. Install wall-mounted luminaires at height as indicated on Drawings.

I. Install accessories furnished with each luminaire.

J. Connect luminaires to branch circuit outlets provided under Section 16130 using flexible conduit.

K. Make wiring connections to branch circuit using building wire with insulation suitable for temperature conditions within luminaire.

L. Install specified lamps in each luminaire.

M. Ground and bond interior luminaires in accordance with Section 16060.

3.2 FIELD QUALITY CONTROL

A. Operate each luminaire after installation and connection. Inspect for proper connection and operation.

3.3 ADJUSTING

A. Aim and adjust luminaires.

3.4 CLEANING

A. Remove dirt and debris from enclosures.

B. Clean photometric control surfaces as recommended by Manufacturer.

C. Clean finishes and touch up damage.

3.5 SPARE LAMPS

A. Re-lamp all incandescent or filament type luminaries at Substantial Completion.

B. Provide spare lamps as follows:
1. HID Lamps: Four spare lamps of each size and type
2. Linear Fluorescent: Eight spare lamps of each size, type, and color
3. Compact Fluorescent: Four spare lamps of each size, type, and color
4. Incandescent, Quartz, Halogen: Eight spare lamps of each size and type

3.6 SCHEDULES

A. See schedule on drawings.

END OF SECTION

SECTION 16520

EXTERIOR LUMINAIRES

PART 1 - GENERAL

1.1 SUMMARY

A. Section includes exterior luminaires, poles, and accessories.

1.2 RELATED SECTIONS

A. 16010 – Basic Electrical Requirements

1.3 SUBMITTALS

A. Product Data: Submit dimensions, ratings, and performance data.

1.4 QUALIFICATIONS

A. Manufacturer: Company specializing in manufacturing products specified in this section with minimum three years experience.

1.5 COORDINATION

A. Furnish bolt templates and pole mounting accessories to installer of pole foundations.

PART 2 - PRODUCTS

2.1 LUMINAIRES

A. Product Description: Complete exterior luminaire assemblies, with features, options, and accessories as scheduled on the drawings.

2.2 FLUORESCENT BALLASTS

A. Manufacturers:
   1. Magnetek Inc.
   2. Philips Electronic North America
   3. Advanced
   4. Approved equal

B. Product Description: Electronic ballast certified by Certified Ballast Manufacturers, Inc. to comply with ANSI C82.1, suitable for lamps and environmental conditions specified, with voltage to match luminaire voltage.

2.3 HIGH INTENSITY DISCHARGE (HID) BALLASTS

A. Manufacturers:
1. Magnetek Inc.
2. Philips Electronic North America
3. Advanced
4. Approved equal

B. Product Description: ANSI C82.4, metal halide lamp ballast, suitable for lamp and environmental conditions specified, with voltage to match luminaire voltage.

2.4 FLUORESCENT LAMPS

A. Manufacturers:
1. General Electric Co.
2. Philips Electronics
3. Osram/Sylvania
4. Approved equal

2.5 HID LAMPS

A. Manufacturers:
1. General Electric Co.
2. Philips Electronic
3. Osram/Sylvania
4. Approved equal

2.6 METAL POLES

A. Material and Finish: Steel with polyester powder finish as scheduled in fixture schedule on drawings.

B. Section Shape and Dimensions: Tapered round.

C. Height: As scheduled.

D. Accessories:
1. Handhold
2. Anchor bolts

PART 3 - EXECUTION

3.1 EXAMINATION

A. Verify foundations are ready to receive fixtures.

3.2 INSTALLATION

A. Install concrete bases for lighting poles at locations as indicated on Drawings.

B. Install poles plumb. Grout around each base.

C. Install lamps in each luminaire.

D. Bond and ground luminaires, metal accessories and metal poles in accordance with Section 16060. Install supplementary grounding electrode at each pole.

3.3 FIELD QUALITY CONTROL

A. Operate each luminaire after installation and connection. Inspect for improper connections and operation.

3.4 ADJUSTING

A. Aim and adjust luminaires to provide illumination levels and distribution.

3.5 CLEANING

A. Clean photometric control surfaces as recommended by Manufacturer.

B. Clean finishes and touch up damage.

3.6 PROTECTION OF FINISHED WORK

A. Re-lamp luminaires having failed lamps at Substantial Completion.

3.7 SCHEDULES

A. See schedule on drawings.

END OF SECTION

SECTION 16530

EMERGENCY LIGHTING

PART 1 - GENERAL

1.1 SUMMARY

A. Section includes emergency lighting units and lighted exit signs.

1.2 RELATED SECTIONS

A. 16010 – Basic Electrical Requirements

B. 16510 - Interior Luminaires

1.3 REFERENCES

A. National Electrical Manufacturers Association:
   1. NEMA WD 6 - Wiring Devices-Dimensional Requirements.

1.4 SYSTEM DESCRIPTION

A. Emergency lighting to comply with requirements.

1.5 SUBMITTALS

A. Product Data: Submit dimensions, ratings, and performance data.

1.6 QUALIFICATIONS

A. Manufacturer: Company specializing in manufacturing products specified in this section with minimum three years experience.

PART 2 - PRODUCTS

2.1 EMERGENCY LIGHTING UNITS

A. Product Description: Self-contained emergency lighting unit as scheduled on the drawings.

2.2 EXIT SIGNS

A. Product Description: Exit sign fixture as scheduled on the drawings.

2.3 FLUORESCENT LAMP EMERGENCY POWER SUPPLY

A. Product Description: Emergency battery power supply suitable for installation in ballast compartment of fluorescent luminaire.

B. Lamp Ratings: One F32W lamp providing 1100 lumens, minimum.

C. Include TEST switch and AC ON indicator light, installed to be operable and visible from outside of assembled luminaire.

PART 3 - EXECUTION

3.1 INSTALLATION

A. Install suspended exit signs using pendants supported from swivel hangers. Install pendant length required to suspend sign at indicated height.

B. Install surface-mounted emergency lighting units and exit signs plumb and adjust to align with building lines and with each other. Secure to prevent movement.

C. Install wall-mounted emergency lighting units and exit signs at height as indicated on Drawings.

D. Install accessories furnished with each emergency lighting unit and exit sign.

E. Connect emergency lighting units and exit as indicated on Drawings.

F. Make wiring connections to branch circuit using building wire with insulation suitable for temperature conditions within unit.

G. Install specified lamps in each emergency lighting unit and exit sign.

H. Ground and bond emergency lighting units and exit signs in accordance with Section 16060.

3.2 FIELD QUALITY CONTROL

A. Operate each unit after installation and connection. Inspect for proper connection and operation.

3.3 ADJUSTING

A. Aim and adjust lamp fixtures.

B. Position exit sign directional arrows as indicated on Drawings.

3.4 PROTECTION OF FINISHED WORK

A. Re-lamp emergency lighting units and exit signs having failed lamps at Substantial Completion.

END OF SECTION

SECTION 16710

TELECOMMUNICATIONS EQUIPMENT AND CABLING

PART 1 - GENERAL

1.1 SCOPE OF WORK INCLUDES

A. Telecommunications Contractor (hereafter referred to as Contractor) shall, for a fixed fee, procure and install of all required materials to provide complete and functional telecommunications equipment and cabling system as defined in the accompanying project drawings, notes, and specifications. Contractor shall provide a complete, functional system including all necessary components, whether identified in this Section or not.

B. The work performed under this Section shall be of high quality and performed in a professional manner. The Texas Department of Transportation (Owner) reserves the right to reject all or a portion of the work performed, either on technical or aesthetic grounds.

C. Contractor shall, through coordination with the Owner or the Owner's Representative, provide materials and labor to result in an installed and tested, complete and working telecommunication cabling system as depicted within the project drawings/notes, and as described herein.

D. This Section of the Project documentation identifies the components, Manufacturers, and the acceptable installation standards for such components. Component identifications are included within this Section whether they are included in this project or not. Using the project drawings/notes, the Contractor shall determine which components do not need to be included and installed. Before beginning any work on the project, the Contractor shall provide a list of excluded components to the Owner or the Owner's Representative.

E. The Contractor shall initiate contact with and coordinate with the local telephone company to ensure that a standard Regulated Service Entrance or acceptable substitute is available and adequate to support the number of devices called for in the drawings. The Regulated Service Entrance includes the termination, lightning protection, and Telephone Company demarcation equipment and must be installed in compliance with all applicable codes and standards. Contractor shall provide and install punch blocks, back boards, multi-pair distribution cable, Cat-3 or Cat-5 compliant station wiring, ladder rack and/or J-hook assemblies, termination devices, and whatever else is needed to provide voice services at locations as depicted within the project drawings and notes. The drawings and notes depict routing, termination points, and other pertinent information.

F. Contractor shall provide and install device mounting racks, Cat-5 compliant station wiring, ladder rack and/or J-hook assemblies, patch panels, station outlet boxes, termination devices, and whatever else is needed to provide high speed data services at locations as depicted within the project drawings and notes. The drawings and notes depict routing, termination points, and other pertinent information.

G. Horizontal Cat-5 UTP 4-pair blue-jacketed station cable shall be provided and installed as depicted on the drawings (denoted as "data"). Installed data station cables shall be placed within conduit, Cat-5 compliant cable clips, cable raceway, and/or cable ladder rack. Data station cables shall be routed from each outlet as shown on the drawings to the hub room as shown on the drawings. Data station cables shall be homerun from point to point with no splices. Data station cables shall be terminated on EIA/TIA-568-A Cat-5 compliant 8-position/8-conductor (8P8C) modular jacks utilizing T568B wiring pin-outs at the user end, and on EIA/TIA-568-A Cat-5 compliant 8P8C 24-port patch panels utilizing T568B wiring pin-outs within the hub room rack mounted patch panels.

H. Horizontal Cat-3 UTP 4-pair white-jacketed station cable shall be provided and installed as depicted on the drawings (denoted as "voice"). Installed voice station cables shall be placed within conduit, Cat-3/5 compliant cable clips, cable raceway, and/or cable ladder rack. Voice station cables shall be routed from each outlet as shown on the drawings to the punch blocks located within the hub room as shown on the drawings. Voice station cables shall be homerun from point to point with no splices. Each voice station cable shall be terminated on two (2) 6-position/6-conductor (6P6C) modular jacks at each outlet as indicated on the drawing details at the user end, and on 66M150 termination blocks within the hub room.

I. Exact layouts of fixed wall offices, conference rooms, and modular furniture outlet placements shall be as provided by the Owner. In base bid, Contractor shall provide pricing based on the number of new outlets and reinstalled outlets shown on the drawings. Contractor shall provide unit pricing per each type of outlet that may be added by the Owner or the Owner’s Representative at any time prior to completion of Project. Contractor shall provide unit pricing for up to twenty (20) Cat-3 and/or Cat-5 (in any combination) point to point cable runs that may be added by the Owner or the Owner's Representative for miscellaneous use which may include, but is not limited to, elevator telephones, fire alarms, and card entry devices.

J. Except as otherwise shown on the drawings, each fixed wall outlet shall include two (2) 4-pair Cat-5 cables for data applications, terminated on Cat-5 compliant jacks, and one (1) 4-pair Cat-3 cable for voice applications, terminated on two (2) voice grade jacks per the drawing details. Other outlets shall be configured as shown on the drawing details.

K. Voice cable backboards shall be color-coded strictly per this Specification. Horizontal station cable backboards shall be blue; Riser backboards shall be green; Cross-connect backboards shall be white and include wire spool type cable management for cross connect routing as shown on the drawing details. If all of the voice cabling is installed on one backboard, the backboard shall be painted white and the wire spools and punch-down blocks shall be colored coded to identify use.

L. Telecommunications cabling system ground shall be single point, terminating at the Building Electrical Service Entrance Ground per the National Electrical Code. Grounding connectivity shall be in accordance with TIA/EIA TSB 67 and the National Electrical Code. Grounding for all voice riser cables, equipment racks, termination hardware, and related equipment shall be provided and placed by the Contractor.

M. Equipment racks, backboards, termination hardware, cable and wire management hardware, cable labeling, grounding conductors and termination, and all other ancillary equipment required to provide a complete and working telecommunication system shall be provided and installed.

N. Upon completion of installation of conduit, cable, and other components, Contractor shall firestop all penetrations through fire-rated barriers, panels, walls, floors, ceilings, and other partitions. Firestopping used must conform to an approved UL-listed firestopping system, and specific application of system components as set forth in an approved installation diagram. All system components, as well as specific UL-approved installation configuration diagram must be submitted prior to Contractor beginning any installation of cable, conduit, or other material. Any system submitted for installation must meet the codes and standards set forth below as a minimum. Contractor may exceed requirements if, in Contractor's judgment and with the Owner or the Owner's Representative acceptance, superior or more economical designs or materials are available for successful and continuous operation of the equipment as required by this Specification. Installed firestopping must meet requirements of applicable governing regulatory bodies and codes and must pass inspection by local authorities.

O. The entire cabling system shall be machine labeled with all cables numbered and terminated sequentially. The entire cabling system shall be tested and documented as specified herein and warranted to be free from defects in materials and workmanship and capable of transmitting standards based network applications regardless of protocol or network equipment Manufacturer for a period of 10 years. Warranty period commences upon Owner's first use of complete installed system or upon Owner's written acceptance of completed installation, whichever occurs first.

P. Contractor shall prepare and submit record documentation and final As-Built drawings in both hard copy and electronic form as prescribed within the project specifications.

1.2 REFERENCE STANDARDS: The following codes and standards set forth the minimum requirements which may be exceeded by the Contractor if, in the Contractor's judgment and with Owner's acceptance, superior or more economical designs or materials are available for successful and continuous operation of the equipment as required by this Specification:

A. The cable system shall meet the standards set forth in the American National Standards Institute / Electronic Industries Association / Telecommunications Industry Association recommended standards EIA/TIA-568-A, -569, -570, -606, -607, and EIA/TIA-TSB 67, 72.

B. All cables installed under this Specification shall be Underwriters' Laboratories (UL) listed and certified to pass the appropriate UL test for cable designated for installation in plenum and riser spaces per application.

C. The telecommunication cable system shall conform to all local codes and ordinances set forth by local jurisdictions as well as applicable sections of the National Electrical Code, NFPA-70-1996.

D. Firestopping shall be in accordance with ASTM E 814, ASTM E 136, and UL 1479 as well as Section 300-21 of the National Electrical Code.

E. Other applicable standards:
1. ANSI C2-1996 National Electrical Safety Code
2. UL 497 Electrical Grounding and Bonding Equipment
3. FCC Rules and Regulations, Part 68
4. All local codes as adopted by local governmental bodies and the State of Texas
5. Basic, Uniform, and Standard Building Codes (BOCA, ICBO, SSBC)
6. REA Cable Designations - PE Series Specifications
7. NFPA 101 - Life Safety Code

1.3 CONTRACT DRAWINGS AND SPECIFICATIONS

A. The intent of the drawings and specifications is to establish the type of system and functions, but not to set forth each specific item essential to the functioning of the system. The drawings are generally diagrammatic and show approximate location and extent of work. In case of doubt of work intended, it is the responsibility of the Contractor to request instructions from the Owner or the Owner's Representative. The Contractor shall be responsible for installing a complete functioning system.

B. Contractor shall review all drawings and specifications before commencing work. Where discrepancies occur, Contractor shall immediately notify the Owner or the Owner's Representative for clarification.

1.4 SUBMITTALS

A. Prior to ordering any material, provide four (4) copies of complete brochure information on all products for installation on this project. All brochures and specification sheets shall be bound within a three-ring loose leaf binder and organized in the same manner as the Products portion of the Specifications. If more than one product is listed on the same page of the brochure or specification sheet submitted, the intended product or part number shall be clearly indicated or highlighted by the Contractor.

B. Contractor shall submit Proposed Test Procedures and a sample of the printout or test result form, as well as a list of all Test Equipment to be used for cable testing.

C. Contractor shall submit a Proposed Labeling and Cable Identification Scheme describing the outlet labeling, patch panel labeling, fiber patch panel labeling, voice termination labeling, and all cable end labeling procedures and samples.

D. If the Contractor routes telecommunications cables through fire rated walls or other fire rated elements, the Contractor shall submit a Proposed Firestopping System plan and method for approval prior to beginning the firestopping portion of the work.

1.5 RECORD DRAWINGS: Contractor shall maintain one set of drawings on site to continually and accurately record the as-constructed work. The mark-up drawings shall accurately indicate locations of all equipment, pull-boxes, conduits, cable types, cable routing, cable labeling, outlet

locations, and outlet labeling. All record drawings shall be maintained and updated daily and made available for inspection at any time during the course of the work by the Owner or the Owner's Representative. At project completion Contractor shall deliver drawings and documentation of the project, in both hard copy and in AutoCAD V12 or later format, to minimally include:

A. As-built telecommunications floor plans of the facility with entire contracted cable and outlet placement along with the outlet labeling scheme clearly depicted.

B. As-built logical riser diagram describing connectivity and cable sizes for both telecommunications and grounding cabling systems.

C. Cable test results submitted in both hard copy and magnetic format along with viewing software from the tester Manufacturer. Hard copy to be bound within loose-leaf binder neatly organized according to the test type and medium as identified in the Testing portion of this Specification.

PART 2 - PRODUCTS

2.1 GENERAL

A. Materials and equipment provided must be new products of Manufacturers regularly engaged in the production of such products.

B. Products must be UL listed where a UL test procedure is applicable.

C. Substitutions of any equipment from the Approved Manufacturers listing of each product must be approved by the TxDOT Information Systems Division person assigned to this Project. Requests for substitutions must be submitted in writing and state which component is being requested for substitution, and include supporting documentation proving equivalency to all parameters of listed components.

2.2 TELECOMMUNICATIONS CABLES

A. Multi-pair Copper Distribution Cable
   1. Multi-pair Copper Voice Distribution Cable shall be used to provide connectivity between the new network interface device in the telecommunications room of the office building to existing telecommunications backboard in the electric room in the existing shop building. Suitable cable support apparatus shall be provided where a part of cable run is not placed in conduit.
   2. Telephone Distribution Cable, 25 pair, 22 AWG, with PVC jacket for conduit placement.
   3. Cable shall be constructed of 22 AWG solid annealed and individually insulated copper conductors with a PVC outer jacket. The insulated conductors shall be twisted into pairs of varying lengths to minimize crosstalk. The twisted pairs shall be coded using industry standard colors and bound into the drawing specified number of pair groups as per ANSI/ICEA S-80-576.

4. Cable shall be UL listed Type CMG or CM as required per the installation environment for which it is placed and as outlined in the NEC Sections 800-51(a) and (b) respectively.
5. Approved Manufacturers:
   a. Lucent
   b. General Cable
   c. Essex Cable
   d. Approved Equivalent

B. Cat-5 Data Station Cables.
1. Cat-5 rated 4-pair UTP Horizontal/Station cables shall provide connectivity from the data patch panel in the telecommunications room to each fixed wall and workstation outlet location as indicated on the project drawings. Each outlet shall be served with the quantity of Cat-5 cables listed per the outlet legend described in the project drawings.
2. Cables shall be constructed of 24 AWG solid annealed and individually insulated copper conductors. The insulated conductors shall be twisted to form non-shielded pairs using standard telephone industry color codes. The outer cable sheath of all data station cables shall be blue.
3. Cables shall be type CMP rated as outlined in the NEC Sections 800-51(a). For plenum rated cables, the conductor insulation of all pairs shall be FEP or Teflon material.
4. Cables shall meet or exceed the minimum structural and electrical characteristics defined within ANSI/TIA/EIA-568-A for Cat-5 cables and shall be acceptable for IEEE 802.3 applications
5. Approved Manufacturers:
   a. Lucent
   b. Berk-Tek
   c. CommScope
   d. Approved Equivalent

C. Cat-3 Voice Station Cables
1. Cat-3 rated 4-pair UTP Horizontal/Station cables shall provide connectivity from the telecommunications room to each auxiliary wire closet and fixed wall and workstation outlet location as indicated on the project drawings. Each outlet shall be served with the quantity of Cat-3 cables listed per the outlet legend described in the project drawings.
2. Cables shall be constructed of 24 AWG solid annealed and individually insulated copper conductors. The insulated conductors shall be twisted to form non-shielded pairs using standard telephone industry color codes. The outer cable sheath of all voice station cables shall be white.
3. Cables shall be type CMP rated as outlined in the NEC Sections 800-51(a).
4. Cables shall meet or exceed the minimum structural and electrical characteristics defined within ANSI/TIA/EIA-568-A for Cat-3 cables and shall be acceptable for IEEE 802.3 applications.
5. Approved Manufacturers:
   a. Lucent
   b. Berk-Tek
   c. CommScope

d. Approved Equivalent

D. Cross Connect Wire.
1. Contractor shall provide one Reel/Box (1000 ft) of telephone cross-connect wire for installation of cross-connections by the Owner.
2. Wire shall be solid, 24 AWG, two-pair, copper conductors insulated with industry standard color-coded PVC. Provide cross connect wire in reel containing one thousand feet (1000') of wire.
3. Cross Connect Wire shall be of the same Manufacturer as Multi-pair Copper Voice Riser Cable Manufacturer.

E. Grounding Conductor.
1. Bare stranded copper ground conductors shall be provided and installed by the Contractor as shown on the project drawings to provide a grounding system consistent with the 1996 National Electrical Code as well as EIA/TIA 607.
2. Ground conductors shall be minimum 6 AWG between the Building Service Ground point and the hardware components located within the Laboratory hub room.

2.3 TERMINATION EQUIPMENT: Termination equipment shall be provided and installed by the Contractor. Mounting hardware and accessories typically required to provide a complete and working installation shall be provided and installed by the Contractor whether listed herein or not.

A. Cat-5 Patch Panels
1. 19" equipment rack-mounted 24-port modular patch panels shall be provided and installed in the telecommunications room and in any auxiliary wire closets as indicated on the project drawings. Patch panel shall be rated Cat-5 compliant (per ANSI/EIA/TIA-568-A) and shall utilize 8P/8C style non-keyed jacks with T568B pin-out assignments and 110-type termination.
2. Approved Manufacturers:
   a. Panduit
   b. Approved Equivalent

B. Voice Punch Down Termination and Connecting Blocks
1. Type 66M150 termination/wiring blocks for cross connecting between voice station and Riser cables shall be provided and installed in the telecommunications room and any auxiliary wire closets as shown on the project drawings. 66M150 Style blocks shall be wall mountable and manufactured with standoff legs to allow cables to pass behind. All required connecting blocks (4-pair and 5-pair), and labeling strips shall be included.
2. Approved Manufacturers:
   a. Lucent
   b. Siemon
   c. Approved Equivalent

2.4 TELECOMMUNICATIONS WORKSTATION OUTLETS

A. Telecommunications Workstation Outlets shall be provided at the locations shown on the project drawings. Cabling of all telecommunications outlets is the responsibility of the Contractor. Outlets shall be configured, and labeled as depicted in the project drawings. One Manufacturer shall supply all components for all outlet assemblies.

B. Voice/Data outlets will be of modular design. Faceplates and jack inserts shall be color coordinated per Owner's direction. Each outlet shall be configured with modular Cat-5 compliant 8P/8C jacks wired to the T568B pin assignment sequence and/or modular voice grade 6P/6C jacks wired to a "split-pair" USOC pin assignment per the project details.

C. Any unused faceplate ports shall have blank covers installed.

D. Approved Manufacturers:
   1. Panduit
   2. Approved Equivalent

2.5 CABLE SUPPORT HARDWARE AND MOUNTING EQUIPMENT: Miscellaneous Equipment shall be provided and installed by the Contractor as described below and on the drawings. Mounting hardware and accessories typically required to provide a complete and working installation shall be provided and installed by the Contractor whether listed herein or not.

A. Plywood Backboards: Plywood backboards shall be 4' x 8' x ¾" grade CDX plywood mounted with the 8' length placed in the vertical position and securely anchored to wall with fasteners appropriate for the wall construction. Backboards shall be painted white with fire retardant paint as per local code requirements.

B. Termination Backboards: Voice components shall be mounted on Terminal Backboards per the project drawings. Contractor shall utilize Blue (183B1) backboards for station cable termination, Green (183B2) backboards for Riser cable termination, and White (187B1) backboards for all cross connections.

C. Plywood and Termination Backboard Cable Management shall be provided and placed by Contractor on all telecommunications backboards to provide effective routing of all telecommunications cabling. Contractor shall utilize D-rings, Wire Distribution Spools, and Cable Clamps as depicted on the accompanying project drawings.

D. Equipment Rack shall be provided and placed by Contractor as shown on the project drawings. Unit shall be wall mounted and shall be manufactured of aluminum. Nominal equipment rack width shall be 19". Equipment rack shall conform to EIA Standard RS-310-C.
   1. Approved Manufacturers:
      a. Chatsworth Products
      b. Homaco
      c. Harris
      d. Approved Equivalent

E. Equipment Rack Cable Management: Contractor shall provide and install double-sided vertical and horizontal Cable Management sections to effectively organize, strain relieve, and manage the number of data, station, and patch cables as detailed in the project drawings.
   1. Approved Manufacturers:
      a. Chatsworth Products
      b. Homaco
      c. Ortronics
      d. Approved Equivalent

F. Ground Bars, Lugs, and Clamps: Where applicable, ¼" x 12" x 1" copper ground bars shall be installed on the telecommunications Backboard as shown on the drawings. Ground bars shall be mounted utilizing insulated standoffs. Copper grounding conductors shall be placed per the accompanying drawings to effectively bond each ground bar to the Building Electrical Service Entrance Ground. Equipment racks and any other telecommunications equipment requiring grounding shall be bonded to the nearest ground bar using industry standard grounding connectors or lugs as recommended by the respective equipment Manufacturer.
   1. Approved Manufacturers:
      a. Ground Bar - Newton Instruments Fig. 3059
      b. Approved Equivalent

G. Surface Mounted Raceway.
   1. The raceway and all of its fittings and system components shall be nonmetallic, UL-listed with nonflammable self-extinguishing characteristics tested to comparable specifications of UL94V-0.
   2. The raceway shall be a two-piece design with a base and a snap-on cover, or one-piece with a plastic hinged cover section. Total width shall be a minimum of 1.5" by 0.75" deep with an approximate thickness of 0.10". Each channel shall be of sufficient size as to adequately support the number of telecommunications cables required per the outlet configuration(s).
   3. Transition fittings shall consist of tees, elbows, cover clips, end fittings, and drop ceiling connectors. Transition fittings shall be of the same Manufacture as the raceway, shall be placed per Manufacturer's recommendations and installation requirements, and shall be designed for the specific installation application where installed.
   4. Approved Manufacturers:
      a. Wiremold
      b. Panduit
      c. Approved Equivalent

H. J-hook Assemblies: Contractor shall comply with the maximum fill and spacing requirements as specified herein and/or shown on the project drawings/notes. Contractor shall provide and install J-hook assemblies as required to meet spacing and fill requirements.
   1. J-hook horizontal cable supporting hardware shall be UL listed. The J-hook shall provide a broad flat base for proper cable support, thereby reducing stress and bending of cabling.

2. Contractor shall attach appropriate J-hook fasteners for wall, stud, beam, or flange mounting to the supporting structure. Space fasteners to fall a maximum of 5’ apart and no more than 4’ from the final outlet destination turn point as shown on the project drawings.
3. Approved Product:
   a. Caddy CableCat Clips and Caddy supporting hardware
   b. Approved Equivalent

PART 3 - EXECUTION

3.1 INSTALLATION REQUIREMENTS

A. Contractor shall give notice to all entities requiring advance notification and comply with all regulations specified by all governing agencies having jurisdiction over the performance of the work.

B. Contractor shall coordinate with and abide by the construction schedule and sequencing as dictated by the Owner or the Owner’s Representative. Storage and staging areas within the job site shall be as dictated by the Owner or the Owner’s Representative.

C. Contractor shall provide and pay for all permits, labor, materials, equipment, tools, utilities, and services necessary for the proper execution and completion of the Telecommunications Cabling System.

D. Contractor shall maintain during construction and submit accurate record construction drawings as described in Section 1.5 Record Drawings within two (2) workdays after completion of construction.

3.2 INSTALLATION METHODS

A. Contractor shall provide and install telecommunications cabling system as detailed by the project drawings, notes, details, specifications, and addenda if so issued. Where specific equipment and cable layouts are provided, it is the Contractors responsibility to install as specified or to provide complete information justifying alternatives prior to beginning work on affected portions of the project.

B. The following prescribes methods, which shall define a minimum level of quality to be maintained throughout the project. By prior written agreement with the Owner, the Contractor may exceed this level of quality; however, the project schedule, budget, and function of the delivered system must be maintained while doing so.
   1. Use the maximum possible bending radius on all cables during installation. A radius of curvature greater than the minimum bending radius of the cable per the Manufacturer's specifications shall be maintained at all times.
   2. Where placed within conduit, all cables shall be continuously lubricated during the pulling-in process. The maximum pulling tensions specified by the cable Manufacturers shall not be exceeded. Monitor cable-pulling tension with a mechanical tension-meter.

3. Contractor shall use tools and equipment specifically designed for each installation task. The Contractor shall utilize installation practices, which ensure the highest quality installation. Contractor shall perform all cutting, splicing, pulling and termination of cables using equipment specifically designed for that purpose.
4. Contractor shall install tie wraps using a tension-controlling cutting device. Tension shall not exceed that which is specified by the Manufacturer of the cable as being deleterious to the specified performance of the cable. Tie wraps and other securing hardware shall be rated as required for the installation environment.
5. Contractor shall fill conduit with cables with the following guidelines:
    a. Where conduits are stacked, the cabling system Contractor shall fill the bottom raceway to its maximum fill ratio first and then move to the next raceway above it and so on.
    b. Where multiple conduits are being used, the Contractor shall fill one conduit to its maximum fill ratio before going on to the next conduit. The cabling system Contractor shall leave as many spare conduits available as possible and under no circumstance shall the Contractor leave less than one spare conduit available.
    c. The maximum fill ratio for all conduits shall be 40%.
    d. The Contractor shall not exceed the maximum fill ratio, per the NEC, for any reason.
    e. All spare conduits shall have two (2) pull strings installed and left for future pulling in of cable. The pull strings shall be clearly labeled on each end as "Pulling Line Number 1 and Pulling Line Number 2," and each end shall be clearly labeled to indicate the location of its corresponding opposite end.
6. Contractor shall support cables running overhead that are not installed in raceway or conduit by approved load dispersing “J” hook assemblies, spaced a maximum of 5 feet from each other.
7. Install raceways or conduit system completely before pulling-in cables. Clean interior of each run of conduit before pulling-in cable.
8. Penetrations through walls and floors shall maintain fire resistance rating, per NEC 300-21.
9. Install connectors in conformance with Manufacturer recommended stripping and crimping procedures. Use special tools designed for this purpose.
10. Termination onto patch panels and punch-down onto termination blocks of all station cables shall be in consecutive, as-built, numerical sequence from top to bottom and left to right without skipping any ports or positions. Where applicable, floor number will comprise the high order number of the sequence.
11. Cat-5 installation shall conform strictly to EIA/TIA-568-A and TSB-40B to insure a quality system that meets the transmission rate criteria.
12. Labeling of all telecommunications components shall be as described within the accompanying project drawings and Section 3.4 “Labeling Methods” of this Specification Document. Labeling shall be mechanically produced not handwritten.

3.3 FIRESTOPPING

A. For the purposes of this section the following definitions shall apply:

1. Firestop System means a specific construction consisting of any device intended to close off an opening or penetration during a fire and/or materials that fill an opening in a wall or floor assembly where penetration is by cables, cable trays, conduits, ducts, pipes and any poke through termination device, such as electrical outlet boxes along with their means of support through the wall or the floor opening. (Ref: ASTM E-814)
2. Listed System Design means an informational listing by an Accredited Testing Agency developed from Firestop Systems Reports depicting the correct use and installation of firestop materials. These published listings contain drawings depicting geometry, minimum/maximum dimensions for all the individual components tested including penetration item type and size, annular space, insulating materials used, substrate types and thickness, sealant types and thickness, etc.
3. Fire Resistance Rating means the time in hours or fraction thereof that a material or assembly of materials will withstand the passage of flame and the transmission of heat when exposed to fire under specified conditions of test and performance criteria, or as determined by extension of interpretation derived therefrom as prescribed in the National Building Code.
4. Service Penetration means any hole or void created in the faces or edges of Fire Separations or Firewalls for Mechanical and Electrical through penetrations or poke through termination devices and/or other building services.
5. Firestop Material means any material used individually or as a component to create an ASTM E-814 Firestop System.

B. Work Included in Firestopping.

1. Work of this section comprises firestop materials and listed systems designs intended to act as firestop systems and smoke seals at openings around penetrations, at unpenetrated openings, at projecting or recessed items, and at openings and joints within and around fire separations and firewalls.
2. All plans involving the installation of the various firestopping systems must be submitted to and approved by the Owner or the Owner’s Representative prior to beginning the firestop systems portion of the work.
3. Cable shall at no point pass through an unsealed penetration through a fire-rated barrier.
4. Contractor shall provide seals approved by the UL in all fire rated separations and firewalls to form tight barriers to retard the passage of flame and smoke.
5. The installed seals shall provide and maintain the fire resistance rating of the adjacent floor, wall or other fire separation assembly to the requirements of ASTM E-814 and acceptable to authorities having jurisdiction and the Engineer.
6. Provide the work using competent Installers, experienced in the application of the materials and systems being used, approved and trained by the material or system Manufacturer.
7. Firestop systems shall conform to the (F) and (T) ratings of ASTM E-814 and other local requirements of authorities having jurisdiction.

3.4 LABELING METHODS

A. General: Labeling shall be machine produced or typewritten, self laminating, indelible, and shall be permanently affixed to patch panel ports, termination blocks, and outlet locations, as well as all station and data riser cable ends. Handwritten labels will not be accepted. Contractor shall confirm final, as-built numbers with the Owner or the Owner's Representative prior to labeling. Proposed labeling scheme shall at a minimum meet the following criteria.

B. Labeling of all components within the hub rooms shall be in sequential order.

C. Outlet labels shall provide reference to the final, as-built outlet location and station position. Contractor shall clean outlet faceplates of all dirt and dust prior to applying labels. Provide “Voice” and “Data” descriptors or icons on the proper jacks.

D. Station Cable Labeling: Each station cable label shall possess characters describing the serving patch panel and port position, or serving termination block and position, and the destination room number and station identifier.

E. Voice Distribution Cable Labeling: Each voice distribution cable shall possess characters describing both the serving termination block and position, and destination termination block, and position.

F. Patch Panel Labeling: Each station patch panel port label shall possess characters describing the final, as built room number within which the outlet is located as well as the specific station identifier. Patch panels shall be numbered consecutively from top patch panel in rack to bottom patch panel in rack.

G. Termination Block Labeling: Each station termination block label shall possess characters describing the final, as built, room number within which the outlet is located as well as the specific station identifier. The positions shall be labeled in consecutive sequence from as-built, final room and station order.

PART 4 - TESTING AND QUALITY ASSURANCE

4.1 GENERAL

A. Contractor shall have installed similar systems in at least ten (10) other projects within the last five (5) years. Contractor shall submit evidence of compliance with this requirement prior to beginning work on the project.

4.2 TESTING

A. Individual Installers of cabling, components, and devices shall be certified through the Panduit Installer Certification Program. Contractor shall submit evidence of compliance with this requirement prior to any individual beginning work on the project.
   1. The Contractor shall separately test and document the cables and terminations throughout the entire cabling system. The Contractor shall ensure that the

installed cable and equipment is without flaw and that no damaged cable or equipment has been included in the installation. The Owner's Representatives shall be allowed to observe the testing of the installed cabling and terminations at any time during the testing process.

2. Acceptance of the installed Telecommunications Cabling System shall be based on the quality of Contractor performance by analysis/inspection of the testing program documentation and the conformance of the system operation with the criteria described herein. Contractor shall make available all drawings and documentation prior to acceptance testing.
3. Contractor shall provide all necessary testing equipment for performing the required acceptance test. Contractor shall verify the authenticity and display appropriate calibration data to include the expiration date of the correct calibration.
4. Contractor shall perform inspection of all products before installation and shall perform other inspections as necessary to assure that quality of performance conforms to specified requirements. Contractor shall perform timely quality assurance inspections throughout the duration of the project, including a pre-installation inspection and a final inspection. The pre-installation inspection shall be performed jointly by the Contractor and the Owner or the Owner's Representative a minimum of five (5) work days prior to beginning any work. The pre-installation inspection will, at a minimum, verify the conformance of all equipment to the requirements set forth by the drawings and Specifications and industry standards, site readiness, availability of Bill of Materials (BOM), and adequacy of equipment furnished by the Contractor.
5. The Contractor shall perform in-progress inspections regularly to verify conformance of the installation methods to the Scope of Work (SOW) and industry standards. The Contractor shall prepare an inspection checklist to facilitate an orderly inspection process and to insure that all installed components of the cabling infrastructure are examined before, during and after installation. Contractor shall provide one copy of each completed inspection checklist within one (1) workday after each inspection. Inspections during installation as well as a final inspection encompassing the entire installed system shall be performed prior to system acceptance by the Owner or the Owner's Representative.
6. The Contractor shall correct, in a timely manner, any installation deficiencies or unacceptable equipment, based on a Contractor, the Owner or the Owner's Representative quality assurance (QA) inspection. Contractor shall then perform re-certification of any affected portion of the installation. All quality assurance inspections are subject to verification by the Owner or the Owner's Representative.
7. The Contractor shall perform inspection of the project as a whole, assuring himself that the work on the project is ready for final acceptance, before calling upon the Owner or the Owner's Representative to make a final inspection. Evidence during acceptance testing that such overall inspection has not been performed shall be grounds for rejection of installation and rescheduling of testing.
8. Testing of all installed telecommunications cabling systems shall be performed by the Contractor. Interim testing of the cabling systems during and after installation is encouraged to ensure that the following testing and acceptance criteria are met.

4.3 UTP COPPER CABLE SYSTEMS

A. All twisted pair cable shall be tested for continuity, crosses or grounds, and to ensure that pin-outs are in accordance with the drawings and these Specifications. Test results shall document each installed cable pair for pass/fail, problems encountered in the case of a failure, and the procedure required to result in a cleared pair. The results of the testing shall be furnished in printed format. All test documents shall be dated and signed by the personnel performing the testing. Hand-written test results are not acceptable.

B. Contractor shall perform final testing on the entire UTP voice copper cable system to demonstrate the acceptability of the project as installed. As a minimum, the Contractor shall perform and furnish documentation of the following tests:
1. Continuity
2. Shorts/Crosses
3. Grounds
4. Opens
5. Reversed Pairs
6. Split Pairs
7. NEXT Performance
8. Length
9. Attenuation Performance

C. Cat-5 End to End Link Performance shall be in accordance with the specification set forth in ANSI/TIA/EIA-568-A as well as meeting the documents' requirements for:
1. Cabling length and topology
2. Component, performance and reliability
3. Installation practices

D. All Cat-5 wiring shall be tested to indicate a minimum of 100 Mbps transmission capability. Test results shall document each installed cable pair for measured attenuation and Near End Cross Talk (NEXT), problems encountered in the case of a value being unacceptable, and the procedure required to result in a compliant link. Cat-5 testing shall use an approved Cat-5 testing device for validation of performance. Each cable pair tested shall meet the following link performance requirements from the Hub Room termination to the outlet port as set forth in the ANSI/TIA/EIA-568B:

CATEGORY FIVE END TO END LINK PERFORMANCE		
Frequency (MHz)	Maximum Attenuation (dB)	Maximum NEXT (dB)
1	2.2	-54.5
4	4.7	-59.5
10	7.0	-44
16	8.76	-40.5
20	10.0	-38.5
100	23.5	-27

4.4 TESTING DELIVERABLES

A. Within ten (10) days of completion of testing all cabling systems, Contractor shall submit two (2) copies of the fiber, general copper, and Cat-5 test results as described in the Testing portion of the Specifications in both hard copy and electronic format. The hard copies shall be submitted in an orderly and typewritten format, bound, and separated by test type using dividers.

4.5 WARRANTY

A. In addition to guarantee of equipment by Manufacturer(s), the Contractor shall also guarantee equipment. Such guarantee shall include tests, adjustments and/or replacements of defective equipment, materials, and workmanship for a period of ten (10) years from the date of acceptance of the project as complete by the Owner or the Owner's Representative.

END OF SECTION

SECTION 16722

GAS MONITORING SYSTEM

PART 1 - GENERAL

1.1 GENERAL OPERATION

A. The Gas Monitoring System (GMS) shall operate as stand alone system(s). The monitors shall be engineered to continuously monitor for the presence of propane gas. When gas concentration surpasses the preset limit in any sensor module in a zone, audible alarm indication and relays shall be activated for that particular zone. Sensor reaction shall be instantaneous; however alarms shall be capable of being delayed dependent on user preference, and dedicated flashing warning lights for visual indication and low mounted side wall exhaust fans for propane gas evacuation shall be immediately activated.

B. The preset limit for activation shall be 20% LEL (lower explosive limit) for propane gas.

1.2 SCOPE: Install the following in accordance with the engineering drawings:

A. Gas detection monitor panels (with built-in audible alarm), sensors, flashing warning lights and dedicated exhaust fans.

B. All associated electrical equipment and materials – conduit, wiring, switches, relays, etc.

1.3 RELATED SECTIONS

A. Section 16123 – Building Wire and Cable

B. Section 16130 – Raceways and Boxes

C. Section 16010 – Basic Electrical Requirements

1.4 REFERENCES

A. NFPA 70 – National Electrical Code

B. NFPA 58 – Liquefied Petroleum Gas Code

C. NFPA 72 – National Fire Alarm Code

1.5 SUBMITTALS

A. Product Data: Provide Manufacturers data on all equipment and components described herein.

B. Submittal shall include Manufacturer's Installation Instructions and complete system wiring and central control station schematics.

1.6 OPERATION AND MAINTENANCE DATA

A. Calibrate monitoring system per Manufacturer's recommendations.
   1. The Manufacturer's authorized technical representative shall be present during all tests and inspections. The Manufacturer's authorized representative shall provide supervision of final connections to the system panel, perform a complete functional test of the system and submit a written report to the contractor attesting to the proper operation of the completed system. This report shall be a part of the final documents submitted to the owner.

B. The Manufacturer's authorized representative shall perform an eight (8) hour training session where the representative shall instruct and train a minimum of six (6) TxDOT personnel and, if applicable, local Fire Department personnel in the operation of the system. At the training session, the Manufacturer's authorized representative shall provide a complete written operating and maintenance manual that clearly describes the system, its operation, and any maintenance requirements. It shall also have a clearly understandable maintenance schedule and a complete parts list for all components of the system(s).

1.7 DELIVERY, STORAGE, AND HANDLING

A. Deliver, store, protect and handle products to site under provisions of the Uniform General Conditions and Special Conditions.

1.8 EXTRA MATERIALS

A. Monitoring system Calibration Kit.

B. Furnish under provisions of the Uniform General Conditions and Special Conditions.

PART 2 - PRODUCTS

2.1 MANUFACTURERS

A. Gas Monitoring Equipment:
   1. Armstrong Monitoring Corporation
   2. BW Technologies
   3. Enmet Corporation
   4. Thermo Gas Tech
   5. Rel-Tek Corporation
   6. Approved equal

2.2 GAS MONITORING SYSTEM

A. Monitoring Panel:
   1. Shall be enclosed in a NEMA 12 cabinet.
   2. Dual DPDT 10 ampere relays for alarm actuation and control of ventilation equipment and/or auxiliary alarms.

3. LED's indicating power on, low and high alarms, fail, plus a user selectable audible indicator capable of being silenced for high alarm.
4. Test sequence activated by single push button.
5. Alarms shall be equipped with user selectable time delays whereby, when chosen, low and high alarm conditions must prevail for five and ten minutes respectively before activation occurs.
6. Alarms shall be equipped with dead bands which require gas levels to decline slightly below the original trip point before alarms will automatically reset.

B. Sensors:
1. Multi-drop propane gas sensor compatible with Monitor Panel.

C. Strobe (Warning) Light:
1. 120 VAC amber strobe light. See drawing schedule.

D. Alarm annunciator:
1. Annunciators in office areas shall be red in color, shall be clearly audible, well above a normal sound level, and shall be of such a size that it is inobtrusive in the environment.
2. Annunciators in exterior areas shall be red in color, and shall be clearly audible across the compound, well above a normal sound level.

PART 3 - EXECUTION

3.1 INSTALLATION

A. GMS shall be installed in accordance with Manufacturer's instructions, NFPA 58, local codes, the National Electric Code (NEC) and the engineering Drawing. See Drawing for locations.

B. Monitor – Bottom of monitor panel shall be mounted on wall 48" above floor.

C. Sensors – Shall be mounted on wall 18" above floor. All wiring shall be run in conduit with no exposed wiring.

D. Strobe Warning Light – Shall be mounted on wall 10 feet above floor. All wiring shall be run in conduit with no exposed wiring.

E. Alarm Annunciators – Shall be mounted on wall 10 feet above floor (or just below ceiling in office areas). All wiring shall be run in conduit with no exposed wiring.

F. Side wall exhaust fans shall be wired into the GMS and set to activate set upon detection of LP gas. See drawings for fan locations.

END OF SECTION