Texas Department of Transportation

July 26, 2006

TO WHOM IT MAY CONCERN:

The Texas Department of Transportation (TXDOT), an agency of the State of Texas, is pleased to present this **Request for Qualifications and Proposals (RFQ/RFP)** to any prospective qualified Design Build Firm (D-B) who can design, develop and construct a new Belton Area Engineer/Maintenance Facility ("PROJECT") for an exchange of TxDOT's existing sites, including land and improvements, located at 1502 Old Holland Road, Belton, 76513; 2102 Martin Luther King Blvd., Killeen, 76541; 3801 North 3rd, Temple, 76501, Bell County, Texas; (TXDOT PROPERTY). The D-B is invited to respond by submitting their qualifications and proposals described within this RFQ/RFP.

TXDOT will make the RFQ /RFP available to any party at the following address:

Texas Department of Transportation
Waco District Headquarters
100 S. Loop Dr., Waco, Texas 76704

It will also be published on the following website: http://www.dot.state.tx.us/MNT/contract/rfp.htm. Interested parties are responsible for monitoring the website for information concerning the RFQ/RFP and any amendments that may be issued.

TxDOT will not accept any submittal by facsimile, electronic transmission or any method other than stated in the RFQ /RFP.

TxDOT reserves the right not to qualify submitters and to cancel or modify this solicitation at any time if it deems, in its sole discretion, that such measures are in TxDOT's best interest.

TxDOT looks forward to receiving and reviewing your RFQ/RFP submittals, and to work with the selected Proposer for the successful development of the PROJECT.

Sincerely,

Richard J. Skopik, P.E.
District Engineer, Waco District

Texas Department of Transportation

REQUEST FOR QUALIFICATIONS
AND
PROPOSAL
CBC4704-00-668

FOR A

PROPERTY EXCHANGE:
THE EXISTING
BELTON AREA ENGINEER/MAINTENANCE FACILITY,
KILLEEN MAINTENANCE FACILITY, and
TEMPLE MAINTENANCE FACILITY
FOR A REPLACEMENT FACILITY

Prepared by:
Texas Department of Transportation
Maintenance Division, Facilities Management Section
150 East Riverside, 4th Floor, North Tower
Austin, Texas 78704
(512) 416-3048

July 26, 2006

TABLE OF CONTENTS

INTRODUCTION **1**

GENERAL DEFINITIONS **3**

DESCRIPTION OF PROJECT **7**

DESCRIPTION OF TXDOT PROPERTY **11**

DESCRIPTION OF TxDOT PROPERTY (NEW SITE) **14**

PROPOSAL REQUIREMENTS AND INSTRUCTIONS **16**

EVALUATION CRITERIA **23**

PRE-SUBMITTAL CONFERENCE **25**

POINTS OF CONTACT **26**

TXDOT RESERVATION OF RIGHTS **27**

LETTER OF INTEREST FORM **29**

EXHIBITS
A1- TxDOT PROPERTY DESCRIPTION (Existing Belton Site) **31**
A2- TxDOT PROPERTY DESCRIPTION (Existing Killeen Site)
A3- TxDOT PROPERTY DESCRIPTION (Existing Temple Site)
B - TxDOT PROPERTY (New Site – Vacant)

ATTACHMENTS: **39**
ATTACHMENT A1 – Appraisal Information – Existing Belton Site
ATTACHMENT A2 – Appraisal Information – Existing Killeen Site
ATTACHMENT A3 – Appraisal Information – Existing Temple Site
ATTACHMENT B1 – Survey – Existing Belton Site
ATTACHMENT B2 – Survey – Existing Killeen Site
ATTACHMENT B3 – Survey – Existing Temple Site
ATTACHMENT C1 – Phase I Environmental Assessment – Existing Belton Site
ATTACHMENT C2 – Phase I Environmental Assessment – Existing Killeen Site
ATTACHMENT C3 – Phase I Environmental Assessment – Existing Temple Site
ATTACHMENT D – Utility and Topographic Site Survey – New Site (Vacant)
ATTCHAMENT E – Geotechnical Report (Soils Analysis) – New Site (Vacant)
ATTACHMENT F – HUB Subcontracting Plan (HSP)
ATTACHMENT G – TxDOT Architectural Design and Production Guidelines
ATTACHMENT H – Child Support Statement
ATTACHMENT I – Preliminary Cost Estimate Form - Schedule of Values
ATTACHMENT J – Development and Exchange Agreement (DEA)
ATTACHMENT K – Uniform General Conditions/Supplemental General Conditions
ATTACHMENT L – Wage Rates (Building & Highway) Starr County
ATTACHMENT M – Project Specific Floor Plans, Elevations, Building sections and Site Plan
ATTACHMENT N – Prototypical Maintenance Facility Construction Documents (Standards)
Austin South Travis - Drawings and Specifications
Austin South Travis - Drawings and Specifications
ATTACHMENT O – ITEM 506 Temporary Erosion Control

INTRODUCTION

The Texas Department of Transportation (**TxDOT**), an agency of the State of Texas, is issuing this **REQUEST FOR QUALIFICATIONS AND PROPOSALS (RFQ/RFP)** to select from prospective qualified Design-Build Firms (**D-B**), who can construct a design/build TXDOT Area Engineer/Maintenance facility in Belton, Bell County, Texas hereinafter referred to as the project (**PROJECT**), on new state-owned property (**NEW SITE**), in exchange for the existing Belton Area Engineer/Maintenance Facility, Killeen Maintenance Facility and Temple Maintenance Facility, hereinafter referred to as (**TxDOT PROPERTY**).

TxDOT is issuing this RFQ/RFP in accordance with Texas Transportation Code, Section §201.1055, Agreements with Private Entities, (House Bill 2702, 79th Legislative Session) that authorizes the department and a private entity that offers the best value to the state to enter into an agreement for the acquisition, design, construction, renovation, including site and site development, of a building or other facility required to support department operations" (capital improvements).

Funding for the PROJECT will be provided through an exchange of the TxDOT PROPERTY located at 1502 Old Holland Road, Belton, 76513; 2102 Martin Luther King Blvd., Killeen, 76541; 3801 North 3rd, Temple, 76501, Bell County, Texas, (TxDOT PROPERTY), more particularly described by metes and bounds on Exhibit A1, A2 and A3, attached hereto and made a part hereof for all purposes. The current appraised value of the TxDOT PROPERTY is $1,601,914.00. If the PROJECT costs are less than the value of the TxDOT PROPERTY, the D-B will be required to pay the difference in cash upon exchange of the TXDOT PROPERTY which will occur upon satisfactory completion and acceptance by TxDOT of the proposed improvements. If the PROJECT (construction and/or value of existing buildings and/or new improvements) costs are more than the value of the TxDOT PROPERTY, the D-B may provide different options for consideration as part of their proposal, but it must include the proposed exchange value and either provide proposed modified scope of work and/or detail the amount of funding necessary to complete the PROJECT.

If the PROJECT costs are more than the value of the TxDOT PROPERTY, the D-B has the option to donate the difference. These options will be considered as part of the project review.

Negotiations on a Development Exchange Agreement will begin with the first ranked proposer who submitted the first ranked proposal amongst the top three proposals. In the event a mutually agreeable Development Exchange Agreement cannot be reached with the first ranked proposer, negotiations will be successively initiated with the second ranked and then third ranked proposer, if necessary.

In the event there are less than three proposals submitted, TxDOT reserves the right to initiate negotiations with the first ranked and then second ranked proposer, if there are two proposals and a mutually agreeable Development Exchange Agreement cannot be accomplished with the first ranked proposer. TxDOT also reserves the right to negotiate a Development Exchange Agreement in the event there is only one proposal submitted and TxDOT finds it meritorious.

The successful proposal will be the one that provides the best design, best quality, and quantity, the shortest completion time, as well as exceptional qualifications, key personnel, cost and best overall value. A recommendation will be made to the Commission for award of a Development Exchange Agreement to the successful proposer. TxDOT reserves the right to withdraw this

RFQ at any time without compensation to any proposer prior to approval of an award by the Commission.

The RFQ/RFP submittal must include the (1) Letter of Interest, (2) a Conceptual Project Development Plan, (3) a Statement of D-B and Key Personnel Qualifications, (4) a Preliminary Proposal Project Cost Estimate, (5) Financial Qualifications and the (6) State of Texas HUB Subcontracting Plan (Mandatory). The successful proposal will be the one that provides the best value based on the preferred site location, site adaptation, design, desired project program/scope of work, best quality and quantity, and the shortest completion time, as well as exceptional qualifications, key personnel and cost.

Multiple proposals from individual proposers will be accepted, but each proposal must be submitted separately.

TxDOT reserves the sole right to terminate this process, to not award the RFQ/RFP, and to cancel or modify this solicitation process at any time. In no event will the State of Texas, TxDOT or any of their respective agents, representatives, consultants, directors, officers, or employees be liable for, or otherwise obligated to reimburse, the costs incurred in preparation of this RFQ/RFP, or any related costs. The prospective D-Bs shall bear all costs incurred in the preparation and presentation of their submittals. The RFQ/RFP submittals will become the property of TXDOT.

RFQ/RFP SUBMITTAL DEADLINE AND DELIVERY LOCATION

Sealed RFQ/RFP submittals must be received and time stamped by **2:30 PM, local time, Monday, September 25, 2006**. Sealed RFQ/RFP submittals will only be received at the following location:

TEXAS DEPARTMENT OF TRANSPORTATION
WACO DISTRICT HEADQUARTERS
100 S. Loop Dr. , Waco, TEXAS 76704
FRONT DESK (254) 867-2700
ATTN: Michael Bassett

It is the sole responsibility of the D-B to ensure that a sealed RFQ/RFP submittal for each proposal arrives at the above location, by the specified deadline regardless of the method chosen by the D-B for delivery. A faxed or electronically transmitted RFQ/RFP submittal will **NOT** be accepted.

Sealed RFQ/RFP submittals must be received and time stamped by
Monday, September 25, 2006 at 2:30 PM, local time

GENERAL DEFINITIONS

Unless the context clearly requires another meaning, the following terms shall have the meaning assigned herein:

Accepted Plans and Specifications means the design narrative and performance specifications and design drawings.

Architect/Engineer *(A/E)* means a person registered as an architect pursuant to Texas Occupations Code Chapter 1051, as a landscape architect pursuant to Texas Occupations Code Chapter 1051, and a person licensed as a professional engineer pursuant to Chapter 1001, or a firm employed by Developer to provide professional architectural or engineering services and/or performing certain Development and Exchange Agreement administration responsibilities.

Closeout means the process of completing all details of both construction and commissioning. The Closeout period is the time from the Date of Substantial Completion until final conveyance of the TxDOT Property.

Close-out Documents means the Record Drawings, standard product brochures, product/equipment maintenance and operations instructions, manuals, test reports, commissioning reports identified in the Development and Exchange Agreement hereto, warranties, etc., and as may be further defined or identified and required by the Contract Documents.

Closing Documents: Deed of Trust, title policy, settlement statement(s) and all related closing documents defined or identified and required by the title company. The record drawings, standard product /equipment maintenance and operations instructions, manuals, test reports, commissioning reports identified, warranties, etc., and as may be further defined and identified and required by other contract documents.

Commissioning means placing the PROJECT into full and proper operation, including starting and adjusting equipment and systems, functional performance testing, otherwise demonstrating compliance with the Contract Documents, correcting defects and obtaining any necessary permits.

Contract means the Development and Exchange Agreement between TxDOT and the Developer.

Contract Date is the effective date of this Development and Exchange Agreement first set forth above.

Contract Documents means the Accepted Plans and Specifications, Development and Exchange Agreement; Absolute Guaranty; any Change Orders issued after execution of the Development and Exchange Agreement; Close-Out documents; performance and payment bonds; and insurance requirements set forth herein which are all incorporated in this Development and Exchange Agreement for all purposes.

Contract Sum means the total compensation payable to the Developer for completion of the Work and Professional Design Services and as subsequently adjusted by any Change Order(s). (This does not include financing costs.)

Contract Time means the period between Date of Commencement and the date scheduled for Substantial Completion and as may be amended by Change Order(s).

Contractor means the General Contractor responsible for all construction.

Change Order means a written modification of the Development and Exchange Agreement between TxDOT and the Developer that changes the Contract Sum or the Contract Time.

Claim means a dispute for which an agreed resolution between the Developer or its successor and TxDOT cannot be made informally through the Division/District level and has been filed as a contract claim.

Construction Drawings means the construction drawings prepared by the Architect/Engineer that establish in detail the quality levels of materials and systems required for the PROJECT.

Day means a calendar day, unless otherwise specifically stipulated.

Date of Commencement means the effective date of this Development and Exchange Agreement.

Delivery Dates means the respective target dates for Substantial Completion of each phase of the Work as set forth in the PROJECT Schedule.

Design-Build Firm the private entity responsible for land acquisition, design and construction of a replacement facility for TxDOT Project.

Design Development Drawings means the work product of the Architect/Engineer which illustrate and describe the refinement of the design of the PROJECT, establishing the scope, relationships, forms, size and appearance of the PROJECT by means of plans, sections and elevations, typical construction details, and equipment layouts.

Developer means the design-builder effective as of the date of the Development and Exchange Agreement.

Developer's Authorized Representative (DAR) is defined in the Development and Exchange Agreement.

Dispute means a disagreement between TxDOT and the Developer or its successor over the interpretation of the Contract Documents.

Environmental Laws means Comprehensive Environmental Response, Compensation and Liability Act of 1980, as amended ("CERCLA"), 42 U.S.C. §9601 et seq.; the Toxic Substance Control Act ("TSCAS"), 15 U.S.C. §2601 et seq.; the Hazardous Materials Transportation Act, 49 U.S.C. §1802; the Resource Conservation and Recovery Act

First-ranked the proposal that provides the best value to the department prior to negotiation of the terms of the Development and Exchange Agreement.

Final Acceptance and Completion means the date when the Work is fully performed, according to the Development and Exchange Agreement, as verified by a certificate of substantial completion issued by the Architect/Engineer, and the PROJECT is delivered to TxDOT in accordance with the provisions of this Development and Exchange Agreement; subject to TxDOT's right to challenge such determination of Final Completion as set forth herein.

Force Majuere means natural disaster (including but not limited to extreme and destructive weather, earthquake, flooding, subsidence), war, riot, strike, civil disobedience not under the control of either party.

Full Time Employees (FTE) means the number of employees allocated by TxDOT for that location.

General Contractor means the prime construction contractor responsible for building the new facility.

Guaranty means the Absolute Guaranty of Development and Exchange Agreement of even date herewith executed by the D-B for the benefit of TxDOT, pursuant to which D-B guarantees the full performance of all obligations of Developer under this Development and Exchange Agreement.

Hazardous Materials and ***Known Hazardous Materials*** as defined in the Development and Exchange Agreement, Section 2.7.2 and 2.7.4

Non Developer Work is defined as all work on the new site that is not performed under the Development and Exchange Agreement.

PROJECT means the design and construction of certain improvements upon the Site consisting of (i) the base building elements and interior improvements, the scope of which is outlined in the Accepted Plans and Specifications and (ii) the Site work on the Site consisting of landscaping, sidewalks, driveways, parking areas and related improvements, all in accordance with the drawings, plans and specifications described on Attachment F through J and included within the Accepted Plans and Specifications and any Change Orders thereto.

Project Schedule means the periods of time needed for staging and completion of each element of the Work between Date of Commencement and the date scheduled for Substantial Completion of each phase of the Work, as may be amended by Change Order. Use MS Project for project schedule.

Request for Qualifications and Proposal (RFQ/RFP) means the procurement document issued by TxDOT and any Addenda and the Development and Exchange Agreement and any attachments and/or Exhibits.

Samples means the physical examples of materials, equipment or workmanship, that are representative of some portion of the Work and which establish standards by which the Work will be judged for acceptance.

Schedule of Values means the detailed breakdown of the cost of the materials and labor necessary to accomplish the Work attached hereto as Exhibit **I**, as amended pursuant to the Development and Exchange Agreement.

Site means land on which the PROJECT will be built or land where the current TxDOT facility is located.

Subcontractor means a person or organization who, as an independent contractor, contracts directly or indirectly with the Developer or its successor to perform part or all of the Work. The term includes the Architect/Engineer. TxDOT acknowledges that Developer may subcontract with a General Contractor, to perform all or a portion of the Work and that that general contractor may in turn, as a subcontractor to developer, subcontract with additional subcontractors to perform part or all of the Work.

Submittals means the Design Submittals and Substantiation Submittals

Substantial Completion means, the date established by the Architect/Engineer and, upon acceptance by TxDOT in accordance with the provisions of this Development and Exchange Agreement, by issuance of a Certificate of Substantial Completion, signed by the Architect/Engineer, confirming that the Work for the PROJECT in question is sufficiently complete in accordance with the Accepted Plans and Specifications so that TxDOT can occupy or utilize the improvements covered in the applicable phase for their intended use without material interference from Developer's on-going performance of those portions of the Work which remain to be completed.

Substantiation Submittals means the specific submittals required under the Accepted Plans and Specifications.

TxDOT means the Texas Department of Transportation acting on behalf of the State of Texas.

Unit Price Work means Work to be paid for on the basis of unit prices.

Unilateral Change Order (ULCO) means a Change Order issued by TxDOT without the agreement of the Developer.

Work means all Architect/Engineer services and PROJECT administration for, and the complete construction of, the PROJECT, together with procurement services, and includes labor necessary to produce such construction, and materials and equipment incorporated or to be incorporated in such construction. The parties expressly agree that the Work shall not include Non-Developer Work (hereinafter defined). (However, TxDOT may require the Developer to facilitate staging of the Non-Developer Work and will coordinate certain Non-Developer Work without a Change Order as provided in the Development and Exchange Agreement. In the event Non-Developer Work causes a change as to time or scope of Work for the Developer, a Change Order may be issued in accordance with the provisions of the Development and Exchange Agreement.

DESCRIPTION OF PROJECT

The Texas Department of Transportation (TxDOT), an agency of the State of Texas, is issuing this **REQUEST FOR QUALIFICATIONS AND PROPOSALS (RFQ/RFP)** to select from prospective qualified Design-Build firms (D-B), who can design/build a TXDOT Area Engineer/Maintenance facility in Belton, Bell County, Texas, hereinafter referred to as the project (PROJECT), in exchange for the existing Belton Area Engineer/Maintenance Facility, Killeen Maintenance Facility and Temple Maintenance Facility, hereinafter referred to as (TxDOT PROPERTY) on the **(**NEW SITE).

A. **TXDOT NEW PROPERTY**

The new site is approximately 20 acres out of the James P. Wallace Survey located at the Northeast corner of Loop 121 and Connell Street, Belton, Bell County, Texas, more particularly described by Exhibit B. The utility and topographic site survey is provided for design purposes and cost estimates and is referenced as Attachment D. The geotechnical report will be issued as an addendum at a later date.

The property is located within the city of Belton and has general utilities including water located along Loop 121 frontage, and sanitary sewer located at the North end or back of the property. TXU provides electrical and natural gas service along the frontage of Loop 121. Telephone service is provided by Southwestern Bell.

B. DEVELOPMENT REQUIREMENTS

In general, the scope of work shall include site clearing, grading and drainage, site improvement work, surface parking, necessary infrastructure, necessary buildings and associated facilities, parking areas, access driveways and roadway work, disposal/demolition of any existing buildings and structures on the new site, all necessary foundation work, substructure work, excavation, drainage, utility extensions and coordination, erosion and sediment control work items. All materials and improvements constructed are to be inspected and approved by TxDOT, as well as by any appropriate local inspection entities. The D-B shall be responsible for obtaining and paying all permits and fees as appropriate.

The D-B will be responsible for accomplishing site improvements based on the owner provided civil engineering drawings and specifications by DFW engineering and included in attachment (?), DFW engineering will be available to the D-B for Civil construction administration during the project. The D-B will be responsible for all construction administration and management including all aspects of the PROJECT's development quality assurance for construction, to ensure the success of the entire Project through final completion (Closeout & Commissioning), and warranty. TXDOT reserves the right to have staff or third-party consultant to provide on-site construction administration services for quality assurance.

The PROJECT must comply with the latest editions of the following building codes and regulations: ADA (TAS), IBC, UMC, UPC, NEC, NFPA, EPA, TCEQ and State Energy Code. All requirements pertaining to the preparation and approval of the environmental documents, permits, water quality, and public involvement issues must be in accordance with state and federal regulations, policies and procedures.

C. SCOPE OF WORK

The PROJECT includes the design and construction of new facilities that will replace the existing facilities at the new TxDOT site. The specific building design is shown on the **Attachment M** drawings.

The PROJECT will include the following Work:

Area Engineer and Maintenance Office Building: (7,708 Gross Square Feet) the office portion of this facility includes dedicated office work space for the area engineering and maintenance staff, a large meeting room, a conference room, storage, and restrooms. This building will serve both employees and the public. The construction will be a single-story building with concrete slab on grade foundation, pre-engineered steel structure, stone veneer on metal stud framing with a standing seam, metal roof. Interior finishes will be vinyl tile floors, painted gypsum board walls and suspended acoustical ceilings in office spaces and ceramic tile floors and walls in restrooms. The mechanical system will be a split-system with heat pumps.

Shop/Lab and Storage Building: (9,904 gross square feet). This building is separated into general equipment storage, signal shop, vehicle maintenance shop and laboratory, restrooms with showers and lockers, and a radio equipment room. This building will only serve TxDOT staff and will be in the secured area. The construction will be a pre-engineered steel building with concrete foundation and metal wall and roof panels. The restrooms and radio room will have split HVAC system, and the shop and storage will be heated and vented only.

Vehicle Storage Building: (4,000 gross square feet). Slab on grade foundation with pre-engineered metal building structure with roof purlins, standing seam metal roof and metal wall panels.

Truck Wash Bay: (1,735 gross square feet). The Truck Wash Bay is a pre-engineered building for washing the operational vehicles. This building will have a concrete foundation with 8' high CMU walls around the wash bay and equipment shed for the closed-loop, recirculation washing equipment.

Fuel Island: The fuel island will contain two above-ground storage tanks; a 4,000 gallon tank for diesel and 2,000 gallon tank for unleaded fuel, located on a concrete foundation. The new fuel station will not include a canopy like the existing one and will be built to TxDOT standards. Near the gasoline fuel island, a concrete slab will be installed under this contract and TxDOT will install the LPG storage tank after final acceptance.

Exterior Maintenance Storage Yard: This open area will be used to accommodate storage and staging of roadway supplies and equipment related to typical operations. The yard will not include an equipment loading ramp like the existing site. The Yard must be relatively flat for material storage, but with adequate drainage to avoid standing water. The entire Yard will be secured with a perimeter, chain-link fence with manual gates. Asphalt tanks and radio tower will be provided and installed by TxDOT.

The PROJECT facilities are to be constructed based on the floor plans, elevations, drawings, specifications and facility design standards supplied by TXDOT in **Attachment M**. These are provided for the D-B's use in establishing the design scope, scale, size, materials, standards of quality of the new facilities and site improvements.

The D-B must engage a qualified architectural, engineering design team to provide the necessary professional services required to design and construct the described PROJECT facilities.

Construction Documents must be sealed by architects and engineers licensed to practice in the State of Texas.

D. FINANCIAL PLAN AND QUALIFICATIONS

The D-B who can demonstrate the qualifications to deliver the PROJECT as described herein and provide the best value and product for the State of Texas, will be awarded a contract in the form of a Development and Exchange Agreement (DEA). The selected D-B will enter into a DEA with TXDOT, an agency of the State of Texas. The PROJECT must be free and clear of any and all liens and debts (including but not limited to purchase money liens, mechanics, and material liens, tax liens, construction loan obligations).

E. MILESTONE DATES

The following dates are provided to assist the D-B in scheduling and planning:

• Issue RFQ/RFP (90 calendar days)	July 26, 2008
• RFQ/RFP Pre-submittal Conference	September 5, 2006
• RFQ/RFP Deadline	September 25, 2006
• Interviews with Top Three Rank D-B (5 working days)	October 2-6, 2006
• Select “Best Value” Proposals by Rank	October 26, 2006
• TxDOT Commission (Awards Contract)	November 16, 2006
• Execute DEA (21 calendar days)	December 7, 2006
• Issue Notice to Proceed (5 Working Days)	December 14, 2006
• Substantial Completion (360 Calendar Days)	December 10, 2007
• Transfer Property (30 Calendar Days)	January 9, 2008

F. PRELIMINARY PROJECT COST ESTIMATE

Each proposal should provide a detailed cost estimate for the, site development, professional design services, construction cost and all associated cost with scope of work for the total proposed Preliminary Project Cost. Fill out the attached Schedule of Values for your Cost Estimate that must be submitted as part of your Proposal. Failure to submit this information, use of another form or an incomplete form will be considered non-responsive and disqualify the proposal from consideration.

G. **DEVELOPMENT AND EXCHANGE AGREEMENT AND CLOSING**

The DEA will be signed upon acceptance by all parties when the best and final offer has been finalized. When TXDOT delivers the DEA to the successful D-B, the D-B will be expected to execute the Agreement within 21 days thereafter and deliver the contract and required performance and payment bonds from a qualified surety. The DEA and all related closing documents will be held in escrow at a Title Company approved by the department, until all proposed PROJECT buildings and site improvements are approved and accepted by TXDOT (Commissioning). Final closing will occur upon (Commissioning) and the completion and acceptance of all proposed improvements and closeout documents.

The actual exchange value of TxDOT Property will have been determined as stated in the Introduction.

H. CONCLUSION:

In conclusion, the facilities constructed as a result of this PROJECT should serve to support and provide a comfortable, safe, durable, cost-effective, environmentally sensitive and aesthetically appealing transportation maintenance facility.

DESCRIPTION OF TXDOT PROPERTY

The Texas Department of Transportation proposes to exchange land consisting of 10 acres more or less at the Belton site, 7.889 acres more or less at the Killeen site and 5.997 acres more or less at the Temple site, (TXDOT PROPERTY) with improvements, including buildings, fencing, radio tower, fuel tanks for diesel and unleaded gas at the Belton site, on-site utilities, paving and landscaping, located at 1502 Old Holland Road, Belton, 76513; 2102 Martin Luther King Blvd., Killeen, 76541; 3801 North 3rd, Temple, 76501, Bell County, Texas, more particularly described by metes and bounds on **Exhibits A1, A2, & A3**.

The TXDOT PROPERTY has all utilities available, water, electricity, septic system, gas. Public services including police, fire and emergency medical services are provided by the Cities of Belton, Killeen and Temple.

The TXDOT PROPERTY is located in the Southern portion of Texas and is responsible for providing and maintaining the transportation systems including but not limited to highway maintenance and roadway construction for the citizens of Texas in the surrounding cities of Belton, Killeen, Temple and in Bell County.

TXDOT requested a real estate appraisal report to establish market value of the fee simple interest of the subject whole property. Market Value of the real property described has been estimated based upon an independent appraisers opinion and in accordance with the Uniform Standards of Professional Appraisal Practices set forth under Standards Rule 2-2(b).

The appraisal was completed with ownership information, a survey and field notes, as well as any known hazardous materials and/or waste. Additional information may be secured from the Bell County Deed Records and the Bell County Appraisal District. The size of the property and its legal description were assumed to be correct. The use of this report by others is not intended by the appraiser and cannot be released without prior written approval and in compliance with the Texas Open Records Act, Texas Government Code, Chapter 552, Section 552.301.

As described in the appraisal, the site is desirable for commercial or light industrial development with level topography and direct frontage provided on FM 436 at the Belton site, FM 2410 at the Killeen site and IH 35 Northbound Frontage at the Temple site. The properties are located at 1502 Old Holland Road, Belton, 76513; 2102 Martin Luther King Blvd., Killeen, 76541; 3801 North 3rd, Temple, 76501, Bell County, Texas and is surrounded by a combination of commercial, office, industrial and retail establishments causing high traffic flows along the corridors.

The property is subject to all covenants, easements, reservations, restrictions, and other matters of public record applicable to the TXDOT PROPERTY as of the date hereof.

The property is under the jurisdictions of Bell County, Belton ISD, City of Belton, Bell county Road, Clearwater UWCD, City of Killeen, Killeen ISD, City of Temple and Temple ISD taxing authorities; currently there are no taxes assessed or zoning because the property is owned and used by the State of Texas. The tax exemption is not transferable upon exchange of the property to a private entity. Proposers have the duty to obtain a legal opinion regarding zoning and taxing authorities' policy regarding proration of taxes. The D-B is charged with due diligence to determine the existence and magnitude of adverse easements, encumbrances, and environmental issues, including endangered species and endangered species natural habitats. TXDOT will make all known disclosures of the property including information on toxic wastes or hazardous materials which might affect the subject property. The D-B must complete its own assessment of the property

and due diligence before the exchange and final acquisition of the TXDOT PROPERTY. The following are the physical descriptions of the existing building(s) and functions.

Belton Area Engineer/Maintenance Facility (FM 436) 1502-1506 Holland Road, Belton, Texas.
The property consist of approximately 10 acres out of the M.F. Connell Survey, Abstract 6.
Area Engineer Building: Constructed in 1958 with approx. 3,430 square feet. Consisting primarily of office space to support the engineering staff.

Engineering Building: Approx. 600 square feet consisting of primarily office space for constructions inspectors.

Material Testing Building: Constructed in 1957 with approx. 1,200 square feet. Consist of office space and laboratory testing area for construction materials.

Maintenance Office and Shop/Warehouse Building: Constructed in 1958 with approx. 3,864 square feet. The office portion of this facility includes dedicated office work space for the maintenance staff. The rear of the building includes a simple maintenance shop comprised of an open area.

Maintenance Equipment and Storage Building: Constructed in 1958 with approx. 3,360 square feet. This building is separated into equipment storage and general storage sheds, and it is used to perform general and preventative maintenance of vehicles and equipment.

Storage Shed: Approx. 480 square feet.

Vehicle and Equipment Service Building: Constructed in 1963 with approx. 700 square feet. Consist of open shop area with vehicle and equipment service pit.

Fuel Island/Canopy: Constructed in 1957 with approx. 247 square feet. Contains two underground storage tanks; a 4,000 gallon tank for diesel and 4,000 gallon tank for unleaded fuel.

Exterior Yard Storage: This open area is used to accommodate storage and staging of roadway supplies and equipment related to typical operations. The yard includes an equipment loading ramp. The existing vertical asphalt tanks will be moved to the new site.

Killeen Maintenance Facility (FM 2410) 2102 Martin Luther King Blvd., Killeen, Texas
The site contains approximately 7.899 acres out of the James C. Mckee Survey, Abstract 992.

Maintenance Office and Shop/Warehouse Building: Constructed in 1976 with approx. 3,815 square feet. The office portion of this facility includes dedicated office work space for the maintenance staff. The rear of the building includes a simple maintenance shop comprised of an open area with an automotive lift, several equipment and material storage bays and a loading dock. There is also a fuel island and canopy connected to the building with gas and diesel pumps. The existing above ground storage tanks will not remain and will be removed by TxDOT.

Temple Maintenance Subsection/Sign Shop, (IH 35) 3801 North 3rd Street, Temple, Texas
The site contains approximately 5.997 acres of land out of the URI Holbrook Survey .

Maintenance Office and Shop/Warehouse Building: Constructed in 1959 with approx. 3,671 square feet. The office portion of this facility includes dedicated office work space for the maintenance staff. The rear of the building includes a simple maintenance shop comprised of an open area.

Maintenance Equipment and Storage Building: Constructed in 1959 with approx. 4,466 square feet. This building is separated into equipment storage and general storage sheds, and it is used to perform general and preventative maintenance of vehicles and equipment and to store materials. It consists of a closed shop area with vehicle and equipment service pit, fuel island and canopy. The existing above ground storage tank will not remain and will be removed by TxDOT.

All existing facilities at the TxDOT PROPERTY will remain intact and must remain continuously operational throughout the course of the PROJECT construction until final acceptance by TXDOT of the PROPOSED SITE and facility.

DISCLOSURES/DISCLAIMERS: TxDOT makes the following disclosures on information relating to existing Surface and Subsurface Conditions and Structures:

A. TxDOT may have identified certain reports and/or tests, which have been utilized by TXDOT to access conditions of the TxDOT PROPERTY. The D-B may rely on the general accuracy of the technical data contained in such reports but not upon other data, interpretations, or opinions contained in such reports, or upon the completeness thereof for the purposes of preparing its proposal and estimating value of the TxDOT PROPERTY.

B. When such reports are not included in the Proposal documents, copies will be made available by TxDOT to any D-B on written request.

C. Any reports not a part of the RFQ/RFP may be made available upon request by the D-B. TXDOT is not responsible for any interpretation or conclusion drawn from such reports.

D. Hazardous Materials: TxDOT will make full disclosure of hazardous materials based on its best information and belief, if they apply to asbestos, PCB's, petroleum, radioactive materials, and other hazardous wastes at site.

E. Access to Site: On request, TxDOT will provide each D-B access on and to the existing site to conduct examinations, investigations, explorations, tests, and studies as it deems necessary for evaluation of exchange cost for submission of a proposal. The D-B must fill all holes and clean up and restore the site to its former condition upon completion of such explorations, investigations, tests, and studies. The D-B assumes any and all risks of damage to its own, or its contractors' or agents; equipment and injury to its own or contractors' or agents' employees and TxDOT's property, invitees and employees caused by the D-B, its employees, contractors and agents in conducting the preceding activities.

F. The D-B acknowledges that the TxDOT PROPERY is proposed "as is" with all faults. Any representations or warranties as to the condition of such TxDOT PROPERTY <u>that may have been made by any employee or agent of TXDOT have no authorization or effect.</u>

G. The D-B hereby waives any and all causes of action, claims, demands, damages, and liens based on any warranty, express or implied, including but not limited to any implied warranty of suitability for a particular purpose, any and all warranties of habitability, and any other implied warranties not expressly set forth.

H. The D-B acknowledges and agrees that it will fully exercise the right to inspect the TXDOT PROPERTY for any defects as to the suitability of the Property for the D-B's intended purpose.

I. The D-B and/or is assignees must sign an Indemnity and Hold-Harmless Agreement prior to inspecting TxDOT PROPERTY.

DESCRIPTION OF TXDOT PROPERTY
(NEW SITE)

TxDOT purchased approximately 20 acres on April 2, 2003 for the new Belton Area Engineer/Maintenance Facility. The property is vacant without any improvement, located in the southerly portion of the City of Belton. The property front Loop 121 with IH-35 located one block east of the property and US 190 and State Highway 317 (South Main Street) located 2 miles north of the property and FM 436 (Holland Road) located 2 miles east.

The property is within the city limits of Belton in a commercial and mix use area, with all utilities available including water, sewer, electricity and natural gas. A utility and topographic Site Survey are referenced as Attachment D. The site geotechnical Report is referenced as Attachment E will be used through an addendum at a later date.

The NEW SITE is located in Central portion of Texas and is responsible for providing and maintaining the transportation systems including by not limited to highway maintenance and roadway construction for the citizens of Texas in the surrounding cities of Belton, Temple, Killeen, Troy, Harker Heights, Nolanville, Rogers, Little River Academy, Holland, Bartlett and Morgans Point Resort City, in Bell County.

The following information is provided as result of a real estate appraisal report of the NEW SITE when it was acquired in January 2003. The appraisal was completed by an independent appraiser in accordance with the Uniform Standards of Professional Appraisal Practices set forth under Standards Rule 2-2(b). The use of the report by others is not intended by the appraiser and cannot be released without prior written approval and in compliance with the Texas Open Records Act, Texas Government Code, Chapter 552, Section 552.301.

The property was zoned Agricultural by the City of Belton (Zone A). The property is subject to all covenants, easements, reservations, restrictions and other matters of public record applicable to the NEW SITE as of the date hereof. There are no adverse restrictions which affect the property.

The property is under the jurisdictions of Belton and Bell County taxing authorities; currently there are no taxes assessed or zoning because the property is owned and used by the State of Texas. The tax exemption is not transferable upon exchange of the property to a private entity. Proposers have the duty to obtain a legal opinion regarding zoning and taxing authorities' policy regarding proration of taxes. There are no known adverse easements or encumbrances or environmental issues, including endangered species and endangered species natural habitats. TXDOT will make all known disclosures of the property including information on toxic wastes or hazardous materials which might affect the subject property, however, the D-B is responsible for completing his own assessment of the property and the necessary due diligence before construction.

DISCLOSURES/DISCLAIMERS: TxDOT makes the following disclosures on information relating to existing Surface and Subsurface Conditions and Structures:

J. TxDOT may have identified certain reports and/or tests, which have been utilized by TXDOT to access conditions of the TxDOT PROPERTY. The D-B may rely on the general accuracy of the technical data contained in such reports but not upon other data, interpretations, or

opinions contained in such reports, or upon the completeness thereof for the purposes of preparing its proposal and estimating value of the TxDOT PROPERTY.

K. When such reports are not included in the Proposal documents, copies will be made available by TxDOT to any D-B on written request.

L. Any reports not a part of the RFQ/RFP may be made available upon request by the D-B. TXDOT is not responsible for any interpretation or conclusion drawn from such reports.

M. Hazardous Materials: TxDOT will make full disclosure of hazardous materials based on its best information and belief, if they apply to asbestos, PCB's, petroleum, radioactive materials, and other hazardous wastes at site.

N. Access to Site: On request, TxDOT will provide each D-B access on and to the existing site to conduct examinations, investigations, explorations, tests, and studies as it deems necessary for evaluation of exchange cost for submission of a proposal. The D-B must fill all holes and clean up and restore the site to its former condition upon completion of such explorations, investigations, tests, and studies. The D-B assumes any and all risks of damage to its own, or its contractors' or agents; equipment and injury to its own or contractors' or agents' employees and TxDOT's property, invitees and employees caused by the D-B, its employees, contractors and agents in conducting the preceding activities.

O. The D-B acknowledges that the TxDOT PROPERY is proposed "as is" with all faults. Any representations or warranties as to the condition of such TxDOT PROPERTY <u>that may have been made by any employee or agent of TXDOT have no authorization or effect.</u>

P. The D-B hereby waives any and all causes of action, claims, demands, damages, and liens based on any warranty, express or implied, including but not limited to any implied warranty of suitability for a particular purpose, any and all warranties of habitability, and any other implied warranties not expressly set forth.

Q. The D-B acknowledges and agrees that it will fully exercise the right to inspect the TXDOT PROPERTY for any defects as to the suitability of the Property for the D-B's intended purpose.

R. The D-B and/or is assignees must sign an Indemnity and Hold-Harmless Agreement prior to inspecting TxDOT PROPERTY.

PROPOSAL REQUIREMENTS AND INSTRUCTIONS

A. INSTRUCTION

Each Proposal shall be submitted in a separate sealed envelope or package and identified with the deadline date and charge number (as they appear on the cover sheet) in the lower left-hand corner, the name and address of the D-B in the upper right-hand corner. If this information is not on the Proposal or submitted past the deadline, it will be returned unopened to sender to the return address indicated on the envelope.

1. Submit five (5) copies of the Proposal on letter (8½ x 11) sized white paper and spiral bound with all pages sequentially numbered and in a sealed package. Ringed binders are not acceptable. All criteria sections and subsections need to be separated with clearly marked tabs.
2. If the submission is sent through the mail or other delivery system, the sealed envelope or box shall be enclosed in a separate envelope marked “PROPOSAL ENCLOSED”.
3. Any additional information may be submitted in a separate document marked "Appendix".
4. All Exhibits included in the Proposal shall be in the same envelope or box. Clearly identify each separate item with the D-B’s name and PROJECT name and number. Submit drawings, specifications, and other data as indicated to adequately explain the design intent and the character of the proposed PROJECT. Incorporate into the exhibits all substantiation specified in the Specifications.
5. The Proposal shall be sealed with the financial plan/terms, cost estimate as described in the RFQ/RFP in a separate envelope within the submittal. **ALL CONFIDENTIAL FINANCIAL INFORMATION** should be clearly labeled on each proposal.
6. Receipt of all Addenda to this RFQ/RFP, if any, must be acknowledged by attaching a signed copy of each Addendum to the RFQ/RFP submittal. All Addenda shall become part of the requirements of this RFQ/RFP. Failure to acknowledge receipt of an Addendum will result in rejection of the RFQ/RFP submittal. All Addenda will be posted at same websites as the RFQ/RFP.
7. All materials submitted will become the property of TXDOT.
8. Display Boards must not exceed the maximum size of 48” x 60”. Models (Optional) maximum size of 48” x 60” by 36” high. Drawings must not exceed the maximum size 30”x42” (11”x17” duplicates for inclusion in a bound submittal document are acceptable). Models and display boards must be delivered by hand to and under the same deadlines as the RFQ/RFP itself.
9. TxDOT reserves the right to publish or display publicly all exhibits.
10. Promptly notify TxDOT of all conflicts, errors, ambiguities, and discrepancies, which the D-B has discovered in the RFQ/RFP.

TxDOT will not bear liability for any costs incurred in the preparation and submission of any RFQ/RFP submittal. TxDOT is not authorized to compensate participants who submit proposals.

TxDOT reserves the right to request further documentation or information, and to discuss an RFQ/RFP submittal for any purpose in order to answer questions or to provide clarification.

Documents will not be issued to subcontractors or suppliers.

Neither TxDOT nor any consultant that has been hired for this PROJECT or who has been involved in the preparation of the Proposal documents assumes any responsibility for errors or misinterpretations resulting from the use of incomplete sets of the Proposal documents.

Your RFQ/RFP submittal may not be changed, amended or modified after the submittal deadline.

B. REQUIREMENTS FOR PROPOSAL

The D-Bs must include at a minimum the following information as part of their proposals:

1. LETTER OF INTEREST

The Letter of Interest Form is included in the Proposal. Additional copies may be obtained from TXDOT.

a) All blanks on the form must be completed by printing in black ink or by typewriter.
b) In addition to signatures, names must be typed or printed in black ink.
c) The address and telephone number for communications regarding the proposal must be shown.
d) State contractor license must be shown.
e) Design professional registration numbers must be shown.
f) Signatures must be notarized.

2. CONCEPTUAL PROJECT DEVELOPMENT PLAN

Describe the general approach and strategy to advancing the project development, the results expected from implementations of the Conceptual Project Development Plan and the critical factors for the PROJECT's success based on the Schematic Site Design proposal by the D-B. Provide the basis for the site selection.

Provide a synopsis of the D-B's implementation plan to acquire, develop, design and construct the PROJECT.

SITE DEVELOPMENT: Develop a conceptual site plan. Show building locations, orientations, detention areas, site pedestrian and vehicular circulation, surface parking areas, roads, major landscaping and pedestrian access points and describe any demolition required. Indicate the building footprint for any potential expansion to the new office building. It is the responsibility of each D-B, to submit in the proposal the general, local, and site conditions that may affect cost, progress, or performance of the work, considering federal, state, and local laws and regulations that may affect cost, progress, and performance of the work.

UTILITIES: This includes any and all existing easements and services and proposed connections to the PROJECT improvements. TxDOT agrees to execute any additional documents as may be reasonably required by the utility providers with respect to such use and access. The D-B its successors and/or assigns assume any and all liability for any of their activities related to these access rights.

ARCHITECTURAL: Submit one or more single line schematic floor plan for each building which effectively indicates to TxDOT that the function, circulation, and life safety issues have been assessed and can be met by the proposed design. Include core and vertical circulation areas. Provide a schematic exterior wall section that identifies the floor–to–floor

heights of all new construction. Provide at least one (specify more if necessary) major elevation, preferably the front or primary elevation for each building. The design narrative may be very limited at this stage of the design development. Discuss the visionary type architectural approach to be taken for the PROJECT.

STRUCTURAL: Provide a narrative, describing probable system materials, load and general design criteria and any unusual design conditions. Identify on the architectural plan or a separate structural plan, the typical bay spacing.

MECHANICAL: Provide a narrative statement of general compliance with the PROJECT requirements and note any proposed variations to the document. Provide a narrative, explaining proposed type of mechanical system, listing the major equipment and rough order–of–magnitude sizes, list any environmental concerns and actions required to address them.

ELECTRICAL: Provide a narrative statement of general compliance with the Performance Specifications/Quality Criteria (PS/QC) and note any proposed variations to the document. Include a statement related to the intent to meet or exceed minimum energy codes design criteria. Provide a narrative, explaining proposed type of electrical system, listing the major equipment and rough order–of–magnitude sizes, list any environmental concerns and actions required to address them.

ADDITIONAL REQUIREMENTS:

1. All additional land or areas and access thereto required for temporary construction facilities, construction equipment, or storage of materials and equipment to be incorporated into the work are to be obtained and paid for by the D-B Team.

2. Work at the Site by Others: If any work is to be performed at the site by TxDOT or others (such as utility companies), provide Contract Documents and Construction Procedures for identification of the general nature of this work.

3. Before submitting a proposal each D-B shall conduct additional or supplementary examinations, investigations, explorations, tests, studies, or collect data concerning conditions (surface, subsurface, and underground facilities) at or contiguous to the site needed to determine cost, progress, or performance of the work, or to determine means, methods, techniques, sequences, or procedures of construction to be employed. The D-B should also assess the cost of safety precautions and programs incident to the PROJECT that are necessary for performing the work in accordance with the delivery date and guaranteed maximum price, if any.

4. TxDOT has separate funding to pay for furniture, relocation and owner-provided equipment associated with this PROJECT. TxDOT will purchase and install modular workstations and system furniture needed for the PROJECT. Existing stand-alone office furniture used in enclosed, hard-walled offices will also be used. Electrical and telecommunications equipment will be installed in the new facility by the D-B in coordination with TxDOT and modular systems vendor.

5. Submit a conceptual development, implementation plan, and schedule based upon current levels of information, including construction start dates, anticipated

completion dates, final acceptance dates, and other major milestones. Roles and responsibilities must be clearly defined, including the use of major subcontractors, subconsultants and proposed HUBs.

6. The D-B shall include a PROJECT schedule identifying the projected completion dates of all improvements and date of delivery. Completion of improvements in less than 380 days will be considered more favorably in the proposal selection. If the construction dates can be accelerated or need to be extended, please note this on your Conceptual Development Project Plan. Also include the PROJECT schedule that will be incorporated into the Agreement. (See previously referenced Milestone Dates).

3. STATEMENT OF DESIGN-BUILD FIRM QUALIFICATIONS AND KEY PERSONNEL

The D-B should include in their proposal, qualifications including depth of experience of the firm and key personnel along with a proposal for financing, planning, design, construction, cost controls and/or cost effective development and proven experience necessary for PROJECT delivery.

A. Demonstrate through clear documentation that the D-B possesses the qualifications necessary to perform the work. Clearly present the D-B's experience, including success in delivering similar projects of this kind, complexity and magnitude. Demonstrate knowledge, ability and experience of the D-B to effectively deliver the PROJECT on time, within the scope, and on budget. Describe the D-B's experience working together on previous similar design/build projects (no more than 5 projects) with land acquisition.

B. The D-B must include the extent and depth of experience of the key personnel, including all potential developer responsibilities demonstrated by the experience of the team members, management team and all key personnel listed.

C. Submit key members' resumes, especially that of the D-B's Project Manager. Resumes should include project descriptions, applicable client references, location and address summaries. Awards, licenses, registrations and certifications shall be submitted in a separate volume labeled "Appendix." Standard corporate brochures and marketing material may be included as additional information in an "Appendix."

D. The D-B must demonstrate that sufficient qualified and knowledgeable staff (both prime and sub-providers) are available, or will be available upon commencement of the DEA.

E. All necessary services and service providers and HUBs ancillary to approval of the DEA will be considered subcontractors for the purpose of the proposal.

4. PRELIMINARY PROJECT COST ESTIMATE

The Preliminary Project Cost Estimate includes all land and design and construction costs (principal and interest) for the PROJECT including closing cost. The Preliminary Project Cost Estimate should include the following minimum cost breakdown shown on the **Attachment I** Schedules of Values. Fill out this form completely and submit in a sealed envelope as part of the submittal. See the instructions for details.

5. FINANCIAL QUALIFICATIONS

The D-B is responsible for identifying any information it believes is entitled to confidentiality under the Public Information Act, Texas Government Code, Chapter 552, by placing the word "CONFIDENTIAL" on the applicable pages.

Provide a proposed financial plan based on the level of available project information, including proposed sources and uses of funds for the PROJECT.

A. Provide as a minimum the following:

(1) Updated financial statements that describe all equity members for the most current three years, audited by a certified public accountant in accordance with generally accepted accounting principals (GAAP). Unaudited financial statements must be certified as true and correct and accurate by the chief financial officer or the treasure of the Private Entity.

(2) Financial Statements must include

(a) Opinion Letter (if audited financial statements are provided). If a D-B is a joint venture or a partnership, separate letters for the individual equity participants are acceptable as is a single letter covering all equity participants.

(b) Balance Sheets (with notes to the financial statements)

(c) Income Statements

(d) Statement of changes in cash flow.

(3) A statement indicating any material changes in financial condition for the past three years. Examples of material changes may include but are not be limited to:

(a) Default or bankruptcy involving the partnership, individuals in a partnership, or other business entity or related business entity that comprises the D-B.

(b) The sale, merger or acquisition causing a negative change of 10% or more in net worth, a 10% shareholder equity or partnership change, that in any way involves or affects the entity providing goods or services in this RFQ/RFP.

(c) Inability to meet conditions of loan or debt covenants by the affected entity, a related business unit or parent corporation which will require a waiver or modification of agreed financial ratios.

(d) Coverage factors or other loan stipulations and additional credit support from shareholders or other third parties.

(4) If no material changes have occurred, provide a letter from the chief financial officer or treasure so certifying.

(5) Provide written statements from financial institutions of the D-B's ability to obtain a loan sufficient to complete the PROJECT and repay the loan prior to closing or otherwise obtain a release of lien.

(6) D-B must identify and explain any significant anticipated legal issues which the D-B must resolve in order to carry out the PROJECT and its obligations.

(7) Provide a list and brief description, including the resolution, of each arbitration, litigation or dispute proceedings during the last five years involving the D-B or any other organization that is under common ownership with the D-B.

(8) Describe any construction or renovation projects that resulted in assessment of liquidated damages or stipulated damages in excess of $25,000 during the last five (5) years. Describe the causes, time delays, and dollar amounts assessed. This includes all liquidated damages or stipulated damage assessments at any time during a project, not just final completion penalties. If such damages were assessed but through settlement or negotiations, were not paid, they need not be included. However, any unresolved instances of assessed liquidated or stipulated damages, currently subject to negotiations or challenge, should be included.

(9) The conceptual financing plan should include the scheduling milestones presented consistent with the Conceptual Project Development Plan. Describe key assumptions used in developing the conceptual financing plan.

B. Provide a conceptual financial plan based on the level of available project information, including proposed sources and uses of funds for the PROJECT.

C. The D-B certifies that the lead or managing entity is not currently delinquent in the payment of any taxes or certain debts owed in accordance with Texas Government Code, Section 2252.903, concerning contracting with persons who have debts or delinquencies.

D. The D-B certifies that none of its officers or principals is ineligible to receive a specified grant, loan, or payment and acknowledges that the DEA may be terminated and payment may be withheld if this certification is inaccurate.

E. The D-B certifies that none of its officers or principals owns delinquent child support payments as required by Texas Family Code §231.006 and that the Development and Exchange Agreement (DEA) may be rescinded or terminated and payment may be withheld if this certification is not accurate.

F. The D-B certifies that it will provide assurance of non-discrimination in the DEA as required by Title VI of the Civil Rights Act of 1964 and will abide by any other applicable federal requirements.

6. STATE OF TEXAS HUB SUBCONTRACTING PLAN *(MANDATORY)*

A. Historically Underutilized Business (HUB) Requirement – It is the policy of TxDOT as an agency of the State to promote and encourage contracting and subcontracting opportunities for Historically Underutilized Businesses (HUB) in all contracts, to create a level playing field of which HUBs can compete fairly, to ensure non–discrimination on the basis of race, color, national origin, or gender in the award and administration of contracts, to remove barriers to the participation of HUBs in contracts, and to assist in the development of firms that can compete successfully in the market place outside the HUB program. Consequently, the HUB requirements of TxDOT's HUB Program will apply to this PROJECT. The overall HUB goal for the PROJECT has been established at 15%. See **Attachment F** for HUB forms.

B. D-Bs must identify all their proposed HUB participants with the RFQ/RFP Submittal. To be deemed a qualified D-B, and to be considered, the D-B must include in the Proposal an expressed commitment to fulfill the HUB goal in their response should they be selected to receive the award.

C. For more details regarding HUB Program and requirements please visit the Texas Building and Procurement Commission website: www.tbpc.state.tx.us.

EVALUATION CRITERIA

The Proposal must include the following items to be evaluated based on the weighted percentage:

1. Letter of Interest
2. Conceptual Project Development Plan **(25%)**
3. Statement of Design Build Firm and Key Personnel Qualifications **(25%)**
4. Preliminary Project Cost Estimate **(30%)**
5. Financial Qualifications **(20%)**
6. State of Texas HUB Subcontracting Plan **(Mandatory)**

In evaluating the proposals submitted, TxDOT is particularly interested in those which reflect timely, functional and cost effective plans to accomplish the design and construction of the facility.

The successful proposal will be the one that provides the best value based on the preferred site location, site adaptation, design, desired project program/scope of work, best quality and quantity, and the shortest completion time, as well as exceptional qualifications, key personnel and best overall value.

TxDOT expects the RFQ/RFP Proposal to provide adequate information about the D-B organizational structure and all designated key personnel who will be involved in the PROJECT.

TxDOT reserves the right to request additional information as it deems necessary to assist in the evaluation of any proposal and to establish the responsibility, qualifications, and financial ability of the D-B, the proposed design professionals, subcontractors, suppliers and other individuals and entities to perform the work in accordance with RFQ/RFP. The three highest scored D-Bs will be interviewed. Participation in the interview phase is not assurance that any D-B will be awarded the DEA.

TxDOT will evaluate proposals based on the required criteria contained in the RFQ/RFP. TxDOT may discuss or negotiate all elements of the proposal with D-B.

After the submission of a proposal, and as part of such discussions or negotiations, TxDOT may permit the interviewed D-Bs to revise their respective proposal in order to obtain the best offer. TxDOT may not disclose any information derived from the proposals submitted from competing offers in conducting such discussions.

The selection of qualified D-Bs and ranking of the D-Bs will be determined by the following primary TxDOT personnel or other staff as assigned. TxDOT reserves the right to substitute a member of this evaluation team.

1. John Warrick, R.A. (Chairman)
   Maintenance Division – Facilities Management Section
   150 East Riverside Drive, Austin, Texas 78701

2. Karl Oberlander, Project Manager
   Maintenance Division – Facilities Management Section
   150 East Riverside Drive, Austin, Texas 78701

3. Michael Bassett, Director of Administration
   Waco District Headquarters
   100 South Loop Drive
   Waco, Texas 76704

The TxDOT evaluation team's key responsibility is to review each proposal, including all material submitted by the D-B and to determine the top three or four Proposals by ranking them in sequential order with the first-ranked being initially considered the best offer to the state. The TxDOT evaluation team will determine which of the top three or four ranked Proposals provides the best value to the department. The top three or four ranked D-Bs will be contacted in writing seven working days from the closing of the RFQ/RFP.

If the TxDOT evaluation team determines that it is unable to reach a satisfactory agreement with the "first-ranked" D-B, then it will terminate discussions and proceed to the next ranked in order of selection ranking until satisfactory terms for the DEA are achieved or all proposals have been rejected.

TXDOT will not disclose any information derived from the proposals before the TxDOT Commission awards a DEA. Proposers must clearly mark each page considered to contain information excepted from disclosure under the Public Information Act in order to assert any exception after the award is made.

Following the conclusion of successful negotiations, a recommendation for awarding the DEA will be placed on the agenda for the next regularly scheduled meeting of the TXDOT Commission.

PRE-SUBMITTAL CONFERENCE

There will be a **Pre-Submittal Conference** held on **Tuesday, September 5, 2006 at 9:00 A.M**., local time at the TXDOT Belton Maintenance Facility located at **1502 Old Holland Road, Bell County, Texas.** The conference agenda will include a presentation of the proposed PROJECT, a question and answer session, and guided tour of property proposed for exchange. Attendance at the Pre-Submittal Conference is optional.

The RFQ/RFP will also be published on the following website: http://www.dot.state.tx/MNT/contract/rfp.htm.and http://www.marketplace.state.tx.us. Interested parties are responsible for monitoring the website for information concerning the RFQ/RFP and any addenda that may be issued.

All questions about the meaning or intent of the Documents are to be directed to the address indicated in the RFQ/RFP.

1. Interpretations or clarifications considered necessary by TXDOT in response to such questions will be issued by Addenda faxed or mailed to all parties recorded by TXDOT as having received the Proposal Documents.
2. D-Bs may arrange for courier delivery at their own expense.
3. Questions received less than seven days prior to the date of opening proposals will not be answered.
4. Only questions answered by formal written Addenda will be binding. Oral and other interpretations or clarifications not issued in formal written Addenda will be without legal effect.
5. Addenda may also be issued to modify the Proposal Documents as deemed advisable by TXDOT.

Representatives of TXDOT will be present to discuss the PROJECT.

1. TXDOT will transmit to all prospective D-Bs of record such Addenda as TXDOT considers necessary in response to questions arising at the conference.
2. Oral statements made at briefings may not be relied upon and will not be binding or legally effective.

POINT OF CONTACT

TXDOT designates the following person, as its representative and Points of Contact for this RFP/RFQ. Design Build Firms and all interested parties in this PROJECT shall restrict all contact with other TXDOT staff and direct all questions regarding this RFQ to:

Michael Bassett, Director of Administration
Waco District Headquarters
100 S. Loop Dr., Waco, Texas 76704
Telephone: (254) 867-2700
E-mail: mbasset@dot.state.tx.us

Or

John Obr, Area Engineer
Bell County
1506 Old Holland Road, Belton, Texas 76513
Telephone: (254) 939-3778
E-mail: jobr@dot.state.tx.us

Copies of the proposal may be obtained from the TXDOT Waco District Headquarters Office.

TXDOT RESERVATION OF RIGHTS

In connection with the RFQ/RFP and PROJECT, TxDOT reserves all rights (which rights may be exercised by TxDOT in its sole discretion) available to it under the Transportation Code and other applicable law, including without limitation, and with or without cause and with or without notice, the right to:

A. Cancel this RFQ/RFP in whole or in part at any time prior to the execution of a contract by TxDOT, without incurring any cost obligations or liabilities.

B. Issue addenda, supplements, and modifications to this RFQ/RFP.

C. Revise and modify, at any time before the RFQ/RFP Due Date, the factors and/or weights of factors TxDOT will consider in evaluating RFQ/RFP submittals and to otherwise revise or expand its evaluation methodology as set forth herein.

D. Extend the RFQ/RFP submittal Due Date.

E. Investigate the qualifications of any D-B under consideration and require confirmation of information furnished by a D-B.

F. Require additional information from a D-B concerning contents of its RFQ/RFP submittal and/or require additional evidence of qualifications.

G. Waive or permit corrections to data submitted with any response to this RFQ/RFP until such time as TxDOT declares in writing that a particular stage or phase of its review of the responses has been completed or closed.

H. Reject any and all submittals, responses and RFQ/RFP submittals received at any time.

I. Terminate evaluations of responses received at any time.

J. Appoint evaluation committees to review RFQ/RFP submittals or response, make recommendations and to seek the assistance of outside technical experts and consultants in RFQ/RFP submittal evaluation.

K. Hold interviews and conduct discussions and correspondence with one or more of the D-Bs responding to this RFQ/RFP to seek an improved understanding and evaluation of the responses to this RFQ/RFP.

L. Seek or obtain data from any source that has the potential to improve the understanding and evaluation of the responses to this RFQ/RFP.

M. Disclose information contained in an RFQ/RFP submittal to the public as described herein, or referenced in this RFQ/RFP.

N. Authorize D-B teams to substitute firms and/or key personnel until such time as TXDOT declares in writing that a particular stage or phase of its review has been completed and closed.

O. Waive minor deficiencies in an RFQ/RFP submittal, accept and review a non-conforming RFQ/RFP submittal or seek clarifications or supplements to an RFQ/RFP submittal.

P. Disqualify any D-B which changes its RFQ/RFP submittal without TXDOT authorization.

Q. Exercise any other right reserved or afforded to TXDOT under this RFQ/RFP.

R. TXDOT reserves the right to modify the process in its sole discretion to address applicable law and/or the best interest of TXDOT and the State of Texas.

S. TXDOT shall not, under any circumstances, be bound by or liable for any obligations with respect to the PROJECT until such time (if at all) a DBE has been awarded and all approvals obtained in form and substance satisfactory to TXDOT have been executed and authorized by TXDOT.

LETTER OF INTEREST
RFQ/RFP No. CBC4704-00-668

DESIGN BUILD FIRM (D-B):_____ Response Date:_____

Texas Department of Transportation
Waco District Headquarters
100 South Loop Drive, Waco, Texas 76704

Attn: Michael Bassett:

The undersigned (**"Design-Build Firm"**) submits the following information (for this **"RFQ/RFP Submittal"**) in response to that certain Request for Qualifications and Proposal dated as of July 26, 2006 (and as amended by any **RFQ/RFP Addenda**), issued by the Texas Department of Transportation (**"TxDOT"**) for a real property exchange for capital improvements for Belton Area Engineer/Maintenance Facility (**"PROJECT"**)**.**

Enclosed, and by this reference incorporated herein and made a part of this RFQ/RFP, the following:

1. Letter of Interest
2. Conceptual Project Development Plan
3. Statement of Design Build Firm and Key Personnel Qualifications
4. Preliminary Project Cost Estimate
5. Financial Qualifications
6. State of Texas HUB Subcontracting Plan (Mandatory)

Design Build Firm (D-B) acknowledges receipt, understanding and full consideration of all materials posted on TXDOT's website http://www.dot.state.tx/MNT/contract/rfp.htm and http://www.marketplace.state.tx.us with respect to the PROJECT and any Addenda.

D-B understands that TXDOT is not bound by and may reject any and all RFQ/RFP submittals that TXDOT receives.

D-B further understands that all costs and expenses incurred by it in preparing this RFQ/RFP and participating in this process will be borne solely by the D-B, and that the RFQ/RFP submittal materials will become the property of TXDOT and will not be returned.

D-B agrees that TXDOT will not be responsible for any errors, omissions, inaccuracies or incomplete statements in this RFQ/RFP. D-B accepts all terms of the RFQ/RFP submittal process by signing this Letter of Interest and making the RFQ/RFP submittal.

This RFQ/RFP and subsequent award, if any, shall be governed by and construed in all respects according to the laws of the State of Texas. D-B agrees to venue in a court of competent jurisdiction in Travis County in the event litigation ensues between the D-B and TxDOT regarding any DEA that may be awarded pursuant to this RFQ/RFP.

Design Build Firm's Name

_____

Design Build Firm's primary business address:

_____

(No.) (Street) (Floor or Suite)

_____

(City) (State or Province) (ZIP or Postal Code) (Country)

_____

State or Country of Incorporation/Formation/Organization

Signature block for corporation or limited liability company:

By: _____

Print Name: _____

Title: _____

Signature block for partnership or joint venture:

By: _____

Print Name: _____

Title: _____

Add signatures of additional general partners or members as appropriate.

Signature block for partnership or joint venture:

By: _____

Print Name: _____

Title: _____

Signature block for attorney in fact:

By: _____

Print Name: _____

Attorney in Fact: _____

EXHIBIT A1
Belton Area Engineer/Maintenance Site

The Texas Department of Transportation (TxDOT) is the owner of certain property and improvements located at 1502 Old Holland Road, Belton, Bell County, Texas, more particularly described by metes and bounds as follows:

Being 10.00 acres in the M.F. CONNELL SURVEY, Abstract Number 6, situated in Belton, Bell County, Texas, and embracing all of the called 6.00 acre tract described in the deed to the State of Texas recorded in Volume 752, page 624 of the Bell County Deed Records, and all of the called 4.00 acre tract described in the deed to the State of Texas recorded in Volume 2448, page 704 of said Deed Records.

COMMENCING at a found ½ inch iron rod in the east side of way line of FM 436, and the east line of a 0.578 of an acre tract described in the deed to the State of Texas recorded in Volume 554, page 178 of said Deed Records, for the southwest corner of Lot 2, Block 1, of the J.C. WOOLEY ADDITION, an addition to the city of Belton, Bell County, Texas, as it appears upon the map recorded in Cabinet C, Slide 195-C of the Bell County Plat Records.

THENCE north 26°09'09" west 516.65 feet along the existing east ROW line of FM 436, also along the west line of Lots 1 and 2 of Block 1 of the J.C. WOOLEY ADDITION to a found ½ inch iron rod, replaced with a set 5/8 inch iron rod and a TxDOT aluminum cap in concrete, being on the south side of a concrete retaining wall being in the east line of FM 436 and a 0.578 acre tract, for the northwest corner of Lot 1, Block 1 of the J.C. WOOLEY ADDITION, also being the southwest corner of the called 6.00 acre tract for the Point of Beginning.

(1) THENCE north 26°09'09" west of 400-31/100 feet along the existing east ROW line of FM 436, along the west line of said 6.00 acre tract to a found 6 feet chain link fence corner post being in the east line of FM 436, also along the east line of said 0.578 acre tract, also being the southwest corner of Lot 1, Block F of the BELL TEX SUBDIVISION, being a REPLAT OF LOT 1, BLOCK F, AND LOT 1, BLOCK G, a subdivision in Belton, Bell County, Texas, as it appears upon the map recorded in Cabinet A, Slide 325-B of the Bell County Plat Records, also at the northwest corner of said 6.00 acre tract.

(2) THENCE north 63°50'51" east 653.49 feet along the north line of said 6.00 acre tract, also along the south line of Block F of the BELL TEX SUBDIVISION to a found PK nail in concrete at the base of a chain link fence corner post being the northeast corner of the called 6.00 acre tract, also being the northwest corner of Lot 10, Block E of the First RE-PLAT OF BLOCK E, BELL TEX SUBDIVISION as it appears upon the map recorded in Cabinet A, Slide 74-A of the Bell County Plat Records.

(3) THENCE south 26°07'16" east 399.96 feet along the east line of said 6.00 acre tract, also along the west line of Block E of the BELL TEX SUBDIVISION with a plastic cap stamped RCS-Temple, TX RPLS 2025 to a set 5/8 inch iron rod being the southeast corner of the called 6.00 acre tract, in the north line of the called 4.00 acre tract, and being the southwest corner of Lot 6, in said Block E of the BELL TEX SUBDIVISION.

(4) THENCE north 63°13’45” east 146.54 feet along the north line of said 4.00 acre tract, also along the south line of Lot 6, Block E of the BELL TEX SUBDIVISION to a found 5/8 inch iron rod being the northeast corner of the called 4.00 acre tract, the southeast corner of Lot 6, and the northwest corner of Lot 5, in said Block E of the BELL TEX SUBDIVISION.

(5) THENCE south 47°03’40” east 204.93 feet along the east line of said 4.00 acre tract, also along the west line of Lot 5, Block E of the BELL TEX SUBDIVISION to a found 5/8 inch iron rod with a TxDOT aluminum cap at the southeast corner of the called 4.00 acre tract, being the southwest corner of Lot 5, Block E of the BELL TEX SUBDIVISION, also being an angle point in the north line of Lot 10, Block 1 of JAS K. EVETTS ADDITION-SECTION 1, an addition in Belton, Bell County, Texas, as it appears upon the map recorded in Cabinet A, Slide 85-A of the Bell County Plat Records.

(6) THENCE south 43°15’36” west 587.59 feet along the south line of said 4.00 acre tract, also along the north line of Block 1 of the JAS K. EVETTS ADDITION-SECTION 1, to a found ½ inch iron rod in for the southwest corner of the called 4.00 acre tract, also being the north line of Block 1 of the JAS K. EVETTS ADDITION-SECTION 1, also being the southeast corner of Lot 2, Block 1 of the J.C. WOOLEY ADDITION.

(7) THENCE north 40°05’27” west 408.26 feet along the west line of said 4.00 acre tract, also along the east line of Lots 1 and 2, Block 1, of the J.C. WOOLEY ADDITION to a found ½ inch rod being the northwest corner of the called 4.00 acre tract, in the south line of the called 6.00 acre tract, and being the northeast corner of Lot 1, Block 1 of the J.C. WOOLEY ADDITION.

(8) THENCE south 63°49’00” west 224.53 feet along the south line of the called 6.00 acres tract, and the north line of Lot 1, Block 1 of the J.C. WOOLEY ADDITION, to the POINT OF BEGINNING and containing 10.00 acres.

Basis of bearings were taken from the east line of FM 436 adjacent to the J.C. WOOLEY ADDITION and the State of Texas called 6.00 acre tract as north 26 degrees-09 minutes-09 seconds west.

Exhibit A2
Killeen Maintenance Site

The Texas Department of Transportation (TxDOT) is the owner of certain property and improvements located at 2102 Martin Luther King Blvd., Killeen, Bell County, Texas, more particularly described by metes and bounds as follows:

BEING 7.899 acres of land, surveyed by Landesign Services, Inc., out of the James C. McKee Survey, abstract no. 992, in Bell County, Texas, and being a part of a called 7.94 acre tract of land described in deed to the State of Texas recorded in Volume 1293, page 33 of the deed records of Bell County, Texas (D.R.B.C.T.); and being more particularly described by metes and bounds as follows:

COMMENCING at a found Type I in the existing east ROW line of FM 2410, being the east line of a called 0.191 acre tract of land described in deed to the State at Texas for ROW recorded in Volume 2378, page 606 of the D.R.B.C.T., and the west line of the remainder of a called 176.07 acre tract of land described in deed to Central Texas Union Junior College District recorded in Volume 1779, page 876 of the D.R.B.C.T.;

THENCE South 21°35'07" West 204.89 feet with the existing east ROW line of FM 2410 to a found Type I monument at the southeast corner of said 0.191 acre ROW tract in the south line of the J. J. Roberts Survey, abstract no. 731, the north line of the James C. McKee Survey, and the north line of said 7.94 acres for the **POINT OF BEGINNING**, from which a calculated point for the northwest corner of said 7.94 acres and the southwest corner of said 0.191 acres bears North 73°00'00" West 10.96 feet;

(1) THENCE South 73°00'00" East 689.84 feet with the south line of the J. J. Roberts Survey, the north line of the James C. McKee Survey, and the north line of said 7.94 acres to a found 5/8" iron rod with a TxDOT aluminum cap at the northeast corner of said 7.94 acres;

(2) THENCE South 17°00'00" West 700.00 feet with the east line of said 7.94 acres to a found 5/8 inch iron rod with a TxDOT aluminum cap at the southeast corner of said 7.94 acres;

(3) THENCE North 73°00'00" West 400.00 feet with the south line of said 7.94 acres to a found 5/8 inch iron rod with a TxDOT aluminum cap at the southernmost southwest corner of said 7.94 acres;

(4) THENCE North 17°00'00" East 482.62 feet with the west line of said 7.94 acres to a found 5/8 inch iron rod with a TxDOT aluminum cap at an angle point in the west line of said 7.94 acres;

(5) THENCE North 72°54'10" West 300.59 feet with the west line of said 7.94 acres to a found Type I monument in the existing east ROW line of FM 2410 being the northeast corner of a called 1.887 acre tract of land described in deed to the State of Texas for ROW recorded in Volume 2378, page 606 of the D.R.B.C.T., from which a calculated point for the westernmost southwest corner of said 7.94 acres bears North 72°54'10" West 18.74 feet;

(6) THENCE North 19°50'23" East 217.13 feet through said 7.94 acres to the POINT OF BEGINNING.

This parcel contains 7.899 acres of land, more or less, out of the James C. McKee Survey, abstract no. 992, in Bell County, Texas.

Exhibit A3
Temple Maintenance Site

The Texas Department of Transportation (TxDOT) is the owner of certain property and improvements located at 3801 North 3rd., Temple, Bell County, Texas, more particularly described by metes and bounds as follows:

BEING 5.997 acres of land, surveyed by Landesign Services, Inc., out of the Uri Holbrook Survey, abstract no. 1009, Bell County, Texas, and being a part of Tract 6 of the subdivision of Matt Bosl 84 acre tract, recorded in Volume 621, page 511 of the Deed Records of Bell County, Texas and all of a called 6.000 acre tract described in deed to the State of Texas recorded in Volume 771, page 368 of the deed records of Bell County, Texas; and being more particularly described by metes and bounds as follows:

COMMENCING at a found ½ inch iron rod in the east ROW line of I 35, the east line of a called 4.288 acre tract of land described in deed to the State of Texas for ROW recorded in Volume 421, page 271 of the Deed Records of Bell County, Texas and in the west line of Tract 7 of the Subdivision of Matt Bosl 84 acre tract and for the southern most westerly corner of a called 8.042 acre tract of land described in deed to ONCOR ELECTRIC DELIVERY COMPANY, recorded in Volume 4882, page 226 of the Deed Records of Bell County, Texas;

THENCE North 15°59'20" East 156.05 feet (record: North 17°59'35" East 156.04 feet), with the east line of east ROW line of I 35, the east line of said 4.288 acres and the west line of said 8.042 acres, passing a Type II ROW monument at 155.15 feet, to a calculated point for the northeast corner of Tract 7 and said 8.039 acres, the southwest corner of Tract 6 and said 6.000 acres and the POINT OF BEGINNING, from which a found ½ inch iron rod bears North 72°53'48" West 0.30 feet;

(1) THENCE North 15°59'20" East 250.00 feet (record North 17°57' East 250.00 feet) with the east ROW line of I 35, the east line of said 4.288 acres and the west line of Tract 6 and said 6.000 acres to a found 5/8 inch iron rod with a TxDOT aluminum cap for the northwest corner of said 6.000 acres and the western most southerly corner of a called 4.89 acre tract of land described in deed to County Developers, Inc., recorded in Volume 1006, page 680 of the Deed Records of Bell County, Texas, from which a found Type II ROW monument bears North 15°59'20" East 1.38 feet;

(2) THENCE South 72°53'48" East 1045.17 feet (record: South 70°59'30" East 1045.62 feet) through Tract 6 along the north line of said 6.000 acres and the south line of said 4.89 acres to a found 5/8 inch iron rod with a TxDOT aluminum cap for the northeast corner of said 6.000 acres and an angle corner in the south line of said 4.89 acres, from which a 3 inch galvanized fence corner post bears, South 72°43' West 1.0 feet;

(3) THENCE South 16°02'42" West 250.00 feet (record: South 17°57' West 250.00 feet) continuing through Tract 6 along the east line of said 6.000 acres and the south line of said 4.89 acres to a found 5/8 inch iron rod with a TxDOT aluminum cap in the north line of said 8.042 acres for the southeast corner of said 6.000 acres and an angle corner in the south line of said 4.89 acres from which a found 1/2 inch iron rod for the southeast corner of Tract 6 and said 4.89 acres and the northeast corner of Tract 7 and said 8.039

acres bears South 72°53'48" East 54.50 feet;

(4) THENCE North 72°53'48" West 1044.92 feet (record North 70°59'30" West 1045.62 feet) along the south line of Tract 6 and said 6.000 acres and the north line of Tract 7 and said 8.042 acres to the POINT OF BEGINNING.

Exhibit B
New Location

The Texas Department of Transportation (TxDOT) is the owner of certain property located at the northeast corner of Loop 121 and Connell Street, Belton, Bell County, Texas being more particularly described by metes and bounds as follows:

BEING a tract of land situated in the James P. Wallace Survey, abstract no. 906, Bell County, Texas, and being a portion of that tract as described in a deed to Bill Bartlett, Trustee, recorded in Volume 3606, page 352, Deed Records, Bell County, Texas; said tract being more particularly described by metes and bounds as follows:

COMMENCING at a ½ inch steel rod found (control monument) being the Northwest corner of said Bartlett tract and the Northwest corner of Lot 1, Block 1, Church Place Addition, an addition to the city of Belton, Bell County, Texas, per plat recorded in Cabinet C, Slide 203-C in said deed records, and being the Southwest corner of a tract of land described in a deed to J.N. Woody, recorded in Volume 695, page 255, D.R.B.C.T.;

THENCE South 71°17'51" East (reference bearing) along the North line of said Bartlett tract and the North line of said Lot 1, Block 1, Church Place Addition and the South line of the said Woody tract passing at 435.70 feet the Northeast corner of said Lot 1, Block 1, Church Place Addition, continuing in all a distance of 1121.13 feet to a 5/8 inch steel rod (control monument) being the common Northeast corner of said Bartlett tract and the Northwest corner of a tract of land described in a deed to Jake Petronelli and wife Pauline Petronelli, recorded in Volume 656, page 215, of said deed records and being the POINT OF BEGINNING;

(1) South 20°43'12" West along the common East line of said Bartlett tract and West line of said Petronelli tract a distance of 375.00 feet to a ½ inch steel rod being the Southwest corner of said Petronelli tract;

(2) South 71°09'00" East along the common South line of said Petronelli tract and a Northerly line of said Bartlett tract a distance of 121.44 feet to a ½ inch steel rod being the Northwest corner of a tract of land described in a deed to Tommie Humphrey and wife, Ruby Humphrey recorded in Volume 2296, page 607 in said deed records and from which a 60D nail bears North 42 °56'00" East a distance of 3.0 feet;

(3) South 20°39'28" West along the East line of said Bartlett tract, at 313.0 feet passing a 3/4 inch steel pipe that lies 0.3 feet Northwest of line, in all a distance of 412.64 feet to ½ inch steel rod being the Southwest corner of a tract of land described in a deed to Dan Decker recorded in Volume 1703, page 743, in said deed records;

(4) South 71°09'00" East along the common South line of said Decker tract and the most Easterly North line of said Bartlett tract, a distance of 208.50 feet to a ½ inch steel rod on the West ROW. line of Connell Street, from which a 60D nail bears North 72°34'57" West a distance of 2.1 feet;

(5) South 20°45'32" West along said West ROW, a distance of 657.92 feet to a 4 inch square concrete ROW. marker;

(6) South 65°40'09" West (called 65° 40' 00") departing said ROW. a distance of 72.05 feet to a 5/8 inch Huitt-Zollars capped steel rod on the North ROW. line of Loop 121 (a

publicly maintained road);

(7) North 71°09’15” West along the common said Loop 121 ROW, and South line of said Bartlett tract a distance of 648.98 feet to a 5/8 inch Huitt-Zollars capped steel rod, from which a ½ inch steel rod found bears North 71°09’15” West, a distance of 707.06 feet;

(8) North 18°51’20” East 266.78 feet from and parallel to the Easterly line of said Lot 1, Block 1, Church Place Addition, a distance of 1493.07 feet to a 5/8 inch Huitt-Zollars capped steel rod on the North line of said Bartlett tract;

(9) South 71°17’51” East (reference bearing) along the common North line of said Bartlett tract and South line of said Woody tract, a distance of 418.61 feet to the POINT OF BEGINNING and embracing 871,197 square feet or 20.000 acres of land.

ATTACHMENT A1
Appraisal Information

TxDOT is the owner of certain property and improvements proposed for exchange located at 1502 Old Holland Road, Belton, Bell County, Texas.

Date of Inspection:	May 4, 2006
Property Rights:	Fee Simple
Land Area:	10.00 acres
Frontage/Access:	400 feet on Holland Road (FM 436)
Shape:	Irregular
Zoning:	S-4 Specific Use Permit.
Utilities:	All utilities available; water, sewer, electricity and natural gas.
Floodplain: None	Zone X – non of the site within flood plain
Highest and Best Use:	Commercial or Light Industrial
Removal of Existing:	The vertical asphalt storage tanks will be removed by TxDOT.
Traffic Pattern:	Old Holland road (FM 436) is a two way, four lane highway
Restrictions/Reservation:	None known
Topography:	Basically level
Easements:	No known adverse easements or encumbrances
Reversions:	None
Encroachments:	No known adverse easements or encumbrances
Environmental Hazards:	No known hazards.
Endangered Species:	None
Neighborhood:	Commercial developments to the south, residential to the east and north.
Estimated Value of Improvements:	$381,914
Land Value Estimates:	$100,000
Estimate Value of Property:	$481,914

ATTACHMENT A2
Appraisal Information

TxDOT is the owner of certain property and improvements proposed for exchange located in Killeen, Bell County, Texas.

Date of Inspection:	May 19,2006
Property Rights:	Fee Simple
Land Area:	7.899 acres
Frontage/Access:	217.13 feet along the easterly side of Martin Luther King Boulevard
Shape:	Irregular
Zoning:	M-1 permits uses in the B-5 district plus manufacturing uses r
Utilities:	All utilities including water, sewer, electricity and natural gas.
Floodplain: None	C – No adverse effect
Highest and Best Use:	Commercial office/warehouse, light Industrial or retail sales/services.
Removal of Existing:	The vertical asphalt storage tanks will be removed by TxDOT.
Traffic Pattern:	Martin Luther King Boulvedard easterly and westerly
Restrictions/Reservation:	None
Topography:	Front portion slightly above grade but have adequate drainage
Easements:	None
Reversions:	None
Encroachments:	None
Environmental Hazards:	No known hazards.
Endangered Species:	None
Neighborhood:	Commercial developments to the south and residential to the east and north.

Estimated Value of Improvements:	$147,000
Land Value Estimates:	$688,000
Estimate Value of Property:	$835,000

ATTACHMENT A3
Appraisal Information

TxDOT is the owner of certain property and improvements proposed for exchange located at 3801 North 3rd Street, Temple, Bell County, Texas.

Date of Inspection:	May 3, 2006
Property Rights:	Fee Simple
Land Area:	5.997 acres
Frontage/Access:	250 feet along the easterly side of the frontage road of IH-35
Shape:	Rectangular
Zoning:	Front Portion Zoned G-R General Retail, office and retail sales/service. Rear 2F or commercial, light industrial or retail.
Utilities:	Available; water,electricity and natural gas. Sewer is septic.
Floodplain:	None
Highest and Best Use:	Retail sales/service, storage or light industrial.
Removal of Existing:	Any portable equipment including asphalt storage tanks will be removed by TxDOT.
Traffic Pattern:	North bound IH35 egress ramp south of property, South bound IH 35 must exist North 3rd Street and loop around on city streets.
Restrictions/Reservation:	None known.
Topography:	Sloping. Adequate drainage.
Easements:	No known adverse easements or encumbrances
Reversions:	None
Encroachments:	No known adverse easements or encumbrances
Environmental Hazards:	No known hazards.
Endangered Species:	None
Neighborhood:	Predominant development is warehouse with limited on-site traffic.

Estimated Value of Improvements:	$180,100
Land Value Estimates:	$104,900
Estimate Value of Property:	$285,000

ATTACHMENT B1

TxDOT is the owner of certain property and improvements proposed for exchanged located at 1502 Holland Road, Belton , Texas.

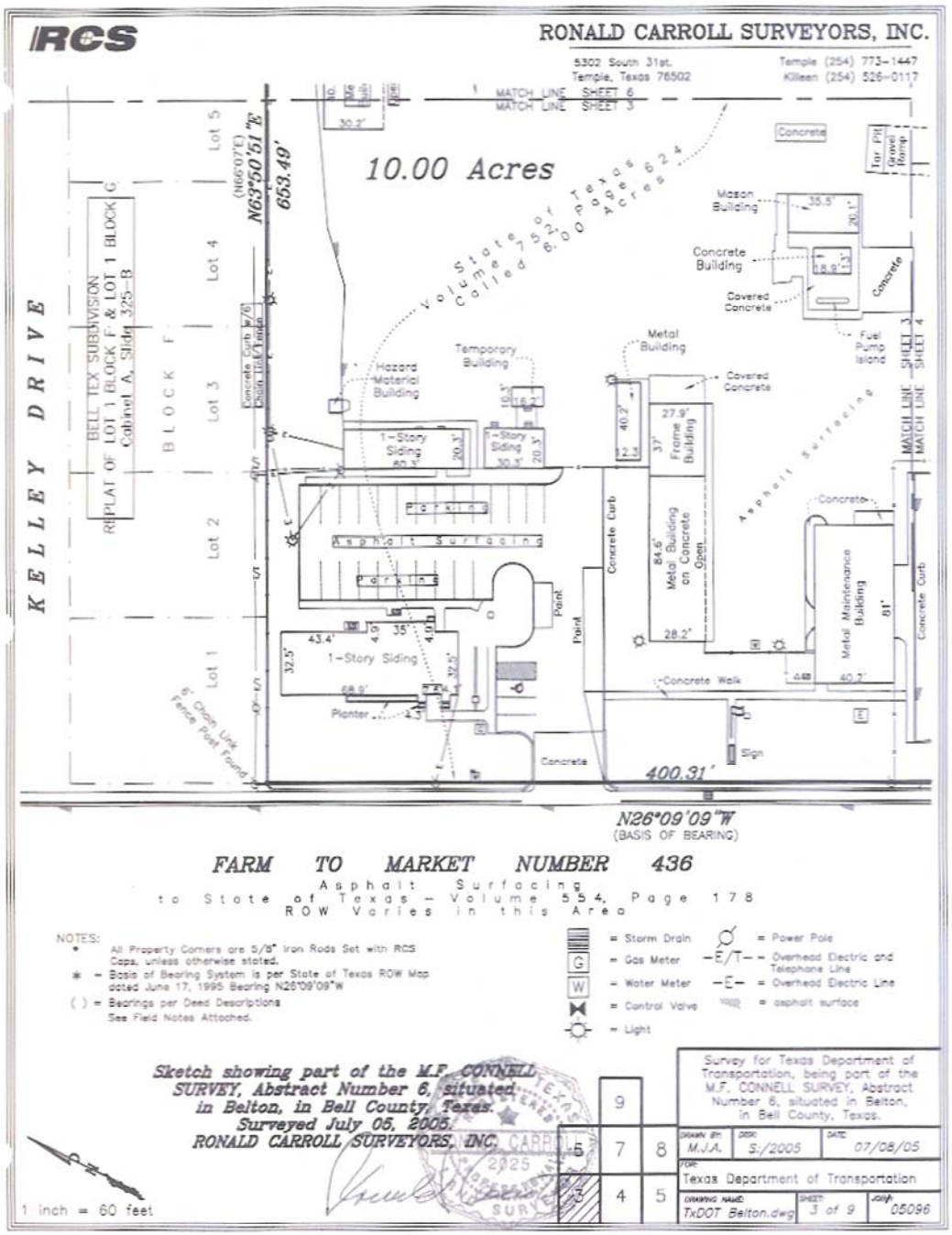

7

ATTACHMENT B2

TxDOT is the owner of certain property and improvements proposed for exchanged located at2102 Martin Luther King Blvd.,Killeen, Texas.

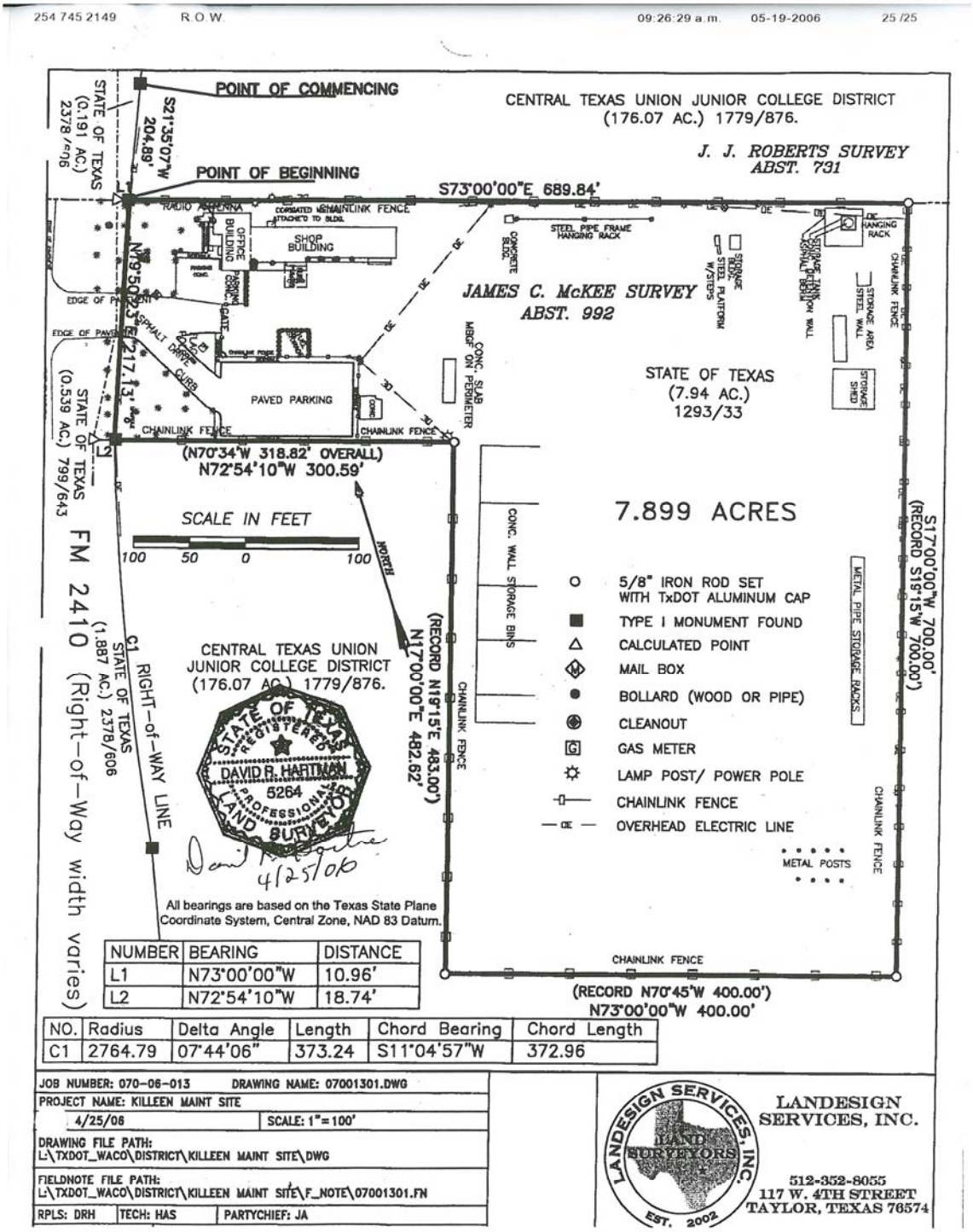

NUMBER	BEARING	DISTANCE
L1	N73°00'00"W	10.96'
L2	N72°54'10"W	18.74'

NO.	Radius	Delta Angle	Length	Chord Bearing	Chord Length
C1	2764.79	07°44'06"	373.24	S11°04'57"W	372.96

ATTACHMENT B3
Survey

TxDOT is the owner of certain property and improvements proposed for exchanged located at 3801 North 3rd Street, Temple,Texas.

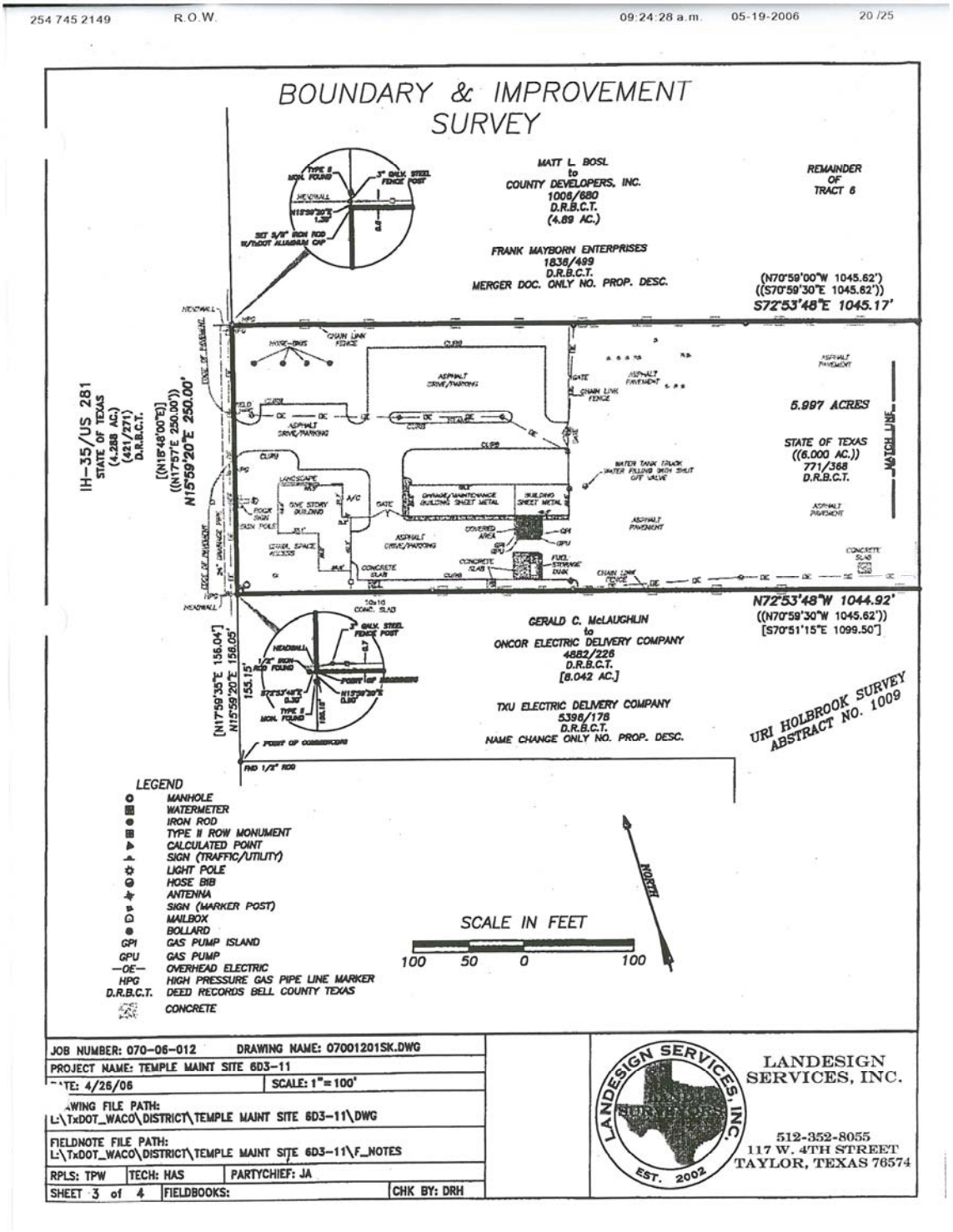

ATTACHMENT C1
Phase I Environmental Assessment

The following information is based on a Phase I Environmental Site Assessment Report prepared, on the property and improvements located at 1506 and 1502 Holland Road, City of Belton, Bell County, Texas, in May 2006, by LCA Environmental, Inc. LCA Environmental, Inc. performed a Phase I ESA in general conformance with the scope and limitations of *ASTM 1527-05* of the Bell County Maintenance and Engineering (the Project Site), 10.0 acres of developed land located Any exceptions to, or deletions from, this practice are described in Section 1.0 of this report.

The complete report is available by writing or contacting the District Point of Contact listed on page 25 or as assigned (Ref. Texas Open Records Act).

FINDINGS AND CONCLUSIONS
The following is a summary of the key findings and conclusions regarding the Belton property:

7.1. Findings
LCA has included its opinions of the potential impact on the Project Site of conditions and/or information identified during the course of the assessment. These opinions are found throughout the report in the various sections where the respective conditions and/or information are first presented. A summary of LCA's findings follows:

7.1. **Known or suspect recognized environmental conditions:**

Based on the work performed by LCA, this assessment has revealed no evidence of recognized environmental conditions (RECs) in connection with the Project Site.

7.1.1. **Historical recognized environmental conditions:**

None observed for the Project Site at this time.

7.1.2. ***De minimis* conditions:**

- Surface staining in the vehicle maintenance pit of the Wash and Grease Building
- Surface staining was apparent within the two berms surrounding the asphalt emulsion tanks that appears to result from the transferring of product from the ASTs to the trucks
- Surface staining surrounding the air compressor located in the northeast corner of the Service Station

7.2. On-Site Recognized Environmental Conditions
This assessment has revealed no evidence of recognized environmental conditions in connection with the Project Site.

7.3. Environmental Professional Statement
I declare that, to the best of my professional knowledge and belief, I meet the definition of Environmental Professional as defined in 312.10 of 40 CFR 312.

I have the specific qualifications based on education, training, and experience to assess a property of the nature, history, and setting of the Project Site. LCA Environmental, Inc. has developed and performed all appropriate inquiries in conformance with the standards and practices set forth in 40 CFR Part 312.

ATTACHMENT C2
Phase I Environmental Assessment

The following information is based on a Phase I Environmental Site Assessment Report prepared, on the property and improvements located at 12102 Martin Luther King Boulevard, City of Killeen, Bell County, Texas., in May 2006. LCA Environmental, Inc. performed a Phase I ESA in general conformance with the scope and limitations of *ASTM 1527-05* of the Killeen Maintenance facility (the Project Site), 7.899 acres of developed land located at 2102 Martin Luther King Boulevard, Killeen, Bell County, Texas. Any exceptions to, or deletions from, this practice are described in Section 1.0 of this report.

The complete report is available by writing or contacting Michael Bassett or the Point of Contact listed on page 25 or as assigned (Ref. Texas Open Records Act).

FINDINGS AND CONCLUSIONS
The following is a summary of the key findings and conclusions regarding the Belton property:

7.1. Findings
LCA has included its opinions of the potential impact on the Project Site of conditions and/or information identified during the course of the assessment. These opinions are found throughout the report in the various sections where the respective conditions and/or information are first presented.

A summary of LCA's findings follows:

7.2. 1. **Known or suspect recognized environmental conditions:**

Based on the work performed by LCA, this assessment has revealed no evidence of recognized environmental conditions (RECs) in connection with the Project Site.

7.1.3. **Historical recognized environmental conditions:**

None observed for the Project Site at this time.

7.1.4. ***De minimis* conditions:**

- Surface staining surrounding automotive fluid containers in the maintenance area
- Surface staining within the concrete and asphalt berms of the asphalt emulsion tank area

7.2. On-Site Recognized Environmental Conditions

This assessment has revealed no evidence of recognized environmental conditions in connection with the Project Site.

7.3. Environmental Professional Statement

I declare that, to the best of my professional knowledge and belief, I meet the definition of Environmental Professional as defined in 312.10 of 40 CFR 312.

I have the specific qualifications based on education, training, and experience to assess a property of the nature, history, and setting of the Project Site. LCA Environmental, Inc. has developed and performed all appropriate inquiries in conformance with the standards and practices set forth in 40 CFR Part 312.

ATTACHMENT C3
Phase I Environmental Assessment

The following information is based on a Phase I Environmental Site Assessment Report prepared, on the property and improvements located at 3801 North 3rd Street, City of Temple, Bell County, Texas. in May 2006, by LCA Environmental, Inc.. LCA Environmental, Inc. performed a Phase I ESA in general conformance with the scope and limitations of *ASTM 1527-05* of the Temple Signal Office facilities (the Project Site), 5.997 acres of developed land. Any exceptions to, or deletions from, this practice are described in Section 1.0 of this report.

The complete report is available by writing or contacting the District Point of Contact listed on page 25 or as assigned (Ref. Texas Open Records Act).

FINDINGS AND CONCLUSIONS
The following is a summary of the key findings and conclusions regarding the Temple pro property:

7.1. Findings
LCA has included its opinions of the potential impact on the Project Site of conditions and/or information identified during the course of the assessment. These opinions are found throughout the report in the various sections where the respective conditions and/or information are first presented.

7.3. Known or suspect recognized environmental conditions:

Based on the work performed by LCA, this assessment has revealed no evidence of recognized environmental conditions (RECs) in connection with the Project Site.

7.1.5. Historical recognized environmental conditions:

None observed for the Project Site at this time.

7.1.6. *De minimis* conditions:

- Surface staining in the vehicle maintenance pit of the Wash and Grease Building and in the vicinity of the metal containers
- Unknown amount of contents within two metal containers labeled “Hyd. Oil” and “Hyd. Trac. Oil” located within the Wash and Grease Building
- Surface staining surrounding the air compressor in the Wash and Grease Building

7.2. On-Site Recognized Environmental Conditions

This assessment has revealed no evidence of recognized environmental conditions in connection with the Project Site.

7.3. Environmental Professional Statement

I declare that, to the best of my professional knowledge and belief, I meet the definition of Environmental Professional as defined in 312.10 of 40 CFR 312.

I have the specific qualifications based on education, training, and experience to assess a property of the nature, history, and setting of the Project Site. LCA Environmental, Inc. has developed and performed all appropriate inquiries in conformance with the standards and practices set forth in 40 CFR Part 312.

ATTACHMENT D
Utility and Topographic Site Survey – New Site (Vacant)

THIS PAGE LEFT BLANK INTENTIONALLY

COMPLETE CIVIL ENGINEERING DESIGN INCLUDED IN ATTACHMENT M

ATTACHMENT E
GEOTECHNICAL REPORT (SOILS ANALYSIS) NEW SITE

THIS PAGE LEFT BLANK INTENTIONALLY

IMPORTANT NOTE
TO BE ISSUED BY ADDENDUM

ATTACHMENT E
Geotechnical Report (Soils Analysis) – New Site (Vacant)

THIS PAGE LEFT BLANK INTENTIONALLY

ADDENDUM TO BE ISSUED AT A LATER DATE

ATTACHMENT F

HUB SUBCONTRACTING PLAN (HSP)

In accordance with Gov't Code §2161.252, the contracting agency has determined that subcontracting opportunities are probable under this contract. Therefore, respondents, including State of Texas certified Historically Underutilized Businesses (HUBs), must complete and submit a State of Texas HUB Subcontracting Plan (HSP) with their solicitation response.

NOTE: Responses that do not include a completed HSP shall be rejected pursuant to Gov't Code §2161.252(b).

The HUB Program promotes equal business opportunities for economically disadvantaged persons to contract with the State of Texas in accordance with the goals specified in the State of Texas Disparity Study. The HUB goals defined in 1 TAC §111.13 are: ***11.9 percent for heavy construction other than building contracts, 26.1 percent for all building construction, including general contractors and operative builders contracts, 57.2 percent for all special trade construction contracts, 20 percent for professional services contracts, 33 percent for all other services contracts, and 12.6 percent for commodities contracts.***

- - Agency Special Instructions/Additional Requirements - -

Search the State of Texas HUB Database for HUB vendors by class and Item numbers at the following link: http://www.tbpc.state.tx.us/cmbl/cmblhub.html. If it is determined that a Vendor listed in the HUB Subcontracting Plan is not a certified State of Texas HUB Vendor, your response shall be rejected as a material failure to comply with the advertised specifications. Submit HUB certification verification documentation, Good Faith Effort Documentation, Self Performance Justification and any other supporting documents with your bid response, offer or proposal.

The Department will request an apparent low bidder to provide additional documentation to substantiate the information contained in the HUB Subcontracting Plan after the bid opening and prior to contract award. Failure to provide the additional supporting information meeting the requirements of the Department WITHIN THREE BUSINESS DAYS of the request will result in the bid being declared non-responsive. The Department may proceed with consideration of the remaining bidders in determining the apparent lowest bidder.

SECTION 1 - RESPONDENT AND SOLICITATION INFORMATION

a. Respondent (Company) Name: _____ State of Texas VID #: _____

Point of Contact: _____ Phone #: _____

b. Is your company a State of Texas certified HUB? ☐ - Yes ☐ - No

c. Solicitation #: _____

SECTION 2 - SUBCONTRACTING INTENTIONS

After having divided the contract work into reasonable lots or portions to the extent consistent with prudent industry practices, the respondent must determine what portion(s) of work, including goods or services, will be subcontracted. Note: In accordance with 1 TAC §111.12., a "Subcontractor" means a person who contracts with a vendor to work, to supply commodities, or contribute toward completing work for a governmental entity. Check the appropriate box that identifies your subcontracting intentions:

☐ - **Yes, I will be subcontracting portion(s) of the contract.**
(If Yes, in the spaces provided below, list the portions of work you will be subcontracting, and go to page 2.)

☐ - **No, I will not be subcontracting any portion of the contract, and will be fulfilling the entire contract with my own resources.**
(If No, complete SECTION 9 and 10.)

Line Item # - Subcontracting Opportunity Description	Line Item # - Subcontracting Opportunity Description
(#1) -	(#11) -
(#2) -	(#12) -
(#3) -	(#13) -
(#4) -	(#14) -
(#5) -	(#15) -
(#6) -	(#16) -
(#7) -	(#17) -
(#8) -	(#18) -
(#9) -	(#19) -
(#10) -	(#20) -

*If you have more than twenty subcontracting opportunities, a continuation page is available at *http://www.tbpc.state.tx.us/hub/forms/index.html.*

Page 1

HSP Rev.9/05

Enter your company's name here: _____ Solicitation #: _____

IMPORTANT: You must complete a copy of this page for each of the subcontracting opportunities you listed in SECTION 2. You may photocopy this page or download copies at http:www.tbpc.state.tx.us.hubforms/index.html.

SECTION 3 - SUBCONTRACTING OPPORTUNITY

Enter the line item number and description of the subcontracting opportunity you listed in SECTION 2.

Line Item # _____ **Description:** _____

SECTION 4 - MENTOR-PROTÉGÉ PROGRAM

If respondent is participating as a Mentor in a State of Texas Mentor Protégé Program, submitting their Protégé (Protégé must be a State of Texas certified HUB) as a subcontractor to perform the portion of work (subcontracting opportunity) listed in SECTION 3, constitutes a good faith effort towards that specific portion of work. Will you be subcontracting the portion of work listed in SECTION 3 to your Protégé?

☐ **- Yes (If Yes, complete SECTION 8 and 10.)** ☐ **- No / Not Applicable (If No or Not Applicable, go to SECTION 5.)**

SECTION 5 - PROFESSIONAL SERVICES CONTRACTS ONLY

This section applies to Professional Services Contracts only. All other contracts go to SECTION 6.

Does your HSP contain subcontracting of 20% or more with HUB(s)?

☐ **- Yes (If Yes, complete SECTION 8 and 10.)** ☐ **- No / Not Applicable (If No or Not Applicable, go to SECTION 6.)**

In accordance with Gov't Code §2254.004, "Professional Services" means services: (A) within the scope of the practice, as defined by state law of accounting; architecture; landscape architecture; land surveying; medicine; optometry; professional engineering; real estate appraising; or professional nursing; or (B) provided in connection with the professional employment or practice of a person who is licensed or registered as a certified public accountant; an architect; a landscape architect; a land surveyor; a physician, including a surgeon; an optometrist; a professional engineer; a state certified or state licensed real estate appraiser; or a registered nurse.

SECTION 6 - NOTIFICATION OF SUBCONTRACTING OPPORTUNITY

Complying with a, b and c of this section constitutes Good Faith Effort towards the portion of work listed in SECTION 3. After performing the requirements of this section, complete SECTION 7, 8 and 10.

a. Provide written notification of the subcontracting opportunity listed in SECTION 3 to **three (3)** or more HUBs. Use the State of Texas' Centralized Master Bidders List (CMBL), found at ***http://www.tbpc.state.tx.us/cmbl/cmblhub.htm,*** and its HUB Directory, found at ***http://www.tbpc.state.tx.us/cmbl/hubonly.html,*** to identify available HUBs. **Note: Attach supporting documentation (letters, phone logs, fax transmittals, electronic mail, etc.) demonstrating evidence of the good faith effort performed.**

b. Provide written notification of the subcontracting opportunity listed in SECTION 3 to a minority or women trade organization or development center to assist in identifying potential HUBs by disseminating the subcontracting opportunity to their members/participants. A list of trade organizations and development centers may be accessed at ***http://www.tbpc.state.tx.us/hub/minoritywomenbuslinks.htm.*** **Note: Attach supporting documentation (letters, phone logs, fax transmittals, electronic mail, etc.) demonstrating evidence of the good faith effort performed.**

c. Written notifications should include the scope of the work, information regarding the location to review plans and specifications, bonding and insurance requirements, required qualifications, and identify a contact person. Unless the contracting agency has specified a different time period, you must allow the HUBs no less than five (5) working days from their receipt of notice to respond, **and** provide notice of your subcontracting opportunity to a minority or women trade organization or development center no less than five (5) working days prior to the submission of your response to the contracting agency.

SECTION 7 - HUB FIRMS CONTACTED FOR SUBCONTRACTING OPPORTUNITY

List **three (3)** State of Texas certified HUBs you notified regarding the portion of work (subcontracting opportunity) listed in SECTION 3. Specify the vendor ID number, date you provided notice, and if you received a response. **Note: Attach supporting documentation (letters, phone logs, fax transmittals, electronic mail, etc.) demonstrating evidence of the good faith effort performed.**

Company Name	VID #	Notice Date (mm/dd/yyyy)	Was Response Received?
		/ /	☐ - Yes ☐ - No
		/ /	☐ - Yes ☐ - No
		/ /	☐ - Yes ☐ - No

SECTION 8 - SUBCONTRACTOR SELECTION

List the subcontractor(s) you selected to perform the portion of work (subcontracting opportunity) listed in SECTION 3. Also, specify the expected percentage of work to be subcontracted, the approximate dollar value of the work to be subcontracted, and indicate if the company is a Texas certified HUB.

Company Name	VID #	Expected % of Contract	Approximate Dollar Amount	Texas Certified HUB?
		%	$	☐ - Yes ☐ - No*
		%	$	☐ - Yes ☐ - No*

***If the subcontractor(s) you selected is not a Texas certified HUB, provide written justification of your selection process below:**

_____

_____

Page 2

Enter your company's name here: _____ Solicitation #: _____

SECTION 9 - SELF PERFORMANCE JUSTIFICATION

(If you responded "No" to SECTION 2, you must complete SECTION 9 and 10.)

Does your response/proposal contain an explanation demonstrating how your company will fulfill the entire contract with its own resources?

☐ - **Yes** If Yes, in the space provided below, list the specific page/section of your proposal which identifies how your company will perform the entire contract with its own equipment, supplies, materials and/or employees.

☐ - **No** If No, in the space provided below, explain how your company will perform the entire contract with its own equipment, supplies, materials, and/or employees.

_____

_____

_____

_____

_____

_____

_____

_____

_____

_____

_____

_____

_____

_____

_____

_____

SECTION 10 - AFFIRMATION

As evidenced by my signature below, I affirm that I am an authorized representative of the respondent listed in SECTION 1, and that the information and supporting documentation submitted with the HSP are true and correct. Respondent understands and agrees that, if awarded any portion of the solicitation:

- The respondent must submit monthly compliance reports (Prime Contractor Progress Assessment Report – PAR) to the contracting agency, verifying their compliance with the HSP, including the use/expenditures they have made to subcontractors. (The PAR is available at http://www.tbpc.state.tx.us/hubbid/forms/index.html).
- The respondent must seek approval from the contracting agency prior to making any modifications to their HSP. If the HSP is modified without the contracting agency's prior approval, respondent may be subject to debarment pursuant to Gov't Code §2161.253(d).
- The respondent must, upon request, allow the contracting agency to perform on-site reviews of the company's headquarters and/or work-site where services are to be performed and must provide documents regarding staff and other resources.

_____	_____	_____	_____
Signature	Printed Name	Title	Date

Page 3

HUB Subcontracting Plan (HSP)
Prime Contractor Progress Assessment Report

This form must be completed and submitted to the contracting agency each month to document compliance with your HSP.

Contract/Requisition Number: _____ Date of Award: _____ (mm/dd/yyyy) Object Code: _____ (Agency Use Only)

Contracting Agency/University Name: _____

Contractor (Company) Name: _____ State of Texas VID #: _____

Point of Contact: _____ Phone #: _____

Reporting Period: (Check only one Month) ☐ - Jan. ☐ - Feb. ☐ - Mar. ☐ - Apr. ☐ - May ☐ - Jun. ☐ - Jul. ☐ - Aug. ☐ - Sept. ☐ - Oct. ☐ - Nov. ☐ - Dec.

Total Contract Amount Paid this Reporting Period to Contractor: $ _____

Report HUB and Non-HUB subcontractor information

Subcontractor's Name	Subcontractor's VID or HUB Certificate Number	Total Contract $ Amount from HSP with Subcontractor	Total $ Amount Paid This Period to Subcontractor	Total Contract $ Amount Paid to Date to Subcontractor	Object Code (agency use only)
		$	$	$	
		$	$	$	
		$	$	$	
		$	$	$	
		$	$	$	
		$	$	$	
		$	$	$	
		$	$	$	
		$	$	$	
		$	$	$	
		$	$	$	
		$	$	$	
		$	$	$	
		$	$	$	
		$	$	$	
		$	$	$	
		$	$	$	
		$	$	$	
		$	$	$	
	TOTALS:	$	$	$	

Signature: _____ **Title:** _____ **Date:** _____

ATTACHMENT – G

DESIGN AND PRODUCTION GUIDELINES

REVISED: June 2006

Texas Department of Transportation

INDEX

PART 1 – SPECIAL PROVISION COMPUTER FILES FOR DOCUMENT AND INFORMATION EXCHANGE

PART 2 – ARCHITECTURAL DESIGN STANDARDS

PART 3 – M.E.P. GUIDELINES

PART 4 – ENERGY CONSERVATION STANDARDS

Texas Department of Transportation

PART – 1

SPECIAL PROVISION COMPUTER FILES FOR DOCUMENT AND INFORMATION EXCHANGE

Rev: June 5, 2006

Texas Department of Transportation

Part 1 – SPECIAL PROVISION COMPUTER FILES FOR DOCUMENT AND INFORMATION EXCHANGE

TABLE OF CONTENTS

PART 1a: Document and Information Exchange

Page 2

PART 1b: AutoCAD Drafting Standards

Page 7

Texas Department of Transportation welcomes feedback. Please send all comments to jtate@dot.state.tx.us. Subject line shall state, "Feedback".

Rev: June 5, 2006

PART 1a: DOCUMENT AND INFORMATION EXCHANGE

A. GENERAL (Texas Department of Transportation, Maintenance Division, Facilities Management Section hereafter referred to in this document as "TxDOT")

1. TxDOT shall not be held responsible for the usage of files contained on the included CD. These files are standard sheets and tools to assist the Architect / Engineer and usage is optional.

2. Copyright – All sheets composing the construction documents shall bear copyright symbol indicating the year of its bid date. This symbol is located on the TxDOT standard cover sheet and title block edit text to reflect the correct year.

3. Progress, final and as-built construction document drawings shall be prepared with Computer-Aided Design and Drawing (CADD) technology. Drawing files shall be delivered to the State in one of the following file formats: DWG - AutoCAD® Release2000 or 2004. Raster scanned drawings will not be accepted. All plot files referenced in drawings shall be provided. Drawings created in 3D format shall be converted to 2D format prior to submittal. Specifications shall also be required in electronic format with all section names following the current CSI format. An index shall be provided. All specification files shall be submitted in MS Word® Release 97 or later compatible files and PDFs capable of being opened with Acrobat Reader 5.0. Each Section shall have its own separate file (i.e. 08111.doc and 08111.pdf). Electronic copies (Compact Disks) of the specifications, progress, final, and as-built drawings, as appropriate, shall be submitted with the hard copy deliverables for each phase of the work being reviewed.

4. Obtaining any standard publications and documents mentioned in this document is the sole responsibility of the consultant.

5. The files shall be submitted on CD, and each CD shall bear a label containing the following information:

   PROJECT NAME
   CONSULTANT NAME
   PROJECT NUMBER
   PHASE NAME
   CONTRACT NUMBER
   DISK <u>NUMBER</u> OF <u>TOTAL</u> DISKS

B. NAME AND FOLDER STRUCTURE:

1. All drawings and specifications shall be submitted to TxDOT in electronic format including a hardcopy. All drawings shall be submitted under one folder. The folder name shall be the firm company name or an abbreviation of the firm name followed by the underscore character and the last three digits of the project number; special characters are prohibited the folder name shall be equal or less than eight characters. Consultants shall break all OLE links and bind with bind selected all external references or delete all paths for each external reference in every drawing prior to submitting the AutoCAD drawings. The submitted drawings shall include all external reference drawings.

C. COVER SHEET

1. **Cover Sheet –** The standard TxDOT coversheet shall be used on all projects. The cover sheet shall include the following:

   a. An area and a region location map
   b. The sheet index
   c. Scope of work in detail
   d. Phasing (If applicable)
   e. Square footage Statistics (as applicable for complete new buildings)
   f. Parking Statistics (as applicable)
   g. A list of applicable code standards used during the project's design (as applicable)
   h. The TxDOT Project number
   i. The Project Title (as it appeared when it received funding)
   j. The title of the project and TxDOT project number shall occur a second time in the location given in the example file where it can be identified when the drawings are rolled up.

D. PROFESSIONAL SEAL

1. **Professional Seal –** If the drawings submitted contain an electronic seal the following information shall be included:

   a. **Architect** – "The record copy of this drawing is on file at the offices of (name of firm), (address of firm). This electronic document is released for the purposes of reference, coordination, and/or facility management under the authority of (name), (registration number) on (date). Any modification(s) to this drawing shall be in compliance with the Texas Board of Architectural Examiners' rules."

   b. **Engineers** – "The seal appearing on this document was authorized by (Example: Leslie H. Doe, P.E. 0112) on (date)."

E. TITLE BLOCK

1. **Title Block –** All sheets except the cover sheet shall use the standard TxDOT title block located on the CD.

F. SHEET SIZE

1. **Sheet Size –** All sheets shall be set up to plot at 22" x 34". All view ports shall be laid out according to the scale factor that each element should be plotted. All disciplines shall follow the architectural view port scale for each floor plan. Provide a 22"x34" and 11"x17" plotted set at time of submittal.

G. COMPANY LOGOS

1. **Company Logos** – Logos may be used, however the logo shall not contain fonts that are not standard AutoCAD® font files.

H. DRAWING FILE NAMES

1. **Drawing File** names shall match the sheet number. Refer to the drawing numbering standards, however replace the period with an underscore. Example: A2.1 = A2_1.DWG.

Drawing files using multiple layout tabs shall be named with the range of sheets included. Example: a file with all of the elevations would be named A5_1to2 (1to2 indicating A5.1 and A5.2 are within that file). Do not have multiple layout tabs within one file that are not directly related to each other by means of a common x-ref.(ie: sections, details or schedules)

I. DRAWING NUMBERING FORMAT STANDARDS

1. **Construction Drawings:** The letter abbreviation for discipline sheet series and the order in which they shall occur will be as follows: D (demolition), C (civil), L (landscape), A (architectural), S (structural), M (mechanical), P (plumbing), E (electrical), FP (fire protection), T (telecommunications), F (furnishings), G (graphics & signage), K (kitchen or food service). Abbreviations for other disciplines shall be assigned as required. Note: Sheet number assignment and sheet content may vary with size and scope of the project. The following should be considered an example of content distribution:

DRAWING NUMBERING STANDARDS		
SHEET SERIES	**SHEET NUMBERING**	**DESCRIPTION**
COVER	COVER	COVER SHEET
DEMOLITION		
D	DA1.1, DA1.2 ETC.	SITE DEMOLITION PLANS
	DA2.1, DA2.2 ETC.	PLAN DEMOLITION PLANS
	DM1.1, DM1.2 ETC.	MECHANICAL DEMOLITION PLANS
	DE1.1, DE1.2 ETC.	ELECTRICAL DEMOLITION PLANS
	DP1.1,DP1.2 ETC.	PLUMBING DEMOLITION PLANS
NOTE: PROJECTS CONTAINING A SMALL AMOUNT OF DEMOLITION WORK (NOT REQUIRING A SEPARATE DEMOLITION CONTRACT) ARE EXEMPT FROM THE REQUIREMENT FOR SEPARATE DEMOLITION SHEETS AND SHALL USE CLEARLY DEFINED AND IDENTIFIED DEMOLITION NOTES. THE STATE'S DETERMINATION AS TO THE REQUIREMENT FOR DEMOLITION SHEETS SHALL BE FINAL.		
CIVIL		
C	C1.1, C1.2 ETC.	CIVIL PLANS
	C2.1, C2.2 ETC.	CIVIL SITE DETAILS
LANDSCAPE		
L	L1.1, L1.2 ETC.	LANDSCAPE SITE PLANS
	L2.1, L2.2 ETC.	LANDSCAPE LEGENDS, SCHEDULES, DETAILS
ARCHITECTURAL		
A	A1.1, A1.2 ETC.	SITE PLAN/ LANDSCAPE , SITE DETAILS
	A2.1, A2.2 ETC.	FLOOR PLANS / PARTIAL PLANS
	A3.1, A3.2 ETC.	ROOF PLAN / DETAILS
	A4.1, A4.2 ETC.	REFLECTED CEILING PLANS
	A5.1, A5.2 ETC.	EXTERIOR BUILDING ELEVATIONS
	A6.1, A6.2 ETC.	ENLARGED FLOOR PLANS AND INTERIOR ELEVA.
	A7.1, A7.2 ETC.	BUILDING SECTIONS
	A8.1, A8.2 ETC.	WALL SECTIONS / PARTITION DETAILS
	A9.1, A9.2 ETC.	FINISH, WINDOW, DOOR SCHEDULES / DETAILS
	A10.1, A10.2 ETC.	MISCELLANEOUS DETAILS
	A11.1	TAS STANDARDS DETAIL SHEET

STRUCTURAL		
S	S1.1, S1.2 ETC.	FOUNDATION PLAN / DETAILS
	S2.1, S2.2 ETC.	FRAMING PLANS / DETAILS
	S3.1, S3.2 ETC.	SCHEDULES
	S4.1, S4.2 ETC.	MISCELLANEOUS DETAILS
SITE UTILITY		
MEP	MEP1.1, MEP1.2 ETC.	SITE UTILITY PLANS
MECHANICAL		
M	M2.1, M2.2 ETC.	MECHANICAL PLANS
	M4.1, M4.2 ETC.	MECHANICAL SCHEDULES
	M5.1, M5.2 ETC.	MECHANICAL DETAILS
PLUMBING		
P	P1.1, P1.1 ETC.	PLUMBING UTILITY PLANS
	P2.1, P2.2 ETC.	PLUMBING PLANS
	P3.1, P3.2 ETC.	PLUMBING RISERS
	P4.1, P4.2 ETC.	PLUMBING SCHEDULES
	P5.1, P5.2 ETC.	PLUMBING DETAILS
ELECTRICAL		
E	E1.1, E1.2 ETC.	ELECTRICAL UTILITY PLANS
	E2.1, E2.2 ETC.	ELECTRICAL PLANS - POWER
	E3.1, E3.2 ETC.	ELECTRICAL RISERS
	E4.1, E4.2 ETC.	ELECTRICAL SCHEDULES
	E5.1, E5.2 ETC.	ELECTRICAL DETAILS
ORDER AND ABBREVIATIONS OF ADDITIONAL DISCIPLINES AS REQUIRED BY PROJECT SCOPE:		
EDV	EDV1.1, EDV1.2 ETC.	VOICE DATA
FP	FP1.1, FP1.2 ETC.	FIRE PROTECTION
T	T1.1, T1.2 ETC.	TELECOMMUNICATIONS
F	F1.1, F1.2 ETC.	FURNISHINGS
G	G1.1, G1.2 ETC.	GRAPHICS AND SIGNAGE
K	K1.1, K1.2 ETC.	KITCHEN OR FOOD SERVICE
ADDENDUM DRAWINGS		
EXAMPLE	AD2C2.1	
	(AD) ADDENDUM DRAWING	
	(2) ADDENDUM NUMBER	
	(C) SHEET SERIES (CIVIL)	
	(2.1) SHEET NUMBER	

J. SCALE AND NORTH ARROW

1. **Scale and North Arrow -** shall occur on all Plan sheets. North Arrow shall indicate plan north. An indication of the scale to which the plan is drawn should be indicated directly under the plan title in either 1/8" or 3/16" letters and in graphic form. A general note should be included on each sheet stating the original sheet size in which the project's Construction Documents were issued.

K. LOCATION KEY PLANS OR SECTIONS DIMENSIONING

1. **Location Key Plans or Sections** – Provide a Location Key whenever location within the building or on the site can be clarified by their inclusion. Location Keys should be located consistently in the lower right corner of the sheet.

L. DIMENSIONING

1. **Dimensioning** – working drawings shall be dimensioned consistently from one side of the face of stud or cmu to the other consistent side of the wall.

M. Exterior Dimension Strings:

1. Exterior dimension strings, as needed, shall consistently occur, a recommended minimum of ½" apart on 22" x 34" sheets, in the following order beginning with the string located farthest from the plan.

    a. The overall out to out dimension string (taken to outside surface of main internal wall construction material, ie. CMU, metal stud. etc.). Note: Foundation plan out to out dimension shall be taken to the exterior edge of the foundation wall.
    b. The structural column grid string (if internal columns exist) runs from the exterior of the out to out dimension string to the centerline of the structural columns.
    c. The mass dimension string shall run from the exterior of the out to out dimension string to the exterior corner of any projections occurring in the plan.
    d. The opening dimension string shall dimension "rough" or "masonry' openings occurring in the plans for windows and doors and shall not continue from the exterior edges of the out to out dimension string. The dimension string shall originate from either outside corners, or centerlines of columns. The dimension shall include, as applicable, R.O. for rough opening or M.O. for masonry opening. For store front or curtain wall systems, which utilize multiple vertical mullions, the string shall locate the centerline of these mullions within the M.O. or R.O. limits.

PART 1b: AUTOCAD DRAFTING STANDARDS

A. TEXT STYLES:

1. Text style named **"TXDOT"** shall reference the font named "**Roman-s".** This text style shall be used for dimensions, leaders, general notes, keyed notes, tags, schedules, risers, door labels, floor plan notes. The text height shall be set at 3/32" when plotted on sheet size ANSI D 22" x 34" landscape.

2. Text style named **"TITLE"** shall reference the font named "**Arial".** This text style will be used for the external reference title block, insertion title block, detail call out block, headers and titles. This text style is already created within the drawings listed above. Headers and titles which identify subtopic information shall be set at 3/16" when plotted on sheet size ANSI D 22" x 34" landscape.

B. DIMENSION STYLES:

1. Architectural and Structural dimension styles named according to the drawing scale shalll reference the **text style named "TXDOT"**. Each scale used in each drawing shall have a dimension style with the overall scale set in accordance to the named dimension style. Each dimension style will have the arrowheads set to architectural tick for dimensions and closed filled arrowheads for leaders.

2. Optional engineering dimension style named **"TXDOT-E"** shall reference the **text style named "TXDOT"**. This dimension style shall have the arrowheads set to closed filled for dimensions and leaders.

C. SCALING SINGLE LINE AND MULTILINE TEXT TO ACHIEVE THE TEXT HEIGHT:

1. Determine the scale by referencing a scaling chart or perform the following arithmetic.

2. If the viewport scale is set at 3/8" = 1' the scale factor can be calculated as shown below. *(1 / (3/8 inches))*(12 inches/ 1 foot) = 8/3*12=32 (The scale factor is 32)*

3. The text shown in model space through the scaled viewport set at a given scale must to be multiplied by the scale factor to achieve the standard text height.

4. The standard printed text height for floor plan notes is 3/32", if the scale for a given viewport is set at 3/8" = 1' then multiply 3/32*32. This means the text height shall be set at 3".

D. SCALING DIMENSIONS AND LEADERS USING DIMENSION STYLES ASSOCIATED TO SCALE:

1. Architectural and Structural disciplines shall use the dimension style to set the desired dimension scale. Each scale has a corresponding dimension style with a preset overall scale. This allows the drafter to set the dimension scale by making the dimension styles corresponding to the desired drawing scale current.

E. SCALING DIMENSIONS BY OVERRIDING DIMENSION STYLES WITH DIMSCALE:

1. Optional engineering disciplines minus Structural can utilize the keyboard command named "dimscale" to set the overall scale required for the drawing scale. This scales the text height, arrowhead size and offsets created in the dimension style for dimensions and leaders.

2. Dimensions and leaders can be updated to the current dimension scale by using the update dimension scale icon.

3. The dimension scale can be changed when drafting at different drawing scales for new dimensions and leaders at a different drawing scale. Once a dimension and/or leader is created, it will not inherit the current dimension scale unless you intentionally update the scale.

F. SCALING LINETYPES

1. The drafter shall set the linetype scale to one, the default setting in AutoCad2004. The check box indicating use paper space units for scaling shall be checked under the linetype manager dialog box. Use the keyboard command named, "ltscale" and set the linetype scale to the scale factor required for the current drawing scale while drafting in model space if desired. The drafter will then see the linetypes as they appear in paper space.

G. EXTERNAL REFERENCES

1. The drafter shall avoid having duplicate copies of the same floor plan in the same drawing; all items shall be drawn over the same floor plan utilizing layers to filter out layers in different view ports.

2. All external references shall be referenced as an overlay utilizing the relative path option and attached at 0, 0, 0 coordinate point. In order to make this possible all external reference files for a specific building shall maintain the same location relative to 0, 0, 0 in order to maintain proper alignment within the building of various externally referenced plans. A base floor plan or any other externally referenced plan shall not be moved once the drawings have started to develop. This can cause significant alignment problems for other files that are referencing these files. This allows all drawings to have the same datum point.

3. Drafters should avoid placing text and notes pertaining to one specific discipline in drawings to be externally referenced. An example of notes required for all drawings would be room labels. The room labels need to be on a separate layer so other disciplines can reference the room labels, yet turn them off for display due to interfering locations in host drawings.

4. All external references drawings shall be placed in the "ACAD/XREF" folder. All projects folders shall have the same directory tree structure to insure that the relative location of the XREF folder with respect to the drawing folders remains the same. The entire project shall be as listed in the diagram below. If a discipline is not required in your project you do not have to have the folder. All drawings shall be under the discipline corresponding folder.

- ACAD
  - ARCH
    - A2.1
    - A4.1
  - CIVIL
  - LANDSCAPE
  - MEP
    - MECHANICAL
    - ELECTRICAL
    - PLUMBING
  - STRUC
  - WATER WASTEWATER
  - XREF

5. **EXTERNAL REFERENCES REQUIRED**: (Note: All objects and entities drawn or inserted into a base plan which are externally referenced by any other drawings shall have the color and line weight set to "By Layer" the drafter is prohibited to override the layer color and line weight of individual items. in a base plan. The drafter may create an additional layer when necessary as described in the layer naming standard)

   a. **Each site shall have a base site plan minus text which shall be referenced into other drawings called "X-SITE". The external reference shall show the following to scale. All other items shall be indicated in the plan sheets.**

      i. New and existing buildings
      ii. Existing and abandoned Utilities including water, electrical, sanitary sewer, natural and LPG gas, compressed air
      iii. Right of Way
      iv. Trees
      v. Grading
      vi. Pavement design
      vii. Flat work
      viii. Fences including gates
      ix. Existing and new fuel islands
      x. Existing and new wash bay pads
      xi. North arrow
      xii. Equipment foundations
      xiii. New and existing asphalt tanks
      xiv. New and existing LPG tanks
      xv. Highway designation
      xvi. In no case should there be text which is specific to one discipline.

   b. **Architectural shall provide a base floor plan minus text for each building which shall show and set the locations for the following. The base plan shall be called "X-ARCH". This is the responsibility of the architectural drafter. All other items shall be indicated in the plan sheets.**

      i. Plumbing fixtures
      ii. Reflected ceiling plan
      iii. Walls
      iv. Identifiable Fire walls
      v. Identifiable walls to structure
      vi. Windows
      vii. Doors
      viii. Room labels (exception to no text allowed)
      ix. Floor drain locations
      x. Modular furniture
      xi. Headers
      xii. Cabinets
      xiii. Structural columns
      xiv. Soffits
      xv. Restroom partitions
      xvi. Gutter down spouts and roof drains
      xvii. Roof outline
      xviii. Edge of slab

c. **Where building requires critical sections when requested by a drafter on a case by case basis, the architectural drafter shall provide a separate drawing with base sections minus text for each building called "X-CUTS". The external reference shall show the following. This is the responsibility of the architectural drafter. All other items shall be indicated in the plan sheets.**

i. Walls
ii. Roof outline
iii. Joist
iv. Columns

d. **Each building shall have a base structural plan minus text to be referenced into other drawings called "X-STRU". The external reference shall show the following. This is the responsibility of the structural drafter. All other items shall be indicated in the plan sheets**

i. Grade beams
ii. Structural columns
iii. Wind bracing
iv. Roof purlins
v. Ceiling joists
vi. Roof joists

e. **Each building shall have a base mechanical plan minus text to be referenced into other drawings called "X-MECH". The external reference shall show the following. This is the responsibility of the mechanical drafter. All other items shall be indicated in the plan sheets**

i. Air Inlets and outlets
ii. Exhaust fans
iii. Infrared heaters including thermostats
iv. Indoor units
v. Outdoor units
vi. Louvers
vii. HVAC equipment including thermostats
viii. Combustion vents through roofs
ix. Fire dampers
x. Roof top equipment including exhaust fans
xi. Unit heaters
xii. Roof Jacks
xiii. Equipment identification labels

f. **Each building shall have a base plumbing plan minus text to be referenced into other drawings called "X-PLUM". The external reference shall show the following. This is the responsibility of the plumbing drafter. All other items shall be indicated in the plan sheets**

i. Water recycle equipment
ii. Water Heaters
iii. Vent stacks

iv. Air Compressors
v. Any plumbing device requiring electrical power
vi. All piping.
vii. Equipment identification labels

g. **Each building shall have a base electrical plan minus text to be referenced into other drawings called "X-ELEC". The external reference shall show the following. This is the responsibility of the electrical drafter. All other items shall be indicated in the plan sheets**

i. Interior lights
ii. Exterior building lights
iii. Switchgear
iv. Voice data outlets
v. Receptacles
vi. Control panels
vii. Annunciator panels
viii. Leak detection panels

H. LAYER NAMING STANDARD: (Refer to figure 2 and 3)

1. Reuse graphic information by layer management to reduce duplication. The standards based on "AIA CAD Layer Standards. Layer names consist of a two-character discipline designator (e.g., "A-"for Architectural, "M-"for Mechanical), followed by a four character major group layer description (e.g., "wall" for walls, "DOMW" for domestic water piping systems. This is then followed by a series of minor group layer descriptions as required up to four characters (e.g., A-WALL-FULL-EXTR for exterior full height walls, A-WALL-FULL-INTR for interior full height walls. P-DOMW-CPIP for domestic cold water piping. Layers are provided on CD; add layers as required following this convention.

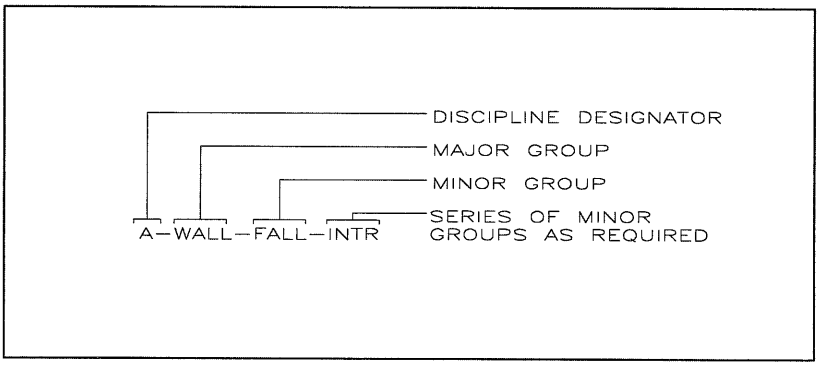

Figure 2

SAMPLE LAYERS FOR ARCHITECTURAL					
NO.	**LAYER NAME**	**DESCRIPTION**	**COLOR**	**LINETYPE**	**LINEWT**
0	LAYER 0				
1	DEFPOINTS	NOT TO BE USED			
General Information					
2	A-ANNO-DIMS	Dimension text	RED	Continuous	0.06
3	A-ANNO-KEYN	Reference keynotes with leaders	YELLOW	Continuous	0.12

4	A-ANNO-NPLT	Non-Plotting graphic Information	BLUE	Continuous	Default
5	A-ANNO-PATT	Miscellaneous patterning and hatching	GREEN	Continuous	0.12
6	A-ANNO-NOTE	General notes and general remarks	YELLOW	Continuous	0.12
7	A-ANNO-SYMB	Miscellaneous symbols	MAGENTA	Continuous	0.12
8	A-ANNO-TEXT	Miscellaneous text with leaders	YELLOW	Continuous	0.12
9	A-ANNO-REFR	Reference files (AutoCad only)	WHITE	Continuous	Default

Floor Information

10	A-FLOR-IDEN	Room Name	GREEN	Continuous	0.12
11	A-FLOR-NUMB	Room/Space identification number	GREEN	Continuous	0.12
12	A-FLOR-OTLN	Floor outline	WHITE	Continuous	0.20
13	A-FLOR-SPCL	Architectural Specialties	GREEN	Continuous	0.12
14	A-FLOR-PATT	Paving, tile, carpet patterns	16	Continuous	0.06

Columns

15	A-HATCH-40	Grid notation	15	Center	0.06
16	A-COLS	Column	9	Continuous	0.12

Walls

17	A-WALL-CAVI	Cavity wall lines	RED	Continuous	0.12
18	A-WALL-CNTR	Wall centerlines	9	Center 2	0.08
19	A-WALL-CWMG	Curtain wall mullions and glass	RED	Continuous	0.10
20	A-WALL-FULL	Full height walls	WHITE	Continuous	0.16
21	A-WALL-FIRE	Fire wall designators	YELLOW	Continuous	0.10
22	A-WALL-IDEN	Wall identification/type text or tags	GREEN	Continuous	0.12
23	A-WALL-MOVE	Moveable walls/ partitions	BLUE	Continuous	0.08
24	A-WALL-PATT	Wall insulation, hatching, fill	14	Continuous	0.06
25	A-WALL-PRHT	Partial height walls	RED	Continuous	0.08
26	A-WALL-SPCL	Wall-hung / attached specialties	RED	Continuous	0.12

Openings

27	A-GLAZ-SILL	Window sills	BLUE	Continuous	0.08
28	A-WALL-HEAD	Door and window headers	CYAN	Continuous	0.12
29	A-WALL-JAMB	Door and window jambs	RED	Continuous	0.12

Doors

30	A-DOOR-FULL	Full height door floor to ceiling	MAGENTA	Continuous	0.08
31	A-DOOR-IDEN	Door number and symbol	GREEN	Continuous	0.10
32	A-DOOR-PRHT	Partial height door, swing and leaf	GREEN	Continuous	0.08
33	A-DOOR-SYMB	Miscellaneous Door symbols	RED	Continuous	0.10

Windows

34	A-GLAZ-FULL	Full height glazed walls	RED	Continuous	0.12
35	A-GLAZ-IDEN	Window number and symbol	GREEN	Continuous	0.10
36	A-GLAZ-PRHT	Window and partial height partitions	RED	Continuous	0.12

Plumbing Fixtures

37	A-FLOR-FIXT	Plumbing fixtures	MAGENTA	Continuous	0.12
38	A-FLOR-TPTN	Toilet partitions	RED	Continuous	0.08

Elevators

39	A-FLOR-EVTR	Elevator cars and equipment	CYAN	Continuous	0.10

Stairs

40	A-FLOR-STRS	Stair risers / treads / ladders	YELLOW	Continuous	0.14
41	A-FLOR-HRAL	Stair handrails, guard rails	RED	Continuous	0.06
Woodwork					
42	A-FLOR-CASE	Casework (manufactured)	CYAN	Continuous	0.10
43	A-FLOR-WDWK	Architectural woodwork	GREEN	Continuous	0.12
Ceiling Penetrations					
44	A-FLOR-OVHD	Overhead items	CYAN	Continuous	0.10
Ceiling Information					
45	A-CLNG-ACCS	Access panels	MAGENTA	Continuous	0.24
46	A-CLNG-CTLJ	Ceiling control joints	YELLOW	Continuous	0.16
47	A-CLNG-GRID	Ceiling grid	RED	Continuous	0.10
48	A-CLNG-OPEN	Openings, ceiling / roof penetrations	GREEN	Continuous	0.21
49	A-CLNG-PATT	Ceiling patterns	WHITE	Continuous	0.14
50	A-CLNG-TEES	Main Tees	BLUE	Continuous	0.12
51	A-CLNG-SUSP	Suspended elements, fans	MAGENTA	Continuous	0.14

Figure 3

Texas Department of Transportation

PART – 2

ARCHITECTURAL DESIGN STANDARDS

Texas Department of Transportation

PART 2 Contract No.

TxDOT
PROVISION
For
ARCHITECTURAL DESIGN STANDARDS
For Capital Program Building Projects
(Revised – August 2004)

A. DESIGN STANDARDS

A.1. TEXAS STAR
All new capital program facilities must have a five-pointed Texas star located above the main building entry. The star should measure a minimum of 24 inches across, tip-to-tip. The star may be mounted on the building face or contained within an exterior wall or gable end.

A.2. BUILDING ROOF PITCH
No flat roofs are allowed on Capital Improvement Program projects. The minimum desired roof slope is 3:12. However, facilities such as storage buildings and shop storage buildings and other "back of house" standard metal buildings may have metal roofs with a minimum 1:12 pitch.

A.3. ROOF OVERHANG
All roofs should have a minimum 24 inches overhang (36 inches is preferred) all the way around the building in order to direct water away from the building perimeter. This includes gable ends.

A.4. GUTTERS & DOWNSPOUTS
It is recommended that all buildings include gutters and downspouts to prevent rutting of topsoil and splash back at the base of perimeter walls. Gutters and downspouts should be located at the edge of the roof overhang and should never be incorporated internally within the building structure or building envelope.

A.5. WINDOWS
Windows located within occupied building areas, conference rooms and meeting rooms should be operable. Single hung aluminum frames glazed with double pane, insulated glass are preferred. If a room contains multiple windows, it is not necessary for all of the windows within the space to be operable. Incorporate a sufficient number of operable windows in each space so as to provide suitable fresh air ventilation if desired by the building occupants. Windowsills in administrative areas should be approximately 34 – 36 inches above finish floor to allow building occupants to view approaching vehicles and visitors. **Do not use gypsum board on any windowsill. Use wood or other durable materials.**

A.6. INTERIOR DOORS AND FRAMES

Utilize solid core wood doors, wood frames and trim at the interior of administrative and office type building facilities. Utilize hollow core metal doors and frames at the interior of shops, equipment storage, material storage, laboratories, and similar type facilities.

A.7. RESTROOMS FOR DISTRICT ENGINEERS

All new District Engineers' offices should have a private restroom located immediately adjacent to their office space. This restroom is strictly for the use of the District Engineer.

A.8. THRESHOLD PROTECTION

Provide a ½" drop at the threshold of all overhead doors to assist in forming a seal at the door. The edge created by this ½" should have steel angles embedded in the concrete. Occasionally drive-tracked vehicles are brought into these bays and the steel angle will prevent chipping of the concrete edge at the overhead doors. Note: There is a standard TxDOT OH door sill detail that illustrates this item.

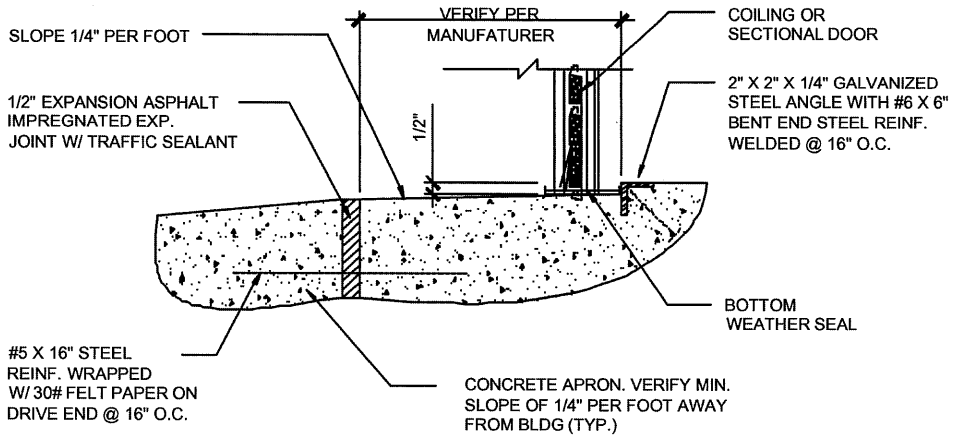

A.9. ARCHITECTURAL GLASS BLOCK

Architectural glass block should not be utilized at any location within Capital Program building facilities.

A.10. VEHICLE PARKING SPACES

All vehicle-parking spaces should be a minimum of eleven (11) feet in width by twenty (20) feet in length. This is necessary due to the fact that the majority of employee and visitor vehicles are standard or larger than standard in width.

A.11. SIDEWALKS AND PAVING ADJACENT TO BUILDING PERIMETER

Any paving or walks adjacent to the perimeter of a building should be a minimum of six (6) inches lower than the elevation of the finish floor within the building, the design should include a gap between the pavement and/or walk and the building foundation. **Provide a max. ½" drop of the sidewalk (including height of metal threshold for code purposes) at all exterior doors. In all instances provide maximum allowable or attainable slope away from the entrances to prevent water from entering the building.**

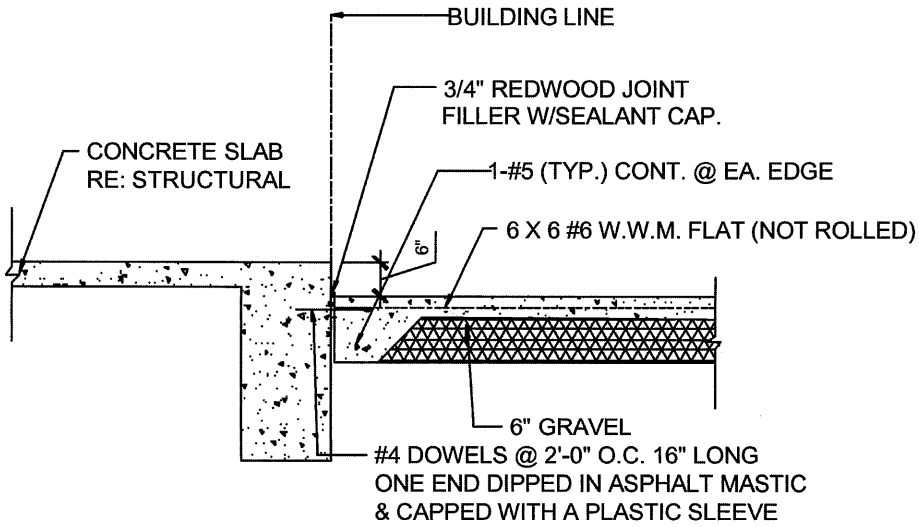

A.12. ASPHALT PAVEMENT

Bill von Rosenberg, AIA & Larry Buttler, P. E. 11.25.02

All asphalt paving shall comply with the following specification as a minimum for all capital improvement projects. Any consultant engineer or district wishing to modify this outline specification must request proposed changes in writing to Zane Webb, P. E., Director, Maintenance Division. The request should be directed through the projects Project Manager to Bill von Rosenberg, Mgr., Capital Improvement Program. Mr. von Rosenberg will present the request to Mr. Webb.

Subgrade: Soils which soil boring samples indicate are stable for the intended purpose, and at the discretion of the engineer, shall not require additives for proper density shall be prepared in situ. All other subgrades shall be scarified or cut and pulverized to a minimum depth of 6". Clay soils shall be lime stabilized by slurry or dry placement method. Sandy soils shall be cement stabilized. All deleterious materials shall be removed from this layer prior to any stabilization and/or compaction. Compaction shall be as specified by the engineer of record but shall not be less than 95% of optimum density. Lime and cement products, their type, percentage and placement shall be as specified by the engineer. Items 260 or 275,

TxDOT Standard Specifications for Construction of Highways, Streets and Bridges, 1993 shall be used as the basis of the specifications and plans. Curing shall be a minimum of 7 days unless modified in writing by the Owner's Representative.

Base: Base shall be a minimum of 12" of crushed limestone. Type, grade, placement and reworking shall be as specified by the engineer. Item 247, TxDOT Standard Specifications for Construction of Highways, Streets and Bridges, 1993 shall be used as the basis of the specifications and plans. If, in the opinion of the engineer, this standard should be modified please prepare a justification for this modification and submit it to TxDOT through your Project Manager. Testing methods are covered in Item 247.2.4.

Prime Coat: The prime coat shall be in accordance with Item 310, TxDOT Standard Specifications for Construction of Highways, Streets and Bridges, 1993 except for areas of non-obtainment for air quality. Item 315 shall be used in non-obtainment areas to prime coat the base. Prime coat, in areas other than non-obtainment, shall be MC30 at .2 gal/S.Y. unless otherwise approved. Curing time shall be determined by the Owner's Representative.

Surface Treatment: **The surface treatment shall be placed as directed by the plans and specifications. Item 316, TxDOT Standard Specifications for Construction of Highways, Streets and Bridges, 1993 shall be used as the basis of the specifications. AC15P asphalt shall be used in accordance with Item 300, TxDOT Standard Specifications for Construction of Highways, Streets and Bridges, 1993. The aggregate shall be in accordance with Item 302, TxDOT Standard Specifications for Construction of Highways, Streets and Bridges, 1993.**

Pavement Surface Course: **The pavement surface course shall be not less than 2" of hot mixed asphalt concrete in accordance with Item 340, TxDOT Standard Specifications for Construction of Highways, Streets, and Bridges, 1993. Delivery, handling, equipment and distribution shall be as directed by the engineer in the plans and specifications.**

These requirements are effective immediately. **The above descriptions are to direct intent and not considered complete specifications. Engineers are directed to the TXDOT web site,** www.dot.state.tx.us/apps/specs/specs.html, **for appropriate special designs, provisions and specifications. Any existing plans and specifications containing non-compliant specifications should be immediately brought to the attention of Bill von Rosenberg (512/416-2382). This applies to completed document sets, work under construction but as yet not having placed base and surface treatment and proposed new construction.**

Typical Pavement Design for Facilities

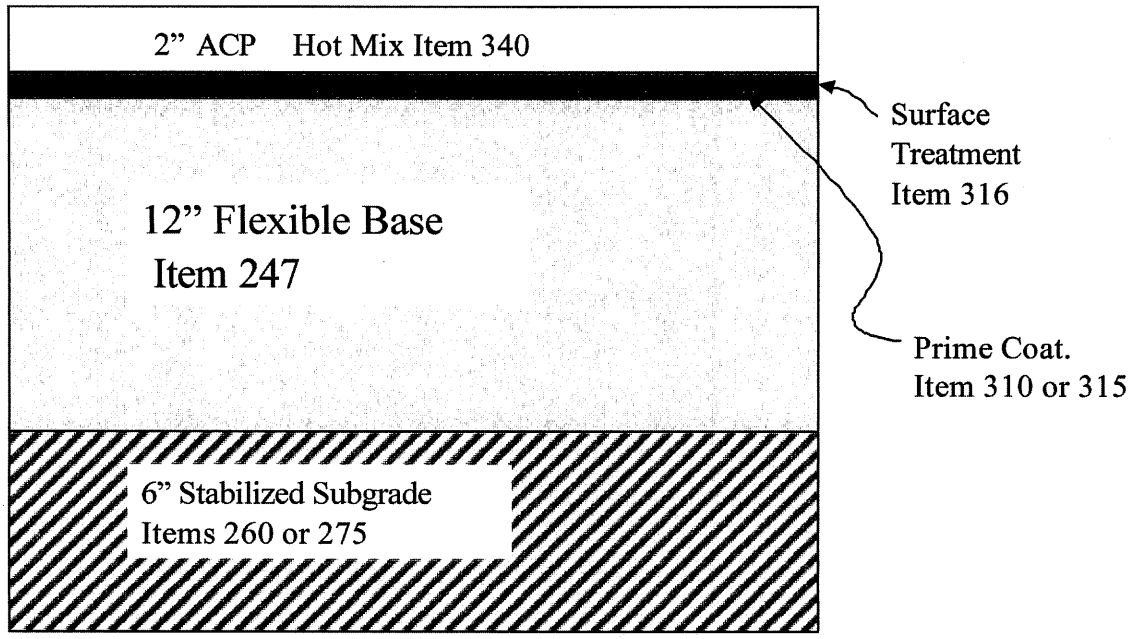

A.13. COLOR SELECTION FOR BUILDING MATERIALS AND SURFACES

All color selections/color schemes must receive the approval of the Director of Maintenance Division, Mr. Zane Webb. The submission of color schemes should be in the form of a color board with samples identified by product name and location within the building facility.

A.14. ASBESTOS CONTROL

To maintain **Asbestos Control,** no product shall be specified that contains asbestos. The Architect / Engineer should make a statement in the specifications that no Asbestos Product was specified.

It shall be noted in the contract documents that General Contractors must make all subcontractors aware that secondary products that are not specifically project specified but supplied by them on the project site must be verified to not contain asbestos. The General Contractor should sign a statement that NO products containing asbestos was purchased by the General Contractor and and Sub-Contractors.

Specifications shall include the stipulation that all questionable product submittals (floor and ceiling tiles, sealant, exterior sheathing, roofing materials) shall contain a letter from the material manufacturer's representative stipulating that the product being installed does not contain asbestos. The TxDOT Project Manager shall maintain these letters in the project file.

These Asbestos related items should be included in the agenda of the pre-construction meeting.

A.15. BREAK / EMPLOYEE MEETING ROOM

In MNT facilities where the only entrance route to the Break / Employee Meeting room leads past the Lobby / Waiting Area, design of this room should include a door to the exterior. This will accommodate work crews avoiding passing through or past the lobby area to attend end of the day meetings.

A.16. PRIVATE OFFICES

Private offices should be designed to comply with the 153 rule located on page 6, part 2 of this document (GUIDELINE FOR SPACE ALLOCATION).

A.17. MAINTENANCE FACILITY & AREA ENGINEER OFFICES

Designs of Maintenance Facilities and Area Engineer Offices should include a minimum of three (3) walled offices, one for the supervisor or area engineer, the assistant supervisor or assistant area engineer and one for the crew chief. (Total office quantity dependent on size of required facility)

A.18. VINYL COVERED GYPSUM BOARD

Vinyl covered gypsum board is not to be utilized at any location within the Capital Program building facilities. Standard gypsum board shall be taped, floated, textured and painted.

A.19. CEILING HEIGHTS

The minimum ceiling height for all interior spaces of the Capital Program building facilities should be 9'-0".

A.20. RECESSED METAL FLOOR GRID AND FLOOR MAT SYSTEMS

Utilize disposable floor mats at entry door locations. Do not specify recessed metal floor grids and floor mat systems.

A.21. OVERHEAD DOOR TRACKS

All overhead doors shall utilize 3" tracks.

A.22. USE OF BERMUDA GRASS

Do not use Bermuda Grass on any project where landscaping and planting beds are used.

A.23. INSULATED GLAZING

Use insulated glazing on all capital project buildings where space within is conditioned.

A.24. LOCATION OF FUELING STATION PANEL AND FIRE PANEL

The location of these panels should be out of immediate view as much as code will allow.

A.25. WAINSCOTS

Do not mix materials in horizontal bands around the perimeters of building walls. Use uniform material the entire height of walls (metal, brick or stone). The use of soldier or Sailor coursing in brick as bands is acceptable.

A.26. MASONRY LEDGES

Wherever masonry veneer is used, provide a masonry ledge on the foundation a minimum of 4" below finish floor, but on coursing. Provide flashing and weeps as to insure proper drainage and the prevention of water entering the building at floor level.

A.27. FLAG POLES

Do not place flag poles in the center of entrance sidewalks.

A.28. INSULATION

Placement of insulation shall be at bottom of roof plane. Do not place directly above or on ceilings.

A.29. RETENSION PONDS

Verify elevations of any retention ponds to ascertain that water will not back up into adjacent areas.

A.30. STOREFRONT SYSTEMS

Storefront systems that terminate at the floor level should have a positive drop at exterior concrete a minimum of ¾".

A.31. SOAP DISPENSERS AT REST AREAS

Soap dispensers at rest areas should be the tank type with the tank located on the wall in the plumbing chase and line fed to pumps mounted on the wall in the rest room.

A.32. COFFEE BAR

All new facilities shall have a 5' coffee bar located in a hallway or other location.

A.33. PROTOTYPE BUILDING DESIGNS

Prototype building designs must consist of a pre-engineered steel structure and, except for metal studs and brick veneer on office area, insulated metal siding exterior through out.

A.34. VESTIBULES

No air lock vestibules at the building entrance. Covered porches are acceptable.

A.35. CULVERTS

Use minimum 18" RCP culverts at driveways. No metal pipe culverts.

A.36. ELECTRICAL OUTLETS

Convenience electrical outlets to be located at 6' O.C. horizontally on interior walls.

A.37. TOILET STALLS

All non ADA compliant toilet stalls to be 3'-4" center to center in width.

A.38. WALL CONSTRUCTION

CMU walls/partitions shall not be used in new TxDOT facilities, including Safety Rest Areas, unless strong justification for its use and applicability for a specific condition is pre-approved - Truck Wash Bay walls, etc.. Steel structural frame w/ metal stud drywalls/partitions and metal siding or brick/stone veneer, where applicable and pre-approved, will be our standard.

B. REQUIRED DOCUMENT REVIEW

In addition to TxDOT in-house review, consultant may be required to coordinate with the following agencies:

B.1. TCEQ - Wetlands Compliance Consultant may be directed by TxDOT to have an environmental study performed to determine if the project is located on land designated as Texas Wetlands (Note: Study may have been completed prior to consultant involvement. If completed, TxDOT will give necessary information to consultant). If the project is located on Texas Wetlands, consultant must coordinate with the TNRCC division to insure necessary restrictions and precautions are followed. Precautions, obligations and restrictions should be noted within the contract documents near the scope of work, to alert the bidding contractors of their obligations.

B.2. TDLR for TAS- Documents must comply with all TAS requirements and be submitted to TDLR for review.

B.3. TCEQ / State of Texas Health Department must review preliminary plans and site information if a septic system and or a waste water treatment plant is to be used. Final permits and agreements are worked out with local authorities. Texas Board of Well Drillers standards must be met if water well is required on the site and the Texas Health Department must approve the water treatment process system.

B.6. Energy Conservation Design Standard for New State Buildings (and renovations) Architect/ Engineer, must certify in writing, compliance with ASHRAE 90.1-2001 And with the TX.GOV.CODE, TITLE 4, CHAPTER 447.004 (E)

C. SHOP DRAWING DISTRIBUTION

Six (6) copies of each shop drawing shall be submitted, by the General Contractor, to the Consultant Architect's Project Manager. The CA's Project Manager will forward those copies to the appropriate engineer or person who needs to review and approve them. They then review and approve, keep One copy for their record, and forwards Five (5) copies back to the CA's Project Manager. The CA's Project Manager sends to the TxDOT Project Manager Two (2) of the remaining five (5) corrected or approved copies. The TxDOT Project Manager will forward those two copies to the appropriate TxDOT engineer or person who needs to review them for general conformance with the project scope of work (Note: Any notes, comments, or changes that the TxDOT reviewer desires to make, must be coordinated with and through the Consultant Architect's Reviewer). They then forward the two (2) copies back to the TxDOT Project Manager. The TxDOT Project Manager keeps One (1) copy in the project file and sends the One

(1) remaining copy back to the Consultant Architect who keeps One (1) copy, and sends One (1) copy to the District Construction Manager. The remaining copies are returned to the General Contractor.

This process is valid on disapproved and re-submittals as well as those that are approved and approved as noted.

D. GUIDELINE FOR SPACE ALLOCATION

TITLE 1	**ADMINISTRATION**
PART 5	**GENERAL SERVICES COMMISSION**
CHAPTER 122	**FACILITIES PLANNING**
SUBCHAPTER B	**SPACE ALLOCATION**
RULE §122.3	**Space Allocation**

A. The Texas Government Code, Title 10, Subtitle D, §2165.104 requires the commission to allocate space to state agencies in the best and most efficient manner possible. In addition, the commission may not allocate space to a state agency under Articles I, II, V, VI, VII, and VIII of the General Appropriations Act, or other specified state agency that exceeds an average of 153 usable square feet of office space for each agency employee for each agency site.

B. For the purpose of calculating the space allocation ratio at a particular site: all offices, workstations, workspaces, storage spaces, support spaces, and circulation spaces within the agency's usable square-footage shall be included except that type of space listed in subsections (d) and (e) of this section.

C. This section applies to the use of state-leased and owned office facilities obtained through the commission.

D. This section does not apply to:

1. agency sites where 15 or fewer employees are located;
2. aircraft hangar, associated storage and administrative space;
3. printing and reprographic plant and associated storage and administrative space;
4. radio antenna space;
5. boat storage space;
6. vehicle parking space;

7. residential space for a Texas Department of Mental Health and Mental Retardation program;

8. residential space for a Texas Youth Commission program;

9. space to be utilized for less than one month for meetings, conferences, seminars, conventions, displays, examinations, auctions, or similar purposes;

10. warehouse space;

11. scientific, audio visual, or photographic (darkroom) laboratory space;

12. contiguous storage (non-office) space exceeding 1,000 usable square feet;

13. hearing rooms required to conduct hearings required under the Administrative Procedure Act, Texas Government Code, Chapter 2001;

14. law or public access library space;

15. records storage or archives (non-office) space; or

16. hospital or clinic and associated administrative space.

E. The following types of requested space uses will be excluded by the commission from calculation of the space allocation ratio when clearly enumerated and justified as described below:

1. consolidated statewide or regional space uses:

   A. Computer or telecommunication operations centers when request includes network and connectivity diagram showing service locations, agencies, and programs;

   B. Full-time training centers when request includes relevant agency programs, and corresponding state or federal mandates;

   C. conference rooms shared by different agencies when request includes signatory acknowledgment of participating agencies;

2. health and human service direct delivery client service space uses:

   A. rehabilitation workshops;

   B. public client waiting areas;

   C. client training classrooms when request includes relevant agency programs' corresponding state or federal mandates;

D. space provided to itinerant staff of another agency at client-service locations when request includes signatory acknowledgment of participant agencies;

E. playrooms;

F. employment resource rooms when request includes corresponding state or federal mandate;

G. observation rooms in clinical or protective services offices;

H. Sunshine or Bridge rooms in protective services offices;

I. medical examination rooms and clinical laboratories of the Department of Health;

J. storage areas for pharmaceuticals, medical supplies, or client equipment and appliances;

3. cafeterias;

4. shared conference rooms scheduled by the commission or by commission delegated agencies;

5. telephone or data (LAN, local area network) closets;

6. trial preparation rooms and litigation file rooms at litigation offices of the attorney general;

7. testing areas and public waiting areas at Department of Public Safety driver license offices;

8. public client waiting areas; and

9. a pro rata share of internal circulation space associated with excluded uses at the site.

F. Variances or Waivers of allocation limits: Any agency request for more than 153 square feet of net usable space per agency employee at a particular site must be submitted to the commission demonstrating conformance with one of the criteria in subsection (g) of this section.

1. Each request must be signed by the agency head and the chairman of the agency's governing body (if any). This authority may not be delegated within the requesting agency.

2. The commission will grant or deny a request in writing.

3. Requests granted or denied by the commission may be provided to the Legislative Budget Board, the Governor's Budget and Planning Office, and the chairman of the House Appropriations Committee.

G. The commission may allocate usable office space in excess of 153 square feet per agency employee, if the commission determines that:

1. based upon a Space Use Study conducted by the commission, a particular type of space should be excluded;

2. a strict application of the standard to a given site would unavoidably and critically impair an agency's functions;

3. it is in the best financial interest to the state to do so;

4. the number of persons routinely working in a space is substantially different from the agency employee calculation;

5. a request is consistent with an agency's plan previously accepted by the commission for implementation of this rule;

6. an emergency lease is necessary to provide facilities in the best interest of the state and strict compliance would unavoidably and critically impair an agency's functions;

7. a negotiated lease with a political subdivision is in the best interest of the State and strict compliance would unavoidably and critically impair an agency's functions; or

8. a negotiated lease in the absence of competition is in the best interest of the State and strict compliance would unavoidably and critically impair an agency's functions.

Source Note: The provisions of this §122.3 adopted to be effective November 21, 1999, 24 TexReg 10040

Texas Department of Transportation

PART – 3

M.E.P. GUIDELINES

TxDOT Maintenance Division
Facilities Management Section
Engineering Services Branch

Design Guide
TABLE OF CONTENTS

NUMBER	TITLE	ISSUE DATE	Rev. No.	Pages
MP1.01	General Mechanical and Plumbing	November 4, 2005	0	3
M2.01	HVAC Systems	November 4, 2005	0	3
M2.02	HVAC Ductwork	November 21, 2005	1	2
M2.03	HVAC Insulation	November 4, 2005	0	2
M2.04	HVAC Ventilation	November 23, 2005	1	2
M2.05	HVAC Testing, Adjusting and Balancing	November 23, 2005	1	1
M2.06	HVAC Plumbing	November 4, 2005	0	1
M2.07	HVAC Controls	November 4, 2005	0	1
P2.01	Water Plumbing Systems	November 4, 2005	0	2
P2.02	Sanitary Plumbing Systems	November 4, 2005	0	1
P2.03	Exterior Plumbing Systems	November 4, 2005	0	1
P2.04	Fuel Gas Plumbing Systems	November 4, 2005	0	1
P2.05	Compressed Air Plumbing Systems	November 4, 2005	0	1
P2.06	Grease and Oil Plumbing Systems	November 4, 2005	0	1
E1.01	General Electrical	(TBD)		
E1.02	Electrical Distribution System	November 4, 2005	0	3
E1.03	Emergency Generators	November 4, 2005	1	1
E1.04	Lighting	November 4, 2005	0	2
E1.05	Gas Monitoring System	November 4, 2005	0	2

TxDOT Maintenance Division
Facilities Management Section
Engineering Services Branch

Design Guide

Title:	**General Mechanical and Plumbing**	**Number:**	**MP1.01**
Issue Date:	**November 4, 2005**	**Rev #:**	**0**

Approved: _____
Engineering Services Supervisor

A. CODES AND STANDARDS

1. Mechanical and Plumbing designs, specifications and equipment selections shall conform to the current edition of ASHRAE/ANSI/IES Standard 90.1, "Energy Standard for Buildings Except Low-Rise Residential Buildings." The Engineer shall also submit certification of compliance and documentation as required by the State Energy Conservation Office (SECO) for submission to TxDOT.

2. All designs shall be based on standards and recommendations made in the current editions of:

   a. International Building Code

   b. Uniform Mechanical Code

   c. Uniform Plumbing Code

   d. American Society of Heating Refrigeration and Airconditioning Engineers (ASHRAE) Handbooks and Standards

   e. American Society of Plumbing Engineers (ASPE) Data Books

   f. American Conference of Governmental Industrial Hygienists (ACGIH) "Manual of Recommended Practice" for Industrial Ventilation

   g. American Society of Mechanical Engineers (ASME) Standards

   h. American National Standards Institute (ANSI) Standards

   i. American Refrigeration Institute (ARI) Standards

B. QUALITY ASSURANCE

1. The Mechanical and Plumbing Contractors shall be required to be licensed either by the State of Texas, or by the local jurisdiction, whichever is appropriate to their area of expertise.

   a. All HVAC work shall be performed by an air conditioning contractor holding a current Class A or B air conditioning license as issued by the Texas Department of Licensing and Regulation.

   b. All plumbing work shall be performed by a firm holding a valid Master Plumber License issued by the Texas State Board of Plumbing Examiners (TSBPE). Employees performing the work shall have a valid Journeyman Plumber license issued by TSBPE.

   c. The contractor shall provide evidence of required licensing including expiration dates when so requested by the State's Representative.

2. All workers shall be required to be thoroughly experienced in the particular class of work for which they are employed.

3. All work performed by the Contractor shall be professional in design, equipment selection and installation.

C. SUBSTITUTIONS

1. Substitutions, unless a sole source manufacturer is justified and approved by TxDOT in writing, shall be allowed for materials or equipment for which the performance, capacity and quality are equal to that scheduled or specified. Use the terms, "or approved equal," and include on the drawings and in the specifications the following paragraphs:

   a. "It is the intent of the Drawings and/or Specifications neither to limit products to any particular manufacturer nor to discriminate against an APPROVED EQUAL product as produced by another manufacturer. Some proprietary products may be mentioned to set a definite standard for acceptance and to serve as a reference in comparison with other products. On the other hand, when a manufacturer's name appears in these Specifications or in the Drawings, it shall not be interpreted that the manufacturer is unconditionally acceptable as a provider of equipment for this project. The successful manufacturer or supplier shall meet all of the provisions of the appropriate specification(s).

   b. "The specified products have been used in preparing the Drawings and Specifications and thus establish minimum qualities with which substitutes must be at least equal to be considered acceptable. The burden of proof of equality rests with the Contractor. The decision of the Engineer is final.

   c. "In the event that the Contractor submits a proposal for a substitution, and the review and negotiation of the substitution (if handled in a timely, expedited manner) results in a delay of the contract work, then a reasonable extension of

time for the contract may be allowed."

2. Substitutions or deviations shall only be made by specific request by the Contractor. The Uniform General Conditions also require that the Contractor make written requests for "specific deviations" from the Construction Documents.

3. It should also be noted that deviations from the Contract Documents will not be allowed in the submittal process. If deviations are included in submittals, but not specifically noted, then the deviation will not be allowed, even if the submittal is noted "without exceptions."

D. ROOF PENETRATIONS

1. Equipment curbs, if used, shall be supplied by the Mechanical Contractor, and installed by the Roofing Contractor. The Roofing Contractor shall also provide, install, flash and seal all penetrations for sanitary vents indicated in the plumbing plans.

2. The number and size of roof penetrations shall be minimized.

E. TRENCHING

1. All underground piping systems shall be buried a minimum of 24 inches deep and bedded in a minimum of 2 inches of clean sand, above, below, and on all sides.

2. If trenching across existing pavement, contact project manager about whether to allow open trenching or require boring under pavement.

3. In all cases, when installing piping under paved traffic areas, sleeves shall be provided to allow for future replacement of the piping system. Sleeve sizes shall be a minimum of two nominal pipe sizes larger than the pipe, or 6 inches, whichever is greater. Sleeves shall be Schedule 80 PVC, C-900 PVC, or piping of comparable strength to withstand anticipated traffic and shall extend approximately 4 feet beyond the pavement on both sides.

4. Specifications shall contain a requirement for a contractor-provided Trenching Plan, sealed by a Civil Engineer, for trenches deeper than five feet.

F. PROHIBITION OF ASBESTOS

1. Include in the project specifications a section detailing the prohibition of materials and equipment containing any form of asbestos. Also require a certification from the Contractor. A sample specification section (with blank affidavit form attached) is available upon request.

TxDOT Maintenance Division
Facilities Management Section
Engineering Services Branch

Design Guide

Title: **HVAC Systems** **Number:** **M2.01**

Issue Date: **November 4, 2005** **Rev #:** **0**

Approved: _____
Engineering Services Supervisor

A. SPECIAL CONSIDERATIONS

1. Safety Rest Areas, located in remote, rural areas, are frequently subject to high levels of vandalism as well as reduced levels of inspection and maintenance because of a limited availability of qualified HVAC service contractors. The designer should give consideration to using packaged, and/or unitary, heating/cooling equipment for "Type 3" (unmanned) Safety Rest Areas. The necessary capacities of equipment for Types 1 and 2 (manned 24/7, and manned during the day, respectively) Safety Rest Areas may require larger split systems. Do not use LPG at Safety Rest Areas.

2. Most TxDOT offices are also in areas where the availability of contractors is limited. It has proven to be successful to restrict HVAC system design considerations to unitary and/or self contained equipment.

3. Every attempt should be made to limit the size of heating and cooling equipment to a nominal 5 tons. It will also be necessary, due to the likely unavailability of natural gas, to use heat pumps.

4. It is preferred that heatpump equipment provide back up electric heat in all locations.

B. HVAC SYSTEM DESIGN CRITERIA

1. All system designs and equipment selections shall comply with the current Texas State Energy Standard. Currently, this standard is the ASHRAE/ANSI Standard 90.1-2004.

2. HVAC cooling and heating system designs shall be based on the criteria recommended in the current edition of the ASHRAE Handbook of Fundamentals for the location (or a representative location) of the project site, and all calculations shall follow the recommended procedures given. Climatic data used shall be for 99.6% Heating Dry Bulb and 0.4% Cooling Dry Bulb/Mean Wet Bulb.

3. Acceptable ranges of temperature and humidity control shall be compatible with the zones shown in Figure 5, page 8.12 of the 2005 ASHRAE Handbook of Fundamentals, "ASHRAE Summer and Winter Comfort Zones."

4. Ventilation design shall conform to the current edition (with all current addenda) of ASHRAE Standard 62.1, "Ventilation for Acceptable Indoor Air Quality."

C. EQUIPMENT MANUFACTURERS

1. For small commercial equipment (5 tons or less) such as split DX or heatpump with gas or electric-backup heat, the following manufacturers are considered acceptable: Lennox, Carrier, and Trane.

2. For large commercial equipment the following have been found to be acceptable:

   a. Air handlers: Lennox, Trane, Temtrol, Thermal, and Marcraft.

   b. Chillers: Trane, Carrier, and York.

D. EQUIPMENT AND SYSTEMS

1. Note comments on "Special Considerations" above.

2. System designs for offices shall be based primarily on horizontal, split systems. Locate equipment above ceilings in close proximity to the zone served for a minimum length of ductwork. Unit shall be installed high enough for sufficient headroom for ease of maintenance, but low enough to ensure ease of access. (Note that a detail is provided for specific requirements.)

3. All horizontal cooling units shall be installed with overflow pans with a float micro switch to disable the unit in the event the pan fills with water. The pan shall also be installed with a capped drain.

4. In general, air conditioning units and systems should be limited to a maximum of nominal 5 ton cooling capacity, keeping the supply air flow below 2000 cfm. (This will avoid the code requirement to install duct mounted smoke detectors and related fire alarm controls.) **Note that the "twinning" of units is not acceptable.**

5. Air conditioning equipment shall be sized and selected to accommodate published sensible/total cooling ratios required by the zone loads. Specifications shall require that systems be matched, performance-rated equipment.

6. All unitary systems and equipment shall be required to be certified in accordance with ARI Standard 210/240, rated in accordance with ARI Standard 270, and listed by Underwriters Laboratories (UL). Equipment shall bear the seal of ARI for unitary equipment, as well as the UL seal.

7. When applying unitary packaged or split system equipment, special care shall be taken not to exceed the allowable external static pressure (ESP) for the equipment, as

published by the equipment manufacturer.

8. Provide a dedicated, "ductless" split system for Data/Com ("Hub") Rooms, to provide cooling only. The units shall be selected to accommodate the high sensible cooling loads.

9. All condensate lines shall be rigid, hard drawn, Type "K" copper, fully insulated with closed-cell foam type insulation (Armaflex or approved equal).

10. In shop and equipment buildings, only ventilation shall be provided, except that tube type radiant heat shall be provided for vehicle shop areas, only. The only exceptions shall be office areas and special purpose areas, individually designated for specific environmental control. Office areas shall be considered the same as in office buildings.

E. WARRANTY:

1. The specifications shall require that the Contractor shall guarantee all installed equipment, material, and work against any defects in material or workmanship and shall satisfactorily correct, at no cost to the State, any such defect that may become apparent within a period of one year after completion of the installation. The warranty period shall commence on the date of acceptance of the contract by the State. A manufacturer's 5 year compressor warranty shall be required for all sizes of unitary and self-contained direct expansion equipment. Insurance policies shall not acceptable.

TxDOT Maintenance Division
Facilities Management Section
Engineering Services Branch

Design Guide

Title: **HVAC Ductwork** **Number:** **M2.02**

Issue Date: **November 21, 2005** **Rev #:** **1**

Approved: _____
Engineering Services Supervisor

A. DUCTWORK

1. Ductwork systems designed for supply, return, and exhaust systems shall minimize static loss and shall accommodate the available static from the air handler, furnace or fan. The total static loss shall be calculated or simulated by computer program. The results of the calculation or simulation shall be available for review on request.

2. Air Conditioning supply ductwork shall be minimum 26 gauge galvanized sheetmetal construction, constructed and installed to a SMACNA 2" rating. Sheetmetal thicknesses shall comply with the following table.

Maximum Rectangular Duct Size	US Standard Gauge	Thickness in inches		
		Minimum	Maximum	Nominal
Up to 10"	26	.0187	.0247	.0217
11" – 12"	24	.0236	.0316	.0276
13" – 14"	22	.0296	.0376	.0336
15" – 18"	20	.0356	.0436	.0396
19" – 20"	18	.0466	.0566	.0516
21" – 24"	16	.0575	.0695	.0635
Above 24"	Reinforcement is required for duct dimensions above 24". See Table 1-5 in 1995 SMACNA "HVAC Duct Construction Standards, 2" w.g., Rectangular Duct Reinforcement."			

3. Furnish splitter dampers and turning vanes at all tee connections.

4. Furnish single thickness turning vanes at all 90° elbows.

5. Furnish manufactured taps with raised regulator volume dampers.

6. Design systems with runouts of externally insulated round metal duct and connect diffusers using flexible metal duct (maximum 4'-0" in length).

7. The lengths of duct runs shall be minimized in consideration of the ability of the unitary equipment to develop limited static pressure. Ductwork shall be sized to reduce static loss and generated noise in the system(s).

8. Duct sealant shall be water based latex type. Solvent based duct sealants shall be prohibited.

9. Fabricate and support ductwork in accordance with SMACNA duct construction standards.

10. Flexible duct (flex duct), if used, shall be plenum rated, Flexmaster TL-V "or approved equal," constructed of round, flexible expanded aluminum, insulated with fiberglass blanket, and protected with a reinforced metalized outer jacket. Maximum thermal conductance of the insulation shall be 0.23. The flexible aluminum duct shall be secured and sealed to the adjoining sheet metal duct using sheetmetal screws and duct sealant. All materials shall be installed as recommended by the manufacturer. Flame spread/smoke developed ratings shall be equal to or less than 25/50 respectively. Lengths of flex duct runs shall be limited to 48 inches in each application.

11. Ceiling supply air diffusers shall be louvered, pattern type. **Neither perforated nor linear diffusers nor returns shall be used on TxDOT projects without specific approval**. All diffusers shall be all aluminum construction with a baked coating to match the surrounding construction, or as specified by the Architect. Extruded aluminum is preferred. Each device may include an OBD, but it SHALL NOT be used for balancing, except under special, pre-approved circumstances. All supply diffusers and outside air grilles shall be insulated externally.

12. Ceiling return air grilles may be either pattern type, or egg-crate. ("Egg-crate" is preferred.) All grilles shall be all aluminum construction with a baked coating to match the surrounding construction, or as specified by the Architect. Extruded aluminum is preferred. It shall be required that the interior of the duct shall be painted flat black insofar as it is visible from the occupied space. **Neither perforated nor linear return air grilles shall be used on TxDOT projects without specific approval.**

13. Sidewall supply and return grilles shall be vertical bar type and shall include integral opposed blade dampers. All grilles shall be all aluminum construction with a baked coating to match the surrounding construction, or as specified by the Architect. Extruded aluminum is preferred.

14. All air devices shall be commercial quality, NOT residential.

15. The drawings shall indicate a volume damper for each diffuser drop, at the point of tap from the main ("trunk") supply duct. All volume dampers shall consist of raised-regulator type, insulated under the regulator.

TxDOT Maintenance Division
Facilities Management Section
Engineering Services Branch

Design Guide

Title: **HVAC Insulation** **Number:** **M2.03**

Issue Date: **November 4, 2005** **Rev #:** **0**

Approved: _____
Engineering Services Supervisor

A. INSULATION

1. All insulation shall be applied by mechanics skilled in the installation of insulation and regularly engaged in such occupation.

2. All adhesives, mastics, sealers, etc., utilized in the fabrication of these systems shall meet NFPA and UL requirements for fire resistant ratings (maximum of 25 flame spread, 10 fuel contribution, and 50 smoke developed ratings, when tested to NFPA 255 standards), shall carry a UL label on each container and/or package, and shall be approved by the insulation manufacturer for guaranteed performances when incorporated into their insulation system. Certificates to this effect shall be submitted along with the Company's submittal prior to installation. All surfaces to be insulated shall be clean and dry before applying insulation.

3. All supply, return, and outside air ducts shall be externally insulated with Owens-Corning or equal, minimum 1" thick all service blanket type, commercial grade, flexible glass fiber insulation with Kraft vapor barrier facing. Internally insulated ductwork shall be avoided. Specifications shall stipulate that all seams shall be sealed.

4. All specified insulation shall be applied by mechanics skilled in this particular work and regularly engaged in such occupation.

5. All surfaces to be insulated shall be clean and dry before applying the insulation.

6. All heating hot water and chilled water piping shall be insulated with 1-1/2" thick polyurethane closed cell pipe insulation complete with all service jacket (ASJ) vapor barrier. Fittings shall be insulated with the same thickness as the pipe insulation and covered with PVC molded insulation covers with complete vapor seal. ASJ vapor barrier laps shall be stapled and sealed with approved vapor barrier mastic and/or adhesives.

7. The contractor shall provide an isolating vapor seal between the pipe insulation jacket and the pipe at all butt joints, fittings, flanges, valves and hangers.

8. Valves and flanges shall be insulated with mitered polyurethane covers and vapor sealed.

9. Minimum sixteen (16) gauge galvanized metal insulation saddles, 18 inches long, shall be used at all hangers and points of support.

10. Refrigerant liquid and suction lines shall be insulated with a minimum of 1/2" closed cell Armaflex insulation or approved equal.

TxDOT Maintenance Division
Facilities Management Section
Engineering Services Branch

Design Guide

Title: **HVAC Ventilation** **Number:** **M2.04**

Issue Date: **November 23, 2005** **Rev #:** **1**

Approved: _____
Engineering Services Supervisor

A. OFFICE BUILDING VENTILATION

1. Do not return air from restrooms where the unit serves other areas in the building. The minimum exhaust from restrooms shall be as recommended in the current version of ASHRAE Standard 62.1. The area immediately in front of shower stall(s), and immediately above the farthest water closet shall be exhausted.

2. Conditioned air shall be supplied to restrooms and shower rooms in the area of the lavatories, close to the entrances to the rooms.

3. Power to exhaust fan(s) shall be switched with the lighting in the restroom or shower room. Exhaust fans shall be roof mounted and shall be as manufactured by Greenheck, Cook, or ACME.

B. SHOP BUILDING VENTILATION

1. Ventilation from rooms and areas in Shop Buildings shall be as recommended in the current version of ASHRAE 62.1. Ventilation fans shall be located on the roof of the building.

2. In Shop and Equipment Buildings where required, exhaust for LPG alarm or emergencies shall be installed in the rear wall, at 18 to 24 inches above finished floor to the bottom of the exhaust opening. This type of ventilation shall be exclusive and redundant to the required building ventilation system(s) and shall be controlled by the LPG detection system(s).

3. Openings in walls and roofs for exhaust/ventilation fans shall be of a minimum size required for the air being exhausted.

4. All exhaust fans shall be installed with gravity or motorized backdraft dampers. Motorized dampers shall only be employed where absolutely necessary. Dampers shall be installed in fabricated collars extended from the roof or wall penetration and

covered with birdscreen (1/4" by 1/4") mesh.

5. Outside air louvers shall be installed to accommodate the exhaust/ventilation fans. Louvers shall be sized to provide for the total flow of all fans operating simultaneously. All louvers shall be designed to incorporate gravity backdraft dampers. Motorized dampers shall be used only when required for the proper operation of the system(s).

TxDOT Maintenance Division
Facilities Management Section
Engineering Services Branch

Design Guide

Title: **HVAC Testing, Adjusting and Balancing** **Number:** **M2.05**

Issue Date: **November 23, 2005** **Rev #:** **1**

Approved: _____
Engineering Services Supervisor

A. TESTING, ADJUSTING AND BALANCING

1. An independent TAB firm, employed by the Contractor, shall perform Testing, Adjusting and Balancing (TAB) of all HVAC systems over 500 cfm total airflow. The TAB firm shall be certified by NEBB, AABC, or both. Full compliance with NEBB or AABC Standards shall be required.

2. The Contractor shall make all necessary adjustments to assure proper balance of air within the limits recommended in AABC National Standards. Refer to Chapter 16, Figure 16.1, and Chapter 20. A final TAB report shall be submitted using NEBB or AABC recommended forms. Final payment shall not be approved prior to receipt and approval of this drawing and report by the engineer of record <u>and</u> the state's engineer.

3. The measurement and verification of building conditions by the final test and air balance report shall be based on the engineer's design, as documented in the construction plans and specifications.

TxDOT Maintenance Division
Facilities Management Section
Engineering Services Branch

Design Guide

Title:	**HVAC Plumbing**	**Number:**	**M2.06**
Issue Date:	**November 4, 2005**	**Rev #:**	**0**

Approved: _____
Engineering Services Supervisor

A. HVAC Plumbing:

1. Refrigerant line sizes shall be selected to optimize performance of the equipment and to maintain the published seasonal efficiency ratings (SEER or EER) of the manufacturer. The sizing of the line sets shall incorporate the length of the line set as well as the capacity of the system. All refrigerant piping shall be sized and installed as recommended by the manufacturer of the equipment.

2. Condensate lines shall be rigid, hard drawn, Type K copper, insulated with 1/2" Armaflex (or approved equal) closed cell insulation, including the trap and vent, installed in accordance with the manufacturer's published recommendations.

3. Condensate drains shall terminate at the nearest floor drain, mop sink or service sink. (Never hard-connect to sanitary drain. Always provide an air gap.)

4. Secondary or "overflow" drains shall be piped to an obvious location, over a sink, shower, or drain, but shall not drain to a location where damage to the building or furnishings is possible.

TxDOT Maintenance Division
Facilities Management Section
Engineering Services Branch

Design Guide

Title: **HVAC Controls** **Number:** **M2.07**

Issue Date: **November 4, 2005** **Rev #:** **0**

Approved: _____
Engineering Services Supervisor

A. HVAC Controls:

1. Where a campus wide EMCS (Energy Management and Control System) exists, all controls shall be direct digital, specified to interface with the existing system, or to a new central EMCS (if a new campus).

2. For stand-alone office and shop (non-public) buildings, install commercial programmable thermostats, without guard.

3. All HVAC controls in public buildings (e.g. Safety Rest Areas) shall be programmable thermostats with vandal resistant covers on accessible thermostats in public areas. An option available to the designer is to provide remote sensors mounted in return air ducts, with the temperature control located remotely in mechanical room(s).

4. Thermostats (or zone temperature sensors) shall be located within the zone being air conditioned in the interior of the building, away from outside walls. The preferred location is close to the return air grille serving the zone.

TxDOT Maintenance Division
Facilities Management Section
Engineering Services Branch

Design Guide

Title: **Water Plumbing Systems** **Number:** **P2.01**

Issue Date: **November 4, 2005** **Rev #:** **0**

Approved: _____
Engineering Services Supervisor

A. Domestic Water Plumbing:

1. From the water meter to a point 5 feet from the footprint of the building, water piping under 4" shall be soft drawn Type K copper. For 4" and above, water piping shall be C-900, gasketed PVC.

2. Water piping from 5 feet outside the building footprint to the building and under slab shall be soft drawn Type K copper, to a point 12" A.F.F. All above slab water piping shall be hard drawn, rigid Type K copper.

3. All buried water piping, including under slab, shall be bedded in sand, a minimum of two inches on all sides, and shall be a minimum of 24 inches below finished grade or floor.

4. All flush valves in office and shop buildings shall be exposed, Sloan Royal, Zurn AquaVantage, or approved equal.

5. All faucets in office and shop buildings shall be specified as Chicago Faucets "or approved equal" with #369 handles (standard handles), <u>not "wrist blade" handles</u>. (Note that these handles comply with ADA accessibility requirements on Chicago Faucets faucets.)

6. All flush valves and faucets in Safety Rest Area restrooms (in public areas) shall be concealed, automatic, electronically actuated Sloan Royal, Zurn AquaVantage, or approved equal.

7. Pitch all water piping to a drainable location; all piping shall be drainable.

8. Insulate all hot and cold water piping with a minimum of one inch thick, jacketed fiberglass insulation, and provide PVC covered fitting insulation at all fittings and valves. Insulate all exposed piping under all lavatories in the Restrooms with insulation designed for that purpose, such as by Truebro.

9. Water closets and urinals shall be vitreous china. All water closets and urinals in all types of buildings shall be wall hung. All fixture heights shall conform to ADA requirements. All installations shall be required to include water closet chairs and carriers.

10. All lavatories shall be vitreous china. If counter mounted lavatories are used, they shall be self-rimming type. (Under counter-mounted lavatories are not acceptable.) The installation of wall hung lavatories shall be required to include extended arm carriers.

11. Provide a mop sink and floor drain in Janitor Closets for maintenance use. The faucet scheduled for installation with mop and service sinks shall be based on Chicago Faucet products. Specify a wall-braced faucet with bucket hook. Provide a backsplash and wall mounted mop hooks with all mop sinks.

12. Provide floor drains in Restrooms, located under the open area of partitions and under lavatory areas to avoid tripping hazards.

13. All floor drains (except floor drains in shower stalls) shall have trap primers.

14. "Instantaneous" electric water heaters are prohibited for use on TxDOT projects.

15. Emergency eyewashes and showers shall be provided in all labs and vehicle shops. Provide a locking ball valve for isolation for service, locked in the open position. The installation shall conform to NFPA 101.

B. Non-potable Water Systems

1. Water supplies to non-potable water systems (such as water truck fill stations, irrigation, and wash bay use) shall be provided with full sized double check valve assemblies, manufactured and listed, with test ports, as defined in the Uniform Plumbing Code. The double check valve assemblies shall be installed in a ground vault designed and sized for that purpose.

2. Water piping sizes for water truck filling stations shall provide a minimum of 2000 gallons in a maximum of 20 minutes, for a minimum of 100 gallons per minute. The minimum piping size shall be two inches.

TxDOT Maintenance Division
Facilities Management Section
Engineering Services Branch

Design Guide

Title:	**Sanitary Plumbing Systems**	**Number:**	**P2.02**
Issue Date:	**November 4, 2005**	**Rev #:**	**0**

Approved: _____
Engineering Services Supervisor

A. Sanitary Plumbing

1. Sanitary piping from a point 5 feet outside the building footprint to the building and under slab shall be gasketed cast iron with "Ty-seal" type joints to a point at least 12" A.F.F. All piping above slab in buildings (including vents) shall be no-hub cast iron or gasketed cast iron with "Ty-seal" type joints.

2. All sanitary waste and vent piping shall be sloped 1/8" to 1/4" per foot (1 to 2 percent) in the direction of flow.

3. Roof drain piping within buildings shall be insulated (as specified for water piping) a minimum of 15 feet from the drain.

4. Cleanouts shall be shown to be installed so that the maximum amount of piping can be accessed.

TxDOT Maintenance Division
Facilities Management Section
Engineering Services Branch

Design Guide

Title:	**Exterior Plumbing Systems**	**Number**	**P2.03**
Issue Date:	**November 4, 2005**	**Rev #:**	**0**

Approved: _____
Engineering Services Supervisor

A. Exterior plumbing

1. All buried piping systems, including sleeves, shall be a minimum of 24" deep, bedded in minimum 2" of sand on all sides, top, and bottom. This shall include under slab piping.

2. Exterior water piping up to 5 feet from the building footprint shall be as described in Design Guide P2.01.

3. Exterior fuel gas piping shall be as described in Design Guide P2.04.

4. Exterior compressed air piping shall be as described in Design Guide P2.05.

5. Exterior sanitary piping up to 5 feet from the building footprint shall be Schedule 40 or C-900 PVC.

6. Sanitary piping shall have cleanouts at intervals no greater than 75 feet.

7. Exterior hose bibbs on building(s) shall be freezeproof.

8. Exterior plumbing under pavement shall be sleeved as described elsewhere in these guidelines.

TxDOT Maintenance Division
Facilities Management Section
Engineering Services Branch

Design Guide

Title: **Fuel Gas Plumbing Systems** **Number:** **P2.04**

Issue Date: **November 4, 2005** **Rev #:** **0**

Approved: _____
Engineering Services Supervisor

A. Fuel Gas (natural and LPG gas) Piping

1. All fuel gas piping and fittings within buildings shall be schedule 40 black steel, threaded up to 2 inch, and welded 2-1/2" and over.

2. Piping size changes shall be made using bell reducers, or reducing fittings. The use of bushings shall be prohibited.

3. Exterior, buried fuel gas piping shall be either corrosion protected black steel or safety yellow colored polyethylene piping, specifically manufactured for fuel gas service. Joining of polyethylene piping shall be by butt fusion method.

4. The construction documents shall specifically prohibit the use of galvanized steel and copper piping and fittings for use as fuel gas piping.

5. Dirt legs and flexible gas hose shall be required at all connections to appliances and points of use.

TxDOT Maintenance Division
Facilities Management Section
Engineering Services Branch

Design Guide

Title:	**Compressed Air Plumbing Systems**	**Number:**	**P2.05**
Issue Date:	**November 4, 2005**	**Rev #:**	**0**

Approved: _____
Engineering Services Supervisor

A. Compressed Air Systems (Shop Buildings and Labs)

1. Compressed air piping shall be rigid, hard drawn, Type K copper.
2. Dirt legs and quick disconnect fittings shall be required at all points of use.

TxDOT Maintenance Division
Facilities Management Section
Engineering Services Branch

Design Guide

Title:	**Grease and Oil Plumbing System**	**Number:**	**P2.06**
Issue Date:	**November 4, 2005**	**Rev #:**	**0**

Approved: _____
Engineering Services Supervisor

A. Centralized Grease and Oil Systems (Shop Buildings, if required)

1. Grease and oil piping shall be Schedule 80, black steel pipe and fittings.
2. Systems shall include central grease system and pump, piped to a point of use in the center of the vehicle shop.
3. Systems shall include a set of retractable reels for grease, oil (if used), water, compressed air, and 120 volt power.

TxDOT Maintenance Division
Facilities Management Section
Engineering Services Branch

Design Guide

Title: **Electrical Distribution System** **Number:** **E1.02**

Issue Date: **November 4, 2005** **Rev #:** **0**

Approved: _____
Engineering Services Supervisor

A. RACEWAYS

1. Minimum conduit size shall be 3/4".
2. Minimum Underground Raceway Size: 1" unless otherwise specified.
3. Conduit type shall be per the following:
   a. All interior wiring shall be run in steel conduit, concealed in finished areas. Conduit 2" and smaller shall be EMT with compression fittings. Set screw type connectors are not allowed. Conduit larger than 2" shall be rigid, hot-dip galvanized steel (RGS) with screwed connectors and fittings.
   b. All conduit installed on building exterior, in wet locations, in crawl spaces, and on roofs shall be RGS with screwed connectors and fittings.
   c. Underground conduit shall be shall be Schedule 40 PVC or RGS double wrapped with 3M #35 electrical tape. Transition from PVC shall be made underground and all elbows to risers shall be RGS.

3 All flexible metal conduit to motors and in wet locations shall be liquid tight.

4 A separate ground conductor shall be run in each raceway.

B. ELECTRICAL CONDUCTORS

1. All wiring shall be in a raceway and shall be THHN or THWN copper conductors.
2. Minimum conductor size shall be #12.
3. Conductors # 10 and smaller shall be solid. #8 and larger shall be stranded.

4. Conductors shall be color coded as follows:
   a. For wire sizes 10 AWG and smaller, install wire colors in accordance with the following:
      1) Black, red, and blue for circuits at 120/208 volts single or three phase, wye systems.
      2) Purple, brown, and yellow for circuits at 277/480 volts single or three phase, wye systems.
      3) Black for "A" leg and red for "B" leg for circuits at 120/240 volts single phase.
      4) Black and red for the non-hi-leg phases and orange for the hi-leg phase for circuits at 120/240 volts three phase, open-delta.
      5) Three-way and four-way switch travelers shall be purple or lavender. Switch leg conductors shall be color coded different from the traveler conductors and the phase conductors of the system. The color used for switch leg conductors shall be the same throughout the project. The color used for traveler conductors shall be the same throughout the project.
   b. For wire sizes 8 AWG and larger, identify wire with colored tape at terminals, splices and boxes. Colors are as follows:
      1) Black, red, and blue for circuits at 120/208 volts single or three phase, wye system.
      2) Purple, brown, and yellow for circuits at 277/480 volts single or three phase, wye system.
      3) Black for "A" leg and red for "B" leg for circuits at 120/240 volts single phase.
      4) Black and red for the non-hi-leg phases and orange for the hi-leg phase for circuits at 120/240 volts three phase, open-delta.

   c. Neutral Conductors: White or gray per NEC. When two neutral conductors are routed in one conduit, install one white conductor and one gray conductor and identify each with the proper circuit number. When two or more neutrals are located in one conduit, individually identify each with proper circuit number, or use gray wire for one or more of the neutrals.

   d. Branch Circuit Conductors: Install three or four wire home runs with each phase uniquely color coded per Part A above.

   e. Feeder Circuit Conductors: Uniquely color code each phase per above.

   f. Ground Conductors:
      1) For 6 AWG and smaller: Green.
      2) For 4 AWG and larger: Identify with green tape at both ends and visible points including junction boxes.

   g. Acceptable manufacturers are: Diamond Wire & Cable Co., Essex Group Inc., and General Cable Co.

C. PANEL BOARDS

1. All panel boards shall utilize copper bus and shall include a ground bus. An isolated ground bus shall be installed where required.

2. All breakers shall be bolt-on type.

3. Interrupting current shall be as required for the installation. However, any service entrance panel shall not be rated less than 22,000 AIC. Full ratings shall be used instead of series rated.

4. Interior panel boards shall be NEMA 1 and exterior panel boards shall be NEMA 3R.

5. Acceptable manufacturers are: Square D, General Electric, and Cutler Hammer.

D. DISCONNECT SWITCHES

1. Disconnect switches shall be heavy-duty type and provided as required by NEC.

2. Interior disconnect switches shall be NEMA 1 and exterior shall be NEMA 3R.

3. Acceptable manufacturers are: Square D, General Electric, and Cutler Hammer.

TxDOT Maintenance Division
Facilities Management Section
Engineering Services Branch

Design Guide

Title:	**Emergency Generators**	**Number:**	**E1.03**
Issue Date:	**November 4, 2005**	**Rev #:**	**1**

Approved: _____
Engineering Services Supervisor

For Area Engineering and Maintenance Facilities and Maintenance Offices, an Emergency Generator shall be provided to serve essential loads.

The Emergency Generator shall be fueled by diesel or natural gas if it is available at the site.

The loads to be served by the Emergency Generator are:

- Lights and receptacles in the Reception area.
- Lights and receptacles in one set of rest rooms close to the Reception area.
- Lights, HVAC and receptacles in Telephone/Data room.
- Lights and receptacles in Electrical room.
- Lights, HVAC, and receptacles in Radio room.
- Fueling systems including gasoline, diesel, and propane.
- Essential Hallway lights to allow use of Reception area.

For the typical installation, the Emergency Generator should not be larger than 20 kW.

Any exceptions to this guide require approval by the Engineering Services Supervisor. All requests for exceptions and approvals must be in writing.

TxDOT Maintenance Division
Facilities Management Section
Engineering Services Branch

Design Guide

Title: **Lighting** **Number:** **E1.04**

Issue Date: **November 4, 2005** **Rev #:** **0**

Approved: _____
Engineering Services Supervisor

For Area Engineering and Maintenance Facilities and Maintenance Offices, the following lighting guidelines apply:

1. The following are suggested lighting levels (30 inches above floor) and may be revised as per consultant's recommendations:

Area	Foot-candle level
Office	50
Restroom	35
Chase	10
Shop General	30
Storage	20
Equipment Storage	10
Parking Areas	2

2. Lay-in fluorescent fixtures shall be prismatic lensed (0.125), specification grade fixtures with electronic ballasts and F32T8 lamps. Lithonia Type 2SP8 or equal.

3. Wall mounted restroom fixtures shall be Lithonia Type WP or equal with electronic ballasts and F32T8 lamps.

4. Exterior mounted wall pack fixtures shall be Lithonia Type TWH or equal with metal halide lamp. Color shall be coordinated with Architect.

5. Parking area and drive lights shall be Lithonia Type KSF or equal with metal halide lamp mounted on Lithonia Type RTS pole. Color shall be coordinated with Architect. In coastal and other corrosive environments, round tapered fiberglass poles shall be used.

6. Lighting for TxDOT sign shall be ground mounted Lithonia Type TFL or equal with metal halide lamp. Color shall be dark bronze.

7. The electronic ballasts shall have rapid start lamp ignition and incorporate electronic circuitry to cut off lamp cathode heat after lamps are ignited. The ballasts shall operate the lamps at 60 Hz and provide full rated 20,000-hour lamp life. The ballasts shall not contain secondary filament transformer. Line current total harmonic distortion shall not exceed ten percent. The lamp current crest factor shall not exceed 1.4. The minimum and maximum ballast factors shall be 0.85 and 0.925 respectively. For all ballasts, recommended manufacturers are Lithonia, Magnetek, Motorola, Advance, or approved equal.

8. Fluorescent lamps shall be F32T8 lamps. The lamps shall have a full rated 20,000-hour operating life. The operating temperature shall be 3500K with a color rendering index not less than 85. The lamps shall have an initial output of not less than 2,850 lumens.

9. Acceptable fixture manufacturers are: Lithonia, Columbia, General Electric, Hubbell, or approved equals.

Any exceptions to this guide require approval by the Engineering Services Supervisor. All requests for exceptions and approvals must be in writing.

TxDOT Maintenance Division
Facilities Management Section
Engineering Services Branch

Design Guide

Title:	**Gas Monitoring System**	**Number:**	**E1.05**
Issue Date:	**November 4, 2005**	**Rev #:**	**0**

Approved: _____
Engineering Services Supervisor

For Area Engineering and Maintenance Facilities and Maintenance Offices, the following gas monitoring guidelines apply:

A. A Gas Monitoring System (GMS) shall be provided in the vehicle maintenance shop only. Storage areas do not have a GMS.

B. The GMS shall operate as stand alone system(s). The monitors shall be engineered to continuously monitor for the presence of propane gas. When gas concentration surpasses the preset limit in any sensor module in a zone, audible alarm indication and relays shall be activated for that particular zone. Sensor reaction shall be instantaneous; however alarms shall be capable of being delayed dependent on user preference, and dedicated flashing warning lights for visual indication and low mounted side wall exhaust fans for propane gas evacuation shall be immediately activated.

C. GMS shall be installed in accordance with manufacturer's instructions, NFPA 58, local codes, the National Electric Code (NEC) and the engineering Drawing.

D. Monitor – Bottom of monitor panel shall be mounted on wall 48" above floor.

E. Sensors – Shall be mounted on wall 18" above floor. All wiring shall be run in conduit with no exposed wiring.

F. Strobe Warning Light – Shall be mounted on wall 10 feet above floor. All wiring shall be run in conduit with no exposed wiring.

G. Alarm Annunciators – Shall be mounted on wall 10 feet above floor (or just below ceiling in office areas). All wiring shall be run in conduit with no exposed wiring.

H. Side wall exhaust fans shall be wired into the GMS and set to activate set upon detection of LP gas. .

I. Acceptable manufacturers: Armstrong Monitoring Corporation, BW Technologies, Enmet Corporation, Thermo Gas Tech, Rel-Tek Corporation , or approved equal.

Any exceptions to this guide require approval by the Engineering Services Supervisor. All requests for exceptions and approvals must be in writing.

Texas Department of Transportation

PART – 4

ENERGY CONSERVATION STANDARDS

Texas Department of Transportation

PART 4 Contract No.

TxDOT
PROVISION
For
ENERGY CONSERVATION STANDARDS

(REVISED AUGUST 2004)

A. DESIGN STANDARDS

Use of ASHRAE/IESNA Standard 90.1-2001 is required for all facility construction and/or major renovation. The Architect and Engineers responsible for the project must certify (requires a Architect or Engineers seal) compliance of the project with ASHRAE/IESNA Standard 90.1-2001.

All drawings and specifications shall be reviewed and approved by MNT Facility Management Branch Energy Group prior to release for bidding. The attached forms, after completion, or forms substantially the same, shall be forwarded to the Energy Group for approval.

The Energy Group will certify to the State Energy Conservation Office that the project is compliance with Texas Energy Conservation Code.

B. INCLUDED FORMS:

1. Building Envelope Compliance Documentation
2. HVAC Simplified Approach Option
3. HVAC Mandatory Provisions
4. HVAC Prescriptive Requirements
5. Service Water Heating Compliance Documentation
6. Lighting Compliance Documentation
7. Energy Cost Budget (ECB) Compliance Report

Lighting Compliance Documentation

Project Name:	
Project Address:	Date:
Designer of Record:	Telephone:
Contact Person:	Telephone:
City:	

Mandatory Provisions Checklist

- ❑ Automatic lighting shutoff controls are provided based on either a scheduling device or an occupant sensor
  - ❑ Exception: Space is intended for 24-hour operation
  - ❑ Exception: Space is smaller than 5000 ft²
- ❑ Each space enclosed by ceiling-height partitions has an independent, accessible control that operates general lighting in the space
  - ❑ Exception: The control is located in a remote location for safety or security reasons
- ❑ For spaces less than or equal to 10,000 ft², a separate space control is provided for each 2500 ft² of area
- ❑ For spaces more than 10,000 ft², a separate space control is provided for each 10,000 ft² of area
- ❑ Either a photosensor or an astronomical time switch controls exterior lighting applications
  - ❑ Exception: Lights must remain on for safety, security or eye adaptation reasons
- ❑ Two-lamp tandem-wired ballasts
- ❑ Display lighting has a separate control
- ❑ Case lighting has a separate control
- ❑ Hotel/motel guest rooms have a master switch at the main entry
- ❑ Task lighting has a separate control
- ❑ Nonvisual lighting has a separate control
- ❑ Demonstration lighting has a separate control
- ❑ Exit signs larger than 20 W have an efficacy greater than or equal to 35 lumens/W
- ❑ Exterior luminaires greater than 100 W have lamps with minimum efficacy of 60 lumens/W
  - ❑ Exception: Luminaire is activated with a motion sensor

Interior Lighting Power Allowance (Building Area Method)

Building Type	Lighting Power Density (W/ft²)	Building Area (ft²)	Lighting Power Allowance (W)
		Total	

Interior Lighting Power Allowance (Space-by-Space Method)

Building Type	Common/Specific Space Type	Lighting Power Density (W/ft²)	Space Area (ft²)	Lighting Power Allowance (W)
			Total	

Lighting Compliance Documentation

Project Name:	
Contact Person:	Telephone:

Interior Connected Lighting Power

ID	Luminaire Description (including number of lamps per fixture, watts per lamp, type of ballast, type of fixture)	Type: Incandescent	Fluorescent	HID	Line-Voltage Track	Low-Voltage Track	Other	Number of Luminaires	Watts/ Luminaire	Total Watts
		○	○	○	○	○	○			
		○	○	○	○	○	○			
		○	○	○	○	○	○			
		○	○	○	○	○	○			
		○	○	○	○	○	○			
		○	○	○	○	○	○			
		○	○	○	○	○	○			
		○	○	○	○	○	○			
		○	○	○	○	○	○			
		○	○	○	○	○	○			
									Total	

Additional Interior Lighting Power Allowance

Space ID	Space Name	Type: Decorative	VDT's	Display Lighting	Area (ft²)	Unit Allowance (W/ft²)	Allowance (W)	Luminaire ID's	Installed Power (W)
		○	○	○					
		○	○	○					
		○	○	○					
		○	○	○					
		○	○	○					
		○	○	○					
		○	○	○					
		○	○	○					

Lighting Compliance Documentation

Project Name:	
Contact Person:	Telephone:

Additional Interior Connected Lighting Power

ID	Luminaire Description (including number of lamps per fixture, watts per lamp, type of ballast, type of fixture)	Type						Number of Luminaires	Watts/ Luminaire	Total Watts
		Incandescent	Fluorescent	HID	Line-Voltage Track	Low-Voltage Track	Other			
		○	○	○	○	○	○			
		○	○	○	○	○	○			
		○	○	○	○	○	○			
		○	○	○	○	○	○			
		○	○	○	○	○	○			
		○	○	○	○	○	○			
		○	○	○	○	○	○			
		○	○	○	○	○	○			
		○	○	○	○	○	○			
		○	○	○	○	○	○			
									Total	

Exterior Building Lighting Power Allowance

Application	Allowance	Area or Length (ft² or ft)	Total Watts
Building entrance with canopy or free standing	3 W/ft^2 of canopied area		
Building entrance without canopy	33 W/lin ft of door width		
Building exit	20 W/lin ft of door width		
Building façades	0.25 W/ft^2 of illuminated façade area		
		Total	

Exterior Connected Lighting Power

ID	Luminaire Description (including number of lamps per fixture, watts per lamp, type of ballast, type of fixture)	Number of Luminaires	Watts/ Luminaire	Total Watts
			Total	

Building Envelope Compliance Documentation Part I

Project Name:			
Project Address:			Date:
Designer of Record:			Telephone:
Contact Person:			Telephone:
City:	HDD65:	CDD50:	Criteria Table:

Mandatory Provisions Checklist

Insulation (§ 5.2.1)

- ❑ Insulation Materials are installed in accordance with manufacturer's recommendations and in such a manner as to achieve rated *R*-value of insulation
  - ❑ Exception: for metal building roofs or metal building walls.
- ❑ Loose-fill insulation is not used in attic roof spaces when the slope of the ceiling is more than three in twelve.
- ❑ Attic eave vents have baffling to deflect the incoming air above the surface of the insulation.
- ❑ Insulation is installed in a permanent manner in substantial contact with the inside surface.
- ❑ Batt insulation installed in floor cavities is supported in a permanent manner by supports no greater than 24 in. o.c.
- ❑ Lighting fixtures; HVAC; and other equipment are not be recessed in ceilings in such a manner to affect the insulation thickness unless.

Exceptions:

- ❑ The recessed area is less than one percent
- ❑ The entire roof, wall, or floor is covered with insulation to the full depth required
- ❑ The effects of reduced insulation are included in calculations using an area weighted averages

- ❑ Roof insulation is not installed over suspended ceiling with removable ceiling panels.
- ❑ Exterior insulation is covered with a protective material to prevent damage. Insulation is protected in attics and mechanical rooms where access is needed. .
- ❑ Foundation vents do not interfere with the insulation.
- ❑ Insulation materials in ground contact have a water absorption rate no greater than 0.3 percent.

Fenestration and Doors (§ 5.2.2)

- ❑ *U*-factors are determined in accordance with NFRC 100. *U*-factors for skylights shall be determined for a slope of 20° above the horizontal.

Exceptions:

- ❑ *U*-factors are taken from A.8.1 for glazed wall systems in vertical fenestration and/or skylights.
- ❑ *U*-factors are taken from A.8.2 other fenestration products
- ❑ *U*-factors are taken from A.7 for opaque doors
- ❑ *U*-factors are derived from NAGDM 105 for garage doors.

- ❑ Solar heat gain coefficient (SHGC) is determined in accordance with NFRC 200.

Exceptions:

- ❑ SHGC is determined by multiplying the shading coefficient (SC) by 0.86. Shading coefficient is determined using a spectral data file determined in accordance with NFRC 300.
- ❑ SHGC for the center of glass is used. SHGC is determined using a spectral data file determined in accordance with NFRC 300.
- ❑ SHGC is taken from A.8.1 for glazed wall systems in vertical fenestration and skylights.

- ❑ Visible light transmittance is determined in accordance with NFRC 200.

Air Leakage (§ 5.2.3)

- ❑ The *building envelope* is sealed, caulked, gasketed, and/or weather-stripped to minimize air leakage
- ❑ Air leakage through fenestration and doors is less than 0.4 cfm/ft² (1.0 cfm/ft² for glazed swinging entrance doors and for revolving doors) when tested in accordance with NFRC 400.

Exceptions:

- ❑ Field fabricated fenestration and doors
- ❑ For garage *doors* tested in accordance with NAGDM 105

- ❑ Cargo doors and loading dock doors are equipped with weatherseals in climates with more than 3,600 HDD65
- ❑ Entrance doors have vestibules

Exceptions:

- ❑ Climates has less than 1800 HDD65
- ❑ Building is less than four stories
- ❑ Doors not intended as building entrance
- ❑ Doors open from dwelling unit(s)
- ❑ Doors open from spaces smaller than 3,000 ft²
- ❑ Building has revolving doors
- ❑ Doors for vehicular movement or material handling

Building Envelope Compliance Documentation

Project Name:						
Contact Person:						Telephone:
Space Category	5.3.2.3 Exceptions	Window-Wall Ratio	Total	North (Opt.)	Other (Opt.)	Skylight-Roof Ratio
Nonresidential	☐ North Oriented	Gross Wall Area (ft^2):				Gross Roof Area (ft^2):
Residential	☐ Overhangs	Window Area (ft^2):				Skylight Area:
Semi-Heated	☐ Street Level Windows	Window-Wall Ratio:				Skylight-Roof Ratio

Opaque Surfaces

Description/ Name	Class (Pick one)															Pick one		Pick one			Proposed Insulation *R*-value, U-factor, *C*-factor, or *F*-factor	Criteria Insulation *R*-value, U-factor, *C*-factor, or *F*-factor	Surface Area (ft^2) (optional)
	Roof			Wall					Floor			Slab		Door									
	Insulation Above Deck	Metal Building	Attic and Other	Mass	Metal Building	Steel Framed	Wood Framed / Other	Below-Grade Wall	Mass	Steel Joist	Wood Framed / Other	Unheated	Heated	Swinging	Non-Swinging	*R*-value Option	*U*-factor Option	Appendix A Defaults	Calculations	High Reflectance/Emittance Roof			
	○	○	○	○	○	○	○	○	○	○	○	○	○	○	○	○	○	○	○	☐			
	○	○	○	○	○	○	○	○	○	○	○	○	○	○	○	○	○	○	○	☐			
	○	○	○	○	○	○	○	○	○	○	○	○	○	○	○	○	○	○	○	☐			
	○	○	○	○	○	○	○	○	○	○	○	○	○	○	○	○	○	○	○	☐			
	○	○	○	○	○	○	○	○	○	○	○	○	○	○	○	○	○	○	○	☐			
	○	○	○	○	○	○	○	○	○	○	○	○	○	○	○	○	○	○	○	☐			
	○	○	○	○	○	○	○	○	○	○	○	○	○	○	○	○	○	○	○	☐			
	○	○	○	○	○	○	○	○	○	○	○	○	○	○	○	○	○	○	○	☐			
	○	○	○	○	○	○	○	○	○	○	○	○	○	○	○	○	○	○	○	☐			
	○	○	○	○	○	○	○	○	○	○	○	○	○	○	○	○	○	○	○	☐			
	○	○	○	○	○	○	○	○	○	○	○	○	○	○	○	○	○	○	○	☐			
	○	○	○	○	○	○	○	○	○	○	○	○	○	○	○	○	○	○	○	☐			
	○	○	○	○	○	○	○	○	○	○	○	○	○	○	○	○	○	○	○	☐			
	○	○	○	○	○	○	○	○	○	○	○	○	○	○	○	○	○	○	○	☐			
	○	○	○	○	○	○	○	○	○	○	○	○	○	○	○	○	○	○	○	☐			
	○	○	○	○	○	○	○	○	○	○	○	○	○	○	○	○	○	○	○	☐			
	○	○	○	○	○	○	○	○	○	○	○	○	○	○	○	○	○	○	○	☐			
	○	○	○	○	○	○	○	○	○	○	○	○	○	○	○	○	○	○	○	☐			
	○	○	○	○	○	○	○	○	○	○	○	○	○	○	○	○	○	○	○	☐			
	○	○	○	○	○	○	○	○	○	○	○	○	○	○	○	○	○	○	○	☐			
	○	○	○	○	○	○	○	○	○	○	○	○	○	○	○	○	○	○	○	☐			
	○	○	○	○	○	○	○	○	○	○	○	○	○	○	○	○	○	○	○	☐			
	○	○	○	○	○	○	○	○	○	○	○	○	○	○	○	○	○	○	○	☐			
	○	○	○	○	○	○	○	○	○	○	○	○	○	○	○	○	○	○	○	☐			
	○	○	○	○	○	○	○	○	○	○	○	○	○	○	○	○	○	○	○	☐			
	○	○	○	○	○	○	○	○	○	○	○	○	○	○	○	○	○	○	○	☐			
	○	○	○	○	○	○	○	○	○	○	○	○	○	○	○	○	○	○	○	☐			
	○	○	○	○	○	○	○	○	○	○	○	○	○	○	○	○	○	○	○	☐			
	○	○	○	○	○	○	○	○	○	○	○	○	○	○	○	○	○	○	○	☐			
	○	○	○	○	○	○	○	○	○	○	○	○	○	○	○	○	○	○	○	☐			

Building Envelope Compliance Documentation

Project Name:	
Contact Person:	Telephone:

Fenestration

Description/ Name	Class (Pick one)								Proposed Fenestration							Criteria	
	Window, North, Operable	Window, North, Fixed	Window, Other, Operable	Window, Other, Fixed	Skylight, Curb, Glass	Skylight, Curb, Plastic	Skylight, No Curb	NFRC Rating Appendix A Defaults	Area	*U*-factor	Solar Heat Gain Coefficient (SHGC)	Overhang	Projection Factor	Overhang Multiplier	Adjusted Solar Heat Gain Coefficient (SHGC)	*U*-factor	Solar Heat Gain Coefficient (SHGC)
	○	○	○	○	○	○	○	○ ○				☐					
	○	○	○	○	○	○	○	○ ○				☐					
	○	○	○	○	○	○	○	○ ○				☐					
	○	○	○	○	○	○	○	○ ○				☐					
	○	○	○	○	○	○	○	○ ○				☐					
	○	○	○	○	○	○	○	○ ○				☐					
	○	○	○	○	○	○	○	○ ○				☐					
	○	○	○	○	○	○	○	○ ○				☐					
	○	○	○	○	○	○	○	○ ○				☐					
	○	○	○	○	○	○	○	○ ○				☐					
	○	○	○	○	○	○	○	○ ○				☐					
	○	○	○	○	○	○	○	○ ○				☐					
	○	○	○	○	○	○	○	○ ○				☐					
	○	○	○	○	○	○	○	○ ○				☐					
	○	○	○	○	○	○	○	○ ○				☐					
	○	○	○	○	○	○	○	○ ○				☐					
	○	○	○	○	○	○	○	○ ○				☐					
	○	○	○	○	○	○	○	○ ○				☐					
	○	○	○	○	○	○	○	○ ○				☐					
	○	○	○	○	○	○	○	○ ○				☐					
	○	○	○	○	○	○	○	○ ○				☐					
	○	○	○	○	○	○	○	○ ○				☐					
	○	○	○	○	○	○	○	○ ○				☐					
	○	○	○	○	○	○	○	○ ○				☐					
	○	○	○	○	○	○	○	○ ○				☐					
	○	○	○	○	○	○	○	○ ○				☐					
	○	○	○	○	○	○	○	○ ○				☐					
	○	○	○	○	○	○	○	○ ○				☐					
	○	○	○	○	○	○	○	○ ○				☐					
	○	○	○	○	○	○	○	○ ○				☐					
	○	○	○	○	○	○	○	○ ○				☐					
	○	○	○	○	○	○	○	○ ○				☐					

HVAC Simplified Approach Option

Part I

Project Name:	
Project Address:	Date:
City:	Zip:
HVAC System Designer of Record:	Telephone:
Contact Person:	Telephone:

Qualification

- ☐ The building is 2 stories or less in height and has a gross floor area is less than 25,000 ft^2.

Requirements

- ☐ (a) All systems serve a single HVAC zone.
- ☐ (b) Cooling (if any) is provided by a unitary packaged or split-system air conditioner that is either air-cooled or evaporatively cooled and meets the efficiency requirements shown in Table 6.2.1. List equipment in the table below.
- ☐ (c) The system has an air economizer as required by Table 6.3.1, with controls as required in Tables 6.3.1.1.3A and 6.3.1.1.3B. The economizer has either barometric or powered relief sized to prevent overpressurization of the building. Outside air dampers for the economizer use are provided with blade and jamb seals.
  - ☐ Exception: The cooling efficiency meets or exceeds the efficiency requirement in Table 6.1.3. Document in table below.
- ☐ (d) Heating (if any) shall be provided by a unitary packaged or split-system heat pump, a fuel-fired furnace, an electric resistance heater or a baseboard system connected to a boiler. All heating equipment meets the efficiency requirements of the Standard. List equipment in table below.
- ☐ (e) The outside air quantity is less than or equal to 3000 cfm and less than or 70% of the supply air quantity at minimum outside air design conditions.
  - ☐ Exception: An energy recovery ventilation system is provided in accordance with the requirements in § 6.3.6.
- ☐ (f) The system shall be controlled by a manual changeover or dual set-point thermostat.
- ☐ (g) Heat pumps equipped with auxiliary internal electric resistance heaters (if any) have controls to prevent supplemental heater operation when the heating load can be met by the heat pump alone.
- ☐ (h) The system controls do not permit reheat or any other form of simultaneous heating and cooling for humidity control.
- ☐ (i) Systems are provided with a time clock that (1) can start and stop the system under different schedules for seven different day-types per week; (2) is capable of retaining programming and time setting during a loss of power for a period of at least 10 h; (3) includes an accessible manual override that allows temporary operation of the system for up to 2 h; (4) is capable of temperature setback down to 55°F during off hours; and (5) is capable of temperature setup to 90°F during off hours.
  - ☐ Exception: System serves hotel/motel guest rooms.
  - ☐ Exception: System operates continuously.
  - ☐ Exception: System has a cooling or heating capacity less than 65,000 Btu/h and a supply fan motor power greater than 3/4 hp.
- ☐ (j) Piping is insulated in accordance with Table 6.2.4.5 .Insulation exposed to weather is suitable for outdoor service. Cellular foam insulation is protected from water and solar radiation.
  - ☐ Exception: Piping is located within manufactured HVAC units.
- ☐ (k) Ductwork and plenums are insulated in accordance with Tables 6.2.4.2A and 6.2.4.2B and sealed in accordance with Table 6.2.4.3A.
- ☐ (l) Construction documents require air systems to be balanced in accordance with industry accepted procedures to within 10% of design airflow rates.
- ☐ (m) Where separate heating and cooling equipment serve the same temperature zone, thermostats are interlocked to prevent simultaneous heating and cooling.
- ☐ (n) Exhausts are equipped with gravity or motorized dampers that will automatically shut when systems are not in use.
  - ☐ Exception: Design capacity is less than 300 cfm.
  - ☐ Exception: System operates continuously.
- ☐ (o) Systems have optimum start controls.
  - ☐ Exception: Supply air capacity is less than 10,000 cfm.

Equipment Efficiency

System Tag(s)	Mfg. & Model No.	Equip.Type	Heating			Cooling			
			Rated Capacity	Rated Efficiency	Minimum Efficiency	Rated Capacity	Rated Efficiency	Minimum Efficiency	Econ. Min. Efficiency

HVAC Mandatory Provisions

Project Name:				
Project Address:			Date:	
HVAC System Designer of Record:			Telephone:	
Contact Person:			Telephone:	
City:	CDD50:	HDD65:	No. Hours 8am-4pm 55<Tdb<69:	
Zip:	1% Summer DB Temp:	1% Summer WB Temp:	Climate Type (Tbl 6.3.1.1.3A):	99.6% Winter Temp:

Mandatory Equipment Efficiency Worksheet (§6.2.1)

System Tag	Equipment Type (Tables 6.2.1 A through G)	Size Category (Tables 6.2.1 A through G)	Sub-Category or Rating Condition (Tables 6.2.1 A through G)	Units of Efficiency (Tables 6.2.1 A through G)	Minimum Efficiency (Tables 6.2.1 A through G) Rated ≤ Required
					≤
					≤
					≤
					≤
					≤
					≤
					≤

Mandatory Non-Standard Centrifugal Chiller Worksheet (§6.2.1)

System Tag	Leaving CHW Temperature (°F)	Entering CW Temperature (°F)	Condenser Flow Rate (gpm/ton)	Size Category (Tables 6.2.1 H through J)	Minimum Efficiency (Tables 6.2.1 H through J) Rated ≤ Required
					≤
					≤
					≤
					≤

General Mandatory Requirements

- ☐ Load calculations are provided for selection of all equipment and systems (§6.2.2).
- ☐ Stair vents, elevator shaft vents, gravity hoods, gravity vents and gravity ventilations are provided with motorized dampers.
  - ☐ Exception: Gravity dampers are used since the building is less than 3 stories or in a climate with <2700 HDD65.
  - ☐ Exception: No vents are required as these systems ventilate unconditioned zones.
- ☐ Piping insulation meets or exceeds the requirements of the Standard (§6.2.4.5).
- ☐ Construction documents require record drawings (§6.2.5.1), manuals (§6.2.5.2), system balancing (§6.2.5.3) and system commissioning (§6.2.5.4).

Special Mandatory Requirements

- ☐ Freeze protection or snow/ice melting systems (if any) have controls to prevent operation in warm weather (§6.2.3.8).
- ☐ Independent perimeter heating systems (if any) comply with the control requirements of §6.2.3.1.1 and §6.2.3.1.3.
- ☐ Independent heating and cooling thermostatic controls (if any) are interlocked to prevent crossover of set points (§6.2.3.1.3).

Project Name:	
Contact Person:	Telephone:

Systems Worksheet (§6.2)

System Tag						
Supply CFM						
Supply ESP (in. w.c.)						
Fan System HP						
OSA CFM						
Automatic Shutdown (§6.2.3.2.1)						
Deadband (§6.2.3.1.2)						
Setback Controls (§6.2.3.2.2)						
Setup Controls (§6.2.3.2.2)						
Optimum Start (§6.2.3.2.3)						
Shutoff Dampers (§6.2.3.2.4)						
Zone Isolation (§6.2.3.2.5)						
Heat Pump Aux Heat (§6.2.3.4)						
Humidifier Preheat (§6.2.3.6)						
Humidification/Dehumidification Deadband (§6.2.3.7)						
Ventilation Control (§6.2.3.9)						
Duct/Plenum Insulation (§6.2.4.2)						
Duct Sealing Levels (§6.2.4.3) Supply/Return						
Duct Leakage Test (§6.2.4.4)						

In the table above, enter the appropriate codes from this list:

Shutdown
- *C1 Complying time clock with override*
- *N1 N/A Continuous operation*
- *N2 N/A ≤65 kbtu/h or ≤3/4 hp*
- *N3 N/A Hotel/Motel Guestroom*

Dead Band
- *C1 Dual Setpoint Control*
- *C2 Manual Change Over Control*
- *N1 N/A Special Occupancy (requires approval)*
- *N2 N/A Heating or cooling only*

Setback Controls
- *C1 Setback Provided (down to 55F)*
- *N1 N/A Continuous operation*
- *N2 N/A ≤65 kbtu/h or ≤3/4 hp*
- *N3 N/A 99.6% Win DB>40F*
- *N4 N/A Radiant Heating*
- *N5 N/A No heating*

Setup Controls
- *C1 Setup Provided (up to 90F)*
- *N1 N/A Continuous operation*
- *N2 N/A ≤65 kbtu/h or ≤3/4 hp*
- *N3 N/A 1% Sum DB<=100F*
- *N4 N/A No cooling*

Optimum Start
- *C1 Optimum start provided*
- *N1 N/A Continuous operation*
- *N2 N/A ≤65 kbtu/h or ≤3/4 hp*
- *N3 N/A Supply<=10,000 cfm*

Shutoff Dampers
- *C1 Motorized shutoff dampers on OA and Exh*
- *C2 Gravity shutoff dampers on OA and Exh*
- *N1 N/A Continuous operation*
- *N2 N/A ≤65 kbtu/h or ≤3/4 hp*
- *N3 N/A OA/EA <=300 cfm*

Zone Isolation
- *C1 Isolation zones provided*
- *N1 N/A Continuous operation*
- *N2 N/A ≤65 kbtu/h or ≤3/4 hp*
- *N3 N/A All zones on same schedule*
- *N4 N/A OA/EA <=5,000 cfm*

Heat Pump Aux Heat
- *C1 Complying controls provided*
- *N1 N/A System is not a heat pump*
- *N2 N/A Auxiliary is not electriC1 or is not provided*
- *N3 N/A Heat pump covered by NAECA*

Humidifier Preheat
- *C1 Complying controls provided*
- *N1 N/A no humidifier*

Humidification/Dehumidification Dead Band
- *C1 Complying controls provided*
- *N1 N/A no humidification and/or dehumidification*

Duct/Plenum Insulation
- *C1 Complying insulation provided*
- *N1 N/A all ducts located in conditioned space*

Duct Sealing
- *Enter highest seal level (A, B or C) for supply and return*

Duct Leakage Test
- *Y Ducts will be tested for leakage*
- *N Ducts will not be tested for leakage*

❑

Project Name:	
Contact Person:	Telephone:

Prescriptive Checklist

Prescriptive Economizers (§6.3.1)

- ❑ Systems employ airside economizers (§6.3.1.1).
- ❑ Economizer provides up to 100% design air flow in outside air (§6.3.1.1.1).
- ❑ Economizer is integrated with the mechanical cooling system (§6.3.1.1.2 and §6.3.1.3).
- ❑ Economizer high limit shutoff complies with §6.3.1.1.3.
- ❑ Economizer dampers meet or exceed leakage requirements (§6.3.1.1.4).
- ❑ System provides relief for up to 100% design airflow in outside air (§6.3.1.1.5).
- ❑ Economizer complies with the heating system impact requirements (§6.3.1.4).
- ❑ Systems employ waterside economizers.
- ❑ Economizer can provide 100% of the load at either the outdoor conditions of 50°F db/45°F wb or 45°F db/40°F wb where required for dehumidification purposes (§6.3.1.2.1).
- ❑ Precooling coils and heat exchangers have either a ≤ 15 ft of WC pressure drop or are bypassed when economizer is not in use (§6.3.1.2.2).
- ❑ Economizer is integrated with the mechanical cooling system (§6.3.1.3).
- ❑ Economizer complies with the heating system impact requirements (§6.3.1.4).
- ❑ Systems are exempt from the economizer requirements.

Specify economizer exemptions:_____

_____

_____

_____

Prescriptive Air-System Requirements

- ❑ Simultaneous Heating and Cooling (§6.3.2.3).
- ❑ Zone minimums were set to meet the requirements of Standard 62.
- ❑ Zone minimums were set to ≤0.4 cfm/ft^2 of zone conditioned floor area.
- ❑ Zone minimums are less than 300 cfm.
- ❑ Other (requires special documentation and approval).
- ❑ Humidity controls (if any) comply with the requirements of §6.3.2.3.
- ❑ Systems that employ hydronic cooling and have humidification (if any) use a waterside economizer that complies with §6.3.1.
- ❑ Variable air volume fan controls comply with the requirements of §6.3.3.2.

Prescriptive Water-System Requirements

- ❑ Three-pipe systems are not used (§6.3.2.2.1).
- ❑ Two-pipe changeover heating/cooling systems (if any) comply with the requirements of §6.3.2.2.2.
- ❑ Hydronic (ground- or water-loop) heat pump systems that have equipment for both loop heat addition and loop heat rejection (if any) comply with the requirements of §6.3.2.2.3.
- ❑ System pumps greater than 10 hp employ variable flow controls (§6.3.4.1), pump isolation (§6.3.4.2) and temperature reset (§6.3.4.3).

Prescriptive Special System Requirements

- ❑ All heat rejection equipment with motors ≥ 7.5 hp employ controls that comply with §6.3.5.
- ❑ Exhaust Air Energy Recovery: all fan systems that have both a design supply capacity of ≥ 5000 cfm and a minimum outdoor air supply of ≥ 70% of the design supply air employ an energy recovery system that complies with §6.3.6.1.
- ❑ Heat recovery for service water heating is provided for facilities that operate continuously, have a total water-cooled heat rejection capacity exceeding 6,000,000 btu/h, and have a design service water heating load exceeding 1,000,000 btu/h. The heat recovery system (if any) complies with §6.3.6.2.
- ❑ Kitchen hoods with exhaust flows > 5000 cfm comply with the requirements of §6.3.7.1.
- ❑ Fume hoods with a total exhaust system flow > 15,000 cfm comply with the requirements of §6.3.7.2.
- ❑ Radiant heaters complying with §6.3.8.1 are used to heat unenclosed spaces (if any).
- ❑ The cooling equipment with hot-gas bypass controls (if any) meets the unloading requirements of §6.3.9.

Project Name:	
Contact Person:	Telephone:

Complete one worksheet for each fan system > 5hp

Prescriptive Fan Power Limitations (§6.3.3.1)

Supply Fan			Return Fan		Exhaust Fan		Series-Style Fan-Powered Box		Total System Motor (hp)
Tag	Supply CFM	Motor (hp)	Tag	Motor (hp)	Tag	Motor (hp)	Tag	Motor (hp)	
	←Total Supply CFM							Total System Motor HP →	

Table 6.3.3.1 Value		_____	hp/cfm		
Total Supply CFM	X	_____	cfm		
Constant	÷	1,000			
HP Allowance	=	_____	hp (=Value X CFM/1000)	≥	_____
Adjusted HP Allowance*		_____	hp (see §6.3.3.1)	≥	_____

Credits and/or adjustments* ➔

* Attach calculations and documentation if credits or temperature adjustments are used. Refer to §6.3.3.1 for the formulas

Credits and adjustments are available for the following:

- *Clean filter pressure drops in excess of 1 in. w.c.;*
- *Pressure drop due to heat recovery coils or devices or evaporative cooling equipment or devices;*
- *Relief fans that operate during peak cooling due to high ventilation rates; and*
- *Room to cooling air supply temperature differences that are greater than 20°F (e.g. low temperature supply).*

Service Water Heating Compliance Documentation

Project Name:	
Project Address:	Date:
Designer of Record:	Telephone:
Contact Person:	Telephone:
City:	

Mandatory Provisions Checklist

- ❑ Load calculations have been provided for sizing of systems and equipment (§7.2.1).
- ❑ Equipment efficiencies meet or exceed the requirements of Table 7.2.2 (§7.2.2).
- ❑ Circulating systems are fully insulated (per Table 6.2.4.5) and have automatic pump controls (§7.2.3 & §7.2.4.2).
- ❑ Non-circulating systems have insulated heat traps and outlet piping insulated (per Table 6.2.4.5) for 8' from the storage tank (§7.2.6).
- ❑ Tanks with remote heaters have circulation pump controls (§7.2.4.4).
- ❑ All water heating systems have temperature controls that are adjustable down to 120°F or lower (§7.2.4.1).
- ❑ Systems designed with pipe heating systems such as heat trace have temperature or time controls (§7.2.4.2).
- ❑ Public lavatories have outlet temperature controls that limit the discharge temperature to 110°F (§7.2.4.3).
- ❑ Pool heaters have readily accessible controls and gas-fired heaters do not have standing pilot lights (§7.2.5.1).
- ❑ Heated swimming pools have vapor retardant covers (§7.2.5.2).
- ❑ Pool heaters and circulation pumps have time switches (§7.2.5.3).

Equipment Efficiency Worksheet (§7.2.1)

System Tag	Equipment Type (From Table 7.2.2)	Sub-Category or Rating Condition (From Table 7.2.2)	Input Rating (Btu/h or kW)	Volume (gal)	Energy Factor or Et		Standby Loss	
					Rated	≤ Required	Rated	≤ Required
						≤		≤
						≤		≤
						≤		≤
						≤		≤

Combination Space and Water Heating Worksheet (§7.3.1)

System Tag	Standby Loss Method			or Energy Use Exception (attach calculations			or Size Exception		
	Equipment	≤	Requirement	Equipment	≤	Requirement	Equipment	≤	Requirement
		≤			≤			≤	150,000 Btu/h
		≤			≤			≤	150,000 Btu/h
		≤			≤			≤	150,000 Btu/h
		≤			≤			≤	150,000 Btu/h

Energy Cost Budget (ECB) Compliance

Project Name:	
Contact Person:	Telephone:

Energy Summary by End Use

End Use	Energy Type	Proposed Building		Budget Building		Proposed / Budget Energy (%)
		Energy (10^3 Btu/h)	Peak (10^3 Btu/h)	Energy (10^3 Btu/h)	Peak (10^3 Btu/h)	
Lighting - conditioned						
Lighting - unconditioned						
Space heating (1)						
Space heating (2)						
Space cooling						
Pumps						
Heat rejection						
Fans - interior ventilation						
Fans - interior exhaust						
Fans - parking garage						
Service water heating						
Office equipment						
Elevators & escalators						
Refrigeration (food, etc.)						
Cooking (commercial)						
Total Building Consumption						

Energy Summary by End Use

	Proposed Buidling		Budget Building		Proposed / Budget	
	Energy (10^3 Btu/h)	Cost ($/ft²)	Energy (10^3 Btu/h)	Cost ($/ft²)	Energy (%)	Cost (%)
Electricity						
Natural gas						
Other fossil fuel						
District steam						
Total Nonsolar						
Solar or site recovered						
Total Including Solar						

* These results use assumptions for showing compliance during a typical year; actual energy costs may be substantially different.

Energy Cost Budget (ECB) Compliance Report

Project Name:	
Project Address:	Date:
Designer of Record:	Telephone:
Contact Person:	Telephone:
City:	Principal Heating Source: ☐ Fossil Fuel ☐ Electricity ☐ Solar/Site Recovered ☐ Other
Weather Data:	

Space Summary

Building Use	Conditioned Area (ft²)	Unconditioned (ft²)	Total
Total			

Advisory Messages

	Proposed Building Design	Budget Building	Difference Proposed – Budget
Number of hours heating loads not met (system/plant)			
Number of hours cooling loads not met (system/plant)			
Number of warnings			
Number of errors			
Number of defaults overridden			

Compliance Result

The design detailed in the above referenced plans complies with the mandatory requirements of the ASHRAE 90.1-1999 Standard and the Design Energy Cost does not exceed the Energy Cost Budget. Therefore this design **DOES COMPLY** with the ASHRAE 90.1-1999 ECB Compliance Methodology.

Individual certifying authenticity of the data provided in this analysis:

Signature	Title:

ATTACHMENT H
CHILD SUPPORT STATEMENT FOR THE TEXAS DEPARTMENT OF TRANSPORTATION

FOR NEGOTIATED CONTRACTS AND GRANTS

Under Family Code, Section 231.006, _____ *(name of individual*) certifies that _____ (*name of business*) _____ (*vendor #)* as of ___ _____, 20___ (*date*) is eligible to receive a grant, loan, or payment and acknowledges that any contract may be terminated and payment may be withheld if this certification is inaccurate.

List below the name and social security number of the individual or sole proprietor and each partner, shareholder, or owner with an ownership interest of at least 25% of the business entity submitting the bid or application. This form must be updated whenever any party obtains a 25% ownership interest in the business entity.

Name (Please Print Legibly)	***Social Security Number***

Family Code, Section 231.006, specifies that a child support obligor who is more than thirty (30) days delinquent in paying child support and a business entity in which the obligor is a sole proprietor, partner, shareholder, or owner with an ownership interest of at least 25% percent is not ineligible to receive payments from state funds under a contract to provide property, materials, or services; or receive a state-funded grant or loan.

A child support obligor or business entity ineligible to receive payments described above remains ineligible until all arrearage has been paid or the obligor is in compliance with a written repayment agreement or court order as to any existing delinquency.

Except as provided by Family Code, Section 231.302(d), a social security number is confidential and may be disclosed only for the purposes of responding to a request for information from an agency operating under the provisions of Subchapters A and D of Title IV of the federal Social Security Act (42 U.S.C. Sections 601 et seq. and 651 et seq.)

The Texas Department of Transportation maintains the information collected through this form. With few exceptions, you are entitled on request to be informed about the information that we collect about you. Under Sections 552.021 and 552.023 of the Texas Government Code, you also are entitled to receive and review the information. Under Section 559.004 of the Government Code, you are also entitled to have us correct information about you that is incorrect.

Please send this form to Texas Department of Transportation, Contract Services Office (CSO), Attn: Pat Bittner, 125 E. 11th Street, Austin, Texas 78701-2483.

ATTACHMENT I
SCHEDULE OF VALUES
PRELIMINARY COST ESTIMATE FORM

Application No. _____

Project No./Contract No. CBC-4704-00-

Project Name _____

_____

County _____

City _____

Developer Name _____

Note: Allowances will be based on Section 1320- Allowances in the Specifications- Attachment H.

ITEM NO.	DESCRIPTION OF WORK	SCHEDULED VALUE
1	Land	$0.00
2	Site Work	$0.00
3	Utilities	$0.00
4	Paving, curb and gutter	$0.00
5	Fencing with gates	$0.00
6	Landscaping (Allowance)	$20,000.00
7	Office Building	$0.00
8	Shop/Storage Building	$0.00
9	Truck Wash Bay	$0.00
10	Fuel Station	$0.00
11	Allowances (See Spec Section 01320)	$0.00
12	Bond	$0.00
13	Insurance	$0.00
14	Preconstruction (Design, Admin, etc)	$0.00
15	General Contractor	$0.00
16		$0.00
17		$0.00
18		$0.00
19		$0.00
20		$0.00
23		$0.00
24		$0.00
	TOTAL ESTIMATED PROJECT COST	$0.00

THIS FORM MUST BE FILLED OUT FOR PROPOSAL

Texas Department of Transportation

ATTACHMENT J

DEVELOPMENT AND EXCHANGE AGREEMENT

FOR

BELTON AREA ENGINEER/MAINTENANCE FACILITY

Belton, Texas

(CBC4704-00-668)

(BellCounty)

SAMPLE DRAFT

TABLE OF CONTENTS:

Article I ***General Definitions..... Page 2***

Article II ***General Laws Governing Construction..... Page 8***
2.1 Compliance with Laws.....Page 8
2.2 State Sales and Use Taxes.....Page 8
2.3 Antitrust Claims.....Page 8
2.4 Venue for Suits.....Page 8
2.5 Licensing of Trades.....Page 8
2.6 Patents and Copyrights.....Page 8
2.7 Environmental Laws.....Page 8
2.8 Antiquities.....Page 10

Article III ***Compliance with and Enforcement of Prevailing Wage Laws.....Page 10***
3.1 Duty to Pay Prevailing Wage Rates.....Page 10
3.2 Prevailing Wage Schedule.....Page 10
3.3 Penalty for Violation.....Page 10
3.4 Complaints of Violations of Prevailing Wage Rates.....Page 11
3.5 Prevailing Wage Retainage.....Page 12
3.6 No Extension of Time.....Page 12

Article IV ***Drawings and Specifications.....Page 12***
4.1 TxDOT's Ownership of Drawings.....Page 12
4.2 Copies Furnished.....Page 13
4.3 Interrelation of Documents.....Page 13
4.4 Resolution of Conflicts in Documents.....Page 13
4.5 Developer's Duty to Review Contract Documents.....Page 13
4.6 Discrepancies and Omissions in Drawings and Specifications.....Page 14

Article V ***Construction Bonds.....Page 14***
5.1 Performance and Payment Bonds.....Page 14
5.2 Chapter 2253.....Page 15
5.3 Certified Copies.....Page 15
5.4 Claims on Payment Bonds.....Page 15
5.5 Performance Bond Surety's Obligation.....Page 15

Article VI ***Insurance Requirements.....Page 15***
6.1 Insurance Requirements.....Page 15
6.2 Due Date.....Page 18
6.3 Policy Copies.....Page 18

Article VII ***Workers' Compensation Insurance Coverage***
(Pursuant to Texas Labor Code, Chapter 406, Subchapter G and

SAMPLE DRAFT

Title 28 Texas Administrative Code, Chapter 110)**.....Page 18**
7.1 Definitions.....Page 18
7.2 -7.12 (Statutory Requirements) .....Page 19
Article VIII ***General Responsibilities of TxDOT and the Developer*****.....Page 22**
8.1 TxDOT's General Responsibilities.....Page 22
8.2 Non-Developer Work.....Page 23
8.3 Limitation on TxDOT's and TDR's Duties.....Page 24
8.4 Role of TDR.....Page 24
8.5 Limitations on TDR Authority.....Page 25
8.6 Developer's General Responsibilities.....Page 25
8.7 Construction Timetable.....Page 29
8.8 Allowances .....Page 34

Article IX ***Additional Developer Responsibilities when TxDOT Awards Non-Developer Work*****.....Page 35**
9.1 Separate Non-Developer Work.....Page 35
9.2 Costs and Claims .....Page 35

Article X ***The Developer's Responsibility for Jobsite Safety*****.....Page 36**
10.1 Compliance with Laws.....Page 36
10.2 Emergencies.....Page 36
10.3 Environmental Safety and Control.....Page 37

Article XI ***Materials and Workmanship; Licensing and Testing*****.....Page 37**
11.1 Materials and Workmanship.....Page 37
11.2 Developer's Warranty of Workmanship .....Page 37
11.3 Testing.....Page 39
11.4 Developer's Testing.....Page 41
11.5 Commissioning.....Page 41

Article XII ***Submittals*****.....Page 41**
12.1 Submittals.....Page 41
12.2 Nature and Effect of Review.....Page 42
12.3 Correction and Resubmission.....Page 42
12.4 Distribution of Submittals.....Page 42
12.5 Intent of Accepted Plans and Specifications.....Page 42
12.6 Unauthorized Substitutions at Developer's Risk.....Page 43

Article XIII ***Quality Control and Quality Assurance During Construction*****.....Page 43**
13.1 Developer Quality Control.....Page 43
13.2 TxDOT Quality Assurance.....Page 43
13.3 Condemnation and Removal of Defective Work.....Page 44

Article XIV ***Development and Exchange Agreement Payments*****.....Page 45**

SAMPLE DRAFT

14.1 Contract Sum....Page 45
14.2 Schedule of Values ....Page 45
14.3 Progress Payments ....Page 45
14.4 Retainage or Reduction to Cover Loss....Page 47
14.5 Title to Work ....Page 47
14.6 No Release of Developer ....Page 47

Article XV Closing Inspections ....Page 47
15.1 Substantial Completion Inspection ....Page 47
15.2 Final Inspection ....Page 48
15.3 Final Punch List....Page 48
15.4 Annotation ....Page 48
15.5 Purpose of Inspection....Page 48
15.6 Certificate of Final Completion....Page 48

Article XVI Right of Occupancy....Page 49
16.1 Occupancy of Work Prior to Substantial Completion....Page 49

Article XVII Final Acceptance and Payment....Page 50
17.1 Request for Final Payment ....Page 50
17.2 Final Payment Documentation....Page 50
17.3 Review....Page 50
17.4 Offsets and Deductions ....Page 51
17.5 Final Payment Due ....Page 51
17.6 Effect of Final Payment ....Page 51

Article XVIII Developer's Warranty Guarantee ....Page 51
18.1 Developer's General Warranty and Guarantee....Page 51
18.2 Warranty Period....Page 52
18.3 Separate Warranties....Page 52

Article XIX Good Faith Effort Subcontractor Program (HUBs)....Page 53
19.1 General Program Description ....Page 53
19.2 Compliance with Approved HUB Subcontractor Plan....Page 54
19.3 Failure to demonstrate Good Faith Effort ....Page 54

Article XX Concealed Site Conditions ....Page 54
20.1 Developer's Duty to Inspect....Page 54
20.2 Unknown Conditions....Page 54

Article XXI Change Orders....Page 54
21.1 Effect ....Page 54
21.2 Adjustments....Page 55
21.3 Unilateral Change Orders....Page 55

SAMPLE DRAFT

21.4 No Cost Changes ..... Page 55
21.5 Valuation of Change Orders ..... Page 56
21.6 Developer's Risk of Performance ..... Page 57

Article XXII Administration of Change Order Requests ..... Page 57
22.1 Requests for Changes ..... Page 57
22.2 Processing Requests for Change ..... Page 58

Article XXIII Time Allotted for Performance; Construction Schedules ..... Page 58
23.1 Construction Timetable ..... Page 58
23.2 Project Schedule ..... Page 58
Article XXIV Modification of Contract Time ..... Page 59
24.1 Delays of and Extension of Time ..... Page 59
24.2 Time Extension Requests ..... Page 59
24.3 Suspension of Work for Cause ..... Page 60

Article XXV Termination and Suspension of the Development and Exchange Agreement Prior to Completion ..... Page 61
25.1 Termination by TxDOT for Cause ..... Page 61
25.2 Termination by Developer ..... Page 63
25.3 Settlement on Termination ..... Page 64

Article XXVI Dispute Resolution ..... Page 64
26.1 Alternative Dispute Resolution ..... Page 64
26.2 Condition Precedent to Formal Administrative Hearing ..... Page 64
26.3 Condition Precedent to Seeking Consent to Sue ..... Page 64
26.4 Continued Performance ..... Page 64

Article XXVII Miscellaneous ..... Page 64
27.1 Written Notice ..... Page 64
27.2 Computation of Time ..... Page 65
27.3 Survival of Obligations ..... Page 65
27.4 No Waiver of Performance ..... Page 65
27.5 Governing Law ..... Page 65
27.6 Venue ..... Page 65
27.7 Captions ..... Page 66
27.8 Independent Developer Status ..... Page 66
27.9 No Third Party Beneficiaries ..... Page 66
27.10 Entire Agreement ..... Page 66
27.11 Assignment ..... Page 66
27.12 Severability ..... Page 66
27.13 Parties Bound ..... Page 66
27.14 Sovereign Immunity ..... Page 66

SAMPLE DRAFT

27.15 Purchasing Preferences. .....Page 67
27.16 Detailed Records. .....Page 67
27.17 Title VI. .....Page 67

Article XXVIII Indemnification .....Page 67
28.1 Provisions .....Page 67

Signatures .....Page 69

Exhibits .....Page 71
Exhibit A-1 Legal Description of Site (Existing Belton Site)

Exhibit A-2 Legal Description of Site (Existing Killeen Site)

Exhibit A-3 Legal Description of Site (Existing Killeen Site)

Exhibit A-4 Development Restrictions/Encumbrances

Exhibit B Accepted Plans and Specifications

Exhibit C Absolute Guaranty

Exhibit D Schedule of Values

Exhibit E Prevailing Wage Schedule

Exhibit F Information provided to Developer (Section 4.7)

Exhibit G Project Schedule

Exhibit H HUB Subcontracting Plan Report

Exhibit I Standard DOT Title VI Assurances

Exhibit J Election Format for “As Built” Plans

Exhibit K Final Acceptance Certificate

Exhibit L Exchange Agreement

SAMPLE DRAFT

DEVELOPMENT AND EXCHANGE AGREEMENT

FOR

BELTON AREA ENGINEER/MAINTENANCE FACILITY

This **Development and Exchange Agreement** between the Texas Department of Transportation (hereinafter referred to as "TxDOT") and **("DEVELOPER NAME")**a (**State)** corporation (hereinafter referred to as ("**DEVELOPER NAME"**) is entered into pursuant to the authority under Transportation Code, Section 201.1055, effective as of the ____ day of _____, 2006.

RECITALS:

This **Development and Exchange Agreement** is entered into in furtherance of a design/build award to ("**DEVELOPER NAME"**) for the design and construction of the **Belton Area Engineer/Maintenance Facility** located at LP 121 and Connell Street, Belton, Texas pursuant to Transportation Code, Section 201.1055 (§201.1055) and required approval by the Texas Transportation Commission on (MINUTE ORDER DATE).

The Bond Review Board and Texas Public Finance Authority have received a prior notification of this transaction pursuant to §201.1055.

The General Land Office has received prior notification of this transaction pursuant to Natural Resources Code §31.157.

NOW, THEREFORE, in consideration of the mutual covenants set forth herein and other good and valuable consideration, the receipt of which is hereby acknowledged, the parties do hereby agree as follows:

SAMPLE DRAFT

Article I - General Definitions

Unless the context clearly requires another meaning, the following terms shall have the meaning assigned herein:

1.1 ***Allowances*** is defined in Section 8.8.

1.2 ***Accepted Plans and Specifications*** means the design narrative and performance specifications and design drawings identified on Exhibit B attached hereto.

1.3 ***Architect/Engineer*** means a person registered as an architect pursuant to Texas Occupations Code Chapter 1051, as a landscape architect pursuant to Texas Occupations Code Chapter 1051, and/or a person licensed as a professional engineer pursuant to Chapter 1001, or a firm employed by Developer to provide professional architectural or engineering services and/or performing certain **Development and Exchange Agreement** administration responsibilities.

1.4 ***Change Order*** means a written modification of the **Development and Exchange Agreement** between TxDOT and the Developer that changes the Contract Sum or the Contract Time.

1.5 ***Change Order Proposal Evaluation (CPE)*** means a Developer-generated document in response to a Change Order Request (COR) which states the adjustment necessary to change any Sum and/or Time in response to the changed work described in the Change Order Request (COR).

1.6 ***Change Order Request (COR)*** means a document generated by TxDOT which describes a change in the Work, including a description and sketches or drawings, as necessary, to inform the Developer of the nature of the change.

1.7 ***Claim*** means a dispute for which an agreed resolution between the Developer or its successor and TxDOT cannot be made informally through the Division/District level and has been filed as a contract claim in accordance with Article XXVI.

1.8 ***Closeout*** means the process of completing all details of both construction and commissioning. The Closeout period is the time from the Date of Substantial Completion until final payment.

1.9 ***Close-out Documents*** means the Record Drawings, standard product brochures, product/equipment maintenance and operations instructions, manuals, test reports, commissioning reports identified on Exhibit I attached

SAMPLE DRAFT

hereto, warranties, etc., and as may be further defined or identified and required by the Contract Documents.

1.10 ***Commissioning*** means placing the Project into full and proper operation, including starting and adjusting equipment and systems, functional performance testing, otherwise demonstrating compliance with the Contract Documents, correcting defects and obtaining any necessary permits.

1.11 ***Construction Drawings*** means the construction drawings prepared by the Architect/Engineer that establish in detail the quality levels of materials and systems required for the Project.

1.12 ***Contract*** means the **Development and Exchange Agreement** between TxDOT and the Developer.

1.13 ***Contract Date*** is the effective date of this **Development and Exchange Agreement** first set forth above.

1.14 ***Contract Documents*** means the Accepted Plans and Specifications; **Development and Exchange Agreement**; Absolute Guaranty; any Change Orders issued after execution of the **Development and Exchange Agreement**; Close-Out documents; performance and payment bonds; and insurance requirements set forth herein which are all incorporated in this **Development and Exchange Agreement** for all purposes.

1.15 ***Contract Sum*** means the total compensation payable to the Developer for completion of the Work and Professional Design Services set forth in Section 14.1 hereof, as subsequently adjusted by any Change Order(s). (This does not include financing costs.)

1.16 ***Contract Time*** means the period between Date of Commencement and the date scheduled for Substantial Completion of each phase of the Work as set forth in Exhibit G and as may be amended by Change Order(s).

1.17 ***Contractor*** means ("**DEVELOPER NAME"**).

1.18 ***Date of Commencement*** means the effective date of this **Development and Exchange Agreement**.

1.19 ***Day*** means a calendar day, unless otherwise specifically stipulated.

1.20 ***Delivery Dates*** means the respective target dates for Substantial Completion of each phase of the Work as set forth in the Project Schedule.

SAMPLE DRAFT

1.21 ***Design Development Drawings*** means the work product of the Architect/Engineer which illustrate and describe the refinement of the design of the Project, establishing the scope, relationships, forms, size and appearance of the Project by means of plans, sections and elevations, typical construction details, and equipment layouts.

1.22 ***Design Submittals*** means the Submittals described in Section 4.2.

1.23 ***Developer*** means ("**DEVELOPER NAME"**) as successor to ("**DEVELOPER NAME"**) by assignment effective as of the date of this Agreement.

1.24 ***Developer's Authorized Representative (DAR)*** is defined in Section 8.6.2.

1.25 ***Dispute*** means a disagreement between TxDOT and the Developer or its successor over the interpretation of the Contract Documents.

1.26 ***Environmental Laws*** means Comprehensive Environmental Response, Compensation and Liability Act of 1980, as amended ("CERCLA"), 42 U.S.C. §9601 et seq.; the Toxic Substance Control Act ("TSCAS"), 15 U.S.C. §2601 et seq.; the Hazardous Materials Transportation Act, 49 U.S.C. §1802; the Resource Conservation and Recovery Act ("RCRA"), 42 U.S.C. §9601, et seq.; the Clean Water Act ("CWA"), 33 U.S.C. §1251 et seq.; the Safe Drinking Water Act, 42 U.S.C. §300f et seq.; the Clean Air Act ("CAA"), 42 U.S.C. §7401 et seq.; M.G.L. c. 21C and c. 21E; Texas Health and Safety Code Chapter 361; Texas Water Code Chapter 26; and any permits, licenses, approvals, plans, rules, regulations or ordinances adopted, or other criteria and guidelines promulgated pursuant to the preceding laws or other similar federal, state or local laws, regulations, rules or ordinance now or hereafter in effect relating to environmental matters.

1.27 ***Final Completion*** means the date when the Work is fully performed, according to the **Development and Exchange Agreement**, as verified by a certificate of Substantial Completion issued by the Architect/Engineer, and the Project is delivered to TxDOT in accordance with the provisions of this **Development and Exchange Agreement**; subject to TxDOT's right to challenge such determination of Final Completion as set forth herein.

1.28 ***Force Majeure*** is defined in Section 8.7.5.

1.29 ***General Contractor*** means contractor responsible for all construction if different from Developer. ("**DEVELOPER NAME"**).

1.30 ***Guaranty*** means the Absolute Guaranty of **Development and Exchange Agreement** of even date herewith executed by ("**DEVELOPER NAME"**) for the benefit of TxDOT, pursuant to which ("**DEVELOPER NAME"**) guarantees

SAMPLE DRAFT

the full performance of all obligations of Developer under this **Development and Exchange Agreement** in the form as that attached hereto as Exhibit C.

1.31 ***Hazardous Materials*** is defined in Section 2.7.4.

1.32 ***Non Developer Work*** is defined in Section 8.2.

1.33 ***Project*** means the design and construction of certain improvements upon the Site consisting of (i) the base building elements and interior improvements, the scope of which is outlined in the Accepted Plans and Specifications and (ii) the Site work on the Site consisting of landscaping, sidewalks, driveways, parking areas and related improvements, all in accordance with the drawings, plans and specifications described on Exhibit B and included within the Accepted Plans and Specifications and any Change Orders thereto.

1.34 ***Project Schedule*** means the periods of time needed for staging and completion of each element of the Work between Date of Commencement and the date scheduled for Substantial Completion of each phase of the Work, as may be amended by Change Order, as set forth on Exhibit G.

1.35 ***Property*** means the Project site described on Exhibit A-1 attached hereto.

1.36 ***Request for Qualifications and Proposals (RFQ/RFP)*** means the procurement document issued by TxDOT on June 23, 2006 and Addenda dated (DATE), 2006, from which currently relevant and applicable provisions therein have been incorporated into Exhibit B.

1.37 ***Samples*** mean the physical examples of materials, equipment or workmanship, that are representative of some portion of the Work and which establish standards by which the Work will be judged for acceptance.

1.38 ***Schedule of Values*** means the detailed breakdown of the cost of the materials and labor necessary to accomplish the Work attached hereto as Exhibit D, as amended pursuant to this **Development and Exchange Agreement**.

1.39 ***Site*** means the real property as described on Exhibit A that is owned by TxDOT.

1.40 ***Subcontractor*** means a person or organization that, as an independent contractor, contracts directly or indirectly with the Developer or its successor to perform part or all of the Work. The term includes the Architect/Engineer. TxDOT acknowledges that Developer may subcontract with a General Contractor, ("**DEVELOPER NAME"**) or another general contractor, to perform all or a portion of the Work and that that general contractor may in turn, as a

SAMPLE DRAFT

Subcontractor to Developer, subcontract with additional subcontractors to perform part or all of the Work.

1.41 ***Submittals*** means the Design Submittals and Substantiation Submittals.

1.42 ***Substantial Completion*** means, with respect to each phase of the Work, the date established by the Architect/Engineer and, upon acceptance by TxDOT in accordance with the provisions of this **Development and Exchange Agreement**, by issuance of a Certificate of Substantial Completion, signed by the Architect/Engineer, confirming that the Work for the phase in question is sufficiently complete in accordance with the Accepted Plans and Specifications so that TxDOT can occupy or utilize the improvements covered in the applicable phase for their intended use without material interference from Developer's on-going performance of those portions of the Work which remain to be completed. The Work shall consist , as more particularly delineated on Exhibit B attached hereto. The date of Substantial Completion of each phase of the Work shall be established as set forth in Article XV.

1.43 ***Substantiation Submittals*** means the specific submittals required under the Accepted Plans and Specifications during construction.

1.44 ***TxDOT*** means the Texas Department of Transportation acting on behalf of the State of Texas.

1.45 ***TxDOT's Designated Representative (TDR)*** *mean*s TxDOT's Designated Representative and/or individual(s) so appointed or assigned as TxDOT's on-site representative during the Project.

1.46 ***TxDOT's Authorized Signatories*** means anyone whom, with prior notice to Developer, TxDOT may designate as a TxDOT Authorized Signatory. Only TxDOT's Authorized Signatories shall have the authority to act to provide direction as may be required to facilitate construction as provided herein on behalf of TxDOT.

1.47 ***Unit Price Work*** means Work to be paid for on the basis of unit prices.

1.48 ***Unilateral Change Order (ULCO)*** means a Change Order issued by TxDOT without the agreement of the Developer.

1.49 ***Work*** means all Architect/Engineer services and project administration for, and the complete construction of, the Project, together with procurement services, and includes labor necessary to produce such construction, and materials and equipment incorporated or to be incorporated in such construction. The parties expressly agree that the Work shall not include Non-Developer Work (hereinafter defined). (However, TxDOT may require the Developer to facilitate staging of the Non-Developer Work and will

SAMPLE DRAFT

coordinate certain Non-Developer Work without a Change Order as provided in Section 8.2.4, hereof. In the event Non-Developer Work causes a change as to time or scope of Work for the Developer, a Change Order may be issued in accordance with the provisions of Article XXI.

Article II - General Laws Governing Construction

2.1 Compliance with Laws. In the execution of the **Development and Exchange Agreement** and the Work, the Developer shall comply with all applicable State and Federal laws, including but not limited to, laws governing labor, equal employment opportunity, safety, environmental protection and prevailing wage rates. The Developer shall make himself familiar with and at all times shall observe and comply with all Federal, State and Local laws, ordinances and regulations which in any manner affect the conduct of the Work.

2.1.1 Fees and Permits. The Developer shall cooperate with city or other governmental officials at all times where their jurisdiction applies. The Developer shall make application, pay all fees and provide supporting documentation necessary to secure any permits required for the performance of the **Development and Exchange Agreement** and the Work. The Developer has a continuing obligation throughout the term of the **Development and Exchange Agreement** to construct the Project under duly issued permits. In the event the a necessary permit is revoked, the Developer must take immediate steps to apply for and receive another permit. TxDOT hereby confirms to Developer that City of Belton building permits **will be required** for work on the Project.

2.1.2 Change in Laws. If there is any change between the date hereof and Final Completion in any applicable legal requirements which requires a change in the Work in order to avoid a violation of any such applicable legal requirement, Developer shall be responsible for changing the Work in order to avoid a violation of such legal requirements. The parties shall execute a Change Order to adjust the Contract Sum and/or Contract Time, if applicable, as a result of any increase or decrease in costs or delay due to any change in legal requirements. If there is a change in any applicable legal requirement but the Work or portion thereof affected by such change is deemed to be “grandfathered” (i.e., the applicable legal requirement does not require that the Work be changed), such portion of the Work shall be deemed to comply and Developer shall not be required to change the Work.

2.2 State Sales and Use Taxes. TxDOT qualifies for exemption from State and Local Sales and Use Taxes pursuant to the provisions of Chapter 151, Texas

SAMPLE DRAFT

Tax Code. The Developer shall claim exemption from payment of applicable State taxes by complying with such procedures as may be prescribed by the State Comptroller of Public Accounts.

2.3 Antitrust Claims. The Developer hereby assigns to TxDOT any and all claims for overcharges associated with the **Development and Exchange Agreement** which arise under the antitrust laws of the United States, 15 U.S.C.A. Sec. 1, et seq.

2.4 Venue for Suits. The venue for any suit brought for breach of the **Development and Exchange Agreement** for this Project shall be in a state court of competent jurisdiction in **Bell County,** Texas.

2.5 Licensing of Trades. The Developer shall comply with all applicable provisions of state law related to required licensing of the Architect/Engineer and all skilled tradesmen, contractors, materialmen, suppliers and or laborers, as necessary to accomplish the Work.

2.5.1 In the event the Developer, the Architect/Engineer or one of the Developer's Subcontractors loses a required license for any reason during the term of performance of the **Development and Exchange Agreement**, the Developer shall promptly hire or contract with a licensed provider of the service at no additional cost to TxDOT.

2.6 Patents and Copyrights. The Developer shall be responsible at all times for compliance with applicable patents or copyrights encompassing, in whole or in part, any design, device, material, or process utilized, directly or indirectly, in the performance of the Work.

2.6.1 Whether or not TxDOT has specified the use of a particular design, devise, material or process, the Developer shall pay all royalties and license fees and shall provide, prior to commencement of the Work, a copy of any licenses from any patentee, copyright holder or their duly authorized representative.

2.7 Environmental Laws. At all times, the Developer shall conduct its activities in compliance with applicable Environmental Laws and regulations relating to the environment and its protection.

2.7.1 The Developer is responsible for obtaining and maintaining permits related to storm water run-off for the Site. The Developer covenants to conduct its operations consistent with storm water run-off permit conditions. TxDOT shall remain responsible for complying with all storm water run-off laws, rules, ordinances and regulations relating to TxDOT's remaining property that is not part

SAMPLE DRAFT

of the Site, provided any non-conforming condition is not due to the Developer's negligent or wrongful activities.

2.7.2 The Developer shall be responsible for any Hazardous Materials brought to the site by Developer, its Subcontractor, suppliers or anyone else for whom Developer is responsible. No Hazardous Materials shall be incorporated into the Work. Developer shall be responsible for Developer's or its Subcontractors' negligence in dealing with any Hazardous Materials.

2.7.3 Developer shall not directly or indirectly through any employees, agents, representatives, Subcontractors, invitees or any other persons occupying the Property or any portion thereof by, through or under Developer cause the pollution of air, soil, and water in, on, under, and around the Property or Project through the release or discharge of any Hazardous Materials. Developer, at its sole cost and expense, shall take any and all corrective action required by any applicable federal, state, county, municipal, and other laws, codes, ordinances, rules, and regulations to clean up, remove, and abate any and all soil contamination, groundwater contamination, or any other contamination of the Property caused directly or indirectly by any release or discharge of any Hazardous Materials in, on, under, and around the Property by Developer and/or Developer's employees, agents, representatives, Subcontractors, invitees, or any other persons occupying the Property or any portion thereof by, through, or under Developer.

2.7.4 As used herein, the term "Hazardous Materials" means (i) hazardous wastes, hazardous substances, hazardous constituents, toxic substances or related materials, whether solids, liquids or gases, including but not limited to substances defined as "hazardous wastes," "hazardous substances," "oils," "toxic substances," "pollutants," "contaminants," "radioactive materials," or other similar designations in, or otherwise subject to regulation under, the Comprehensive Environmental Response, Compensation and Liability Act of 1980, as amended ("CERCLA"), 42 U.S.C. §9601 et seq.; the Toxic Substance Control Act ("TSCAS"), 15 U.S.C. §2601 et seq.; the Hazardous Materials Transportation Act, 49 U.S.C. §1802; the Resource Conservation and Recovery Act ("RCRA"), 42 U.S.C. §9601, et seq.; the Clean Water Act ("CWA"), 33 U.S.C. §1251 et seq.; the Safe Drinking Water Act, 42 U.S.C. §300f et seq.; the Clean Air Act ("CAA"), 42 U.S.C. §7401 et seq.; M.G.L. c. 21C and c. 21E; Texas Health and Safety Code Chapter 361; Texas Water Code Chapter 26; and in any permits, licenses, approvals, plans, rules, regulations or ordinances adopted, or other criteria and guidelines promulgated

SAMPLE DRAFT

pursuant to the preceding laws or other similar federal, state or local laws, regulations, rules or ordinance now or hereafter in effect relating to environmental matters (collectively the "Environmental Laws"); and (ii) any other substances, constituents or wastes subject to any applicable federal, state or local law, regulation or ordinance, including any environmental law, now or hereafter in effect, including but not limited to (A) petroleum, (B) refined petroleum products, (C) waste oil, (D) waste aviation or motor vehicle fuel and (E) asbestos.

2.8 Antiquities. Developer shall take precaution to avoid disturbing primitive records and antiquities of archaeological, paleoanthropological or historical significance. No objects of this nature shall be disturbed without written permission of TxDOT and the Texas Historical Commission. When such objects are uncovered unexpectedly, the Develop shall stop all Work in close proximity and notify the TDR and the Texas Historical Commission of their presence and shall not disturb them until written permission and permit to do so is granted. All primitive rights and antiquities, as defined in Chapter 191, Texas Natural Resource Code, discovered on TxDOT's property shall remain property of State of Texas, the Texas Historical Commission. If it is determined by TxDOT, in consultation with the Texas Historical Commission that exploration or excavation of primitive records or antiquities on Project Site is necessary to avoid loss, Developer shall cooperate in salvage work attendant to preservation. If the Work stoppage or salvage work causes an increase in the Developer's cost of, or time required for, performance of the Work, Developer shall be entitled to an adjustment by Change Order as provided herein.

Article III- Compliance with and Enforcement of Prevailing Wage Laws

3.1 Duty to Pay Prevailing Wage Rates. The Developer shall pay not less than the wage scale of the various classes of labor as shown on the "Prevailing Wage Schedule" provided by TxDOT and attached hereto as Exhibit E pursuant to Chapter 2258, Texas Government Code. The specified wage rates are minimum rates only. TxDOT will not consider any claims for additional compensation made by any contractor because it pays wages in excess of the applicable minimum rate contained in the **Development and Exchange Agreement**. The "Prevailing Wage Schedule" is not a representation that quantities of qualified labor adequate to perform the Work may be found locally at the specified wage rates.

3.2 **Prevailing Wage Schedule. The United States Department of Labor "Prevailing Wage Schedule" for Bell County was determined by TxDOT to be the prevailing wage rate in the** in compliance with Chapter 2258, Texas Government Code. Should the Developer at any time become aware

SAMPLE DRAFT

that a particular skill or trade not reflected on TxDOT's Prevailing Wage Schedule will be or is being employed in the Work, whether by the Developer or by any Subcontractor, the Developer shall promptly inform the TDR and TxDOT shall specify the appropriate wage rate for that skill or trade in accordance with Chapter 2258 of the Texas Government Code, which shall bind the Developer.

3.3 Penalty for Violation. The Developer and any Subcontractor shall pay to the State a penalty of sixty dollars ($60.00) for each worker employed for each calendar day, or portion thereof, that the worker is paid less than the wage rates stipulated in the Prevailing Wage Schedule or any supplement thereto pursuant to Section 3.2. The Developer and each Subcontractor shall keep, or cause to be kept, an accurate record showing the names and occupations of all workers employed in connection with the Work, and showing the actual per diem wages paid to each worker, which records shall be open at all reasonable hours for the inspection by TxDOT.

3.4 Complaints of Violations of Prevailing Wage Rates.

3.4.1. TxDOT's Determination of Good Cause. Within thirty-one (31) days of receipt of information concerning a violation of Chapter 2258, Texas Government Code, TxDOT shall make an initial determination as to whether good cause exists to believe a violation occurred. TxDOT's decision on the initial determination shall be reduced to writing and sent to the Developer or Subcontractor against whom the violation was alleged, and to the affected worker with copies to the Trustee. When a good cause finding is made, TxDOT shall request the Trustee to retain the full amounts claimed by the claimant or claimants as the difference between wages paid and wages due under the Prevailing Wage Schedule and any supplements thereto, together with the applicable penalties, such amounts being subtracted from successive progress payments pending a final decision on the violation.

3.4.2 Arbitration Required if Violation not Resolved. After TxDOT makes its initial determination, the affected Developer or Subcontractor and worker have fourteen (14) days in which to resolve the issue of whether a violation occurred, including the amount that should be retained by TxDOT or paid to the affected worker. If the Developer or Subcontractor and affected worker reach an agreement concerning the worker's claim, the Developer shall promptly notify TxDOT in a written document signed by the worker. If the Developer or Subcontractor and affected worker do not agree before the fifteenth day after TxDOT's determination, the Developer or Subcontractor and affected worker must participate in binding

SAMPLE DRAFT

arbitration in accordance with the Texas General Arbitration Act, Chapter 171, Texas Civil Practice & Remedies Code. The parties to the arbitration have ten (10) days after the expiration of the fifteen (15) days referred to above, to agree on an arbitrator; if by the eleventh day there is no agreement to an arbitrator, a district court shall appoint an arbitrator on the petition of any of the parties to the arbitration.

3.4.3 Arbitration Award. If an arbitrator determines that a violation has occurred, the arbitrator shall assess and award against the Developer or Subcontractor the amount of penalty as provided in Section 3.3 hereof and the amount owed the worker. TxDOT may use any amounts retained under Section 3.4.1 hereof to pay the worker the amount as designated in the arbitration award. If TxDOT has not retained enough from the Developer or Subcontractor to pay the worker in accordance with the arbitration award, the worker has a right of action against the Developer and/or Subcontractor, as appropriate, and the surety of either to receive the amount owed, attorneys' fees and court costs. The Developer shall promptly furnish a copy of the arbitration award to TxDOT .

3.5 Prevailing Wage Retainage. Money retained pursuant to Section 3.4 shall be used to pay the claimant or claimants the difference between the amount the worker received in wages for labor on the Project at the rate paid by the Developer or Subcontractor and the amount the worker would have received at the general prevailing wage rate as provided by the agreement of the claimant and the Developer or Subcontractor affected, or in the arbitrator's award. The full statutory penalty of sixty dollars ($60.00) per day of violation per worker shall be retained on behalf of TxDOT to offset its administrative costs, pursuant to Texas Government Code §2258.023. Any retained funds in excess of these amounts shall be paid to the Developer with the next progress payment.

3.6 No Extension of Time. If TxDOT determines that good cause exists to believe a violation has occurred, the Developer shall not be entitled to an extension of time for any delay arising directly or indirectly from of the procedures set forth in Section 3.4.

Article IV - Drawings and Specifications

4.1 TxDOT's Ownership of Drawings and Specifications. All drawings, specifications and copies thereof furnished by the Developer are, and shall remain, TxDOT's property after payment for services rendered; provided that TxDOT shall be responsible for and shall release and forever discharge the

SAMPLE DRAFT

Developer and its Architect/Engineer from any and all claims, suits, demands, damages, losses, liabilities, costs and expenses, including reasonable attorneys' fees, arising out of any reuse of drawings and specifications or modification or alteration of the same on any TxDOT project other than the Project for which such drawings and specifications were originally created.

4.2 Copies Furnished. TxDOT will be furnished at no additional cost, ten (10) hard copy sets and one (1) electronic file set of: (1) Design Development Drawings and specifications and (2) Construction Drawings and specifications; to be delivered within the timeframe set forth in the Project Schedule (collectively, the "Submittals"). The Design Development Drawings and Construction Drawings shall be submitted. They shall be further subdivided by "package", i.e. site utilities, foundation, etc., as the Developer may elect to subdivide the Work. In addition, after submittal of the Design Development Drawings and prior to submittal of the Construction Drawings, Developer shall provide to TxDOT for informational purposes as they are available the interim construction drawings prepared by the Architect/Engineer to that date at fifty percent (50%) and ninety percent (90%) stages of completion.

4.3 Interrelation of Documents. The Design Development Drawings and Construction Drawings depict the location and quantity of elements of the Work. The specifications produced by the Architect/Engineer indicate quality. All documents are intended to be complimentary to produce the Work.

4.4 Resolution of Conflicts in Documents.

4.4.1 In the event of a conflict between (a) Design Development Drawings and/or Construction Drawings and (b) specifications produced by the Architect/Engineer, the specifications shall prevail. In the event of a conflict among provisions of specifications, using the CSI (Construction Standards Institute) format, what is called for in the division of the predominant discipline will govern inconsistent provisions found elsewhere. In the event of conflict between drawings and specifications, the better quality will prevail; provided that in any event, Developer shall not be required to provide any Work in excess of the Scope of Work set forth in Exhibit B.

4.4.2 In the event of conflict among the drawings, the large scale drawings will prevail over the small scale drawings or the greater quantity will prevail.

4.5 Developer's Duty to Review Contract Documents. In order to facilitate its responsibilities for completion of the Work in accordance with the **Development and Exchange Agreement** and Accepted Plans and

SAMPLE DRAFT

Specifications, prior to commencing the Work, the Developer shall examine and compare the listed documents with relevant field measurements made by the Developer; and any visible conditions at the Site affecting the Work.

4. 6 Discrepancies and Omissions in Drawings and Specifications.

4.6.1 If in the course of the performance of the obligations in Section 4.5, the Developer discovers any errors, omissions or inconsistencies in the drawings and specifications, the Developer shall promptly report them to TxDOT and remedy errors, omissions or inconsistencies at no cost to TxDOT.

4.6.2 If the Developer fails to perform the examination and reporting obligations of errors, omissions, or inconsistencies described in Sections 4.5 and 4.6.1, the Developer shall be responsible for any avoidable costs or direct damages to TxDOT, including the cost of remedy.

Article V - Construction Bonds

5.1 Performance and Payment Bonds. The Developer is required to tender to TxDOT, prior to commencing the Work, performance and payment bonds, as required by Chapter 2253, Texas Government Code.

5.1.1 A Performance Bond is required if the Contract Sum is in excess of $100,000. The performance bond is solely for the protection of the state, in the full amount of the Contract Sum and conditioned on the faithful performance of the Work in accordance with the **Development and Exchange Agreement** Documents. The form of the bond shall be approved by the Attorney General of Texas.

5.1.2 A Payment Bond is required if the Contract Sum is in excess of $25,000. A payment bond is payable to the state, in the full amount of the Contract Sum and solely for the protection and use of payment bond beneficiaries who have a direct contractual relationship with the Developer or who supply required materials or labor. The form of bond shall be approved by the Attorney General of Texas.

5.1.3 Corporate sureties authorized to issue bonds shall be qualified and comply with relevant provisions of the Texas Insurance Code.

5.2 Chapter 2253. The process of requiring and accepting bonds and making claims thereunder shall be conducted in compliance with Chapter 2253,

SAMPLE DRAFT

Texas Government Code. **IF FOR ANY REASON A STATUTORY PAYMENT OR PERFORMANCE BOND IS NOT HONORED BY THE SURETY, THE DEVELOPER SHALL FULLY INDEMNIFY AND HOLD TXDOT HARMLESS OF AND FROM ANY COSTS, LOSSES, OBLIGATIONS OR LIABILITIES IT INCURS AS A RESULT.**

5.3 Certified Copies. TxDOT shall furnish certified copies of a payment bond and the related **Development and Exchange Agreement** to any qualified person seeking copies who complies with Section 2253.026, Texas Government Code.

5.4 Claims on Payment Bonds. Claims on payment bonds must be sent directly to the Developer and its surety in accordance with Section 2253.041, Texas Government Code. All Payment Bond claimants are cautioned that no lien exists on the funds unpaid to the Developer on such **Development and Exchange Agreement**, and that reliance on notices sent to TxDOT may result in loss of their rights against the Developer and/or its surety. TxDOT is not responsible in any manner to a claimant for collection of unpaid bills, and accepts no such responsibility because of any representation by any agent or employee.

5.5 Performance Bond Surety's Obligation. The Surety for the Performance Bond shall undertake the obligations of the Developer in the event of the Developer's failure to perform pursuant to the **Development and Exchange Agreement** or in the event of Developer's insolvency or bankruptcy.

Article VI - Insurance Requirements

6.1 Insurance Requirements.

6.1.1 The Developer shall carry insurance in the types and amounts indicated in this Article for the duration of the **Development and Exchange Agreement**, which shall include items owned by TxDOT in the care, custody and control of the Developer prior to, during construction and during the warranty period. The Developer must also complete and file the declaration pages from the insurance policies with TxDOT whenever a previously identified policy period expires during the term of the **Development and Exchange Agreement**, as proof of continuing coverage. Acceptance of the insurance policy declaration pages by TxDOT shall not relieve or decrease the liability of the Developer.

6.1.2 The Developer shall provide and maintain, until the Work covered in this **Development and Exchange Agreement** is completed and accepted by TxDOT, the minimum insurance coverages in the minimum amounts as described below. Coverage shall be written

SAMPLE DRAFT

on an occurrence basis by companies authorized and admitted to do business in the State of Texas and rated A- or better by A.M. Best Company, or otherwise acceptable to TxDOT.

Type of Coverage:	Limits of Liability:
a. Worker's Compensation	Statutory
b. Employer's Liability	
Bodily Injury by Accident	$500,000 Ea. Accident
Bodily Injury by Disease	$500,000 Ea. Employee
Bodily Injury by Disease	$500,000 Policy Limit

c. Commercial General Liability, including coverage for the following:

1) Premises Operations 2) Independent Contractors 3) Products/Completed Operations 4) Personal Injury 5) Contractual Liability Explosion, Collapse, Underground Broad form property damage, to include fire legal liability	Combined Single Limit for Bodily Injury and Property Damage of $1,000,000 per occurrence or its equivalent.

d. Business Automobile Liability owned/leased, owned, hired:

Combined single limit for Non-Bodily Injury and Property Damage of $1,000,000 Per Occurrence or its Equivalent

e. TxDOT's Protective Liability Insurance Policy, naming the State of Texas and its employees as insured with the following limits:

SAMPLE DRAFT

Bodily Injury $1,000,000 Each Occurrence
$1,000,000 Aggregate

f. Builder's Risk Insurance

An all risk policy, including workmanship acceptable to TxDOT, in the amount equal at all times to one hundred percent (100%) of the Contract Sum. The policy shall be issued in the name of the Developer and shall name his contractors and subcontractors as additional insureds. TxDOT shall be named as a loss payee on the policy. The builders risk policy shall have endorsements as follow:

1. This insurance shall be specific as to coverage and not considered as contributing insurance with any permanent insurance maintained on the present premises. If off site storage is permitted, coverage shall include transit and storage in an amount sufficient to protect property being transported or stored.

2. Builder's Risk Policy shall be endorsed to include coverage for existing building structure(s).

g. Flood insurance in an amount equal to the Contract Sum.

h. Professional Liability Insurance that covers the Architect/Engineer and Contractor of the Developer for errors, omissions and negligent acts committed by the covered parties.

i. Nothing in this Article VI shall prevent the Developer from obtaining required insurance under a blanket or umbrella insurance policy which may cover any properties owned, leased, or operated by the Developer. However, any blanket or umbrella insurance policy shall specify, or Developer shall furnish TxDOT with a written statement from the insurer under such policy specifying the amount of the insurance allocated to the Work as provided in this Article.

6.1.3 <u>Policies must include the following provisions</u>:

a. The insurance shall not be canceled, limited in scope or coverage, or non-renewed until after thirty (30) days prior written notice, or ten (10) days for non-payment of premium, has been given to TxDOT.

SAMPLE DRAFT

b. The Developer's insurance shall be deemed primary with respect to any insurance or self insurance carried by the state agency for liability arising out of operations under the **Development and Exchange Agreement** with TxDOT.

c. TxDOT, its officials, directors, employees, representatives, and volunteers are added as additional insured as respects operations and activities of, or on behalf of, the named insured performed under **Development and Exchange Agreement** with TxDOT. (This is not applicable to the workers' compensation policy.)

d. The workers' compensation and employers' liability policy will provide a waiver of subrogation in favor of TxDOT.

6.1.4 If insurance policies are not written for the amounts specified in Section 6.1.2, the Developer shall carry Umbrella or Excess Liability Insurance for any differences in amounts specified. If Excess Liability Insurance is provided, it shall follow the form of primary coverage.

6.2 Due Date. The furnishing of the above listed insurance coverage must be tendered **prior to execution** of the **Development and Exchange Agreement**, and in no event later than ten (10) days from the date of execution. Failure to provide the insurance in a timely fashion is a default of the **Development and Exchange Agreement** and, if not cured within thirty (30) days after Developer's receipt of written notice of such default, cause cancellation of all contract documents. The Developer shall cease all activities until such default is cured.

6.3 Policy Copies. TxDOT shall be entitled, upon request and without expense, to receive copies of the policies and all endorsements as they apply to the limits set out in Section 6.1.2.

Article VII - Workers' Compensation Insurance Coverage (Pursuant to Texas Labor Code Chapter 406, Subchapter G and Title 28 Texas Administrative Code Chapter 110)

7.1 Definitions.

7.1.1 Certificate of coverage ("certificate") - A copy of a certificate of insurance, a certificate of authority to self-insure issued by the commission, or a coverage agreement (TWCC-81, TWCC-82, TWCC-83, or TWCC-84), showing statutory workers' compensation insurance coverage for the person's or entity's employees providing services on a project, for the duration of the project.

SAMPLE DRAFT

7.1.2 Duration of the project - includes the time from the beginning of the work on the project until the contractor's/person's work on the project has been completed and accepted by the governmental entity.

7.1.3 Persons providing services on the project ("subcontractor" in Section 406.096) - includes all persons or entities performing all or part of the services the contractor has undertaken to perform on the project, regardless of whether that person contracted directly with the contractor and regardless of whether that person has employees. This includes, without limitation, independent contractors, subcontractors, leasing companies, motor carriers, owner-operators, employees of any such entity, or employees of any entity which furnishes persons to provide services on the project. "Services" include, without limitation, providing, hauling, or delivering equipment or materials, or providing labor, transportation, or other service related to a project. "Services" does not include activities unrelated to the project, such as food/beverage vendors, office supply deliveries, and delivery of portable toilets.

7.2 The contractor shall provide coverage, based on proper reporting of classification codes and payroll amounts and filing of any coverage agreements, which meets the statutory requirements of Texas Labor Code, Section 401.011(44) for all employees of the contractor providing services on the project, for the duration of the project.

7.3 The Contractor must provide a certificate of coverage to the governmental entity prior to being awarded the contract.

7.4 If the coverage period shown on the contractor's current certificate of coverage ends during the duration of the project, the contractor must, prior to the end of the coverage period, file a new certificate of coverage with the governmental entity showing that coverage has been extended.

7.5 The contractor shall obtain from each person providing services on a project, and provide to the governmental entity:

a. a certificate of coverage, prior to that person beginning work on the project, so the governmental entity will have on file certificates of coverage showing coverage for all persons providing services on the project; and

b. no later than seven (7) days after receipt by the contractor, a new certificate of coverage showing extension of coverage, if

SAMPLE DRAFT

the coverage period shown on the current certificate of coverage ends during the duration of the project.

7.6 The contractor shall retain all required certificates of coverage for the duration of the project and for one year thereafter.

7.7 The contractor shall notify the governmental entity in writing by certified mail or personal delivery, within ten (10) days after the contractor knew or should have known, of any change that materially affects the provision of coverage of any person providing services on the project.

7.8 The contractor shall post on each project site a notice, in the text, form and manner prescribed by the Texas Workers' Compensation Commission, informing all persons providing services on the project that they are required to be covered, and stating how a person may verify coverage and report lack of coverage.

The following is the prescribed notice (a version in Spanish and any other language common to the worker population is also required with the title printed in at least thirty (30) point bold type and text in at least nineteen (19) point normal type):

"REQUIRED WORKERS' COMPENSATION COVERAGE"

"The law requires that each person working on this site or providing services related to this construction project must be covered by workers' compensation insurance. This includes persons providing, hauling, or delivering equipment or materials, or providing labor or transportation or other service related to the project, regardless of the identity of their employer or status as an employee."

"Call the Texas Workers' Compensation Commission at 512-440-3789 to receive information on the legal requirement for coverage, to verify whether your employer has provided the required coverage, or to report an employer's failure to provide coverage."

7.9 The contractor shall contractually require each person with whom it contracts to provide services on a project, to:

a. provide coverage, based on proper reporting of classification codes and payroll amounts and filing of any coverage agreements, which meets the statutory requirements of

SAMPLE DRAFT

Texas Labor Code, Section 401.011(44) for all of its employees providing services on the project, for the duration of the project;

b. provide to the contractor, prior to that person beginning work on the project, a certificate of coverage showing that coverage is being provided for all employees of the person providing services on the project, for the duration of the project;

c. provide the contractor, prior to the end of the coverage period, a new certificate of coverage showing extension of coverage, if the coverage period shown on the current certificate of coverage ends during the duration of the project;

d. obtain from each other person with whom it contracts, and provide to the contractor:

1. a certificate of coverage, prior to the other person beginning work on the project; and

2. a new certificate of coverage showing extension of coverage, prior to the end of the coverage period, if the coverage period shown on the current certificate of coverage ends during the duration of the project;

e. retain all required certificates of coverage on file for the duration of the project and for one year thereafter;

f. notify the governmental entity in writing by certified mail or personal delivery, within 10 days after the person knew or should have known, of any change that materially affects the provision of coverage of any person providing services on the project; and

g. contractually require each person with whom it contracts, to perform as required by § 110.110, with the certificates of coverage to be provided to the person for whom they are providing services.

7.10 By signing this contract or providing or causing to be provided a certificate of coverage, the contractor is representing to the governmental entity that all employees of the contractor who will provide services on the project will be covered by workers' compensation coverage for the duration of the project, that the coverage will be based on proper reporting of classification codes and payroll amounts, and that all coverage agreements will be filed with the

SAMPLE DRAFT

appropriate insurance carrier or, in the case of a self-insured, with the commission's Division of Self-Insurance Regulation. Providing false or misleading information may subject the contractor to administrative penalties, criminal penalties, civil penalties, or other civil actions.

7.11 The contractor's failure to comply with any of these provisions is a breach of contract by the contractor which entitles the governmental entity to declare the contract void if the contractor does not remedy the breach within ten (10) days after receipt of notice of breach from the governmental entity.

7.12 TxDOT and the Developer are bound by any further requirements found in Title 28 Texas Administrative Code Section 110.110. For purposes of this Article, the Developer is the General Contractor.

Article VIII - General Responsibilities of TxDOT and the Developer

8.1 TxDOT's General Responsibilities.

8.1.1 Preconstruction Conference. Prior to the issuance of Notice to Proceed, a conference will be held attended by TxDOT, TDR, the Developer and the Developer's Architect/Engineer, General Contractor, Superintendent and major Subcontractors, if chosen by such time, to review the schedules, procedures for handling Submittals, processing Applications for Payment, maintaining required records and all other matters of importance to the Project and effective communications on Site established under and consistent with the terms and conditions of this **Development and Exchange Agreement**.

8.1.2 TDR. Unless otherwise specifically provided for, the TDR is the single point of contact between TxDOT and Developer. Notice to the TDR, unless otherwise noted, constitutes notice to TxDOT under the **Development and Exchange Agreement**. Notices that may impact Contract Time, develop into Change Orders or change the scope of Work must be delivered directly to TxDOT, through the TDR. The TDR does not have authority to change any Work without written approval.

8.1.3 Utility Location. The Developer is responsible for obtaining accurate surveys, geographical and geotechnical data and accurate site utility locations (to the extent data is available from the applicable utilities).

8.1.4 TxDOT's Role with Utilities. TxDOT shall cooperate with Developer to vacate or relocate existing access agreements or utility easements or to establish new access agreements or utility

SAMPLE DRAFT

easements necessary or required to complete the Work and shall join in executing such appropriate documents as may be necessary or required to vacate, relocate and/or establish any such access agreements or utility easements to the extent allowed by law.

8.1.5 Availability of Other Lands. The Developer shall be solely responsible for obtaining authorization and paying any related fees to work within lands not under the sole control of TxDOT.

8.2 Non-Developer Work. Any other work, including but not limited to environmental remediation, installations, furniture, fixtures and equipment relating to the Project desired by TxDOT, to the extent not included within the scope of the Work under the **Development and Exchange Agreement** shall be deemed to be "Non-Developer Work" and shall be performed by TxDOT or its contractor and at the sole cost of TxDOT. The Developer shall cooperate with and, to the extent Developer can do so without interfering with the performance of the Work, afford TxDOT's separate contractors reasonable opportunity for (a) introduction and storage of their materials and equipment for execution of their Non-Developer Work, and (b) performance of their Non-Developer Work. All such materials and equipment shall be insured by TxDOT or its contractors or subcontractors, and all risk of loss, liability and responsibility for such stored materials and equipment shall belong to TxDOT or its contractors or subcontractors. Any and all such Non-Developer Work performed by or on behalf of TxDOT shall be performed in such a manner so as to not cause any interference with the Developer's completion of the Work; and the Developer shall have overall control of coordinating any such Non-Developer Work so as to ensure that such Non-Developer Work does not hinder or delay completion of the Work. If any Non-Developer Work does hinder or delay completion of the Work or otherwise cause Developer to incur any additional cost, Developer shall be entitled to an adjustment in the Contract Sum and/or Contract Time by Change Order in accordance with the provisions of this **Development and Exchange Agreement**. TxDOT's contractors shall be responsible for keeping the premises free from accumulation of waste materials or rubbish caused by their activities.

8.2.1 Environmental Remediation. The Developer is responsible for any remediation necessary due to contamination of the Site by Developer's activities. Delay of delivery due to remediation will be charged to developer.

8.2.2 Early Access. TxDOT shall have fifteen (15) days (beginning at the issuance of the Substantial Completion Certificate of the Work), to relocate TxDOT staff to the improvements and remove furniture, fixtures and equipment from the existing. The early access afforded to TxDOT hereunder, and the fifteen (15) days to move staff and vacate the current site is included in the Project Schedule

SAMPLE DRAFT

and there shall be no additional charge to TxDOT therefore. The Developer shall allow TxDOT access on a twenty-four (24) hour, seven (7) day per week basis. Once TxDOT's furniture and equipment is installed, Developer and its Subcontractors shall take appropriate steps in completing the Work to avoid damaging the same.

8.2.3 Coordination. The Developer shall cooperate with TxDOT to coordinate the Non-Developer Work regarding design, planning and installation of the modular furniture components with the Developer's Work and shall promptly communicate to the TDR any changes in the Work or Project Schedule that may be reasonably foreseen to have an impact on the Non-Developer Work**.** Such coordination shall include (i) prompt hard-wire connection of electrical and extension and termination of voice/data outlets to TxDOT's modular furniture panels as TxDOT installs same to enable TxDOT to complete installation of its modular furniture components in an efficient and timely manner, and (ii) installation coordination and utility connections of owner provided food service equipment.

8.3. Limitation on TxDOT's TDR's Duties. The TDR will not supervise, direct, control or have authority over or be responsible for the Developer's means, methods, technologies, sequences or procedures of construction or the safety precautions and programs incident thereto. TxDOT and TDR is not responsible for any failure of the Developer to comply with laws and regulations applicable to furnishing or performing the Work. TxDOT and TDR are not responsible for the failure of the Developer to perform or furnish the work in accordance with the **Development and Exchange Agreement**. TxDOT and TDR are not responsible for the errors, omissions or negligent acts of the Developer or of any contractor, subcontractor, any supplier, or of any other person or organization performing or furnishing any of the Work.

8.4 Role of TDR.

8.4.1 Authority. The TDR shall have the authority to recommend, to reject work performed by the Developer which, in the opinion of the TDR, does not meet the requirements of the **Development and Exchange Agreement** and drawings and specifications. Upon TxDOT's adoption of the TDR's recommendation, TxDOT shall order the Developer in writing to remove and replace such work in accordance with Article XIII. If Developer does not agree with the opinion of the TDR and/or TxDOT, the dispute shall be resolved in accordance with Article XXVI. The TDR will perform certain commissioning activities on behalf of TxDOT, at no cost to

SAMPLE DRAFT

Developer. Developer's obligations with respect to commissioning activities is set forth in the Accepted Plans and Specifications.

8.4.2 Visits of Site. The TDR shall make adequate site visits and perform construction observation satisfactory to TxDOT to monitor and observe the construction of the project. Site visits shall be at the stage of the work to ensure all materials and systems are observed for compliance prior to any concealment but shall not be less than once per week. Observations are to determine that the workmanship, quality of materials and systems performance comply with the requirements of the plans and specifications and all provisions of the **Development and Exchange Agreement**. Observation of all phases of the Work, material and equipment shall be provided by personnel technically qualified by education and experience to competently observe such work. The Developer shall at all times remain responsible and liable for any defective Work, whether or not detected by the TDR.

8.4.3 Coordination. The TDR will coordinate with the Developer on all matters regarding Non-Developer Work.

8.5 Limitations on TDR Authority. The TDR will not supervise, direct, control or have authority over or be responsible for the Developer's means, methods, techniques, sequences or procedures of construction, or the safety precautions and programs incident thereto. The TDR is not responsible for any failure of the Developer to comply with laws and regulations applicable to the furnishing or performing the Work. The TDR is not responsible for the Developer's failure to perform or furnish the Work in accordance with the drawings and specifications. The TDR and TxDOT are not responsible for the errors, omissions or negligent acts of the Developer, or of any contractor, subcontractor, any supplier, or of any other person or organization performing or furnishing any of the Work. (However, nothing herein shall be construed to limit any other duties the TDR may have to TxDOT under its contract regarding this Project.)

8.6 Developer's General Responsibilities.

8.6.1 Oversight. The Developer is the person or entity responsible to TxDOT for the performance of the Work. The Developer shall supervise and direct the Work using the best skill and attention. The Developer shall be solely responsible for all construction means, methods, techniques, safety, sequences and procedures, and for coordinating all portions of the Work.

8.6.2 Developer's Authorized Representative. Developer hereby designates (NAME) to be the Developer's Authorized Representative ("DAR").

SAMPLE DRAFT

The DAR shall represent the Developer at the Site and shall have full authority to act on behalf of the Developer. All communications given to the DAR shall be binding on the Developer. All oral communications affecting Contract Time, Contract Sum and **Development and Exchange Agreement** interpretation will be confirmed in writing to the Developer. In addition, the Developer shall cause to be on site on a daily basis a competent project superintendent or project manager or assistant project superintendent or assistant manager authorized to supervise the day-to-day performance of the Work and to receive and process all inquiries of TxDOT and/or the TDR. Such project superintendents or managers and assistant superintendents or assistant managers shall not have the authority to act on behalf of or bind the Developer. The Developer shall notify TxDOT 's TDR of all project superintendents or managers and assistant superintendents or assistant managers upon commencement of the Work and shall promptly notify the TDR of any additional DAR designated by the Developer and any new or substitute project superintendents or managers, or assistant superintendents or assistant managers appointed by the Developer.

8.6.3 Labor. The Developer shall provide competent, suitably qualified personnel to survey, lay out, and construct the Work as required by the drawings and specifications. The Developer shall at all times maintain good discipline and order at the Site. All workers employed by the Developer, contractors and subcontractors shall have such skill and experience as will enable them to properly perform their assigned duties. If, in the opinion of TxDOT, any person employed by the Developer or a Subcontractor does not perform Work in a proper and skillful manner, displays chronic uncooperative behavior, makes threats of or participates in physical aggression or endangerment, or who is disrespectful, intemperate, disorderly or otherwise objectionable, TxDOT shall so inform the Developer. The Developer shall in good faith take appropriate steps to deal with any such problems to insure that the Work is performed in accordance with this **Development and Exchange Agreement** at no additional cost or liability to TxDOT, and shall promptly inform TxDOT of all action taken in such matters.

8.6.4 Services, Materials, and Equipment. The Developer shall provide and assume full responsibility for all services, materials, equipment, labor, transportation, construction equipment and machinery, tools, appliances, fuel, power, light, heat, telephone, water, sanitary facilities, temporary facilities, and all other facilities and incidentals necessary for the performance, testing, start-up, and completion of the Work. The Developer shall be responsible for utility services to the Project. Once

SAMPLE DRAFT

TxDOT has occupied the premises TxDOT shall be responsible for existing utility services at the Site.

8.6.5 Utilities. The Developer is responsible for ascertaining the locations of any underground utilities. Developer is wholly responsible for any damages to any utilities as a result of its activities. The Developer shall notify owners of adjacent property and of underground facilities, and utility owners when prosecution of the Work may affect them or their facilities, and shall cooperate with them in the protection, removal, relocation and replacement of their facilities and/or utilities.

8.6.6 No Substitutions Without Approval. The Developer may make substitutions only with the consent of TxDOT, after evaluation and recommendation by the TDR and in accordance with a Change Order.

8.6.7 Documents and Samples at the Site. The Developer shall maintain at the site for TxDOT one record copy of the drawings/ plans/specifications, Change Orders and other modifications, in good order and marked currently to record field changes and selections made during construction, and one record copy of approved Shop Drawings, Samples and similar required submittals. These shall be available to the TDR and shall be delivered to TxDOT upon completion of the Work.

8.6.8 Testing of materials. The Developer shall pay for all routine testing of materials required for the Work under Sections 11.3.3 and 11.3.4 Retesting of materials failing the initial test will be paid for by the Developer without cost to TxDOT. The Developer shall replace materials which fail retesting without additional cost to TxDOT.

8.6.9 Compliance. The Developer shall be responsible for completion of the Work in compliance with the Accepted Plans and Specifications. The Developer shall not be entitled to any adjustment to the Contract Sum as a result of any errors and/or omissions in design by its Architect and/or other engineers and design professionals retained by or on behalf of the Developer. Should Work be identified by either the Developer's Architect/Engineer and/or the TDR as not being in compliance with the Contract Documents, the TDR shall communicate the finding to Developer. The Work shall be corrected by the Developer at its expense. If Developer contests the Architect/Engineer's and/or the TDR's determination, such dispute shall be resolved in accordance with the provisions of Article XXVI. The approval of Work by the Architect/Engineer does not relieve the Developer from compliance with all requirements of the drawings and specifications where such requirements were not judged at the time of observation of the Work

SAMPLE DRAFT

due to work sequences by the Developer or the lack of time to judge the performance characteristics of the particular Work item.

8.6.10 Contractors/Subcontractors. The Developer shall cause the construction of the Project to be performed by a General Contractor designated and employed by Developer. The General Contractor shall in turn subcontract with Subcontractors to perform portions of the Work. The Developer and its General Contractor shall have exclusive control over the selection and supervision of the Subcontractors performing the Work. No entities owing a debt to the state, entities employing anyone owing child support and entities on the Debarred Vendors List and Excluded Parties List System may be contracted to work on the Project. The list of debarred entities appears on the internet at www.tbpc.state.tx.us (cursor to "Procurement Resources", then cursor to "Vendor Performance Program", click on "Debarred Vendor List", then scroll down to "Excluded Parties List System"). The Developer may rely on the information obtained from the "TBPC" website and by contacting Scott Nichols, Letting Management Supervisor, by emailing snichols@dot.state.tx.us, calling (512) 416-2491, or fax at (512) 416-2536 for information about contractors and subcontractors debarred by TxDOT. The Developer shall have each Subcontractor certify that it does not owe any debt to the State and that none of its employees owe the State for non-payment of child support and may not contract with any subcontractor who fails to so certify. A list of persons owing child support appears on the State Comptroller's internet site at www.window.state.tx.us/taxinfo/coasintr.html (click on "corporation search"). Subcontractors may rely on information regarding child support from the internet at www.oag.state.tx.us (cursor to "child support" in the left margin and click on "employers", "evaders" and "forms and contacts"). The Developer shall be responsible to TxDOT for the performance of the Work with the same force and effect as if Developer itself shall have performed such Work with its own labor force. The Developer shall be responsible for errors and omissions in design and shall not be entitled to any adjustment for correcting the performance of the Work as a result of any errors and/or omissions in design by the Architect and/or other engineers and design professionals retained by or on behalf of Developer.

8.6.10.1 The Developer’s contract with its General Contractor and all subcontracts with the Subcontractors shall specifically state that TxDOT is the beneficiary of all rights of Developer under such contracts and that upon any default by Developer under this **Development and Exchange Agreement**, TxDOT shall have the right, but not the obligation, to enforce such construction contracts jointly and severally. TxDOT’s

SAMPLE DRAFT

rights against Subcontractors shall be in addition to all rights it has under this **Development and Exchange Agreement**.

8.6.10.2 The Developer shall be solely responsible for scheduling and coordinating the Work of contractors/subcontractors, suppliers and other persons and organizations performing or furnishing any of the Work under a direct or indirect contract with the Developer. All contractors/subcontractors, suppliers and such other persons and organizations performing or furnishing any of the Work shall communicate with TxDOT through the Developer.

8.6.11 Cleaning. The Developer shall at all times keep the Site and the Work clean and free from accumulation of waste materials or rubbish caused by the construction activities under the **Development and Exchange Agreement**. Upon completion of the Project, and prior to the final inspection, the Developer shall deliver the Work in a neat and clean condition.

8.6.12 Errors, Omissions and Negligent Acts of the Developer, contractors/subcontractors, and employees. The Developer shall be responsible for the errors, omissions and negligent acts of its Architect/Engineer, employees and Subcontractors, suppliers and their agents and employees.

8.6.13 The Developer shall promptly advise TxDOT in writing of any prevailing wage rate claim or lien claim under this **Development and Exchange Agreement.**

8.6.14 Construction Timetable. In performing the Work, the Developer shall achieve the milestone dates set forth in the schedule (the "Project Schedule") attached hereto as Exhibit G so that Substantial Completion of the Work shall be achieved on the Delivery Dates set forth in the Project Schedule, as to which Delivery Dates time shall be of the essence. The Project Schedule shall be updated by Developer from time to time (not less than monthly) in accordance with the progress of the Work. The Delivery Dates may only be extended as set forth in Subsection 8.7.1.

8.7.1 Extensions. The Delivery Dates may be extended only by reason of (i) a Change Order, (ii) a TxDOT Delay or (iii) the occurrence of Force Majeure. In the event of a Change Order, the Delivery Date shall be accelerated or postponed, if at all, only as set forth in such Change Order. In the event (i) a TxDOT Delay or Force Majeure

SAMPLE DRAFT

occurs and (ii) Developer would have otherwise been able to perform all its obligations under the **Development and Exchange Agreement** but for such delay, the Delivery Date(s) shall be extended by Change Order by the number of days equal to the days the Developer is actually delayed thereby. In the event of a TxDOT Delay or Force Majeure, the Contract Sum shall be subject to an equitable adjustment to reflect the increase or decrease in costs incurred by the Developer as a result of such TxDOT Delay or Force Majeure, and (A) TxDOT shall pay such increased amount to the Developer as work progresses or (B) TxDOT shall be credited for such decrease by an offset to the cost of any other Change Order(s). However, any additional costs due to Force Majeure shall not be charged to TxDOT to the extent of the Developer's insurance coverage. The Developer shall furnish TxDOT with an itemized accounting of actual costs for any adjustment.

8.7.2 Developer's Delay. If at any time in the course of the performance of its Work, the Developer shall fall behind the Project Schedule and shall not be entitled to request an extension of time by reason of a Change Order, TxDOT Delay or Force Majeure, then the Developer shall promptly submit to TxDOT a plan, including proposed adjustments to the Project Schedule, if any, showing how the Developer plans to mitigate the impact upon the timely completion of the Work and how it plans to regain any time lost. The cost and expense of any measures implemented to achieve the foregoing, shall be borne entirely by the Developer. If the Developer shall be unable to meet the Delivery Date(s) (as such date(s) is (are) adjusted by Change Orders) for any reason other than a TxDOT Delay or Force Majeure, then Developer shall pay Liquidated Damages as calculated pursuant to this Article.

8.7.3 Liquidated Damages. If the Substantial Completion Date for the Project does not occur on or before the Delivery Date (as designated on the Project Schedule), subject only to Change Order, Force Majeure and TxDOT Delay, then the Developer shall reimburse TxDOT for its Delay Damages from the Delivery Date until the Substantial Completion Date. Delay Damages means a liquidated damages per diem amount equal to the sum of **(AMOUNT)** per day, being TxDOT's reasonable estimate of costs it will incur (including, but not limited to, rental of other space, moving costs and interruption of business) due to the delay during such period. Liquidated Damages shall be paid by the Developer to TxDOT within ten (10) day's of the receipt of an itemized invoice from TxDOT.

SAMPLE DRAFT

8.7.4 TxDOT Delay. A TxDOT Delay shall mean delays or hindrances in the Work caused by (i) the errors, omissions or negligent acts of TxDOT in its performance of its respective obligations for the Project which errors, omissions or negligent acts are not corrected by TxDOT within forty-eight (48) hours after receipt of written notice from the Developer, or such other period of time as may be agreed upon by the parties, or (ii) TxDOT's failure to respond and give approvals and/or disapprovals of the Design Development Drawings and/or Construction Drawings within the time periods established under the Project Schedule after receipt of a request for approval and/or disapproval, or (iii) TxDOT's failure to respond and give approvals and/or disapprovals within five (5) State business days after receipt of a request for approval and/or disapproval of any other item or matter in regard to this **Development and Exchange Agreement**, or (iv) the performance of any Non-Developer Work. In the event of a TxDOT Delay, the Developer shall seek to minimize the period of delay or hindrance. If the Developer wishes to make a claim for an extension of the Delivery Date or increase in the Contract Sum by reason of a TxDOT Delay, the Developer shall give prompt notice to TxDOT of such claim. The Developer shall furnish TxDOT with an itemized accounting of actual costs for any adjustment.

8.7.5 Force Majeure. A Force Majeure shall mean delays or hindrances in the Work caused by (i) acts of God; (ii) strikes, labor disputes, labor shortages or material shortages outside of the Developer's reasonable control; (iii) blackouts; (iv) acts of public enemy; (v) orders of any kind of the government of the United States or of the State of Texas or any department, agency, political subdivision or official of either of them, or any civil or military authority; (vi) riots; (vii) epidemics disabling the labor force; (viii) landslides; (ix) earthquakes affecting the Project; (x) fires; (xi) hurricanes and/or tornadoes; (xii) adverse weather conditions (i.e., the number of days in excess of the normal weather [rain or snow days] as defined for a thirty (30) day period by the National Weather Service, National Oceanic and Atmospheric Administration (NOAA), Texas metropolitan area and not considered in the Construction Timetable); (xiii) floods; (xiv) partial or entire failure of public utilities affecting the Project; (xv) delays associated with concealed, unknown, or unforeseen conditions associated with the Property which with reasonable diligence could not have been discovered by the Developer prior to execution of this Agreement; (xvi)delay in issuing any governmental or regulatory permit, license or approval necessary or required for development of the Project which with reasonable diligence could not have been avoided by the Developer; (xvii) the discovery of any hazardous materials or other

SAMPLE DRAFT

environmental contaminants on, under or within the real property or any remediation activities therefore, provided the Developer has performed due diligence to determine whether the Site contained hazmat; (xviii) delays due to compliance with the provisions of Section 2.8 hereof; and (xix) any other similar cause or event not reasonably within the Developer's, contractors'/subcontractors' control and not resulting from their errors, omissions or negligent acts. The Developer shall give notice to TxDOT of the occurrence of any event of Force Majeure that may give rise to a claim for an extension of the Delivery Date as soon as reasonably possible after the discovery by the Developer of such Force Majeure event. The Developer shall thereafter use all reasonable diligence in attempting to overcome or lessen the impact of such Force Majeure event and shall keep TxDOT reasonably informed of Developer's progress in mitigating the effects of any such Force Majeure event, provided that Developer shall not be required to incur any additional costs in attempting to mitigate such effects unless and until TxDOT has executed a Change Order adjusting the Contract Sum to cover any such increased costs. Any increase in costs due to Force Majeure shall not include a profit, only actual costs. If the Developer wishes to make a claim for an increase in the Contract Sum by reason of a Force Majeure event, the Developer shall give prompt notice to TxDOT of such claim. The Developer shall furnish TxDOT with an itemized accounting of actual costs for any adjustment and the parties shall execute a Change Order to cover any increase in cost properly attributable to such Force Majeure event. **See Section 10.3 for further terms on costs of hazmat.**

8.7.6 Requirements for Substantial Completion. For each phase of the Project, the Work must be complete in accordance with the Accepted Plans and Specifications for TxDOT to occupy or utilize the buildings for their intended use without material interference from the Developer's on-going performance of those portions of the Work which remain to be completed. For purposes herein, "Substantial Completion Date" shall mean the date on which (i) the Architect/Engineer has certified that the Work for each phase of the Project has been substantially completed within the definition of "Substantial Completion" set forth above. All operation and maintenance manuals for the completed phase of the Work must be submitted and all training for the applicable phase must be complete.

8.7.7 Punch List Items. On or before the Substantial Completion Date for each phase, the Developer shall deliver to TxDOT a listing of the Punch List Items that the Developer believes it is obligated by the provisions of this Agreement to complete and shall cause the

SAMPLE DRAFT

Architect/Engineer to submit a supplemental list of Punch List Items with its Certificate of Substantial Completion as set forth in Section 15.1. TxDOT shall advise the Developer within ten (10) days after receipt of the Architect/Engineer's list of Punch List Items of any additional Punch List Items which TxDOT believes the Developer is obligated by the provisions of this **Development and Exchange Agreement** to complete. Any disagreements between the Developer and TxDOT regarding Punch List Items shall be resolved in accordance with Article XXVI. The term "Punch List Items" shall mean details of construction and mechanical and electrical adjustments which are minor in character and do not materially interfere with TxDOT's use or enjoyment of the Project, and may also include landscaping and other items which do not materially affect TxDOT's use of the Project but which cannot be immediately completed because of weather. Punch List Items may not include operation and maintenance manuals and training. These items are considered essential elements of the Project and completion of these items is required for Substantial Completion of the Project or designated portions thereof. The Developer shall use its diligent good faith efforts to complete all Punch List Items within sixty (60) calendar days after the receipt of TxDOT's additional Punch List Items, subject to Force Majeure and TxDOT Delays. If the Developer fails to complete any Punch List Item within sixty (60) calendar days after the receipt of TxDOT's additional Punch List Items, subject to Force Majeure and TxDOT Delays, TxDOT shall have the right to complete any such Punch List Item, using duly qualified contractors, and the Developer shall reimburse TxDOT for any reasonable costs incurred by TxDOT in completing any such Punch List Item within thirty (30) days after receipt of TxDOT's written invoice.

8.7.8 As Built Plans. The Developer shall furnish TxDOT a complete set of reproducible "As Built" plans in hard copy and in electronic format, per Exhibit L attached hereto, within sixty (60) calendar days following completion of each phase of the Work. The "As Built" plans must be prepared by a professional or engineer of record, registered in Texas, whose signature and seal shall be prominently displayed on the title sheets. If the "As Built" plans have not been delivered to TxDOT on or before the date of payment of the Final Payment, TxDOT may withhold from the Final Payment the sum of ten thousand dollars ($10,000) until Developer has caused to be delivered to TxDOT the missing "As Built" plans. "As Built" plans must be kept current on a monthly basis during the progress of the Work. If "As Built" plans are not current and may have such amount withheld until the "As Built" plans are brought

SAMPLE DRAFT

current. Failure to submit "As Built" plans prior to final completion may subject the Developer to liability for further damages.

8.7.9 Lien Removal. If, at any time, there is any lien or claim of any kind whatsoever filed against the Project by contractors/subcontractors, Architects, engineers or other design professionals or anyone claiming under or through Developer, contractors/subcontractors, Architects, engineers or other design professionals for work performed or materials, supplies or equipment furnished in connection with the Work, the Developer shall, within sixty (60) days, or such shorter period as is required by any loan secured by the Project, cause such lien or encumbrance to be canceled and discharged of record by payment, bonding or otherwise, at Developer's sole cost and expense, and at no cost to TxDOT. If any lien or other encumbrance required to be removed at the Developer's sole cost and expense is not canceled and discharged of record, TxDOT shall have the right to take such action as TxDOT shall deem appropriate (which shall include the right to cause such lien or other encumbrance to be canceled and discharged of record). In such event, all costs and expenses incurred by TxDOT in connection therewith (including, without limitation, premiums for any bond furnished in connection therewith, and reasonable attorneys' fees, court costs and disbursements), together with interest thereon at the highest rate allowed by law, shall be paid by Developer to TxDOT upon receipt of written demand.

8.7 Allowances. Set forth in Exhibit B as part of the Accepted Plans and Specifications is a schedule of allowance items ("Allowance Items"), identifying portions of the Work for which the Developer and TxDOT have agreed upon as the amount allocated for each of the Allowance Items. All savings under any of the designated Allowance Items shall accrue to the benefit of TxDOT and the Contract Sum shall be reduced by one hundred percent (100%) of such savings. If the cost of any of the Allowance Items exceeds the corresponding amount set forth in Exhibit B for the Allowance Item, the Contract Sum shall be increased dollar-for-dollar for the actual cost in excess of the amount allocated to the Allowance Item by Change Order as provided for herein, and TxDOT shall pay to Developer any such increase in the Contract Sum within thirty (30) days after receipt of written itemized invoice from Developer. Developer shall not incur any costs for any of the Allowance Items in excess of the respective amounts set forth in Exhibit B without the prior written consent of TxDOT as reflected in a Change Order.

SAMPLE DRAFT

Article IX - Additional Developer Responsibilities when TxDOT Awards Non-Developer Work

9.1 Separate Non-Developer Work. TxDOT reserves the right to award Non-Developer Work in connection with other portions of the Project. TxDOT reserves the right to perform operations related to the Project (that are outside of the scope of the Work) with TxDOT's own forces or contractors, subject to compliance with the provisions of Section 8.2 hereof. The Developer shall not be required to indemnify TxDOT as set forth in Article XXVIII for any errors, omissions or negligent acts related to Non-Developer Work.

9.1.1 Developer Duties. The Developer shall cooperate with TxDOT to coordinate the Non-Developer Work with the Developer's Work and shall promptly communicate to the TDR any changes in the Work or Project Schedule that may be reasonably foreseen to have an impact on the Non-Developer Work. If any part of the Developer's Work depends for proper execution or proper results on Non-Developer Work, the Developer shall inspect and promptly report in writing to the TDR any visually apparent discrepancies or defects found in such other work that render it unsuitable for such proper execution and results.

9.1.2 Damage. Should the Developer cause damage to the Non-Developer Work included within the scope of Non-Developer Work identified in Sections 8.2.1 through 8.2.4, the Developer shall, upon due written notice, endeavor to settle with TxDOT. If there is no settlement, any dispute shall be settled in accordance with Article XXVI. All other Non-Developer Work shall be performed at TxDOT's own risk and Developer shall not have any liability for any damage that may occur to any of such additional Non-Developer Work.

9.1.3 Storage. In addition to Developer's obligations under Section 9.1.2, the Developer shall use its good faith efforts to afford the Non-Developer Work and TxDOT's own forces, as necessary, with the reasonable opportunity for the introduction and storage of materials and equipment and the execution of the Non-Developer Work if and to the extent the Developer may do so without additional cost or delay in performing the Work.

9.2 Costs and Claims. Except as provided in Section 9.1.2, the Developer shall not be responsible for any costs incurred by TxDOT with respect to the Non-Developer Work caused by delays, improperly timed activities or defective construction by the Non-Developer, as TxDOT assumes all risk with respect to the performance of the Non-Developer Work. Developer may assert a

SAMPLE DRAFT

claim for such Developer cost incurred because of delays, improperly timed activities, damage to the Work or defective construction by Non-Developer Work. Developer may make claim for such amounts as outlined in Article XXII.

Article X - The Developer's Responsibility for Jobsite Safety

10.1 Compliance with Laws. The Developer shall be responsible for initiating, maintaining and supervising all safety precautions and programs in connection with the Work. It shall be the duty and responsibility of the Developer and all of its contractors/subcontractors to be familiar and comply with all requirements of Public Law 91-596, 29 U.S.C. §§ 651 et. seq., the Occupational Safety and Health Act of 1970, (OSHA) and all amendments thereto, and to enforce and comply with all of the provisions of the Act. The Developer shall comply with all applicable laws and regulations of any public body having jurisdiction for safety of persons or property to protect them from damage, injury or loss and shall erect and maintain all necessary safeguards for such safety and protection.

10.2 Emergencies. In any emergency affecting the safety of persons or property, the Developer shall act reasonably to prevent threatened damage, injury or loss. The Developer shall give the TDR prompt notice if the Developer believes that any significant changes in the Work or variations from **Development and Exchange Agreement** Documents have been caused by its emergency response. Any additional compensation or extension of time claimed by the Developer resulting from emergency work shall be considered in accordance with Articles XXI and XXII.

10.2.1 Response. Authorized agents of the Developer shall respond immediately to an emergency call at anytime of day or night when circumstances warrant the presence of the Developer to protect the Work or Property from damage, restriction or limitation or to take such action pertaining to the Work as may be necessary to provide for the safety of the public. Should the Developer fail to respond to an emergency within a reasonable time given the nature of the emergency, TxDOT is authorized to direct other forces to take action as necessary and TxDOT may deduct any cost of remedial action from the funds due the Developer.

10.2.2 Notice. In the event of an accident involving a lost time injury to an individual on or near the Work, the Developer shall notify the TDR within twenty-four (24) hours of the event. The Developer shall record the location of the event, the circumstances surrounding the event, by using photography or other means, and shall gather witness statements and other documentation which describe the event. The Developer shall supply the TDR with a set of these

SAMPLE DRAFT

documents no later than thirty-six (36) hours after the occurrence of the event.

10.2.3 Other Communications. The Developer shall be responsible for coordinating the exchange of material safety data sheets or other hazard communication information required to be made available to or exchanged between or among employers at the site in connection with laws and regulations.

10.3 Environmental Safety and Control. Upon encountering any previously unknown hazardous waste material, or other materials contaminated by hazardous waste not discovered through due diligence, the Developer shall immediately stop work in and secure the affected area, and notify the TDR. All contracts and subcontracts shall expressly bind contractors and subcontractors to the same duty. On receiving such notice, TxDOT shall promptly engage qualified experts to make such investigations and conduct such tests as may be reasonably necessary to determine the existence or extent of any environmental hazard. As soon as possible upon completion of this investigation, TxDOT shall issue a written report to the Developer identifying the material or materials found and indicating any necessary steps to be taken to treat, handle, transport or dispose of the material. TxDOT may hire third-parties to perform any or all such steps. The Developer shall be responsible for coordinating the exchange of material safety data sheets or other hazard communication information required to be made available to or exchanged between or among employers at the site in connection with laws and regulations unless TxDOT and Developer execute a Change Order for such work. The cost of remediation shall be borne by Developer. Other costs incurred by the Developer as a result of any work stoppage attributable to any such Hazardous Materials shall entitle the Developer to a Change Order adjusting the Contract Sum and/or extending the Contract Time to reflect any such impact, subject to TxDOT's right to contest such claim under Article XXVI. The Developer shall proved TxDOT with an itemized accounting of these costs.

Article XI - Materials and Workmanship; **Licensing and Testing**

11.1 Materials and Workmanship. The Developer warrants and guarantees that all Work shall be executed in a good and workmanlike manner, complete in all parts and in accordance with approved practices and customs. All materials and equipment incorporated into the Work shall be new.

11.2 Developer's Warranty of Workmanship. The Developer warrants that the Work will conform to all requirements of the Accepted Plans and Specifications and will be free from any defect of equipment, material or design furnished or workmanship performed by the Developer, contractors/subcontractors, and suppliers at any tier. The Warranty for the

SAMPLE DRAFT

Work shall continue for one year from the date of Substantial Completion. The Developer shall remedy at its own expense any damages to the Work and TxDOT's real or personal property caused by any defect of design, equipment, materials or workmanship occurring within such one year warranty period.

11.2.1 Notice. The TDR shall notify the Developer in writing within forty eight (48) hours after the discovery of any failure, defect or damage pertaining to the Work.

11.2.2 Remediation. For purposes herein, "remediation" means the repair, replacement or restoration of damages caused by defects in design, equipment, materials or workmanship. The Developer shall proceed with remediation in an expeditious manner. Failure of the Developer to commence remediation within thirty (30) days after receipt of notice shall be cause for TxDOT to perform the remediation at the Developer's expense or require the surety to fulfill the Developer's obligations. Performance by TxDOT or the surety shall not release the Developer from its warranty or liability for costs incurred by TxDOT in performing the remediation.

11.2.3 Limits on Warranty. The Developer's Warranty and guarantee hereunder excludes defects or damage caused by:

a. Abuse, modification or improper maintenance or operation by persons other than the Developer, suppliers, contractors/subcontractors, or any other individual or entity for whom the Developer is responsible, and

b. Normal wear and tear under normal usage.

11.2.4 Events Not Affecting Warranty. None of the following will constitute an acceptance of Work that is not in accordance with the Developer's warranty of workmanship or a release of the Developer's obligation to perform the Work:

a. observations by TxDOT and/or the TDR;

b. performance of remediation by TxDOT or the Developer's surety;

c. issuance of a certificate of Substantial Completion or any payment to the Developer;

d. use or occupancy of the Work or any part thereof by TxDOT;

SAMPLE DRAFT

e. any acceptance by TxDOT or any failure to do so;

f. lack of any inspection or testing;

g. any review of a Shop Drawing or sample submittal; or

h. any inspection, test or approval by others.

11.3 Testing. With respect to all testing required under subsection 11.3.2, the Developer shall give the TDR timely notice of its readiness and of the date arranged so the TDR may observe such inspection, testing or approval. The frequency of testing shall be in accordance with industry standards.

11.3.1 Verification of Compliance. When requested by TxDOT, demonstration of a material's compliance with the specifications shall be made by one of the following (to the extent customarily available):

a. Manufacturer's certificate of compliance.
b. Mill certificate.
c. Testing laboratory certification.

11.3.2 Materials subject to Test. Materials incorporated into the Project may be subject to routine tests as required to insure their compliance with the specifications to the extent such tests are customarily performed in the industry for the material in question. Materials to be tested are the following:

a. Concrete and Aggregates - Mix design and confirmation; slump tests; cylinder compression tests; aggregate testing; onsite and batch plant control; pre-pour observation of reinforcement placing; cast-in-place concrete inspections and testing; compressive strength test; pier inspections/observations.
b. Masonry - concrete masonry unit testing; evaluation of mortars and grout compressive strength; observation.
c. Steel - Tensile tests.
d. Structural Steel - Non-destructive welding inspection; reinforcing steel inspections and testing; bolt and torque inspection.
e. Welds - Field inspection and X-ray equipment.
f. Earthwork - Subsoil investigation; physical analysis and compaction tests; inspections and testing; moisture-density control (Proctor-ASTM/AASHTO); field density test; borrow source evaluation; stabilization monitoring and testing.

SAMPLE DRAFT

g. Asphalt - Mix designs and confirmation; onsite and batch plant control; rolling pattern identification; laboratory testing of density, stability, permeability and swell value; testing of asphalt striping.

h. Pavement - Physical analysis and compaction tests.

i. Roofing - Samples cut from materials used; assemblies' observation and testing.

j. Fireproofing - Measurements of thickness and unit weight; adhesion/cohesion testing.

k. Other Materials - TxDOT may direct the Developer to test any other materials for which standard laboratory or industry testing procedures have been established provided TxDOT has objective evidence of probable failure of the material to meet its intended purpose. If tests prove that the material complies with specifications, TxDOT will reimburse the Developer for laboratory fees. If noncompliance is proved, laboratory fees will be paid by the Developer.

The Developer shall be held responsible for providing samples of sufficient size for test purposes. All tests will be in accordance with professional societies' standard test procedures. Developer shall notify the TDR of all required tests and the TDR shall have the right to observe all such tests. Results of all tests will be provided to TxDOT.

11.3.2.1 Cost of Testing. The Developer shall pay for all testing required in this Section 11.3.2.

11.3.3 Additional Compliance Tests. Should any of the routine tests indicate that a material does not comply with the job requirements, the burden of proof of compliance shall be with the Developer, subject to the following conditions:

a. The Developer may select the laboratory for further testing and TxDOT may review the quality and nature of the test for compliance with industry standards.

b. Samples shall be taken in the presence of TxDOT or the TDR.

c. If tests prove that the material complies with specifications, TxDOT will reimburse the Developer for laboratory fees. If noncompliance is proved, laboratory fees will be paid by the Developer.

SAMPLE DRAFT

d. Proof of noncompliance will make the Developer liable for any necessary or required corrective action, including complete removal and replacement of defective material.

e. All subsequent tests on original or replaced materials conducted as a result of prior failure will be paid by the Developer.

11.3.4 Special Testing. TxDOT may require via Change Order special inspection, testing or approval of material or Work for compliance with requirements of the drawings and specifications. In the event the materials or Work fail, the Developer shall pay the cost for testing and replacement.

11.4 Developer's Testing. Nothing contained herein is intended to imply that the Developer does not have the right to have tests performed on any material at any time for his own information and job control so long as TxDOT is not charged for costs or forced to rely upon such tests when appraising quality of materials. Any modification of, or elaboration on, these test procedures which may be included for specific materials under their respective specification sections shall take precedence over these procedures.

11.5 Commissioning. The Developer shall cooperate with TxDOT and the Commissioning Agent for the commissioning of building systems described in the Commissioning Plan dated (DATE) and included in this agreement. The Developer, A/E Team, and the General Contractor will collaborate closely with TxDOT and the Commissioning Agent and comply with all roles and responsibilities outlined in the Commissioning Plan.

Article XII –Submittals

12.1 Submittals. The Developer shall provide to TxDOT all Submittals–and TxDOT shall have the time period established in this Section or elsewhere in this **Development and Exchange Agreement** to approve or disapprove such Submittals and, if a specific time period is not established in the Project Schedule, within fourteen (14) days after TxDOT's receipt of each Submittal. The submittal schedule shall be provided to TxDOT within ninety (90) days of the execution of this **Development and Exchange Agreement**. The Developer shall maintain an accurate Submittal Log and copy both TxDOT and/or the TDR on all transmittals**.**

12.1.1 Review and Certification. The Developer shall review each Submittal for compliance with the Accepted Plans and Specifications and shall certify that it has done so by stamp, or otherwise, affixed to each copy thereof. Submittal data presented without such certification will be returned without review or other

SAMPLE DRAFT

comment, and any resulting delay will be the Developer's responsibility. By submitting shop drawings, samples or other required information as part of a Submittal, the Developer thereby represents that it has determined and verified all field measurements, field construction criteria, materials, catalog numbers and similar data, or will do so, and that it has checked and coordinated each such shop drawing and sample with the requirements of the Work and of the Accepted Plans and Specifications.

12.1.2 Notice of Deviations. At the time of submission of any Submittal, the Developer shall inform TxDOT in writing of any deviation in any shop drawings or samples included as part of a Submittal from the requirements of the Accepted Plans and Specifications. TxDOT retains the right to refuse any deviations and the Developer must comply with TxDOT's demand for conformity, unless such deviation is a correction of any errors in design, materials or equipment, in which case there will be no charge to TxDOT.

12.1.3 Interim Information. The interim construction drawings provided by Developer pursuant to Section 4.2 shall be provided to TxDOT as called for in Section 4.2 for TxDOT's informational purposes.

12.2 Nature and Effect of Review. TxDOT's TDR will review the initial Submittal within the time periods established hereunder, but for no longer than five (5) business days and will review only for conformance with the design concept of the Project with the information given in the Accepted Plans and Specifications. Acceptance without comment, of the shop drawings or samples included as part of a Submittal shall not relieve the Developer of responsibility for any deviation from the requirements of the Accepted Plans and Specifications or from responsibility for errors or omissions in such shop drawings or samples.

12.3 Correction and Resubmission. The Developer shall make any corrections required to a Submittal and shall resubmit the required number of corrected copies of the Submittals promptly so as to avoid delay. The Developer shall inform TxDOT through the TDR in writing of any new revisions other than the corrections requested on previous submissions. Upon completion of the Developer's Architect/Engineer review process of each submittal, the Developer shall provide one (1) set each to TxDOT and the TDR for final review and written response within one (1) state business day**.**

12.4 Distribution of Submittals. The Developer shall not distribute any Submittal for the purpose of fabrication or procurement of materials until the process described herein is complete.

SAMPLE DRAFT

12.5 Intent of Accepted Plans and Specifications. There is no intent that these documents limit materials, equipment or fixtures to the product of any particular manufacturer. Where definite materials, equipment and/or fixtures have been specified by name, manufacturer or catalog number, it has been done to set a definite standard and a reference for comparison as to quality, application, physical conformity, and other characteristics. It is TxDOT's and the Developer's intention to not discriminate against or prevent any dealer, jobber or manufacturer from furnishing materials, equipment, and/or fixtures which meet or exceed the characteristics of the specified items. Substitution of materials shall not be made without prior written approval from TxDOT, which approval shall not be unreasonably withheld or unduly delayed. If Developer disputes TxDOT's refusal to approve any such substitution, Developer shall nevertheless use the item designated by TxDOT but may assert a claim for a Change Order for increased cost or schedule delay incurred by reason of any unreasonable disapproval of substitution by TxDOT, which claim shall be resolved under Article XXVI.

12.6 Unauthorized Substitutions at Developer's Risk. All proposed substitution of materials, equipment or fixtures shall be presented through the submittal process except as permitted under Section 21.4. The Developer shall be financially responsible for any additional costs or delays resulting from using materials, equipment or fixtures other than those specified, and shall reimburse TxDOT for any increased administration costs resulting from such unauthorized substitutions. TxDOT shall provide the Developer with an itemized accounting of its costs due to unauthorized substitutions, which shall be paid by the Developer within ten (10) days of its receipt.

Article XIII - Quality Control and Quality Assurance During Construction

13.1 Developer Quality Control. The Developer is responsible for controlling the quality of the work.

13.2 TxDOT Quality Assurance.

13.2.1 Site Visits. The Developer shall provide sufficient, safe and proper facilities at all reasonable times for observation and/or inspection of the Work by the authorized representatives of TxDOT. The TDR will perform weekly construction observations with written reports transmitted in a timely manner. The Developer shall schedule specific TDR or TxDOT observations prior to materials being covered without access for future visual observation. The Developer shall allow two (2) business days for the TDR or TxDOT to observe the Work so as not to delay the progress. These include but are not necessarily limited to the following:

1. Below grade site utilities, including storm and sanitary sewer, domestic water, storm sewer, electrical service, mechanical systems piping,

SAMPLE DRAFT

communications conduit all prior to placement and subsequently backfilling.

2. Installation of below building slab piping, mechanical, plumbing, and electrical systems and all specialty conduits.
3. Site pavement reinforcing prior to placement of concrete.
4. Structural reinforcing prior to placement of concrete inclusive of structural foundations.
5. Inspect all partitions before cover up (2-sided).
6. Inspect above all ceilings before cover up (ceiling tile or other material).
7. Metal decking prior to placement of roofing insulation or finish materials.
8. Roof insulation prior to placement of roofing membrane or standing seam metal roof.
9. Initial through-wall flashings and air –space cavity prior to placement of exterior skin materials.
10. Inspection of piping prior to placement of insulation.

13.2.2 Cost of Unauthorized Covering of Work. The Developer shall not cover up any work in Section 13.2.1 with finishing materials or other building components prior to an inspection of the work by TxDOT. Should corrections of such work be required, cover up shall be delayed until another inspection can be made and acceptance is indicated. Costs of delays, inspection and testing shall be borne pursuant to Article XI.

13.2.3 Notice. The Developer shall be responsible for providing notification of at least two (2) full state business days to TxDOT of the anticipated need for a cover up inspection required under Section 13.2.2. TxDOT will make the necessary inspection within the two (2) working day period, or as mutually agreed.

13.3. Condemnation and Removal of Defective Work. The TDR may recommend to reject and condemn Work, which does not meet the requirements of the Accepted Plans and Specifications and to order such work removed and replaced in accordance with this Article XIII. The acceptance of a work item does not relieve the Developer from compliance with the Accepted Plans and Specifications where such requirements are not judged at the time of observation of the Work due to work sequences by the Developer or the lack of time to judge the performance characteristics of the particular work item. If any materials or Work furnished are condemned by TxDOT, the Developer shall, after notice from TxDOT, proceed to remove materials, whether worked or unworked, and to take down all portions of the Work condemned. The Developer shall make good all Work damaged or destroyed by its removal and replacement process. Upon notice of condemnation, the Developer may challenge its responsibility for costs under such determination or may assert a claim for Change Order for increased cost or adjustment to the Project Schedule, in which event such dispute shall be resolved under Article XXVI.

SAMPLE DRAFT

Article XIV – Development and Exchange Agreement Payments

14.1 Contract Sum. As full compensation for the Work, the Developer shall be paid by the fixed price stipulated by value of the real property being exchanged ($1,601,914.00) (the "Contract Sum"). Except as specifically provided herein, the Contract Sum shall not be adjusted. Payment of the Contract Sum shall be paid to the Developer monthly on a percentage completed basis as Work progresses in accordance with the provisions of this **Development and Exchange Agreement**. Increases or decreases in the Contract Sum as a result of approved Change Orders Sum (calculated in accordance with Article XXI), or as otherwise provided in this **Development and Exchange Agreement**, shall be paid to Developer or TxDOT, as applicable, in accordance with the provisions of this **Development and Exchange Agreement**. Decreases in the Contract Sum shall first be applied to increases in the Contract Sum. Any remaining amounts due from TxDOT for increases in the Contract Sum pursuant to approved Change Orders shall be paid by TxDOT to Developer as work progresses. TxDOT shall retain five percent (5%) of the total cost of the Project until acceptance of the Project pursuant to Transportation Code §223.010. Any amounts due TxDOT from the Developer shall be deducted from the retained amount. If the amount due TxDOT is greater than the retained amount, Developer shall pay TxDOT this amount at closing. **Closing shall not proceed until all disputes regarding the Development and Exchange Agreement have been resolved in accord with Article XXVI.**

14.2 Schedule of Values. Attached hereto as Exhibit D is a Schedule of Values for the Work. The Exhibit D Schedule of Values will be used as the basis for the progress payments of the Contract Sum by the Trustee.

14.3 Progress Payments. Monthly progress payments will be made to the Developer for Work performed, and materials in place or suitably stored and protected on sites on a percentage completed basis. Payment shall become due ten (10) days after the Periodic Invoice, certified by the Developer and Architect/Engineer of record, is delivered to the *TDR and TxDOT.* If TxDOT in good faith believes that Developer is not entitled to the payment of all or any portion of the Periodic Invoice and gives written notice of such objection within such 10-day period, specifying the grounds on which TxDOT is objecting, TxDOT shall withhold the disputed amount until TxDOT and the Developer have given written notice confirming resolution of such dispute or such dispute is otherwise resolved under Article XXVI.

14.3.1 Preliminary Pay Worksheet. Each month, the Developer shall submit to TxDOT, with copy to the TDR, a complete, clean copy of a Preliminary Pay Worksheet, which shall attach the following:

SAMPLE DRAFT

a. The Developer's estimate of the percentage amount of Work performed, labor furnished and materials incorporated into the Work, using the approved Schedule of Values; and

b. A Project Schedule update and HUB Subcontracting Plan Reports in the form as that attached hereto as Exhibit H.

14.3.2 Developer's Periodic Invoice. As soon as practicable, but in no event later than seven (7) days after receipt of the Preliminary Pay Worksheet, TxDOT and the TDR shall meet with the Developer to review the Preliminary Pay Worksheet and to observe the condition of the Work. On the basis of this review, the TDR may require modifications to the Preliminary Pay Worksheet prior to the submittal of a Periodic Invoice consistent with the provisions of this **Development and Exchange Agreement,** and shall return the Preliminary Pay Worksheet to the Developer at the close of the Periodic Invoice review meeting. The TDR shall annotate the Preliminary Pay Worksheet to show any such required modifications, and any additional documentation required by TxDOT to support the Developer's application for payment, consistent with the provisions of this **Development and Exchange Agreement.** As soon as practicable, but in no event later than seven (7) days following the Periodic Invoice review meeting, the Developer shall submit to the TxDOT, a Periodic Invoice reflecting required modifications with all additional documentation required by TxDOT to substantiate the percentage of completion of the Work, as well as an affidavit swearing or affirming that all payrolls, bills for labor, materials, equipment, subcontracted work or other indebtedness connected with the Developer's Periodic Invoice have been paid or will be paid within the time specified in Chapter 2251, Government Code. No Periodic Invoice shall be complete unless it fully reflects all required modifications, and attaches all required documentation including the Developer's affidavit. Documentation for invoices, modifications and all records relating to the Work shall comply with Government Code Chapter 2155, Subchapter F and state audit and accounting rules which may be accessed by contacting the State Auditor's Office through the internet at www.sao.state.tx.us.

14.3.3 State Audits. Pursuant to Government Code §2262.003, a state auditor may conduct an audit or investigation of any entity receiving funds from the state directly under this **Development and Exchange Agreement** or indirectly through a subcontract. Acceptance of funds under the **Development and Exchange**

SAMPLE DRAFT

Agreement acts as acceptance of the authority of the state auditor to conduct an audit or investigation in connection with these funds.

14.3.4 Certification by the Developer. The Developer shall forward with the Periodic Invoice to TDR, a certificate that the percentage of Work represented by the Periodic Invoice is complete and payable, or that it is incomplete, stating in particular what is missing. If the Periodic Invoice is incomplete, the Developer shall make the required modifications and resubmit the Periodic Invoice to the TxDOT for processing in accordance with this Section14.3.

14.4 Retainage and Reduction to Cover Loss. TxDOT shall withhold from each progress payment, a retainage pursuant to Transportation Code Sections 223.009 and 223.010 (5% of the contract price or 4% if recycled materials are used). This term is subject to Section 15.5 herein.

14.5 Title to Work. Title to all material and Work covered by progress payments transfers to the Lessor upon payment. Transfer of title to the Lessor does not relieve the Developer of the sole responsibility for the care and protection of materials and work upon which payments have been made, or the restoration of any damaged work, or waive the right of TxDOT to require the fulfillment of all the terms of the **Development and Exchange Agreement**; provided that upon occupancy, TxDOT shall assume responsibility for the improvements.

14.6 No Release of Developer. Progress payments to the Developer shall not release the Developer or his surety from any obligations under this **Development and Exchange Agreement**.

Article XV - Closing Inspections

15.1 Substantial Completion Inspection. When the Developer considers the entire Work for each phase Substantially Complete, the Developer shall so notify the TDR in writing that the Work will be ready for Substantial Completion inspection. On the date indicated by Developer, or as soon thereafter as is practicable, the TDR, Developer, and Architect/Engineer shall inspect the Work and if the Architect/Engineer determines that the Work is Substantially Complete, the Architect/Engineer shall issue to the Developer and TxDOT, a Certificate of Substantial Completion fixing the date of Substantial Completion. The Architect/Engineer shall submit with this certificate a list of Punch List Items to be completed prior to Final Inspection. This list of Punch List Items may include additional items not included on the Developer's list provided under Section 8.7.7, which are deemed necessary by the Architect/Engineer and TxDOT to correct or complete prior to Final Inspection. Notwithstanding the foregoing, if TxDOT in good faith disagrees with the determination of the Architect/Engineer that Substantial Completion of the Work has been achieved and delivers written notice of such objection

SAMPLE DRAFT

within ten (10) days after receipt of such certification, specifying the grounds on which TxDOT believes that Substantial Completion has not been achieved, Substantial Completion shall not be established until such dispute is resolved in accordance with the provisions of Article XXVI, hereof.

15.2 Final Inspection. The Developer shall fully complete the list of items listed on the Punch List prior to Final Inspection. Unless otherwise agreed in writing by the parties, the Developer shall complete the Punch List Items within the time period set forth in Section 8.7.7. When the Developer has completed the Punch List, he shall give written notice to the TDR that the Work will be ready for Final Inspection on a date certain. On this date, or as soon thereafter as is practicable, the TDR, Architect/Engineer, and the Developer shall inspect the Work.

15.3 Final Punch List. When all the Punch List Items have been completed, and the Work is fully performed, then the Architect/Engineer shall issue a certificate fixing the date of Final Completion. Final Completion shall be a condition precedent to the Developer's right to receive Final Payment.

15.4 Annotation. Any Certificate issued under this Article may be annotated to indicate that it is not applicable to specified portions of the Work.

15.5 Purpose of Inspection. Inspection by TxDOT, the Architect/Engineer and the Developer is for the purpose of determining the completion of the Work, and does not relieve the Developer of its overall responsibility for completing the Work in a good and workmanlike fashion, in compliance with the **Development and Exchange Agreement**. Failure of TxDOT to identify Work that is not in compliance or which is defective in operation or workmanship, or acceptance by TxDOT of Final Completion of the Work with Punch List Items left incomplete, does not constitute a waiver of such a defect or of TxDOT's rights under the **Development and Exchange Agreement** nor relieve the Developer of its warranties contained in Article XI and Article XVIII. If TxDOT accepts Final Completion of the Work with Punch List Items left incomplete, TxDOT may withhold from the Final Payment an amount equal to three (3) times the reasonably estimated cost of completing any such unfinished Punch List Item, as reasonably estimated by the Architect/Engineer and approved by TxDOT.

15.6 Certificate of Final Completion. Upon issuance of the Architect/Engineer's certificate fixing the date of Final Completion under Section 15.3, hereof, TxDOT shall execute and deliver Certificate in the form as that attached hereto as Exhibit K; provided that, if TxDOT in good faith disagrees with the determination of the Architect/Engineer that Final Completion has been achieved and delivers written notice of such objection within ten (10) days after receipt of such certification, specifying the grounds on which TxDOT believes

SAMPLE DRAFT

that Final Completion has not been achieved, Final Completion shall not be established until such dispute is resolved in accordance with the provisions of Article XXVI, hereof.

ARTICLE XVI - RIGHT OF OCCUPANCY

16.1 Occupancy of Work Prior to Substantial Completion.

16.1.1 Notice and Early Occupancy Proposal. If TxDOT determines that substantial hardship will result if it is unable to occupy some portion of the Work prior to Substantial Completion, it shall so inform the Developer no less than ninety (90) days before the date TxDOT wishes to occupy the Work, and designate those portions of the Work to be occupied and the uses to be made of the occupied premises. As soon as practicable, but not less than five (5) working days after receiving this notice, the Developer shall make the designated portions of the Work available to TxDOT for observation. TxDOT shall observe the Work jointly with the Developer. As soon as practicable, but not later than the third day next following the date of the inspection, the Developer shall prepare and submit to the TDR an Early Occupancy Proposal, specifying any Work that must be completed or corrected as well as any operation and maintenance manuals or other documentation necessary for the Work to be occupied by TxDOT and used for the purposes designated by TxDOT in its notice, and setting out the division of responsibility between TxDOT and the Developer for utilities, security, maintenance, insurance and liability for damage to the Work or damage arising from the condition of the Work. The Early Occupancy Proposal shall also specify whether the area to be occupied must be Substantially Complete before occupation, and shall specify the date for Substantial Completion of the Work to be occupied if other than the date previously specified by the **Development and Exchange Agreement**.

16.1.2 Administration as Change Order. The Early Occupancy Proposal shall be administered as a Change Order, except that the Developer shall submit a CPE as soon as possible, but not later than the seventh day next following receipt of the Early Occupancy Proposal. All cost adjustment, including any increased costs of insurance, related to the Early Occupancy Proposal, shall be stated in the CPE; any such relief not so requested shall be deemed waived. If within thirty (30) days after issuance of the Early Occupancy Proposal, TxDOT and Developer have not reached an agreement concerning adjustment of time or cost, or the division of

SAMPLE DRAFT

responsibility for the occupied portions of the Work, TxDOT may issue a ULCO.

16.1.3 Project Completion Administration with Early Occupancy. Where under the provisions of this Article the Project Schedule is modified for any part of the Work due to early occupancy, then the provisions of §15.6 shall not apply. All required documentation shall be furnished by the Developer to the TDR on or before the date of occupation by TxDOT.

16.1.4 Non-waiver of Timely Completion. Early occupancy of any portion of the Work does not waive the Developer's duty to complete the remaining Work within the Project Schedule, as subsequently modified by Change Order.

Article XVII - Final Acceptance and Payment

17.1 Request for Final Payment. At any time following the date of Final Completion certified by the Architect/Engineer, but no later than thirty (30) days after such date, the Developer shall submit a certified Application for Final Payment, including all sums held as retainage, if any, to the Architect/Engineer, with copy to the TDR, for review and approval by TxDOT as set forth herein**.**

17.2 Final Payment Documentation. The Developer shall submit, prior to or with the Application for Final Payment, all Close Out documents. The Developer shall also submit an affidavit that all payrolls, bills for materials and equipment, contracted/subcontracted work and other indebtedness connected with the Work have been paid or will be paid or otherwise satisfied within the period of time required by Chapter 2251, Texas Government Code. If required by TxDOT, the Developer shall furnish documentation establishing payment or satisfaction of all such obligations, such as receipts, releases and waivers of claims arising out of the **Development and Exchange Agreement**, to the extent and in such form as may be reasonably designated by TxDOT.

17.3 Review. The Architect/Engineer and TDR shall review the Application for Final Payment promptly but in no event later than ten (10) days after its receipt. Prior to the expiration of this deadline, the TDR upon direction from TxDOT may return the Application for Final Payment to the Developer with TxDOT's requested corrections for action. If Developer timely receives any request for correction, Developer shall make such corrections and resubmit the Application for Final Payment. If Developer disputes any request by TxDOT for correction of the Application for Final Payment, such dispute shall be resolved in accordance with the provisions of Article XXVI, hereof. If TxDOT does not timely request correction of the Application for Final

SAMPLE DRAFT

Payment, within such ten (10) day period, TxDOT shall be deemed to have approved the same.

17.4 Offsets and Deductions. TxDOT may in writing direct the a deduction from the Final Payment all sums due from the Developer hereunder. If the Certificate of Final Completion notes any Work remaining incomplete or defects not remedied, TxDOT may in writing direct to deduct the reasonable cost of remedying such deficiencies from the Final Payment as estimated by the Architect/Engineer and TDR. If such deductions are made, TxDOT shall identify each deduction made and furnish the Developer with an explanation of each deduction and the amount deducted on or by the twenty-first (21st) day after TxDOT's receipt of the Application for Final Payment.

17.5 Final Payment Due. TxDOT shall make the Final Payment subject to all allowable offsets and deductions, on the thirty first (31st) day next following the receipt of the Application for Final Payment approved by the Architect/Engineer and TDR. If the Developer disputes any amount deducted by TxDOT, the Developer shall give notice of the dispute on or before the thirtieth (30th) day next following receipt of Final Payment; failure to do so will bar any subsequent claim for payment of amounts deducted. TxDOT shall withhold the amount in dispute until its disposition under Article XXVI.

17.6 Effect of Final Payment. Final Payment shall constitute a waiver of all claims by TxDOT relating to the condition of the Work except those arising from (1) faulty or defective Work appearing after Substantial Completion (latent defects); (2) failure of the Work to comply with the requirements of the **Development and Exchange Agreement**; (3) terms of any special warranties required by the Contract Documents, and (4) claims arising from personal injury or property damage to third parties. Final payment shall constitute a waiver of all claims by the Developer except those specifically enumerated at the time of Final Payment. However, the **Development and Exchange Agreement** shall be deemed fully performed and closed upon the expiration of all periods provided under the **Development and Exchange Agreement** for the Developer to submit a claim or protest a ULCO.

Article XVIII – Developer's Warranty and Guarantee

18.1 Developer's General Warranty and Guarantee. The Developer warrants to TxDOT that all Work shall be executed in accordance with the **Development and Exchange Agreement**, complete in all parts and in accordance with approved practices and customs, and in good workmanship. This warranty shall continue in effect for twelve (12) months after the close of the performance period for the **Development and Exchange Agreement** has ended as stated in Section 17.6 herein. All materials and equipment incorporated in the Work under the **Development and Exchange**

SAMPLE DRAFT

Agreement shall be new. TxDOT may, at its option, agree in writing to waive any failure of the Work to conform to the **Development and Exchange Agreement**, and to accept a reduction in the Contract Sum for the cost of repair or diminution in value of the Work by reason of such defect. Absent such a written agreement, however, the Developer's obligation to perform and complete the Work in accordance with the **Development and Exchange Agreement** shall be absolute and is not waived by any inspection or observation by TxDOT, the TDR or others, by making any progress payment or final payment, except as provided in Section 17.6, by the use or occupancy of the Work or any portion thereof by TxDOT, at any time, or by any repair or correction of such defect made by TxDOT.

18.2 Warranty Period. The respective warranty periods shall begin upon the issuance of Substantial Completion. Except as otherwise specified, the Developer shall repair all defects in materials, equipment or workmanship appearing within one (1) year from the date of Substantial Completion of the Work. Upon receipt of written notice from TxDOT of the discovery of any defects, the Developer shall promptly and at its own cost remedy the defects and replace any damaged property. In case of emergency where delay would cause serious risk of loss or damage to TxDOT, or if the Developer, after notice, fails to proceed promptly and remedy within thirty (30) days. If such defect cannot reasonably be cured within such thirty (30) days, or within such period of time as may have been agreed to as reasonably necessary to cure such defect, TxDOT may have the defects corrected and the Developer shall be liable for all expenses incurred.

18.3 Separate Warranties. Where a particular piece of equipment or component of the Work for which a separate warranty is required under the **Development and Exchange Agreement** is placed in continuous service before Substantial Completion, the date of service commencement shall be the date of Substantial Completion for the portion of the work serviced by the particular piece of equipment or component. In addition to the Developer's warranty and duty to repair, as set forth in §§18.1 and 18.2, the Developer expressly assumes all warranty obligations required under the **Development and Exchange Agreement** for specific building components, systems and equipment. The Developer may satisfy any such obligation by obtaining and assigning to TxDOT a complying warranty from a manufacturer, supplier, or contractor/subcontractor. Where an assigned warranty is tendered and accepted by TxDOT which does not fully comply with the requirements of the **Development and Exchange Agreement**, the Developer shall remain liable to TxDOT on all elements of the required warranty that are not provided by the assigned warranty.

SAMPLE DRAFT

Article XIX- Good Faith Effort Subcontractor Program (HUBs)

19.1 General Program Description. State agencies are required by statute to make a good faith effort to assist Historically Underutilized Businesses (HUBs) in participating in **Development and Exchange Agreement** awards issued by the State. TxDOT's rules, Texas Administrative Code, Title 43, Part Chapter 9, Subchapter D, outline the TxDOT's policy to encourage outreach to and potential utilization of HUBs in subcontracting opportunities through race, ethnic, and gender neutral means. The goal of this program is to promote full and equal business opportunity for all businesses in state contracting.

A Developer who contracts with the State in an amount in excess of $100,000 shall be required to make a good faith effort to award subcontracts to HUBs in accordance with the cited rules by submitting a HUB Subcontracting Plan and complying with the Subcontracting Plan after it is accepted by TxDOT and during the term of the **Development and Exchange Agreement**. The program goal for this Project is fifteen (15) percent.

19.2 Compliance with Approved HUB Subcontractor Plan. The Developer, having been awarded this **Development and Exchange Agreement** in part by complying with the HUB Program statute and rules, hereby covenants to continue to comply with the HUB Program as follows.

The Developer shall:

a. Prior to substituting a Subcontractor, promptly notify TxDOT in the event a change is required for any reason to the accepted HUB Subcontracting Plan;

b. Conduct the good faith effort activities required and provide TxDOT with necessary documentation to justify approval of a change to the approved HUB Subcontracting Plan;

c. Cooperate in the execution of a Change Order or such other approval of the change in the HUB Subcontracting Plan as the Developer and TxDOT may agree to;

d. Maintain and make available to TxDOT upon request business records documenting compliance with the accepted HUB Subcontractor Plan;

e. Upon receipt of payment for performance of Work, the Developer shall submit to TxDOT a compliance report, in the format as that attached hereto as Exhibit H, that demonstrates Developer's performance of the HUB Subcontractor Plan; and

SAMPLE DRAFT

f. Promptly and accurately explain and provide supplemental information to TxDOT to assist in TxDOT's investigation of Developer's good faith effort to fulfill the HUB Subcontractor Plan.

19.3 Failure to demonstrate Good Faith Effort. Upon a determination by TxDOT that the Developer has failed to demonstrate a good faith effort to fulfill the Subcontractor Plan or any **Development and Exchange Agreement** covenant detailed above, TxDOT may, in addition to all other remedies available to it, report the failure to perform to the Texas Building and Procurement Commission's Vendor Performance and Debarment Program.

Article XX - Concealed Site Conditions

20.1 Developer's Duty to Inspect. The Developer is responsible for having visited the Site and having ascertained pertinent local conditions such as location, accessibility, and general character of the Site and the character and extent of environmental hazards or contamination at the time of the submission of its proposal. Any failure to do so will not relieve it from responsibility for successfully performing the Work without additional expense to TxDOT.

20.2 Unknown Conditions. If, in the performance of the **Development and Exchange Agreement**, subsurface, latent or concealed conditions (other than Force Majeure) at the Site are found to be materially different from the information provided through the Developer's due diligence and from data available from the applicable utilities, or if unknown conditions of an unusual nature are discovered differing materially from the conditions usually inherent in Work of the character shown and specified, TxDOT shall be notified in writing of such conditions before proceeding with the Work. Developer shall develop a plan to deal with the condition and submit the same to TxDOT, and, if as a result of any such unforeseen condition, Developer incurs any additional cost in completing the Work or if the Project Schedule will be delayed, the parties shall execute a Change Order to adjust the Contract Sum and/or Contract Time, as appropriate.

Article XXI - Change Orders

21.1 Effect. A Change Order is a written agreement, prepared by TxDOT, and entered into by the Developer and TxDOT after execution of the **Development and Exchange Agreement**. Only Change Orders signed by TxDOT's following staff: Director, Maintenance Division; Director, Maintenance Section, Maintenance Division; or Director, Facilities Management Section, Maintenance Division will allow an increase or decrease in the contract sum, increase or decrease in the original scope of work or an increase in the construction timetable. Authorization to sign a Change Order is reserved exclusively to TxDOT and may not be delegated to

SAMPLE DRAFT

a private firm under contract to TxDOT. A Change Order signed by the Developer indicates its agreement with the modifications described in the Change Order, including the actual cost to accomplish the work and/or any adjustment in the construction timetable.

21.2 Adjustments (other than Final Payment under Article XVII). TxDOT, without invalidating the **Development and Exchange Agreement**, may order changes in the work consisting of additions, deletions, or other revisions. All such changes in the scope of work must be authorized by Change Order, and performed under the applicable conditions of the **Development and Exchange Agreement**. If such changes cause an increase or decrease in the Developer's costs, or an increase in the time required for performance of the work, a mutually agreeable adjustment should be made and confirmed in writing by Change Order. Overhead and profit can be included in the costs associated with work performed by Change Order. Any savings in overhead and profit, and other costs as a result of any Change Order must be returned to TxDOT in a deductive Change Order. Change Orders must be signed by all parties prior to starting any work covered by the Change Order. If a surety has assumed the responsibilities of the Developer, TxDOT may pay the surety for the Developer's profit and overhead, but it will not pay the surety any profit or overhead. Any increase or decrease in the Contract Sum, increase or decrease in the Contract Time and changes in the scope of work require the signature of an authorized representative of TxDOT.

21.3 Unilateral Change Orders. TxDOT, without invalidating the **Development and Exchange Agreement**, may issue unilateral change orders for work it considers necessary for the completion of the Project. A ULCO is effective on receipt by the Developer and obligates the Developer to perform the Work according to its terms. TxDOT shall pay to Developer all increased costs incurred by Developer in performing the Work required under such ULCO and Developer shall be entitled to an extension of the Contract Time, to the extent of any delay caused by such ULCO. If TxDOT and Developer are not able to agree on a Change Order adjusting the Contract Sum and Contract Time as a result of any such ULCO, any such dispute shall be resolved in accordance with the provisions of Article XXVI. The Developer shall perform the Work under the ULCO regardless of the dispute.

21.4 No Cost Changes. Notwithstanding anything contained herein to the contrary, Developer shall have authority to make non-material changes (not material in relation to the intent of this **Development and Exchange Agreement** and Project Schedule) in the design and construction consistent with the intent of this **Development and Exchange Agreement** and not involving an extension of the Delivery Dates or adjustment in the Contract Sum; provided that Developer shall give TxDOT and the TDR five (5) days written notice of each such change under this Section 21.4. In addition,

SAMPLE DRAFT

TxDOT may request that Developer make a nonmaterial change (not material in relation to the intent of this **Development and Exchange Agreement** and Project Schedule) in the design and construction consistent with the intent of this **Development and Exchange Agreement** and not involving an extension of the Delivery Dates or adjustment in the Contract Sum.

21.5 Valuation of Change Orders. The value of changes in the work, either additive or deductive, executed under a Change Order, shall be determined in one of the following ways:

(1) By acceptance of a lump sum proposal as defined by the following paragraphs.

a. Developer shall furnish TxDOT an itemized breakdown, in such detail and form as acceptable to TxDOT, of all costs and supporting information including but not limited to quantities, material prices, tier subcontracted work performed, labor rates and employer payments, and rental rates. The itemized breakdown detail shall be the same for any Subcontractor work. The Developer shall furnish TxDOT the following additional information in the itemized breakdown: Insurance charges and bond charges used in computing the lump sum proposal. This information shall also be provided for any Subcontractor work.

b. Costs shall include: Labor cost, including all classifications through foremen when engaged in the actual and direct performance of the work, and actual employer payments to or on behalf of workers for health and welfare, pension, vacation, insurance, and any similar charges imposed by law or required by applicable collective bargaining agreements; materials, installed permanently in the work or expended in performance thereof; rental cost of construction plant and equipment at the work site; energy, fuel, and supplies consumed in operation of power-drive equipment; insurance, necessary design and professional consulting fees and further revisions of previously finalized shop drawings and/or fabrication drawings.

c. Costs shall not include: (these costs shall be considered a part of overhead and profit or markups) Labor for superintendents, assistant superintendents, office personnel (home and field), timekeepers, and maintenance mechanics at any level of contracting; per diem and travel allowances for any of the aforementioned labor classifications; pieces of equipment, hand tools, or instruments having a new value of $500.00 or less, whether or not consumed by use; safety programs; on site and main offices and operating costs; modifications to record drawings; guarantee period cost allowances; and punch list allowances.

SAMPLE DRAFT

d. For subcontracted work the Subcontractor will be allowed to add to the costs, as defined in subsection 21.5(1)b., overhead and profit for an amount not to exceed the following percentages. Fifteen percent (15%) on the first $10,000, twelve percent (12%) on the balance over $10,000.

e. To the total cost of subcontracted work the Developer will be allowed to add the cost of any additional required Builders Risk Insurance. To this total the Developer will be allowed to add an amount not to exceed five percent (5%) for the Developer's overhead and profit for changed work. To this total the Developer will be allowed to add the cost of any additional required Bond.

f. On changes involving both additions and deletions, percentages for overhead and profit will be allowed only on the net addition.

(2) By unit prices named in the **Development and Exchange Agreement** or subsequently agreed upon.

21.6 Developer's Risk of Performance. Except as expressly provided in this Article XXI, the Developer shall not be entitled to an increase in the Contract Sum or the Contract Time and shall bear full responsibility for all risks affecting the Developer's cost of performance.

Article XXII - Administration of Change Order Requests

22.1 Requests for Changes.

22.1.1 Time Extension Requests. All relief related to excusable and compensable delays, including monetary compensation for the any delay not caused by the Developer, shall be governed by the provisions of Article XXIV, and any time extension granted or compensation for delay shall be made pursuant to that Article. A single Change Order may be issued, adjusting both Contract Time and Contract Sum, where both arise from the same claim.

22.1.2 Requests for Cost Adjustment. All requests for adjustment in the Contract Sum shall be made as follows:

When TxDOT wishes to order changes in the Work, the TDR shall submit to the Developer a Change Order Request (COR), consisting of a description of the request, including any sketches and description of the work as are reasonably necessary to inform the Developer of the nature of the change. Within Fifteen (15) days of receipt of TxDOT's COR, the Developer shall submit a

SAMPLE DRAFT

Change Order Proposal Evaluation (CPE) to the TDR, stating that the proposed change is a no-cost change, or proposing an adjustment in the Contract Sum.

22.2 Processing Requests for Change.

22.2.1 Response to CPE. As soon as possible, but not more than ten (10) days after receipt of any CPE submitted by the Developer, TxDOT shall respond in writing by either (1) issuing a Change Order, (2) rejecting the same, (3) initiating negotiations with the Developer concerning the proposed cost adjustment and completing those negotiations within five (5) business days, or (4) requesting additional information.

22.2.2 Change Orders as Amendments. All effective change orders constitute amendments to the **Development and Exchange Agreement**.

Article XXIII - Time Allotted for Performance; Construction Schedules

23.1 Construction Timetable. The Contract Time will be measured from the date hereof to the Delivery Dates for each phase of the Work, including any modification by Change Order. Failure to achieve Substantial Completion of the Work within the Contract Time will subject the Developer to Liquidated Damages as provided in Section 8.7.3.

23.2 Project Schedule. The Project Schedule attached hereto as Exhibit G shows the dates for starting and completing the various component activities making up the Work, and the logical relationships between them. The Developer shall also provide to the TDR for informational purposes a more detailed construction schedule utilizing the Critical Path Method which shall be in a format and in sufficient detail to permit the Work to be competently managed and its progress monitored. This more detailed construction schedule shall incorporate a schedule for Non-Developer Work, if and to the extent the TDR provide to Developer appropriate information with regard to the scope and schedule for such Non-Developer Work. The Developer shall also submit to the TDR for informational purposes a separate schedule, correlated with the Project Schedule that shows the dates the Developer intends to make all required submittals.

23.2.1 Schedule Updates. The Project Schedule shall be updated not less than once a month to reflect progress to date, and current plans for completing the Work. The updated Project Schedule shall be submitted to TxDOT for review. or, if Developer is two or more months behind in updating such Project Schedule, to withhold all

SAMPLE DRAFT

further payments until the updated Project Schedule is updated**.** The Developer shall show the anticipated date of completion reflecting all extensions of time granted as of the date of the update. The Project Schedule shall constitute the Developer's representation to TxDOT, the TDR, that the Developer will follow the schedule as submitted and that all progress to date shown on the schedule is accurately depicted. Upon notice to TxDOT, the Developer may revise the Project Schedule at any time when, in the Developer's judgment, it becomes necessary for the management of the Work, provided there is no increase in Contract Time or Contract Sum.

23.2.2 Effect of Schedule Submittal. Submittal of the Project Schedule, and successive updates or revisions is for the information of TxDOT and to permit the coordination of their activities with those of the Developer. TxDOT's review of a Project Schedule, update or revision does not indicate the approval of the Developer's proposed sequences and duration. TxDOT's review of a Project Schedule update or revision indicating late completion does not constitute consent to a late finish, or waive either the Developer's responsibility for timely completion or TxDOT's right to damages for the Developer's failure to do so.

23.2.3.1 Ownership of Float. Float time contained in the Project Schedule is for the exclusive benefit of the Developer except it will be allocated to TxDOT at no cost, to the extent it exists, for non-developer work and early occupancy.

Article XXIV - Modification of Contract Time

24.1 Delays of and Extension of Time. The Developer may be granted an extension of time because of Change Orders, Force Majeure or any cause beyond the Developer's control. The Developer's compensation in the event of Force Majeure or any cause beyond the Developer's control not caused by TxDOT or Non-Developer Work shall be Developer's documented actual field costs for the period of delay. All Contract Time modifications must be reflected on the Project Schedule within thirty (30) days of TxDOT's approval.

24.2 Time Extension Requests. If the Developer believes that the completion of the Work has been delayed by a circumstance the Developer has reason to believe is not under its control, other than inclement weather, the Developer shall give TxDOT written notice, stating the nature of the delay and the activities potentially affected, within thirty (30) calendar days after the later of the onset of the event or circumstance giving rise to the delay or the date Developer first learns of such impact. Such claims should be accompanied

SAMPLE DRAFT

by sufficient written evidence to document the delay. In the case of a continuing cause of delay, only one claim is necessary. Claims for extensions of time shall be stated in numbers of whole calendar days. Claims for the cost of the Work Developer reasonably believes are associated with the delay shall be submitted in writing within thirty (30) calendar days after the later of the cessation of the cause of the delay or the date Developer firsts learns of such impact. The Developer and TxDOT recognize and agree that it is beneficial to each to identify delays and make necessary schedule adjustments promptly, and that a Project Schedule prepared and updated by the Developer provides an effective tool for measuring and tracking the impact of delays. All Changes to the Construction Timetable or Contract Sum made as a result of such claims shall be by Change Order, as provided under Article XXI.

24.2.1 Contents of Time Extension Requests. Each Time Extension Request shall be accompanied by a quantitative demonstration of the impact of the delay on project completion time, based on the current Project Schedule. Time Extension Requests shall include a reasonably detailed narrative setting forth (1) the nature of the delay and its cause, (2) the basis of the Developer's claim of entitlement to a time extension, (3) documentation of the actual impacts of the claimed delay, and any concurrent delays, (4) description and documentation of steps taken by the Developer to mitigate the effect of the claimed delay, including, when appropriate, the modification of the Project Schedule, and (5) such other information that the Developer considers necessary to justify its claim for an extension of time. No time extensions shall be granted for delays that do not affect the Project completion time.

24.2.2 TxDOT's Response. TxDOT shall respond to the Time Extension Request by providing to the Developer written notice of the number of days granted, and giving its reason if this number differs from the number of days requested by the Developer. Such an Extension of Time is effective on the date TxDOT's notice is received by the Developer, but a Change Order reflecting the Extension of Time shall be executed by the parties in accordance with Article XXI. TxDOT will respond to each properly submitted Time Extension Request within fifteen (15) calendar days following its submittal; if TxDOT cannot reasonably make a determination about the Developer's entitlement to a time extension within that time, TxDOT shall so notify the Developer in writing. Any dispute shall be resolved in accordance with Article XXVI.

24.3 Suspension of Work for Cause. TxDOT may, at any time without prior notice, suspend all or any part of the Work, if, in TxDOT's reasonable opinion, it is

SAMPLE DRAFT

considered reasonably necessary to do so to prevent or correct, any condition of the Work, which constitutes an immediate safety hazard, or which may reasonably be expected to impair the integrity, usefulness or longevity of the Work when completed. TxDOT shall give Developer written prior notice of any such determination and afford Developer at least thirty (30) days to cure or correct such condition. If such condition cannot reasonably be cured within such thirty (30) day period, such thirty (30) day period shall be extended for a reasonable period of time so long as Developer has within such thirty (30) day period commenced curing the same and thereafter diligently pursues curing the condition. TxDOT shall give the Developer a written notice of suspension for cause, setting forth the reason for the suspension and identifying the Work to be suspended. Upon receipt of such notice, the Developer shall immediately stop the Work so identified. As soon as practicable following the issuance of such a notice, TxDOT shall initiate and complete an investigation of the circumstances giving rise to the suspension, and shall issue a written determination of their cause. The Developer will not be entitled to an extension of time or compensation for delay resulting from a suspension if the cause was within the control of the Developer. Developer shall be charged liquidated damages and/or bear the cost of remedy, as appropriate. If the cause is determined not to have been within the control of the Developer, and the suspension prevents the Developer from completing the Work within the Construction Time, the Developer may be entitled to a Change Order increasing the Contract Sum and/or extending the Construction Time caused by any such suspension of Work. Suspensions of work under this provision shall be no longer than is reasonably necessary to identify and remedy the conditions giving rise to the suspension. If TxDOT and Developer do not agree on the validity of any Work stop order issued by TxDOT or on Developer's entitlement to an adjustment to the Contract Sum and/or Contract Time, such dispute shall be resolved pursuant to the provisions of Article XXVI.

Article XXV - Termination and Suspension of the Development and Exchange Agreement Prior to Completion

25.1 Termination by TxDOT for Cause. TxDOT may, without prejudice to any right or remedy terminate the employment of the Developer and take possession of the Site and of all materials, equipment, tools, construction equipment and machinery thereon owned by the Developer, under the following circumstances:

a. Persistent or repeated failure or refusal, except during complete or partial suspensions of work authorized under the Contract Documents, to supply enough properly skilled workmen or proper materials;

SAMPLE-DRAFT

b. Persistent disregard of laws, ordinances, rules, regulations or orders of any public authority having jurisdiction;

c. Persistent failure to prosecute the work in accordance with the **Development and Exchange Agreement**, and to insure its completion within the time, or any extension thereof, specified in this **Development and Exchange Agreement**;

d. Failure to remedy defective work condemned by the TDR pursuant to Article XIII;

e. Failure to pay subcontractors, laborers, materialmen and suppliers pursuant to Texas Government Code Chapter 2251;

f. Persistent endangerment, by the Developer or its Subcontractors or other vendors, of the safety of labor or of the Work itself;

g. Failure to supply or maintain statutory bonds, pursuant to Article V, or the supply or maintain required insurance, pursuant to Articles VI and VII; or

h. Any other material breach of the **Development and Exchange Agreement**.

TxDOT reserves the right to terminate at any time for any of the above listed causes. Failure to exercise the right to terminate in any instance or for any proper reason shall not be construed as waiver of the right to do so in any other instance or for any other proper reason.

25.1.1 The TDR shall give the Developer and its Surety thirty (30) days' prior written notice of its intent to terminate for any of the above reasons. If the Developer or the Surety demonstrates, to the reasonable satisfaction of TxDOT, that the condition or conditions upon which the notice of termination is based have been removed, corrected, or will not recur, within thirty (30) days after receipt of TxDOT's notice, provided that if any such default cannot reasonably be cured within such thirty (30) day period, such thirty (30) day period shall be extended for a reasonable period of time; provided, further, that Developer has within such thirty (30) day period commenced to cure such default and thereafter diligently pursues curing the same, then TxDOT shall rescind the notice and the **Development and Exchange Agreement** shall continue unmodified, and the Developer shall not be entitled an extension of time.

SAMPLE DRAFT

25.1.2 Should the Developer or the surety fail to so demonstrate within thirty days following receipt of such notice (or such longer period as may be reasonably necessary, so long as Developer or its surety is diligently pursuing such cure), or fail to reasonably satisfy TxDOT that the condition or conditions upon which the notice of termination is based have been removed, corrected, or will not recur, TxDOT may arrange for completion of the Work and deduct the cost thereof from the unpaid Contract Sum remaining, including the cost of additional Architect/Engineer services made necessary by such default or neglect, in which event no further payment shall then be made by TxDOT until all costs of completing the Work shall have been paid. If the unpaid balance of the Contract Sum exceeds the costs of finishing the Work, including compensation for the Architect/Engineer's additional services made necessary thereby, such excess shall be paid to the Developer. If such costs exceed the unpaid balance, the Developer or his surety shall pay the difference to TxDOT. This obligation for payment shall survive the termination of the **Development and Exchange Agreement**. In addition to any rights TxDOT may have against any surety, TxDOT reserves the right, where the **Development and Exchange Agreement** is terminated for cause, to take assignment of any and all contracts between the Developer and the Architect/Engineer and between the Developer and its Subcontractors, vendors and suppliers, and TxDOT shall promptly notify the Developer of the contracts TxDOT elects to assume, provided that upon assumption of such contracts by TxDOT, TxDOT shall be responsible for any and all further loss, liability, damage or expense arising under any such contracts assumed by TxDOT. Upon receipt of such notice, the Developer shall promptly take all steps necessary to effect such assignment.

25.1.3 TxDOT may also elect to rescind the **Development and Exchange Agreement** and pursue any of its legal remedies against Developer.

25.2 Termination by Developer. If the Work is stopped for a period of sixty (60) days under an order of any court or other public authority having jurisdiction, or as a result of an act of government, such as a declaration of a national emergency making materials unavailable, through no act or fault of the Developer or a contractor, subcontractor or their agents or employees or any other persons performing any of the Work under a contract with the Developer, then the Developer may, upon thirty (30) additional days' written notice to the TDR, terminate the **Development and Exchange Agreement** and recover from TxDOT payment for all Work executed and for any provable

SAMPLE DRAFT

loss and reasonable expenses attributable to the Work resulting from such termination. If the cause of the work stoppage is removed prior to the end of the thirty (30) day notice period, the Developer may not terminate the **Development and Exchange Agreement**.

25.3 Settlement on Termination. When the **Development and Exchange Agreement** is terminated for any reason, the Developer shall, at any time prior to one hundred eighty (180) calendar days of the effective date of termination, submit a final termination settlement proposal to TxDOT based upon recoverable costs as provided herein. If the Developer fails to submit the proposal within the time allowed, TxDOT may determine the amount due to the Developer because of the termination and shall pay the determined amount to the Developer. All settlements on termination shall be administered as a Change Order.

Article XXVI - Dispute Resolution

26.1 Contract Claim Committee. This committee shall resolve any claims between TxDOT and the Developer pursuant to Title 43 Texas Administrative Code Section 9.2. All claims shall be brought before the Contract Claim Committee in accord with this rule.

26.2 Condition Precedent to Formal Administrative Hearing.
Compliance by the Developer with subsection 26.1 is a condition precedent to the filing of a contested case proceeding under Government Code Chapter 2001.

26.3 Condition Precedent to Seeking Consent to Sue. Compliance with the contested case process provided in Government Chapter 2001 is a condition precedent to seeking consent to sue from the Legislature under Chapter 107 of the Texas Civil Practices and Remedies Code.

26.4 Continued Performance. Neither the occurrence of an event nor the pendency of a claim constitutes grounds for the suspension of performance by the Developer, in whole or in part.

Article XXVII – Miscellaneous

27.1 Written Notice. All notices, demands and other communications shall be in writing and may be faxed, hand delivered, sent by courier or United States certified or registered mail and respective proof of delivery shall evince receipt thereof on the date indicated to the parties, addressed as follows:

To Developer: ("**DEVELOPER NAME"**)
Address
City, State Zip

SAMPLE DRAFT

Attention: ("DAR")
Phone: (Area Code) Number
FAX: (Area Code) Number

Copy: Developer Contact Name
("**DEVELOPER NAME"**)
Street Address
City , State, Zip
Phone: (Area Code) Number
FAX: (Area Code) Number

To TxDOT: Texas Department of Transportation
MNT - Facilities Management
125 E. 11th Street
Austin, Texas 78701-2483
Attention: TDR NAME
Phone: (512) (NUMBER)
FAX: (512) 416-3078

27.2 Computation of Time. In computing any time period set forth in this **Development and Exchange Agreement**, the first day of the period shall not be included, but the last day shall be.

27.3 Survival of Obligations. All representations, indemnifications, warranties and guarantees made in accordance with the **Development and Exchange Agreement** Documents will survive final payment, completion and acceptance of the Work, as well as termination for any reason. All duties imposed upon the Developer by reason of termination, including without limitation the duty to assign contracts with contractors, subcontractors, vendors and suppliers, shall likewise survive the termination of the **Development and Exchange Agreement**.

27.4 No Waiver of Performance. The failure of either party in any instance to insist on the performance of any of the terms, covenants or conditions of the **Development and Exchange Agreement** Documents, or to exercise any of the rights granted thereunder, shall not be construed as waiver of any such term, covenant, condition or right with respect to further performance.

27.5 Governing Law. This **Development and Exchange Agreement** shall be governed by the law of the State of Texas.

27.6 Venue. Venue for any cause of action by either party shall be in a court of competent jurisdiction in **Bell** County, Texas.

SAMPLE DRAFT

27.7 Captions. The captions used throughout the **Development and Exchange Agreement** are for ease of reference only and have no effect on the meaning of the terms and conditions set forth herein.

27.8 Independent Developer Status. The **Development and Exchange Agreement** Documents create an independent Developer relationship between TxDOT and Developer and neither party's employees or Developers shall be considered employees, Developers, partners or agents of the other party.

27.9 No Third Party Beneficiaries. The parties do not intend, nor shall any clause be interpreted to create in any third party, any obligations to, or right of benefit by, such third party under these **Development and Exchange Agreement** Documents from either TxDOT or Developer.

27.10 Entire Agreement. These **Development and Exchange Agreement** Documents supersede in full all prior discussions and agreements (oral and written) between the parties relating to the subject matter hereof and constitutes the entire **Development and Exchange Agreement**.

27.11 Assignment. This **Development and Exchange Agreement** may not be assigned by either party without the prior written consent of the other, except either party may, upon notice to the other party but without the other party's consent, assign this **Development and Exchange Agreement** to a present or future affiliate or successor, provided that any such assignment by the Developer shall be contingent on ("**DEVELOPER NAME"**) Absolute Guaranty of performance by its assignee. TxDOT hereby consents to the assignment of ("**DEVELOPER NAME"**) interest under this Agreement to ("**DEVELOPER NAME"**) since ("**DEVELOPER NAME"**) shall execute and deliver its Absolute Guaranty to TxDOT of even date herewith.

27.12 Severability. If any provision, sentence, clause or article of this **Development and Exchange Agreement** is found to be invalid or unenforceable for any reason, the remaining provisions shall continue in effect as is the invalid or unenforceable provision were not in the **Development and Exchange Agreement**. All provisions, sentences, clauses and articles of this **Development and Exchange Agreement** are severable for this purpose.

27.13 Parties Bound. Execution of this **Development and Exchange Agreement** by each party binds the entity represented as well as its employees, agents, successors and assigns to its faithful performance.

27.14 Sovereign Immunity. The State does not waive sovereign immunity from suit or liability except to the extent that the Texas Tort Claims Act (Civil Practice and Remedies Code Chapter 101) or except as otherwise provided by other applicable constitutional, statutory or case law.

SAMPLE DRAFT

27.15 Purchasing Preferences. The Developer shall use products and materials produced in Texas for this Project when they are available at a price and time comparable to products and materials used outside this state, pursuant to Government Code Section 2155.4441.

27.16 Detailed Records. All documents and records relating to the Project shall be maintained by the Developer for a period of four (4) years after the date of submission of the final invoice or until the resolution of all billing issues, whichever is later. The Developer shall promptly make available at reasonable times upon reasonable notice and for reasonable periods all information related to the Project for purposes of auditing, inspecting, monitoring, or evaluating by TxDOT, the State of Texas or its authorized representatives. The Developer shall ensure that these requirements are included in any subcontracts it awards.

27.17 Title VI. Title VI of the Civil Rights Act of 1964 applies to this **Development and Exchange Agreement.** Developer shall execute the required assurance and require all subcontractor to execute the required assurance, attached hereto as **Exhibit (letter)**

Article XXVIII – Indemnification

28.1 **PROVISIONS. INDEMNIFICATION OF TXDOT. DEVELOPER COVENANTS AND AGREES TO FULLY INDEMNIFY AND HOLD HARMLESS, TXDOT, ITS EMPLOYEES, OFFICERS, DIRECTORS, VOLUNTEERS, AND REPRESENTATIVES, INDIVIDUALLY OR COLLECTIVELY, FROM AND AGAINST ANY AND ALL COSTS, CLAIMS, LIENS, DAMAGES, LOSSES, EXPENSES, FEES, FINES, PENALTIES, PROCEEDINGS, ACTIONS, DEMANDS, CAUSES OF ACTION, LIABILITY AND SUITS OF ANY KIND AND NATURE, INCLUDING BUT NOT LIMITED TO, ENVIRONMENTAL DAMAGE, PERSONAL OR BODILY INJURY, DEATH AND PROPERTY DAMAGE, MADE UPON TXDOT DIRECTLY OR INDIRECTLY ARISING OUT OF, RESULTING FROM OR RELATED TO DEVELOPER'S ACTIVITIES UNDER THIS DEVELOPMENT AND EXCHANGE AGREEMENT, INCLUDING (i) ANY ERRORS, OMISSIONS OR NEGLIGENT ACTS OF DEVELOPER, ANY OF ITS SUBCONTRACTORS, AGENTS, OFFICERS, DIRECTORS, REPRESENTATIVES, EMPLOYEES, CONSULTANTS AND THEIR RESPECTIVE OFFICERS, AGENTS, EMPLOYEES, DIRECTORS AND REPRESENTATIVES WHILE IN THE EXERCISE OF PERFORMANCE OF THE RIGHTS OR DUTIES UNDER THIS DEVELOPMENT AND EXCHANGE AGREEMENT; (ii) ANY CLAIM ARISING FROM VIOLATION OF ANY LAW, ORDINANCE OR REGULATION BY DEVELOPER, ITS SUBCONTRACTORS OR EMPLOYEES; (iii) ANY SUITS OR CLAIMS FOR INFRINGEMENT OF ANY PATENT OR COPYRIGHT, ARISING WITH RESPECT TO THE DEVELOPER'S PROCESS IN THE FORMULATION OF ITS BID OR PERFORMANCE OF THE WORK OR OTHERWISE ARISING IN**

SAMPLE DRAFT

CONNECTION THEREWITH; (iv) DEVELOPER, DEVELOPER'S EMPLOYEES, AGENTS, REPRESENTATIVES, SUBCONTRACTORS, INVITEES OR ANY OTHER PERSON OCCUPYING THE PROPERTY OR ANY PORTION THEREOF BY, THROUGH, OR UNDER DEVELOPER (BUT EXCLUDING TXDOT AND ITS EMPLOYEES, AGENTS, REPRESENTATIVES, CONTRACTORS, SUBCONTRACTORS, INVITEES OR ANY OTHER PERSON OCCUPYING THE PROPERTY OR ANY PORTION THEREOF BY, THROUGH OR UNDER TXDOT) BRINGING OR DISPOSING ANY HAZARDOUS MATERIALS ONTO OR WITHIN THE PROPERTY, WITHOUT LIMIT AND WITHOUT REGARD TO THE CAUSE OR CAUSES THEREOF OR THE NEGLIGENCE OF ANY PARTY OR PARTIES OTHER THAN TXDOT AND ITS EMPLOYEES, AGENTS, REPRESENTATIVES, CONTRACTORS, SUBCONTRACTORS, INVITEES OR ANY OTHER PERSONS OCCUPYING THE PROPERTY OR ANY PORTION THEREOF BY, THROUGH OR UNDER TXDOT, ON ACCOUNT OF CLEAN-UP, ABATEMENT, AND/OR DISPOSAL COSTS, FINES, AND/OR PENALTIES INCURRED OR CHARGED DUE TO THE PRESENCE OF SUCH HAZARDOUS MATERIALS, PROPERTY DAMAGE AND/OR PERSONAL INJURY SUSTAINED OR ALLEGED TO HAVE BEEN SUSTAINED BY ANY PERSON OR PERSONS AND THE COSTS OF REMOVING ANY LIEN PLACED ON THE PROPERTY AS A RESULT THEREOF; (v) THE FAILURE OF ANY SURETY TO HONOR ANY STATUTORY PAYMENT OR PERFORMANCE BOND PROVIDED UNDER THIS DEVELOPMENT AND EXCHANGE AGREEMENT; (vi) ANY MECHANICS OR CONSTRUCTION LIENS ARISING AS A RESULT OF THE WORK. IN ADDITION, THE INDEMNITY PROVIDED FOR IN THIS PARAGRAPH SHALL NOT APPLY TO ANY LIABILITY RESULTING FROM THE NEGLIGENCE OF TXDOT, ITS OFFICERS OR EMPLOYEES, WHERE SUCH NEGLIGENCE CAUSES PERSONAL INJURY, DEATH, OR PROPERTY DAMAGE. IN THE EVENT DEVELOPER AND TXDOT ARE FOUND JOINTLY LIABLE BY A COURT OF COMPETENT JURISDICTION, LIABILITY SHALL BE APPORTIONED COMPARATIVELY IN ACCORDANCE WITH THE LAWS OF THE STATE OF TEXAS AND WITHOUT WAIVING ANY DEFENSES OF THE PARTIES UNDER TEXAS LAW.

28.1.1 The provisions of this Indemnification are solely for the benefit of the parties hereto and TxDOT's successor or assignee, if any, and not intended to create or grant any rights, contractual or otherwise, to any other person or entity.

28.1.2 The Developer shall promptly advise TxDOT in writing of any claim or demand against TxDOT or Developer known to the Developer which is related to or arising out of the Developer's activities under this **Development and Exchange Agreement**.

SAMPLE DRAFT

Signatory Warranty. The signatories hereto warrant that each has the authority to enter in to this **Development and Exchange Agreement** on behalf of the party represented.

IN WITNESS WHEREOF, the parties have hereunto affixed their signatures effective as of the date first written above and bind themselves to the faithful performance of this **Development and Exchange Agreement**.

<Developer Name>

By: _____
Signature

_____
Title

_____
Printed Name

Texas Department of Transportation

Executed and approved for the Texas Transportation Commission for the purpose and effect of activating and/or carrying out the orders, and established policies or work programs heretofore approved and authorized by the Texas Transportation Commission.

By: _____
Executive Director
Texas Department of Transportation

_____
Printed Name

APPROVAL RECOMMENDED:

_____
Director of Maintenance Division

_____
Printed Name

_____
Date

SAMPLE DRAFT

STATE OF TEXAS §
§
COUNTY OF _____ §

On this ___ day of _____, 2005, before me, a Notary Public in and for said County, personally appeared _____, the _____ of ("**DEVELOPER NAME"**) known to me to be the person whose name is subscribed to the within **Development and Exchange Agreement**, and acknowledged to me that he executed the same on behalf of ("**DEVELOPER NAME"**)

(SEAL)

_____
NOTARY PUBLIC IN AND FOR THE
STATE OF TEXAS

My Commission Expires:
_____

_____
Notary Name Typed or Printed

STATE OF TEXAS §
§
COUNTY OF TRAVIS §

On this ___ day of _____, 2005, before me, a Notary Public in and for said County, personally appeared _____, the _____ of the Texas Department of Transportation, known to me to be the person whose name is subscribed to the within **Development and Exchange Agreement**, and acknowledged to me that he executed the same on behalf of Texas Department of Transportation.

(SEAL)

_____
NOTARY PUBLIC IN AND FOR THE
STATE OF TEXAS

My Commission Expires:
_____

_____
Notary Name Typed or Printed

SAMPLE DRAFT

EXHIBIT A-1
Legal Description of Property
Belton Area Engineer/Maintenance Site

The Texas Department of Transportation (TxDOT) is the owner of certain property and improvements located at 1502 Old Holland Road, Belton, Bell County, Texas, more particularly described by metes and bounds as follows:

Being 10.00 acres in the M.F. CONNELL SURVEY, Abstract Number 6, situated in Belton, Bell County, Texas, and embracing all of the called 6.00 acre tract described in the deed to the State of Texas recorded in Volume 752, page 624 of the Bell County Deed Records, and all of the called 4.00 acre tract described in the deed to the State of Texas recorded in Volume 2448, page 704 of said Deed Records.

COMMENCING at a found ½ inch iron rod in the east side of way line of FM 436, and the east line of a 0.578 of an acre tract described in the deed to the State of Texas recorded in Volume 554, page 178 of said Deed Records, for the southwest corner of Lot 2, Block 1, of the J.C. WOOLEY ADDITION, an addition to the city of Belton, Bell County, Texas, as it appears upon the map recorded in Cabinet C, Slide 195-C of the Bell County Plat Records.

THENCE north 26°09’09” west 516.65 feet along the existing east ROW line of FM 436, also along the west line of Lots 1 and 2 of Block 1 of the J.C. WOOLEY ADDITION to a found ½ inch iron rod, replaced with a set 5/8 inch iron rod and a TxDOT aluminum cap in concrete, being on the south side of a concrete retaining wall being in the east line of FM 436 and a 0.578 acre tract, for the northwest corner of Lot 1, Block 1 of the J.C. WOOLEY ADDITION, also being the southwest corner of the called 6.00 acre tract for the Point of Beginning.

(1) THENCE north 26°09’09” west of 400-31/100 feet along the existing east ROW line of FM 436, along the west line of said 6.00 acre tract to a found 6 feet chain link fence corner post being in the east line of FM 436, also along the east line of said 0.578 acre tract, also being the southwest corner of Lot 1, Block F of the BELL TEX SUBDIVISION, being a REPLAT OF LOT 1, BLOCK F, AND LOT 1, BLOCK G, a subdivision in Belton, Bell County, Texas, as it appears upon the map recorded in Cabinet A, Slide 325-B of the Bell County Plat Records, also at the northwest corner of said 6.00 acre tract.

(2) THENCE north 63°50’51” east 653.49 feet along the north line of said 6.00 acre tract, also along the south line of Block F of the BELL TEX SUBDIVISION to a found PK nail in concrete at the base of a chain link fence corner post being the northeast corner of the called 6.00 acre tract, also being the northwest corner of Lot 10, Block E of the First RE-PLAT OF BLOCK E, BELL TEX SUBDIVISION as it appears upon the map recorded in Cabinet A, Slide 74-A of the Bell County Plat Records.

(3) THENCE south 26°07’16” east 399.96 feet along the east line of said 6.00 acre tract, also along the west line of Block E of the BELL TEX SUBDIVISION with a plastic cap stamped RCS-Temple, TX RPLS 2025 to a set 5/8 inch iron rod being the southeast corner of the called 6.00 acre tract, in the north line of the called 4.00 acre tract, and being the southwest corner of Lot 6, in said Block E of the BELL TEX SUBDIVISION.

(4) THENCE north 63°13’45” east 146.54 feet along the north line of said 4.00 acre tract, also along the south line of Lot 6, Block E of the BELL TEX SUBDIVISION to a found 5/8 inch iron rod

SAMPLE DRAFT

being the northeast corner of the called 4.00 acre tract, the southeast corner of Lot 6, and the northwest corner of Lot 5, in said Block E of the BELL TEX SUBDIVISION.

(5) THENCE south 47°03’40” east 204.93 feet along the east line of said 4.00 acre tract, also along the west line of Lot 5, Block E of the BELL TEX SUBDIVISION to a found 5/8 inch iron rod with a TxDOT aluminum cap at the southeast corner of the called 4.00 acre tract, being the southwest corner of Lot 5, Block E of the BELL TEX SUBDIVISION, also being an angle point in the north line of Lot 10, Block 1 of JAS K. EVETTS ADDITION-SECTION 1, an addition in Belton, Bell County, Texas, as it appears upon the map recorded in Cabinet A, Slide 85-A of the Bell County Plat Records.

(6) THENCE south 43°15’36” west 587.59 feet along the south line of said 4.00 acre tract, also along the north line of Block 1 of the JAS K. EVETTS ADDITION-SECTION 1, to a found ½ inch iron rod in for the southwest corner of the called 4.00 acre tract, also being the north line of Block 1 of the JAS K. EVETTS ADDITION-SECTION 1, also being the southeast corner of Lot 2, Block 1 of the J.C. WOOLEY ADDITION.

(7) THENCE north 40°05’27” west 408.26 feet along the west line of said 4.00 acre tract, also along the east line of Lots 1 and 2, Block 1, of the J.C. WOOLEY ADDITION to a found ½ inch rod being the northwest corner of the called 4.00 acre tract, in the south line of the called 6.00 acre tract, and being the northeast corner of Lot 1, Block 1 of the J.C. WOOLEY ADDITION.

(8) THENCE south 63°49’00” west 224.53 feet along the south line of the called 6.00 acres tract, and the north line of Lot 1, Block 1 of the J.C. WOOLEY ADDITION, to the POINT OF BEGINNING and containing 10.00 acres.

Basis of bearings were taken from the east line of FM 436 adjacent to the J.C. WOOLEY ADDITION and the State of Texas called 6.00 acre tract as north 26 degrees-09 minutes-09 seconds west.

SAMPLE DRAFT

Exhibit A-2
Killeen Maintenance Site

The Texas Department of Transportation (TxDOT) is the owner of certain property and improvements located at 2102 Martin Luther King Blvd., Killeen, Bell County, Texas, more particularly described by metes and bounds as follows:

BEING 7.899 acres of land, surveyed by Landesign Services, Inc., out of the James C. McKee Survey, abstract no. 992, in Bell County, Texas, and being a part of a called 7.94 acre tract of land described in deed to the State of Texas recorded in Volume 1293, page 33 of the deed records of Bell County, Texas (D.R.B.C.T.); and being more particularly described by metes and bounds as follows:

COMMENCING at a found Type I in the existing east ROW line of FM 2410, being the east line of a called 0.191 acre tract of land described in deed to the State at Texas for ROW recorded in Volume 2378, page 606 of the D.R.B.C.T., and the west line of the remainder of a called 176.07 acre tract of land described in deed to Central Texas Union Junior College District recorded in Volume 1779, page 876 of the D.R.B.C.T.;

THENCE South 21°35'07" West 204.89 feet with the existing east ROW line of FM 2410 to a found Type I monument at the southeast corner of said 0.191 acre ROW tract in the south line of the J. J. Roberts Survey, abstract no. 731, the north line of the James C. McKee Survey, and the north line of said 7.94 acres for the **POINT OF BEGINNING**, from which a calculated point for the northwest corner of said 7.94 acres and the southwest corner of said 0.191 acres bears North 73°00'00" West 10.96 feet;

(1) THENCE South 73°00'00" East 689.84 feet with the south line of the J. J. Roberts Survey, the north line of the James C. McKee Survey, and the north line of said 7.94 acres to a found 5/8" iron rod with a TxDOT aluminum cap at the northeast corner of said 7.94 acres;

(2) THENCE South 17°00'00" West 700.00 feet with the east line of said 7.94 acres to a found 5/8 inch iron rod with a TxDOT aluminum cap at the southeast corner of said 7.94 acres;

(3) THENCE North 73°00'00" West 400.00 feet with the south line of said 7.94 acres to a found 5/8 inch iron rod with a TxDOT aluminum cap at the southernmost southwest corner of said 7.94 acres;

(4) THENCE North 17°00'00" East 482.62 feet with the west line of said 7.94 acres to a found 5/8 inch iron rod with a TxDOT aluminum cap at an angle point in the west line of said 7.94 acres;

(5) THENCE North 72°54'10" West 300.59 feet with the west line of said 7.94 acres to a found Type I monument in the existing east ROW line of FM 2410 being the northeast corner of a called 1.887 acre tract of land described in deed to the State of Texas for ROW recorded in Volume 2378, page 606 of the D.R.B.C.T., from which a calculated point for the westernmost southwest corner of said 7.94 acres bears North 72°54'10" West 18.74 feet;

(6) THENCE North 19°50'23" East 217.13 feet through said 7.94 acres to the POINT OF BEGINNING.

This parcel contains 7.899 acres of land, more or less, out of the James C. McKee Survey, abstract no. 992, in Bell County, Texas.

SAMPLE DRAFT

Exhibit A-3
Temple Maintenance Site

The Texas Department of Transportation (TxDOT) is the owner of certain property and improvements located at 3801 North 3rd., Temple, Bell County, Texas, more particularly described by metes and bounds as follows:

BEING 5.997 acres of land, surveyed by Landesign Services, Inc., out of the Uri Holbrook Survey, abstract no. 1009, Bell County, Texas, and being a part of Tract 6 of the subdivision of Matt Bosl 84 acre tract, recorded in Volume 621, page 511 of the Deed Records of Bell County, Texas and all of a called 6.000 acre tract described in deed to the State of Texas recorded in Volume 771, page 368 of the deed records of Bell County, Texas; and being more particularly described by metes and bounds as follows:

COMMENCING at a found ½ inch iron rod in the east ROW line of I 35, the east line of a called 4.288 acre tract of land described in deed to the State of Texas for ROW recorded in Volume 421, page 271 of the Deed Records of Bell County, Texas and in the west line of Tract 7 of the Subdivision of Matt Bosl 84 acre tract and for the southern most westerly corner of a called 8.042 acre tract of land described in deed to ONCOR ELECTRIC DELIVERY COMPANY, recorded in Volume 4882, page 226 of the Deed Records of Bell County, Texas;

THENCE North 15°59'20" East 156.05 feet (record: North 17°59'35" East 156.04 feet), with the east line of east ROW line of I 35, the east line of said 4.288 acres and the west line of said 8.042 acres, passing a Type II ROW monument at 155.15 feet, to a calculated point for the northeast corner of Tract 7 and said 8.039 acres, the southwest corner of Tract 6 and said 6.000 acres and the POINT OF BEGINNING, from which a found ½ inch iron rod bears North 72°53'48" West 0.30 feet;

(1) THENCE North 15°59'20" East 250.00 feet (record North 17°57' East 250.00 feet) with the east ROW line of I 35, the east line of said 4.288 acres and the west line of Tract 6 and said 6.000 acres to a found 5/8 inch iron rod with a TxDOT aluminum cap for the northwest corner of said 6.000 acres and the western most southerly corner of a called 4.89 acre tract of land described in deed to County Developers, Inc., recorded in Volume 1006, page 680 of the Deed Records of Bell County, Texas, from which a found Type II ROW monument bears North 15°59'20" East 1.38 feet;

(2) THENCE South 72°53'48" East 1045.17 feet (record: South 70°59'30" East 1045.62 feet) through Tract 6 along the north line of said 6.000 acres and the south line of said 4.89 acres to a found 5/8 inch iron rod with a TxDOT aluminum cap for the northeast corner of said 6.000 acres and an angle corner in the south line of said 4.89 acres, from which a 3 inch galvanized fence corner post bears, South 72°43' West 1.0 feet;

(3) THENCE South 16°02'42" West 250.00 feet (record: South 17°57' West 250.00 feet) continuing through Tract 6 along the east line of said 6.000 acres and the south line of said 4.89 acres to a found 5/8 inch iron rod with a TxDOT aluminum cap in the north line of said 8.042 acres for the southeast corner of said 6.000 acres and an angle corner in the south line of said 4.89 acres from which a found 1/2 inch iron rod for the southeast corner of Tract 6 and said 4.89 acres and the northeast corner of Tract 7 and said 8.039 acres bears South 72°53'48" East 54.50 feet;

(4) THENCE North 72°53'48" West 1044.92 feet (record North 70°59'30" West 1045.62 feet) along the south line of Tract 6 and said 6.000 acres and the north line of Tract 7 and said 8.042 acres to the POINT OF BEGINNING.

SAMPLE DRAFT

This page left blank intentionally
Information to be based on proposed land

SAMPLE DRAFT

EXHIBIT A-4
Development Restrictions/Encumbrances

This page left blank intentionally
Information to be based on proposed land

SAMPLE DRAFT

EXHIBIT B
Accepted Plans and Specifications

This page left blank intentionally

SAMPLE DRAFT

EXHIBIT C
Absolute Guaranty

This page left out intentionally

SAMPLE DRAFT

EXHIBIT D
Schedule of Values

This page left out intentionally

SAMPLE DRAFT

EXHIBIT E
Prevailing Wage Schedule

This page left out intentionally

SAMPLE DRAFT

EXHIBIT F
Information provided to Developer (Section 4.7)

This page left out intentionally

SAMPLE DRAFT

EXHIBIT G
Project Schedule

This page left out intentionally

SAMPLE DRAFT

EXHIBIT H
HUB Subcontracting Plan Report

This page left out intentionally

SAMPLE DRAFT

EXHIBIT I

Appendix B

Standard DOT Title VI Assurances

Standard DOT Title VI Assurances

DOT 1050.2

Dated 8/24/71

The (Title of Recipient) (hereinafter referred to as the "Recipient") HEREBY AGREES THAT as a condition to receiving any Federal financial assistance from the Department of Transportation it will comply with Title VI of the Civil Rights Act of 1964, 78 Stat. 252, 42 U.S.C. 2000d-42 D.S.C. 2000d-4 (hereinafter referred to as the Act), and all requirements imposed by or pursuant to Title 49, Code of Federal Regulations, Department of Transportation, Subtitle A, Office of the Secretary, Part 21, Nondiscrimination in Federally-Assisted Programs of the Department of Transportation—Effectuation of Title VI of the Civil Rights Act of 1964 (hereinafter referred to as the Regulations) and other pertinent directives, to the end that in accordance with the Act, Regulations, and other pertinent directives, no person in the United States shall, on the grounds of race, color, or national origin, be excluded from participation in, be denied the benefits of, or be otherwise subjected to discrimination under any program or activity for which the Recipient receives Federal financial assistance from the Department of Transportation, including the *(Name of Appropriate Administration),* and HEREBY GIVES ASSURANCE THAT it will promptly take any measures necessary to effectuate this agreement. This assurance is required by subsection 21.7(a)(1) of the Regulations, a copy of which is attached.

More specifically and without limiting the above general assurance, the Recipient hereby gives the following specific assurances with respect to its *(Name of Appropriate Program)*:

1. That the Recipient agrees that each "program" and each "facility" as defined in subsections 21.23(e) and 21.23(b) of the Regulations, will be (with regard to a "program") conducted, or will be (with regard to a "facility") operated in compliance with all requirements imposed by, or pursuant to, the Regulations.

2. That the Recipient shall insert the following notification in all solicitations for bids for work or material subject to the Regulations and made in connection with all *(Name of Appropriate Program)* and, in adapted form in all proposals for negotiated agreements:

The (Recipient), in accordance with Title VI of the Civil Rights Act of 1964, 78 Stat. 252, 42 U.S.C 2000d to 2000d-4 and Title 49, Code of Federal Regulations, Department of Transportation, Subtitle A, Office the Secretary, Part 21, Nondiscrimination in Federally-assisted programs of the Department of Transportation issued pursuant to such Act, hereby notifies all bidders that it will affirmatively insure that in any contact entered into pursuant to this advertisement, minority business enterprises will be afforded full opportunity to submit bids in response to this invitation and will not be discriminated against on the grounds of race, color, or national origin in consideration for an award.

3. That the Recipient shall insert the-clauses of Appendix A of this assurance in every contract subject to the Act and the Regulations.

4. That the Recipient shall insert the clauses of Appendix B of this assurance, as a covenant running with the land, in any deed from the United States effecting a transfer of real property, structures, or improvements thereon, or interest therein.

5. That where the Recipient receives Federal financial assistance to construct a facility, or part of a facility, the assurance shall extend to the entire facility and facilities operated in connection therewith.

6. That where the Recipient receives Federal financial assistance in the form, or for the acquisition of real property or an interest in real property, the assurance shall extend to rights to space on, over or under such property.

7. That the Recipient shall include the appropriate clauses set forth in Appendix C of this assurance, as a covenant running with the land, in any future deeds, leases, permits, licenses, and similar agreements entered into by the Recipient with other parties: (a) for the subsequent transfer of real property acquired or improved under *(Name of Appropriate Program);* and (b) for the construction or use of or access to space on, over or under real property acquired, or improved under *(Name of Appropriate Program).*

SAMPLE DRAFT

8. That this assurance obligates the Recipient for the period during which Federal financial assistance is extended to the program, except where the Federal financial assistance is to provide, or is in the form of, personal property, or real property or interest therein or structures or improvements thereon, in which case the assurance obligates the Recipient or any transferee for the longer of the following periods: (a) the period during which the property is used for a purpose for which the Federal financial assistance is extended, or for another purpose involving the provision of similar services or benefits; or (b) the period during which the Recipient retains ownership or possession of the property.

9. The Recipient shall provide for such methods of administration for the program as are found by the Secretary of Transportation or the official to whom he delegates specific authority to give reasonable guarantee that it, other recipients, subgrantees, contractors, subcontractors, transferees, successors in interest, and other participants of Federal financial assistance under such program will comply with all requirements imposed or pursuant to the Act, the Regulations and this assurance.

10. The Recipient agrees that the United States has a right to seek judicial enforcement with regard to any matter arising under the Act, the Regulations, and this assurance.

THIS ASSURANCE is given in consideration of and for the purpose of obtaining any and all Federal grants, loans, contracts, property, discounts or other Federal financial assistance extended after the date hereof to the Recipient Department of Transportation under the *(Name of Appropriate Program)* and is binding on it, other recipients, subgrantees, contractors, subcontractors, transferees, successors in interest and other participants in the *(Name of Appropriate Program).* The person or persons whose signatures appear below are authorized to sign this assurance on behalf of the Recipient.

Dated _____

_____
(Recipient)

by _____
(Signature of Authorized Official)

APPENDIX A

During the performance of this contract, the contractor, for itself, its assignees and successors in interest (hereinafter referred to as the "contractor") agrees as follows:

(1) **Compliance with Regulations**: The contractor shall comply with the Regulations relative to nondiscrimination in Federally-assisted programs of the Department of Transportation (hereinafter, "DOT") Title 49, Code of Federal Regulations, Part 21, as they may be amended from time to time, (hereinafter referred to as the Regulations), which are herein incorporated by reference and made a part of this contract.

(2) **Nondiscrimination**: The Contractor, with regard to the work performed by it during the contract, shall not discriminate on the grounds of race, color, or national origin in the selection and retention of subcontractors, including procurements of materials and leases of equipment. The contractor shall not participate either directly or indirectly in the discrimination prohibited by section 215 of the Regulations, including employment practices when the contract covers a program set forth in Appendix B of the Regulations.

(3) **Solicitations for Subcontractors, Including Procurements of Materials and Equipment**: In all solicitations either by competitive bidding or negotiation made by the contractor for work to be performed under a subcontract, including procurements of materials or leases of equipment, each potential subcontractor or supplier shall be notified by the contractor of the contractor's obligations under this contract and the Regulations relative to nondiscrimination on the grounds of race, color, or national origin.

(4) **Information and Reports**: The contractor shall provide all information and reports required by the Regulations or directives issued pursuant thereto, and shall permit access to its books, records, accounts, other sources of information, and its facilities as may be determined by the *(Recipient)* or the *(Name of Appropriate Administration)* to be pertinent to ascertain compliance with such Regulations, orders and instructions. Where any information required of a contractor is in the exclusive possession of another who fails or refuses to furnish this information the contractor shall so certify to the *(Recipient),* or the *(Name of Appropriate Administration)* as appropriate, and shall set forth what efforts it has made to obtain the information.

(5) **Sanctions for Noncompliance**: In the event of the contractor's noncompliance with the nondiscrimination provisions of this contract, the *(Recipient)* shall impose such contract sanctions as it or the *(Name of Appropriate Administration)* may determine to be appropriate, including, but not limited to:

(a) withholding of payments to the contractor under the contract until the contractor complies, and/or

(b) cancellation, termination or suspension of the contract, in whole or in part.

(6) **Incorportation of Provisions**: The contractor shall include the provisions of paragraphs (1) through (6) in every subcontract, including procurements of materials and leases of equipment, unless exempt by the Regulations, or directives issued pursuant thereto.

SAMPLE DRAFT

The contractor shall take such action with respect to any subcontract or procurement as the *(Recipient)* or the *(Name of Appropriate Administration)* may direct as a means of enforcing such provisions including sanctions for non-compliance. Provided, however, that, in the event a contractor becomes involved in, or is threatened with, litigation with a subcontractor or supplier as a result of such direction, the contractor may request the *(Recipient)* to enter into such litigation to protect the interests of the *(Recipient),* and, in addition, the contractor may request the United States to enter into such litigation to protect the interests of the United States.

APPENDIX B

A. The following clauses shall be included in any and all deeds effecting or recording the transfer of real property, structures or improvements thereon, or interest therein from the United States.

(GRANTING CLAUSE)

NOW, THEREFORE, the Department of Transportation, as authorized by law, and upon the condition that the *(Name of Recipient)* will accept title to the lands and maintain the project constructed thereon, in accordance with *(Name of Appropriate Legislative Authority),* the Regulations for the Administration of *(Name of Appropriate Program)* and the policies and procedures prescribed by *(Name of Appropriate Administration)* of the Department of Transportation and, also in accordance with and in compliance with all requirements imposed by or pursuant to Title 49, Code of Federal Regulations, Department of Transportation, Subtitle A, Office of the Secretary, Part 21, Nondiscrimination in Federally-assisted programs of the Department of Transportation (hereinafter referred to as the Regulations) pertaining to and effectuating the provisions of Title VI of the Civil Rights Act of 1964 (78 Stat. 252; 42 U.S.C. 2000d to 2000d-4), does hereby remise, release, quitclaim and convey unto the *(Name of Recipient)* all the right, title and interest of the Department of Transportation in and to said lands described in Exhibit "A" attached hereto and made a part hereof.

(HABENDUM CLAUSE)

TO HAVE AND TO HOLD said lands and interests therein unto *(Name of Recipient)* and its successors forever, subject, however, to the convenants, conditions, restrictions and reservations herein contained as follows, which will remain in effect for the period during which the real property or structures are used for a purpose for which Federal financial assistance is extended or foranother purpose involving the provision of similar services or benefits and shall be binding on the *(Name of Recipient),* its successors and assigns.

The *(Name of Recipient),* in consideration or the conveyance of said lands and interests in lands, does hereby convenant and agree as a convenant running with the land for itself, its successors and assigns, that (1) no person shall on the grounds of race, color, or national origin, be excluded from participation in, be denied the benefits of, or be otherwise subjected to discrimination with regard to any facility located wholly or in part on over or under such lands hereby conveyed [,] [land]* (2) that the *(Name of Recipient)* shall use the lands and interests in lands and interests in lands so conveyed, in compliance with all requirements imposed by or pursuant to Title 49, Code of Federal Regulations, Department of Transportation, Subtitle A, office of the Secretary, Part 21, Nondiscrimination in Federally-assisted programs of the Department of Transportation—Effectuation of Title VI of the Civil Rights Act of 1964, and as said Regulations may be amended [,] and (3) that in the event of breach of any of the above-mentioned nondiscrimination conditions, the Department shall have a right to re-enter said lands and facilities on said land, and the above described land and facilities shall thereon revert to and vest in and become the absolute property of the Department of Transportation and its assigns as such interest existed prior to this instruction.

APPENDIX C

The following clauses shall be included in all deeds, licenses, leases, permits, or similar instruments entered into by the *(Name of Recipient)* pursuant to the provisions of Assurance 6(a).

The (grantee, licensee, lessee, permitee, etc., as appropriate) for himself, his heirs, personal representatives, successors in interest, and assigns, as a part of the consideration hereof, does hereby covenant and agree [in the case of deeds and leases add "as a covenant running with the land"] that in the event facilities are constructed, maintained, or otherwise operated on the said property described in this (deed, license, lease, permit, etc.) for a purpose for which a department of Transportation program or activity is extended or for another purpose involving the provision of similar services or benefits, the (grantee_ licensee, lessee, permitee, etc.) shall maintain and operate such facilities and services in compliance with all other requirements imposed pursuant to Title 49, Code of federal Regulations, Department of Transportation, Subtitle A, Office of the Secretary, Part 21, Nondiscrimination in Federally-assisted programs of

* Reverter clause and related language to be used only when it is determined that such a clause is necessary in order to effectuate the purposes of Title VI of the Civil Rights Act of 1964.

SAMPLE ARCHIVE

Appendix B

the Department of Transportation—Effectuation of Title VI of the Civil Rights Act of 1964, and as said Regulations may be amended.

[Include in licenses; leases, permits, etc.]*

That in the event of breach of any of the above nondiscrimination covenants, *(Name of Recipient)* shall have the right to terminate the [license, lease, permit, etc.] and to re-enter and repossess said land and the facilities thereon, and hold the same as if said [licenses, lease, permit, etc.] had never been made or issued.

[Include in deed.}*

That in the event of breach of any of the above non-discrimination covenants, *(Name of Recipient)* shall have the right to re-enter said lands and facilities thereon, and the above described lands and facilities shall thereupon revert to and vest in and become the absolute property of *(Name of Recipient)* and its assigns.

The following shall be included in all deeds, licenses, leases, permits, or similar agreements entered into by *(Name of Recipient)* pursuant to the provisions of Assurance 6(b).

The (grantee, licensee, lessee, permitee, etc., as appropriate) for himself, his personal representatives, successors in interest, and assigns, as a part of the consideration hereof, does hereby covenant and agree (in the case of deeds, and leases add "as a covenant running with the land") that (1) no person on the ground of race, color, or national origin shall be excluded from participation in, denied the benefits of, or be otherwise subjected to discrimination in the use of said facilities, (2) that in the construction of any improvements on, over or under such land and the furnishing of services thereon, no person on the ground of race, color, or national origin shall be excluded from participation in, denied the benefits of, or otherwise be subjected to discrimination, (3) that the (grantee, licensee, lessee, permitee, etc.) shall use the premises in compliance with all other requirements imposed by or pursuant to Title 49, Code of Federal Regulations, Department of Transportation, Subtitle A, Office of the Secretary, Part 21, Nondiscrimination in Federally-assisted programs of the Department of Transportation—Effectuation of Title VI of the Civil Rights Act of 1964), and as said. Regulations may be amended.

[Include in licenses, leases, permits, etc.]*

That in the event of breach of any of the above nondiscrimination covenants, *(Name of Recipient)* shall have the right to terminate the [license, lease, permit, etc.] and to re-enter and repossess said land and the facilities thereon, and hold the same as if said [license, lease, permit, etc.] had never been made or issued.

[Include in deeds]*

That in the event of breach of any of the above non-discrimination covenants, *(Name of Recipient)* shall have the right to re-enter said land and facilities thereon, and the above described lands and facilities shall thereupon revert to and vest in and become the absolute property of *(Name of Recipient)* and its assigns.

---

* Reverter clause and related language to be used only when it is determined that such a clause is necessary in order to effectuate the purposes of Title VI of the Civil Rights Act of 1964.

SAMPLE DRAFT

EXHIBIT J
Election Format for “As Built” Plans

This page left blank intentionally

SAMPLE DRAFT

EXHIBIT K
Final Acceptance Certificate

This page left out intentionally

SAMPLE DRAFT

EXHIBIT L

EXCHANGE AGREEMENTCONCERNING PROPERTY AND IMPROVEMENTS NO LONGER NEEDED BY THE TEXAS TXDOT OF TRANSPORTATION IN RETURN FOR CONSTRUCTION OF A NEW AREA ENGINEER/MAINTENANCE FACILITY AND APPURTENANT PROPERTY IN BELTON, TEXAS

STATE OF TEXAS §
§
COUNTY OF Bell §

THIS AGREEMENT is made by and between the State of Texas, acting by and through the Texas TxDOT of Transportation, hereinafter called "TxDOT", and , hereinafter called the "Developer" pursuant to the Development and Exchange Agreement executed on <>.

WHEREAS, TxDOT, in accordance with the Texas Transportation Code, 201.1055, may exchange land and improvements for construction of new facilities and appurtenant property; and

WHEREAS, pursuant to the Development and Exchange Agreement, the Developer desires to exchange a newly constructed maintenance facility and appurtenant land (the "Property") more particularly described as Exhibit K-1, attached hereto and incorporated herein for all purposes, for TxDOT property and improvements (TxDOT Property) no longer needed for their intended purpose; and

WHEREAS, TxDOT, has determined the Fair Market Value TxDOT Property no longer needed for its intended purpose and located at 1502 Old Holland Road, Belton, 76513; 2102 Martin Luther King Blvd., Killeen, 76541; 3801 North 3rd, Temple, 76501, Bell County, Texas has an appraised value of $1,601,914.00 and is more particularly described on Exhibit K-2, attached hereto and incorporated herein for all purposes; and

WHEREAS, the Developer desires to accept $ as partial payment for the maintenance facility constructed pursuant to the Development and Exchange Agreement executed on <date> and appurtenant land and desires to exchange the Property for any residual amount over and above said $, for the described TxDOT Property; and

WHEREAS, exchange of the TxDOT Property will further TxDOT's ability to meet its responsibilities;

SAMPLE DRAFT

NOW, THEREFORE, in consideration of the agreements of the parties hereto, to be by them respectively kept and performed as hereinafter set forth, it is agreed as follows:

Article 1. Procedure for Exchange of Titles

TxDOT shall execute a Special Warranty Deed, conveying TxDOT Property to Developer at the closing of the exchange transaction. The value of TxDOT Property was determined by an appraisal, dated May 2006, prepared by <name> (a certified appraiser) is $1,601,914.00 and is deemed by Developer and TxDOT to the fair market value of the land and improvements.

- TxDOT's progress payments and final payment for the new facility, pursuant to the Development and Exchange Agreement, constitutes the amount of $<amt.>. The fair market value of TxDOT Property and this amount constitutes the total compensation for Developer's Property.

Article 2. Representations and Warranties

TxDOT has performed its due diligence regarding all aspects concerning TxDOT Property and represents and warrants the following:

- it owns in fee simple the TxDOT Property that will be conveyed to Developer;
- disclosure has been made to Developer of current or former use, generation, storage or disposal of any hazardous material on or under the TxDOT Property currently or previously in violation of any federal, state or local governmental law or rule, if any;
- disclosure has been made to the Developer if the TxDOT Property was ever used for a gas station, auto shop, or dry cleaning service;
- disclosure has been made to the Developer if there was any presence of asbestos material on the Property;
- it has not received any notice of any action or proceeding relating to any hazardous materials or any release thereof on, in, under or about the Property;
- there are no tax liens, material and mechanics liens, judgment liens or claims against the Property;
- there are no taxes owed on the Property;
- tax exempt status will no longer apply to the TxDOT property upon conveyance of title to Developer; and
- it agrees to abide by and perform according to the terms of the Development and Exchange Agreement.

.**Article 3. Incidental Expenses**

At the closing, each party shall bear its own incidental expenses which may include (1) recording fees, transfer taxes and similar expenses incidental to conveying the

SAMPLE DRAFT

respective properties, (2) title policies (3) prorated taxes and (4) recording costs.

This Exchange Agreement and constitutes the only promises, consideration and conditions regarding the conveyance, and no other promises, consideration or conditions have been signified or implied.

Article 4. Availability of Information

This agreement is public information and will be furnished to a requestor under the Public Information Act, Government Code, Chapter 552.

Signatory Warranty. The signatories hereto warrant that each has the authority to enter in to this **Exchange Agreement** on behalf of the party represented.
IN WITNESS WHEREOF, the parties have hereunto affixed their signatures effective as of the date first written above and bind themselves to the faithful performance of this **Exchange Agreement**.

<Developer Name>

By: _____
Signature

_____
Title

_____
Printed Name

Texas Department of Transportation

Executed and approved for the Texas Transportation Commission for the purpose and effect of activating and/or carrying out the orders, and established policies or work programs heretofore approved and authorized by the Texas Transportation Commission.

By: _____
Executive Director
Texas Department of Transportation

_____
Printed Name

APPROVAL RECOMMENDED:

_____

SAMPLE DRAFT

Director of Maintenance Division

_____

Printed Name

_____

Date

SAMPLE DRAFT

EXHIBIT J
EXCHANGE AGREEMENT
CONCERNING PROPERTY AND IMPROVEMENTS NO LONGER NEEDED BY THE TEXAS TXDOT OF TRANSPORTATION IN RETURN FOR CONSTRUCTION OF A NEW MAINTENANCE FACILITY AND APPURTENANT PROPERTY IN RIO GRANDE CITY, TEXAS

STATE OF TEXAS §
§
COUNTY OF BELL §

THIS AGREEMENT is made by and between the State of Texas, acting by and through the Texas TxDOT of Transportation, hereinafter called "TxDOT", and , hereinafter called the "Developer" pursuant to the Development and Exchange Agreement executed on Date.

WHEREAS, TxDOT, in accordance with the Texas Transportation Code, 201.1055, may exchange land and improvements for construction of new facilities and appurtenant property; and

WHEREAS, pursuant to the Development and Exchange Agreement, the Developer desires to exchange a newly constructed maintenance facility and appurtenant land (the "Property") more particularly described as Exhibit K-1, attached hereto and incorporated herein for all purposes, for TxDOT property and improvements (TxDOT Property) no longer needed for their intended purpose; and

WHEREAS, TxDOT, has determined the Fair Market Value TxDOT Property no longer needed for its intended purpose and located at 1502 Old Holland Road, Belton, 76513; 2102 Martin Luther King Blvd., Killeen, 76541; 3801 North 3rd, Temple, 76501, Bell County, Texas; has an appraised value of $1,601,914.00 and is more particularly described on Exhibit A1, A2 & A3, attached hereto and incorporated herein for all purposes; and

WHEREAS, the Developer desires to accept $ as partial payment for the maintenance facility constructed pursuant to the Development and Exchange Agreement executed on <date> and appurtenant land and desires to exchange the Property for any residual amount over and above said $, for the described TxDOT Property; and

WHEREAS, exchange of the TxDOT Property will further TxDOT's ability to meet its responsibilities;

NOW, THEREFORE, in consideration of the agreements of the parties hereto, to be by them respectively kept and performed as hereinafter set forth, it is agreed as follows:

Article 1. Procedure for Exchange of Titles

SAMPLE

The Developer shall execute a Warranty Deed, conveying the Property to TxDOT at the closing of the exchange transaction. Closing shall occur as soon as practical after TxDOT's acceptance of the Project in accord with the Development and Exchange Agreement and approval of the Commission.

The value of the land appurtenant to the improvements was determined by appraisals, dated May 2006, prepared by (a certified appraiser) is $1,601,914.00 and is deemed by Developer and TxDOT to be the fair market value of the land. Developer has agreed to accept in exchange TxDOT Property and $ as the total compensation for the Property.

TxDOT shall execute a Special Warranty Deed, conveying TxDOT Property to Developer at the closing of the exchange transaction. The value of TxDOT Property was determined by an appraisal, dated May 2006, prepared by <name> (a certified appraiser) is $1,601,914.00 and is deemed by Developer and TxDOT to the fair market value of the land and improvements.

- TxDOT's progress payments and final payment for the new facility, pursuant to the Development and Exchange Agreement, constitutes the amount of $<AMOUNT>. The fair market value of TxDOT Property and this amount constitutes the total compensation for Developer's Property.

Article 2. Representations and Warranties

TxDOT has performed its due diligence regarding all aspects concerning TxDOT Property and represents and warrants the following:

- it owns in fee simple the TxDOT Property that will be conveyed to Developer;
- disclosure has been made to Developer of current or former use, generation, storage or disposal of any hazardous material on or under the TxDOT Property currently or previously in violation of any federal, state or local governmental law or rule, if any;
- disclosure has been made to the Developer if the TxDOT Property was ever used for a gas station, auto shop, or dry cleaning service;
- disclosure has been made to the Developer if there was any presence of asbestos material on the Property;
- it has not received any notice of any action or proceeding relating to any hazardous materials or any release thereof on, in, under or about the Property;
- there are no tax liens, material and mechanics liens, judgment liens or claims against the Property;
- there are no taxes owed on the Property;
- tax exempt status will no longer apply to the TxDOT property upon conveyance of title to Developer; and
- it agrees to abide by and perform according to the terms of the Development and Exchange Agreement.

.**Article 3. Incidental Expenses**

At the closing, each party shall bear its own incidental expenses which may include (1) recording fees, transfer taxes and similar expenses incidental to conveying the

SAMPLE

respective properties, (2) title policies (3) prorated taxes and (4) recording costs.

This Exchange Agreement and constitutes the only promises, consideration and conditions regarding the conveyance, and no other promises, consideration or conditions have been signified or implied.

Article 4. Availability of Information

This agreement is public information and will be furnished to a requestor under the Public Information Act, Government Code, Chapter 552.

Signatory Warranty. The signatories hereto warrant that each has the authority to enter in to this **Exchange Agreement** on behalf of the party represented.

IN WITNESS WHEREOF, the parties have hereunto affixed their signatures effective as of the date first written above and bind themselves to the faithful performance of this **Exchange Agreement**.

<Developer Name>

By: _____
Signature

_____
Title

_____
Printed Name

Texas Department of Transportation

Executed and approved for the Texas Transportation Commission for the purpose and effect of activating and/or carrying out the orders, and established policies or work programs heretofore approved and authorized by the Texas Transportation Commission.

By: _____
Executive Director
Texas Department of Transportation

_____
Printed Name

APPROVAL RECOMMENDED:

_____
Director of Maintenance Division

_____
Printed Name

_____
Date

SAMPLE

SAMPLE

ATTACHMENT I

UNIFORM GENERAL CONDITIONS

TABLE OF CONTENTS

ARTICLE I. CONTRACT DEFINITIONS

1.1 Contract Documents
1.2 Owner
1.3 Architect/Engineer
1.4 Contractor
1.5 Subcontractor
1.6 Project
1.7 Work
1.8 Day
1.9 The Contract Sum
1.10 Contract Date

ARTICLE II. LAWS GOVERNING CONSTRUCTION

2.1 Compliance with Laws
2.2 Wage Rates
2.3 State Sales and Use Taxes
2.4 Antitrust Claims
2.5 Venue of Suits

ARTICLE III. CONTRACT DOCUMENTS AND BONDS

3.1 Copies Furnished - Drawings and Specifications
3.2 Ownership of Drawings and Specifications
3.3 Drawings and Specifications at the Site
3.4 Performance and Payment Bonds
3.5 Interrelation of Documents

ARTICLE IV. CONTRACT ADMINISTRATION

4.1 General Administration
4.2 Access to and Inspection of the Work
4.3 Separate Contracts
4.4 Contract Termination
4.5 Written Notice
4.6 Disputed Matters

ARTICLE V. CONTRACT RESPONSIBILITIES

5.1 Owner's Responsibilities
5.2 Owner-Contractor Obligations
5.3 Contractor's Responsibilities
5.4 Contractor's Superintendent
5.5 Acts and Omissions
5.6 Conditions at Site or Building
5.7 Insurance
5.8 Safety Precautions and Programs
5.9 Materials and Workmanship
5.10 Tests
5.11 Removal of Defective Work
5.12 Royalties and Patents
5.13 Equal Materials
5.14 Shop Drawings and Samples
5.15 Cleaning

ARTICLE VI. CONTRACT CHANGES

6.1 Change Orders
6.2 Unit Prices
6.3 Claims for Additional Costs
6.4 Claims for Additional Time
6.5 Minor Changes
6.6 Administration

ARTICLE VII. CONTRACT PAYMENTS

7.1 Contract Price Breakdown
7.2 Progress Payments
7.2.8 Good Faith Effort Program – HUBs (GFEP)
7.3 Claims for Unpaid Labor, Materials and/or Services

ARTICLE VIII. CONTRACT COMPLETION TIME

8.1 Notice to Proceed
8.2 Work Progress Schedule
8.3 Delays and Extension of Time
8.4 Failure to Complete Work on Time

ARTICLE IX. CONTRACT SUBSTANTIAL COMPLETION

9.1 Date of Substantial Completion
9.2 Certification
9.3 Additional Inspection Costs
9.4 Occupancy or Use

ARTICLE X. CONTRACT FINAL ACCEPTANCE AND PAYMENT

10.1 Notification
10.2 Final Payment Documentation
10.3 Final Payment

ARTICLE XI. CONTRACT WARRANTY AND GUARANTEE

11.1 One Year Warranty
11.2 Correction of Defects

ARTICLE XII. SUPPLEMENTAL AND SPECIAL CONDITIONS

12.1 General
12.2 Federally Funded Projects

END OF TABLE OF CONTENTS

UNIFORM GENERAL CONDITIONS

FOR
STATE OF TEXAS
BUILDING CONSTRUCTION CONTRACTS

General Services Commission
May 9, 1996 for acts of
the 74th Texas Legislature
MNT- 2003

ARTICLE I. CONTRACT DEFINITIONS

Whenever the following terms are used in these General Conditions or in the other Contract Documents the intent and meaning shall be interpreted as follows:

1.1 CONTRACT DOCUMENTS:

The Owner-Contractor agreement shall consist of the Contract Documents, Contractor's Proposal and Contract Award. The Contract Documents include Bidding Documents, Advertisement and Invitation and Instructions to Bidders.

The Contract Documents consist of the Owner-Contractor Agreement, the Conditions of the Contract (General, Supplementary General and Special Conditions), the Drawings, the Specifications, and all Addenda issued prior to and any change orders issued after execution of the Contract.

1.1.1 The Contract Documents form the CONTRACT, which represents the entire and integrated agreement between the Owner and the Contractor and supersedes all prior negotiations, representations or agreements, either written or oral. The Contract Documents are complementary, and what is required by any one document shall be as binding as if required by all.

1.1.2 Supplementary General Conditions are the standard procedures and contract administration requirements of an individual State contracting agency and alter or expand upon matters covered in the Uniform General Conditions.

1.1.3 Special Conditions relate to a specific project and are peculiar to it.

1.1.4 Close-out documents are the standard product brochures, product/equipment maintenance and operations instructions, manuals, etc., and as may be further defined or identified and required by the contract documents.

1.2 OWNER: The Owner is the State of Texas acting through any responsible instrumentality of the State of Texas.

1.3. ARCHITECT/ENGINEER: A person registered as an architect pursuant to Article 249a, Texas Civil Statutes (T.C.S.), as a landscape architect pursuant to Article 249c, T.C.S., and/or a person licensed as a professional engineer pursuant to Article 327la, T.C.S., or firm employed to provide professional architectural or engineering services and having overall responsibility for the design of a project or a significant portion thereof.

1.4. CONTRACTOR: The individual, corporation, company, partnership, firm or other organization that has contracted to perform the Work under the Contract with the Owner.

1.5 SUBCONTRACTOR: A person or organization who contracts under, or for the performance of part or all of, the Contract between the Owner and the Contractor. The subcontract may be direct with the Contractor or with another subcontractor.

1.6 PROJECT: The term Project shall comprise the work defined by the contract documents.

1.7 WORK: All labor, plant, materials, facilities, and all other things which are required by the Contract documents.

1.8 DAY: Wherever the word day is used in the contract documents, it shall be interpreted to mean a calendar day, unless otherwise specifically stipulated.

1.9 THE CONTRACT SUM is the total compensation payable to the Contractor for performing the Work as originally contracted for or as subsequently adjusted by change order.

1.10 CONTRACT DATE is the date of the contract award notice issued by the owner.

ARTICLE II. LAWS GOVERNING CONSTRUCTION

2.1 Compliance with Laws: In the execution of the Contract, the Contractor must comply with all applicable State and Federal laws, including but not limited to laws concerned with labor, equal employment opportunity, safety and minimum wages. The Contractor shall make himself familiar with and at all times shall observe and comply with all Federal, State and Local laws, ordinances and regulations which in any manner affect the conduct of the Work, and shall indemnify and save harmless the State and its official representatives against any claim arising from violation of any such law, ordinance or regulation by himself or by his subcontractor or his employees.

2.1.1 The Contract shall cooperate with applicable city or other governmental officials at all times where there jurisdiction prevails. The Contractor shall make application for any permits and permanent utilities which are required for the execution of the Contract.

2.2 Wage Rates: The Contractor is required to pay not less than the wage scale of the various classes of labor as show on the Prevailing Wage Schedule provided by the Owner. The specified wage rates are minimum rates only, and the Owner will not consider any claims for additional compensation made by any Contractor because of payment by the Contractor of any wage rates in excess of the applicable minimum rate contained in the Contract.

2.2.1 Pursuant to the provisions of Section 2 of Article 5159a, Texas Civil Statutes, the contractor shall forfeit as a penalty to the State, ten dollars ($10.00) for each laborer, workman or mechanic employed, for each calendar day, or portion thereof, such laborer, workman or mechanic is paid less than the said stipulated minimum rates for any work done under said contract, by him, or by any subcontractor under him. The Contractor and each Subcontractor shall keep, or cause to be kept, an accurate record showing the names and occupations of all laborers, workmen and mechanics employed in connection with the Work, and showing also the actual per diem wages paid to such workers, which record shall be open at all reasonable hours for the inspection by the Owner.

2.2.2 Certain Public Works required under the Minimum Wage Schedule to list not only Building Construction wage rates but also Incidental Paving and Utilities wage rates. The Contractors attention is called to the fact that all classes of work within the area of the building shall be paid Building Construction wage rates.

2.2.3 The Minimum Wage Schedule shall be made available, upon request, to any employee of the Contractor and to any employee of his subcontractors.

2.3 State Sales and Use Taxes: The owner qualifies for exemption from State and Local Sales and Use Taxes pursuant to the provisions of the Texas Limited Sales, excise and Use Tax Act (Taxation - General, Article 20.04, Texas Civil Statutes). The Contractor may claim exemption from payment of applicable State taxes by complying with such procedures as may be prescribed by the State Comptroller of Public Accounts.

2.4 Antitrust Claims: The Contractor shall assign to the Owner any and all claims for overcharges associated with this Contract which arise under the antitrust laws of the United States, 15 U.S.C.A. Secs. 1 et seq.

2.5 Venue of Suits: The venue of any suit brought for breach of contract for this project shall be in any court of competent jurisdiction in Travis County, Texas.

ARTICLE III. CONTRACT DOCUMENTS AND BONDS

3.1 Copies Furnished - Drawings and Specifications: The Contractor will be furnished free of charge the number of complete sets of the Contract Drawings and Specifications are provided in the Supplementary General Conditions or Special Conditions. Additional complete sets of Drawings and Specifications, if requested, will be furnished at reproduction cost to the one requesting such additional sets.

3.2 Ownership of Drawings and Specifications: All Drawings, Specifications and copies thereof furnished by the Architect/Engineer are, and shall remain, his property. They are not to be used on any other project and, with the exception of one contract set for each party to the Contract, are to be returned to the Architect/Engineer upon request following completion of the work.

3.3 Drawings and Specifications at the Site: The Contractor shall maintain at the site one copy of all Drawings, Specifications, Addenda, approved Shop Drawings and Contract Modifications, in good order and marked to record all changes made during construction.

3.4 Performance and Payment Bonds: Notice: In accordance with H.B. 31, 73rd Legislature, performance Bonds are not required on contracts of $100,000.00 or less unless otherwise stipulated in Supplementary General Conditions. Payment Bonds are not required on contracts of $25,000.00 or less unless otherwise stipulated in Supplementary General Conditions. Payment or Performance Bonds are not required on contracts of $25,000.00 or less unless otherwise stipulated in Supplementary General Conditions. If the total Contract Price exceeds $25,000.00, the Contractor shall execute in accordance with the provisions of Chapter 2253, Government code, as amended by 74th Legislature, in accordance with applicable Texas Civil Statutes, the following bonds to the Owner.

(1) Performance Bond in the amount of the total Contract Price conditioned upon the faithful performance of the Contract. Said bond shall be solely for the protection of the State of Texas.

(2) Payment Bond in the amount of the total Contract Price, solely for the protection of those supplying labor, materials and/or equipment in the prosecution of the Contract.

3.4.1 Each bond shall be executed by a solvent corporate surety or corporate sureties duly authorized to do business in the State of Texas, acceptable to the Owner, and on forms approved by the Attorney General of Texas. If any surety upon any bond furnished in connection with the Contract becomes insolvent, or otherwise not authorized to do business in the State, the Contractor shall promptly furnish equivalent security to protect the interests of the State of Texas and of persons supplying labor, materials and/or equipment in the prosecution of the Work contemplated by the Contract.

3.4.2 Each bond shall be accompanied by a valid Power-of-Attorney (issued by the Surety company and attached, signed and sealed, with the corporate embossed seal, to the bond) authorizing the agent who signs the bond to commit the company to the terms of the bond, and stating (on the face of the Power-of-Attorney) the limit, if any, in the total amount for which he is empowered to issue a single bond.

3.4.3 The furnishing of the Performance and Payment Bonds is one of the initial Contractor performance requirements, and must be accomplished before a Notice to Proceed is issued, and if not provided within 15 calendar days after receipt of the Contract Award, may result in forfeiture of the Contractors bid security.

3.5 Interrelation of documents: The interrelation of the specifications, the drawings and the schedules is as follows: The specifications determine the nature and setting of the several materials; the drawings establish the quantities, dimensions and details; and the schedules give the locations. Anything mentioned in the specifications and not shown on the drawings or schedules, or shown on the drawings or schedules and not mentioned in the specifications, shall be of like effect as if shown or mentioned in both.

3.5.1 Should the drawings disagree one with another, or with the specifications, the better quality or greater quantity of work or materials shall be performed or furnished. Figures given on drawings govern small scale drawings.

3.5.2 The Scope of the Work, placed in the front part of each Section of the Specifications, is intended to designate the scope and locations of all items of the work included therein, either generally or specifically, It is not intended to limit the Scope of Work should plans, schedules or notes indicate an increased scope. Inadvertent omission of an item from its proper section of the specifications and its inclusion in another section shall not relieve the Contractor of responsibilities for the item specified.

ARTICLE IV. CONTRACT ADMINISTRATION

4.1 General Administration: Unless otherwise provided for in the Contract Documents, the Architect/Engineer will provide general administration of the Contract and will be the Owner's representative during construction and until final payment. The Owner assumes no responsibility for any understanding given or representation made orally by its agents prior to the execution of this Contract, unless such understanding(s) or representation(s) are expressly stated in the Contract. The Owner assumes no responsibility for any conclusion or interpretation made by the Contractor. Any failure by the Contractor to become acquainted with available information will not relieve it from responsibility for properly estimating the difficulty or cost of successfully performing the Work or mutually agreed changes thereto.

4.1.1 The Architect/Engineer has the authority to act on behalf of the Owner to the extent provided for in the Contract Documents, unless otherwise modified by written instrument which will be shown to the Contractor. The Architect/Engineer will advise and consult with the Owner, and the Owners instructions to the Contractor will generally be issued through the Architect/Engineer, except that the Owner reserves the right on appropriate occasions to issue instructions directly to the Contractor through other designated representatives.

4.1.2 All instructions affecting contract sum, contract time or contract interpretation, shall be confirmed expeditiously in writing with copies furnished to the Architect/Engineer, the Owners designated representatives, and the Contractor by the party issuing the instruction. No instruction affecting the Architect/Engineers design liability shall be issued without his prior written consent.

4.1.3 The Architect/Engineer shall have the authority to reject work performed by the Contractor which, in the opinion of the Architect/Engineer, does not meet the requirements of the Contract and to order such work removed and replaced in accordance with paragraph 5.11.

4.1.4 Should work be identified by either the architect and/or owners designated representative as not being in compliance with the contract document requirements, such work shall be corrected by the contractor at his expense. The approval of work by either the architect and/or owners designated representative does not relieve the contractor from compliance with all requirements of the contract documents where such requirements are not judged at the time of observation of the work due to work sequences by the contractor or the lack of time to judge the performance characteristics of the particular work item.

4.2 Access to and Inspection of the Work: The Contractor shall provide sufficient, safe and proper facilities at all reasonable times for observation and/or inspection of the Work by the authorized representatives of the Owner. The Architect/Engineer and the Owner will make periodic visits to the site to familiarize themselves with the progress and quality of the Work and to determine if the Work is proceeding in accordance with the Contract Documents.

4.2.1 The Contractor shall not cover up any work with finishing materials or other building components prior to an inspection of the work by the Architect or the Owner for approval of the installation. Should corrections of the work be required for approval, cover up shall be delayed until another inspection can be made and approval is indicated. Verbal approval to proceed with subsequent operations shall be confirmed to the Contractor in writing by the inspecting party.

4.2.2 The Contractor shall be responsible for providing notification of a least five (5) working days to both Architect and Owner of the anticipated need for cover up inspection. Should both Architect and Owner fail to make the necessary inspection within an additional five (5) working day period, the Contractor may proceed with cover up work, unless the Owner makes a written arrangement with the Contractor for additional time in which to complete desired inspections.

4.3 Separate Contracts: The Owner reserves the right to award other contracts in connection with other portions of the Project under these or similar conditions of the Contract.

4.3.1 When separate contracts are awarded for different portions of the Project, the Contractor in the Contract Documents in each case shall be the Contractor who signs each separate Contract. This Contractor shall properly connect and coordinate his work with the work of other contractors. If any part of this Contractors work depends on proper execution or proper results on the work of any other separate contractor, this Contractor shall inspect and promptly report in writing to the Architect/Engineer any discrepancies or defects he may find in such other work that render it unsuitable for such proper execution and results. Failure of this Contractor to so inspect and report shall constitute an acceptance of the other contractors work as fit and proper to receive his work, except as to defects which may develop in the other separate contractors work after the execution of this Contractors work.

4.3.2 Should this Contractor cause damage to the work or property of any separate contractor on the Project, this Contractor shall, upon due notice endeavor to settle with such other contractor by agreement. If such separate contractor sues the Owner on account of any damage alleged to have been so sustained, the Owner shall notify this Contractor who shall defend such proceedings and pay all cost in connection therewith, and if any judgment against the Owner arises therefrom, this Contractor shall pay or satisfy it.

4.3.3 This Contractor shall afford the Owner and/or Architect other reasonable opportunity for the introduction and storage of their materials and equipment and the execution of their work and shall properly connect and coordinate his work with theirs.

4.4 Contract Termination:

4.4.1 Termination by Contractor. If the Work is stopped for a period of ninety (90) days under an order of any court or other public authority having jurisdiction, or as a result of an act of government, such as a declaration of a national emergency making materials unavailable, through no act or fault of the Contractor or a Subcontractor or their agents or employees or any other persons performing any of the Work under a contract with the Contractor, then the Contractor may, upon ten (10) additional days written notice to the Owner and the Architect/Engineer, terminate the Contract and recover from the Owner payment for all Work executed and for any loss sustained upon any materials, equipment, tools, construction equipment and machinery, including reasonable profit and overhead associated with such work or losses and reasonable expenses resulting from such termination. If the cause of the work stoppage is removed prior to the end of the ten (10) day notice period, the Contractor may not terminate the Contract.

4.4.2 Termination by Owner. If the Contractor persistently or repeatedly refuses or fails, except in cases for which extension of time is provided, to supply enough properly skilled workmen or proper materials, or persistently disregards laws, ordinances, rules, regulations or orders of any public authority having jurisdiction, or otherwise is guilty of a substantial violation of a provision of the Contract Documents, or fails to so prosecute the work as to insure its completion, within the time, or any extension thereof, specified in this contract, then the Owner may, without prejudice to any right or remedy and after giving the Contractor and his surety, if any, ten (10) days written notice, terminate the employment of the Contractor and take possession of the site and of all materials, equipment, tools, construction equipment and machinery thereon owned by the Contractor. Should the surety fail to respond within fifteen (15) days following such notice and fail to pursue completion of the work with diligence acceptable to the Owner, the Owner may arrange for completion of the Work and deduct the cost thereof from the unpaid Contract sum remaining, including the cost of additional Architect/Engineer services made necessary by such default or neglect, in which event no further payment shall then be made by the Owner until all costs of completing the Work shall have been paid. If the unpaid balance of the Contract sum exceeds the costs of finishing the Work,

including compensation for the Architect/Engineers additional services made necessary thereby, such excess shall be paid to the Contractor. If such costs exceed the unpaid balance, the Contractor or his surety shall pay the difference to the Owner. This obligation for payment shall survive the termination of the Contract.

4.4.3 Termination for Convenience of Owner: Prior to, or during the performance of the Work, the Owner reserves the right to terminate the Contract for unforeseen causes not limited to court orders, loss of funding, acts of the federal government to discontinue the work, etc., that may occur. Upon such an occurrence, the following procedures will be adhered to:

1. The Owner will immediately notify the Architect/Engineer and the Contractor in writing, specifying the effective termination date of the contract.
2. After receipt of the notice of termination, the Contractor shall immediately proceed with the following obligations, regardless of any delay in determining or adjusting any amounts due at that point in the Contract.

    a. Stop all work.
    b. Place no further subcontracts or orders for materials or services.
    c. Terminate all subcontracts.
    d. Cancel all material and equipment orders as applicable.
    e. Take action that is necessary to protect and preserve all property related to this Contract which is in the possession of the Contractor.

3. Within 180 days of the date of the notice of termination, the Contractor shall submit a final termination settlement proposal to the Owner based upon costs up to the date of termination, reasonable profit on work done only, and reasonable demobilization costs. If the Contractor fails to submit the proposal within the time allowed, the Owner may determine the amount due to the Contractor because of the termination and shall pay the determined amount to the Contractor.
4. If the Contractor and the Owner fail to agree on the settlement amount, the matter will be handled as a dispute through administrative procedures as stated in paragraph 4.6.

4.5 Written Notice: Written notice shall be considered to have been duly given if delivered in person to the individual or member of the firm or to an officer of the corporation for whom it is intended, or if delivered at or sent by registered or certified mail to the last business address known to one how gives the notice.

4.6 Disputed Matters: Disputed matters shall be referred to the Owners established administrative procedures as established in Supplementary General Conditions. Such matters shall be referred to the Owners established administrative review process prior to resort by either party to judicial redress through court laws.

4.6.1 (LEFT BLANK INTENTIONALLY)

4.6.2 (LEFT BLANK INTENTIONALLY)

4.6.3 (LEFT BLANK INTENTIONALLY)

4.6.4 (LEFT BLANK INTENTIONALLY)

4.6.5 (LEFT BLANK INTENTIONALLY)

4.6.6 (Deleted)

ARTICLE V. CONTRACT RESPONSIBILITIES

5.1 Owner's Responsibilities: The Owner shall furnish all surveys describing the physical characteristics, legal description and limitations, site utility locations and other information necessary to the Contractor which is under the Owners control. Communication with the Contractor shall be in accordance with paragraph 4.1.1. Necessary actions of the Owner, including processing of payments to the Contractor, shall be accomplished with reasonable promptness and subject to Article 601f, T.C.S. The Owner shall pay for all routine testing of materials agreed by the Owner and the Architect/Engineer to be required by the Contract Documents, except for retesting of materials failing the initial test which will be paid for by the Contractor.

5.2 Owner-Contractor Obligations: The Owner and the Contractor each binds himself, his partners, successors, assigns and legal representatives to the other party hereto and to the partners, successors, assigns and legal representatives of such other party in respect to all covenants, agreements and obligations contained in the Contract Documents. The Contractor shall not assign the Contract or sublet it as a whole without the written consent of the Owner, nor shall the Contractor assign any moneys due or to become due to him hereunder, without the previous written consent of the Owner.

5.3 Contractor's Responsibilities: The Contractor shall supervise and direct the Work using his best skill and attention. He shall be solely responsible for all construction means, methods, techniques, safety, sequences and procedures, and for coordinating all portions of the Work under his Contract.

5.4 Contractor's Superintendent: The Contractor shall employ a competent superintendent who shall be in attendance at the Project site during the progress of the Work. The superintendent shall be satisfactory to the Owner, and shall not be changed except with the written approval of the Owner unless he leaves the employment of the Contractor. The superintendent shall represent the Contractor and shall have full authority to act on his behalf. All communications given to the superintendent shall be as binding as if given to the Contractor. All oral communications affecting contract time, contract cost and contract interpretation will be confirmed in writing.

5.5 Acts and Omissions: The Contractor shall be responsible for acts and omissions of his employees and his subcontractors, their agents and employees, and shall indemnify and save harmless the State and its official representatives against any claim arising from any said acts or omissions by himself or by his subcontractor or his employees.

5.6 Conditions at Site or Building:

5.6.1 The Contractor is responsible for having visited the site and having ascertained pertinent local conditions such as location, accessibility, and general character of the site or building, the character and extent of existing work within and adjacent to the site, and any other work being performed thereon at the time of the submission of his proposal. Any failure to do so will not relieve him from responsibility for successfully performing the Work without additional expense to the Owner.

5.6.2 If, in the performance of the Contract, subsurface, latent or concealed conditions at the site are found to be materially different from the information included in the bid documents, or if unknown conditions of an unusual nature are disclosed differing materially from the conditions usually inherent in work of the character shown and specified, the Architect/Engineer shall be notified in writing of such conditions before they are disturbed. Upon such notice, or upon his own observation of such conditions, the Architect/Engineer, with the approval of the Owner, will promptly make such changes in the Drawings and Specifications as he deems necessary to conform to the different

conditions, and any increase or decrease in the cost of the Work, or in the time within which the Work is to be completed, resulting from such changes will be adjusted by Change Order, subject to the prior approval of the Owner.

5.7 Insurance:

5.7.1 The Contractor shall not commence work under this Contract until he has obtained all the insurance required hereunder and certificates of such insurance have been filed with and reviewed by the Owner. Acceptance of the insurance certificates by the Owner shall not relieve or decrease the liability of the Contractor.

5.7.2 Unless otherwise provided for in Supplementary Conditions, the Contractor shall provide and maintain, until the Work covered in this Contract is completed and accepted by the Owner, the minimum insurance coverage in one of the following optional schedules. When the Contractor includes the excess liability coverage (Item.8), the limits of other required coverage may be reduced to the amounts shown in bold type:

Type of Coverage	Limits of Liability
1. Worker's Compensation	Statutory
2. Employer's Liability	
Bodily Injury by Accident	500,000 Ea. Accident
Bodily injury by Disease	$500,000 Ea. Employee
Bodily Injury By Disease	$500,000 Policy Limit
3. Comprehensive General Liability	
Liability	$1,000,000 Aggregate
	$1,000,000 Products Completed Operations
Combined Bodily Injury & Property Damage	$1,000,000 Personal & Advertising Liability
	$1,000,000 Each Occurrence
	$50,000 Fire damage
	$5,000 Medical Expense
4. Comprehensive Automobile Liability	$1,000,000 Combined Single Limit

5. Owner's Protective Liability Insurance Policy:
The Contractor shall obtain at his expense an Owner's Liability Insurance Policy naming the State of Texas, its employees, and the Architect/Engineer as insured with the following limits:

a.	Bodily Injury	$1,000,000 Each Occurrence $1,000,000 Aggregate

6. Builder's Risk Insurance:

a. The Contractor shall obtain at his expense on an all risk of physical lost basis, Builder's Risk Insurance coverage including workmanship acceptable to the Owner, in the amount of insurance equal at all times to 100% of the insurable value of materials delivered and labor performed. The policy so issued in the name of the Contractor shall also name his Subcontractors and the Owner as additional insureds, as their respective interests may appear. The policy shall have endorsements as follows:

This insurance shall be specific as to coverage and not considered as contributing insurance with any permanent insurance maintained on the present premises.

b. For Renovation Projects and/or Work: The Owner waives subrogation for damage by fire to existing building structure(s), if building structure(s) is in care, custody or control of Contractor, and

Builder's Risk Policy shall be endorsed to include coverage for existing building structure(s).

7. Flood insurance when specified in Supplementary General Conditions.

8. Umbrella coverage when specified in Supplementary General Conditions:

The Contractor may provide the following minimum Coverage Limits, as recommended by the advice and counsel of the Contractor's insurance provider:

a. When Contract Amount equals less than $5,000,000.
Excess or Umbrella Policy of $1,000,000.

b. When Contract Amount exceeds $5,000,000.
Excess or Umbrella Policy of $5,000,000.

5.7.3 The coverage listed above shall be subject to the following conditions:

1. Owner's Protective Liability and Contractor's Protective Policy shall be by the same carrier.
2. All policies shall contain special endorsements to include:
   a. The Owner as additional insured (except Worker's Compensation and Employer's Liability).
   b. Notice of cancellation to Owner.
   c. Waiver of subrogation.

5.7.4 The furnishing of the above listed insurance coverage, as may be modified by Special Conditions, is one of the Contractor's initial requirements of the Contract which must be performed before a Notice to Proceed can be issued, and if not provided within 15 calendar days after receipt of the Contract Award, may result in forfeiture of the Contractor's bid security.

5.7.5 The furnishing of the above worker's compensation insurance includes the responsibility of the General Contractor to provide coverage of every work either under the general contractor's policy or under the policy provided by a subcontractor. The General Contractor's policy shall provide that, in the event that a subcontractor's policy fails to provide workers compensation coverage of a worker, that such insurance coverage is provided by the general contractor's policy.

5.8 Safety Precautions and Programs:

5.8.1 It shall be the duty and responsibility of the Contractor and all of its subcontractors to be familiar and comply with all requirements of Public Law 91-596.29 U.S.C. Secs. 651 et seq., the Occupational Safety and Health Act of 1970, (OSHA) and all amendments thereto, and to enforce and comply with all the provisions of this Act.

In addition, on projects in which trench excavation will exceed a depth of five feet, the Contractor and all of its subcontractors shall comply with all requirements of 29 C.F.R. Secs. 1926.652 and 1926.653, OSHA Safety and Health Standards, which are more fully described in the Special Conditions, and shall require a pay item classification, pursuant to paragraph 7.1, for the particular safety system to be utilized by the Contractor.

1. Before commencing any trench excavation which will exceed a depth of five feet, Contractor shall provide to Owner a copy of any geotechnical investigation used for preparation of detailed drawings and specifications regarding the safety systems to be utilized. Such drawings and specifications shall include a certification from a registered professional engineer indicating full compliance with the OSHA regulations referenced herein.

2. It is the Contractor's responsibility to comply with any additional requirements resulting from any pre-bid conference relating to coordination of geotechnical investigation subjects.

5.8.2 In any emergency affecting the safety of persons or property, the Contractor shall act, at his discretion, to prevent threatened damage, injury, or loss. Any additional compensation or extension of time claimed by the Contractor resulting from emergency work shall be considered in accordance with Article VI for Contract changes.

5.9 Materials and Workmanship: All Work shall be executed in accordance with the Contract Documents, complete in all parts and in accordance with approved practices and customs, and of the best finish and workmanship. Unless otherwise specified, all materials and equipment incorporated in the Work under the Contract shall be new.

5.9.1 The Contractor shall comply with applicable provisions of Article 8861, TCS; Article 5.43.1, 5.43.2, and 5.43.3 of the Texas Insurance Code relating to the required licensing of heating, ventilating and air conditioning contractors, fire sprinkler system contractors, materials, suppliers, and/or laborers respectively.

5.10 Tests: If the Contract Documents, laws, ordinances, rules, regulations or orders of any public authority having jurisdiction require any work to be inspected, tested or approved, the Contractor shall give the Owner and the Architect/Engineer timely notice of its readiness and of the date arranged so the Architect/Engineer may observe such inspection, testing or approval. In addition, the Owner or the Architect/Engineer may observe such inspection, testing or approval. In addition, the Owner or the Architect/Engineer may require special inspection, testing or approval of material or work for compliance with the requirements of the Contract Documents. Upon direction of the Owner and the Architect/Engineer, the Contractor shall promptly arrange for such special testing, inspection or approval procedure. Should the material or work fail to comply with the requirements of the Contract Documents, the Contractor shall bear all costs of the testing, inspection or approval as well as the cost of replacement of unsatisfactory material or work as provided by paragraph 5.11; otherwise, the Owner shall bear such costs and an appropriate change order shall be issued.

The costs of routine testing shall be borne by the Owner, but the Contractor shall be responsible for the cost of material tested. When directed by the Owner, material compliance with the specifications shall be made by one of the following:

1. Manufacturer's certificate of compliance.
2. Mill certificate.
3. Testing laboratory certification.
4. Report of actual laboratory test from the Owner's laboratory or from a laboratory satisfactory to the Owner. Samples tested shall be selected by or in the presence

of the Owner and the method of testing shall comply with the professional societies standard specifications.

5.10.1 Materials incorporated into this Project will be subject to routine tests as required to insure their compliance with the Specifications. Included, but not necessarily restricted to, are the following:

1. Concrete - Primary mix design, slump tests and cylinder compression tests.
2. Steel - Tensile tests.
3. Welds - Field inspection and X-ray equipment.
4. Soils - Subsoil investigation, physical analysis and compaction tests.
5. Pavement - Physical analysis and compaction tests.
6. Roofing - Samples cut from in-place roof.

Any other basic materials for which standard laboratory test procedures have been established may also be included if doubt as to their quality should arise. Any testing of the above nature will be done at the discretion of the Owner who will bear all costs. The Contractor shall be held responsible for providing samples of sufficient size for test purposes and for cooperating with the Owner or his representative in obtaining and preparing samples for tests. All tests will be in accordance with standard test procedures and will be performed by a laboratory selected by the Owner. Results of all tests will be provided to the Owner, Architect/Engineer and the Contractor.

Not included in tests provided by the Owner are:

7. Any test of basic material or fabricated equipment offered as a substitute for specified item on which a test may be required in order to prove its compliance with the Specifications.
8. Tests on mechanical systems required to insure their proper installation and operation.

5.10.2 Should any of the routine tests indicate that a material does not comply with the job requirements, the burden of proof of compliance shall be with the Contractor subject to the following conditions.

1. Contractor may select the laboratory for further testing, but selection must be approved by the Owner.
2. All tests shall be taken in the presence of the Owner or his representative.
3. Quantity and nature of tests will be determined by the Owner.
4. If tests prove material complies with Specifications, laboratory fees will be paid by the Owner. If noncompliance is proved, laboratory costs will be paid by the Contractor.
5. Proof of noncompliance will make the Contractor liable for any corrective action which the Owner feels is prudent, including complete removal and replacement of defective material.
6. All subsequent tests on materials replaced as a result of prior failure will be paid by the Contractor.

5.10.3 Nothing contained herein is intended to imply that the Contractor does not have the right to have tests performed on any material at any time for his own information and job control so long as the Owner does not assume responsibility for costs or for giving them consideration when appraising quality of materials. Any modification of, or elaboration on, these test procedures which may be included for specific materials under their respective sections in the technical provisions shall take precedence over these procedures.

5.11 Removal of Defective Work: If any materials furnished under this Contract are condemned by the Owner and/or Architect/Engineer, the Contractor shall, after having received notice from the Owner and/or Architect Engineer to that effect, proceed to remove from the grounds or buildings all condemned materials, whether worked or unworked, and to take down all portions of the Work which the Owner and/or Architect/Engineer shall by like written notice condemn as unsound or improper or as in any way failing to conform to the Drawings and Specifications, and shall make good all work damaged or destroyed thereby.

5.11.1 Upon notice of condemnation, the Contractor may request to prove, at his sole cost and expense, that the condemned work should be accepted because it meets performance, and other relevant standards.

5.11.2 Should work be identified by either the Architect and/or Owner's designated representative as not being in compliance with the contract document requirements, such work shall be corrected by the contractor at his expense. The approval of work by either the Architect and/or Owner's designated representative does not relieve the contractor from compliance with all requirements of the contract documents where such requirements are not judged at the time of observation of the work due to work sequences by the contractor or the lack of time to judge the performance characteristics of the particular work item.

5.12 Royalties and Patents: The Contractor shall pay all royalties and license fees, and defend all suits or claims for infringement of any patent rights and shall save the Owner harmless from loss on account thereof, except that the Owner shall be responsible for all such royalties and license fees and loss when a particular design or process, or the product of a particular manufacturer or manufacturer or manufacturers is specified; provided, however, if the Contractor has reason to believe the design, process or product specified constitutes an infringement of a patent, he shall be responsible for such royalties, license fees and loss unless he promptly gives such information to the Owner and the Architect/Engineer.

5.13 Equal Materials: It is not the intent of the Specifications to limit materials to the product of any particular manufacturer. Where definite materials, equipment and/or fixtures have been specified by name, manufacturer or catalog number, it has been done so as to set a definite standard and a reference for comparison as to quality, application, physical conformity, and other characteristics. It is not the intention to discriminate against or prevent any dealer, jobber or manufacturer from furnishing materials, equipment, and/or fixtures which meet or exceed the characteristics of the specified items. Substitution of materials shall not be made without prior written approval from the owner and the Architect/Engineer.

5.13.1 The Contractor shall be responsible for any additional costs or delays resulting from having furnished materials, equipment or fixtures other than those specified, and shall reimburse the Owner for any increased design costs resulting from such substitutions.

5.14 Shop Drawings and Samples:

5.14.1 Shop Drawings are drawings, diagrams, illustrations, schedules, performance charts, brochures and other data which are prepared by the Contractor or any Subcontractor, manufacturer, supplier or distributor, and which illustrate some portion of the Work.

5.14.2 Samples are physical examples furnished by the Contractor to illustrate materials, equipment or workmanship, and to assist in the establishment of standards by which the Work will be judged.

5.14.3 The Contractor shall submit, with reasonable promptness and in orderly sequence, all Shop Drawings and Samples required by the Contract Documents, or subsequently

required by the Architect/Engineer as covered by contract modifications. The Contractor shall review them for compliance with Contract Documents and shall certify that he has done so by stamp, or otherwise, affixed to each copy thereof. Submittal data presented without such certification will be returned without review or other comment, and any delay resulting therefrom will be the Contractor's responsibility.

5.14.4 Shop Drawings and Samples shall be properly identified, as specified or as the Owner and/or the Architect/Engineer may require. At the time of submission, the Contractor shall inform the Owner and the Architect/Engineer in writing of any deviation in the Shop Drawings or Samples from the requirements of the Contract Documents.

5.14.5 By submitting Shop Drawings and Samples, the Contractor thereby represents that he has determined and verified all field measurements, field construction criteria, materials, catalog numbers and similar data, or will do so, and that he has checked and coordinated each Shop Drawing and Sample with the requirements of the Work and of the Contract Documents and he shall so certify as required by paragraph 5.14.3.

5.14.6 The Architect/Engineer, or the Owner if required by Supplementary General Conditions, will review and approve the Shop Drawings and Samples with reasonable promptness, but only for conformance with the design concept of the Project and with the information given in the Contract Documents. The approval of a separate item shall not indicate approval of an assembly in which the item functions. The approval of the Shop Drawings or Samples shall not relieve the Contractor of responsibility for any deviation from the requirements of the Contract Documents unless the Contractor has informed the Owner and the Architect/Engineer in writing of such deviation at the time of submission and the Owner or the Architect/Engineer has not objected to the specific deviation. The approval shall not relieve the Contractor from responsibility for errors or omissions in the Shop Drawings or Samples.

5.14.7 The Contractor shall make any corrections required and shall resubmit the required number of corrected copies of the Shop Drawings or new Samples of materials until approved. The Contractor shall direct specific attention in writing to any new revisions other than the corrections requested on previous submissions.

5.14.8 No work requiring a Shop Drawing or Sample Submission shall be commenced until the submission has been approved. All such work shall be in accordance with approved Shop Drawings and Samples.

5.14.9 All submittals will be subject to review by the Owner and routine review procedures shall be in accordance with those established by the Owner at a preconstruction conference held at the start of the Work. Items on which submittals are required are listed in these specifications but failure to list an item does not exempt the Contractor from being required to submit on such items if requested by the Architect/Engineer and/or the Owner.

5.15 Cleaning:

5.15.1 The Contractor shall at all times keep the premises clean and free from accumulation of waste materials or rubbish caused by the work under his contract.

5.15.2 Upon completion of the Project, and prior to the final inspection, the Contractor shall have the premises in a neat and clean condition.

ARTICLE VI. CONTRACT CHANGES

6.1 Change Orders: A Change Order is a written order to the Contractor signed by the Owner and the Architect/Engineer issued after execution of the Contract, authorizing a change in the Work or an adjustment in the Contract Sum or the Contract Time. The Contract Sum and the Contract Time may be changed only by Change Order. A Change Order signed by the Contractor indicates his agreement therewith, including the adjustment in the Contract Sum or the Contract Time.

6.1.1 The Owner, without invalidating the Contract, may order changes in the Work within the general scope of the Contract consisting of additions, deletions or other revisions, and the Contract Sum and the Contract Time will be adjusted accordingly. All such changes in the Work shall be authorized by Change Order, and shall be performed under the applicable conditions of the Contract Documents. If such changes cause an increase or decrease in the Contractor's cost of, or time required for, performance of the Contract, an equitable adjustment shall be made and confirmed in writing in a Change Order.

6.1.2 It is recognized by the parties hereto and agreed by them that the specifications and drawings may or may not be complete or free from errors, omissions and imperfections or require changes or additions in order for the work to be completed to the satisfaction of Owner and that, accordingly, it is the express intention of the parties, notwithstanding any other provisions in this Contract, that any errors, omissions or imperfections in such specifications and drawings, or any changes in or additions to same or to the work ordered by Owner and any resulting delays in the work or increases in Contractor's costs and expenses, shall not constitute or give rise to any claim, demand or cause of action of any nature whatsoever in favor of Contractor, whether for breach of contract, quantum merit, or otherwise; provided, however, that Owner shall be liable to Contractor for the sum stated to be due Contractor in any Change Order approved and signed by both parties, it being agreed hereby that such sum, together with any extension of time contained in said Change Order, shall constitute full compensation to Contractor for all costs, expenses and damages to Contractor, whether direct, consequential or otherwise in any wise incident to, arising out of, or resulting directly or indirectly from the work performed by Contractor under such Change Order.

6.1.3 Procedures for administration of Change Orders shall be established by the Owner and stated in Supplementary General Conditions.

6.1.4 If the Contractor intends to assert a claim for an adjustment of cost or time over and above any adjustment already being granted in a Change Order, he must, within thirty (30) calendar days after receipt of a written change order, or oral or written order to proceed with a proposed change under paragraph 6.1, or the furnishing of a written notice under paragraph 6.3.1, submit to the Owner a written statement setting forth in detail the nature and monetary extent of such claim.

The 30-day period of time for submission of such claim may be extended only by written agreement signed by the Owner. Except for claims based on defects in specifications furnished by the Owner, no claim for any change under 6.3.1, shall be allowed for any costs incurred more than twenty (20) days before the Contractor gives written notice as therein required; provided that, in the case of defects in specifications furnished by the Owner, the adjustment in cost shall include only those increased direct costs reasonably and necessarily incurred by the Contractor as a result of such defective specifications.

6.1.5 Except as provided above, no order, oral statement, or direction of the Owner or his duly appointed representative shall be treated as a change under this article or entitle the Contractor to an adjustment thereunder.

6.1.6 The Contractor agrees that the Owner or any of its duly authorized representatives shall have access and the right to examine any directly pertinent books, documents, papers, and records of the Contractor. Further, the Contractor agrees to include in all its subcontracts a provision to the effect that the subcontractor agrees that the Owner or any of its duly authorized representatives shall have access to and the right to examine any directly pertinent books, documents, papers and records of such contractor relating to any claim arising from this contract, whether or not the subcontractor is a party to the claim. The period of access and examination described herein which relates to appeals under the Disputes article of the contract, litigation, or the settlement of claims arising out of the performance of this contract shall continue until final disposition of such claims, appeals or litigation.

6.2 Unit Prices: If unit prices are stated in the Contract Documents or subsequently agreed upon, and if the quantities originally contemplated are so changed in a proposed Change Order that application of the agreed unit prices to the quantities of work proposed will cause substantial inequity to the Owner or the Contractor, the applicable unit prices shall be equitably adjusted as provided in the Special Conditions.

6.3 Claims for Additional Costs:

6.3.1 If the Contractor wishes to make a claim for an increase in the Contract Sum, he shall give the Owner and the Architect/Engineer written notice thereof within twenty (20) days after the occurrence of the event giving rise to such claim. This notice shall be given by the Contractor before proceeding to execute the work, except in an emergency endangering life or property in which case the Contractor shall proceed in accordance with paragraph 5.8.2. No such claim shall be valid unless so made. If the Owner and the Contractor cannot agree on the amount of the adjustment in the Contract Sum, it shall be determined by administrative procedures as provided by paragraph 4.6. Any change in the Contract Sum resulting from such claim shall be authorized by Change Order.

6.3.2 If the Contractor claims that additional cost is involved because of, but not limited to, (1) any written interpretation of the Contract Documents, (2) any order by the Owner to stop the Work pursuant to paragraph 4.4.2 where the Contractor was not at fault, (3) any written order for a minor change in the Work issued pursuant to paragraph 6.4, the Contractor shall make such claim as provided in paragraph 6.3.1.

6.3.3 Should the Contractor or his Subcontractors fail to call attention of the Architect/Engineer to obvious discrepancies or omissions in the Bid Documents during the pre-bid period, but claim additional costs for corrective work after contract award, the Owner may assume an intent to circumvent competitive bidding for necessary corrective work. In such case, the Owner may choose to let a separate contract for the corrective work. Claims for time extensions or for extra cost resulting from delayed notice of contract document discrepancies or omissions will not be considered by the Owner.

6.4 Claims for Additional Time: The Contractor shall make claims for additional time accordance with Article VIII.

6.5 Minor Changes: The Architect/Engineer, with concurrence of the Owner, will have authority to order minor changes in the Work not involving an adjustment in the Contract Sum or an extension of the Contract Time. Such changes shall be effected by written order which the Contractor shall carry out promptly.

6.6 Administration: All changes in the Contract shall be administered in accordance with procedures approved by the Owner.

6.6.1 Routine changes in the Construction Contract shall be formally initiated by the Project Architect/Engineer by means of a Change Request form detailing requirements of the proposed change for pricing by the Contractor. This action may be preceded by communications between the Contractor, Architect/Engineer, Owner and Using Agency concerning the need and nature of the change, but such communications shall not constitute a basis for beginning the proposed work by the Contractor. Except for emergency conditions defined below, approval of the Contractor's cost proposal by the Architect/Engineer, Using Agency and Owner will be required for authorization to proceed with the Work being changed. The Owner will not be responsible for the cost of work changed without prior approval and the Contractor may be required to remove work so installed.

6.6.2 All proposed costs for change order work must be supported by itemized accounting of material, equipment and associated itemized installation costs in sufficient detail to permit analysis by the Architect/Engineer and Owner using current estimating guides and/or practices. Photocopies of Subcontractor and significant vendor proposals shall be furnished unless specifically waived by the Owner. Contractor shall provide written response to change request within 20 days of receipt.

6.6.3 Any unexpected circumstance which necessitates an immediate change in order to avoid a delay in progress of the Work shall be expedited by verbal communication and authorization between the Contractor, Architect/Engineer, Owner and Using Agency, with written confirmation following as soon as may be practical.

Should consultation with all other interested parties be precluded by events, the Owner may act alone for the State. A limiting not-to-exceed estimate of cost will be requested prior to authorizing Work to proceed. Should a cost estimate be impractical for any reason, the Owner may authorize the use of detailed cost records of such work to establish and confirm the actual costs for documentation in a formal Change Order.

6.6.4 Emergency changes to save life or property may be initiated by the Contractor alone (see paragraph 5.8.2) with the claimed cost of such work to be fully documented as to necessity and detail of the reported costs in accordance with paragraph 6.3.1.

6.6.5 The amounts that the Contractor or his Subcontractors add to a Change Order for profit and overhead will also be considered by the Owner before approval is given. The amounts established hereinafter are the maximums that are acceptable to the Owner without a full and complete justification acceptable to the Owner.

1. For work performed by his forces, the Contractor will be allowed the actual amount for materials, the total amount of wages paid for labor, and the total cost of Federal Old Age Benefit (Social Security Tax) and of Worker's Compensation and Comprehensive General Liability Insurance, plus Bond cost if the size of the change warrants revision of the Bonds. To the total of the above costs, the Contractor will be allowed to add a percentage as noted below to cover overhead and profit combined. Overhead shall be considered to include insurance other than mentioned above, field and office supervisors and assistants, use of small tools, incidental job burdens and general Home Office expenses, and no separate allowance will be made therefore. Allowable percentages for overhead and profit on changes will not exceed 15% on the first $10,000.00, 10% on the next $10,000.00 and 7-1/2% on the balance over $20,000.00, for any specific Change Order.

2. For subcontracted work the Subcontractor shall figure his costs, overhead and profit as described above for Contractor's work and to that total cost the Contractor will be allowed to add a maximum of 10% on the first $10,000.00, 7-1/2% on the next $10,000.00 and 5% on the balance over $20,000.00.

3. For small Change Orders, the allowance to the Contractor for profit and overhead for work done by his own forces or by Subcontractors will be a minimum of $50.00.

4. On changes involving both additions and deletions, percentages for overhead and profit will be allowed only on the net addition.

5. The owner does not accept and will not pay for additional contract cost detailed by accounting records under the title of Extended Overhead or Cost Damages caused by Delays.

6. The Owner reserves the right of ownership of any time identified as AFloat Time, where such time is the time between the Contractor's scheduled completion and the date of completion as stipulated in the contract award. The owner reserves the right of ownership of this time, without sacrificing the choice to determine that the work of the contract has been completed prior to the stipulated contract time in the awarded contract, thereby allowing work completion which may result in the possible use and benefit by the owner prior to the scheduled completion date.

ARTICLE VII. CONTRACT PAYMENTS

7.1 Contract Price Breakdown: Upon execution of the Contract by the Owner and the Contractor, the Contractor shall submit to the Owner and the Architect/Engineer for approval a breakdown of the Contract price, itemizing material and labor for the various classifications of the Work. The breakdown will be used as the basis for the progress payments of the Contract.

7.2 Progress Payments: Payment will be made to the Contractor upon monthly certificates as provided hereinafter for the Work performed, and materials in place or on the site, suitably stored and protected or on other sites agreed to by the Owner and the Contractor.

7.2.1 Once each calendar month, the Owner shall make a progress payment to the Contractor on the basis of a certified estimate, approved by the Architect/Engineer, of the Work performed during the preceding calendar month under this Contract, including an affidavit that all payrolls, bills for labor, materials, equipment, or other indebtedness connected with such work have been paid or will be paid within thirty days after receipt of the progress payment, or within the period of time required by Article 601f, Texas Civil Statutes; but to insure the proper performance of this Contract, the Owner shall retain not less than five percent (5%) of the amount of each estimate until final completion and acceptance of all Work covered by this Contract: Provided that the Owner, at any time after fifty percent (50%) of the Work has been completed, finds that satisfactory progress is being made, may make any of the remaining progress payments in full when a ten percent (10% retainage rate has been in effect; and provided further that, upon completion and acceptance of each separate building, public work, or other division of the Contract on which the price is stated separately in the Contract, payment may be made in full including retained percentages thereon less authorized deductions. After Substantial Completion of the Work the Owner shall, upon application by the Contractor approved by the Architect/Engineer, and without terminating the Contract, make payment of the balance due for that portion of the Work fully completed and accepted. If the remaining balance for Work not fully completed or corrected is less than the retainage stipulated in the Contract Documents, and if bonds have been furnished as provided in Article III, such payment shall be made under the terms and conditions governing final payment, and shall

not constitute a waiver of claims. Final payment shall be made after completion of the Work by the Contractor in accordance with the Contract Documents.

1. The provisions of Article 601f, Texas Civil Statutes (T.C.S.) Apply to payments under this Contract.

7.2.2 In preparing estimates all material delivered and labor performed shall be included in the progress upon which payment is based.

7.2.3 The Owner may withhold or, on account of subsequently discovered evidence, nullify that part of any certificate to such extent as may be necessary to protect the Owner from loss on account of:

.1 Defective work not remedied.
.2 Damage to work of another contractor.
.3 Failure to maintain scheduled progress.
.4 Receipt of written notice by the Owner of unpaid bills, as stipulated in Sec. 53.232, Property Code, T.C.S., if the Contractor has not provided a payment bond and if the Contract Sum does not exceed $25,000.00. Any funds so withheld shall be released to the Contractor if he furnishes a bond for release of lien as provided in Sec. 53.236, Property Code, T.C.S. When the above grounds are removed, payment will be made for amounts withheld because of them.
.5 Failure to furnish all close-out documents by the contract documents.

7.2.4 All material and work covered by partial payments made shall thereupon become the sole property of the Owner, but this provision shall not be construed as relieving the Contractor from the sole responsibility for the care and protection of materials and work upon which payments have been made or the restoration of any damaged work, or as a waiver of the right of the Owner to require the fulfillment of all the terms of the Contract.

7.2.5 Payments to the Contractor shall not be construed to release the Contractor or his surety from any obligations under this Contract.

7.2.6 On any Contract where the total Contract Price estimated at the time of execution will be $400,000.00 or more, all retainage withheld at a rate in excess of five percent (5%) shall be deposited by the Owner in an interest bearing account and the interest earned on this investment, together with the principal, paid to the Contractor upon completion of the Contract.

7.2.7 Retainage for Projects administered by the General Services Commission will be governed by the following provisions:

1. For projects not exceeding $400,000.00 in estimated cost at time of Contract Award, the initial retainage rate will be ten percent (10%).
2. The Retainage rate for Contracts estimated at the time of award to equal or exceed $400,000.00 will be five percent (5%) of the amount of each progress payment until final or substantial completion of the Project as provided in paragraph 7.2.1.

7.2.8 Good Faith Effort Program (GFEP)

State agencies are required to make a good faith effort to assist historically underutilized businesses (HUBs) in receiving contract awards issued by the State, see Tex. Govt. Code Ann. Title 10, Subtitle D, Chapter 2161 (formerly Tex. Rev. Civ. State. Ann. Art. 601b). The General Services Commission rules, 1 TAC 111.11-111.24, outlines the states policy to encourage the use of HUBs by state agencies and to assist agencies to achieve these

goals through race, ethnic, and gender neutral means. The goal of this program is to promote full and equal business opportunity for all businesses in state contracting.

In accordance with the States policy of encouraging the use of HUBs in state procurement, the State shall make a good faith effort to utilize HUBs in contracts for commodities and service purchases. The state will achieve the annual program goals by contracting directly with HUBs or indirectly through subcontracting opportunities. Therefore, any business that contracts with the State (Contracting Party) shall be required to make a good faith effort to award necessary subcontracts to HUBs in accordance with GSC Rule 111.13(b). Also, see Rule 111.13(c)(7). The annual program goal for all building construction contracts an agency expects to award in a fiscal year is 25.1% for Black Americans, Hispanic Americans, and American Women, and 1.0% for Asian Pacific Americans and Native Americans. This Good Faith Effort Program goal does not prevent any business group from participating in contracting opportunities with the State of Texas.

A subcontractor is an entity that enters into a contract with a contractor (vendor) to provide a portion of the goods or services for which the contractor is responsible under the terms of its contract with the State. By implementing the following procedures, a contractor shall be presumed to have made a good faith effort by complying with the criteria set forth below:

1. To the extent consistent with prudent industry practice, divide the contract work into reasonable lots.

2. Notify HUBs of the work that the contractor intends to subcontract. The notice shall be in writing. The notice shall include a description of the subcontracting opportunities and identify the location to review contract specifications. The notice shall be provided to potential subcontractors prior to submission of the contractor's bid. (Copy of notice or solicitation shall be submitted at the time of bid or within 14 calendar days of bid opening).

3. The contractor shall provide notice as required in (2) above with sufficient time to allow all interested parties the opportunity to participate effectively. The contractor shall send such notice to at least five businesses in the current GSC directory of certified HUBs that perform the type of work required in the area in which the work will be performed.
4. If a non-Hub subcontractor is selected through means other than competitive bidding, or a HUB bid is the lowest price responsive bidder to a competitive bid, it is not selected, the contractor will be required to document the selection process.
5. The contractor shall maintain business records documenting its compliance and shall make a compliance report to the contracting state agency and report in the format required by the contracting state agency's contract documents, provided that reporting shall be required at least once for each calendar quarter during the term of the contract.
   NOTE: When the contractor is a HUB, it must satisfy the good faith effort requirements by performing at least 25% of the contract with its employees. The HUB prime may subcontract the remaining 75% of the contract with HUB or non-HUB subcontractors. Any contractor that seeks to satisfy the good faith effort requirement in this manner shall report quarterly to the contracting state agency, in the form required by the contracting state agency, the volume of work performed under the contract and the portion of the work that was performed with its employees. If a HUB contractor performs less than 25% of the cumulative total contract with its employees, then for the next quarter, the contractor shall report its subcontractors as required by a non-HUB contractor.

If an award is issued, do you plan to utilize a Subcontractor or Supplier for all or any portion of the contract? _____Yes _____No
If yes, what percentage of work will be subcontracted with HUBs? _____%
Are you certified as a Texas Historically Underutilized Business (HUB)?
_____ Yes _____ No
Upon notice of award, the contractor will be required to prepare and submit HUB-SUB forms GFEP, DGFE, HUB-LOI, HUB-SF, NON-HUB-PAR, HUB-PAR-A within the designated time period stated on each form. **(NOT REQUIRED TO BE COMPLETED FOR BID SUBMITTAL)**

7.3 Claims for Unpaid Labor, Materials and or Services:

7.3.1 When the value of the Contract between the Owner and the Contractor is not in excess of $25,000.00, claimants are referred to Texas Property Code, Section 53.231, Texas Civil Statutes, for requirements that are prerequisite to the filing of a valid lien on funds unpaid to the Contractor at the time of filing of the claim.

7.3.2 When the Contract between the Owner and the Contractor is in excess of $25,000.00, claims must be sent directly to the Contractor and his surety in accordance with Article 5160, Texas Civil Statutes. The Owner will furnish, in accordance with such Article, a copy of the Payment Bond as provided therein to claimants upon their request.

All claimants are cautioned that no lien exists on the funds unpaid to the Contractor on such Contract, and that reliance on notices sent to the Owner may result in loss of their rights against the Contractor and/or his surety. The Owner is not responsible in any manner to a claimant for collection of unpaid bills, and accepts no such responsibility because of any representation by any agent or employee.

7.3.3 The contractor shall comply with provisions of the Texas Property Code, Article 53.021, TCS relating to applicable liens by claimants in both the mechanic and service provider categories.

1. The Owner will consider the provisions of these statutes within the consideration for payment on the contract.

ARTICLE VIII. CONTRACT COMPLETION TIME

8.1 Notice to Proceed: The Contract Time will begin on the date designated in the Notice to Proceed issued by the Owner and the Contractor is required to complete the Work in the time that is stated in the Contract.

8.2 Work Progress Schedule: Within three (3) weeks after receipt of a Notice to Proceed, if requested by the Owner, the Contractor shall submit in duplicate to the Owner and the Architect/Engineer for review an estimated progress schedule for the Work in relation to the entire Project. This schedule shall indicate the dates for starting and completing the various classifications of construction.

8.2.1 A Work Progress Schedule will be required on all Projects administered by the General Services Commission as described in paragraph 8.2.

8.3 Delays and Extension of Time:

8.3.1 The Contractor may be granted an extension of time because of changes ordered in the Contract or because of strikes, lockouts, fire, unusual delay in transportation, unavoidable casualties, inclement weather in excess of normal, or any cause beyond the Contractors control, which constitute a justifiable delay. The Owner will extend the time subject to the following provisions.

8.3.2 Claims for extensions of time must be made in writing within thirty (30) calendar days after the occurrence of the delay. All time extension claims shall be supported by sufficient written evidence to justify the claim. In the case of a continuing cause of delay, only one claim is necessary. Claims for extensions of time shall be stated in numbers of whole or half calendar days. In case of claims for extension of time because of inclement weather in excess of normal, such extension of time shall be granted only because such inclement weather prevented the execution of major critical items of work.

8.3.3 Although the Owner may extend contract time for justifiable reason, the Contractor shall bear all responsibility for financial risks which may accrue from various causes of delay in construction progress. However, for delays caused by failure of the Architect/Engineer or Owner to make timely decisions or to take timely action, a claim for additional costs will be considered.

8.4 Failure to Complete Work on Time: The time set forth in the Contract for the completion of Work is an essential element of the Contract. Contractors failure to complete the Work within such time will cause damage to the Owner. Where appropriate, the value of such damages may be stated in Supplementary General Conditions.

8.4.1 Should the Contractor fail to complete the Work within the Contract period, including all officially approved extensions thereto, the Owner may collect from the Contractor or deduct from any funds owed him an amount not to exceed the actual damages caused by such delay. Actual damages shall include those specifically enumerated in Supplementary Conditions as well as any others which can be proven, including the cost of additional administrative or Architect/Engineer services.

8.4.2 After Final Inspection by the Owner, the Contractor will be allowed a period of thirty (30) days (unless extended by mutual agreement or provision of the Contract) within which to correct all deficiencies listed by the report of final inspection. Failure of the Contractor to complete such corrections within the stipulated time will be reported to the Contractors surety for correction on projects exceeding $25,000.00 in cost. In projects of $25,000.00 cost or less, the Contractor only will be notified of the deficiencies. In the report of deficiency, the Contractor and surety (if any) will be informed that, should corrections remain incomplete for fifteen (15) additional days, the Owner may initiate action to complete corrective work out of remaining Contract funds in accordance with Paragraph 4.4 (Contract Termination).

ARTICLE IX. CONTRACT SUBSTANTIAL COMPLETION

9.1 Date of Substantial Completion: The date of Substantial Completion of the Work, or designated portion thereof, is the date jointly certified by the Architect/Engineer, Owner and Contractor when construction is so sufficiently complete, in accordance with the Contract Documents, that the Owner may utilize the Work, or a designated portion thereof, for the use for which it is intended.

9.1.1 The contractor shall be responsible for furnishing all close-out documents required by the contract prior to the determination date of substantial completion. These documents shall be furnished to the Owner prior to transfer of utilities, insurance, permanent operation of equipment and maintenance.

9.2 Certification: Should the Owner wish to use or occupy a structure, or part thereof, prior to final completion, and the Contractor determines that the Work, or a designated portion thereof acceptable to the Owner, is substantially complete, the Contractor shall prepare for submission to the Architect/Engineer a list of items to be completed or corrected. The failure to include any items on such list does not alter the responsibility of the Contractor to complete all Work in accordance with the Contract Documents. When the Architect/Engineer on the basis of an inspection determines that the Work is substantially complete, he will then prepare a Certificate of Substantial Completion which shall establish the Date of Substantial Completion; shall state the responsibilities of the Owner and the Contractor for maintenance, heat, utilities, operation of permanent equipment, and insurance; and shall fix the time within which the Contractor shall complete the items listed therein. The Certificate of Substantial Completion shall be submitted to the Owner and Contractor for their written acceptance of the responsibilities assigned to each of them in such Certificate.

9.3 Additional Inspection Costs: Contractor shall be charged with any cost for reinspection resulting from substantial differences between the Contractors list of items to be completed or corrected and the list of items resulting from the Architect/Engineer inspection.

9.3.1 Should corrective work following Final Inspection require more than one reinspection after notification by the Contractor that corrections are complete, the cost of subsequent inspections shall be deducted by the Owner from funds remaining unpaid to the Contractor. Should an inspection trip for verification of completion status be required by failure of the Contractor to notify the Architect/Engineer or Owner of correction completion status at the time provided by paragraph 8.4.2, the cost of any required subsequent reinspections shall be deducted by the Owner from funds remaining unpaid to the Contractor. Work added to the Contract by Change Order after Final Inspection shall not be considered as corrective work in connection with timely completion or reinspection.

9.4 Occupancy or Use: Occupancy or use of a building, facility, or any part thereof may be made in accordance with paragraph 9.2.

ARTICLE X. CONTRACT FINAL ACCEPTANCE AND PAYMENT

10.1 Notification: When the Work is completed, the Contractor shall notify the Architect/Engineer in writing that the Work will be ready for final inspection on a definite date. Upon verification by the Architect/Engineer that the Work is ready for final inspection and acceptance, the Owner will within ten (10) calendar days make a final inspection and, when the Work is found acceptable under the Contract Documents and the Contract is fully performed, make final payment to the Contractor.

10.2 Final Payment Documentation: Neither the final payment nor the remaining retained percentage shall become due until the Contractor submits to the Architect/Engineer for transmittal to the Owner (1) an affidavit that all payrolls, bills for materials and equipment, and other indebtedness connected with the Work for which the Owner or his property might in any way be responsible, have been paid or will be paid or otherwise satisfied within thirty days after receipt of final payment from the Owner, or within the period of time required by Article 601f, Texas Civil Statutes (T.C.S.), (2) consent of surety, if any, to final payment and (3), if required by the Owner, other data establishing payment or satisfaction of all such obligations, such as receipts, releases and waivers of claims arising out of the Contract, to the extent and in such form as may be designated by the Owner. If any subcontractor refuses to furnish a release or waiver required by the Owner, the Contractor may furnish a bond satisfactory to the Owner to indemnify him against any such claim.

10.2.1 When the value of the Contract between the Owner and the Contractor is not in excess of $25,000.00, final payment to the Contractor will be withheld for a period of sixty (60) days following the last date upon which contracted work is performed, or on which contracted material is delivered to the job site, in order that unpaid claimants, who have furnished labor and/or materials for the Project to the Contractor, may be provided the time permitted by State Property Code Sec. 53, V.T.C.S., to file claims against funds still due the Contractor.

10.3 Final Payment: The making of final payment shall constitute a waiver of all claims by the Owner except those arising from: (1) faulty or defective Work appearing after Substantial Completion; (2) failure of the Work to comply with the requirements of the Contract Documents; or (3) terms of any special warranties required by the Contract Documents. Acceptance of final payment shall constitute a waiver of all claims by the Contractor except those specifically enumerated at the time of final payment.

ARTICLE XI. CONTRACT WARRANTY AND GUARANTEE

11.1 One Year Warranty: Except as otherwise specified, the Contractor warrants and guarantees all Work against defects in materials, equipment or workmanship for one (1) year from the date of Substantial Completion of the entire project or designated portions thereof.

11.2 Upon receipt of written notice from the Owner of the discovery of any defects, the Contractor shall remedy the defects and replace any property damaged therefrom occurring within the warranty and guarantee period. If the Contractor, after notice, fails to proceed promptly and remedy within 30 days or within another period of time which has been agreed to in writing, in compliance with the terms of the warranty and guarantee, the Owner may have the defects corrected and the Contractor and his surety shall be liable for all expenses incurred.

ARTICLE XII. SUPPLEMENTAL AND SPECIAL CONDITIONS

12.1 General: When the Work contemplated by the Owner is of such a character that the foregoing Uniform General Conditions of the Contract cannot adequately cover necessary and additional contractual relationships, the Contract may include Supplemental and Special Conditions as described below:

12.1.1 Supplemental Conditions may describe the standard procedures and requirements of contract administration followed by a contracting agency of the State. Supplemental Conditions may expand upon matters covered by the Uniform General Conditions, where necessary, provided the expansion does not weaken the character or intent of the Uniform General Conditions. Supplemental Conditions are of such a character that it is to be anticipated that a contracting agency of the State will normally use the same, or similar, conditions to supplement each of its several projects.

12.1.2 Special Conditions Shall relate to a particular project and be peculiar to that project but shall not weaken the character or intent of the Uniform General Conditions.

12.2 Federally Funded Projects: On Federally funded projects, the Owner may waive, suspend or modify any Article in these Uniform General Conditions which conflicts with any Federal statue, rule, regulation or procedure, where such waiver, suspension or modification is essential to receipt by the Owner of such Federal funds for the project. In the case of any project wholly financed by Federal funds, any standards required by the enabling Federal statute, or any Federal rules, regulations or procedures adopted pursuant thereto, shall be controlling.

END OF UNIFORM GENERAL CONDITIONS

Special Condition to the Supplemental General Conditions:

The HUB Subcontracting Plan is not Required for this project.

PROJECT INFORMATION

Reference is made to the following items in the SGC which do not apply to this contract.

SGC-2	**Item 2.19**	**HUB Subcontracting Plan**
SGC-4	**Item 3.3**	**5. State of Texas HUB Subcontracting Information Sheets and required forms**
SGC-9	**Item 4.7**	**State of Texas HUB Subcontracting Plan**
	Item 4.8	**DBE or HUB Information**

A complete list of all State of Texas certified HUBs may be accessed via the internet at http://ww.tbpc.state.tx.us/cmbl.

The Business Opportunity Program Section of the Texas Department of Transportation is dedicated to providing information to vendors on how to do business with TxDOT. If you have any questions, feel free to contact them at 512-486-5500.

Use only if a waver was granted by BOP on Roofing Radio Tower jobs

Make changes to this to match SGC of 3-1-06

INDEX

TO

SUPPLEMENTARY GENERAL CONDITIONS

Article No.		Article Title		Page No.
1	(I)	**Special Notice**		1
2	(II)	**Definitions**		
		2.1	Addenda	1
		2.2	Bid Error	1
		2.3	Bidder	1
		2.4	Calendar Day	1
		2.5	Change Order	1
		2.6	Claim	1
		2.7	Commission	1
		2.8	Completion Contractor	1
		2.9	Consulting Architect/Engineer	1
		2.10	Contract	1
		2.11	Contract Completion Date	2
		2.12	Contract Time	2
		2.13	Contractor	2
		2.14	Debar (Debarment)	2
		2.15	DBE – Disadvantaged Business Enterprise	2
		2.16	Department	2
		2.17	Dispute	2
		2.18	HUB – Historically Underutilized Business	2
		2.19	HUB - Subcontracting Plan	2
		2.20	Mathematically Unbalanced Bid	3
		2.21	Materially Unbalanced Bid	3
		2.22	Non-Resident Bidder	3
		2.23	Owner	3
		2.24	Owner's Representative	3
		2.25	Payment Bond	3
		2.26	Performance Bond	3
		2.27	Project Manager	3
		2.28	Proposal	3
		2.29	Proposal Guaranty	3
		2.30	Subcontractor	3
		2.31	Texas Commission on Environmental Quality	3
		2.32	Wage Rates	3
		2.33	Working Day	
3	(III)	**Instructions to Bidders**		4
		3.1	Request for Proposal Forms	4
		3.2	Non-issuance of Proposal Forms	4
		3.3	Contents of Proposal Forms	4
		3.4	Addendum to Proposed Contract	4
		3.5	Preparation of Proposal	5
		3.6	Rejection of Proposal Containing Alterations, Erasures or Irregularities	5
		3.7	Proposal Guaranty	6

		3.8	Return of Proposal Guaranty	6
		3.9	Delivery of Proposal	7
		3.10	Revision of Proposal	7
		3.11	Withdrawal of Proposal	7
		3.12	Public Opening of Proposals	7
		3.13	Disqualification of Bidder	7
		3.14	Debt to the State	7
		3.15	Gratuities	7
		3.16	Child Support Order Compliance	7
4	(IV)	**Award and Execution of Contract**		8
		4.1	Consideration of Bids	8
		4.2	Award of Contract	8
		4.3	Rejection of Contract	8
		4.4	Defer	8
		4.5	Execution of Contract, Bonds, Certificate of Insurance, Furnishing Ownership Information, DBE/HUB Information and List of Quoting Suppliers and Subcontractors	8
		4.6	Claims on Payment Bonds	9
		4.7	State of Texas HUB Subcontracting Plans	9
		4.8	DBE or HUB Information	9
		4.9	Contract Time	9
		4.10	Failure to Execute Contract, Bonds, Certificate of Insurance, Furnish Ownership Information, DBE/HUB Information and the List of Quoting Suppliers and Subcontractors.	10
		4.11	Bid Error	10
		4.12	Preconstruction Conference	10
		4.13	Owner's Representative – Project Manager	10
		4.14	Beginning of Work	10
		4.15	Work Progress Schedule	10
5	(V)	**Contract Drawings and Technical Specifications**		11
		5.1	Interpretation of Plans, Specification	11
		5.2	Verification of Existing Conditions and Dimensions	11
		5.3	Copies Furnished	11
6	(VI)	**Work Requirements**		11
		6.1	Contractor's Responsibilities	11
		6.2	Labor	11
		6.3	Changes in Work	11
		6.4	Change Orders	11
		6.5	Computation of Contract Time for Completion	13
		6.6	Claims for Extension of Working Time	13
		6.7	Failure to Complete Work on Time (Liquidated Damages)	13
		6.8	Suspension of Work	13
		6.9	Installation of Special Equipment	14
7	(VII)	**Payments**		14
		7.1	Application for Partial Payments	14
		7.2	Payments Upon Substantial Completion	14
		7.3	Partial Release of Retainage for Contracts with Separate Period for Vegetative Establishment, Maintenance or Performance (VEMP)	14

		7.4	Payments Upon Termination	15
		7.5	Prompt Payment	15
		7.6	State Auditor	15
8	(VIII)	**Insurance Requirements**		16
		8.1	Responsibility for Damage Claims	17
		8.2	Laws to be Observed	17
		8.3	Workers' Compensation Insurance Coverage	17
9	(IX)	**Subcontractors**		20
10	(X)	**Labor Requirements**		20
		10.1	Minimum Wages	20
		10.2	Record and Inspection	20
11	(XI)	**Tax Exemptions**		20
		11.1	Federal Transportation Tax	20
		11.2	State Sales Tax	21
12	(XII)	**Disputed Matters Resolution/Claims**		21
13	(XIII)	**Miscellaneous Requirements**		21
		13.1	Work Requirements	21
		13.2	Use of Premises	21
		13.3	Federal, State and Municipal Requirements	22
		13.4	State Antiquities Law	22
		13.5	Freezing Weather	23
		13.6	Explosives	23
		13.7	Control of Work	23
		13.8	Sources of Supply and Quality of Materials	23
		13.9	Texas Identification Number	24
		13.10	Signing of Proposal - DBE Activity.	24
		13.11	Responsibility for Damage Claims	24
		13.12	Deficiencies in the Work	24
		13.13	Workers	25
		13.14	Interruption of Business	25
		13.15	Contractor Cost Reduction Proposal	25
		13.16	Temporary Erosion, Sedimentation and Water Pollution Prevention and Control	25

END OF INDEX TO SUPPLEMENTARY GENERAL CONDITIONS

SUPPLEMENTARY GENERAL CONDITIONS

ARTICLE I. SPECIAL NOTICE

These Supplementary General Conditions, Special Conditions and the Specifications bound herein will be subject to all the requirements of the Uniform General Conditions of The Contract, except that these **Supplementary General Conditions and Special Conditions will alter or expand the Uniform General Conditions to cover contract administration procedures** which are standard for the Texas Department of Transportation.

ARTICLE II. DEFINITIONS

The following definitions will prevail in addition to those set forth in Article I of the foregoing Uniform General Conditions.

2.1 Addenda: Official change to the plans, specifications and/or proposal. Addenda will be issued by the Owner/Project Manager only and must be acknowledged by the bidder for his proposal to be read. The official date of the addenda is the correct acknowledgment.

2.2 Bid Error: A mathematical mistake by the prime contractor in the unit price entered into the proposal.

2.3 Bidder: An individual, partnership, limited liability company, corporation or any combination thereof submitting a proposal.

2.4 Calendar Day: A calendar day is any day including Saturdays, Sundays, and legal holidays.

2.5 Change Order: Written agreement entered into between the Contractor and the State covering alteration and changes in plans and/or specifications which are outside the provisions of the contract, but which are necessary to the proper completion of the work.

2.6 Claim: A dispute is defined as a disagreement between TxDOT and a contractor on a contract issue. A claim is defined as a dispute that is not resolved and requires **formal** action by the TxDOT Contract Claims Committee.

2.7 Commission: The Texas Transportation Commission

2.8 Completion Contractor: The individual, corporation, company, partnership, firm or other organization that has contracted to complete the Work for the Surety in a takeover.

2.9 Consulting Architect/Engineer: The term "Consulting Architect/Engineer" will refer to the architectural and/or the engineering staff of the consulting firm(s) designated on the Cover Page and the Title Page of these specifications. If a designation is not made, refer to the Texas Department of Transportation as "Owner".

2.10 Contract: The agreement between the State and the Contractor covering the furnishing of materials and performance of the work. The contract will include, but not be limited to the Plans, Standard Specifications, Addenda, Special Provisions, Special Specifications, Contract Bonds, Supplemental Agreements and Change Orders.

2.11 Contract Completion Date: is the date calculated from the current Contract Time.

2.12 Contract Time: is the period of time from the date computation of time charges will begin as set forth in the Authorization to Begin Work letter to the date stated in the Contract for completion of the Work, or the number of calendar days allowed in the Contract for completion of the Work, plus any Owner approved extensions. Time will be charged for all working days regardless of weather conditions, materials, or supplies which could impede the prosecution of the work.

2.13 Contractor: The individual, corporation, company, partnership, firm or other organization that has contracted to perform the Work under the Contract with the Owner. The Surety becomes the Contractor in a takeover.

2.14 Debar (Debarment): To disqualify (the disqualification of) a Contractor from bidding on or entering into a contract, or from participating as a Contractor or Subcontractor.

2.15 DBE – Disadvantaged Business Enterprise: A small business concern, certified by the Department, which is 51 percent owned by one or more minorities or women, or in the case of a publicly owned business, at least 51 percent of the stock is owned by one or more minorities or women, and whose management and daily business operations are controlled by one or more such individuals.

2.16 Department: Texas Department of Transportation

2.17 Dispute: A dispute is defined as a disagreement between TxDOT and a contractor on a contract issue. A claim is defined as a dispute that is not resolved and requires **formal** action by the TxDOT Contract Claims Committee.

2.18 HUB – Historically Underutilized Business: A corporation, sole proprietorship, partnership, or joint venture formed for the purpose of making a profit, which is certified by the Texas Building and Procurement Commission, and in which 51 percent of the company is owned by one or more persons who are socially disadvantaged because of their identification as members of certain groups including Black Americans, Hispanic Americans, Women, Asian-Pacific Americans, or Native Americans and have suffered the effects of discriminatory practices or similar insidious circumstances over which they have no control; and have a proportionate interest and demonstrate active participation in the control, operation and management of the business affairs.

2.19 HUB - Subcontracting Plan: The purpose of the HUB Program is to promote equal business opportunities for economically disadvantaged persons to contract with the State of Texas in accordance with the goals specified in the State of Texas Disparity Study.

State of Texas HUB application may be found at http://www.tbpc.state.tx.us/hub/forms/indes.html

TxDOT does not endorse any company or individual identified on any listings/directories including or referenced herein. A complete list of all State of Texas certified HUBs may be accessed via the internet at http://www.tbpc.state.tx.us/cmbl/bmblhub.html
or http://www.tbpc.state.tx.us/cmbl/hubonly.html

A State of Texas HUB Subcontracting Plan *must* be filled out and returned with any bid, offer or proposal to be considered responsive. If your response to this solicitation does not include a State of Texas HUB Subcontracting Plan, your response shall be rejected as a material failure to comply with advertised specifications. All prime vendors (HUB or Non-HUB) are required to comply.

2.20 Mathematically Unbalanced Bid: A bid containing lump sum or unit bid items which do no reflect reasonable actual costs plus a reasonable proportionate share of the bidder's anticipated profit, overhead costs and other indirect costs.

2.21 Materially Unbalanced Bid: A bid which generates a reasonable doubt that award to the bidder submitting a mathematically unbalanced bid will result in the lowest ultimate cost to the State.

2.22 Non-Resident Bidder: A bidder whose principal place of business is not in Texas; includes a bidder whose ultimate parent company or majority owner does not have its principal place of business in Texas.

2.23 Owner: The term "Owner" as used throughout these specifications will refer to the Texas Department of Transportation acting through Facilities Management, Maintenance Division, 150 E. Riverside Drive, Fourth Floor-North, Austin, Texas, Phone 512-416-3048, FAX 512-416-3080. **All references for contact with the "Owner" shall be directed to the "Project Manager" in charge of this project** or other designated representative.

2.24 Owner's Representative: The term "Owner's Representative" as used throughout these specifications will refer to the TxDOT "Project Manager", or other designated TxDOT representative. The Project Manager will have total responsibility and control of the construction management of the project. The District on-site representative and the Architectural/Engineering Consultant will serve in a support role for project administration and inspections. The Contractor will only receive direct instructions concerning the project from the Project Manager.

2.25 Payment Bond: A Payment Bond is required if the Contract Price is in excess of $25,000.

2.26 Performance Bond: A Performance Bond is required if the Contract Price is in excess of $100,000.

2.27 Project Manager: The term "Project Manager" as used throughout these specifications will refer to the duly authorized representative of the Texas Department of Transportation. This representative will be designated in writing to the contractor. The Project Manager, or other designated representative, will have total responsibility and control of all decisions regarding payments, enforcement of the contract, materials, and changes in scope of work or schedules.

2.28 Proposal: The offer of the bidder, made out on the prescribed form, giving prices for performing the work described in the plans and specifications, including addenda (if applicable).

2.29 Proposal Guaranty: The security designated in the proposal and furnished by the bidder as a guaranty that the bidder will enter into a contract if awarded the work.

2.30 Subcontractor: An individual, partnership, limited liability company, corporation or any combination thereof to which the Contractor sublets, or proposes to sublet, any portion of a contract.

2.31 Texas Commission on Environmental Quality (TCEQ): Texas Natural Resource Conservation Commission (TNRCC) has changed its name to TCEQ. Therefore all references to TNRCC now refer to TCEQ.

2.32 Wage Rates: Bound with this proposal per Davis-Bacon Wage Determinations issued by the U. S. Department of Labor.

2.33 Working Day: A working day is defined as a calendar day.

ARTICLE III. INSTRUCTIONS TO BIDDERS

3.1 Request for Proposal Forms. A request for a proposal may be made orally, in writing or by Fax.

3.2 Non-issuance of Proposal Forms. The Department will not issue a proposal form requested by a bidder for a building facilities project.

1. For a federal-aid project, if at the time of the request the bidder is disqualified by an agency of the federal government as a participant in programs and activities involving federal assistance and benefits;
2. For all projects, if at the time of the request the bidder is suspended or debarred by order of the Commission, or is prohibited from re-bidding a specific project because of default of the first awarded bid;
3. For all projects, if at the time of the request the bidder has not fulfilled the requirements for qualification.
4. For all projects, if at the time of the request the bidder has failed to attend a mandatory pre-bid conference; or
5. For all projects, if the bidder or a subsidiary or affiliate of the bidder has received compensation from the Department to participate in the preparation of the plans or specifications on which the bid or contract is based.
6. If the bidder is prohibited from re-bidding a specific project because of submitting a bid on the specific project that contained an error resulting in the rejection of bids by the Commission.

3.3 Contents of Proposal Forms. A proposal form will include:

1. The location and description of the proposed work;
2. An estimate of the project costs;
3. The time within which the work is to be completed; and
4. The specifications, special provisions and special specifications
5. State of Texas HUB Subcontracting Information Sheets and required forms.

3.4 Addendum to Proposed Contract. Discrepancies, omissions, or unclear meanings discovered in these specifications and accompanying drawings should be brought to the attention of the Owner as soon as possible. When correction or interpretation is required of the contract documents, an addendum will be issued to all prospective bidders by the Owner.

Such addenda will be placed in the mail not later than seven calendar days prior to the bidding date. It is the responsibility of the bidder to be aware of any addenda issued on this project. The Owner cannot be held responsible for issuing addenda dealing with notice or inquiry received from bidders less than 14 calendar days before the bidding date.

The Owner will not be responsible for changes or interpretations of the contract documents not covered by a duly issued addendum.

Bidders must acknowledge the official date of addenda on the Addendum Acknowledgment page. ***FAILURE TO ACKNOWLEDGE RECEIPT OF AN ADDENDUM WILL RESULT IN THE BID NOT BEING READ.***

3.5 Preparation of Proposal. The bidder will submit its proposal on the forms furnished herein. The proposal form will be completed by filling in each blank box by writing in numbers in ink.

The bidder will submit a price for each lump-sum item for which a bid is requested. Where "Unit Prices" are requested, the bidder will submit a price for each item called for. A bid item left blank, except in the case of an alternate, will constitute an incomplete bid.

The proposal shall be executed in ink in the complete and correct name of the bidder making the proposal and shall be signed by the person or persons authorized to bind the bidder.

3.6 Rejection of Proposal Containing Alterations, Erasures or Irregularities. Proposals may be rejected if they show any alteration of words or figures, additions not called for, conditional or uncalled for alternate bids, incomplete bids, any alteration of words or figures or erasures not initialed by the person or persons signing the proposal, or irregularities of any kind. Bid amount and signatures must be original on the bound pages and not submitted separately. The entire bound proposal - specification must be submitted as the bidder's proposal.

Any proposal that has one or more of the deficiencies listed below will be considered to be non-responsive and will not be read.

1. The proposal certification and/or affirmation are not signed.

2. The proposal guaranty is not in compliance with the requirements contained in Article 3.7 of the Supplemental General Conditions relating to the proposal guaranty.

3. The proposal is submitted by an unqualified bidder.

4. The bidder did not attend a specified mandatory pre-bid conference.

5. The proposal is in a form other than the official proposal form issued to the bidder. Bid amount and signatures must be original on the bound pages and not submitted separately.

6. The proposal was not in the hands of the letting official at the time and location specified in the proposal or amended by official addendum.

7. The bidder modified the proposal in a manner that alters the conditions or requirements for work as stated in the proposal.

8. The proposal submitted has too few or too many bid items due to the bidder not submitting the proposal and all addenda issued.

9. The bidder was not authorized to be issued a proposal under Article III, Item 3.2.

10. If more than one proposal involving a bidder under the same or different names is submitted, the Department will not accept and will not read any of the proposals submitted by that bidder for that project.

11. The bidder fails to acknowledge or improperly acknowledges receipt of each addenda issued (the official date of the addendum is the proper acknowledgment in the designated space).

12. A Bid Bond must be on the form bound in this proposal (the Bid Bond page may be removed for use) or an exact replica thereof. The Bid Bond must have original signatures of the Contractor and Surety and be sealed by the Surety. The required Power of Attorney from the Surety must be attached.

13. The proposal guaranty is less than the amount prescribed by the proposal.

14. The bidder fails to respond to the State of Texas HUB Subcontracting Plan (HSP) as prescribed in this proposal. (This requirement does not apply to projects with Federal funding. Federal funded projects use the Disadvantaged Business Enterprise (DBE) rules)

15. The bidder fails to complete the Unit Prices sheet when included with the proposal forms.

3.7 Proposal Guaranty. The amount of the guaranty will be two percent (2%) of the engineer's estimate rounded to the nearest $1,000.00, not to exceed $100,000.00, as noted on the proposal cover page. The amount of the guaranty will be fixed and not affected by addenda. The amount of a guaranty check and a bid bond will be the same for any given project.

The proposal shall be accompanied by a proposal guaranty in the amount indicated in the proposal. The amount of the proposal guaranty is fixed at the amount shown in the proposal upon release to the public. The proposal guarantee shall be payable to the Texas Transportation Commission and shall be a cashier's check, money order or teller's check drawn by or on a state or national bank, or a savings and loan association, or a state or federally chartered credit union (collectively referred to as "bank"). The type of check or money order must be indicated on the face of the instrument and the instrument must be no more than 90 days old.

A check must be payable at or through the institution issuing the instrument, or must be drawn by a bank on a bank, or payable at or through a bank.

The Department will not accept as a proposal guaranty:
1. Personal checks or certified checks; or
2. Other types of money orders, or

A bidder may submit a bid bond as the required proposal guaranty in lieu of a cashier's check, teller's check or money order. The bid bond must be on the form contained within the proposal provided, or an exact replica thereof. Retyped copies of the bid bond form will not be accepted. Powers of attorney must be attached, and must be for at least the amount specified by the proposal. The bond must bear the impressed seal of the surety company and the name of the bidder, and be signed by the bidder and an authorized representative of the surety company. Bid bonds will only be accepted from surety companies authorized to execute a bond under and in accordance with state law.

3.8 Return of Proposal Guaranty. The proposal guaranty check accompanying this proposal shall be returned to the bidder, no more than 72 hours after bids are opened. The Department will mail the authorized proposal guaranty of all bidders except the apparent low bidder to the address specified on the return bidder's check form included in the proposal. Bid bonds will be retained by the Department, unless in case of the acceptance of the proposal the bidder shall fail to meet a specified goal or fail to execute and file a contract with the required insurance certificates within the prescribed time after its acceptance, in which case the check or bid bond shall become the property of said Commission, and shall be considered as payment for damages due to delay and other inconveniences suffered by said Commission on account of failure of the bidder to execute contract. It is understood that the Commission reserves the right to reject any and all bids. If a contract is executed between bidder and the Department, the Bid Bond shall be null and void. The Department will retain the proposal guaranty of the apparent low bidder until after the contract has been executed and bonded.

3.9 Delivery of Proposal. The bidder shall place the completed proposal-specification (the entire bound set, or Volume one), all forms and certifications required, and the proposal guaranty, in a sealed envelope marked to indicate its contents. When submitted by mail, this envelope shall be placed in another envelope which shall be sealed and addressed as indicated in the official advertisement of the project. It is the bidder's responsibility to ensure that the sealed proposal arrives at the location described in the official advertisement of this project, on or before the hour and date set for the opening thereof, and must be in the hands of the Letting Official by the time, regardless of the method chosen by the bidder for delivery.

3.10 Revision of Proposal. A bidder may change a bid price entered in a proposal before it is submitted by changing the price and initialing the revision with ink. After a proposal is submitted, only an officer of the company can request, in person and on company letterhead, changes to the proposal. A request by telephone, electronic-mail or fax, for a change in a bid price will not be considered.

3.11 Withdrawal of Proposal. A bidder may withdraw a proposal by submitting a request in writing to the Letting Official. The Department will not accept telephone or telegraph requests, but will accept a properly signed Fax request on the Company letterhead. The request must be made by a person authorized to bind the bidder, and must be in the hands of the Letting Official before the scheduled bid opening.

3.12 Public Opening of Proposals. Bids will be opened and read at a public hearing conducted by the Director of the Department's Construction Division, or his or her designee, on behalf of the Commission. Each hearing shall be in the City of Austin, at the time and location specified in the advertisement.

Bids for contracts with an engineer's estimate of less than $300,000.00 may be opened and read at a public hearing conducted by the District Engineer, or his or her designee on behalf of the Commission. Each such hearing shall be held at the District Headquarters in the District in which the work is to occur.

3.13 Disqualification of Bidder. More than one proposal involving an individual, firm or corporation, or any combination thereof under the same or different names will not be considered. Reasonable grounds for believing that any bidder is interested in more than one proposal for the work contemplated will be cause for the rejection of all proposals in which such bidder is interested. Any or all proposals will be rejected if there is reason for believing that collusion exists among the bidders, and all participants in such collusion will not be considered in future proposals for the same work.

3.14 Debt to the State. If the State Comptroller of Public Accounts is prohibited from issuing a warrant to the Contractor because of a debt owed to the State, the State shall apply all payment due the Contractor to the debt or delinquent tax until the debt or delinquent tax is paid in full.

3.15 Gratuities. Commission policy stipulates that Departmental employees cannot accept any benefits, gifts or favors from any person doing business or who reasonably speaking may do business with the Department under this contract. The only exceptions allowed are ordinary business lunches and items approved in advance and in writing by the Executive Director. Failure on the part of the contractor or supplier to honor this policy may result in termination of the contract.

3.16 Child Support Order Compliance. A child support obligor who is more than 30 days delinquent in paying child support and a business entity in which the obligor is a sole proprietor, partner, shareholder or owner with an ownership interest of at least 25 percent is not eligible to receive payments from state funds under a contract to provide property, materials, or services; or receive a state-funded grant or loan.

By signing the contract, the Contractor, under penalty of perjury under the laws of the State of Texas, certifies that the sole proprietor, partner, shareholder or owner of the firm is not 30 or more days delinquent in providing child support.

By signing the contract, the Contractor makes material representation of fact upon which reliance is placed as the Department enters into the contract. If it is later determined that the Contractor knowingly rendered an erroneous representation, in addition to other remedies available, the Department may terminate the contract for cause or default.

The Contractor shall provide immediate written notice to the Department if at any time it learns that its representation was erroneous when submitted or has become erroneous by reason of changed circumstances.

ARTICLE IV. AWARD AND EXECUTION OF CONTRACT

4.1 Consideration of Bids. For the purpose of an award, after the proposals are opened and read, the amount of the bid will be considered to be the lump sum total of all Bid Items as determined by the State. The bids will then be compared and the results made public.

4.2 Award of Contract. Award of the contract, if it is awarded, will be to the lowest responsive bidder. In accordance with the Government Code, Chapter 2252, Subchapter A. For non-federal-aid contracts, the award will not be made to a nonresident bidder unless the nonresident bidder's bid is lower than the lowest bid submitted by a Texas resident bidder by the same amount that a Texas resident bidder would be required to underbid a nonresident bidder to obtain a comparable contract in the state in which the nonresident's principal place of business is located. The Commission or designated representative will award, reject, or defer the Contract within 30 days after the opening of the proposal. The Department reserves the right to reject any or all proposals in the best interest of the State.

4.3 Rejection of Contract. The Commission or designated representative will reject the Contract if:

1. Collusion may have existed among the bidders. Collusion participants will not be allowed to bid future proposals for the same project.
2. The low bid is mathematically and materially unbalanced. The bidder will not be allowed to bid future proposals for the same project.
3. The lowest bid is higher than the Department's estimate and re-advertising the project for bids may result in a lower bid.
4. The apparent low bid contains a bid error that satisfies the requirements and criteria in 4.11.
5. It is in the best interest of the State.

4.4 Defer. The Commission or designated representative, with the agreement of the apparent low bidder, may defer the award or rejection of the Contract when additional information is required to make a final decision.

4.5 Execution of Contract, Bonds, Certificate of Insurance, Furnishing Ownership Information, DBE/HUB Information and the List of Quoting Suppliers and Subcontractors. Except as provided below, within 15 days after written notification of award of a contract, the successful bidder must execute and furnish to the Department the contract, with:

1. A performance bond and a payment bond, if required, with powers of attorneys attached, each in the full amount of the contract price, executed by a surety company or surety companies authorized to execute surety bonds under and in accordance with the laws of the State of Texas, on forms provided by the State, in accordance with Article III, 3.4, of the foregoing Uniform General Conditions. All contracts and bonds must be in the hands of the Owner prior to the end of the 15 days.

A Payment Bond is required if the Contract Price is in excess of $25,000. A payment bond is payable to the state, in the full amount of the Contract and solely for the protection and use of payment bond beneficiaries who have a direct contractual relationship with the Contractor or a supplier of required materials or labor. The form of bond shall be approved by the Attorney General of Texas.

A Performance Bond is required if the Contract Price is in excess of $100,000. The performance bond is solely for the protection of the state, in the full amount of the Contract and conditioned on the faithful performance of the Work in accordance with the Contract Documents. The form of the bond shall be approved by the Attorney General of Texas.

When the amount of the contract is $25,000 or less, neither a performance bond nor a payment bond will be required.

2. For all contracts, a certificate of insurance showing coverage in accordance with the contract requirements, on forms furnished by the Department.

3. **For all contracts, a list of all suppliers and subcontractors that quoted on the contract. This list shall include names, addresses, telephone numbers and type(s) of work quoted.**

4. On the form provided by the Department, the names and social security numbers of all individuals owning 25 percent or more of the firm, or firms in the case of a joint venture.

4.6 Claims on Payment Bonds. Claims on payment bonds must be sent directly to the Contractor and his surety in accordance with §2253.041, Texas Government Code. All Payment Bond claimants are cautioned that no lien exists on the funds unpaid to the Contractor on such Contract, and that reliance on notices sent to the Owner may result in loss of their rights against the Contractor and/or his surety. The Owner is not responsible in any manner to a claimant for collection of unpaid bills, and accepts no such responsibility because of any representation by any agent or employee.

Nonpayment notifications shall be sent to the Project Manager for this contract and to the bonding company.

4.7 State of Texas HUB Subcontracting Plan (HSP) Development and Good Faith Effort Requirements. The DBE/HUB program for TxDOT is handled through the Construction Division, Business Opportunity Program Section. All requirements of the Historically Underutilized Business (HUB) Subcontracting Plan and Prime Contractor Progress Assessment Reports are requirements under this contract.

4.8 HUB Information. A State of Texas HUB Subcontracting Plan ***must*** be filled out and returned with any bid, offer or proposal to be considered responsive. If your response to this solicitation does not include a State of Texas HUB Subcontracting Plan (HSP), your response shall be rejected as a material failure to comply with advertised specifications and pursuant to Government Code §2161.252(b). All prime vendors (HUB or Non-HUB) are required to comply. Questions should be directed to 512-486-5500.

4.9 Contract Time. Time set forth in the Contract for the completion of the Work is an essential element of the Contract. By executing the Contract, the Contractor acknowledges and confirms that the number of calendar days specified in the Contract is a reasonable period for performing the work defined in the Contract.

4.10 Failure to Execute Contract, Bonds, Certificate of Insurance, Furnish Ownership Information, DBE/HUB Information and the List of Quoting Suppliers and Subcontractors.

Should the bidder to whom the contract is awarded refuse or neglect to execute and file the contract, bonds, Certificate of Insurance, furnish ownership information, any additional requested DBE/HUB information and the list of quoting suppliers and subcontractors within **15 days** after written notification of the award of the contract, the proposal guaranty filed with the bid will become the property of the State, not as a penalty, but as liquidated damages. A bidder who forfeits his proposal guaranty in accordance with this article will not be considered in future proposals for the same work unless there has been a substantial change in design of the project subsequent to the forfeiture of the proposal guaranty. In addition, the Department may impose sanctions against the bidder for failure to enter into the contract or honor the proposal guaranty.

4.11 The Commission will consider a claim of a bid error by the apparent low bidder if the following requirements have been met.

1. The apparent low bidder must submit written notification to the Manager, Contract Letting and Processing Branch in the Construction Division, within five business days after the date proposals are opened for the project.

2. The notification must identify the item(s) of work involved and must include bidding documentation. The Department may request clarification of submitted documentation.

The Commission will evaluate the claim of an error by the apparent low bidder by considering the following:

1. the bid error must relate to a material item of work
2. the bid error amount is a significant portion of the total bid
3. the bid error occurred despite the exercise of ordinary care
4. if the delay of the project will impact safety and cause a significant increase in cost to the public

4.12 Preconstruction Conference. Prior to the issuance of Notice to Proceed, a conference will be held attended by the Owner, Contractor, Architect/Engineer and Subcontractors, as appropriate, to establish a working understanding among the parties as to the Work, schedules, procedures for handling Shop Drawings, and other submittals, processing Applications for Payment, maintaining required records and all other matters of importance to the Project and effective communications on Site.

4.13 Owner's Representative – Project Manager. Prior to the start of construction, Owner shall designate in writing the Owner's Representative – Project Manager, who shall have express authority to act and bind the Owner to the extent and for the purposes described in the various Articles of the Contract, including responsibilities for general administration of the Contract. Unless otherwise specifically provided for, the Project Manager is the single point of contact between the Owner and Contractor. Notice to the Project Manager, unless otherwise noted, constitutes notice to the Owner under the Contract.

4.14 Beginning of Work. The Contractor will not begin work until authorized by the Owner in writing.

4.15 Work Progress Schedule. Within fourteen calendar days after time charges begin, the Contractor will submit in triplicate to the Owner for review, an estimated work progress schedule in relation to the entire project. Failure to provide this schedule will be considered sufficient cause for the Owner to order that work under this contract be stopped without suspension of contract time charges.

ARTICLE V. CONTRACT DRAWINGS AND TECHNICAL SPECIFICATIONS

5.1 Interpretation of Plans, Specifications. Should any items on the drawings or in the specifications require further explanation, or should any questions arise concerning the true meaning of the drawings and specifications, the Contractor is responsible for contacting the Owner for clarification. In no case will work proceed when the Contractor is in doubt concerning the intent of the drawings and specifications. Reference UGC, Article III Contract documents, Paragraph 3.5.

5.2 Verification of Existing Conditions and Dimensions. The Contractor is responsible for verifying all existing field conditions and building element dimensions. When the Contractor determines that existing conditions and/or dimensions differ from contract drawings, it is required to immediately notify the Owner of the discrepancy, in writing, before proceeding with work in this area.

5.3 Copies Furnished. The awarded contractor will be furnished free of charge four (4) complete printed sets of contract drawings and specifications.

ARTICLE VI. WORK REQUIREMENTS

6.1 Contractor's Responsibilities. The Contractor is the person or entity identified as such in the Contract and is referred to throughout the Contract Documents as if singular in number. The Contractor shall supervise and direct the Work using the best skill and attention. The Contractor shall be solely responsible for all construction means, methods, techniques, safety, sequences and procedures, and for coordinating all portions of the Work under the Contract. Contractor shall be responsible to see that the completed Work complies accurately with the Contract Documents.

6.2 Labor. Contractor shall provide competent, suitably qualified personnel to survey, lay out, and construct the Work as required by the Contract Documents. Contractor shall at all times maintain good discipline and order at the Site.

6.3 Changes in Work. Changes in the work under this contract which involve costs or credits, will be executed under a Change Order.

6.4 Change Orders may be issued by the Owner in accordance with Article VI of the foregoing Uniform General Conditions and as altered and expanded herein for changes in the work.

A Change Order is a written agreement, prepared by the Department, and entered into by the Contractor and the Owner after execution of the contract. Only Change Orders signed by a duly authorized representative of the State will be allowed to increase or decrease the original contract amount, increase or decrease the original scope of work or increase the contract time. Authorization to sign a Change Order is reserved exclusively to the State and may not be delegated to a private firm under contract to the State. A Change Order signed by the Contractor indicates its agreement with the modifications described in the Change Order, including the actual cost to accomplish the work and/or any adjustment in the contract time.

The Owner, without invalidating the Contract, may order changes in the work beyond the general scope of the Contract consisting of additions, deletions, or other revisions. All such changes in the scope of work must be authorized by Change Order, and performed under the applicable conditions of the Contract Documents. If such changes cause an increase or decrease in the Contractors costs, or an increase in the time required for performance of the contract, a mutually agreeable adjustment should be made and confirmed in writing by Change Order. Overhead and profit can be included in the costs associated with work performed by Change Order. Any overhead and profit, and other costs must be returned to the Owner in a deductive Change Order. Change Orders must be signed by all parties prior to starting any work covered by the Change Order.

If a surety has assumed the responsibilities of the contract, the Owner may pay the surety for the completion contractor's profit and overhead, but it will not pay the surety any profit or overhead. On a Change Order, the Owner will not pay profit and overhead to more than three tiers.

The Owner may order unilateral change orders to work not included in the contract that it considers necessary for the completion of the project, and pay the Contractor a reasonable sum. Any claim for an additional amount must be made in accordance with Article XII.

It shall be understood that the Owner shall have authority to give instructions during the progress of the work which may result in minor changes in the work, not involving an adjustment of costs and not inconsistent with the intent and purpose of the contract documents, in which cases written Change Orders may or may not be issued.

The value of changes in the work, either additive or deductive, executed under a Change Order, shall be determined in one of the following ways:

(1) By acceptance of a lump sum proposal as defined by the following paragraphs.

a. Contractor shall furnish the Owner an itemized breakdown, in such detail and form as acceptable to the Owner, of all costs and supporting information including but not limited to quantities, material prices, tier subcontracted work performed, labor rates and employer payments, and rental rates. The itemized breakdown detail shall be the same for any subcontractor work. The Contractor shall furnish the Owner the following additional information in the itemized breakdown. Insurance charges, bond charges, profit and overhead or markups used in computing the lump sum proposal. This information shall also be provided for any subcontractor work.

Contractor shall provide complete supporting information for profit and overhead or markups used when so requested by the Owner.

b. Costs shall include: Labor cost, including all classifications through foremen when engaged in the actual and direct performance of the work, and actual employer payments to or on behalf of workers for health and welfare, pension, vacation, insurance, and any similar charges imposed by law or required by applicable collective bargaining agreements; materials, installed permanently in the work or expended in performance thereof; rental cost of construction plant and equipment at the work site; energy, fuel, and supplies consumed in operation of power-drive equipment; insurance; and further revisions of previously finalized shop drawings and/or fabrication drawings.

In lieu of providing information for all employer payments to or on behalf of workers excluding actual gross wages the Contractor proposal may use a percentage factor, acceptable to the Owner, which shall constitute full compensation for all employer payments other than actual gross wages. The Contractor shall provide complete supporting information for calculation of the percentage factor(s) when so requested by the Owner.

c. Costs shall **not** include: (these costs shall be considered a part of overhead and profit or markups) Labor for superintendents, assistant superintendents, office personnel (home and field), timekeepers, and maintenance mechanics at any level of contracting; per diem and travel allowances for any of the aforementioned labor classifications; pieces of equipment, hand tools, or instruments having a new value of $500.00 or less, whether or not consumed by use; safety programs; on site and main offices and operating costs; modifications to record drawings; guarantee period cost allowances; and punch list allowances.

(2) By unit prices named in the contract or subsequently agreed upon.

6.5 Computation of Contract Time for Completion. Computation of Contract Time will begin on the date designated in the Work Order or Authorization to Begin Work letter issued by the Owner.

The Owner will furnish the Contractor a monthly statement on prescribed forms, showing number of calendar days charged during the month, total number of days allowed in contract and the calendar days remaining under the contract. The Contractor will be allowed ten (10) days in which to protest the correctness of the statement, otherwise the statement will stand. If the satisfactory completion of the contract shall require unforeseen work or work and materials in greater amounts or quantities than those set forth in the contract, or if the Owner determines that a temporary suspension of work is in the best interest of the State, then additional calendar days or suspension of time charge will be allowed the Contractor equal to the time which, in the opinion of the Owner, the work as a whole is delayed.

6.6 Claims for Extension of Working Time. If the Contractor experiences unavoidable delay which it feels will affect completion of the project within the specified calendar days, it should file written notice with the Owner in accordance with Article 8.3 of the foregoing Uniform General Conditions. The Owner shall acknowledge such written notice and will grant an extension of time equal to the time, in the opinion of the Owner, such events delay the final completion of the project. This procedure is to protect the Contractor against unavoidable delays but is not to be used as a means to allow a reduction in the normal labor forces required to complete the balance of the project.

6.7 Failure to Complete Work on Time. If the Contractor fails to complete the contract in the calendar days specified, liquidated damages will be charged for each calendar day thereafter. This also applies if the Contractor fails to complete the work in the calendar days specified after a Certificate of Substantial Completion has been issued.

The time set forth in the Proposal for the completion of the work is an essential element of the contract. For each calendar day that any work shall remain uncompleted after the expiration of the calendar days specified in the contract, together with any additional calendar days allowed, the amount per day given in the following schedule will be deducted from the money due or to become due the Contractor, not as a penalty, but as liquidated damages and added expense for engineering and administrative supervision:

FOR AMOUNT OF ORIGINAL CONTRACT (as of 10-05 letting)

From More Than		To and Including	Amount of Daily Contract Administration Liquidated Damages per Working Day
$ 0		$ 100,000.	$450
100,000.		300,000.	450.
300,000.		1,000,000.	600.
1,000,000.		5,000,000.	800.
5,000,000.		10,000,000.	1,200.
10,000,000.		17,500,000.	1,700.
17,500,000.	Over	17,500,000.	2,000.

6.8 Suspension of Work. The Owner may, at any time without prior notice, suspend all or any part of the work if it is considered reasonably necessary to do so to prevent or correct any condition of the work which may reasonably be expected to impair the integrity, usefulness or longevity of the work when completed. The Contractor will be provided a written notice of suspension for cause, setting forth the reason for the suspension and identifying the work to be suspended. The Contractor will not be entitled to an extension of time if it is determined the cause for the suspension is within the control of the Contractor. If the cause for suspension is determined not to have been within control of the Contractor, additional calendar days will be allowed the Contractor equal to the time which, in the opinion of the Owner, the work as a whole is delayed.

6.9 Installation of Special Equipment. The Owner reserves the right to execute or cause same to be done, any work not included in the contract but considered necessary to the completion of the project for the purpose for which it is intended, during the course of construction.

ARTICLE VII. PAYMENTS

7.1 Application for Partial Payments. As set forth in Article VII of the foregoing Uniform General Conditions, the Contractor shall submit an itemized breakdown of the contract price as to the various classifications of the work by crafts, subcontracts, lump sum of materials and labor, subject to the approval of the Owner, which breakdown shall be used as the basis for progress payments of the contract. Forms will be furnished to the Contractor by the Owner for filing its application for partial payments.

The Contractor shall submit to the Owner an application for partial payment utilizing standard forms furnished by the Owner.

Payments to the Contractor will be made for the work properly done and materials properly in place plus the invoice cost for non-perishable materials properly stored at the site but not incorporated in the work. From the total amount so ascertained 5% (percent) will be retained. See Article 7.2.1 of foregoing Uniform General Conditions.

7.2 Payments Upon Substantial Completion. In cases where the lack of delivery of one or more minor items of equipment, fixtures or hardware prevents the final completion and acceptance of the project, and where such lack of delivery is proven not due to negligence on the part of the Contractor, and where the Contractor has performed all previous work in a manner satisfactory to the Owner, the Owner may, in order to relieve the Contractor of undue financial hardship, elect to make payment of the final amount due the Contractor, including retained percentages, but deducting from its final payment an amount as determined by the Owner to be sufficient to insure the proper installation of the lacking items by the Contractor upon their subsequent delivery.
See Article IX of the foregoing Uniform General Conditions for terms under which Owner may occupy the work upon substantial completion.

7.3 Partial Release of Retainage for Contracts with Separate Period for Vegetative Establishment, Maintenance or Performance (VEMP). Before the entire improvement is accepted, the department may release a portion of the amount retained at the time construction of the improvement is completed but will retain an amount sufficient to ensure compliance with the contract. All submissions and final quantities for work not associated with the VEMP work must be completed and accepted. It is the intent of the department to withhold sufficient retainage to ensure completion of the contract until final acceptance. In addition to the above requirements, retainage for contracts with VEMP work will be handled as follows:

a. For landscape projects, the standard full retainage of 5% should apply until completion of all the work and final acceptance.
b. A reduction of retainage to 2% may be appropriate for most other contracts with a VEMP; however, a lesser retainage may be considered as explained in (c.) below.
c. When the 2% retainage is an amount beyond that needed to ensure completion of a contract with a VEMP, the Owner may reduce the amount retained to an amount sufficient to complete the contract in case of default.

Reduction of the retainage does not relieve the contractor from the requirements of the plans and specifications until final written acceptance of the project occurs.

7.4 Payments Upon Termination. If the contract is terminated by the Owner and the Contractor is released before all items of work included in this contract have been completed, payment will be made for the work accomplished prior to termination, provided such work is in conformance with the contract documents and is acceptable to the Owner. No claim for loss of anticipated profits shall be considered, and no further compensation will be due or paid.

Termination of the contract, as stated above, will not relieve the surety or surety companies of any responsibilities under the terms of the contract.

7.5 Prompt Payment: The Contractor shall pay the subcontractor for work performed within 10 days after the Contractor receives payment for the work performed by the subcontractor. Also, any retained monies on a subcontractor's work shall be paid to the subcontractor within 10 days after satisfactory completion of all subcontractor's work. Completion of all subcontractor's work shall include test, maintenance and other similar periods that are the responsibility of the subcontractor.

For the purpose of this Item, satisfactory completion shall have been accomplished when:

1. The subcontractor has fulfilled the contract requirements of both the Department and the subcontract for the subcontracted work, including the submission of all submittals required by the specifications and the Department, and
2. The work done by the subcontractor has been inspected and approved by the Department and the final quantities of the subcontractor's work have been determined and agreed upon.

The inspection and approval of a subcontractors work does not eliminate the Contractor's responsibilities for all the work as defined.

The above requirements are also applicable to all sub-tier subcontractors and the above provisions shall be made a part of all subcontract agreements.

Failure to comply with any of the above requirements may cause the Owner to withhold all estimates which have or may become due and the Owner may suspend the work until his requests are complied with.

Nonpayment notifications shall be sent to the Project Manager for this contract and to the bonding company.

7.6 State Auditor: The State Auditor may conduct an audit or investigation of any entity receiving funds from the State directly under the contract or indirectly through a subcontract under the contract. Acceptance of funds directly under the contract or indirectly through a subcontract under this contract acts as acceptance of the authority of the State Auditor, under the direction of The Legislative Audit Committee, to conduct an audit or investigation in connection with those funds.

ARTICLE VIII. INSURANCE REQUIREMENTS

The Contractor shall secure and maintain insurance coverage for the duration of this contract as required by Article 5.7.1 of the foregoing Uniform General Conditions. Specific coverage as listed under Article 5.7.2 of the Uniform General Conditions are hereby modified for this project to require the following coverage.

This insurance shall be kept in force until the work described in this contract has been completed and accepted by the Department. If for any reason insurance coverage is not kept in force, all work will be stopped until an acceptable Certificate of Insurance is provided the Department.

The State shall be included as an "Additional Insured" by Endorsement to policies issued for coverage listed in 2 and 3, below and a "Waiver of Subrogation Endorsement" in favor of the State shall be a part of each policy for the coverage in 1, 2 and 3 below. The State shall also be named under the Loss Payable clause in 4 below.

The Contractor shall be responsible for any deductions stated in the policy.

1.	Workers' Compensation Insurance	In accordance with Texas Workers' Compensation Act.
2.	Comprehensive General Liability Insurance Amounts - Bodily Injury - Property Damage	 $500,000 each occurrence $100,000 each occurrence $100,000 for aggregate
	OR	
	Commercial General Liability Insurance Amount	 $600,000 combined single limit
3.	Comprehensive Automobile Liability Insurance or Texas Business Auto Policy Amounts - Bodily Injury Property Damage	 $250,000 each person $500,000 each occurrence $100,000 each occurrence
4.	Builder's Risk against loss by storm or fire or extended coverage perils on work and materials intended for use on the project including structures adjacent thereto	100% of Contract Price TxDOT to be named under the Loss Payable Clause

The Contractor shall provide the Department with the Department's Certificate of Insurance, in accordance with contract requirements and with the requirements of Paragraph 8.3, Workers' Compensation Insurance Coverage. Upon signing the contract for this project, all insurance certificates should be sent by **overnight delivery service** for approval to:

Texas Department of Transportation
Construction Division, Attention: Contract Processing Branch
200 East Riverside Drive, #123, Austin, TX 78704

8.1 Responsibility for Damage Claims. The Contractor agrees to indemnify and save harmless the State, its agents, and employees from all suits, action or claims and from all liability and damages for any and all injuries or damages sustained by any person or property in consequence of any neglect in the performance of the contract by the Contractor and from any claims or amounts arising or recovered under the "Workers' Compensation Laws"; Chapter 101, Civil Practice and Remedies Code (the Texas Tort Claims Act), or any other laws. The Contractor shall further so indemnify and be responsible for all damages or injury to property of any character occurring during the prosecution of the work resulting from any act, omission, neglect or misconduct of the Contractor, its employees, and its subcontractors, in the manner or method of executing the work; or from failure to properly execute the work; or from defective work or materials. Contractor shall not be released from these responsibilities until all claims have been settled and suitable evidence to that effect furnished the Commission.

8.2 Laws to be Observed. The Contractor shall make itself familiar with and at all times shall observe and comply with all Federal, State, and local laws, and regulations which in any manner affect the conduct of the work and shall indemnify and save harmless the State and its representatives against any claim arising from the violation of any such law, or regulation, whether by itself or by its employees.

It is specifically agreed between the parties executing this contract that it is not intended by any of the provisions of any part of the contract to create the public or any member thereof a third party beneficiary hereunder, or to authorize anyone not a party to this contract to maintain a suit for personal injuries or property damage pursuant to the terms or provisions of this contract. The duties, obligations and responsibilities of the parties to this contract with respect to third parties shall remain as imposed by law.

8.3 Workers' Compensation Insurance Coverage. The Contractor certifies by signing this contract that, for the work covered by this contract, he and all subcontractors will comply with all applicable laws, rules and regulations pertaining to workers' compensation insurance or legitimate alternates thereto.

REQUIRED WORKERS' COMPENSATION COVERAGE

"The law requires that each person working on this site or providing services related to the construction project must be covered by workers' compensation insurance. This includes persons providing, hauling, or delivering equipment or materials, or providing labor or transportation or other service related to the project, regardless of the identity of their employer or status as an employee." Reporting Requirements for Building or Construction Projects for Governmental Entities and Complete rules and Information can be obtained from the Texas Secretary of State, www.sos.state.tx.us. Texas Administrative Code, Title 28, Part 2, Chapter 110, Subchapter B, Rule §110.110. The Texas Department of Insurance (TDI) can be reached by writing TDI, 333 Guadalupe, Austin, TX 78701 (P.O. Box 149104, Austin, TX 78714) or by phone at 512-463-6169 or 800-578-4677. Customer helpline 800-252-3439.
Texas Department of Insurance web site: www.tdi.state.tx.us/wc.

A. Definitions:

Certificate of coverage ("certificate") - A copy of a certificate of insurance, a certificate of authority to self-insure issued by the Department of Insurance, showing statutory workers' compensation insurance coverage for the person's or entity's employees providing services on a project, for the duration of the project.

Duration of the project - includes the time from the beginning of the work on the project until the contractor's/person's work on the project has been completed and accepted by the Owner.

Persons providing services on the project ("subcontractor" in Labor Codes §406.096) - includes all persons or entities performing all or part of the services the contractor has undertaken to perform on the project, regardless of whether that person contracted directly with the contractor and regardless of whether that person has employees. This includes, without limitation, independent contractors, subcontractors, leasing companies, motor carriers, owner-operators, employees of any such entity, or employees of any entity which furnishes persons to provide services on the project. "Services" include, without limitation, providing, hauling, or delivering equipment or materials, or providing labor, transportation, or other service related to a project. "Services" does not include activities unrelated to the project, such as food/beverage vendors, office supply deliveries, and delivery of portable toilets.

B. The contractor shall provide coverage, based on proper reporting of classification codes and payroll amounts and filing of any coverage agreements, which meets the statutory requirements of Texas Labor Code, Section 401.011(44) for all employees of the contractor providing services on the project, for the duration of the project.

C. The contractor must provide a certificate of coverage to the Owner prior to being awarded the contract.

D. If the coverage period shown on the contractor's current certificate of coverage ends during the duration of the project, the contractor must, prior to the end of the coverage period, file a new certificate of coverage with the Owner showing that coverage has been extended.

E. The contractor shall obtain from each person providing services on a project, and provide to the Owner:

(1) A certificate of coverage, prior to that person beginning work on the project, so the Owner will have on file certificates of coverage showing coverage for all persons providing services on the project; and

(2) No later than seven days after receipt by the contractor, a new certificate of coverage showing extension of coverage, if the coverage period shown on the current certificate of coverage ends during the duration of the project.

F. The contractor shall retain all required certificates of coverage for the duration of the project and for one year thereafter.

G. The contractor shall notify the Owner in writing by certified mail or personal delivery, within 10 days after the contractor knew or should have know, of any change that materially affects the provision of coverage of any person providing services on the project.

H. The contractor shall post on each project site a notice, in the text, form and manner prescribed by the Texas Workers' Compensation Commission, informing all persons providing services to the project that they are required to be covered, and stating how a person may verify coverage and report lack of coverage.

I. The contractor shall contractually require each person with whom it contracts to provide services on a project to:

(1) provide coverage, based on proper reporting of classification codes and payroll amounts and filing of any coverage agreements, which meets the statutory requirements of Texas Labor Code, Section 401.011(44) for all of its employees providing services on the project, for the duration of the project;

(2) provide to the contractor, prior to that person beginning work on the project, a certificate of coverage showing that coverage is being provided for all employees of the person providing services on the project, for the duration of the project;

(3) provide the contractor, prior to the end of the coverage period, a new certificate of coverage showing extension of coverage, if the coverage period shown on the current certificate of coverage ends during the duration of the project;

(4) obtain from each other person with whom it contracts, and provide to the contractor:

(a) A certificate of coverage, prior to the other person beginning work on the project; and

(b) a new certificate of coverage showing extension of coverage, prior to the end of the coverage period, if the coverage period shown on the current certificate of coverage ends during the duration of the project;

(5) retain all required certificates of coverage on file for the duration of the project and for one year thereafter;

(6) notify the Owner in writing by certified mail or personal delivery, within 10 days after the person knew or should have known, of any change that materially affects the provision of coverage of any person providing services on the project; and

(7) contractually require each person with whom it contracts, to perform as required by paragraphs (1) - (6), with the certificates of coverage to be provided to the person for whom they are providing services.

J. By signing this contract or providing or causing to be provided a certificate of coverage, the contractor is representing to the Owner that all employees of the contractor who will provide services on the project will be covered by workers' compensation coverage for the duration of the project, that the coverage will be based on proper reporting of classification codes and payroll amounts, and that all coverage agreements will be filed with the appropriate insurance carrier or, in the case of a self-insured, with the Department of Insurance Division of Self-Insurance Regulation. Providing false or misleading information may subject the contractor to administrative penalties, criminal penalties, civil penalties, or other civil actions.

K. The contractor's failure to comply with any of these provisions is a breach of contract by the contractor which entitles the Owner to declare the contract void if the contractor does not remedy the breach within ten days after receipt of notice of breach from the Owner.

L. The contractor shall post a notice on each project site informing all persons providing services on the project that they are required to be covered, and stating how a person may verify current coverage and report failure to provide coverage. This notice does not satisfy other posing requirements imposed by the Act or other commission rules. This notice must be printed with a title in at least 30 point bold type and text in at least 19 point normal type,

and shall be in both English and Spanish and any other language common to the worker population.

M. By signing this proposal the bidder certifies that, if awarded the contract for the work covered by this proposal, it and all subcontractors and suppliers will comply with all applicable laws, rules, and regulations pertaining to worker's compensation insurance or legitimate alternates thereto.

ARTICLE IX. SUBCONTRACTORS

The Contractor shall, notify the Owner in writing of any changes or substitutions to the submitted **List of Quoting Suppliers and Subcontractors**. (see Article IV, Paragraph 4.5 above) for the principal parts of the work and for such others as the Owner may request. Prime contractors shall notify the Owner and obtain prior approval before any changes can be made to its HUB Subcontracting Plan.

The Contractor is fully responsible to the Owner for the acts and omissions of its subcontractors and of persons either directly or indirectly employed by them, as it is for the acts and omissions of persons directly employed by him. Nothing contained in the contract documents shall create any contractual relation between any subcontractor and the Owner.

ARTICLE X. LABOR REQUIREMENTS - Refer to Special Provision 000-007, Special Labor Provisions for State Projects (Non-Federal-aid construction projects) or to requirements for Federal-aid Construction-Enhancement projects.

10.1 Minimum Wages. By signing this proposal, the Bidder hereby agrees to pay all employees no less than the Federal Minimum Wage and comply with the provisions as set forth in Article II, 2.2, of the foregoing Uniform General Conditions. The minimum wage rate has been established as indicated herein for the regular rate of per diem wages for an eight (8) hour working day prevailing in this locality for each craft or type of "laborer," "workman," or "mechanic" considered necessary to execute the contract, which wage rates shall, apply as minimum wage rates on this contract. The Department shall adopt prevailing wage rates as prescribed by Government Code Title 10, Chapter 2258, "Prevailing Wage Rates". See Schedule of Prevailing Wage Rates inserted for this project, from Davis-Bacon Wage Determinations issued by the U. S. Department of Labor. (www.gpo.gov/davisbacon)

10.2 Record and Inspection. The Contractor and all subcontractors shall keep, or cause to be kept, weekly payrolls showing the name, occupation, number of hours worked each day and per diem wage paid each "laborer," "workman" and "mechanic" together with a complete record of all deductions made from such wages. During the construction period, the Contractor shall keep a copy of each weekly payroll available in the immediate vicinity of the project site and shall allow inspection of such payrolls at all reasonable hours by any authorized representative of the Owner. The Department shall withhold payments to contractors until their contractual obligations for paying employees and the contract labor have been fulfilled.

ARTICLE XI. TAX EXEMPTIONS

11.1 Federal Transportation Tax. The State is not liable for the Federal tax imposed by Section 3475 of the Internal Revenue Code on transportation charges on materials purchased by the State. The Contractor is specifically authorized to consign the construction materials to be incorporated in this contract to the Texas Department of Transportation since the materials are deemed to have been purchased by the State of Texas.

By virtue of the State granting this authority, the Internal Revenue Department has ruled that the tax will not be collected provided the materials purchased by the Contractor are consigned to the State.

This provision is not intended and shall not be construed as relieving the Contractor of any and all costs in connection with the furnishing of such materials to the project, including all transportation costs and incurred demurrage.

11.2 State Sales Tax. The Owner qualifies for exemption from State and Local Sales and Use Taxes pursuant to he provisions of Chapter 151, Texas Tax Code. The Contractor may claim exemption of the applicable State taxes by complying with such procedures as may be prescribed by the Texas Comptroller of Public Accounts. For information call **1-800-252-5555**, or 512-463-4600, Tax Assistance Section. Tax forms may be obtained at www.window.state.tx.us, for the Texas Sales and Use Tax Exemption Certificate. (Number 01-339)

ARTICLE XII. DISPUTED MATTERS RESOLUTION / CLAIMS

In the event of any dispute arising out of or relating to this contract, the parties agree to attempt to resolve such dispute amicably by promptly entering into negotiations in good faith. To every extent possible, disputes between the Contractor and Owner's representative in charge of the project should be resolved during the course of the contract.

The Owner's duly authorized representative in charge of this project shall have sole authority and responsibility for decision during the term of the contract to the extent provided for in the Contract Documents unless otherwise modified by written instrument which will be shown to the Contractor.

Notification of dispute for additional costs or time arising prior to the termination of the contract should be filed with the Owner's representative in accordance with Article 6.3 and 6.4 respectively of the foregoing Uniform General Conditions.

After the completion of the contract, if the Owner and Contractor cannot resolve a dispute and the Contractor has not been satisfied, the Contractor may file a formal claim. Formal claims will not be addressed until the project is complete.

To initiate the formal claims procedure the Contractor must file a detailed report with the Owner's representative, the Director of the Maintenance Division, and the Contract Claim Committee of the Texas Department of Transportation at the State Headquarters in Austin via the Contract Claim Committee secretary at 125 E. 11th Street, Austin, Texas 78701. The Contractor can find the formal claims process in the Texas Administrative Code, Title 43, Part 1, Chapter 9, Subchapter A, Rule 9.2., Contract Claim Procedure.

The final claim report should include a detailed explanation of the issue(s), the basis for the request(s) being made for each issue, and a detailed breakdown and description of any additional costs and/or time being requested for each issue.

ARTICLE XIII. MISCELLANEOUS REQUIREMENTS

13.1 All extra work shall be done in accordance with Article 6.1 of these Supplementary General Conditions, "Work Requirements."

13.2 Use of Premises. The Contractor shall confine its apparatus, storage of material and operations of its workers to limits indicated by law, permits or directions of the Owner and shall not unreasonably encumber the premises with its materials.

The Contractor shall not load or permit any part of the structure to be loaded with weight that will endanger its safety.

The Contractor shall enforce the Owner's instructions regarding signs, advertisements, fires and smoking.

13.3 Federal, State and Municipal Requirements. It shall be the responsibility of each bidder to verify the conformance of these plans and specifications to the applicable requirements of the local utility companies, before submitting a bid for this project.

After the contract is let, any changes in the specified work and materials made necessary by the utility company requirements shall be made at the Contractor's expense.

Each Contractor whose work requires connection to a utility service including, but not limited to, water, gas, electricity and sanitary sewer shall obtain and bear all costs of inspections, plan approvals, permits, taps, pavement cuts and any other fees or assessments established by the appropriate utility provider.

The State Attorney General has ruled that State building projects are exempt from local building codes and permit requirements. Therefore, the contractor will not be required to obtain or pay for any local building permits for work performed within the boundaries of State property. Contractor shall obtain and bear all costs associated with requirements, including but not limited to permits, inspections, plan approvals and any other fees and assessments of any local authority having jurisdiction for any element of the work outside the limits of State property.

The Contractor shall obtain and bear all costs of any fees and assessments, including but not limited to, permits, inspections, plan approvals established by any federal or state agency having jurisdiction over any element of the work.

Before commencing any trench excavation which will exceed a depth of five feet, the Contractor shall develop a plan that will be in full compliance with the Occupational Safety and Health Act of 1970 (OSHA) and all amendments thereto.

13.4 State Antiquities Law. The Antiquities Code of Texas of 1970 states that historical sites and Archaeological Landmarks on land belonging to the State may not be altered, destroyed or excavated without a permit from the Texas Antiquities Committee.

For all project specific locations (PSL's) (material sources, waste sites, parking areas, storage areas, field offices, staging areas, haul roads, etc.), the bidder certifies by signing this proposal, that if awarded the contract for the work covered by this proposal, the bidder and all subcontractors and suppliers will comply with all applicable laws and regulations pertaining to the preservation of cultural resources, natural resources, and the environment as issued by the following agencies.

U.S. Department of Transportation
U.S. Army Corps of Engineers
U.S. Fish and Wildlife Service
Environmental Protection Agency
Texas Department of Transportation
Texas Historical Commission
Texas Parks and Wildlife Department
Texas Commission on Environmental Quality

If, during the course of this contract, sites of historical, archaeological, educational or scientific interest are discovered, operations in that particular area shall cease immediately and the site shall be investigated and evaluated by the Owner. An extension of the contract time will be granted, if necessary, for delays caused by these investigations and evaluations. It is specifically understood, however, that if the Contractor is delayed by virtue of an investigation and evaluation that this delay will not be considered as a basis for claim by the Contractor, other than claims for extension of contract time.

13.5 Freezing Weather. No concrete work, masonry work, plastering or exterior painting shall be done when outside temperature is 40°F or is approaching 40°F and falling.

13.6 Explosives. The use of explosives will not be permitted in any performance of the work unless specifically described in the Technical Specifications as to materials and methods.

13.7 Control of Work. The work will be observed, tested and inspected by the Owner's Representative, and performed to his/her satisfaction, in accordance with the contract, plans and specifications. The Owner's Representative will decide all questions which may arise as to the quality or acceptability of materials furnished and work performed; the manner of performance and rate of progress of the work; the interpretations of the plans and specifications; and the acceptable fulfillment of the contract on the part of the Contractor. His/her decisions will be final, and will have executive authority to enforce and make effective such decisions and orders if the contractor fails to carry out promptly.

13.8 Sources of Supply and Quality of Materials

The source of supply of each of the materials shall be approved by the Owner before delivery is started and at the option of the Owner, may be sampled and tested for determining compliance with the governing specifications by the Owner before delivery is started. If it is found after trial that sources of supply previously approved do not produce uniform and satisfactory products, or if the product from any source proves unacceptable at any time, the Contractor shall furnish materials from other approved sources. Only materials conforming to the requirements of these specifications and approved by the Owner shall be used in the work. All materials being used are subject to inspection or testing at any time during preparation or use. Any material which has been tested and accepted at the source of supply may be subjected to a check test after delivery and all materials which, when retested, do not meet the requirements of the specifications, will be rejected.

No material which, after approval, has in any way become unfit for use shall be used in the work. If, for any reason, the Contractor selects a material which is approved for use by the Owner by sampling and testing or other means, and then decides to change to a different material requiring additional sampling and testing for approval, the expense for such sampling and testing may be deducted from any monies due or to become due to the Contractor.

If the normal trade practice for manufacturers is to furnish warranties or guarantees for the materials and equipment specified herein, the Contractor shall turn the guarantees and warranties over to the Owner for potential dealing with the manufacturers. The extent of such warranties or guarantees will not be a factor in selecting the successful bidder.

All manufacturing processes for steel or iron materials or for applying a coating to steel or iron materials (coating includes epoxy coating, galvanizing, painting and any other coating that protects or enhances the value of the steel or iron material) incorporated into the finished project must occur in the United States except:

1. The requirements do not prevent a minimal use of foreign materials, if the cost of such materials used does not exceed one-tenth of one percent (0.1 percent) of the total contract cost or $2,500.00, whichever is greater.

2. When shown on the plans, steel or iron products or application of a coating to steel or iron materials (coating includes epoxy coating, galvanizing, painting and any other coating that protects or enhances the value of the steel or iron material) will have alternate bid items for foreign materials.

All manufacturing processes are defined as all processes required to change the raw ore or scrap metal into the finished, in-place steel product. The Contractor shall furnish, to the Owner, certified mill test reports on the base metal and producer's certifications on all subsequent manufacturing processes stating compliance with the applicable specification(s) and that all manufacturing processes occurred in the United States. Producer's certifications shall bear the notarized signature of a responsible authorized representative of the producer.

13.9 Texas Identification Number. The successful low bidder will be required to secure from the Texas Comptroller of Public Accounts, a Texas Payee Identification Number (PIN). This PIN number must correspond to the person(s) or entity shown on this Contract. A valid PIN number is required prior to payment being processed for this Contract. This PIN number may be obtained by contacting the Texas Comptroller of Public Accounts, www.window.state.tx.us, Texas Finances, Fiscal Management, Payment Services, Forms, Application #AP-152 or by calling (512) 463-3660 or 1-800-531-5441, toll free from anywhere in Texas.

A Texas Payee Identification Number is required from every individual, business or organization that intends to bill State Agencies for goods and/or services provided.

13.10 By signing this proposal, the Bidder, under penalty of perjury under the laws of the State of Texas, certifies that the proprietor, partner, majority shareholder or substantial owner is aware of House Bill 2310 passed in the 73rd Legislative Regular Session and is in total compliance regarding fraudulent Disadvantaged Business Enterprises (DBE) activity on this contract.

13.11 Responsibility for Damage Claims. The Contractor may not assert any claim or bring any type of legal action (including Original Action, Third Party Action, or Cross Claim) against any Commissioner, or individual employee of the Texas Department of Transportation for any cause of action or claim for alleged negligence arising out of the project or contract. In the event any such claim is asserted or any such legal action is brought by the Contractor, the Contractor will be ineligible to bid on any contract with the Texas Department of Transportation during the pendency of such claim or legal action.

This supplement makes a contractor ineligible to bid on a contract when a claim or legal action is brought against a commissioner or individual employee of TxDOT for any cause of action or claim for alleged negligence arising out of a project or contract.

Individual owners of a contracting firm are treated the same as a contractor in the special attachment. Therefore, the requirement is met when owners of a contracting firm bring a claim or legal action against a TxDOT employee.

The Construction Division (CST) will maintain a list of contractors who have brought claims or legal actions against TxDOT employees in relation to contracts where the provision is included.

13.12 Deficiencies in the Work. The Owner reserves the right to withhold from funds remaining unpaid under the Contract amounts required to pay the costs of, but not limited to, the following.

(1) Special site visits required to re-examine a cited deficiency which has not been corrected after a total of two visits.

(2) Special monitoring to ensure compliance with the contract documents due to non-performance or poor workmanship.

(3) Assessments of potential damage, resulting from failure of the Contractor to protect the Work.

13.13 Workers. All workers employed by the Contractor and subcontractor shall have such skill and experience as will enable them to properly perform the duties assigned.

Any person employed by the Contractor or a subcontractor who, in the opinion of the Owner, does not perform his work in a proper and skillful manner, displays chronic uncooperative behavior, makes threats of or participates in actual physical aggression or endangerment, or who is disrespectful, intemperate, disorderly or otherwise objectionable, shall at the written request of the Owner be forthwith discharged and shall not be employed again on any portion of the Work without the written consent of the Owner.

13.14 Interruption of Business. The Contractor is responsible for any monetary damages due to any major interruption of business including, but not limited to, disruption of utilities or mechanical equipment resulting from the actions or lack of action on the part of all workers employed by the Contractor and subcontractors.

13.15 Contractor Cost Reduction Proposal. The Contractor may submit a cost reduction proposal for changing the requirements of the Contract. The proposal shall demonstrate that changing the Contract requirements would:

1. Represent an advantage to the Owner over the specified requirement;
2. Result in a net reduction in the total Contract Sum;
3. Not impact any essential function or characteristic of the Work such as safety, service life, reliability, economy of operation, esthetic, ease of maintenance, and necessary standardize features; and
4. Not detrimentally affect the Contract completion date.

All cost for compliance with this requirement, whether accepted or not, shall be borne by the Contractor.

The determination of the Owner as to acceptability of the proposal will be final and the Owner may accept in whole or in part any proposal submitted pursuant to this provision by issuing a Change Order that will identify the proposal on which it is based. The Change order will provide for an equitable adjustment in the Contract Sum and will revise any other affected provisions of the Contract Documents.

13.16 Temporary Erosion, Sedimentation and Water Pollution Prevention and Control. Refer to Special Specification Item 506 included in proposal.

END OF SUPPLEMENTARY GENERAL CONDITIONS

ATTACHMENT L
Wage Rates (Building & Highway) Starr County

ATTACHMENT L
WAGE RATES (BUILDINGS AND HIGHWAYS, BELL COUNTY

GENERAL DECISION: **TX20030051** 05/06/2005 TX51

Date: May 6, 2005
General Decision Number: **TX20030051** 05/06/2005

Superseded General Decision Number: TX020051

State: Texas

Construction Types: Building

Counties: Bell and Coryell Counties in Texas.

BUILDING CONSTRUCTION PROJECTS (does not include residential construction consisting of single family homes and apartments up to and including 4 stories).

Modification Number	Publication Date
0	06/13/2003
1	05/28/2004
2	10/08/2004
3	05/06/2005

* ELEC0072-001 08/28/2004

	Rates	Fringes
Cable splicer	$ 21.80	6.03+5%
Electrician	$ 26.00	6.03+5%

IRON0482-002 06/01/2002

	Rates	Fringes
Ironworker, Structural	$ 16.65	4.65

SUTX1991-002 11/16/1991

	Rates	Fringes
Air Conditioning & Heating Mechanic (Excluding Duct Work)	$ 9.10	
Asphalt Heater Operator INCIDENTAL PAVING AND UTILITIES	$ 7.55	
Asphalt Raker INCIDENTAL PAVING AND UTILITIES	$ 6.50	
Bricklayer	$ 14.00	
Carpenter (Including Drywall Hangers)	$ 11.58	
Carpenter INCIDENTAL PAVING AND UTILITIES	$ 8.75	

Cement Mason.....$ 10.50
Concrete Finisher-Paving
INCIDENTAL PAVING AND
UTILITIES.....$ 8.50
Concrete Finisher-Structures
INCIDENTAL PAVING AND
UTILITIES.....$ 8.35
Electrician
INCIDENTAL PAVING AND
UTILITIES.....$ 14.00
Form Builder-Structures
INCIDENTAL PAVING AND
UTILITIES.....$ 8.90
Form Liner - Paving & Curb
INCIDENTAL PAVING AND
UTILITIES.....$ 8.05
Form Setter-Paving & Curb
INCIDENTAL PAVING AND
UTILITIES.....$ 7.10
Form Setter-Structures
INCIDENTAL PAVING AND
UTILITIES.....$ 7.70
Glazier.....$ 7.00 .46
Insulation Installer (Batt
and Blown).....$ 8.31 .54
Ironworker, Reinforcing.....$ 11.00
Laborer (Including Mason
Tenders).....$ 5.61
Laborer, common
INCIDENTAL PAVING AND
UTILITIES.....$ 5.60
Laborer-Utility
INCIDENTAL PAVING AND
UTILITIES.....$ 6.45
Lather.....$ 15.33
Mechanic
INCIDENTAL PAVING AND
UTILITIES.....$ 10.00
Painter.....$ 8.32 .13
Pipelayer
INCIDENTAL PAVING AND
UTILITIES.....$ 5.70
Plasterer.....$ 12.78
Plumbers and Pipefitters
(Excluding HVAC Work).....$ 10.07
Power equipment operators:
Backhoes.....$ 8.54
INCIDENTAL PAVING AND
UTILITIES
Asphalt Distributor.....$ 7.00
Asphalt Paving Machine.....$ 7.15
Broom or Sweeper Operator..$ 6.60
Bulldozer over 150 HP.....$ 7.35
Bulldozer, 150 HP & Less...$ 7.10
Concrete Paving Finishing
Machine.....$ 7.00
Crane, Clamshell,
Backhoe, Derrick,

Dragline, Shovel 1 1/2
C.Y. & Over.....$ 9.45
Crane, Clamshell,
Backhoe, Derrick,
Dragline, Shovel Less than
1 1/2 C.Y.....$ 8.00
Foundation Drill
Operator, Truck Mounted....$ 10.50
Front End Loader 2 1/2
C.Y. & Less.....$ 7.10
Front End Loader Over 2
1/2 C.Y.....$ 7.85
Motor Grader Operator,
Fine Grade.....$ 9.05
Motor Grader Operator.....$ 8.35
Roller, Pneumatic, Self
Propelled.....$ 5.90
Roller, Steel Wheel Other
Flatwheel or Tamping.....$ 5.95
Roller, Steel Wheel,
Plant-Mix Pavement.....$ 6.20
Scraper, 17 C.Y. & Less....$ 6.15
Scraper, Over 17 C.Y.....$ 7.10
Side Boom.....$ 6.30
Tractor, (Pneumatic) 80
HP & Less.....$ 6.00
Tractor, (Pneumatic) over
80 HP.....$ 7.20
Roofer (including Built Up,
Composition and Single Ply)....$ 7.78
Servicer
INCIDENTAL PAVING AND
UTILITIES.....$ 6.60
Sheet metal worker (Including
HVAC Work).....$ 9.79
Soft Floor Layer.....$ 13.46 .26
Tile Setter.....$ 15.00 .25
Truck drivers:
INCIDENTAL PAVING AND
UTILITIES
Single Axle, Heavy.....$ 6.60
Single Axle, Light.....$ 6.45
Tandem Axle or Semi-trailer$ 6.55
Welder
INCIDENTAL PAVING AND
UTILITIES.....$ 9.50

WELDERS - Receive rate prescribed for craft performing operation to which welding is incidental.

WELDERS - Receive rate prescribed for craft performing operation to which welding is incidental.

==========

Unlisted classifications needed for work not included within the scope of the classifications listed may be added after award only as provided in the labor standards contract clauses (29CFR 5.5 (a) (1) (ii)).

In the listing above, the "SU" designation means that rates listed under the identifier do not reflect collectively bargained wage and fringe benefit rates. Other designations indicate unions whose rates have been determined to be prevailing.

WAGE DETERMINATION APPEALS PROCESS

1.) Has there been an initial decision in the matter? This can be:

* an existing published wage determination
* a survey underlying a wage determination
* a Wage and Hour Division letter setting forth a position on a wage determination matter
* a conformance (additional classification and rate) ruling

On survey related matters, initial contact, including requests for summaries of surveys, should be with the Wage and Hour Regional Office for the area in which the survey was conducted because those Regional Offices have responsibility for the Davis-Bacon survey program. If the response from this initial contact is not satisfactory, then the process described in 2.) and 3.) should be followed.

With regard to any other matter not yet ripe for the formal process described here, initial contact should be with the Branch of Construction Wage Determinations. Write to:

Branch of Construction Wage Determinations
Wage and Hour Division
U.S. Department of Labor
200 Constitution Avenue, N.W.
Washington, DC 20210

2.) If the answer to the question in 1.) is yes, then an interested party (those affected by the action) can request review and reconsideration from the Wage and Hour Administrator (See 29 CFR Part 1.8 and 29 CFR Part 7). Write to:

Wage and Hour Administrator
U.S. Department of Labor
200 Constitution Avenue, N.W.
Washington, DC 20210

The request should be accompanied by a full statement of the interested party's position and by any information (wage payment data, project description, area practice material, etc.) that the requestor considers relevant to the issue.

3.) If the decision of the Administrator is not favorable, an interested party may appeal directly to the Administrative Review Board (formerly the Wage Appeals Board). Write to:

Administrative Review Board
U.S. Department of Labor
200 Constitution Avenue, N.W.
Washington, DC 20210

4.) All decisions by the Administrative Review Board are final.

==========

END OF GENERAL DECISION

GENERAL DECISION: **TX20030043** 02/25/2005 TX43

Date: February 25, 2005
General Decision Number: **TX20030043** 02/25/2005

Superseded General Decision Number: TX020043

State: Texas

Construction Types: Heavy and Highway

Counties: Bell, Bexar, Brazos, Comal, Coryell, Guadalupe, Hays, McLennan, Travis and Williamson Counties in Texas.

Heavy (excluding tunnels and dams) and Highway Construction Projects (does not include building structures in rest area projects). *NOT TO BE USED FOR WORK ON SEWAGE OR WATER TREATMENT PLANTS OR LIFT/PUMP STATIONS IN BELL, CORYELL, McLENNAN AND WILLIAMSON COUNTIES.

Modification Number	Publication Date
0	06/13/2003
1	01/14/2005
2	02/18/2005
3	02/25/2005

SUTX2005-001 01/03/2005

	Rates	Fringes
Air Tool Operator	$ 16.00	0.00
Asphalt Distributor Operator	$ 12.09	0.00
Asphalt paving machine operator	$ 11.82	0.00
Asphalt Raker	$ 9.96	0.00
Asphalt Shoveler	$ 10.56	0.00
Broom or Sweeper Operator	$ 9.74	0.00
Bulldozer operator	$ 11.04	0.00
Carpenter	$ 12.25	0.00
Concrete Finisher, Paving	$ 10.53	0.00
Concrete Finisher, Structures	$ 10.95	0.00
Concrete Paving Curbing Machine Operator	$ 14.00	0.00
Concrete Paving Finishing Machine Operator	$ 12.00	0.00
Concrete Rubber	$ 10.88	0.00
Crane, Clamshell, Backhoe, Derrick, Dragline, Shovel Operator	$ 13.66	0.00
Electrician	$ 24.11	0.00
Flagger	$ 9.49	0.00
Form Builder/Setter, Structures	$ 10.88	0.00
Form Setter, Paving & Curb	$ 9.89	0.00
Foundation Drill Operator, Truck Mounted	$ 15.00	0.00
Front End Loader Operator	$ 11.36	0.00
Laborer, common	$ 9.34	0.00
Laborer, Utility	$ 10.12	0.00
Mechanic	$ 14.74	0.00
Mixer operator, Concrete Paving	$ 15.25	0.00

Mixer operator	$ 10.83	0.00
Motor Grader Operator, Fine Grade	$ 15.26	0.00
Motor Grader Operator, Rough	$ 12.96	0.00
Oiler	$ 14.71	0.00
Painter, Structures	$ 11.00	0.00
Pavement Marking Machine Operator	$ 11.52	0.00
Pipelayer	$ 10.49	0.00
Planer Operator	$ 17.45	0.00
Reinforcing Steel Setter, Paving	$ 15.50	0.00
Reinforcing Steel Setter, Structure	$ 14.00	0.00
Roller Operator, Pneumatic, Self-Propelled	$ 9.34	0.00
Roller Operator, Steel Wheel, Flat Wheel/Tamping	$ 9.60	0.00
Roller Operator, Steel Wheel, Plant Mix Pavement	$ 10.24	0.00
Scraper Operator	$ 9.93	0.00
Servicer	$ 11.41	0.00
Sign Installer (PGM)	$ 14.85	0.00
Slip Form Machine Operator	$ 15.17	0.00
Spreader Box operator	$ 10.39	0.00
Structural Steel Worker	$ 13.41	0.00
Tractor operator, Crawler Type	$ 11.10	0.00
Traveling Mixer Operator	$ 10.04	0.00
Trenching machine operator, Heavy	$ 14.22	0.00
Truck Driver Tandem Axle Semi-Trailer	$ 10.95	0.00
Truck driver, lowboy-Float	$ 15.30	0.00
Truck driver, Single Axle, Heavy	$ 11.88	0.00
Truck driver, Single Axle, Light	$ 9.98	0.00
Wagon Drill, Boring Machine, Post Hole Driller Operator	$ 14.65	0.00
Welder	$ 14.26	0.00
Work Zone Barricade Servicer	$ 11.15	0.00

Unlisted classifications needed for work not included within the scope of the classifications listed may be added after award only as provided in the labor standards contract clauses (29CFR 5.5 (a) (1) (ii)).

In the listing above, the "SU" designation means that rates listed under the identifier do not reflect collectively bargained wage and fringe benefit rates. Other designations indicate unions whose rates have been determined to be prevailing.

WAGE DETERMINATION APPEALS PROCESS

1.) Has there been an initial decision in the matter? This can be:

* an existing published wage determination

* a survey underlying a wage determination
* a Wage and Hour Division letter setting forth a position on a wage determination matter
* a conformance (additional classification and rate) ruling

On survey related matters, initial contact, including requests for summaries of surveys, should be with the Wage and Hour Regional Office for the area in which the survey was conducted because those Regional Offices have responsibility for the Davis-Bacon survey program. If the response from this initial contact is not satisfactory, then the process described in 2.)and 3.) should be followed.

With regard to any other matter not yet ripe for the formal process described here, initial contact should be with the Branch of Construction Wage Determinations. Write to:

Branch of Construction Wage Determinations
Wage and Hour Division
U.S. Department of Labor
200 Constitution Avenue, N.W.
Washington, DC 20210

2.) If the answer to the question in 1.) is yes, then an interested party (those affected by the action) can request review and reconsideration from the Wage and Hour Administrator (See 29 CFR Part 1.8 and 29 CFR Part 7). Write to:

Wage and Hour Administrator
U.S. Department of Labor
200 Constitution Avenue, N.W.
Washington, DC 20210

The request should be accompanied by a full statement of the interested party's position and by any information (wage payment data, project description, area practice material, etc.) that the requestor considers relevant to the issue.

3.) If the decision of the Administrator is not favorable, an interested party may appeal directly to the Administrative Review Board (formerly the Wage Appeals Board). Write to:

Administrative Review Board
U.S. Department of Labor
200 Constitution Avenue, N.W.
Washington, DC 20210

4.) All decisions by the Administrative Review Board are final.

==========

END OF GENERAL DECISION

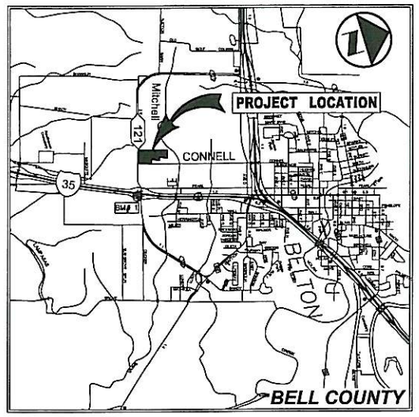

VICINITY MAP
(NOT TO SCALE)

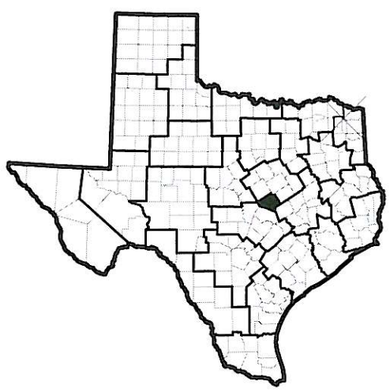

BELL COUNTY, TEXAS

BELTON AREA
ENGINEER AND MAINTENANCE FACILITY

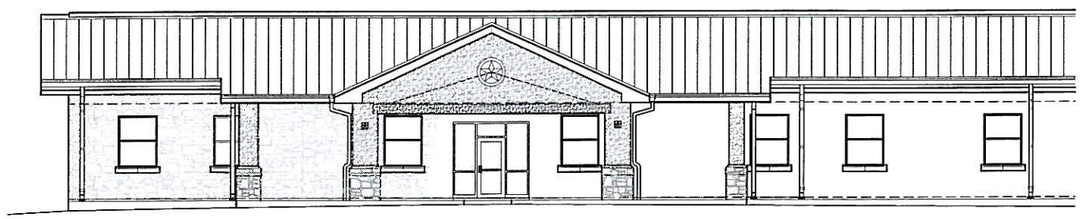

BUILDING SUMMARY:

BUILDING 1	7,708 SQ. FT. @ OFFICE BUILDING
BUILDING 2	9,904 SQ. FT. @ LABORATORY / SHOP AND STORAGE BUILDING
BUILDING 3	4,000 SQ. FT. @ VEHICLE & EQUIPMENT STORAGE BUILDING

PARKING SUMMARY:

45 - 11' x 20' SPACES
2 - VAN ACCESSIBLE SPACES

47 - TOTAL SPACES PROVIDED

BUILDING CODES:

International Building Code - 2003
National Electric Code - 2005
Uniform Plumbing Code - 2003
Uniform Mechanical Code - 2003
State Energy Code (ASHRAE Standard 90.1-2004)

SITE SUMMARY:

TOTAL ACRES - 20 ACRES

SCOPE OF WORK:

THIS PROJECT INCLUDES THE CONSTRUCTION OF AN OFFICE BUILDING AND LABORATORY / SHOP AND STORAGE BUILDING, VEHICLE / EQUIPMENT STORAGE BUILDING, A TRUCK WASH AND A FUEL STATION. SITE IMPROVEMENT WORK INCLUDES SERVICE UTILITIES, ASPHALT AND CONCRETE DRIVES, PARKING LOTS, SECURITY FENCING AND LANDSCAPING.

Texas Department of Transportation - Maintenance Division
150 East Riverside Drive
Austin, Texas 78704
(512) 416-3048

AREA ENGINEER AND MAINTENANCE FACILITY
Austin, Texas
Karl Oberlander, PMP, RA - Project Manager - (512) 416-2463

Copyright © 2006 Texas Department of Transportation

PROJECT:
BELTON AREA ENGINEER AND MAINTENANCE FACILITY

LOOP 121 AT CONNELL STREET, BELTON, TX.

WACO DISTRICT - 09
PROJECT NUMBER: CBC-4704-00-668

INDEX OF DRAWINGS

COVERSHEET

CIVIL

C1.0 DIMENSIONAL CONTROL PLAN
C2.0 GRADING AND DRAINAGE PLAN
C3.0 WATER AND SANITARY SEWER PLAN
C3.1 WATER AND SANITARY SEWER DETAILS
C4.0 PAVING PLAN
C4.1 PAVING DETAILS
C5.0 EROSION CONTROL PLAN
C5.1 EROSION CONTROL DETAILS

ARCHITECTURAL

G1.1 ABBREVIATIONS AND SYMBOLS
A1.1 SITE PLAN
A1.3 SITE DETAILS
A1.4 SECURITY GATE AND FENCE
A2.1 FLOOR PLAN – OFFICE
A2.2 FLOOR PLAN – LAB/SHOP
A2.3 FLOOR PLAN – VEHICLE STORAGE
A2.4 FLOOR PLAN – TRUCK WASH
A2.5 FUEL STATION/LPG PLANS & DETAILS
A3.1 ROOF PLAN – OFFICE
A3.2 ROOF PLAN – LAB/SHOP
A3.3 ROOF PLAN – TRUCK WASH & VEHICLE STORAGE
A4.1 REFLECTED CEILING PLAN – OFFICE
A4.2 REFLECTED CEILING PLAN – LAB/SHOP
A4.3 REFLECTED CEILING PLAN – VEHICLE STORAGE
A5.1 EXTERIOR ELEVATIONS – OFFICE
A5.2 EXTERIOR ELEVATIONS – LAB/SHOP
A5.3 EXTERIOR ELEVATIONS – VEHICLE STORAGE
A5.4 EXTERIOR ELEVATIONS – TRUCK WASH
A7.1 BUILDING SECTIONS – OFFICE
A7.2 BUILDING SECTION – LAB/SHOP
A9.6 DETAILS

AREA ENGINEER AND MAINTENANCE FACILITY
PROJECT NUMBER: CBC-4704-00-668

PROPERTY EXCHANGE RFQ / RFP
ATTACHMENT M - PROJECT SPECIFIC DRAWINGS AND BUILDING(S) SITE LAYOUT

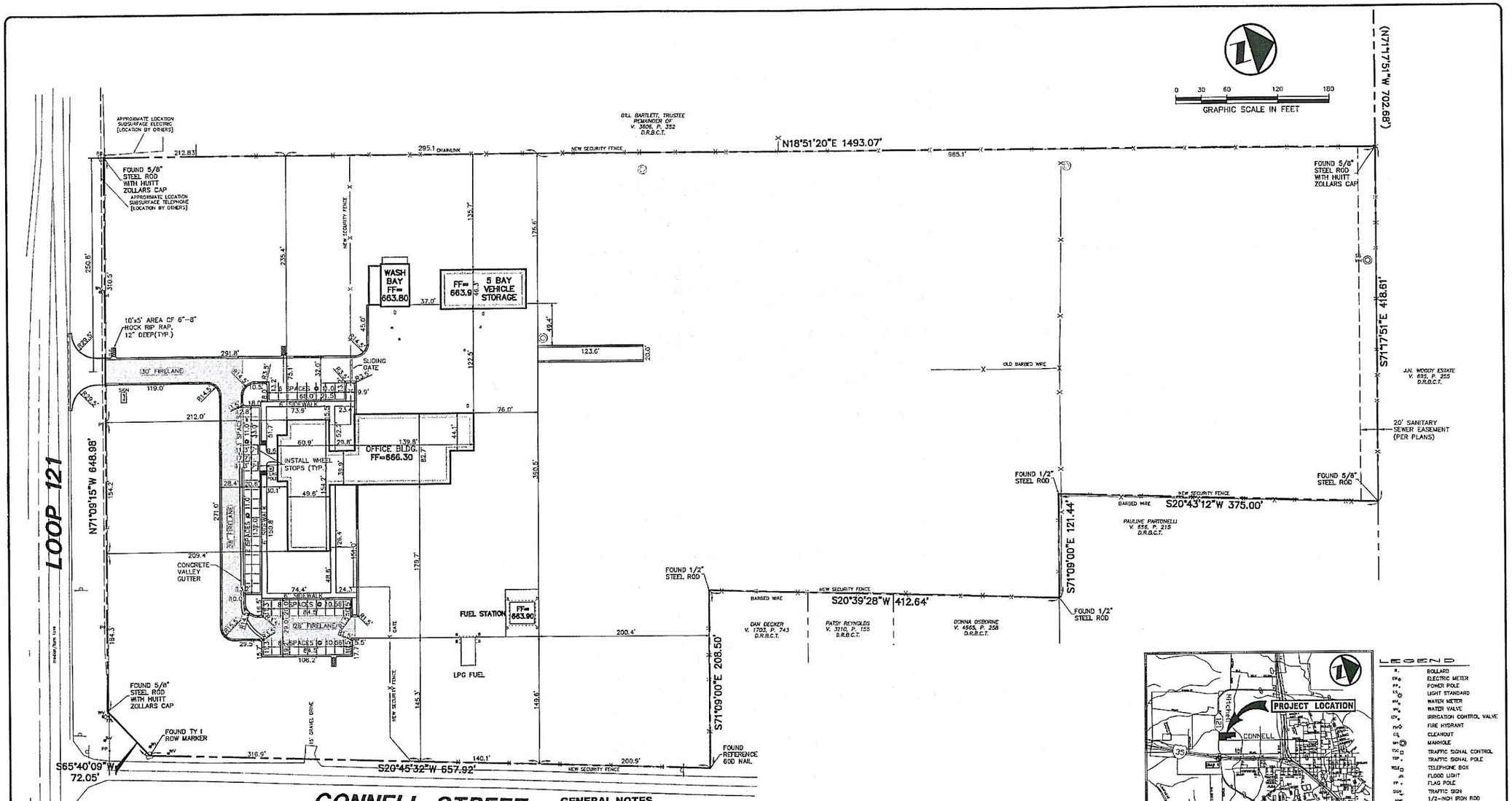

VICINITY MAP
(NOT TO SCALE)

NOTE:
CONTRACTOR TO COORDINATE WITH AREA MAINTAINENCE FACILITY OFFICE PRIOR TO ANY CONSTRUCTION WITHIN THE TxDOT RIGHT OF WAY.

BENCH MARK LIST

BM# 1

PK NAIL IN ASPHALT 145 FEET NORTH OF THE CENTER OF LOOP 121, 3.5' WEST OF THE EAST EDGE PAVEMENT (SHOULDER) ON THE EAST SIDE OF THE NORTH BOUND TRAFFIC LANE OF INTERSTATE NO. 35.

ELEV = 619.91'

GENERAL NOTES

1. ALL WORK, UNLESS OTHERWISE NOTED, SHALL CONFORM TO THE STANDARD SPECIFICATIONS FOR CONSTRUCTION AND MAINTENANCE OF HIGHWAYS, STREETS AND BRIDGES, ISSUED BY THE TEXAS DEPARTMENT OF TRANSPORTATION.
2. PRIOR TO ANY CONSTRUCTION, THE CONTRACTOR SHALL BE FAMILIAR WITH THE PLANS INCLUDING ALL NOTES, THE STANDARD SPECIFICATIONS FOR PUBLIC WORKS CONSTRUCTION AND ANY OTHER APPLICABLE STANDARD AND SPECIFICATIONS RELEVANT TO THE PROPER COMPLETION OF THE WORK SPECIFIED. FAILURE ON THE PART OF THE CONTRACTOR TO BE FAMILIAR WITH ALL STANDARDS AND SPECIFICATION PERTAINING TO THIS WORK SHALL IN NO WAY RELIEVE THE CONTRACTOR OF RESPONSIBILITY OF PERFORMING THE WORK IN ACCORDANCE WITH ALL SUCH APPLICABLE STANDARDS AND SPECIFICATIONS.
3. THE HORIZONTAL AND VERTICAL LOCATIONS OF EXISTING SUBSURFACE UTILITIES HAVE BEEN DETERMINED FROM DATA RECORDED BY OTHERS. CONTRACTOR SHALL VERIFY THAT NECESSARY CROSSING CLEARANCES BETWEEN EXISTING AND PROPOSED UTILITIES EXIST PRIOR TO CONSTRUCTION OF ANY SUCH CROSSING. IT WILL BE THE RESPONSIBILITY OF THE CONTRACTOR TO PROTECT ALL UTILITIES IN THE CONSTRUCTION OF THIS PROJECT. CONTRACTOR TO VERIFY SIZE AND LOCATION OF ALL UTILITIES PRIOR TO CONSTRUCTION.
4. IT WILL BE THE RESPONSIBILITY OF THE CONTRACTOR TO PROTECT ALL MANHOLES, CLEANOUTS, VALVE BOXES, FIRE HYDRANTS, ETC.. THEY MUST BE ADJUSTED TO PROPER LINE AND GRADE BY THE CONTRACTOR PRIOR TO AND AFTER THE PLACING OF PERMANENT PAVING AND GRADING. UTILITIES MUST BE MAINTAINED TO PROPER LINE AND GRADE DURING THE CONSTRUCTION OF THE PAVING FOR THIS DEVELOPMENT.
5.
   - 5.1 PROTECT AND MAINTAIN ROADWAY TRAFFIC THROUGHOUT THE PROJECT, PROVIDING A MINIMUM OF ONE (1) LANE OPEN IN EACH DIRECTION;
   - 5.2 PROVIDE AND MAINTAIN INTERIM ACCESS FROM ROADWAYS CURRENTLY IN USE TO ALL DRIVEWAYS AND INTERSECTING STREETS OR ALLEYS;
   - 5.3 MAINTAIN NORMAL PROJECT DRAINAGE UNTIL NEW DRAINAGE FACILITIES ARE FUNCTIONAL, INCLUDING, WHERE NECESSARY, INTERIM REPLACEMENT OF EXISTING DRAINAGE STRUCTURES REMOVED FOR CONSTRUCTION OF NEW DRAINAGE FACILITIES.
   - 5.4 MAINTAIN ALL WORK AND MATERIAL STORAGE AREAS IN ORDERLY CONDITION, FREE OF DEBRIS AND WASTE; ON COMPLETION OF CONSTRUCTION, CLEAN UP THE PROJECT AND ADJACENT AFFECTED AREAS TO ACCEPTABLE CONDITION, ALL AS PROVIDED IN THE GENERAL CONDITIONS.
6. THE CONTRACTOR IS RESPONSIBLE FOR COMPLIANCE WITH ALL FEDERAL, STATE AND LOCAL REGULATIONS REGARDING TRENCH SAFETY.
7. REFER TO ARCHITECTURAL AND STRUCTURAL PLANS TO VERIFY ALL BUILDING DIMENSIONS.
8. REFER TO ARCHITECTURAL PLANS FOR DETAILED BUILDING ENTRANCE LAYOUTS, RAMPS, LANDSCAPE AND SIDEWALKS.
9. BARRICADING AND PROJECT SIGNS SHALL CONFORM TO TEXAS DEPARTMENT OF TRANSPORTATION MANUAL OF UNIFORM TRAFFIC CONTROL DEVICES AND LATEST UPDATES.
10. CONTRACTOR TO COORDINATE WITH THE UTILITY PROVIDER ON THE REMOVAL OF EXISTING POWER POLES AND OVER HEAD LINES.
11. ALL WORK IN HIGHWAY R.O.W. TO BE COORDINATED WITH ROADWAY MAINTENANCE SUPERVISOR.

ALL DIMENSIONS ARE TO BACK-OF-CURB UNLESS OTHERWISE NOTED.

ISSUED FOR PRELIMINARY PRICING PURPOSES ONLY
(SUBJECT TO REVISION PRIOR TO CONSTRUCTION)

THESE DOCUMENTS HAVE BEEN PREPARED BY THE ENGINEER WITH THE INTENT OF COMPLYING WITH ALL CITY STANDARD REQUIREMENTS. THESE DOCUMENTS HAVE NOT BEEN APPROVED AND RELEASED FOR CONSTRUCTION BY THE CITY AS OF THIS DATE AND, THEREFORE, REVISIONS MAY BE REQUIRED PRIOR TO CONSTRUCTION. BY ANY USE OF THESE DOCUMENTS, THE USER AFFIRMS THEIR UNDERSTANDING OF THE PRELIMINARY STATUS OF THE PLANS AND THE POTENTIAL FOR REVISION PRIOR TO ANY CONSTRUCTION.

PRELIMINARY
NOT FOR CONSTRUCTION

THIS DOCUMENT IS ISSUED FOR THE PURPOSE OF SCHEMATIC REVIEW ONLY AND IS NOT INTENDED FOR PERMITTING, BIDDING, OR CONSTRUCTION PURPOSES.

PLANS PREPARED UNDER THE DIRECT SUPERVISION OF C. JACK EVANS, P.E. TEXAS REGISTRATION NO. 93840
DATE: 08/02/2006

PK FILE: 2742-06.071

Texas Department of Transportation
125 E. 11th Street
Austin, Texas 78701-2483
(512) 416-3048

Copyright © 2003 Texas Department of Transportation

Pacheco Koch Consulting Engineers
8350 N. CENTRAL EXPY., STE. 1000
DALLAS, TEXAS 75206
PH. 972.235.3031
FAX 972.235.9544

BELTON AREA ENGINEER AND MAINTENANCE FACILITY
BELTON, BELL COUNTY
WACO DISTRICT
DIMENSIONAL CONTROL PLAN

Revisions

Drawn by: KFW

Project No.
2742-06.071

Date
4.10.2006
Sheet No.

SHEET **C1.0**

DWG FILE: 2742-06.071CV.DWG

KWHITES
08/07/2006 - 11:22AM
U:\PWE-24\2742-06.071\DWG\2742-06.071CV.DWG

PHASE LINE:
EARTHWORK TO BE PERFORMED NORTH OF PHASE LINE IS TO BE BID OUT AS AN ALTERNATE ITEM. ASSUME 4:1 SLOPE FROM EDGE OF ASPHALT UNTIL GRADE MEETS WITH NATURAL TOPOGRAPHY.

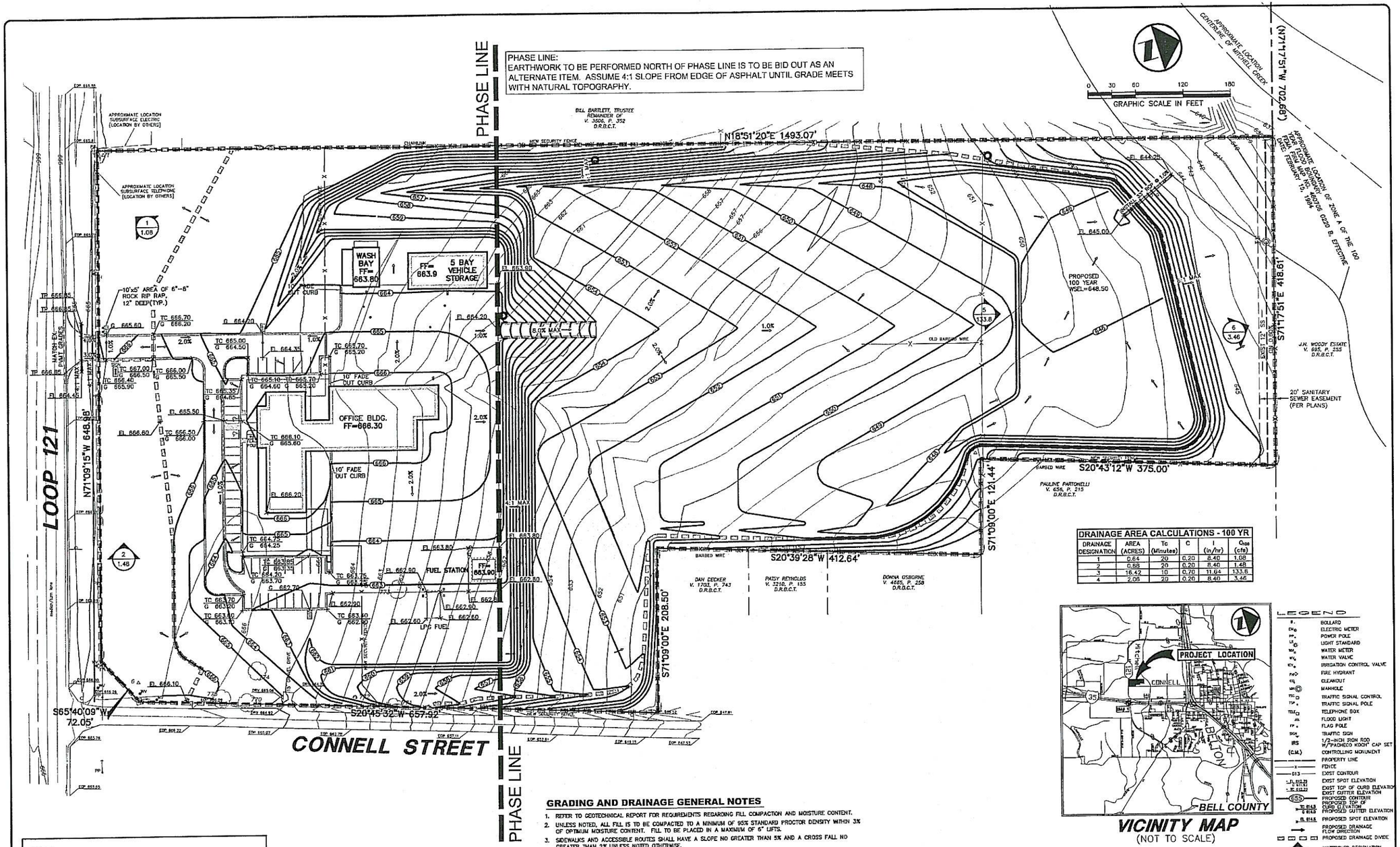

DRAINAGE AREA CALCULATIONS - 100 YR					
DRAINAGE DESIGNATION	AREA (ACRES)	Tc (Minutes)	C	I (in/hr)	Q_{100} (cfs)
1	0.64	20	0.20	8.40	1.08
2	0.88	20	0.20	8.40	1.48
3	16.42	10	0.70	11.64	133.8
4	2.06	20	0.20	8.40	3.46

VICINITY MAP
(NOT TO SCALE)

LEGEND

- BOLLARD
- ELECTRIC METER
- POWER POLE
- LIGHT STANDARD
- WATER METER
- WATER VALVE
- IRRIGATION CONTROL VALVE
- FIRE HYDRANT
- CLEANOUT
- MANHOLE
- TRAFFIC SIGNAL CONTROL
- TRAFFIC SIGNAL POLE
- TELEPHONE BOX
- FLOOD LIGHT
- FLAG POLE
- TRAFFIC SIGN
- 1/2-INCH IRON ROD W/"PACHECO KOCH" CAP SET
- (C.M.) CONTROLLING MONUMENT
- PROPERTY LINE
- FENCE
- 613 EXIST CONTOUR
- EXIST SPOT ELEVATION
- EXIST TOP OF CURB ELEVATION / EXIST GUTTER ELEVATION
- 655 PROPOSED CONTOUR
- PROPOSED TOP OF CURB ELEVATION / PROPOSED GUTTER ELEVATION
- PROPOSED SPOT ELEVATION
- PROPOSED DRAINAGE FLOW DIRECTION
- PROPOSED DRAINAGE DIVIDE
- 12 / 3.2 WATERSHED DESIGNATION NUMBER / EXPECTED Q100 IN CUBIC FEET PER SECOND

NOTE:
ELEVATIONS SHOWN WITHIN THE PROPERTY BOUNDARY HAVE NOT BEEN VERIFIED ON THE GROUND, AND ARE BASED ON TXDOT SURVEY PRIOR TO ANY DEMOLITION WORK. CONTRACTOR IS TO CONFIRM ELEVATION DIFFERENCES PRIOR TO COMMENCING WORK.

BENCH MARK LIST

BM# 1

PK NAIL IN ASPHALT 145 FEET NORTH OF THE CENTER OF LOOP 121, 3.5' WEST OF THE EAST EDGE PAVEMENT (SHOULDER) ON THE EAST SIDE OF THE NORTH BOUND TRAFFIC LANE OF INTERSTATE NO. 35.

ELEV = 619.91'

GRADING AND DRAINAGE GENERAL NOTES

1. REFER TO GEOTECHNICAL REPORT FOR REQUIREMENTS REGARDING FILL COMPACTION AND MOISTURE CONTENT.
2. UNLESS NOTED, ALL FILL IS TO BE COMPACTED TO A MINIMUM OF 95% STANDARD PROCTOR DENSITY WITHIN 3% OF OPTIMUM MOISTURE CONTENT. FILL TO BE PLACED IN A MAXIMUM OF 6" LIFTS.
3. SIDEWALKS AND ACCESSIBLE ROUTES SHALL HAVE A SLOPE NO GREATER THAN 5% AND A CROSS FALL NO GREATER THAN 2% UNLESS NOTED OTHERWISE.
4. GRADING OF ALL HANDICAPPED SPACES AND ROUTES TO CONFORM TO STATE, LOCAL AND FEDERAL GUIDELINES.
5. UNLESS NOTED, STORM DRAIN LINES MAY BE OF THE FOLLOWING MATERIALS:
   A. RCP C-76, CLASS III
   B. ADS N-12
   C. HANCOR HI-Q

   AND INSTALLED IN ACCORDANCE WITH MANUFACTURER'S SPECIFICATIONS.
6. FINAL PAVING, CURB AND SIDEWALK ELEVATIONS WILL BE PLACED AT PLUS OR MINUS 0.03 FOOT.
7. REFER TO LANDSCAPE SPECIFICATION FOR SEEDING AND SODDING REQUIREMENTS.
8. ANY CONCRETE, ROCK OR MATERIAL DEEMED UNSUITABLE FOR SUBGRADE, BY ENGINEER, SHALL BE DISPOSED OF OFFSITE AT CONTRACTOR'S EXPENSE.
9. TRENCH BACKFILL MATERIAL SHALL CONFORM TO THE REQUIREMENTS OF TXDOT ITEM 400 AND SHALL BE MECHANICALLY COMPACTED IN ACCORDANCE WITH TXDOT ITEM 400 TO A MINIMUM OF 95% STANDARD PROCTOR DENSITY UNLESS OTHERWISE SHOWN ON THESE PLANS OR STATED IN THE STANDARD TXDOT SPECIFICATIONS.
10. EMBEDMENT SHALL CONFORM TO THE REQUIREMENTS OF TXDOT ITEM 400 UNLESS OTHERWISE SHOWN ON THESE PLANS OR STATED IN THE STANDARD TXDOT SPECIFICATIONS.
11. CRUSHED STONE BEDDING OR APPROVED EQUAL SHALL BE PROVIDED BY THE CONTRACTOR WHEN ROCK IS ENCOUNTERED IN TRENCHES. THERE SHALL BE NO ADDITIONAL PAY ITEM OF THE CRUSHED STONE BEDDING.
12. IF REQUIRED DUE TO CONSTRUCTION, POWER POLES TO BE BRACED OR RELOCATED AT CONTRACTORS EXPENSE.

ISSUED FOR PRELIMINARY PRICING PURPOSES ONLY
(SUBJECT TO REVISION PRIOR TO CONSTRUCTION)

THESE DOCUMENTS HAVE BEEN PREPARED BY THE ENGINEER WITH THE INTENT OF COMPLYING WITH ALL CITY STANDARD REQUIREMENTS. THESE DOCUMENTS HAVE **NOT** BEEN APPROVED AND RELEASED FOR CONSTRUCTION BY THE CITY AS OF THIS DATE AND, THEREFORE, REVISIONS MAY BE REQUIRED PRIOR TO CONSTRUCTION. BY ANY USE OF THESE DOCUMENTS, THE USER AFFIRMS THEIR UNDERSTANDING OF THE PRELIMINARY STATUS OF THE PLANS AND THE POTENTIAL FOR REVISION PRIOR TO ANY CONSTRUCTION.

PRELIMINARY
NOT FOR CONSTRUCTION

THIS DOCUMENT IS ISSUED FOR THE PURPOSE OF SCHEMATIC REVIEW ONLY AND IS NOT INTENDED FOR PERMITTING, BIDDING, OR CONSTRUCTION PURPOSES.

PLANS PREPARED UNDER THE DIRECT SUPERVISION OF C. JACK EVANS, P.E.
TEXAS REGISTRATION NO. 93840
DATE: 06/02/2006

Texas Department of Transportation
125 E. 11th Street
Austin, Texas 78701-2483
(512) 416-3048

Copyright © 2003 Texas Department of Transportation

Pacheco Koch Consulting Engineers
8500 N. CENTRAL EXPY., STE. 1000
DALLAS, TEXAS 75206
PH 972.235.3231
FAX 972.235.9544

BELTON AREA ENGINEER AND MAINTENANCE FACILITY
BELTON, BELL COUNTY
WACO DISTRICT
GRADING & DRAINAGE PLAN

Revisions

Drawn by: KFW

Project No.
2742-06.071

Date
4.10.2006

Sheet No.

SHEET **C2.0**

DWG FILE: 2742-06.071CV.DWG

PK FILE: 2742-06.071

KWM375
06/02/2006 - 11:23AM
M:\DWG-27\2742-06.071\DWG\2742-06.071CV.DWG

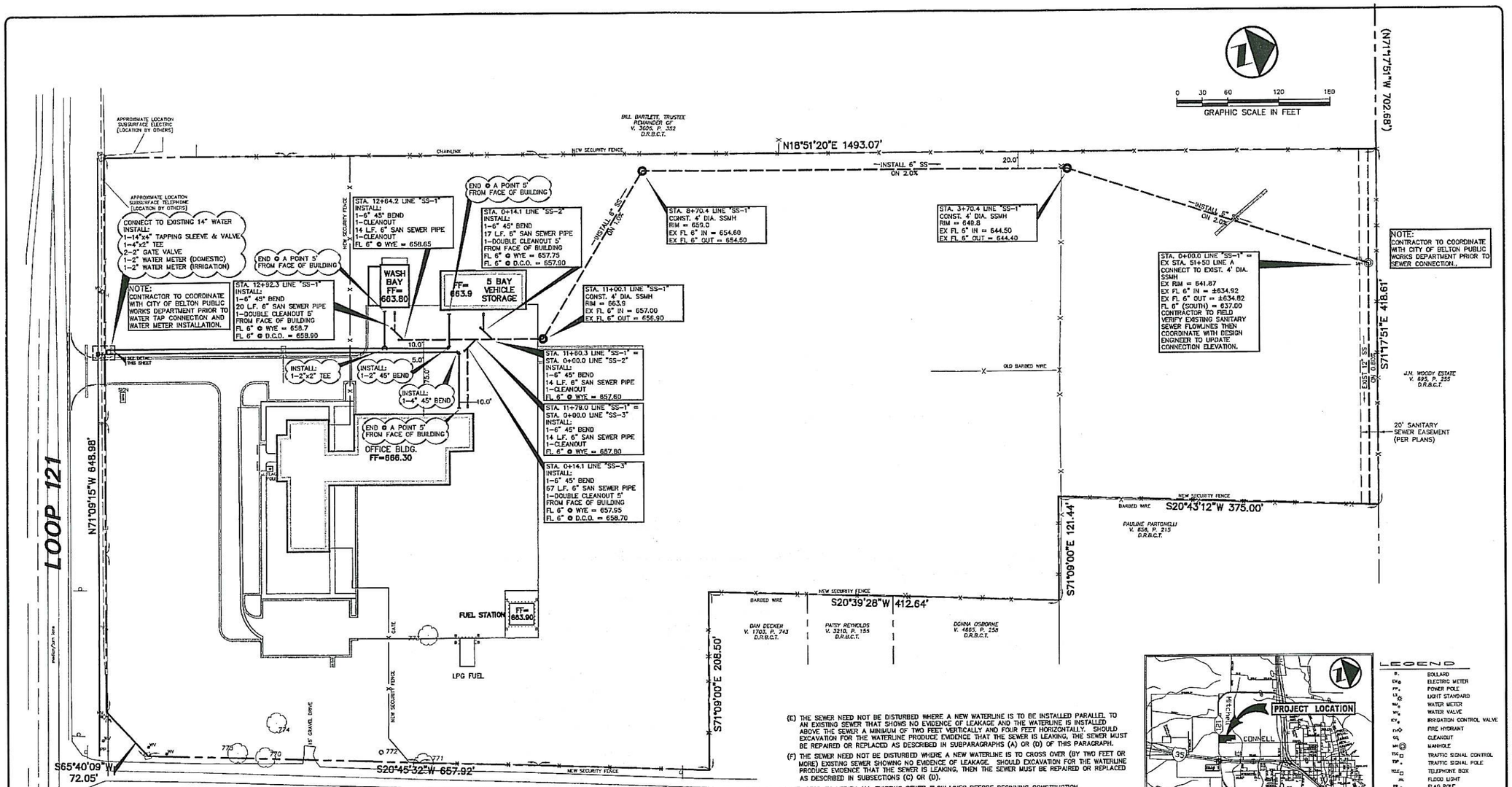

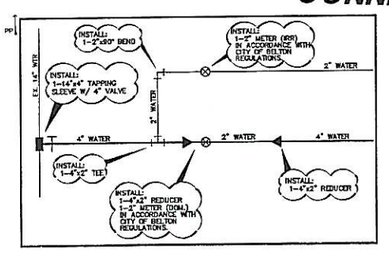

BENCH MARK LIST

BM# 1

PK NAIL IN ASPHALT 145 FEET NORTH OF THE CENTER OF LOOP 121, 3.5' WEST OF THE EAST EDGE PAVEMENT (SHOULDER) ON THE EAST SIDE OF THE NORTH BOUND TRAFFIC LANE OF INTERSTATE NO. 35.

ELEV = 619.91'

WATER AND SANITARY SEWER GENERAL NOTES

1. UNLESS OTHERWISE NOTED, ALL CONCRETE SHALL BE CLASS "A", (3000 PSI).
2. ALL WATER MAINS SHALL BE PVC C900, DR 18, CLASS 150.
3. WATER AND SANITARY SEWER SERVICES SHALL MEET PLUMBING CODE REQUIREMENTS.
4. ALL WATER MAINS UNLESS OTHERWISE NOTED SHALL HAVE A MINIMUM COVER OF 48" BELOW FINISHED GRADE.
5. SANITARY SEWER PIPE SHALL BE PVC SDR-35.
6. WHEN WATER MAINS AND SANITARY SEWERS ARE INSTALLED, THEY SHALL BE INSTALLED NO CLOSER TO EACH OTHER THAN NINE FEET IN ALL DIRECTIONS AND PARALLEL LINES MUST BE INSTALLED IN SEPARATE TRENCHES. WHERE THE NINE FOOT SEPARATION DISTANCE CANNOT BE ACHIEVED, THE FOLLOWING GUIDELINES SHALL APPLY:

   (A) WHERE A SANITARY SEWER PARALLELS A WATERLINE, THE SEWER SHALL BE CONSTRUCTED OF CAST IRON, DUCTILE IRON OR PVC MEETING ASTM SPECIFICATIONS WITH A PRESSURE RATING FOR BOTH THE PIPE AND JOINTS OF 150 PSI. THE VERTICAL SEPARATION SHALL BE A MINIMUM OF TWO FEET BETWEEN OUTSIDE DIAMETERS AND THE HORIZONTAL SEPARATION SHALL BE A MINIMUM OF FOUR FEET BETWEEN OUTSIDE DIAMETERS. THE SEWER SHALL BE LOCATED BELOW THE WATERLINE.

   (B) WHERE A SANITARY SEWER CROSSES A WATERLINE AND THE SEWER IS CONSTRUCTED OF CAST IRON, DUCTILE IRON OR PVC WITH A MINIMUM PRESSURE RATING OF 150 PSI, AN ABSOLUTE MINIMUM DISTANCE OF SIX INCHES BETWEEN OUTSIDE DIAMETERS SHALL BE MAINTAINED. IN ADDITION, THE SEWER SHALL BE LOCATED BELOW THE WATERLINE WHERE POSSIBLE AND ONE LENGTH OF THE SEWER PIPE MUST BE CENTERED ON THE WATERLINE.

   (C) WHERE A SEWER CROSSES UNDER A WATERLINE AND THE SEWER IS CONSTRUCTED OF ABS TRUSS PIPE, SIMILAR SEMI-RIGID PLASTIC COMPOSITE PIPE, CLAY PIPE OR CONCRETE PIPE WITH GASKETED JOINTS, A MINIMUM TWO FOOT SEPARATION DISTANCE SHALL BE MAINTAINED. IN ADDITION, THE SEWER SHALL BE LOCATED BELOW THE WATERLINE WHERE POSSIBLE AND ONE LENGTH OF THE SEWER PIPE MUST BE CENTERED ON THE WATERLINE.

   (D) WHERE A SEWER CROSSES OVER A WATERLINE ALL PORTIONS OF THE SEWER WITHIN NINE FEET OF THE WATERLINE SHALL BE CONSTRUCTED OF CAST IRON, DUCTILE IRON OR PVC PIPE WITH A PRESSURE RATING OF AT LEAST 150 PSI USING APPROPRIATE ADAPTERS. IN LIEU OF THIS PROCEDURE, THE NEW CONVEYANCE MAY BE ENCASED IN A JOINT OF 150 PSI PRESSURE CLASS PIPE AT LEAST 18 FEET LONG AND TWO NOMINAL SIZES LARGER THAN THE NEW CONVEYANCE. THE SPACE AROUND THE CARRIER PIPE SHALL BE SUPPORTED AT FIVE FEET INTERVALS WITH SPACERS OR BE FILLED TO THE SPRING LINE WITH WASHED SAND. THE ENCASEMENT PIPE SHOULD BE CENTERED ON THE CROSSING AND BOTH ENDS SEALED WITH CEMENT GROUT OR MANUFACTURED SEAL.

   (E) THE SEWER NEED NOT BE DISTURBED WHERE A NEW WATERLINE IS TO BE INSTALLED PARALLEL TO AN EXISTING SEWER THAT SHOWS NO EVIDENCE OF LEAKAGE AND THE WATERLINE IS INSTALLED ABOVE THE SEWER A MINIMUM OF TWO FEET VERTICALLY AND FOUR FEET HORIZONTALLY. SHOULD EXCAVATION FOR THE WATERLINE PRODUCE EVIDENCE THAT THE SEWER IS LEAKING, THE SEWER MUST BE REPAIRED OR REPLACED AS DESCRIBED IN SUBPARAGRAPHS (A) OR (D) OF THIS PARAGRAPH.

   (F) THE SEWER NEED NOT BE DISTURBED WHERE A NEW WATERLINE IS TO CROSS OVER (BY TWO FEET OR MORE) EXISTING SEWER SHOWING NO EVIDENCE OF LEAKAGE. SHOULD EXCAVATION FOR THE WATERLINE PRODUCE EVIDENCE THAT THE SEWER IS LEAKING, THEN THE SEWER MUST BE REPAIRED OR REPLACED AS DESCRIBED IN SUBSECTIONS (C) OR (D).

7. CONTRACTOR TO VERIFY ALL EXISTING SEWER FLOW LINES BEFORE BEGINNING CONSTRUCTION.
8. CONTRACTOR SHALL TIE A 1" WIDE PIECE OF RED PLASTIC FLAGGING TO THE END OF SEWER SERVICE AND SHALL LEAVE A MINIMUM OF 36" OF FLAGGING EXPOSED AFTER BACKFILL. AFTER CURB AND PAVING IS COMPLETED, CONTRACTOR SHALL MARK THE LOCATION OF THE SEWER SERVICE ON THE CURB OF ALLEY IN ACCORDANCE WITH THE STANDARD CITY SPECIFICATIONS.
9. ALL SANITARY SEWER LINES SHALL BE TESTED IN ACCORDANCE WITH THE STANDARD CITY SPECIFICATIONS.
10. THE UTILITY CONTRACTOR SHALL INSTALL THE WATER SERVICES TO A POINT TWO (2') FEET BACK OF THE CURB LINE AT A DEPTH OF 12 INCHES. THE METER BOX SHALL BE FURNISHED AND INSTALLED BY THE CONTRACTOR AFTER THE PAVING CONTRACTOR HAS COMPLETED THE FINE GRADING BEHIND THE BACK OF THE CURB. EACH SERVICE LOCATION WILL BE MARKED ON THE CURB, WITH A BLUE LETTER "W" BY THE UTILITY CONTRACTOR AND TIED TO PROPERTY CORNERS ON THE "RECORD DRAWINGS".
11. ALL METER BOXES SHALL BE LOCATED IN NON-TRAFFIC AREAS.
12. UTILITY TRENCHES SHALL BE BACKFILLED WITH MATERIAL MEETING STANDARD SPECIFICATIONS FOR CONSTRUCTION AND MAINTENANCE OF HIGHWAYS, STREETS AND BRIDGES, ISSUED BY THE TEXAS DEPARTMENT OF TRANSPORTATION.
13. VALVE BOXES SHALL BE FURNISHED AND SET ON EACH GATE VALVE. AFTER THE FINAL CLEAN-UP AND ALIGNMENT HAS BEEN COMPLETED, THE CONTRACTOR (UTILITY) SHALL POUR A CONCRETE BLOCK 24"X24"X6" AROUND ALL VALVE BOX TOPS WHICH SHALL BE LEVEL WITH THE FINISHED GRADES.
14. IF REQUIRED DUE TO CONSTRUCTION, POWER POLES TO BE BRACED OR RELOCATED AT CONTRACTORS EXPENSE.

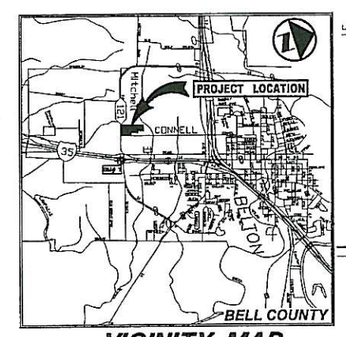

VICINITY MAP
(NOT TO SCALE)

LEGEND

B.	BOLLARD
EM	ELECTRIC METER
PP	POWER POLE
LS	LIGHT STANDARD
WM	WATER METER
WV	WATER VALVE
CV	IRRIGATION CONTROL VALVE
FH	FIRE HYDRANT
CO	CLEANOUT
MH	MANHOLE
TSC	TRAFFIC SIGNAL CONTROL
TSP	TRAFFIC SIGNAL POLE
TELE	TELEPHONE BOX
FL	FLOOD LIGHT
FP	FLAG POLE
TSS	TRAFFIC SIGN
IRS	1/2-INCH IRON ROD W/"PACHECO KOCH" CAP SET
(C.M.)	CONTROLLING MONUMENT
	PROPERTY LINE
	FENCE

ISSUED FOR PRELIMINARY PRICING PURPOSES ONLY
(SUBJECT TO REVISION PRIOR TO CONSTRUCTION)

THESE DOCUMENTS HAVE BEEN PREPARED BY THE ENGINEER WITH THE INTENT OF COMPLYING WITH ALL CITY STANDARD REQUIREMENTS. THESE DOCUMENTS HAVE **NOT** BEEN APPROVED AND RELEASED FOR CONSTRUCTION BY THE CITY AS OF THIS DATE AND, THEREFORE, REVISIONS MAY BE REQUIRED PRIOR TO CONSTRUCTION. BY ANY USE OF THESE DOCUMENTS, THE USER AFFIRMS THEIR UNDERSTANDING OF THE PRELIMINARY STATUS OF THE PLANS AND THE POTENTIAL FOR REVISION PRIOR TO ANY CONSTRUCTION.

PRELIMINARY
NOT FOR CONSTRUCTION

THIS DOCUMENT IS ISSUED FOR THE PURPOSE OF SCHEMATIC REVIEW ONLY AND IS NOT INTENDED FOR PERMITTING, BIDDING, OR CONSTRUCTION PURPOSES.

PLANS PREPARED UNDER THE DIRECT SUPERVISION OF C. JACK EVANS, P.E. TEXAS REGISTRATION NO. 93840
DATE: 06/02/2006

Texas Department of Transportation
125 E. 11th Street
Austin, Texas 78701-2483
(512) 416-3048

Copyright © 2005 Texas Department of Transportation

Pacheco Koch Consulting Engineers
8350 N. CENTRAL EXPY., STE. 1000
DALLAS, TEXAS 75206
TEL 972.235.3031
FAX 972.235.9844

BELTON AREA ENGINEER AND MAINTENANCE FACILITY
BELTON, BELL COUNTY
WACO DISTRICT
WATER & SANITARY SEWER PLAN

Revisions

Drawn by: KFW

Project No. 2742-06.071

Date 4.10.2006

Sheet No.

SHEET **C3.0**

DWG FILE: 2742-06.071CV.DWG

PK FILE: 2742-06.071

KWHITS
06/02/2006 - 11:26:44
M:\DWG-2\2742-06.071\DWG\2742-06.071CV.DWG

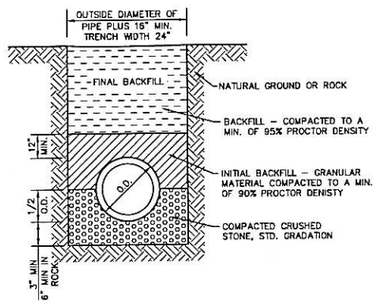

1 EMBEDMENT FOR WATER AND SANITARY SEWER PIPE

NOT TO SCALE

NOTE:

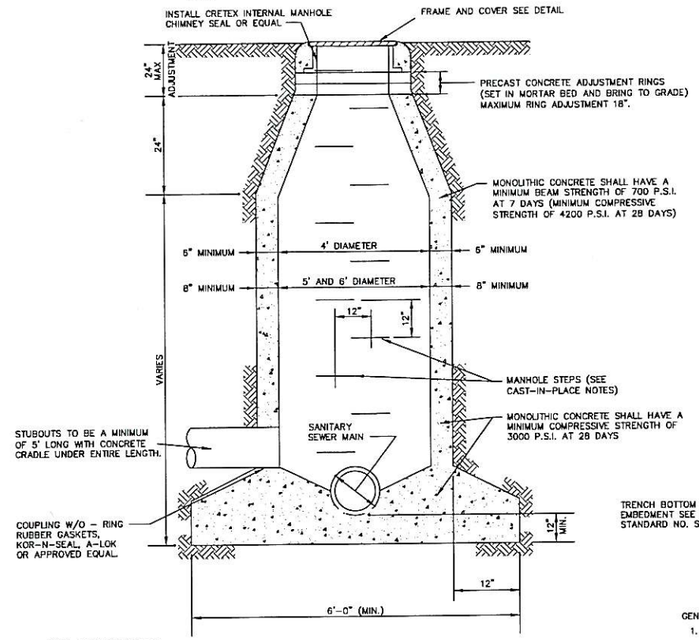

CAST-IN-PLACE NOTES:
1. CONCRETE SHALL BE A MONOLITHIC POUR.
2. MANHOLE STEPS SHALL BE COPOLYMER POLYPROPYLENE PLASTIC COATED 1/2" GRADE. 60 STEEL REINFORCEMENT STEP MODEL PS2-PF AS MANUFACTURED BY M.A. INDUSTRIES INC. OF PEACHTREE CITY, GEORGIA OR EQUAL.

2 STANDARD CAST-IN-PLACE MANHOLE

NOT TO SCALE

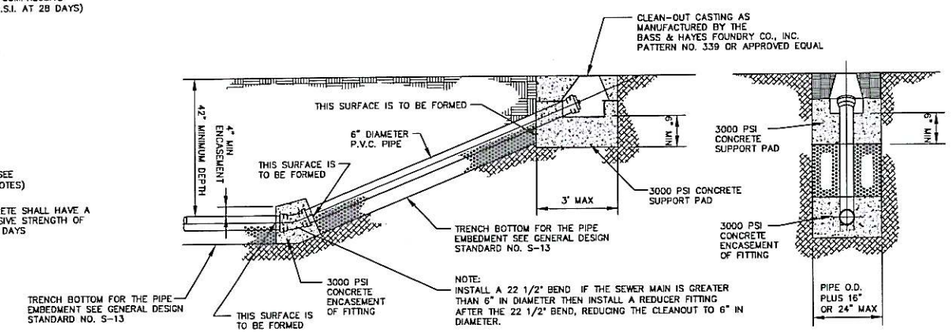

SECTIONAL ELEVATION

CROSS SECTION

GENERAL NOTES:
1. IF THE CLEANOUT PIPE IS TO BE:
   A. PVC PIPE SDR 35 (GREEN IN COLOR) AND THE TRENCH IS IN:
      1. ROCK: THE EMBEDMENT IS TO BE CLASS "C".
      2. EARTH AND 8' OR LESS IN DEPTH THE EMBEDMENT WILL BE CLASS "B-1".
      3. EARTH AND OVER 8' IN DEPTH THE EMBEDMENT WILL BE CLASS "C".
   B. VITRIFIED CLAY TILE:
      1. THE EMBEDMENT WILL BE CLASS "C".

3 SANITARY SEWER CLEANOUT ASSEMBLY

NOT TO SCALE

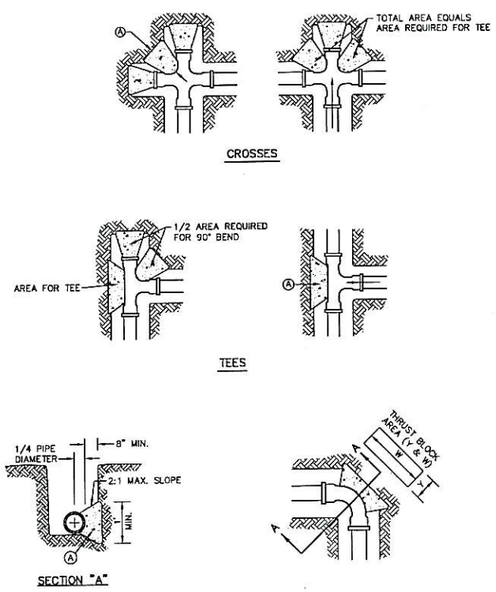

GENERAL NOTES:
1. TABLE IS BASED ON 2000#/SQ. FT. SOIL. IF CONDITIONS ARE FOUND TO INDICATE SOIL BEARING IS LESS, THE AREAS SHALL BE INCREASED ACCORDINGLY.
2. AREAS FOR PIPE LARGER THAN 18" SHALL BE CALCULATED.
3. CONCRETE SHALL HAVE A MINIMUM COMPRESSION STRENGTH OF 2500 PSI.
4. THRUST BLOCK IS TO EXTEND TO UNDISTURBED SOIL.
5. SIZE MAY BE DECREASED FOR LESSER DEGREE BENDS AS DETERMINED BY ENGINEER.
6. KEEP CONCRETE CLEAR OF M.J. OR BELL AND SPIGOT JOINTS.
7. BLOCK IN A SIMILAR MANNER AT TEES, HYDRANTS, PLUG OR OTHER LOCATIONS AS REQUIRED.
8. IF CONCRETE BLOCKS CANNOT BE POURED, THEN USE TIE-RODS OR OTHER APPROVED METHOD TO RESTRAIN THRUST.

CONSTRUCTION KEY NOTES:
A. LENGTH "Y & W" AS REQUIRED TO OBTAIN BEARING AREA AGAINST UNDISTURBED SOIL.
B. ADDITIONAL EXCAVATION IF NECESSARY TO OBTAIN REQUIRED BEARING AREA.
C. MINIMUM THRUST BLOCK AREA REQUIREMENTS FOR (Y & W) AS FOLLOWS:

PIPE SIZE	WATER PIPE	
	TEE, DEAD END 90° BEND	45° AND 22 1/2° BENDS
4" & LESS	3 SQ. FEET	3 SQ. FEET
6"	4 SQ. FEET	3 SQ. FEET
8"	6 SQ. FEET	3 SQ. FEET
10"	9 SQ. FEET	5 SQ. FEET
12"	13 SQ. FEET	7 SQ. FEET
16"	23 SQ. FEET	12 SQ. FEET
18"	29 SQ. FEET	15 SQ. FEET

4 THRUST BLOCKING

NOT TO SCALE

1. RESILIENT SEAT VALVES 4" THRU 12" IN SIZE SHALL BE IN ACCORDANCE WITH AWWA STANDARD C-509.
2. A PERMANENTLY ATTACHED VALVE EXTENSION STEM SHALL BE REQUIRED FOR ANY VALVE THATS OPERATING NUT IS LOCATED IN EXCESS OF 4 FEET BELOW THE TOP OF VALVE BOX. THIS EXTENSION SHALL BE OF SUFFICIENT LENGTH TO INSURE THAT ITS TOP IS WITHIN 4 FEET OF VALVE BOX LID.
3. DUCTILE IRON OR C-900 PVC PIPE SHALL BE USED FOR VALVE STACKS WITH ADJUSTABLE VALVE BOXES.
4. CUT A "V" SHAPED SYMBOL ON THE NEAREST CURB FACE WITH THE POINT OF THE "V" SYMBOL POINTING TOWARDS THE VALVE LOCATION.

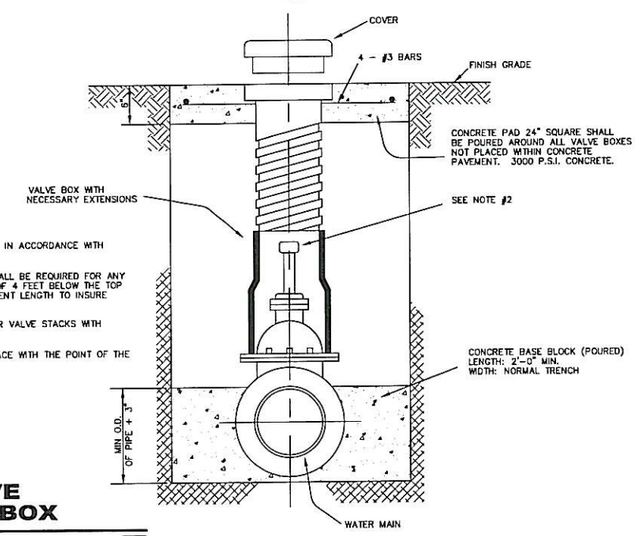

5 TYPICAL VALVE SETTING AND BOX

NOT TO SCALE

ISSUED FOR PRELIMINARY PRICING PURPOSES ONLY
(SUBJECT TO REVISION PRIOR TO CONSTRUCTION)

THESE DOCUMENTS HAVE BEEN PREPARED BY THE ENGINEER WITH THE INTENT OF COMPLYING WITH ALL CITY STANDARD REQUIREMENTS. THESE DOCUMENTS HAVE **NOT** BEEN APPROVED AND RELEASED FOR CONSTRUCTION BY THE CITY AS OF THIS DATE AND, THEREFORE, REVISIONS MAY BE REQUIRED PRIOR TO CONSTRUCTION. BY ANY USE OF THESE DOCUMENTS, THE USER AFFIRMS THEIR UNDERSTANDING OF THE PRELIMINARY STATUS OF THE PLANS AND THE POTENTIAL FOR REVISION PRIOR TO ANY CONSTRUCTION.

PRELIMINARY
NOT FOR CONSTRUCTION

THIS DOCUMENT IS ISSUED FOR THE PURPOSE OF SCHEMATIC REVIEW ONLY AND IS NOT INTENDED FOR PERMITTING, BIDDING, OR CONSTRUCTION PURPOSES.

PLANS PREPARED UNDER THE DIRECT SUPERVISION OF C. JACK EVANS, P.E. TEXAS REGISTRATION NO. 93840 DATE: 04/10/2006

Texas Department of Transportation
125 E. 11th Street
Austin, Texas 78701-2483
(512) 416-3048

Copyright © 2005 Texas Department of Transportation

Pacheco Koch Consulting Engineers
8350 N. CENTRAL EXPY., STE. 1000
DALLAS, TEXAS 75206
PH: 972.235.3031
FAX 972.235.9344

BELTON AREA ENGINEER AND MAINTAINENCE FACILITY
BELTON, BELL COUNTY
WACO DISTRICT
WATER & SANITARY SEWER DETAILS

Revisions

Drawn by: KFW

Project No. 2742-06.071

Date 4.10.2006

Sheet No.

SHEET **C3.1**

PK FILE: 2742-06.071

DWG FILE: 2742-06.071CV.DWG

KWHITE
04/10/2006 – 4:01PM
N:\DWG-27\2742-06.071\DWG\2742-06.071CV.DWG

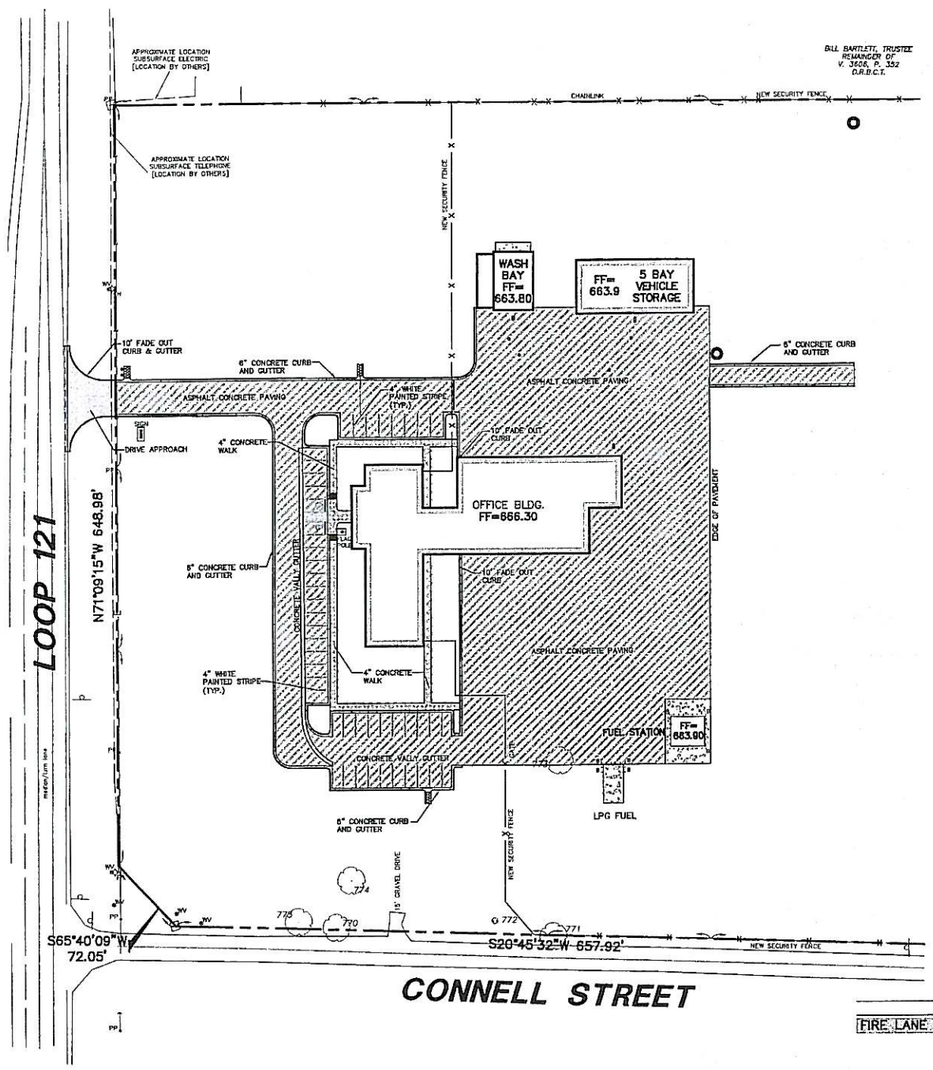

PAVING NOTES

1. ALL DIMENSIONS ARE FROM BACK OF CURB UNLESS OTHERWISE NOTED.
2. UNLESS NOTED, ALL FILL PLACED UNDER PAVING SHALL BE COMPACTED TO 95% STANDARD PROCTOR DENSITY IN 6 INCH LIFTS. REFER TO STRUCTURAL SPECIFICATION FOR FILL PLACED BENEATH BUILDING AREAS. ALL OTHER FILL AREAS TO BE COMPACTED TO 90% STANDARD PROCTOR.
3. THE CONTRACTOR SHALL SUBMIT A JOINT SPACING PLAN TO THE ENGINEER FOR APPROVAL. UNLESS NOTED, EXPANSION JOINT SPACING SHALL BE 90' MAXIMUM EACH WAY WITH NO KEYWAYS AND SAWED DUMMY JOINTS SHALL BE 15' EACH WAY.
4. TRANSVERSE CONSTRUCTION JOINTS SHALL BE USED AT THE END OF EACH DAY'S PAVING AND WHERE INTERRUPTIONS SUSPEND OPERATIONS FOR 30 MINUTES OR MORE.
5. ALL PAVEMENTS TO BE REMOVED SHALL BE SAWCUT TO A NEAT LINE, MINIMUM 1-1/2" DEEP, AND THE PAVEMENT REMOVED IN SUCH A MANNER AS TO PRESERVE THE EXISTING TRANSVERSE REINFORCING STEEL TO THE MAXIMUM EXTENT POSSIBLE.
6. ALL CURB AND GUTTER SHALL BE INTEGRAL WITH THE PAVEMENT AND HAVE THE SAME COMPRESSIVE STRENGTH.
7. PAVEMENT REINFORCEMENT SHALL BE #3 BARS, SPACED AT 16" CENTER TO CENTER EACH WAY EXCEPT WHERE NOTED IN THE PLANS.
8. BAR LAPS SHALL BE 30 DIAMETERS IN LENGTH.
9. ALL STRIPES SHALL BE 4" WIDE, UNLESS OTHERWISE NOTED.
10. INSTALLATION AND PLACEMENT OF IRRIGATION SLEEVES AND UTILITY CONDUITS SHALL BE IN ACCORDANCE WITH LANDSCAPE ARCHITECTS AND MEP PLANS.
11. SIDEWALKS AND ACCESSIBLE ROUTES SHALL HAVE A SLOPE NO GREATER THAN 5% AND A CROSS FALL NO GREATER THAN 2% UNLESS NOTED OTHERWISE.

0 30 60 120 180
GRAPHIC SCALE IN FEET

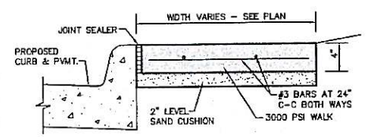

NOTES:
1. PROVIDE TOOLED JOINTS AT 4' SPACING. PROVIDE REDWOOD EXPANSION JOINTS AT 32' SPACINGS.
2. PROVIDE BITUMINOUS EXPANSION MATERIAL WHERE WALK ABUTS EXISTING IMPROVEMENTS AND AT ALL CHANGES IN GRADE.

3 WALK AT PROPOSED CURB
NOT TO SCALE

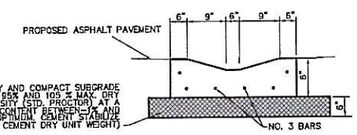

4 VALLEY GUTTER DETAIL
NOT TO SCALE

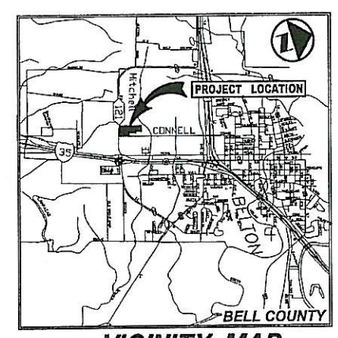

VICINITY MAP
(NOT TO SCALE)

LEGEND

- BOLLARD
- ELECTRIC METER
- POWER POLE
- LIGHT STANDARD
- WATER METER
- WATER VALVE
- IRRIGATION CONTROL VALVE
- FIRE HYDRANT
- CLEANOUT
- MANHOLE
- TRAFFIC SIGNAL CONTROL
- TRAFFIC SIGNAL POLE
- TELEPHONE BOX
- FLOOD LIGHT
- FLAG POLE
- TRAFFIC SIGN
- 1/2-INCH IRON ROD W/"PACHECO KOCH" CAP SET
- (C.M.) CONTROLLING MONUMENT
- PROPERTY LINE
- FENCE
- 6" – 3500 PSI CONCRETE (NO FLY ASH)
- ASPHALT PAVEMENT
- 4" SIDEWALK

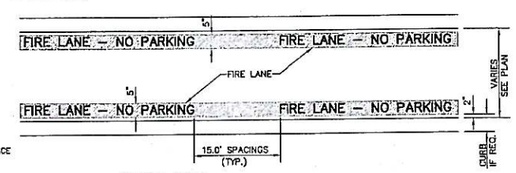

GENERAL NOTE:
A. STRIPING TO BE DONE IN ACCORDANCE WITH CITY STANDARDS.

STRIPING DETAIL NOTE:
A. PAINT:
1. STRIPE SHALL BE FIVE (5) INCHES WIDE PAINTED WITH AN EXTERIOR ACRYLIC LATEX PAINT.
   A. COLOR SHALL BE "TRAFFIC RED" GLIDDEN NO. 63251 OR EQUAL.
2. LETTERS SHALL BE FOUR (4) INCHES HIGH PAINTED WITH AN EXTERIOR ACRYLIC LATEX PAINT.
   B. COLOR SHALL BE "TRAFFIC WHITE" GLIDDEN NO. 563245 OR EQUAL.

B. APPLICATION:
1. STRIPE MAY BE BRUSHED OR SPRAYED, ONE COAT TO FINISH.
2. LETTERS SHALL BE STENCIL FORMED, BRUSH APPLIED AND SPACED AS DETAILED ON THIS SHEET.

2 FIRE LANE STRIPING
NOT TO SCALE

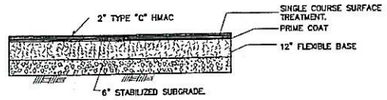

SUBGRADE TREATMENT: 3% LIME
FLEXIBLE BASE: TYPE A, GRADE 1
PRIME COAT: TYPE MC30, APPLICATION RATE 0.2 GAL/SY
SURFACE TREATMENT:
AGGREGATE: TYPE B, GRADE 4, APPLICATION RATE 0.01 CY/SY
ASPHALT: TYPE AC-20STR, APPLICATION RATE 0.4 GAL/SY
PAVEMENT SURFACE: 2" HMAC TYPE C.

1 FLEXIBLE BASE PAVEMENT SECTION
NOT TO SCALE

BENCH MARK LIST

BM# 1

PK NAIL IN ASPHALT 145 FEET NORTH OF THE CENTER OF LOOP 121, 3.5 WEST OF THE EAST EDGE PAVEMENT (SHOULDER) ON THE EAST SIDE OF THE NORTH BOUND TRAFFIC LANE OF INTERSTATE NO. 35.

ELEV = 619.91'

ISSUED FOR PRELIMINARY PRICING PURPOSES ONLY
(SUBJECT TO REVISION PRIOR TO CONSTRUCTION)

THESE DOCUMENTS HAVE BEEN PREPARED BY THE ENGINEER WITH THE INTENT OF COMPLYING WITH ALL CITY STANDARD REQUIREMENTS. THESE DOCUMENTS HAVE **NOT** BEEN APPROVED AND RELEASED FOR CONSTRUCTION BY THE CITY AS OF THIS DATE AND, THEREFORE, REVISIONS MAY BE REQUIRED PRIOR TO CONSTRUCTION. BY ANY USE OF THESE DOCUMENTS, THE USER AFFIRMS THEIR UNDERSTANDING OF THE PRELIMINARY STATUS OF THE PLANS AND THE POTENTIAL FOR REVISION PRIOR TO ANY CONSTRUCTION.

PRELIMINARY
NOT FOR CONSTRUCTION

THIS DOCUMENT IS ISSUED FOR THE PURPOSE OF SCHEMATIC REVIEW ONLY AND IS NOT INTENDED FOR PERMITTING, BIDDING, OR CONSTRUCTION PURPOSES.

PLANS PREPARED UNDER THE DIRECT SUPERVISION OF C. JACK EVANS, P.E. TEXAS REGISTRATION NO. 93840
DATE: 06/02/2006

Texas Department of Transportation
125 E. 11th Street
Austin, Texas 78701-2483
(512) 416-3048

Copyright © 2003 Texas Department of Transportation

Pacheco Koch Consulting Engineers
8350 N. CENTRAL EXPY., STE. 1000
DALLAS, TEXAS 75206
PH. 972.235.3031
FAX 972.235.5544

BELTON AREA ENGINEER AND MAINTENANCE FACILITY
BELTON, BELL COUNTY
WACO DISTRICT
PAVING PLAN

Revisions

Drawn by: KFW

Project No. 2742-06.071

Date 4.10.2006

Sheet No.

SHEET **C4.0**

PK FILE: 2742-06.071

DWG FILE: 2742-06.071CV.DWG

KWHITE
06/02/2006 – 11:22AM
M:\DWG-27\2742-06.071\DWG\2742-06.071CV.DWG

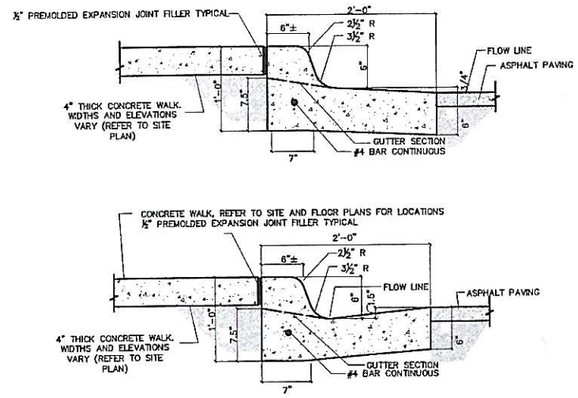

1 CONCRETE CURB & GUTTER FOR ASPHALT PAVING

NOT TO SCALE

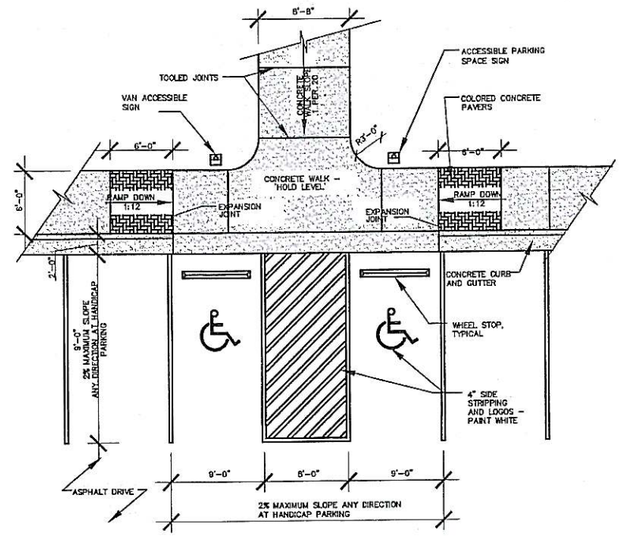

2 HANDICAP PARKING & ACCESS RAMP

NOT TO SCALE

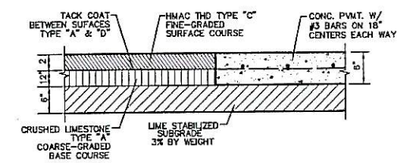

3 ASPHALT/CONCRETE TRANSITION

NOT TO SCALE

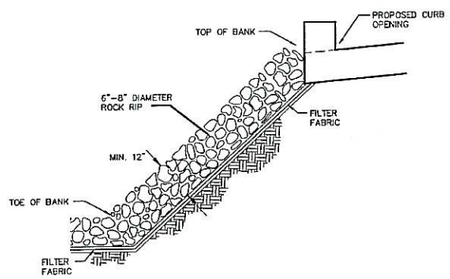

4 RIP-RAP DETAIL

NOT TO SCALE

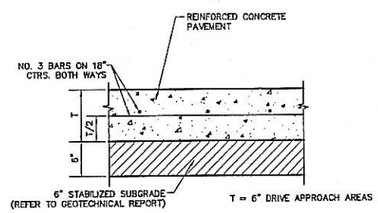

NOTE:
REFER TO GEOTECH REPORT FOR FURTHER INFORMATION.

5 CONCRETE PAVEMENT SECTION

NOT TO SCALE

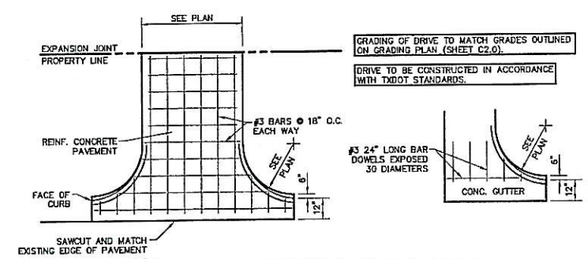

6 DRIVEWAY APPROACH

NOT TO SCALE

ISSUED FOR PRELIMINARY PRICING PURPOSES ONLY
(SUBJECT TO REVISION PRIOR TO CONSTRUCTION)

THESE DOCUMENTS HAVE BEEN PREPARED BY THE ENGINEER WITH THE INTENT OF COMPLYING WITH ALL CITY STANDARD REQUIREMENTS. THESE DOCUMENTS HAVE **NOT** BEEN APPROVED AND RELEASED FOR CONSTRUCTION BY THE CITY AS OF THIS DATE AND, THEREFORE, REVISIONS MAY BE REQUIRED PRIOR TO CONSTRUCTION. BY ANY USE OF THESE DOCUMENTS, THE USER AFFIRMS THEIR UNDERSTANDING OF THE PRELIMINARY STATUS OF THE PLANS AND THE POTENTIAL FOR REVISION PRIOR TO ANY CONSTRUCTION.

PRELIMINARY
NOT FOR CONSTRUCTION

THIS DOCUMENT IS ISSUED FOR THE PURPOSE OF SCHEMATIC REVIEW ONLY AND IS NOT INTENDED FOR PERMITTING, BIDDING, OR CONSTRUCTION PURPOSES.

PLANS PREPARED UNDER THE DIRECT SUPERVISION OF C. JACK EVANS, P.E.
TEXAS REGISTRATION NO. 93840
DATE: 06/02/2006

PK FILE: 2742-06.071

KWHITE
06/02/2006 - 11:22AM
M:\DWG-2\2742-06.071\DWG\2742-06.071CV.DWG

Texas Department of Transportation
125 E. 11th Street
Austin, Texas 78701-2483
(512) 416-3048

Copyright © 2005 Texas Department of Transportation

Pacheco Koch
Consulting Engineers
8350 N. CENTRAL EXPY., STE. 1000
DALLAS, TEXAS 75206
PH. 972.235.3031
FAX 972.235.9344

BELTON AREA ENGINEER
AND MAINTENANCE FACILITY
BELTON, BELL COUNTY
WACO DISTRICT
PAVING DETAILS

Revisions

—

Drawn by: KFW

Project No.
2742-06.071
Date
4.10.2006
Sheet No.

SHEET **C4.1**

DWG FILE: 2742-06.071CV.DWG

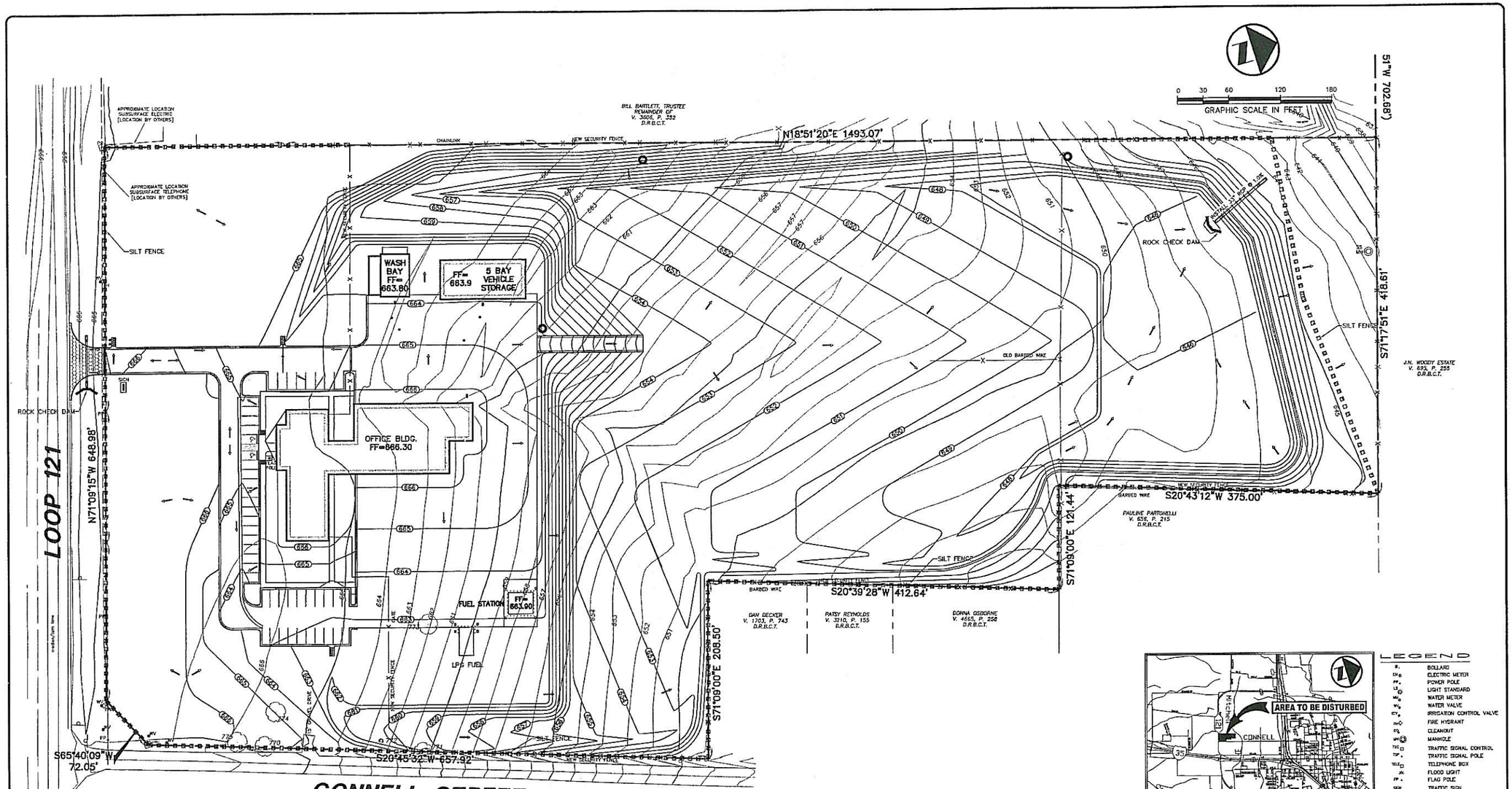

CONNELL STREET

POLLUTION CONTROL GENERAL NOTES

1. THIS PLAN HAS BEEN PREPARED TO PROVIDE MEANS TO PREVENT OR MINIMIZE POLLUTION OF STORM WATER.
2. THE CONSTRUCTION ACTIVITY INCLUDED IN THIS PLAN WILL INCLUDE:
   - A. CLEARING AND GRUBBING
   - B. ROUGH GRADING
   - C. FINAL GRADING
   - D. UTILITY INSTALLATION
   - E. PAVEMENT INSTALLATION
   - F. BUILDING CONSTRUCTION
3. THE TOTAL ESTIMATED LAND AREA TO BE DISTURBED IS 20.0 ACRES.
4. THE ESTIMATED RUNOFF COEFFICIENT UPON COMPLETION OF THE PROJECT IS 0.70.
5. THE STORM WATER EXITING THE SITE IS COLLECTED IN AN EXISTING DRAINAGE SYSTEM MAINTAINED BY THE CITY OF BELTON, TEXAS.
6. THE SOILS ON THE SITE ARE GENERALLY EXPANSIVE CLAYS.
7. THE CONTRACTOR SHALL PROVIDE AND MAINTAIN EROSION PROTECTION AROUND THE WORK AREA PERIMETER AND AT ALL INLET MOUTHS PRIOR TO COMMENCING WORK AND UNTIL THE WORK AREA HAS BEEN STABILIZED.
8. THE CONTRACTOR WILL REMOVE ALL EXCESS SOIL FROM CONSTRUCTION VEHICLES PRIOR TO EXITING THE SITE.
9. ALL DISTURBED AREAS WHICH WILL NOT BE RE-DISTURBED FOR A MINIMUM OF 21 DAYS MUST BE STABILIZED BY THE CONTRACTOR TO CONTROL EROSION.
10. THE CONTRACTOR SHALL UNDERTAKE PROPER METHODS TO REDUCE DUST GENERATION FROM THE SITE.
11. THE CONTRACTOR MUST COMPLY WITH FEDERAL, STATE AND LOCAL REGULATIONS REGARDING SEDIMENT AND EROSION CONTROL.
12. A COPY OF THIS PLAN MUST BE KEPT AT THE CONSTRUCTION FACILITY DURING THE ENTIRE CONSTRUCTION PERIOD.
13. CONSTRUCTION SEQUENCING MUST PROVIDE FOR THE EXCAVATION OF AN ON-SITE BASIN AS A SEDIMENT COLLECTION BASIN PRIOR TO THE DISTURBANCE OF GREATER THAN 10 ACRES OF LAND.
14. ALL FINISHED GRADES ARE TO BE HYDROMULCHED, SPOT SODDED OR SEEDED AND WATERED UNTIL GROWTH IS ESTABLISHED ON AND OFF-SITE.
15. A PIT OR WASH OUT BASIN SHALL BE CONSTRUCTED ON-SITE BY THE CONTRACTOR FOR THE "WASH OUT" OF CONCRETE TRUCKS.
16. A BERM OR OTHER SPILL PROTECTION MEASURE SHALL BE USED FOR ANY TEMPORARY FUEL STORAGE TANK ON SITE.
17. IF "SUMP" PUMPS ARE USED TO REMOVE WATER FROM EXCAVATED AREAS, FILTER THE DISCHARGE TO REMOVE SEDIMENT AND OTHER POLLUTANTS BEFORE THE WATER LEAVES THE SITE.
18. TO PREVENT DAMAGE TO VEGETATION IN DOWNSTREAM WATER COURSES, LIMIT ANY PROPOSED LIME STABILIZATION OPERATIONS TO THAT WHICH CAN BE MIXED AND COMPACTED BY THE END OF EACH WORK DAY. GEOTEXTILE FABRIC IS NOT EFFECTIVE IN FILTERING LIME SINCE THE GRAIN SIZE IS SMALLER THAN THE OPENING IN THE FABRIC.
19. VEHICLE PARKING AREAS, STAGING AREAS, STOCKPILES, SPOILS, ETC. SHALL BE LOCATED SUCH THAT THEY WILL NOT ADVERSELY AFFECT STORM WATER QUALITY. OTHERWISE, COVERING OR ENCIRCLING THE AREAS WITH PROTECTIVE MEASURES SHALL BE NECESSARY.
20. STORE ALL TRASH AND BUILDING MATERIALS WASTE IN AN ENCLOSURE UNTIL PROPER DISPOSAL AT OFF-SITE FACILITIES.
21. PROPOSED DETENTION FACILITY IS TO BE UTILIZED AS A TEMPORARY SEDIMENTATION BASIN DURING THE COURSE OF CONSTRUCTION.

BENCH MARK LIST

BM# 1

PK NAIL IN ASPHALT 145 FEET NORTH OF THE CENTER OF LOOP 121, 3.5 WEST OF THE EAST EDGE PAVEMENT (SHOULDER) ON THE EAST SIDE OF THE NORTH BOUND TRAFFIC LANE OF INTERSTATE NO. 35.

ELEV = 619.91'

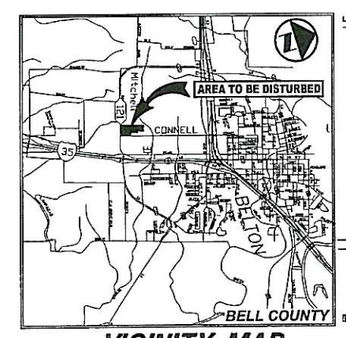

VICINITY MAP

(NOT TO SCALE)

LEGEND

- BOLLARD
- ELECTRIC METER
- POWER POLE
- LIGHT STANDARD
- WATER METER
- WATER VALVE
- IRRIGATION CONTROL VALVE
- FIRE HYDRANT
- CLEANOUT
- MANHOLE
- TRAFFIC SIGNAL CONTROL
- TRAFFIC SIGNAL POLE
- TELEPHONE BOX
- FLOOD LIGHT
- FLAG POLE
- TRAFFIC SIGN
- 1/2-INCH IRON ROD W/"PACHECO KOCH" CAP SET
- (C.M.) CONTROLLING MONUMENT
- PROPERTY LINE
- FENCE
- STABILIZED CONSTRUCTION ENTRANCE
- ROCK CHECK DAM
- SILT FENCE

ISSUED FOR PRELIMINARY PRICING PURPOSES ONLY

(SUBJECT TO REVISION PRIOR TO CONSTRUCTION)

THESE DOCUMENTS HAVE BEEN PREPARED BY THE ENGINEER WITH THE INTENT OF COMPLYING WITH ALL CITY STANDARD REQUIREMENTS. THESE DOCUMENTS HAVE **NOT** BEEN APPROVED AND RELEASED FOR CONSTRUCTION BY THE CITY AS OF THIS DATE AND, THEREFORE, REVISIONS MAY BE REQUIRED PRIOR TO CONSTRUCTION. BY ANY USE OF THESE DOCUMENTS, THE USER AFFIRMS THEIR UNDERSTANDING OF THE PRELIMINARY STATUS OF THE PLANS AND THE POTENTIAL FOR REVISION PRIOR TO ANY CONSTRUCTION.

PRELIMINARY

NOT FOR CONSTRUCTION

THIS DOCUMENT IS ISSUED FOR THE PURPOSE OF SCHEMATIC REVIEW ONLY AND IS NOT INTENDED FOR PERMITTING, BIDDING, OR CONSTRUCTION PURPOSES.

PLANS PREPARED UNDER THE DIRECT SUPERVISION OF C. JACK EVANS, P.E. TEXAS REGISTRATION NO. 93843
DATE: 06/02/2006

Texas Department of Transportation
125 E. 11th Street
Austin, Texas 78701-2483
(512) 416-3048

Copyright © 2005 Texas Department of Transportation

Pacheco Koch Consulting Engineers
8350 N. CENTRAL EXPY., STE. 1000
DALLAS, TEXAS 75206
PH. 972.235.3031
FAX 972.235.9544

BELTON AREA ENGINEER AND MAINTENANCE FACILITY

BELTON, BELL COUNTY
WACO DISTRICT

EROSION CONTROL PLAN

Revisions

Drawn by: KFW

Project No. 2742-06.071

Date 4.10.2006

Sheet No.

SHEET **C5.0**

PK FILE: 2742-06.071

DWG FILE: 2742-06.071CV.DWG

KFW/ITS
06/02/2006 - 11:23AM
M:\DWG-271\2742-06.071\DWG\2742-06.071CV.DWG

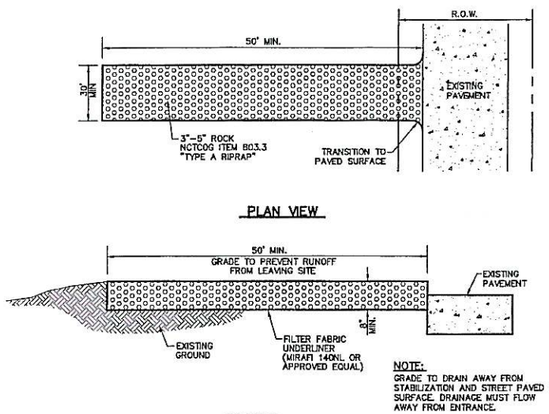

STABILIZED CONSTRUCTION ENTRANCE

1 NOT TO SCALE

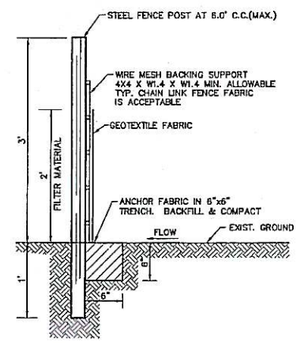

SILT FENCE

2 NOT TO SCALE

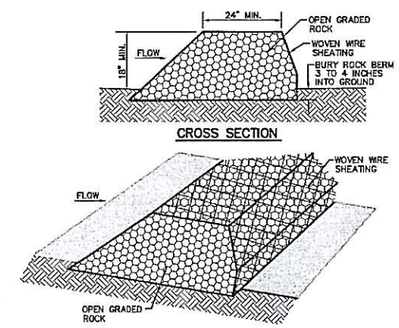

NOTES :

1. USE ONLY OPEN GRADED ROCK 4-8 INCHES IN DIAMETER FOR STREAM FLOW CONDITION. USE OPEN GRADED ROCK 3-5 INCHES IN DIAMETER FOR OTHER CONDITIONS.
2. ROCK BERM SHALL BE SECURED WITH A WOVEN WIRE SHEATHING HAVING A MAX. OPENING OF 1 INCH AND A MIN. WIRE SIZE OF 20 GAUGE AND SHALL BE BURIED IN A TRENCH APPROX. 3 TO 4 INCHES DEEP.
3. THE ROCK BERM SHALL BE INSPECTED WEEKLY OR AFTER EACH RAIN EVENT AND SHALL BE REPLACED WHEN THE STRUCTURE CEASED TO FUNCTION AS INTENDED DUE TO SILT ACCUMULATION AMONG THE ROCKS, WASH OUT, CONSTRUCTION TRAFFIC DAMAGE, ETC.
4. WHEN SILT REACHES A DEPTH EQUAL TO ONE-THIRD OF THE HEIGHT OF THE BERM OR ONE FOOT, WHICHEVER IS LESS, THE SILT SHALL BE REMOVED AND DISPOSED OF PROPERLY.
5. WHEN THE SITE IS COMPLETELY STABILIZED, THE BERM AND ACCUMULATED SILT SHALL BE REMOVED AND DISPOSED OF IN AN APPROVED MANNER.
6. ROCK BERM SHOULD BE USED AS CHECK DAMS FOR CONCENTRATED FLOW AND ARE NOT INTENDED FOR USE IN PERIMETER PROTECTION.

ROCK BERM

3 NOT TO SCALE

ISSUED FOR PRELIMINARY PRICING PURPOSES ONLY
(SUBJECT TO REVISION PRIOR TO CONSTRUCTION)

THESE DOCUMENTS HAVE BEEN PREPARED BY THE ENGINEER WITH THE INTENT OF COMPLYING WITH ALL CITY STANDARD REQUIREMENTS. THESE DOCUMENTS HAVE **NOT** BEEN APPROVED AND RELEASED FOR CONSTRUCTION BY THE CITY AS OF THIS DATE AND, THEREFORE, REVISIONS MAY BE REQUIRED PRIOR TO CONSTRUCTION. BY ANY USE OF THESE DOCUMENTS, THE USER AFFIRMS THEIR UNDERSTANDING OF THE PRELIMINARY STATUS OF THE PLANS AND THE POTENTIAL FOR REVISION PRIOR TO ANY CONSTRUCTION.

PRELIMINARY
NOT FOR CONSTRUCTION

THIS DOCUMENT IS ISSUED FOR THE PURPOSE OF SCHEMATIC REVIEW ONLY AND IS NOT INTENDED FOR PERMITTING, BIDDING, OR CONSTRUCTION PURPOSES.

PLANS PREPARED UNDER THE DIRECT SUPERVISION OF C. JACK EVANS, P.E.
TEXAS REGISTRATION NO. 93840
DATE: 06/02/2006

PK FILE: 2742-06.071

Texas Department of Transportation
125 E. 11th Street
Austin, Texas 78701-2483
(512) 416-3948

Copyright © 2005 Texas Department of Transportation

Pacheco Koch
Consulting Engineers
8303 N. CENTRAL EXPY., STE. 1000
DALLAS, TEXAS 75206
PH: 972.235.3031
FAX: 972.235.3844

BELTON AREA ENGINEER
AND MAINTENANCE FACILITY
BELTON, BELL COUNTY
WACO DISTRICT
EROSION CONTROL DETAILS

Revisions

—

Drawn by: KFW

Project No.
2742-06.071

Date
4.10.2006

Sheet No.

SHEET **C5.1**

DWG FILE: 2742-06.071CV.DWG

KWHITE
06/02/2006 - 11:23AM
M:\DWG-FT\2742-06.071\DWG\2742-06.071CV.DWG

SCHEDULE OF ABBREVIATIONS

A

A	AMPERE
AB	ANCHOR BOLT
ABV	ABOVE
A/C	AIR CONDITIONING
ACC	ACCESS
ACI	AMERICAN CONCRETE INSTITUTE
ACOUST	ACOUSTICAL
ACU	AIR CONDITIONING UNIT
ADA	AMERICANS WITH DISABILITIES ACT
ADD'L	ADDITIONAL
ADD	ADDITION OR ADDITIVE
ADH	ADHESIVE
ADJ	ADJACENT OR ADJUSTABLE
AFF	ABOVE FINISH FLOOR
AGG	AGGREGATE
AHJ	AUTHORITY HAVING JURISDICTION
AISC	AMERICAN INSTITUTE OF STEEL CONSTRUCTION
ALT	ALTERNATE
ALUM	ALUMINUM
ANC	ANCHOR
APA	AMERICAN PLYWOOD ASSOCIATION
APPROX	APPROXIMATELY
ARCH	ARCHITECT(URAL)
ASM	SMACNA ARCHITECTURAL SHEET METAL MANUAL
ASPH	ASPHALT
ASTM	AMERICAN SOCIETY FOR TESTING OF MATERIALS
ATC	ACOUSTICAL TILE CEILING
AUTO	AUTOMATIC
AUX	AUXILIARY

B

B/F	BELOW FLOOR
BD	BOARD
BEL	BELOW
BET	BETWEEN
BLDG	BUILDING
BLK	BLOCK
BLKG	BLOCKING
BM	BENCH MARK OR BEAM
BOT	BOTTOM
BRG	BEARING
BRZ	BRONZE
BUR	BUILT-UP ROOF(ING)

C

C	CHANNEL OR CONDUIT
CAB	CABINET
CB	CATCH BASIN
C/C	CENTER TO CENTER
CCT	CIRCUIT
CER	CERAMIC
CFM	CUBIC FEET PER MINUTE
CG	CORNER GUARD
CHT	CEILING HEIGHT
CI	CAST IRON
CIP	CAST IRON PIPE OR CAST IN PLACE
CISP	CAST IRON SOIL PIPE
CJ	CONTROL JOINT
CL	CENTERLINE
CLG	CEILING
CLO	CLOSET
CLR	CLEAR
CMU	CONCRETE MASONRY UNIT
CO	CLEANOUT
COMP	COMPOSITION
COMPR	COMPRESSIBLE
CONC	CONCRETE
CONF	CONFER OR CONFERENCE
CONN	CONNECTION
CONST	CONSTRUCTION
CONT	CONTINUOUS
CONTR	CONTRACTOR
CPT	CARPET(ED)
CR	COLD ROLLED
CRC	COLD ROLLED CHANNEL
CSK	COUNTERSINK (SUNK)
CSMT	CASEMENT
CT	CERAMIC TILE
CTR	CENTER
CW	COLD WATER

D

D	DEPTH OR DRAIN
DBL	DOUBLE
DC	DIRECT CURRENT
DCO	DOUBLE CLEANOUT
DEMO	DEMOLITION
DET	DETAIL
DF	DRINKING FOUNTAIN
DHW	DOMESTIC HOT WATER
DI	DUCTILE IRON
DIA	DIAMETER
DIAG	DIAGONAL
DN	DOWN
DR	DOOR OR DRIVE
DS	DOWNSPOUT
DTL	DETAIL
DWC	DRYWALL CHANNEL
DWG	DRAWING
DWL	DOWEL

E

E	EAST
EA	EACH
ECJ	EDGE CONTROL JOINT
EEW	EMERGENCY EYE WASH
EF	EACH FACE
EIFS	EXTERIOR INSULATION AND FINISH SYSTEM
EJ	EXPANSION JOINT
EL	ELEVATOR
ELEC	ELECTRIC(AL)
ELEV	ELEVATION
EMER	EMERGENCY
EMH	ELECTRICAL MANHOLE
EQ	EQUAL
EQUIP	EQUIPMENT
ESE	EMERGENCY EYE SHOWER
EW	EACH WAY
EW-EF	EACH WAY – EACH FACE
EWC	ELECTRIC WATER COOLER
EWH	ELECTRIC WATER HEATER
EXH	EXHAUST
EXIST	EXISTING
EXP	EXPOSED
EXP JT	EXPANSION JOINT
EXT	EXTERIOR
EXTEN	EXTENSION

F

F	FIRE PIPE
FA	FIRE ALARM
FCO	FLOOR CLEANOUT
FD	FLOOR DRAIN
FDC	FIRE DEPT. CONNECTION
FDN	FOUNDATION
FE	FIRE EXTINGUISHER
FEC	FIRE EXTINGUISHER CABINET
FF	FINISH FLOOR
FFE	FINISH FLOOR EXISTING
FH	FIRE HYDRANT
FHC	FIRE HOSE CABINET
FIN	FINISH
FIX	FIXTURE
FL	FLOW LINE
FLR	FLOOR
FPRF	FIREPROOFING
FR	FIRE RATED
FRMG	FRAMING
FRP	FIBERGLASS REINFORCED PLASTIC
FS	FLOOR SINK
FT	FEET
FTG	FOOTING
FVC	FIRE VALVE CABINET

G

G	GRILLE OR GAS
GA	GAUGE (GAGE)
GALV	GALVANIZED
GB	GRAB BAR OR GRADE BEAM
GCO	GRADE CLEANOUT
GI	GALVANIZED IRON OR GRATE INLET
GL	GLASS
GND	GROUND
GR	GRADE
GSU	GLAZED STRUCTURAL UNIT
GWB	GYPSUM WALLBOARD
GYP	GYPSUM

H

HB	HOSE BIBB
HC	HANDICAP
HDWE	HARDWARE
HDWD	HARDWOOD
HM	HOLLOW METAL
HND	HAND
HP	HORSE POWER
HORIZ	HORIZONTAL
HR	HOUR
HS	HIGH STRENGTH OR HEADED STUDS
HT	HEIGHT
HTR	HEATER
HVAC	HEATING/VENTILATING/ AIR CONDITIONING
HW	HOT WATER
HWTM	HOT WATER TEMPER- ATURE MAINTENANCE

I

ID	INSIDE DIAMETER
IF	INSIDE FACE
IN	INCH
INFO	INFORMATION
INSUL	INSULATION
INT	INTERIOR
INTER	INTERMEDIATE

J

J	JUNCTION
JAN	JANITOR
JB	JUNCTION BOX
JST	JOIST
JT	JOINT

K

KCJ	KEYED CONSTRUCTION JOINT
KIT	KITCHEN
KV	KILOVOLT
KVA	KILOVOLT-AMPERE
KW	KILOWATT
KWH	KILOWATT-HOUR

L

L	LENGTH
LAM	LAMINATE
LAV	LAVATORY
LF	LINEAR FEET
LH	LEFT HAND
LL	LIVE LOAD
LLH	LONG LEG HORIZONTAL
LLV	LONG LEG VERTICAL
LOC	LOCATE OR LOCATION
LONG	LONGITUDINAL
LP	LOW POINT
LT	LIGHT(S)
LTG	LIGHTING
LT WT	LIGHT WEIGHT
LVL	LEVEL

M

M	MOTOR
MAINT	MAINTENANCE
MANUF	MANUFACTURER
MAS	MASONRY
MAT'L	MATERIAL
MAX	MAXIMUM
M.B.M.	METAL BUILDING MANUFACTURER
MBR	MEMBER
MDP	MAIN DISTRIBUTION PANEL
MECH	MECHANICAL
MEP	MECHANICAL/ELECTRICAL/ PLUMBING
MFR	MANUFACTURER
MG	MIRROR GLASS
MH	MANHOLE
MIN	MINIMUM
MJA	SEALANT JOINT SHAPE DETAIL
MO	MASONRY OPENING
MPH	MILES PER HOUR
MTG	MOUNTING OR MOUNTED
MTL	METAL

N

N	NORTH
NFWH	NON-FREEZE WALL HYDRANT
NFYH	NON-FREEZE YARD HYDRANT
NIC	NOT IN CONTRACT
NO	NUMBER
NOM	NOMINAL
NTS	NOT TO SCALE

O

OA	OUTSIDE AIR
OC	ON CENTER
OCEW	ON CENTER –EACH WAY
OD	OUTSIDE DIAMETER
OF	OUTSIDE FACE
OFD	OVERFLOW DRAIN
OH	OVERHEAD
OPNG	OPENING
OPP	OPPOSITE
OSL	OUTSIDE LEG
OZ	OUNCES

P

PART	PARTITION
PL	PROPERTY LINE OR PLATE
PLAM	PLASTIC LAMINATE
PLAS	PLASTER
PLF	POUNDS PER LINEAR FOOT
PLYWD	PLYWOOD
PNL	PANEL
PR	PAIR
PROV	PROVIDE
PSF	POUNDS PER SQUARE FOOT
PSI	POUNDS PER SQUARE INCH
PSIG	POUNDS PER SQUARE INCH GAGE
PT	POINT
PTD	PAPER TOWEL DISPENSER OR PAINTED
PVC	POLYVINYL CHLORIDE
PVMT	PAVEMENT

Q

QT	QUARRY TILE
QTY	QUANTITY

R

R	RISER OR REGISTER
RA	RETURN AIR
RAD	RADIUS OR RETURN AIR DUCT
RCP	REFLECTED CEILING PLAN
RD	ROOF DRAIN
RE	REFER TO
REF	REFERENCE
REFL	REFLECTED
REINF	REINFORCING (REINFORCED)
REM	REMARK OR REMOVE
REQ'D	REQUIRED
RET	RETAINING
REV	REVERSE OR REVISED
RH	RIGHT HAND
RM	ROOM
RO	ROUGH OPENING
RPM	REVOLUTIONS PER MINUTE
RPZ	REDUCED PRESSURE PRINCIPAL BACKFLOW PREVENTER
RTU	ROOF TOP UNIT

S

S	SOUTH
SA	SUPPLY AIR
SAN	SANITARY
SAT	SUSPENDED ACOUSTICAL TILE
SC	SCALE
SCH	SCHEDULE
SCW	SOLID CORE WOOD
SD	SMOKE DAMPER OR STORM DRAIN
SECT	SECTION
SF	SUPPLY FAN OR SQUARE FEET
SGFT	STRUCTURAL GLAZED FACING TILE
SH	SPRINKLER HEAD
SHT	SHEET
SIM	SIMILAR
SJ	SAWED JOINT
SM	SPRINKLER MAIN
SMACNA	SHEET METAL AND AIR CONDITIONING CONTRACTORS NATIONAL ASSOCIATION
SPC	SPACE
SPEC	SPECIFICATION
SPEC'D	SPECIFIED
SQ	SQUARE
SS	SERVICE SINK OR SANITARY SEWER
SSM	SOLID SURFACE MATERIAL

S

SHT	SHEET
SIM	SIMILAR
SJ	SAWED JOINT
SM	SPRINKLER MAIN
SMACNA	SHEET METAL AND AIR CONDITIONING CONTRACTORS NATIONAL ASSOCIATION
SPC	SPACE
SPEC	SPECIFICATION
SPEC'D	SPECIFIED
SQ	SQUARE

SSMH	SANITARY SEWER MANHOLE
SSTL	STAINLESS STEEL
STA	STATION
STD	STANDARD
STIFF	STIFFENER
STIR	STIRRUP
STL	STEEL
STOR	STORAGE
STR	STRUCTURAL
SUPT	SUPPORT
SUSP	SUSPENDED
SV	SHEET VINYL
SVC	SERVICE
SW	SWITCH
SYM	SYMMETRICAL

T

T	THICKNESS OR TREAD
TAS	TEXAS ACCESSIBILITY STANDARDS
T&B	TOP AND BOTTOM
TC	TOP OF CURB
TEL	TELEPHONE
TEMP	TEMPERATURE OR TEMPORARY
TH	THRESHOLD
THRU	THROUGH
THR'D	THREADED
TLT	TOILET
TOC	TOP OF CONCRETE
TOS	TOP OF STEEL
TOT	TOTAL
TOW	TOP OF WALL
TP	TOILET PARTITION
TRANS	TRANSVERSE OR TRANSITION
TS	TUBE STEEL
T-STAT	THERMOSTAT
TTD	TOILET TISSUE DISPENSER
TYP	TYPICAL

U

U/G	UNDERGROUND
UL	UNDERWRITERS LABORATORY INC.
UNO	UNLESS OTHERWISE NOTED
UR	URINAL

V

V	VENT OR VOLT
VAC	VACUUM
VB	VINYL BASE
VCT	VINYL COMPOSITION TILE
VERT	VERTICAL
VEST	VESTIBULE
VF	VENTILATION FAN
VIF	VERIFY IN FIELD
VOL	VOLUME
VTR	VENT THROUGH ROOF
VWC	VINYL WALL COVERING
VWF	VINYL WALL FABRIC

W

W	WIDTH, WASTE OR WEST
W/	WITH
W/O	WITHOUT
WC	WATER CLOSET
WD	WOOD
WDW	WINDOW
WH	WATER HEATER OR WALL HYDRANT
WP	WEATHERPROOF OR WORKING POINT
WPFG	WATERPROOFING
WPL	WATERPROOF LOUVER
WS	WATER STOP
WSCT	WAINSCOT
WT	WEIGHT
WV	WATER VALVE
WWF	WELDED WIRE FABRIC
WWM	WELDED WIRE MESH

GENERAL SYMBOLS

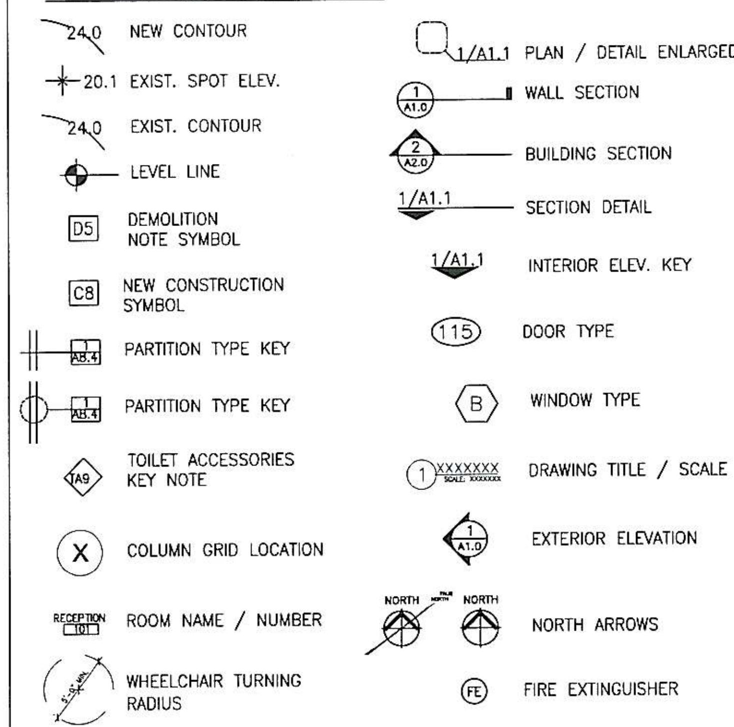

ARCHITECTURAL SYMBOLS

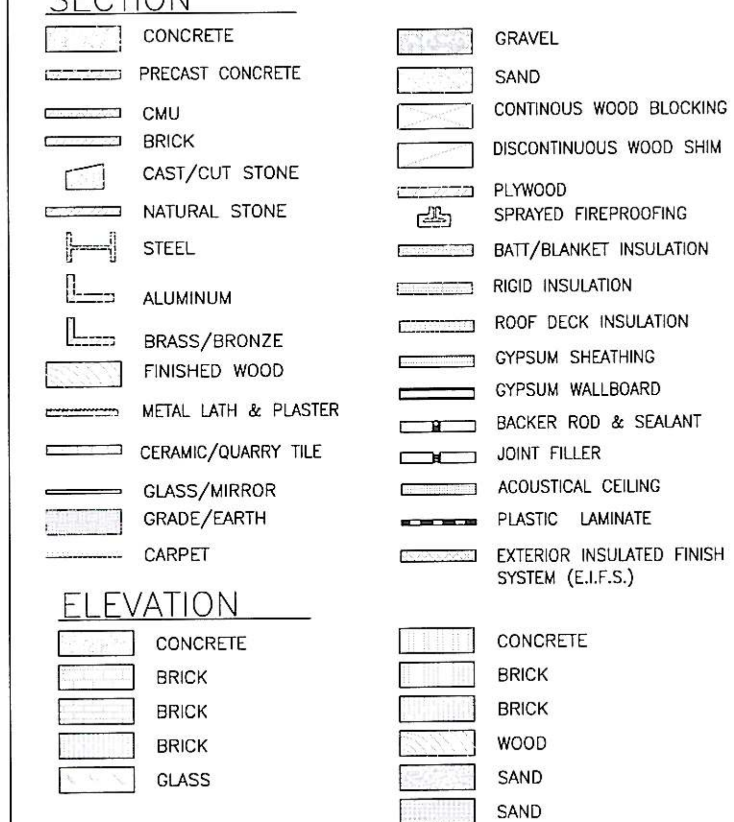

Texas Department of Transportation
125 E. 11th Street
Austin, Texas 78701-2483
(512) 416-3048

Copyright © 2005 Texas Department of Transportation

THIS DOCUMENT IS RELEASED FOR THE PURPOSE OF
INTERIM REVIEW
UNDER THE AUTHORITY OF:
Karl Oberlander
Texas Registration No. 7970
12-13-2005

THIS DRAWING SHALL NOT BE USED FOR CONSTRUCTION, BIDDING, OR PERMIT PURPOSES.

BELTON AREA ENGINEER AND MAINTENANCE FACILITY

BELTON, BELL COUNTY
WACO DISTRICT

Revisions

Drawn by:
–

Project No.
CBC4704-00668

Date
05.01.2006

Sheet No.
G1.1

of sheets

ABBREVIATIONS / SYMBOLS

NOTE: THIS DRAWING WAS CREATED FOR PRODUCTION ON 22" x 34" SHEET SIZE. DO NOT SCALE PRINTS.

CADFILE: T:\MNTFMD09WACI\CBC4704-00-668109-77-47040066B\Acad\Arch\0668_G1_1.dwg Plotted: Thu. Jul. 13, 2006 @ 1:23 PM By: EPURCEL

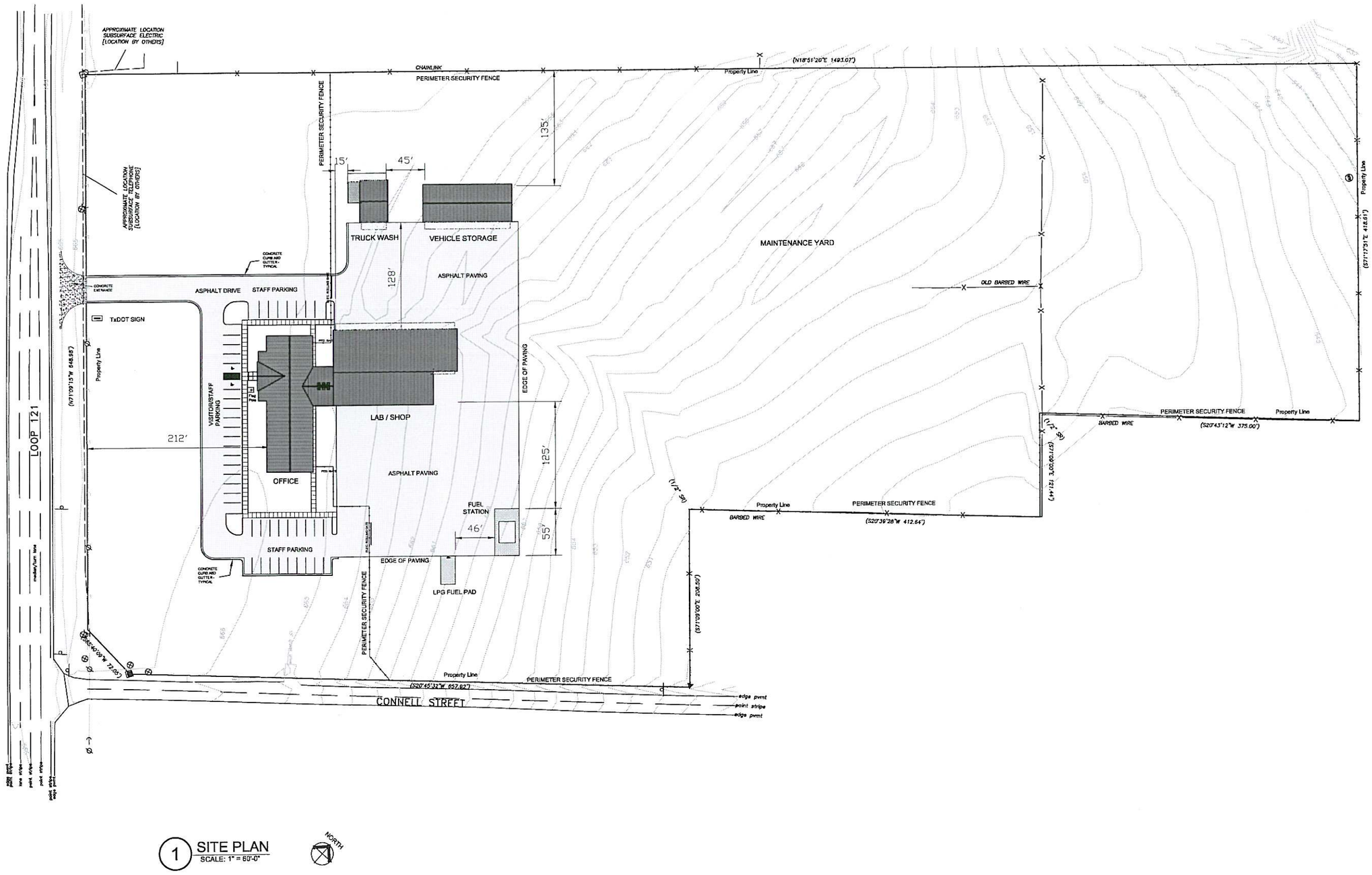

1 SITE PLAN
SCALE: 1" = 60'-0"

NORTH

SITE PLAN

NOTE: THIS DRAWING WAS CREATED FOR PRODUCTION ON 22" x 34" SHEET SIZE. DO NOT SCALE PRINTS.

CADFILE: T:\MNTFM\DDS\WACO\CBC4704-00-668\09-77-4704\00668\Acad\Arch\00668_A1_1.dwg Plotted: Mon, Jul 17, 2006 @ 3:54 PM By: kobenta

Texas Department of Transportation
125 E. 11th Street
Austin, Texas 78701-2483
(512) 416-3048

Copyright © 2005 Texas Department of Transportation

THIS DOCUMENT IS RELEASED FOR THE PURPOSE OF
INTERIM REVIEW
UNDER THE AUTHORITY OF:
Kari Cleveland
Texas No. 93200
Date: 7/17/06

THIS DRAWING SHALL NOT BE USED FOR CONSTRUCTION, BIDDING, OR PERMIT PURPOSES.

BELTON AREA ENGINEER AND MAINTENANCE FACILITY

BELTON, BELL COUNTY
WACO DISTRICT

Revisions

Drawn by:
KAO
Project No.
CBC4704-00668
Date
05.01.2006
Sheet No.

A1.1
of sheets

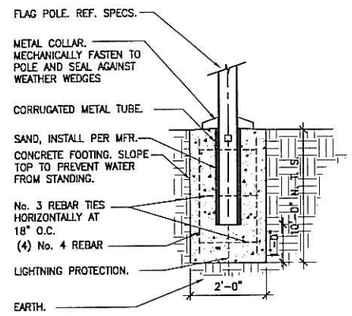

9 FLAG POLE BASE
SCALE: 1/2" = 1'-0"

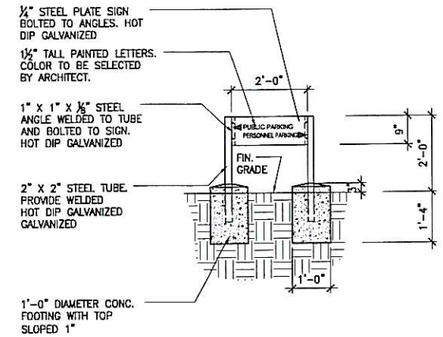

6 ENTRY SIGN ELEVATION
SCALE: 1/2" = 1'-0"

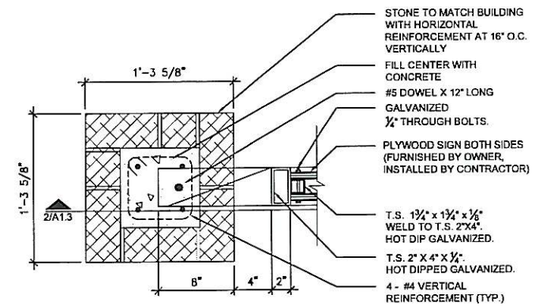

3 SIGN PLAN VIEW
SCALE: 1/2" = 1'-0"

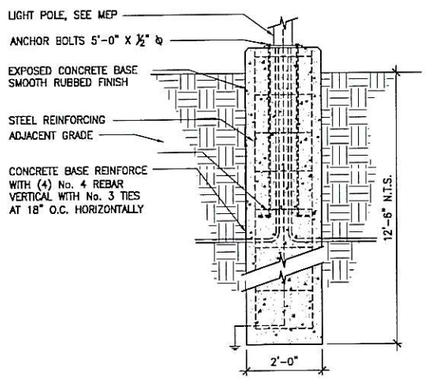

11 LIGHT POLE BASE
SCALE: 1/2" = 1'-0"

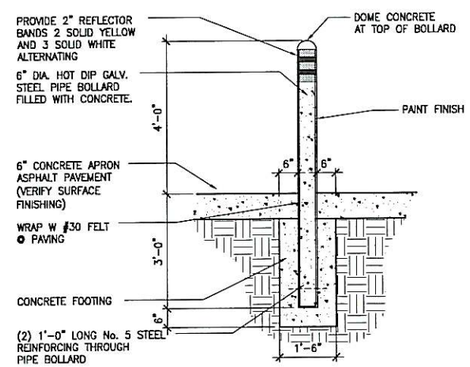

8 BOLLARD DETAIL
SCALE: 1/2" = 1'-0"

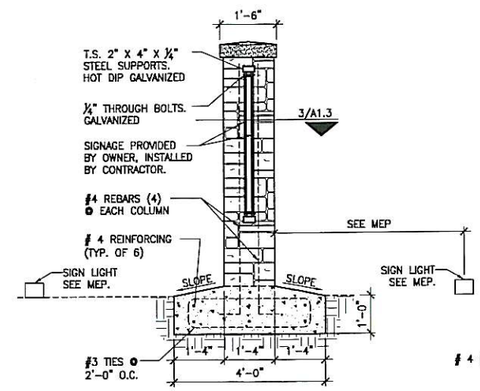

5 SIGN SECTION
SCALE: 1/2" = 1'-0"

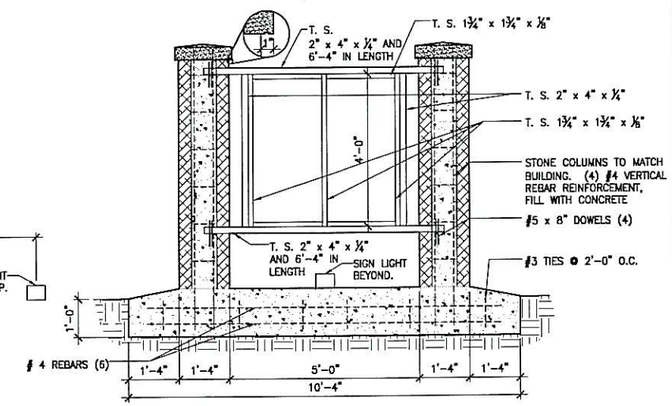

2 SIGN SECTION
SCALE: 1/2" = 1'-0"

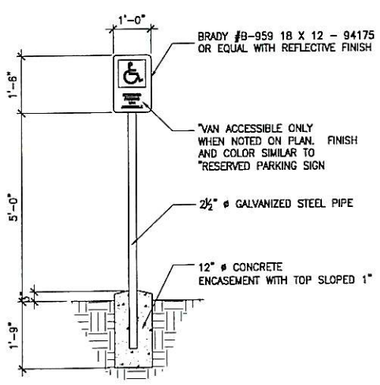

10 ACCESSIBLE SIGN
SCALE: 1/2" = 1'-0"

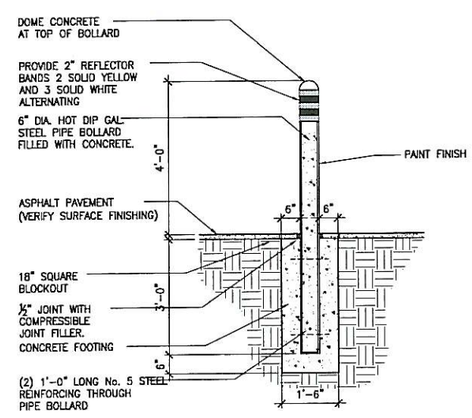

7 BOLLARD DETAIL
SCALE: 1/2" = 1'-0"

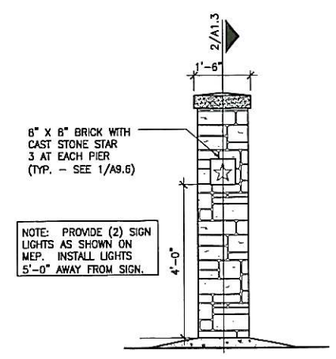

4 SIGN ELEVATION
SCALE: 1/2" = 1'-0"

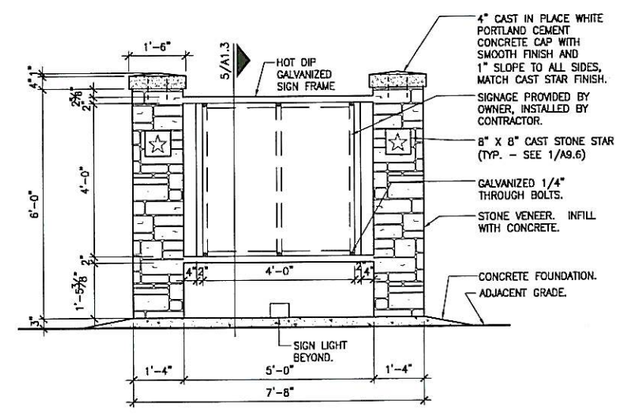

1 SIGN ELEVATION
SCALE: 1/2" = 1'-0"

SITE DETAILS

NOTE: THIS DRAWING WAS CREATED FOR PRODUCTION ON 22" x 34" SHEET SIZE. DO NOT SCALE PRINTS.

Texas Department of Transportation
125 E. 11th Street
Austin, Texas 78701-2483
(512) 416-3048
Copyright © 2003 Texas Department of Transportation

THIS DOCUMENT IS RELEASED FOR THE PURPOSE OF INTERIM REVIEW UNDER THE AUTHORITY OF: Sal Gonzalez Texas Registration No. 72973 13-12-2005
THIS DRAWING SHALL NOT BE USED FOR CONSTRUCTION, BIDDING, OR PERMIT PURPOSES.

BELTON AREA ENGINEER AND MAINTENANCE FACILITY
BELTON, BELL COUNTY
WACO DISTRICT

Revisions

Drawn by: JOT
Project No. CBC4704-00668
Date 05.01.2006
Sheet No.
A1.3
of sheets

CADFILE: T:\MNTFM\D09WACI\CBC4704-00-668\09-77-4704\0668\Acad\Arch\0668_A1_3.dwg Plotted: Mon, Jul. 17, 2006 @ 4:28 PM By: RDURAN

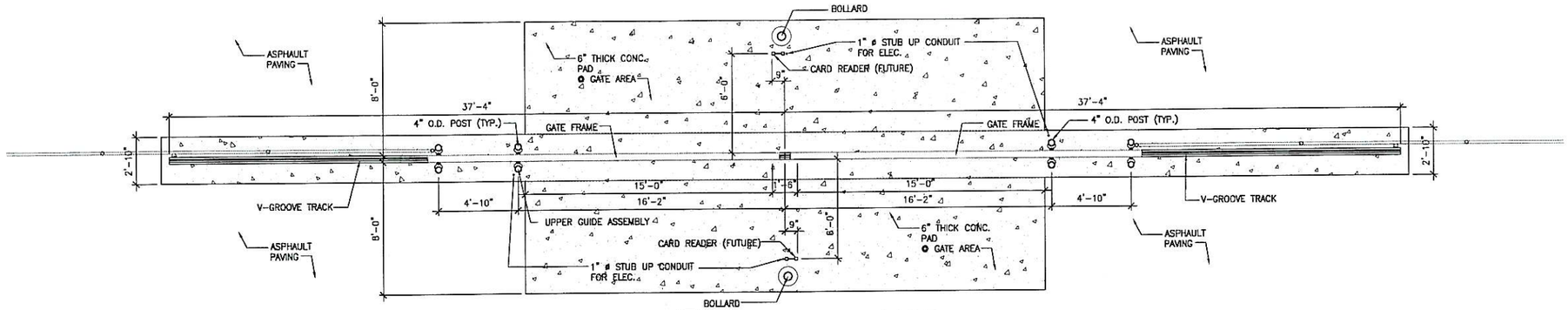

1 PLAN @ SECURITY GATE
SCALE: 1/4" = 1'-0"

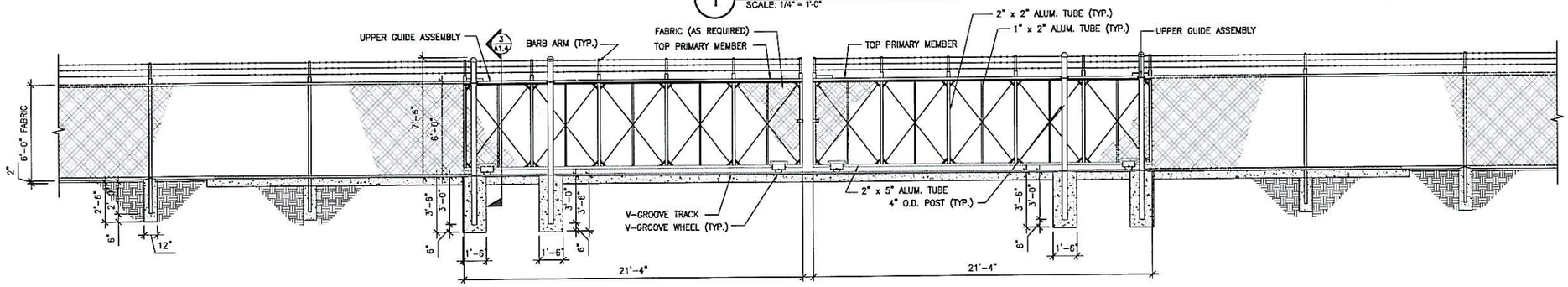

2 STANDARD ROLLING SECURITY GATE
SCALE: 1/4" = 1'-0"

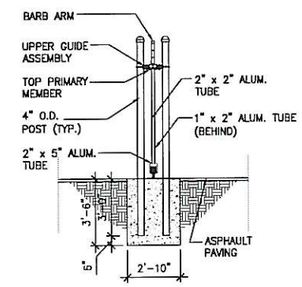

3 GATE SECTION
SCALE: 1/4" = 1'-0"

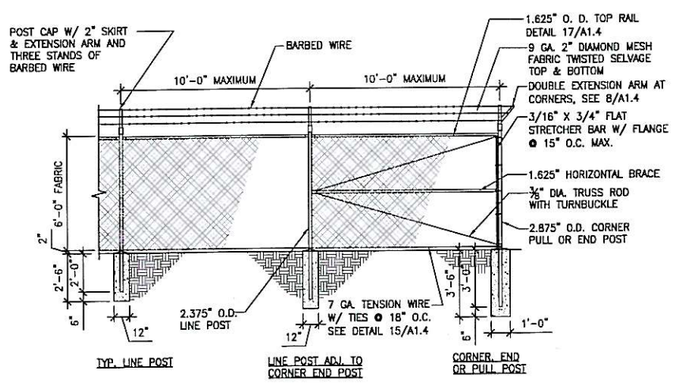

4 SECURITY FENCING WITH BARBED WIRE
SCALE: 1/4" = 1'-0"

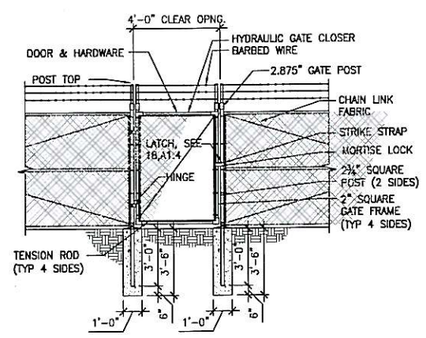

5 WALK GATE
SCALE: 1/4" = 1'-0"

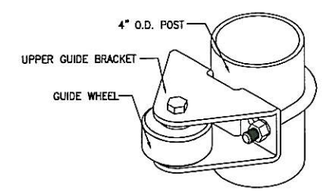

6 UPPER GUIDE ASSEMBLY
SCALE: 1/2" = 1'-0"

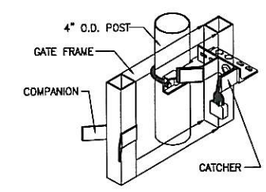

7 CATCH ASSEMBLY
SCALE: 1/2" = 1'-0"

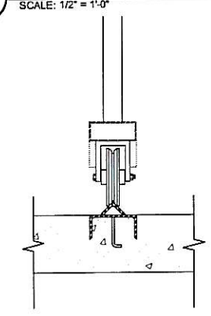

8 V-GROOVE WHEEL ASSEMBLY
SCALE: 1/2" = 1'-0"

GATE & FENCE DETAILS

NOTE: THIS DRAWING WAS CREATED FOR PRODUCTION ON 22" x 34" SHEET SIZE. DO NOT SCALE PRINTS.

Texas Department of Transportation
125 E. 11th Street
Austin, Texas 78701-2483
(512) 416-3048
Copyright © 2005 Texas Department of Transportation

THIS DOCUMENT IS RELEASED FOR THE PURPOSE OF INTERIM REVIEW
UNDER THE AUTHORITY OF:
Texas Registration No. 7873
Sal Chavez
13-13-2005
THIS DRAWING SHALL NOT BE USED FOR CONSTRUCTION, BIDDING, OR PERMIT PURPOSES.

BELTON AREA ENGINEER AND MAINTENANCE FACILITY
BELTON, BELL COUNTY
WACO DISTRICT

Revisions

Drawn by: ESP
Project No. CBC4704-00668
Date 05.01.2006
Sheet No.
A1.4
of sheets

CADFILE: T:\MNTFMD09WACI\CBC4704-00-668\09-77-4704006681\cad\Arch\0668_A1_4.dwg Plotted: Thu, Jul 13, 2006 @ 2:02 PM By: EPURCEL

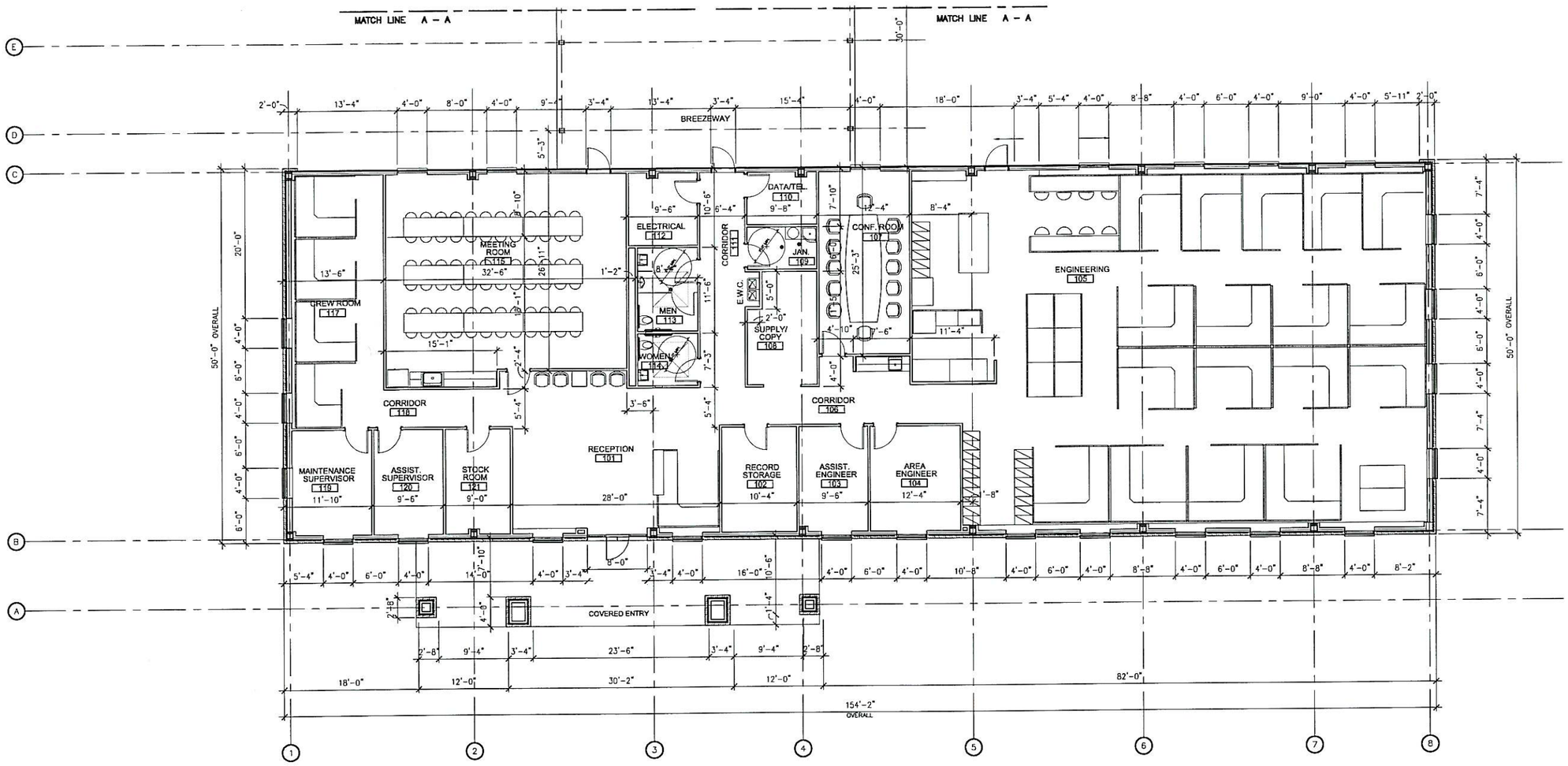

1 FLOOR PLAN - OFFICE BUILDING
SCALE: 1/8" = 1'-0"

0' 5' 10' 15' 20' 25'

NORTH

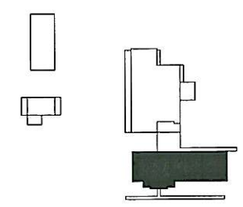

KEY PLAN

FLOOR PLAN - OFFICE

NOTE: THIS DRAWING WAS CREATED FOR PRODUCTION ON 22" x 34" SHEET SIZE. DO NOT SCALE PRINTS.

Texas Department of Transportation
125 E. 11th Street
Austin, Texas 78701-2483
(512) 416-3048
Copyright © 2005 Texas Department of Transportation

THIS DOCUMENT IS RELEASED FOR THE PURPOSE OF
INTERIM REVIEW
UNDER THE AUTHORITY OF:
Kyle Chandler
Texas 78701-2483
15-13-2005
THIS DRAWING SHALL NOT BE USED FOR CONSTRUCTION, BIDDING, OR PERMIT PURPOSES.

BELTON AREA ENGINEER AND MAINTENANCE FACILITY

BELTON, BELL COUNTY
WACO DISTRICT

Revisions

Drawn by: KAO
Project No. CBC4704-00668
Date 05.01.2006
Sheet No.

A2.1
of sheets

CADFILE: T:\MNTFM\D09WAC\CBC4704-00-668\09-77-4704\00668\Acad\Arch\0668_A2_1-3.dwg Plotted: Fri, Jul. 14, 2006 @ 9:33 AM By: EPURCEL

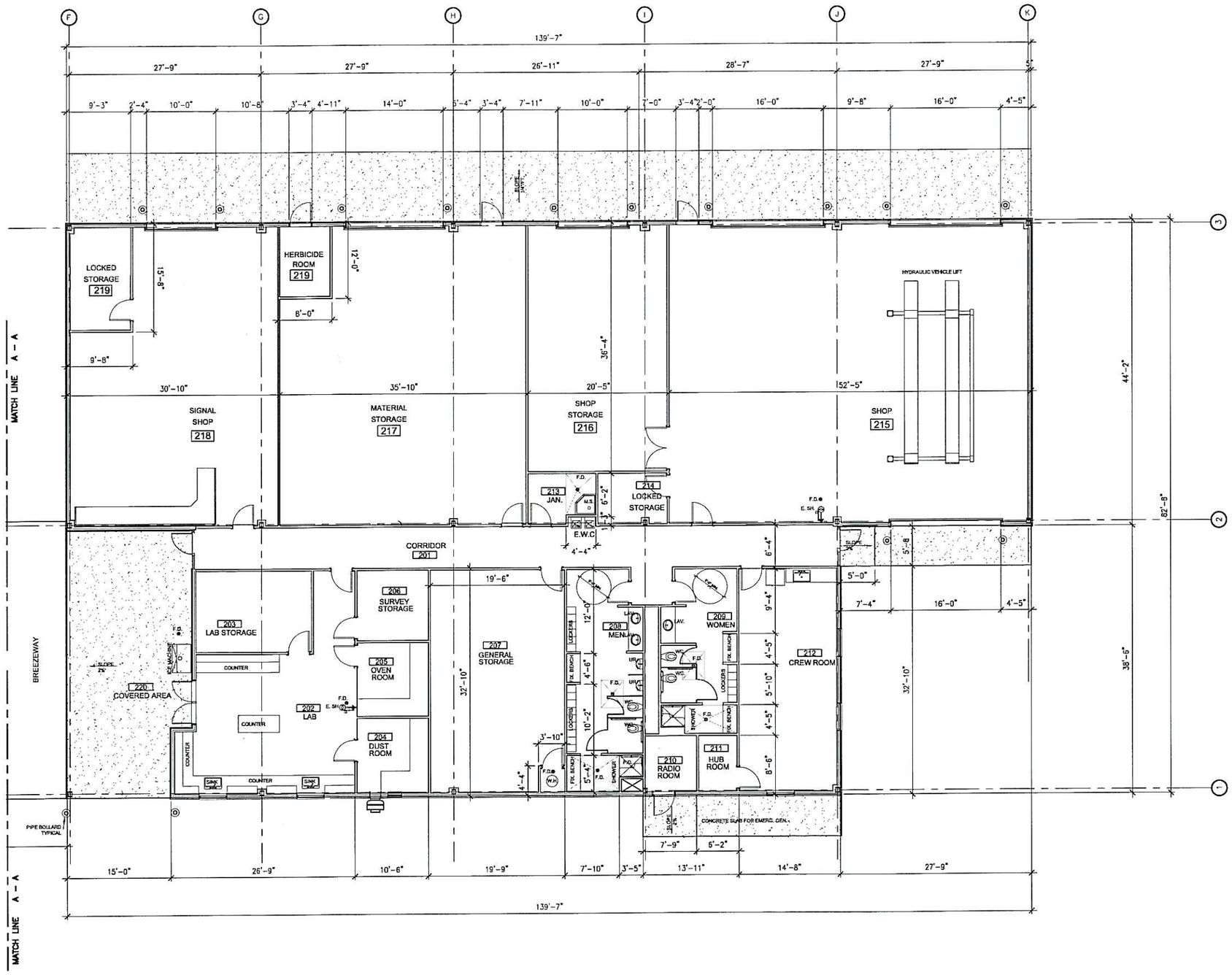

1 FLOOR PLAN - LAB / SHOP BUILDING
SCALE: 1/8" = 1'-0"

0' 5' 10' 15' 20' 25'

NORTH

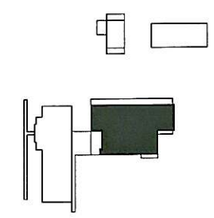

KEY PLAN

FLOOR PLAN - LAB / SHOP

NOTE: THIS DRAWING WAS CREATED FOR PRODUCTION ON 22" x 34" SHEET SIZE. DO NOT SCALE PRINTS.

Texas Department of Transportation
125 E. 11th Street
Austin, Texas 78701-2483
(512) 416-3048

Copyright © 2005 Texas Department of Transportation

THIS DOCUMENT IS RELEASED FOR THE PURPOSE OF
INTERIM REVIEW
UNDER THE AUTHORITY OF:
Karl Chaplinski
Texas Registration No. 7223
10-19-2005

THIS DRAWING SHALL NOT BE USED FOR CONSTRUCTION, BIDDING, OR PERMIT PURPOSES.

BELTON AREA ENGINEER AND MAINTENANCE FACILITY

BELTON, BELL COUNTY
WACO DISTRICT

Revisions

Drawn by: KAO
Project No. CBC4704-00668
Date 05.01.2006
Sheet No.

A2.2
of sheets

CADFILE: T:\MNTF\MD09\WAC\CBC4704-00-668\09-77-4704\00668\Acad\Arch\00668_A2_1-3.dwg Plotted: Fri, Jul, 14, 2006 @ 11:08 AM By: EPURCEL

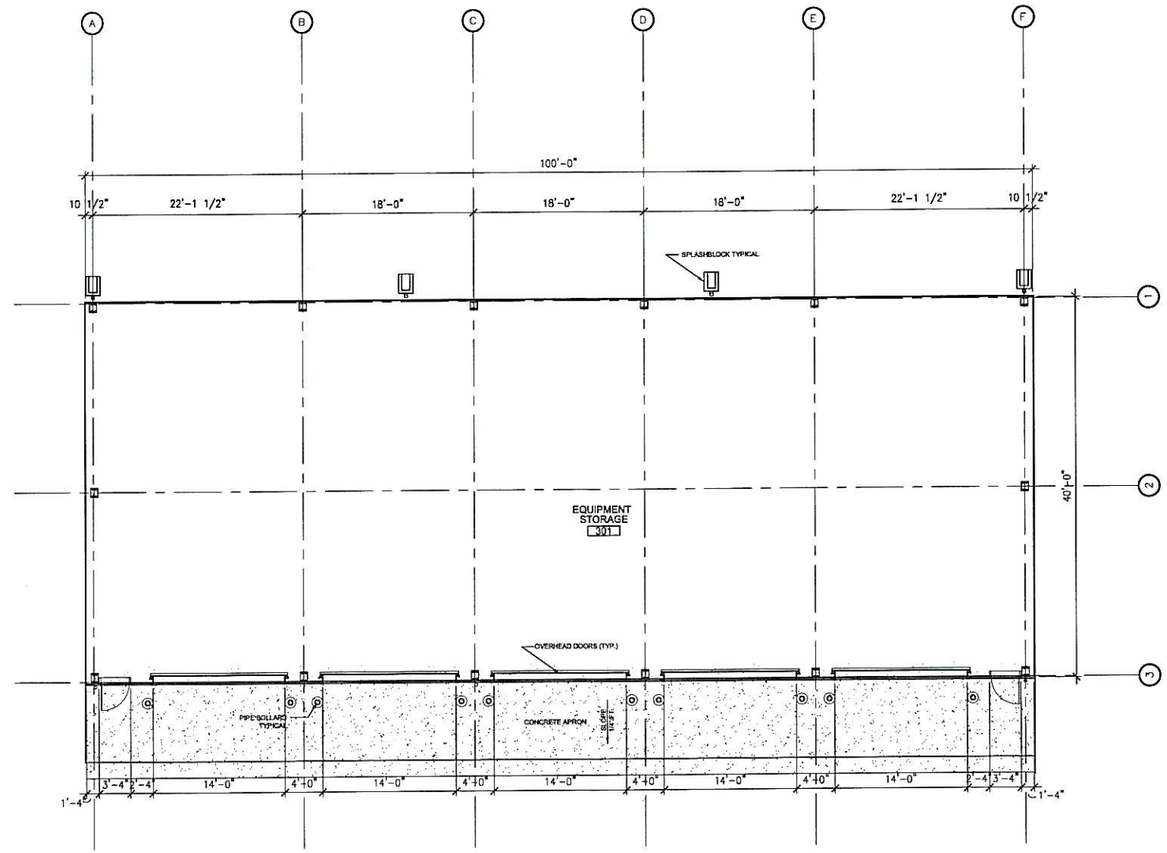

1 FLOOR PLAN - VEHICLE STORAGE BUILDING
SCALE: 1/8" = 1'-0"

0' 5' 10' 15' 20' 25'

NORTH

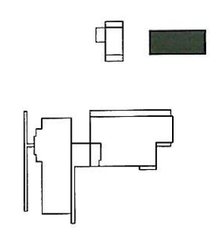

KEY PLAN

FLOOR PLAN - VEHICLE STORAGE

NOTE: THIS DRAWING WAS CREATED FOR PRODUCTION ON 22" x 34" SHEET SIZE. DO NOT SCALE PRINTS.

Texas Department of Transportation
125 E. 11th Street
Austin, Texas 78701-2483
(512) 416-3048

Copyright © 2005 Texas Department of Transportation

THIS DOCUMENT IS RELEASED FOR THE PURPOSE OF
INTERIM REVIEW
UNDER THE AUTHORITY OF:
Kyle Oberlander
Texas Registration No. 7223
15-13-3208
THIS DRAWING SHALL NOT BE USED FOR CONSTRUCTION, BIDDING, OR PERMIT PURPOSES.

BELTON AREA ENGINEER AND MAINTENANCE FACILITY

BELTON, BELL COUNTY
WACO DISTRICT

Revisions

Drawn by:
KAO
Project No.
CBC4704-00668
Date
05.01.2006
Sheet No.

A2.3
of sheets

CADFILE: T:\INTFMAD\09WACI\CBC4704-00-668\09-77-4T0400668\Acad\Arch\0668_A2_1-3.dwg Plotted: Fri, Jul. 14, 2006 @ 3:10 PM By: EPURCEL

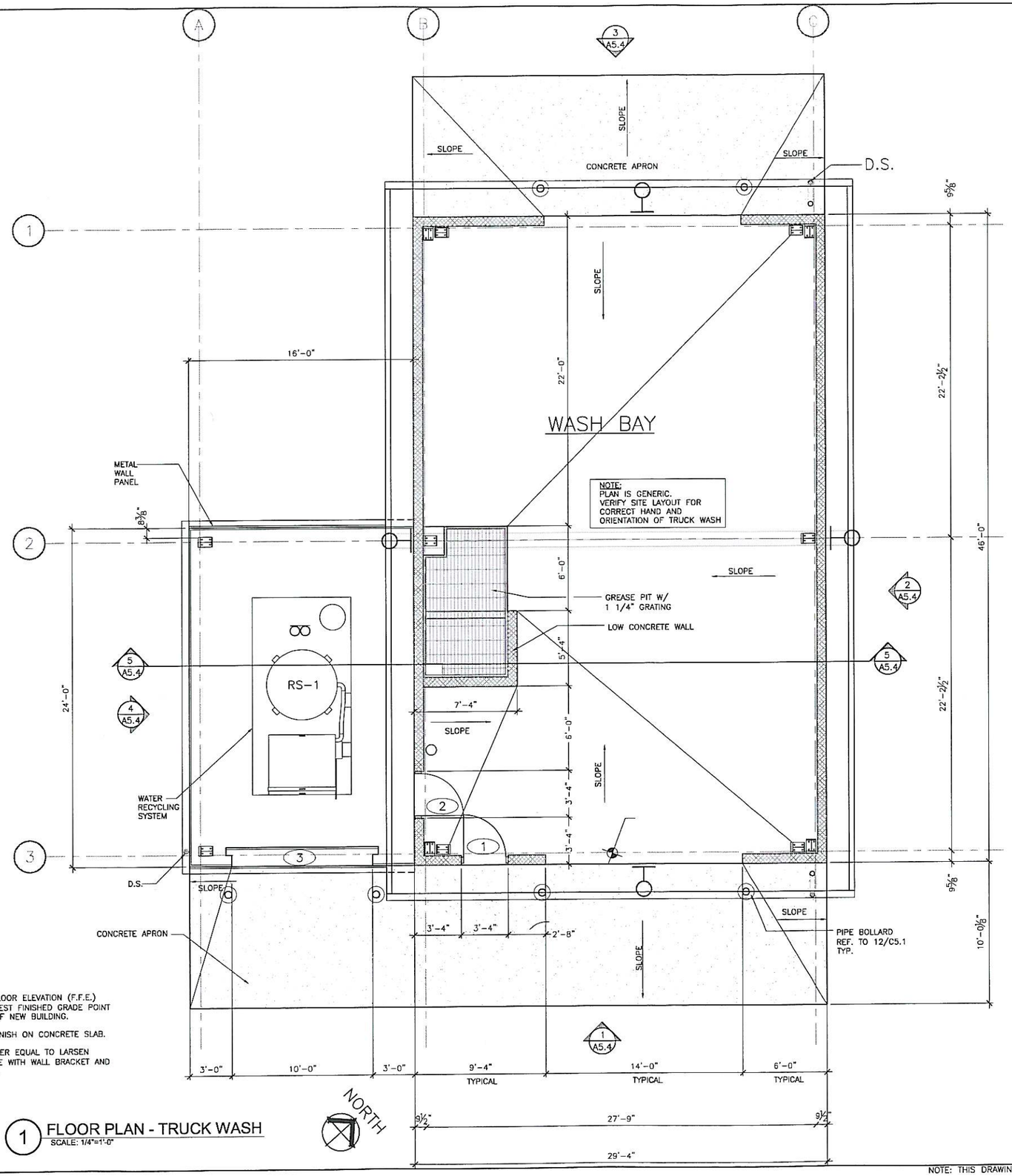

NOTE:
1. SET FINISHED FLOOR ELEVATION (F.F.E.) 12" ABOVE HIGHEST FINISHED GRADE POINT AT PERIMETER OF NEW BUILDING.
2. LIGHT BROOM FINISH ON CONCRETE SLAB.
3. FIRE EXTINGUISHER EQUAL TO LARSEN 'MP10' ABC TYPE WITH WALL BRACKET AND MEETS NFPA 10.

1 FLOOR PLAN - TRUCK WASH
SCALE: 1/4"=1'-0"

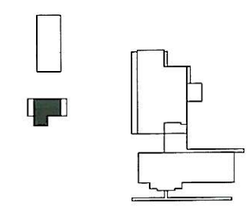

KEY PLAN

FLOOR PLAN - TRUCK WASH

NOTE: THIS DRAWING WAS CREATED FOR PRODUCTION ON 22" x 34" SHEET SIZE. DO NOT SCALE PRINTS.

Texas Department of Transportation
125 E. 11th Street
Austin, Texas 78701-2483
(512) 416-3048

Copyright © 2003 Texas Department of Transportation

THIS DOCUMENT IS RELEASED FOR THE PURPOSE OF
INTERIM REVIEW
UNDER THE AUTHORITY OF:
Karl Gleichmann
Texas #19-00000
19-1-2005
THIS DRAWING SHALL NOT BE USED FOR CONSTRUCTION, BIDDING, OR PERMIT PURPOSES.

BELTON AREA ENGINEER AND MAINTENANCE FACILITY

BELTON, BELL COUNTY
WACO DISTRICT

Revisions

Drawn by:

Project No.
CBC4704-00668
Date
05.01.2006
Sheet No.

A2.4
of sheets

CADFILE: T:\MNTF\MD6\WACI\CBC4704-00-668\09-77-4704\0668\A\cadArch\0668_A2_4.dwg Plotted: Mon, Jul. 17, 2006 @ 10:41 AM By: EPURCEL

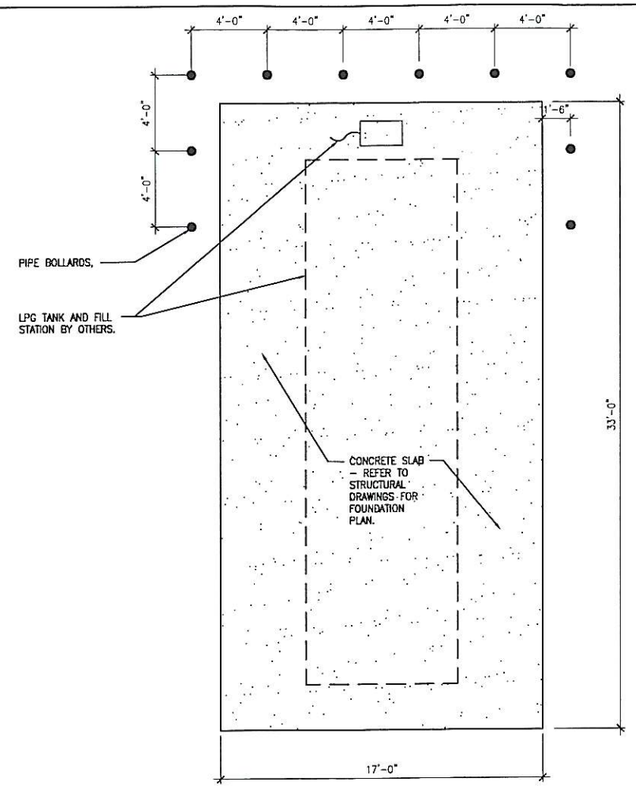

5 PLAN - LPG STORAGE TANK
SCALE: 1/4" = 1'-0"

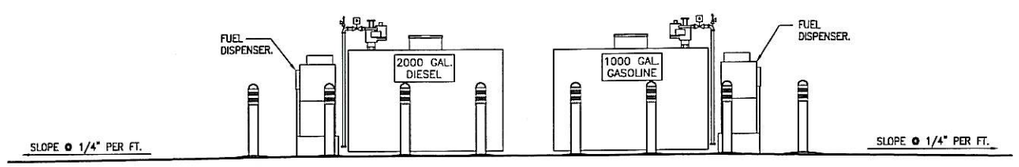

4 ELEVATION
SCALE: 1/4" = 1'-0"

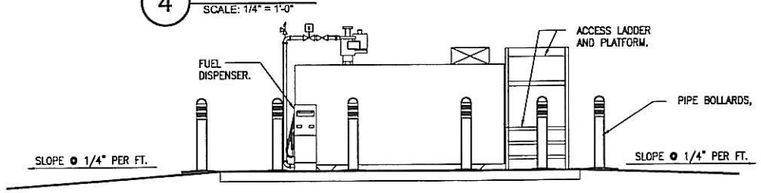

3 ELEVATION
SCALE: 1/4" = 1'-0"

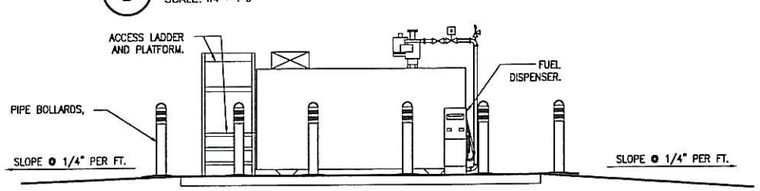

2 ELEVATION
SCALE: 1/4" = 1'-0"

DIMENSIONAL NOTES:

THESE DIMENSIONS SHALL MATCH THE HEIGHT, LENGTH AND WIDTH OF THE ABOVEGROUND STORAGE TANK TO BE INSTALLED.

THESE DIMENSIONS HAVE BEEN DETERMINED AS A FUNCTION OF THE ABOVE GROUND STORAGE TANK HEIGHT. CONTRACTOR SHALL BE RESPONSIBLE FOR MAINTAINING ALL OTHER DIMENSIONS NOT AFFECTED BY TANK HEIGHT, IN CASE A TALLER OR SHORTER TANK IS INSTALLED.

SITE PLAN – GENERAL NOTES

1. PRIOR TO COMMENCEMENT OF CONSTRUCTION ACTIVITIES, THE FINAL ABOVEGROUND STORAGE TANK (AST) & LPG TANK LOCATIONS FOR EACH FACILITY SHALL BE SUBMITTED IN SCHEMATIC FORM TO THE TXDOT DISTRICT PETROLEUM STORAGE TANK (PST) COORDINATOR, TXDOT PROJECT MANAGER AND ENGINEER FOR REVIEW AND APPROVAL. CONTRACTOR SHALL SUBMIT CONSTRUCTION SCHEMATICS THAT INCLUDE ACTUAL TANK DIMENSIONS, ACCESS STAIR LENGTHS, AND ALL OTHER DATA THAT WILL AFFECT THE FINAL OVERALL LENGTH AND WIDTH OF THE PROPOSED AST FUELING SYSTEM.

2. THE AST FUELING SYSTEM LOCATION TO BE SUBMITTED SHALL COMPLY WITH ALL THE CLEARANCE REQUIREMENTS AS ESTABLISHED IN THE APPLICABLE CODES FOR ABOVE GROUND STORAGE TANK FUELING SYSTEMS.

3. THE CONTRACTOR SHALL BE RESPONSIBLE FOR FIELD VERIFYING BOTH HORIZONTAL AND VERTICAL LOCATIONS OF UTILITIES AND MARKING THEIR LOCATIONS BEFORE COMMENCING EXCAVATION OR UNDERGROUND OPERATIONS. ANY DAMAGE TO UTILITIES CAUSED BY THE CONTRACTOR SHALL BE REPAIRED BY THE CONTRACTOR AT NO ADDITIONAL EXPENSE TO THE TEXAS DEPARTMENT OF TRANSPORTATION (TXDOT).

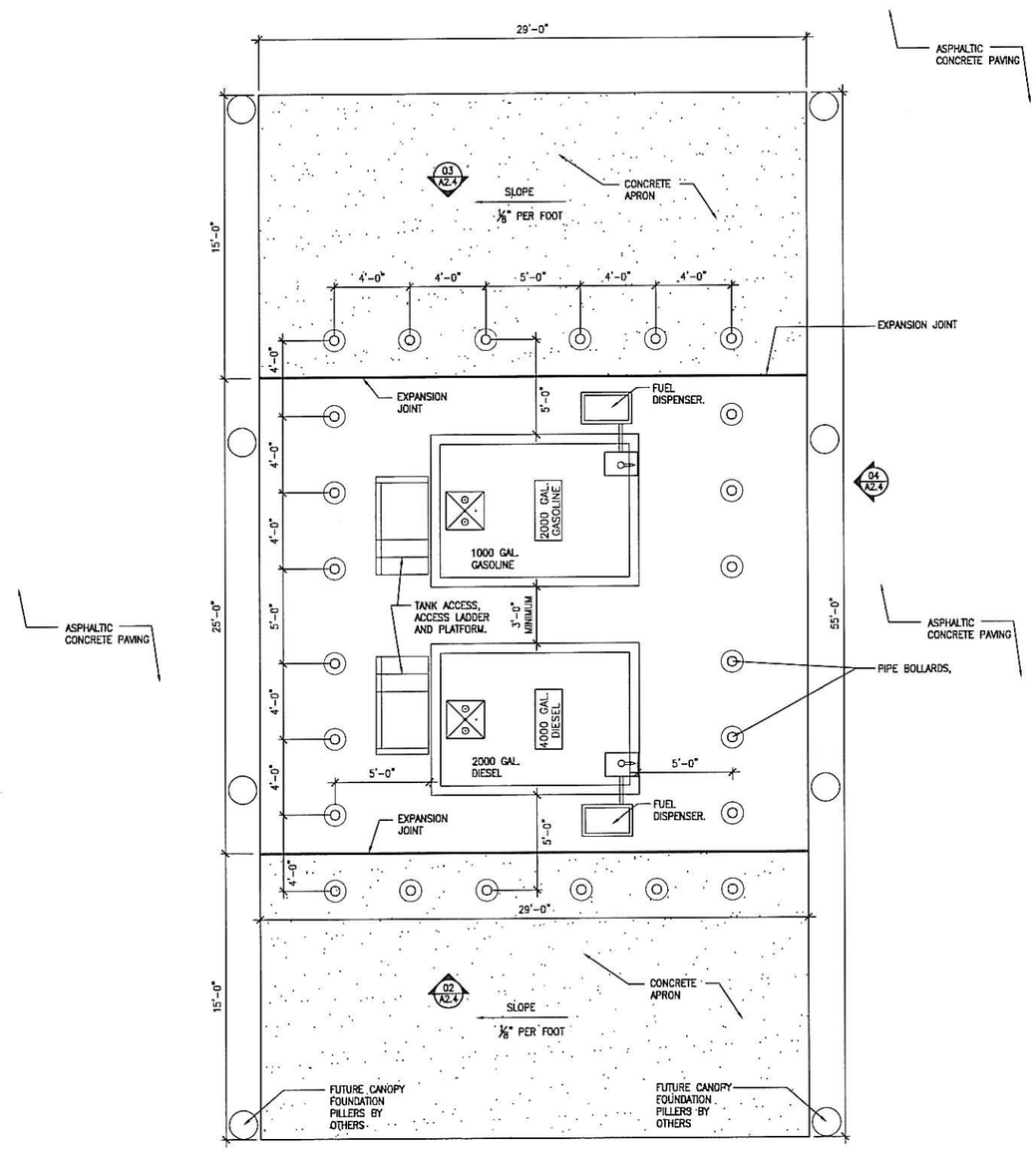

1 PLAN - ABOVE GROUND STORAGE TANKS
SCALE: 1/4" = 1'-0"

FUEL STATION / LPG PLANS & DETAILS

NOTE: THIS DRAWING WAS CREATED FOR PRODUCTION ON 22" x 34" SHEET SIZE. DO NOT SCALE PRINTS.

Texas Department of Transportation
125 E. 11th Street
Austin, Texas 78701-2483
(512) 416-3048
Copyright © 2005 Texas Department of Transportation

THIS DOCUMENT IS RELEASED FOR THE PURPOSE OF
INTERIM REVIEW
UNDER THE AUTHORITY OF:
Karl Osterhoff
Texas Registration No. 7920
12-13-2005
THIS DRAWING SHALL NOT BE USED FOR CONSTRUCTION, BIDDING, OR PERMIT PURPOSES.

BELTON AREA ENGINEER AND MAINTENANCE FACILITY
BELTON, BELL COUNTY
WACO DISTRICT

Revisions

Drawn by: KAO
Project No. CBC4704-00668
Date 05.01.2006
Sheet No.
A2.5
of sheets

CADFILE: T:\MNTFR\ID39WACI\CBC4704-00-668\09-77-4704006681\Acad\Arch\0668_A2_5.dwg Plotted: Mon, Jul 17, 2006 @ 8:53 AM By: EPURCEL

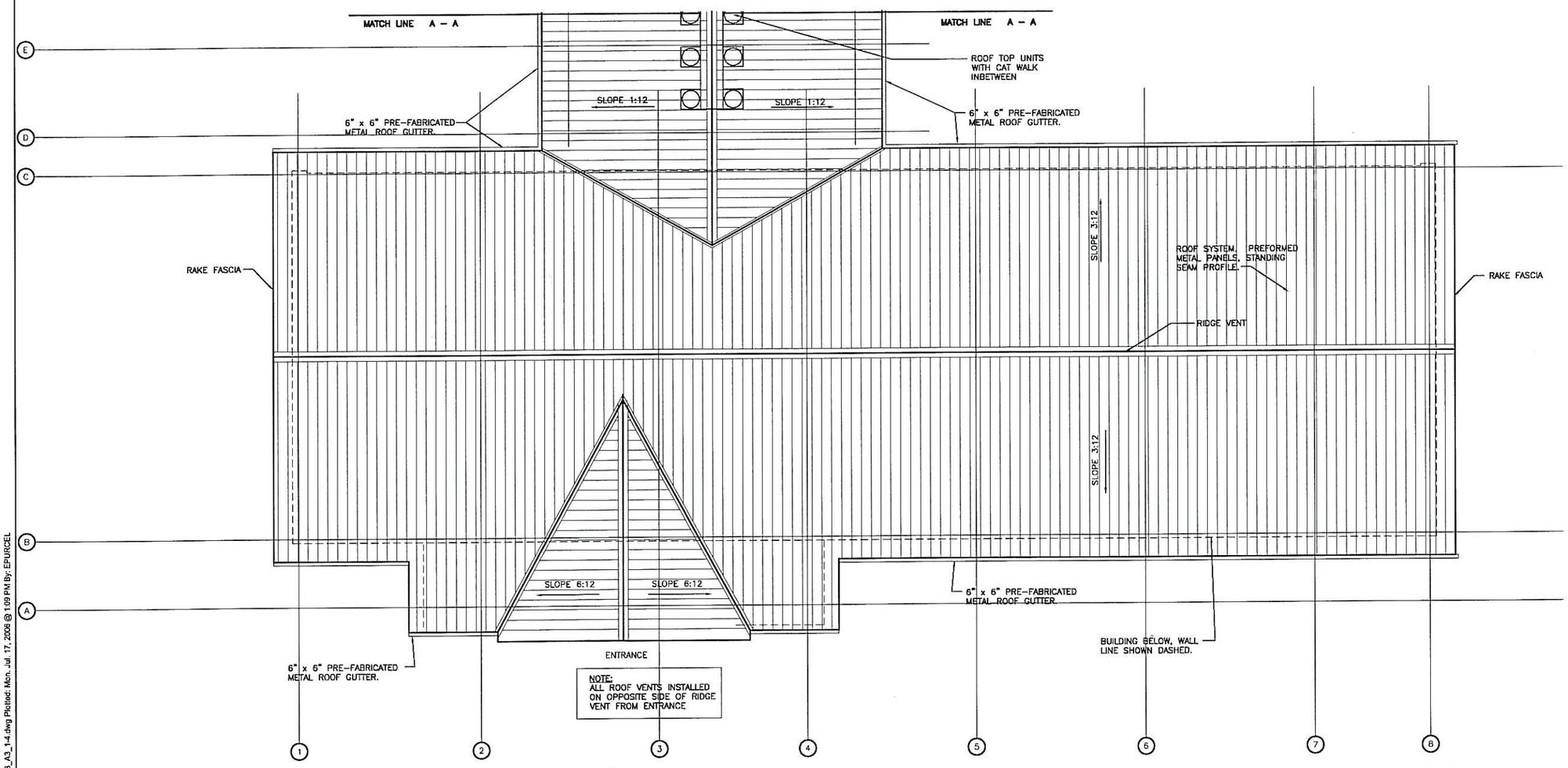

1 ROOF PLAN - OFFICE BUILDING
SCALE: 1/8" = 1'-0"

NORTH

0' 5' 10' 15' 20' 25'

NOTE: VENTS THRU ROOF ARE FOR ARCH. AND MEP COORDINATION. CONTRACTOR SHALL VERIFY LOCATION & QUANTITY W/ MECHANICAL CONTRACTOR

KEY PLAN

ROOF PLAN - OFFICE

NOTE: THIS DRAWING WAS CREATED FOR PRODUCTION ON 22" x 34" SHEET SIZE. DO NOT SCALE PRINTS.

CADFILE: T:\MNTFM\D09WACI\CBC4704-00-668\09-77-470400668\Acad\Arch\0668_A3_1-4.dwg Plotted: Mon, Jul 17, 2006 @ 1:09 PM By: EPURCEL

Texas Department of Transportation
125 E. 11th Street
Austin, Texas 78701-2483
(512) 416-3048
Copyright © 2005 Texas Department of Transportation

THIS DOCUMENT IS RELEASED FOR THE PURPOSE OF
INTERIM REVIEW
UNDER THE AUTHORITY OF:
Earl Overstreet
Texas Registration No. 19703
05-15-2006
THIS DRAWING SHALL NOT BE USED FOR CONSTRUCTION, BIDDING, OR PERMIT PURPOSES.

BELTON AREA ENGINEER AND MAINTENANCE FACILITY

BELTON, BELL COUNTY
WACO DISTRICT

Revisions

Drawn by:
JOT
Project No.
CBC4704-00668
Date
05.01.2006
Sheet No.
A3.1
of sheets

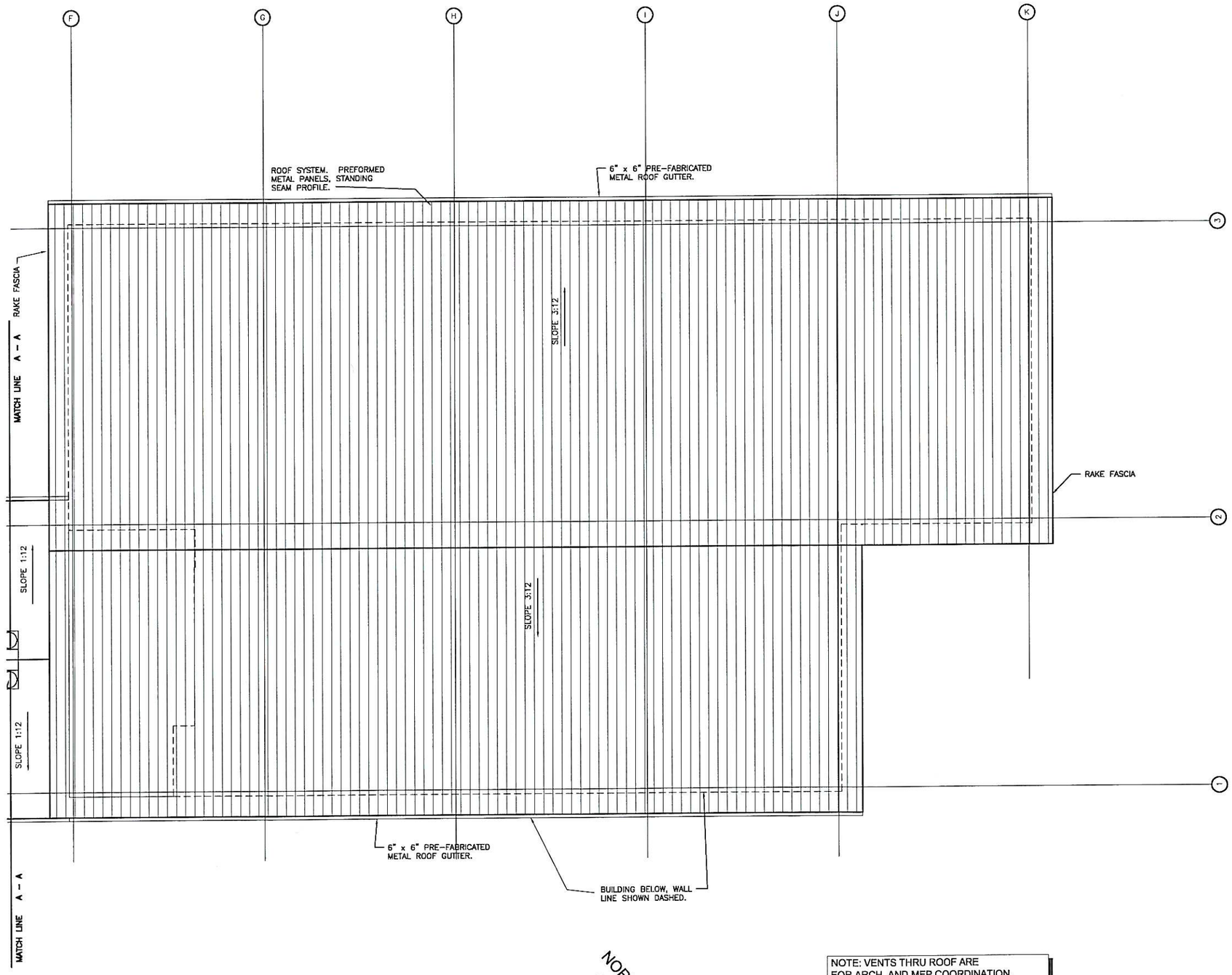

1 ROOF PLAN - SHOP/LAB BUILDING
SCALE: 1/8" = 1'-0"
0' 5' 10' 15' 20' 25'

NORTH

NOTE: VENTS THRU ROOF ARE FOR ARCH. AND MEP COORDINATION. CONTRACTOR SHALL VERIFY LOCATION & QUANTITY W/ MECHANICAL CONTRACTOR

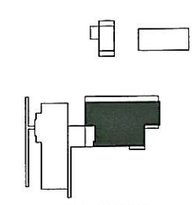

KEY PLAN

ROOF PLAN - LAB/SHOP

NOTE: THIS DRAWING WAS CREATED FOR PRODUCTION ON 22" x 34" SHEET SIZE. DO NOT SCALE PRINTS.

Texas Department of Transportation
125 E. 11th Street
Austin, Texas 78701-2483
(512) 416-3048

Copyright © 2005 Texas Department of Transportation

THIS DOCUMENT IS RELEASED FOR THE PURPOSE OF INTERIM REVIEW
UNDER THE AUTHORITY OF:
Kal Oberkotter
Texas Registration No. 7213
15-13-2005
THIS DRAWING SHALL NOT BE USED FOR CONSTRUCTION, BIDDING, OR PERMIT PURPOSES.

BELTON AREA ENGINEER AND MAINTENANCE FACILITY
BELTON, BELL COUNTY
WACO DISTRICT

Revisions

Drawn by: KAO
Project No. CBC4704-00668
Date 05.01.2006
Sheet No.
A3.2
of sheets

CADFILE: T:\MNTF\WD\09WA\C\CBC4704-00-668\09-77-4704\00668\Acad\Arch\0668_A3_1-4.dwg Plotted: Mon, Jul. 17, 2006 @ 1:08 PM By: EPURCEL

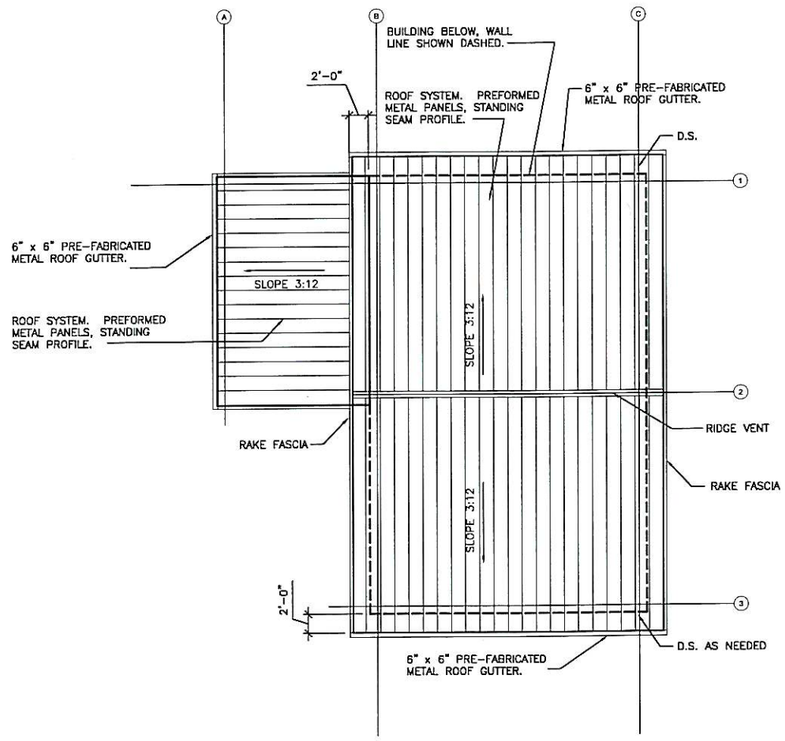

1 ROOF PLAN - TRUCK WASH
SCALE: 1/8" = 1'-0"

0' 5' 10' 15' 20' 25'

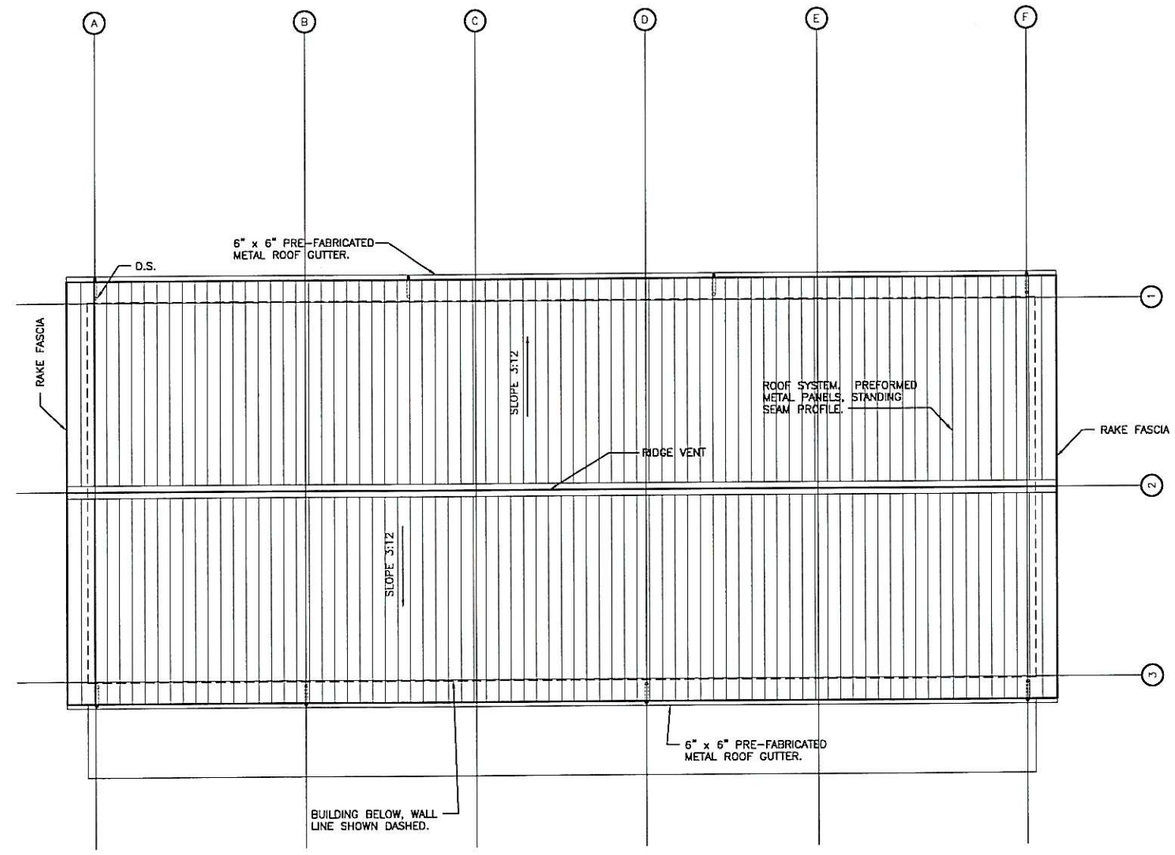

2 ROOF PLAN - VEHICLE STORAGE
SCALE: 1/8" = 1'-0"

0' 5' 10' 15' 20' 25'

NORTH

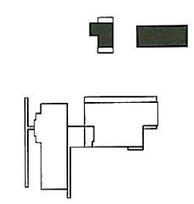

KEY PLAN

NOTE: VENTS THRU ROOF ARE FOR ARCH. AND MEP COORDINATION. CONTRACTOR SHALL VERIFY LOCATION & QUANTITY W/ MECHANICAL CONTRACTOR

ROOF PLAN - TRUCK WASH & VEHICLE STORAGE BUILDINGS

NOTE: THIS DRAWING WAS CREATED FOR PRODUCTION ON 22" x 34" SHEET SIZE. DO NOT SCALE PRINTS.

Texas Department of Transportation
125 E. 11th Street
Austin, Texas 78701-2483
(512) 416-3048
Copyright © 2005 Texas Department of Transportation

THIS DOCUMENT IS RELEASED FOR THE PURPOSE OF INTERIM REVIEW UNDER THE AUTHORITY OF: Kel Osborne, Texas Registration No. 7020, 12-13-2005
THIS DRAWING SHALL NOT BE USED FOR CONSTRUCTION, BIDDING, OR PERMIT PURPOSES.

BELTON AREA ENGINEER AND MAINTENANCE FACILITY
BELTON, BELL COUNTY
WACO DISTRICT

Revisions

Drawn by: KAO
Project No. CBC4704-00668
Date 05.01.2006
Sheet No.
A3.3
of sheets

CADFILE: T:\MNTF\MD09WACI\CBC4704-00-668\09-77-4704-00668\Acad3\rch\0668_A3_1-4.dwg Plotted: Mon. Jul. 17, 2006 @ 1:06 PM By: EPURCEL

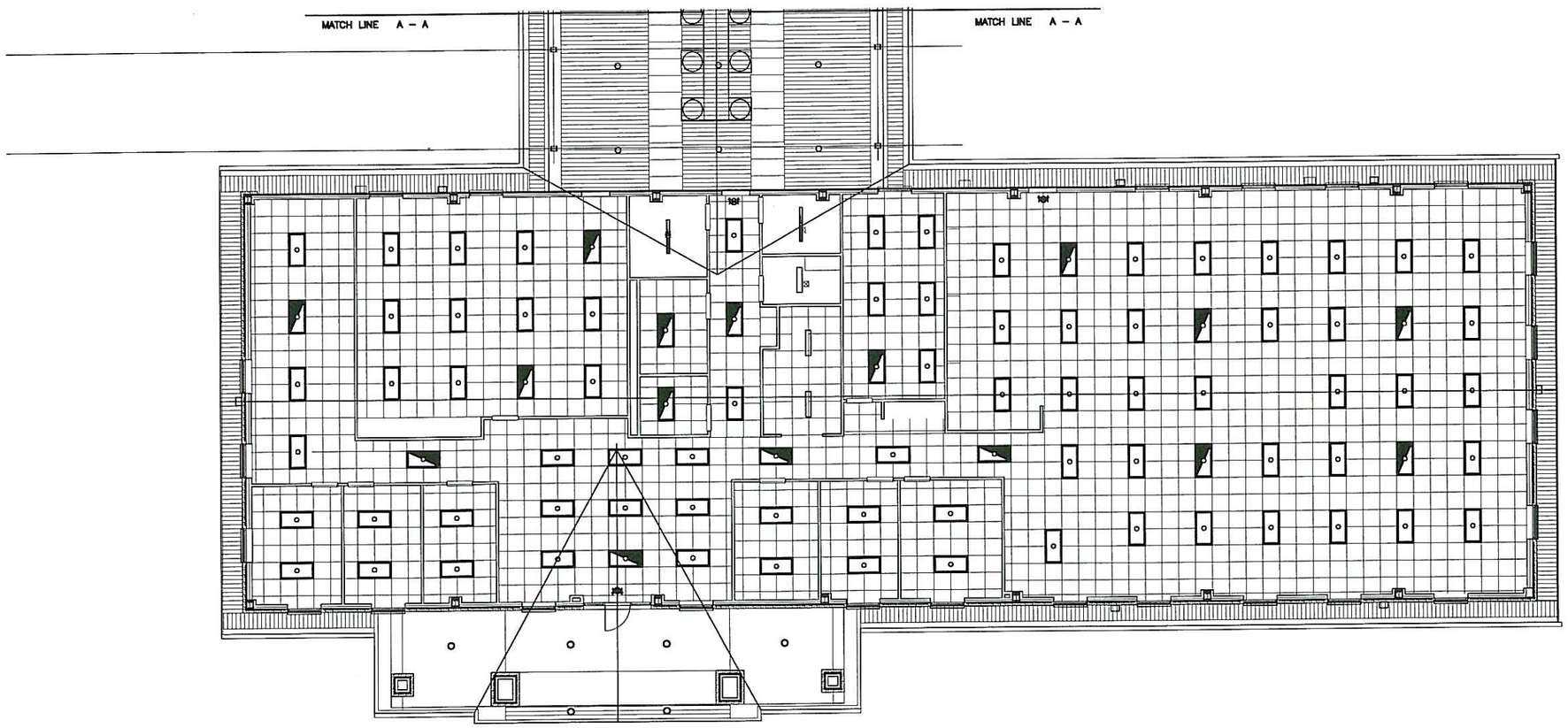

1 REFLECTED CEILING PLAN - OFFICE
SCALE: 1/8" = 1'-0"

NORTH

LEGEND

- 2' X 2' SUSPENDED ACOUSTICAL CEILING GRID
- RETURN AIR DIFFUSER
- SUPPLY AIR DIFFUSER
- LIGHT FIXTURE REF: ELEC.
- EMERGENCY LIGHT FIXTURE REF: ELEC.
- METAL PANEL SOFFIT
- RECESSED LIGHT FIXTURE
- LIGHT FIXTURE REF: ELEC.
- LIGHT FIXTURE REF: ELEC.
- EXHAUST FAN
- EXIT LIGHT
- LIGHT FIXTURE REF: ELEC.
- GYPSUM BOARD CEILING
- CEMENT PLASTER STUCCO

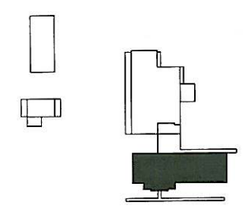

KEY PLAN

REFLECTED CEILING PLAN-OFFICE

NOTE: THIS DRAWING WAS CREATED FOR PRODUCTION ON 22" x 34" SHEET SIZE. DO NOT SCALE PRINTS.

Texas Department of Transportation
125 E. 11th Street
Austin, Texas 78701-2483
(512) 416-3048
Copyright © 2003 Texas Department of Transportation

THIS DOCUMENT IS RELEASED FOR THE PURPOSE OF
INTERIM REVIEW
UNDER THE AUTHORITY OF:
Kyle Osborne
Texas Registration No. 7870
15-12-2005

THIS DRAWING SHALL NOT BE USED FOR CONSTRUCTION, BIDDING, OR PERMIT PURPOSES.

BELTON AREA ENGINEER AND MAINTENANCE FACILITY
BELTON, BELL COUNTY
WACO DISTRICT

Revisions

Drawn by: KAO
Project No. CBC4704-00668
Date 05.01.2006
Sheet No.
A4.1
of sheets

CADFILE: T:\MNTFM\D09WAC\CBC4704-00-668\09-77-4704006681\cad\Arch\0668_A4_1-2.dwg Plotted: Mon, Jul. 17, 2006 @ 4:22 PM By: EPURCEL

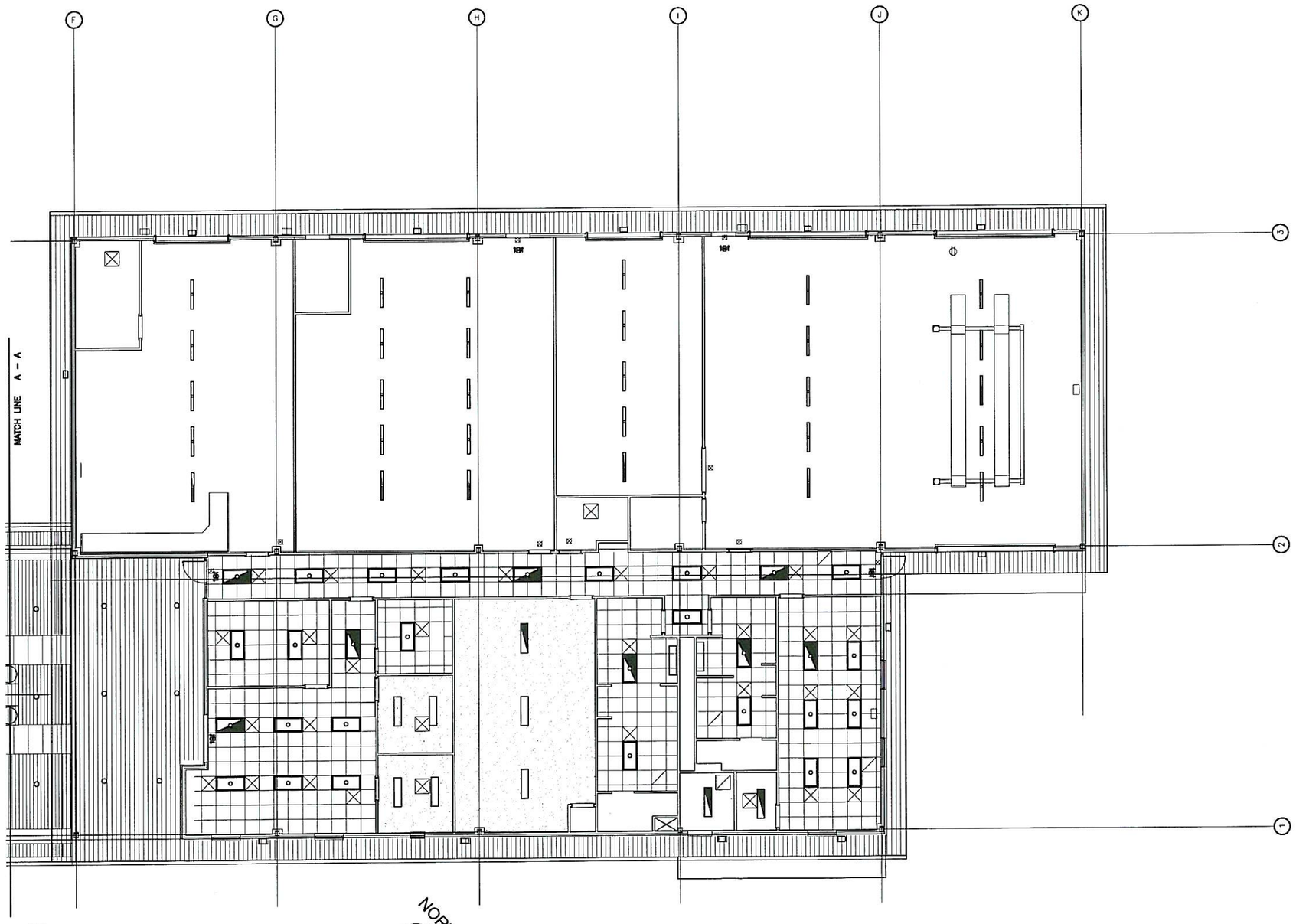

1 REFLECTED CEILING PLAN - SHOP/LAB
SCALE: 1/8" = 1'-0"

NORTH

LEGEND

- 2' X 2' SUSPENDED ACOUSTICAL CEILING GRID
- RETURN AIR DIFFUSER
- SUPPLY AIR DIFFUSER
- LIGHT FIXTURE REF: ELEC.
- EMERGENCY LIGHT FIXTURE REF: ELEC.
- METAL PANEL SOFFIT
- RECESSED LIGHT FIXTURE
- LIGHT FIXTURE REF: ELEC.
- LIGHT FIXTURE REF: ELEC.
- EXHAUST FAN
- EXIT LIGHT
- LIGHT FIXTURE REF: ELEC.
- GYPSUM BOARD CEILING
- CEMENT PLASTER STUCCO

KEY PLAN

REFLECTED CEILING PLAN - LAB/SHOP

NOTE: THIS DRAWING WAS CREATED FOR PRODUCTION ON 22" x 34" SHEET SIZE. DO NOT SCALE PRINTS.

Texas Department of Transportation
125 E. 11th Street
Austin, Texas 78701-2483
(512) 416-3048

Copyright © 2005 Texas Department of Transportation

THIS DOCUMENT IS RELEASED FOR THE PURPOSE OF
INTERIM REVIEW
UNDER THE AUTHORITY OF:
Kell Osborne
Texas Registration No. 1973
12-13-2005

THIS DRAWING SHALL NOT BE USED FOR CONSTRUCTION, BIDDING, OR PERMIT PURPOSES.

BELTON AREA ENGINEER AND MAINTENANCE FACILITY
BELTON, BELL COUNTY
WACO DISTRICT

Revisions
1
2
3
4

Drawn by: KAO
Project No. CBC4704-00668
Date 05.01.2006
Sheet No.
A4.2
of sheets

CADFILE: T:\MNTFM\D09\WACI\CBC4704-00-668\09-77-4704\00668\Acad\Arch\0668_A4_1-2.dwg Plotted: Mon, Jul. 17, 2006 @ 4:01 PM By: EPURCEL

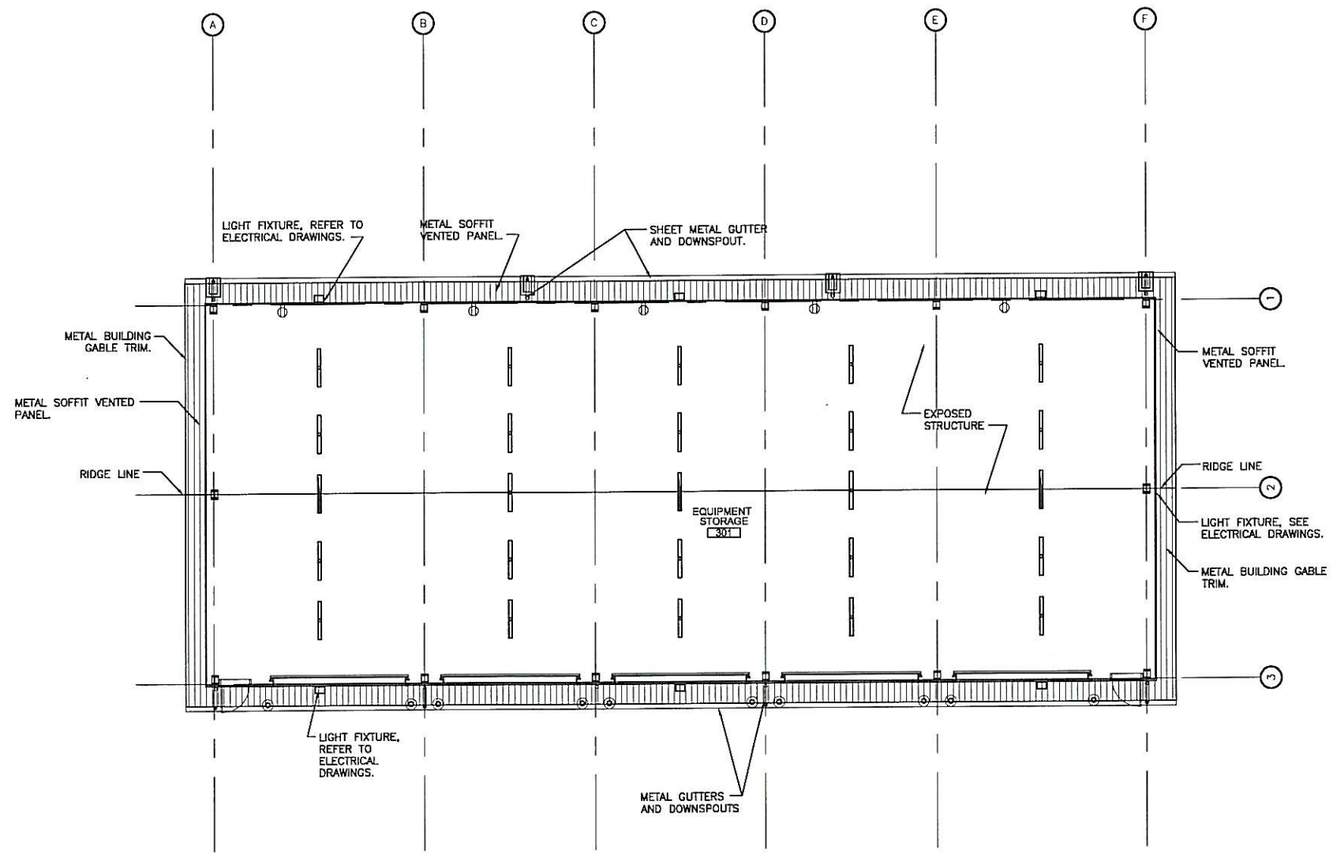

1 REFLECTED CEILING PLAN - VEHICLE STORAGE

SCALE: 1/8" = 1'-0"

LEGEND

- 2' X 2' SUSPENDED ACOUSTICAL CEILING GRID
- RETURN AIR DIFFUSER
- SUPPLY AIR DIFFUSER
- LIGHT FIXTURE REF: ELEC.
- EMERGENCY LIGHT FIXTURE REF: ELEC.
- METAL PANEL SOFFIT
- RECESSED LIGHT FIXTURE
- LIGHT FIXTURE REF: ELEC.
- LIGHT FIXTURE REF: ELEC.
- EXHAUST FAN
- EXIT LIGHT
- LIGHT FIXTURE REF: ELEC.
- GYPSUM BOARD CEILING
- CEMENT PLASTER STUCCO

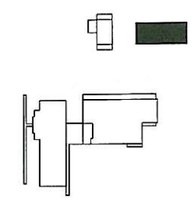

KEY PLAN

REFLECTED CEILING PLAN - VEHICLE STORAGE

NOTE: THIS DRAWING WAS CREATED FOR PRODUCTION 22"x 34" SHEET SIZE. DO NOT SCALE PRINTS.

Texas Department of Transportation
125 E. 11th Street
Austin, Texas 78701-2483
(512) 416-3048

Copyright © 2003 Texas Department of Transportation

THIS DOCUMENT IS RELEASED FOR THE PURPOSE OF INTERIM REVIEW UNDER THE AUTHORITY OF: Kyle Charlton Texas Registration No. 7372 15-13-2005

THIS DRAWING SHALL NOT BE USED FOR CONSTRUCTION, BIDDING, OR PERMIT PURPOSES.

BELTON AREA ENGINEER AND MAINTENANCE FACILITY
BELTON, BELL COUNTY
WACO DISTRICT

Revisions

Drawn by: KAO
Project No. CBC4704-00668
Date 05.01.2006
Sheet No.

A4.3
of sheets

CADFILE: T:\MNTFM\D09WACICBC4704-00-668\09-77-4704\00668\Acad\Arch\0668_A4_1-2.dwg Plotted: Mon, Jul. 17, 2006 @ 3:39 PM By: EPURCEL

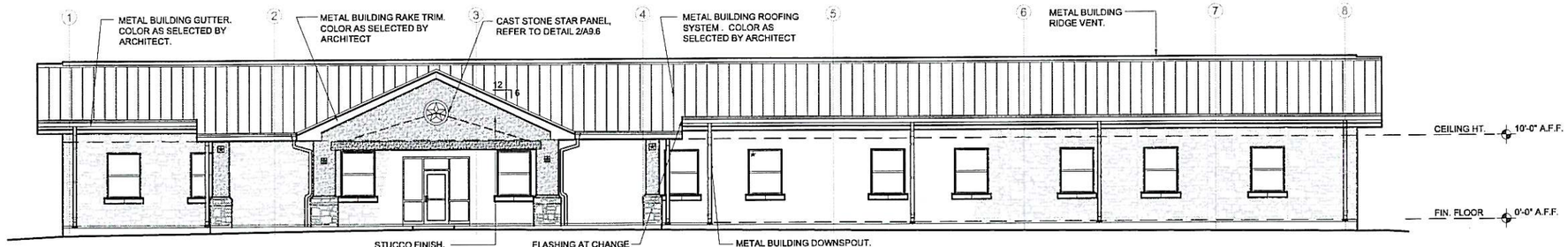

1 SOUTH ELEVATION
SCALE: 1/8"=1'-0"

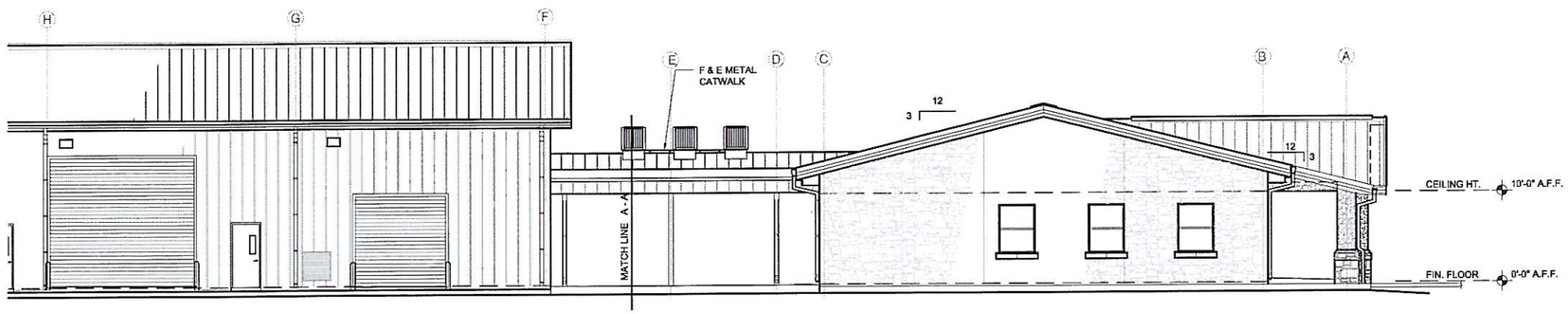

2 WEST ELEVATION
SCALE: 1/8"=1'-0"

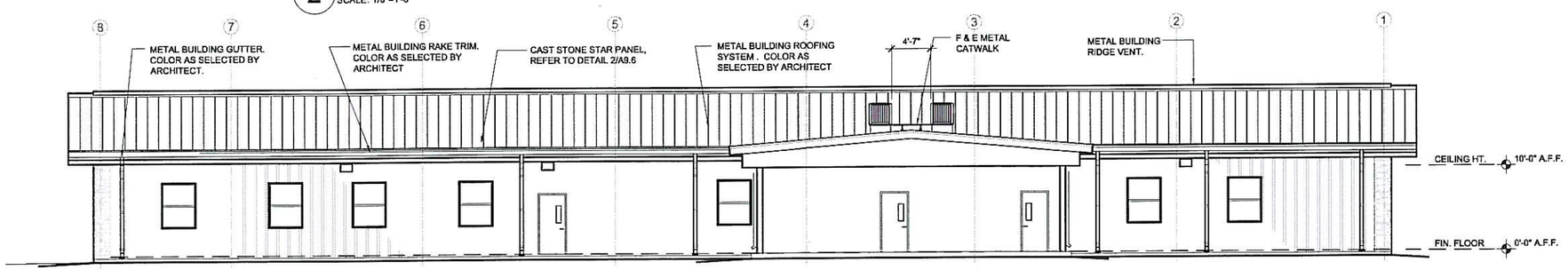

3 NORTH ELEVATION
SCALE: 1/8"=1'-0"

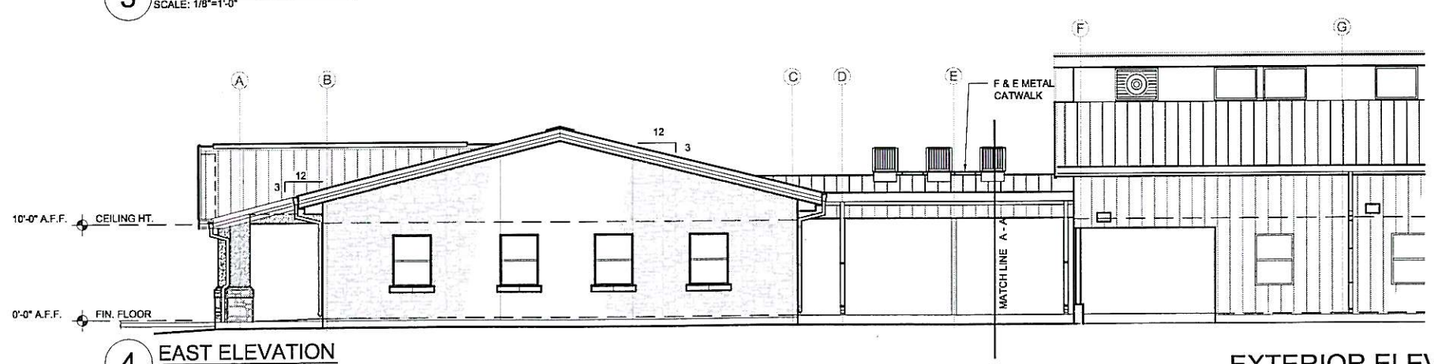

4 EAST ELEVATION
SCALE: 1/8"=1'-0"

EXTERIOR ELEVATIONS - OFFICE BUILDING

NOTE: THIS DRAWING WAS CREATED FOR PRODUCTION ON SHEET SIZE 24 x 36. DO NOT SCALE PRINTS.

Texas Department of Transportation
125 E. 11th Street
Austin, Texas 78701-2483
(512) 416-3048
Copyright © 2005 Texas Department of Transportation

THIS DOCUMENT IS RELEASED FOR THE PURPOSE OF INTERIM REVIEW UNDER THE AUTHORITY OF: Kell Chadwick Texas Registration No. 7972 10-13-2005

THIS DRAWING SHALL NOT BE USED FOR CONSTRUCTION, BIDDING, OR PERMIT PURPOSES.

BELTON AREA ENGINEER AND MAINTENANCE FACILITY
BELTON, BELL COUNTY
WACO DISTRICT

Revisions

Drawn by: kao
Project No. CBC4704-00668
Date 05.01.2006
Sheet No.
A5.1
of sheets

CADFILE: T:\MNTF\ID09WACC\CBC4704-00-66809-77-47040066B\Acad\Arch\0668_A5_1-4.dwg Plotted: Mon. Jul. 17, 2006 @ 3:01 PM By: RDURAN

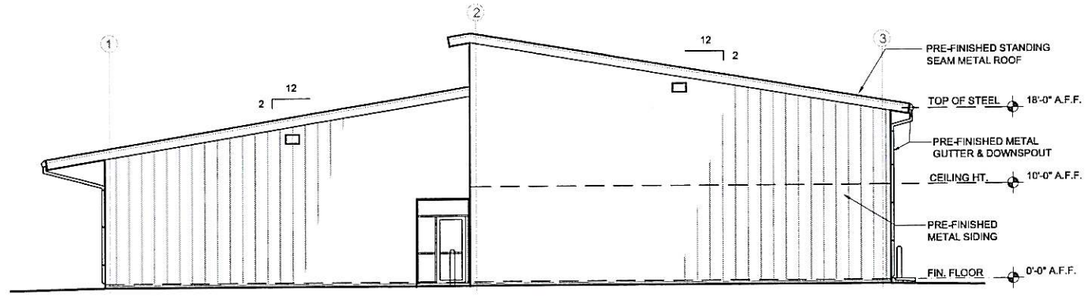

1 NORTH ELEVATION
SCALE: 1/8"=1'-0"

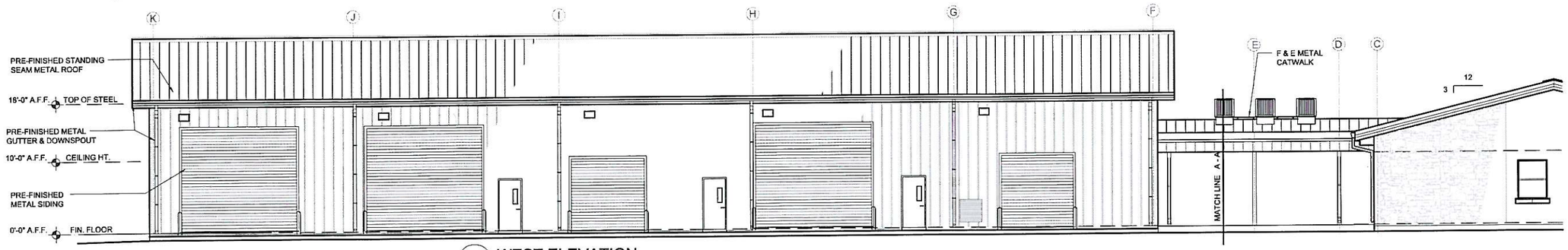

2 WEST ELEVATION
SCALE: 1/8"=1'-0"

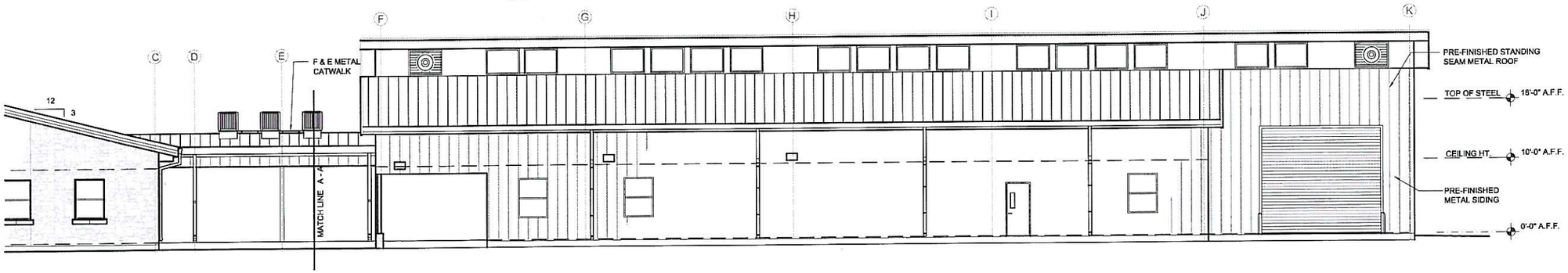

3 EAST ELEVATION
SCALE: 1/8"=1'-0"

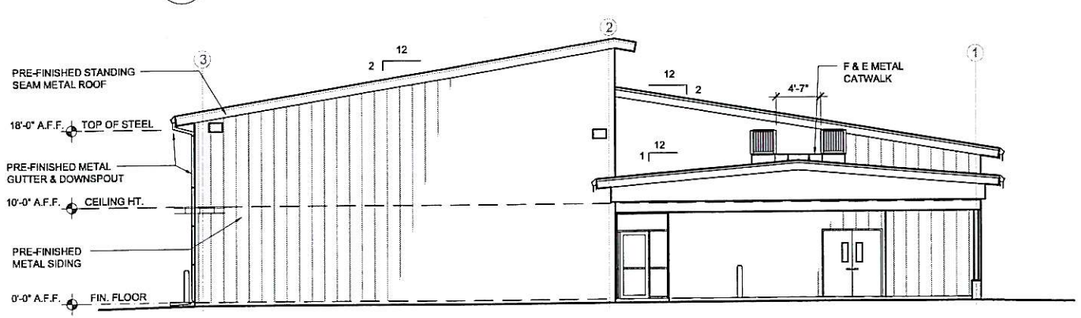

4 SOUTH ELEVATION
SCALE: 1/8"=1'-0"

EXTERIOR ELEVATIONS - LAB / SHOP BUILDING

NOTE: THIS DRAWING WAS CREATED FOR PRODUCTION ON SHEET SIZE 30 DO NOT SCALE PRINTS.

CADFILE: T:\MNTF\ADD9WACI\CBC4704-00-668\09-77-4704006681\Acad\Arch\0668_A5_1-4.dwg Plotted: Mon, Jul. 17, 2006 @ 3:01 PM By: RDURAN

Texas Department of Transportation
125 E. 11th Street
Austin, Texas 78701-2483
(512) 416-3048
Copyright © 2005 Texas Department of Transportation

THIS DOCUMENT IS RELEASED FOR THE PURPOSE OF INTERIM REVIEW
UNDER THE AUTHORITY OF:
Karl Douglas Nal
Texas 78202
15-13-2005
THIS DRAWING SHALL NOT BE USED FOR CONSTRUCTION, BIDDING, OR PERMIT PURPOSES.

BELTON AREA ENGINEER AND MAINTENANCE FACILITY
BELTON, BELL COUNTY
WACO DISTRICT

Revisions

Drawn by: kao
Project No. CBC4704-00668
Date 05.01.2006
Sheet No.
A5.2
of sheets

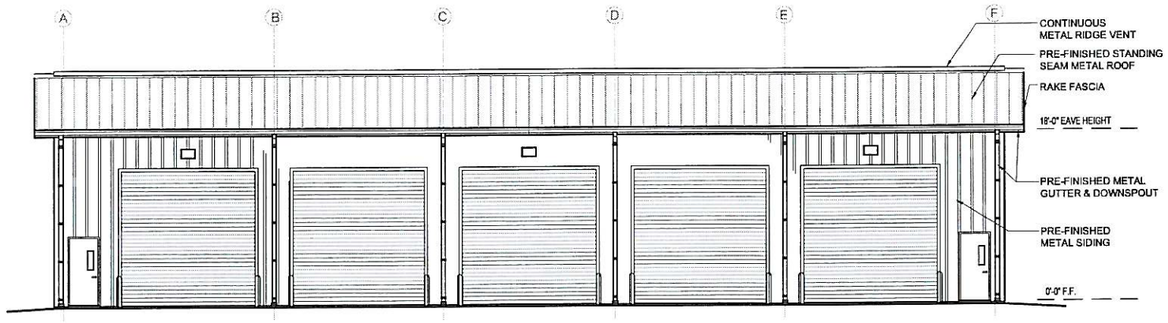

1 FRONT ELEVATION
SCALE: 1/8"=1'-0"

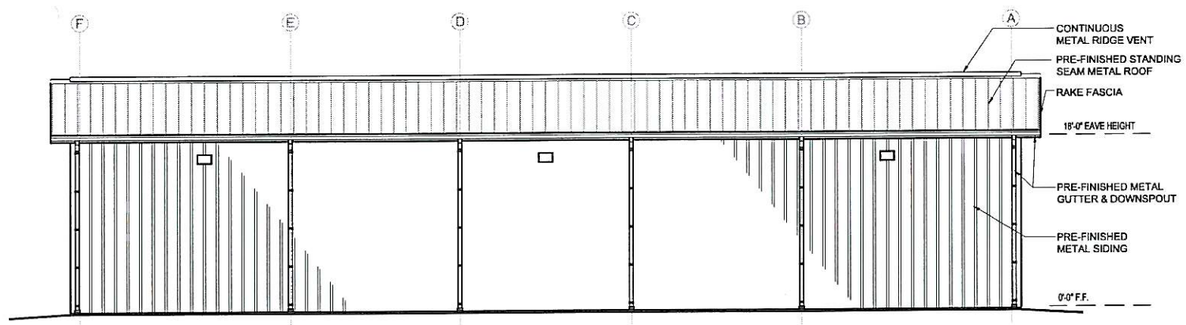

2 REAR ELEVATION
SCALE: 1/8"=1'-0"

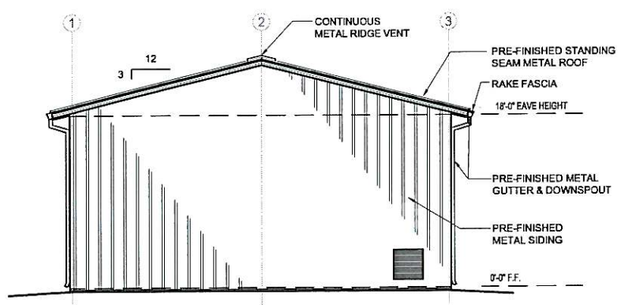

3 SIDE ELEVATION
SCALE: 1/8"=1'-0"

EXTERIOR ELEVATIONS - VEHICLE STORAGE

NOTE: THIS DRAWING WAS CREATED FOR PRODUCTION ON SHEET SIZE 30 DO NOT SCALE PRINTS.

Texas Department of Transportation
125 E. 11th Street
Austin, Texas 78701-2483
(512) 416-3048
Copyright © 2005 Texas Department of Transportation

THIS DOCUMENT IS RELEASED FOR THE PURPOSE OF
INTERIM REVIEW
UNDER THE AUTHORITY OF:
Karl Oberholster
Texas Registration No. 79372
10-13-2005
THIS DRAWING SHALL NOT BE USED FOR CONSTRUCTION, BIDDING, OR PERMIT PURPOSES.

BELTON AREA ENGINEER AND MAINTENANCE FACILITY
BELTON, BELL COUNTY
WACO DISTRICT

Revisions

Drawn by: kao
Project No. CBC4704-00668
Date 05.01.2006
Sheet No.
A5.3
of sheets

CADFILE: T:\MNTFMD09WACI\CBC4704-00-668\09-77-4704\00668\Acad\Acrit\0668_A5_1-4.dwg Plotted: Mon, Jul. 17, 2006 @ 3:01 PM By: RDURAN

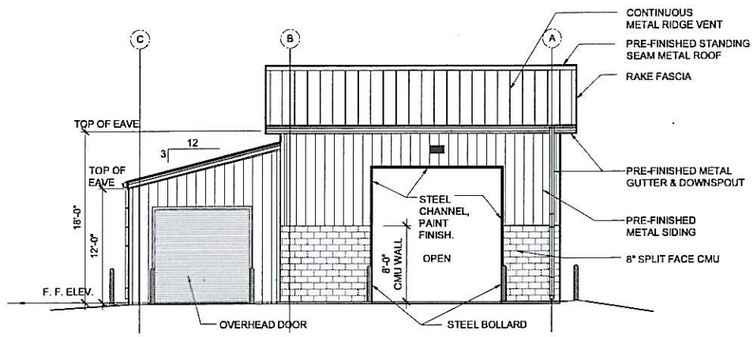

1 ELEVATION
SCALE: 1/8" = 1'-0"

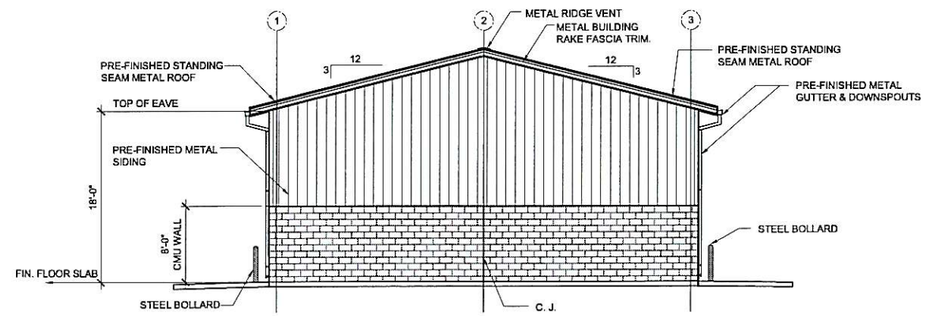

2 ELEVATION
SCALE: 1/8" = 1'-0"

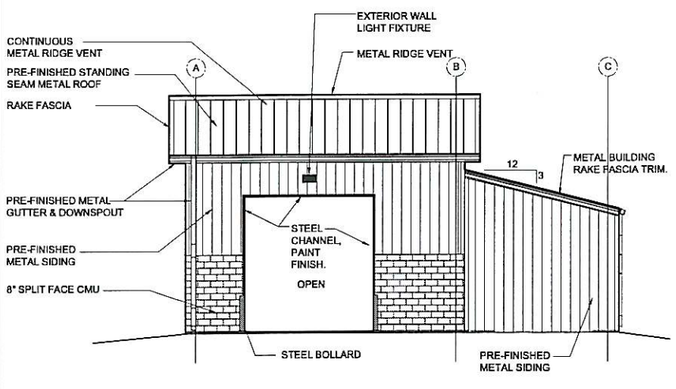

3 ELEVATION
SCALE: 1/8" = 1'-0"

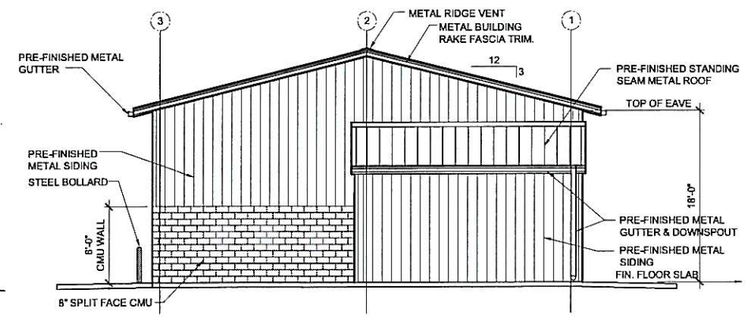

4 ELEVATION
SCALE: 1/8" = 1'-0"

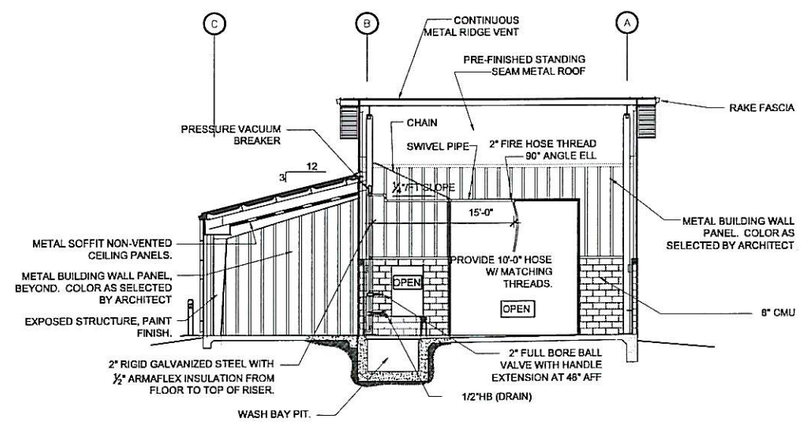

5 BUILDING SECTION
SCALE: 1/8" = 1'-0"

EXTERIOR ELEVATIONS - TRUCK WASH

NOTE: THIS DRAWING WAS CREATED FOR PRODUCTION ON SHEET SIZE. DO NOT SCALE PRINTS.

Texas Department of Transportation
125 E. 11th Street
Austin, Texas 78701-2483
(512) 416-3048

Copyright © 2006 Texas Department of Transportation

THIS DOCUMENT IS RELEASED FOR THE PURPOSE OF
INTERIM REVIEW
UNDER THE AUTHORITY OF:
Karl Oberstrass
Texas Registration No. 79703
15-12-2006

THIS DRAWING SHALL NOT BE USED FOR CONSTRUCTION, BIDDING, OR PERMIT PURPOSES.

BELTON AREA ENGINEER AND MAINTENANCE FACILITY
BELTON, BELL COUNTY
WACO DISTRICT

Revisions

Drawn by: KAO
Project No. CBC4704-00668
Date 05.01.2006
Sheet No.
A5.4
of sheets

CADFILE: T:\MNTFMD09\WACI\CBC4704-00-668\09-77-470400668\Acad\Arch\0668_A5_1-4.dwg Plotted: Mon Jul 17, 2006 @ 3:02 PM By: RDURAN

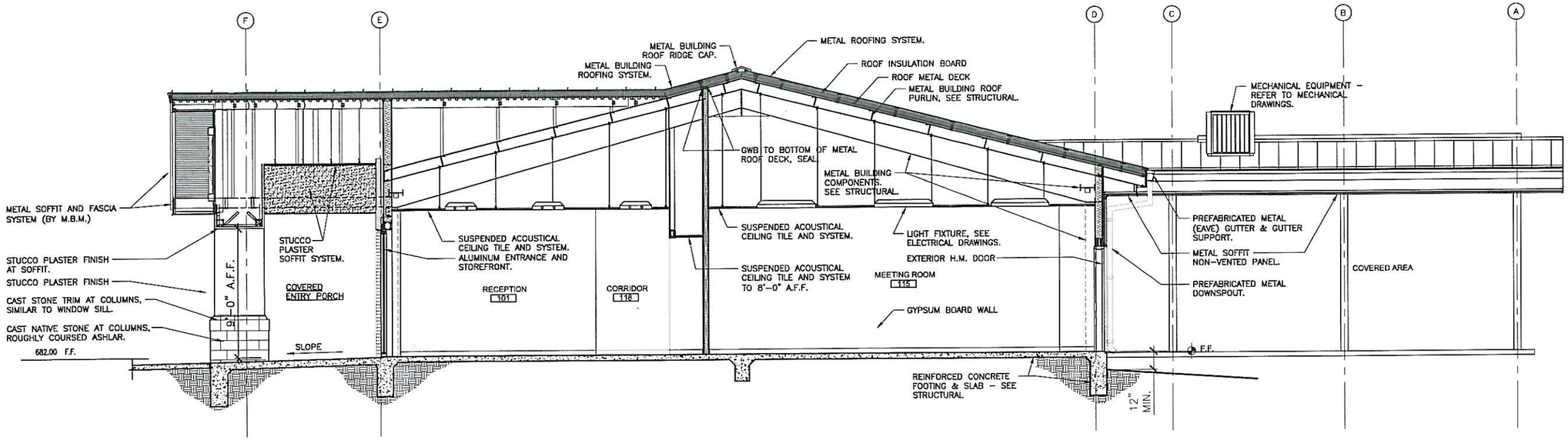

2 BUILDING SECTION - OFFICE
SCALE: 1/4" = 1'-0"

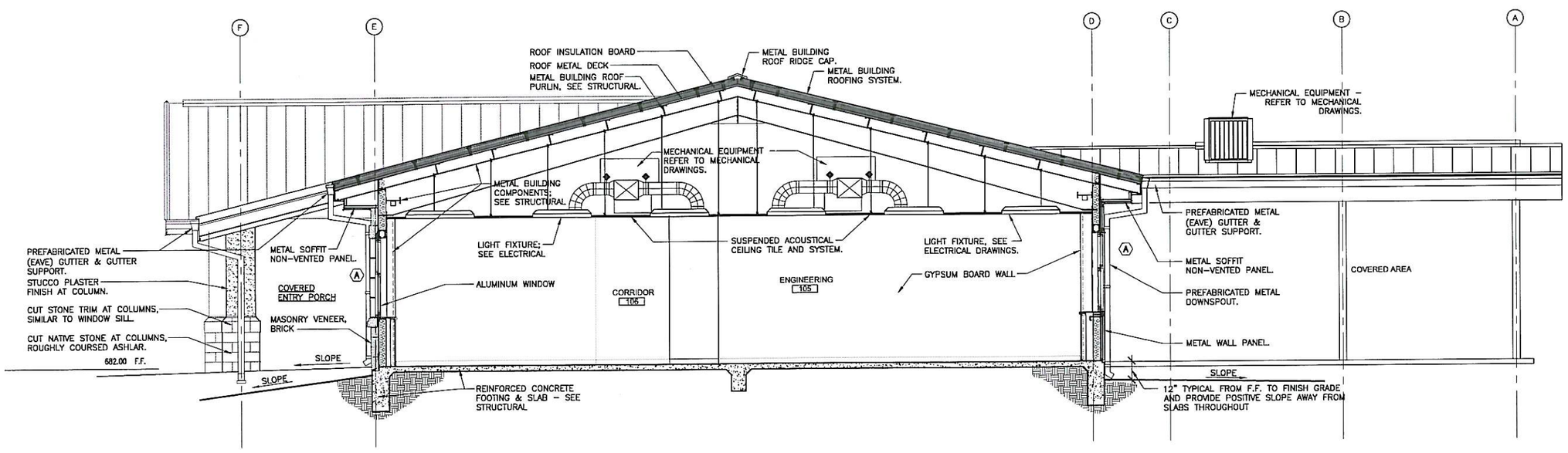

1 BUILDING SECTION - OFFICE
SCALE: 1/4" = 1'-0"

BUILDING SECTIONS

NOTE: THIS DRAWING WAS CREATED FOR PRODUCTION ON 22" x 34" SHEET SIZE. DO NOT SCALE PRINTS.

CADFILE: T:\MNTFM\DGW\ACI\CBC4704-00-668\09-77-4704006681\Arch\0668_A7_1-2.dwg Plotted: Mon, Jul 17, 2006 @ 3:56 PM By: RDURAN

Texas Department of Transportation
125 E. 11th Street
Austin, Texas 78701-2483
(512) 416-3048

Copyright © 2005 Texas Department of Transportation

THIS DOCUMENT IS RELEASED FOR THE PURPOSE OF INTERIM REVIEW
UNDER THE AUTHORITY OF:
Texas Registration No. 7870
THIS DRAWING SHALL NOT BE USED FOR CONSTRUCTION, BIDDING, OR PERMIT PURPOSES.

BELTON AREA ENGINEER AND MAINTENANCE FACILITY

BELTON, BELL COUNTY
WACO DISTRICT

Revisions

Drawn by: KAO
Project No. CBC4704-00668
Date 05.01.2006
Sheet No.
A7.1
of sheets

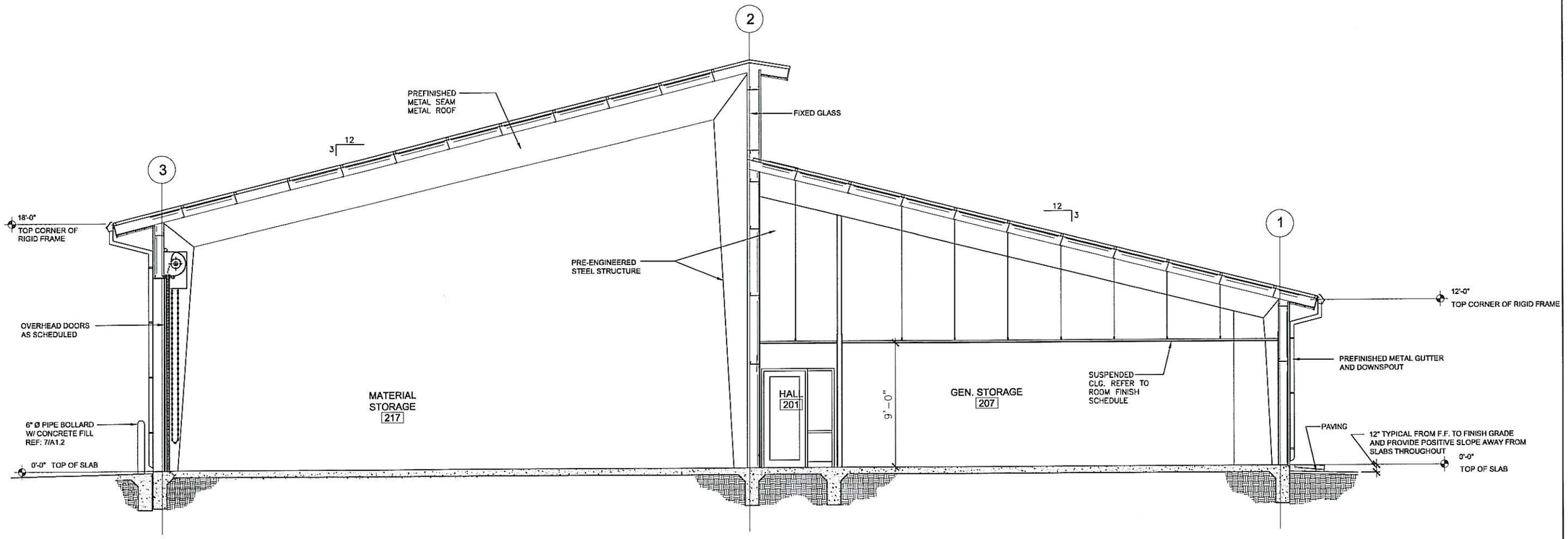

1 BUILDING SECTION - SHOP
SCALE: 1/4" = 1'-0"

Texas Department of Transportation
125 E. 11th Street
Austin, Texas 78701-2483
(512) 416-3048

Copyright © 2005 Texas Department of Transportation

THIS DOCUMENT IS RELEASED FOR THE PURPOSE OF INTERIM REVIEW
UNDER THE AUTHORITY OF:
Richard Rodriguez
Texas Registration No. 7970
Date: 05.01.2006
THIS DRAWING SHALL NOT BE USED FOR CONSTRUCTION, BIDDING, OR PERMIT PURPOSES.

BELTON AREA ENGINEER AND MAINTENANCE FACILITY

BELTON, BELL COUNTY
WACO DISTRICT

Revisions

Drawn by:
KAO
Project No.
CBC4704-00668
Date
05.01.2006
Sheet No.
A7.2
of sheets

BUILDING SECTIONS

NOTE: THIS DRAWING WAS CREATED FOR PRODUCTION 22"x 34" SHEET SIZE. DO NOT SCALE PRINTS.

CADFILE: T:\MNTFMD\09WAC\CBC4704-00-668\09-77-4704006681\Acad\Arch\0568_A7_1-2.dwg Plotted: Mon, Jul 17, 2006 @ 3:57 PM By: RDURAN

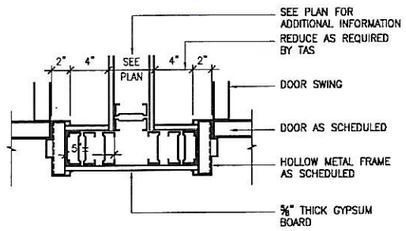

10 DOOR / WALL OFFSET
SCALE: 1 -1/2"= 1'-0"

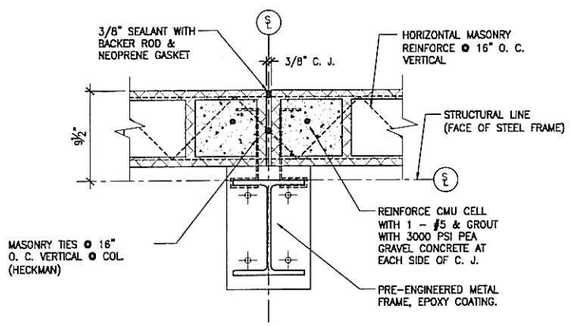

9 CONTROL JOINT DETAIL
SCALE: 1 -1/2"= 1'-0"

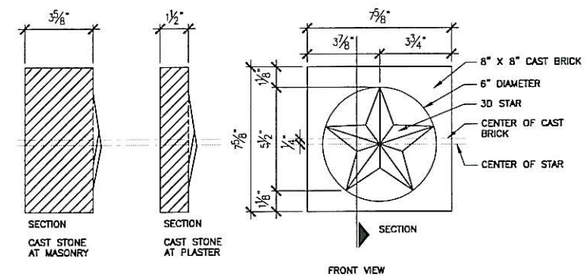

1 CAST STONE STAR DETAIL
SCALE: 3"= 1'-0"

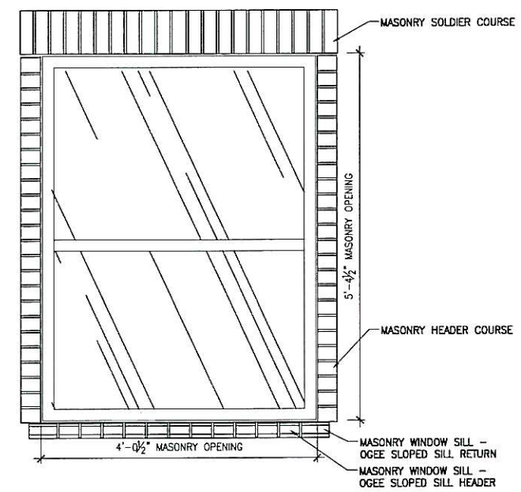

4 WINDOW MASONRY DETAIL
SCALE: N.T.S.

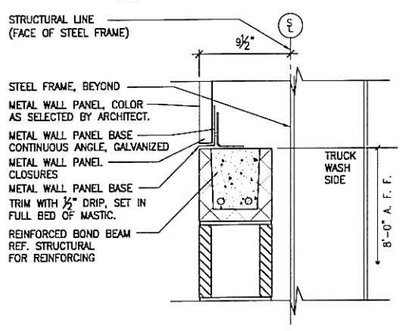

8 WALL DETAIL
SCALE: 1 -1/2"= 1'-0"

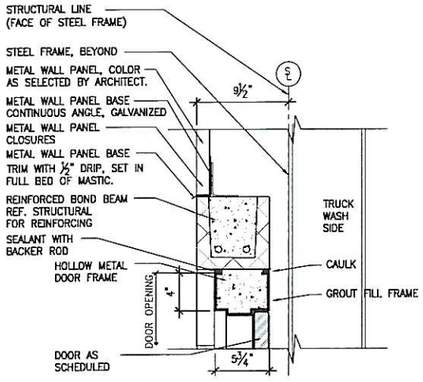

6 DOOR HEAD
SCALE: 1 -1/2"= 1'-0"

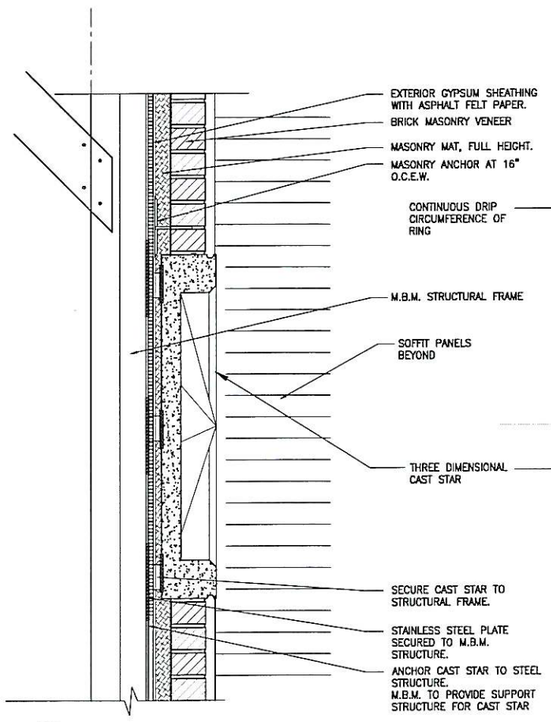

3 CAST STONE STAR DETAIL
SCALE: 1 -1/2"= 1'-0"

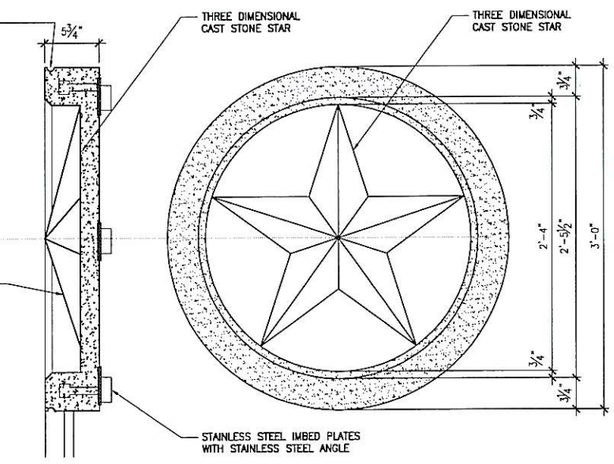

2 CAST STONE STAR ELEVATION / SECTION
SCALE: 1 -1/2"= 1'-0"

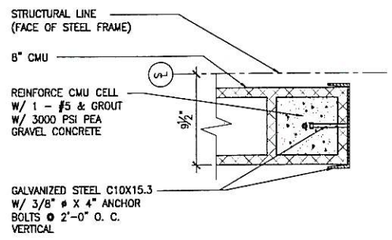

7 DOOR JAMB / HEAD SIMILAR
SCALE: 1 -1/2"= 1'-0"

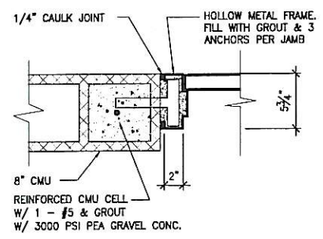

5 DOOR JAMB
SCALE: 1 -1/2"= 1'-0"

DETAILS

NOTE: THIS DRAWING WAS CREATED FOR PRODUCTION ON 22" x 34" SHEET SIZE. DO NOT SCALE PRINTS.

Texas Department of Transportation
125 E. 11th Street
Austin, Texas 78701-2483
(512) 416-3048
Copyright © 2005 Texas Department of Transportation

BELTON AREA ENGINEER AND MAINTENANCE FACILITY
BELTON, BELL COUNTY
WACO DISTRICT

Revisions

Drawn by: JOT
Project No. CBC4704-00668
Date 05.01.2006
Sheet No.
A9.6
of sheets

CADFILE: T:\MNTFM\D09WACO\CBC4704-00-66809-77-4710400668\Acad\Arch\0668_A9_3.dwg Plotted: Mon, Jul 17, 2006 @ 2:26 PM By: SFLORE2

Texas Department of Transportation

OFFICIAL DATE OF ADDENDUM: MAY 2, 2005

REGISTERED ARCHITECT ROEL BAZAN 14289 STATE OF TEXAS

4/29/05

ADDENDUM NO. 1 - issued by the TEXAS DEPARTMENT OF TRANSPORTATION

CONSTRUCTION OF SOUTH TRAVIS AREA ENGINEERING
AND MAINTENANCE FACILITY, AUSTIN DISTRICT HEADQUARTERS
IH 35 FRONTAGE ROAD AND BRANDT ROAD
AUSTIN, TRAVIS COUNTY, AUSTIN DISTRICT
SITE NO. 149001, BUILDING NO. 148009
PROJECT NO. CBC4704-00-238
DETAIL NO. 14-77-470400238
CSJ 4704-00-238
ESTIMATED CONSTRUCTION COST: $3,000,000.00
BID GUARANTY or BID BOND: $60,000.00
PRE-BID CONFERENCE: APRIL 19, 2005 - 2:00 P.M.
AT IH 35 FRONTAGE ROAD AND BRANDT ROAD
AUSTIN, TEXAS
BID DATE: MAY 11, 2005 - 1:00 P.M.

STATE OF TEXAS ROBERT S. RAY 40152 REGISTERED PROFESSIONAL ENGINEER

4/29/05

Project by Texas Department of Transportation
Facilities Management – MNT Division, Project Manager, Roel Bazan
150 E. Riverside Drive, 4 North, Austin, Texas 78704
512-416-3048, FAX 512-416-3080

BIDS DUE: 1:00 p.m., local time, MAY 11, 2005

AT 200 EAST RIVERSIDE DRIVE, AUSTIN, TEXAS, ROOM 1A.1

NOTE: THIS ADDENDUM SHALL BECOME AN OFFICIAL PART OF THE PLANS AND SPECIFICATIONS AND BIDDERS SHALL ACKNOWLEDGE RECEIPT OF THIS ADDENDUM ON THE "ADDENDUM ACKNOWLEDGMENT" SHEET PROVIDED IN THE PROPOSAL/SPECIFICATION BOOK. FAILURE TO ACKNOWLEDGE RECEIPT OF AN ADDENDUM WILL RESULT IN THE BID NOT BEING READ.

NOTICE TO BIDDERS:

This Addendum shall be considered as part of the Contract Documents for the above mentioned project as though it had been issued at the same time and incorporated therewith. Where provisions of the following supplementary data differ from those of the original Contract Documents, this Addendum shall govern and take precedence. Work not specifically deleted, modified, changed or altered by this Addendum shall remain in effect as a part of the Contract Documents.

Bidders are hereby notified that they shall make any necessary adjustment(s) in their estimates based on this Addendum. It will be construed that each bidder's proposal is submitted with full knowledge of all modifications and supplemental data specified herein.

Total pages to this Addendum:

Date: May 2, 2005
Project Name: Austin District-South Travis AE & M Facility
Project Location: Frontage Rd. South IH 35 and Brandt Rd.
Austin, Texas

ADDENDUM NO. 1

This addendum forms a part of the Contract Documents and modifies the original Project Specifications and Drawings dated March 23, 2005, as noted below. Acknowledge receipt of the Addendum in the space provided on the bid form. Failure to do so may subject the Bidder to disqualification.

IN THE ARCHITECTURAL SPECIFICATIONS:

Item No. 1: INDEX-1 SPECIAL PROVISIONS & SPECIAL SPECIFICATIONS
Section 3635 - Computer Equipment: delete this entire section.

Item No. 2: DIVISION 1 - GENERAL REQUIREMENTS - Summary of Work- Section 01010
Par.1.01 B Project Summary: Building 1 Office and Building 2 Maintenance are to be considered as Building 1. Building 2 is the Laboratory/Storage and Building 3 is the Vehicle Storage.

Item No. 3: DIVISION 1 - GENERAL REQUIREMENTS - Section 01320 - Allowances
Add Section 01320, see specification attachment.
Add Unit Price Sheet: **This sheet must be completed and inserted in the proposal for your bid to be read.**

Item No. 4: DIVISION 2 - SITE WORK - Section 02210 - Geotechnical Data
Add entire Geotechnical Data documents.

Item No. 5: DIVISION 2 - SITE WORK - Section 02741 - Hot-Mix Asphalt Paving / Striping
Part 1, Par.1.04 A, 1 Standard Specifications: Change year from 1993 to 2004. Any reference to 1993 shall be changed to 2004.

Item No. 6: DIVISION 4 - MASONRY - Section 04090 - Masonry Accessories
Part 2, Par.2.01 A : Manufacturer: Change CavClear Masonry Mat to CavClear/Archovations, Inc

Item No. 7: DIVISION 4 - MASONRY - Section 04090 - Masonry Accessories
Part 2, Par.2.03 B : Materials: Change Stone Mat to Masonry Mat.

Item No. 8: DIVISION 4-MASONRY - Section 04210 - Stone Masonry
Part 2, Par. 2.01 A, page 2: Manufacturer: Delete CCI Manufacturing, Inc.
Part 2, Par. 2.02 A, page 2: Limestone Color: Delete "Texas Gold", Delete TexaStone Quarries, Garden City, Tx. Add "Old Yeller" as manufactured by San Jacinto Materials, Inc. San Antonio, Tx. 78707, (210) 736-0924.

Item No. 9: DIVISION 6 - WOOD AND PLASTIC- Section 06100 - Carpentry Work
Part 1, Par.1.01 A : Delete reference to cabinet work.

Item No. 10: DIVISION 8 - DOORS AND WINDOWS- Section 08330 - Rolling Service Doors
Part 1, Par.1.01 D : Submittals: Provide Shop Drawings for Rolling Service Doors.

Item No. 11: DIVISION 9 - FINISHES - Section 09260 - Gypsum Board System
Part 3, Par.3.03 Gypsum Installation: Add Paragraph G to read: Where GWB extends to the bottom side of the roof structure the top eight inches of the GWB shall not be anchored to the studs or top track.

Item No. 12: DIVISION 10 - SPECIALTIES - Section 10425 - Signage
Part 2, Par.2.01C Metal Finishes: Stars: Delete paragraph C.1 reference to Aluminum Stars

Item No. 13: DIVISION 13 - SPECIAL CONSTRUCTION - Section 13120 - Pre-Engineered Buildings
Part 2, Par.2.14 Fabrication -Wall & Roof Systems, item B : Change Kynar 500 coating system to Galvalume metal roof system.

IN THE MEP SPECIFICATIONS:

Item No. 1: Add the following specification 16520 – Exterior Luminaries to the specifications and to the specification index. Specification is attached to this addendum.

IN THE ARCHITECTURAL DRAWINGS:

Item No. 1: Drawing Sheet A2.1: Record Storage Room 102. Add shelving to South wall per interior elevation 13/A6.2

Item No. 2: Drawing Sheet A2.3: General Notes: Add Note 6 to read: Contractor to provide flashing and waterproofing around thru wall heat pump at Radio Room 138.

Item No. 3: Drawing Sheet A9.1: Room Finish Schedule: Change flooring at rooms 103, 104, 106, 107, 119, and 120 from carpet to VCT flooring.

Item No. 4: Drawing Sheet A9.2: Door Types: Refer to door schedule for proper door types.

Item No. 5: Drawing Sheet A9.2; Door Types: Door type AL1 shall be narrow style. Delete reference to medium style.

Item No. 6: Drawing Sheet A9.2: Door Schedule: Change Door Type at Doors 110 and 130A from Type D4 to Type D7.

Item No. 7: Drawing Sheet A9.2: Door Schedule – Doors 140B, 140C, 140D and 140E: Change Door sized from 14’-0” x 14’-0” x 2” to 12’-0” x 14’-0” x 2”.

Item No. 8: Drawing Sheet A9.2: Door Schedule – Door 140B: Change Hardware set from 2 to 7.

Item No. 9 Drawing Sheet A9.2; Window Types: Window types A and B shall be single hung. Delete reference to aluminum store front system and projecting sash.

IN THE ELECTRICAL DRAWINGS:

Item No. 1: Sheet E1.1 Electrical and Gas Site Plan shall be renamed as PE1.1 Electrical and Gas Site Plan. The Coversheet shows an index of drawings listing E1.1 Electrical and Gas Site Plan rename this as PE1.1 Electrical and Gas Site Plan.

Item No. 2: Sheet PE1.1 Replace Keyed Note#1 with the following:

1. Pad mounted transformer provided by Austin Energy install pad for pad mounted transformer per Austin Energy requirements adjust equipment pad dimensions and location per Austin Energy. Contractor shall coordinate with Austin Energy the contact person is Kevin Fraser 512-505-7665. Austin Energy will provide the transformer, wire to the transformer and relocate the existing overhead power poles crossing the property in a separate contract. The contractor shall provide the conduit and pull string, and the required equipment pad to the pad mounted transformer. See riser for conduit sizes.

Item No. 3: Sheet PE1.1 Replace Keyed Note#4 with the following:

4. Contractor shall coordinate with Southwestern Bell; the contact person is John Hoyal 512-870-5185. Southwestern Bell will provide the pedestal and 200 pair voice data cable to the telecommunication room and provide demarcation in the telecommunication room. Contractor shall provide 2- 4" HDPE-13.5 with pull wires, stub up in telecommunication room. Coordinate with Southwestern Bell for location of loop up for telephone pedestal. Refer to sheet E2.5 for continuation. Contractor shall pay all associated fees including relocation of existing overhead telephone associated with the overhead power poles which shall be relocated.

Item No. 4: Sheet PE1.1 Replace Keyed Note#5 with the following:

5. Contractor shall coordinate with Austin Texas Gas Service; the contact person is Robin Hartman 512-465-1134. Austin Texas Gas Service shall install and provide a main extension, yard extension and set a meter at Building#1 in a separate contract. Refer to sheet P2.2 for location of meter. Contractor shall make a connection with a shut off valve aboveground downstream of meter. Extend 1-1/2" fuel piping underground to emergency generator provide a listed union, shut off valve and a stainless flexible connection at the generator. Total Natural Gas load to site is 630,000 BTUH.

Item No. 5: Sheet PE1.1 Add Keyed Note#18:

18. Contractor shall coordinate with Time Warner Cable; the contact person is Joe Marek 512-485-6357. Time Warner Cable shall remove all television cable routed on existing power poles across the property scheduled to be removed. Contractor shall pay all associated fees.

Item No. 6: Sheet E2.1 Replace Keyed Note#3:

3. Provide and rigid mount backboard, backboard shall be a full sheet of plywood, CDX construction grade and or better. Install with smooth side exposed, 8ft length in the horizontal position, with top of plywood 6" to 8" below the ceiling. Backboard shall be capable of supporting 200 lbs of dead weight. Prior to backboard installation, contractor shall paint all surfaces with fire retardant white paint. All damaged surfaces after installation shall be repainted. Exposed surface shall be free of significant voids, cracks, and blemishes.

Item No. 7: Sheet E2.4, all lights in Building# 3 called out as AE shall be changed to EE.

Item No. 8: Sheet E2.9.1 Replace Keyed Note#1 with the following:

1. Mount EPO - emergency power off switch to activate shunt trip breakers in FE panel on pedestal per NEC 48" A.F.G. EPO switch shall be located within 20 to 100ft from gas/diesel dispenser. Coordinate location with other disciplines.

Item No. 9: Sheet E2.9.1 Detail Call Out #4 Shunt Trip Wiring Diagram:

1. Shunt trip detail has a note which states, “See Note 3”, replace note with See Fuel Station Notes#10.

APPROVED SUBSTITUTIONS

Item No. 1: Door Closer: Dor-O-Matic Hardware Products - 800-815-1517
Item No. 2: Panic Hardware: Monarch Hardware - 8---826-5792
Item No. 3: Pre-Engineered Metal Building Systems: Alliance Steel Building Systems - 800-624-1579.

END OF ADDENDUM NO. 1

SECTION 01320
ALLOWANCES

PART 1 GENERAL

1.1 SECTION INCLUDES

A. This section includes administrative and procedural requirements governing allowances.

1. Certain materials and equipment are specified in the Contract Documents by allowances. These allowances include installation. Allowances have been established in lieu of additional requirements and to deter selection of actual materials and equipment to a later date when additional information is available. If necessary, additional requirements will be issued by Change Order.

B. Types of allowances include the following:

1. Unit-cost allowances.

1.2 SELECTION AND PURCHASE

A. At the earliest practical date after award of the Contract, advice Owner of the date when final selection and purchase of each product or system described by an allowance must be completed to avoid delaying the Work.

B. Purchase products and systems selected by Owner from the designated supplier.

1.3 SUBMITTALS

A. Submit proposals for purchase of products or systems included in allowance, in the form specified for Change Orders.

B. Submit invoices of delivery slips to show actual quantities of materials delivered to the site for use in fulfillment of each allowance.

PART 2 PRODUCTS

Not Used.

PART 3 EXECUTION

3.1 EXAMINATION

A. Examine products covered by an allowance promptly on delivery for damage or defects. Return damaged or defective products to manufacturer for replacement.

3.2 PREPARATION

Coordinate materials and their installation for each allowance with related materials and installations to ensure that each allowance item is completely integrated and interfaced with related work. 3.3

3.3 SCHEDULE OF ALLOWANCES

A. The following allowance item amounts are in addition to any of the items required, implied, or indicated by the final plans and specifications to be provided. Installation of an allowance item shall be in accordance with the plans and specifications. The cost for the allowance items is to be included in the Guaranteed Maximum Price for the project. The use and location of an allowance item will be as directed by the TxDOT. The unit price for an allowance item will be used to determine both "add" and "deduct" pricing during the Contract Time. TxDOT will be credited for unused allowance items at the completion of the project using the unit price as the basis of credit.

Item 1. The General Contractor will provide an allowance of **5** installations of free-standing (floor to ceiling), "dedicated circuit" power poles complete and operable. Each installation shall include but not be limited to: 20 amp branch circuit breaker, run of up to 150 feet of conduit, ceiling J-Box, run of up to 20 feet of flex conduit, and (3) #10 AWG copper conductors. Wire AWG sizes specified are minimum and shall be increased in size in accordance with NEC requirements when applicable at no additional cost. The power poles shall be Wire mold Model No. 25DTP-4 or approved equal.

Item 2. The General Contractor will provide an allowance of **5** installations of electrical circuits and connections of modular furniture power poles and/or base power feeds. Each installation shall include but not be limited to: 4 - 20 amp branch circuit breakers, up to 150 feet of conduit, up to 4 ceiling / wall J-Box(s), up to 20 feet of flex conduit per J-Box, and (6) #10 and (2) # 12 AWG copper conductors color coded as specified. For base power feed installation in wall raceway and wall box shall be included. Wire AWG sizes specified are minimum and shall be increased in size in accordance with the requirements of the Note following the table titled "Texas Department of Transportation Wire Standard". Surface mounted raceway may be used in lieu of in wall raceway and wall box for base power feed only in locations approved by the TxDOT at no additional cost.

Item 3. The General Contractor will provide an allowance of **5** installations of modular furniture voice/data outlets. Installation of a voice/data outlet shall include all items specified, ancillary to, and necessary for complete and operable voice and data network circuits. Each installation shall include but not be limited to up to 325 feet of each cable required per outlet installation.

Item 4. The General Contractor will provide an allowance of **5** installations of wall mounted voice/data outlets. Installation of a voice/data outlet shall include all items specified, ancillary to, and necessary for complete and operable voice and data network circuits. Each installation shall include but not be limited to up to 325 feet of each cable required per outlet installation. In wall raceway installation shall include back box, ¾" conduit, pull cord, insulated bushing and any items necessary for a complete raceway installation.

Item 5. The General Contractor will provide an allowance of **2** installations of an interior solid core doors hollow metal frames, and complete hardware sets. Installation of an interior solid core door, hollow metal frame, and complete hardware set shall include all items specified, ancillary to, and necessary for a complete, finished, and operable interior door. Installation of an interior solid core door shall include, but not be limited to, solid core door, hollow metal frame, butts, lockset, silencers, door stop, door closer, and finishes.

Item 6. The General Contractor will provide an allowance of **15** linear feet of ceiling height metal stud drywall partition installations, 3 5/8, 25 gauge metal stud at 16" o.c. Installation of a ceiling height metal stud drywall partition shall include all items specified, ancillary to, and necessary for complete installation to include, but not be limited to, taped, floated, textured, painted, base, and ceiling and flooring adjustments.

Item 7. The General Contractor will provide an allowance of **5** single pole light switch installations. Installation of single pole light switch shall include all items specified, ancillary to, and necessary for complete installation to include, but not be limited to, single pole switch, box(s), conduit, fittings, wire, connections, and face plate.

Item 8. The General Contractor will provide an allowance of **5** single circuit wall receptacle installations. Installation of single circuit wall receptacle shall include all items specified, ancillary to, and necessary for complete installation to include, but not be limited to, receptacle, box(s), conduit, fittings, wire, connections, circuit breaker, and face plate.

Item 9. The General Contractor will provide an allowance of **5** single wall receptacle installations. Installation of single wall receptacle shall include all items specified, ancillary to, and necessary for complete installation to include, but not be limited to, receptacle, box(s), conduit, fittings, wire, connections, face plate, and one circuit breaker per 8 receptacles.

Item 10. The General Contractor will provide an allowance of **5** fluorescent 2 x 4 lay in light fixture installations. Installation of fluorescent light fixture shall include all items specified, ancillary to, and necessary for complete installation to include, but not be limited to, fluorescent light fixture, box(s), flex conduit, fittings, wire, and connections.

Item 11. The General Contractor will provide an allowance of **100** l.f. of security fencing installation. Installation of security fencing shall include all items specified, ancillary to, and necessary for a complete installation.

Item 12. The General Contractor will provide an allowance of **100** s.f. of Vinyl Composition Tile (VCT) and 50 l.f. of rubber base installation. Installation of VCT and rubber base shall include all items specified, ancillary to, and necessary for a complete installation.

Item 13. The General Contractor will provide an allowance of **450** Square Yards of Asphalt Paving and Flexible Base. Installation of Asphalt Pavement and Flexible Base material shall include all items specified, ancillary to, and necessary for a complete installation.

END OF SECTION

UNIT PRICES

Unit prices will be used for supplemental instruction allowance work, change order work, and allowance adjustments, should the need arise. Unit prices shall be for items as specified, complete, in place and operational and include all associated material, equipment, articles, preparation, testing, finishes, connections, removal, certification, design, etc. Unit prices shall include profit and overhead costs. These unit prices will govern both “add” and “deduct” work at any stage of the project during the term of the Contract (Contract Time). The State reserves the right to negotiate changed work if unit prices are deemed by the State to be unreasonable and not in the public interest. Refer to Allowances sheet for additional information for each item.

ITEM	ITEM DESCRIPTION	UNIT	UNIT PRICE
1	free-standing dedicated circuit power pole	each	$ _____
2	modular furniture power pole / base feed	each	$ _____
3	modular furniture voice/data outlet	each	$ _____
4	wall mounted voice/data outlet	each	$ _____
5	interior solid core door / frame assembly	each	$ _____
6	ceiling height partition	ln. ft.	$ _____
7	single pole light switch	each	$ _____
8	single circuit wall receptacle	each	$ _____
9	wall receptacle	each	$ _____
10	fluorescent light fixture	each	$ _____
11	security fence	ln. ft.	$ _____
12	vct flooring	sq. ft.	$ _____
13	asphalt paving and flexible base	sq. yd.	$ _____

THIS SHEET MUST BE COMPLETED AND INSERTED IN THE PROPOSAL FOR YOUR BID TO BE READ.

SECTION 16520
EXTERIOR LUMINAIRES

PART 1 - GENERAL

1.1 SUMMARY

A. Section includes exterior luminaries, poles, and accessories.

1.2 RELATED SECTIONS

A. 16010 – Basic Electrical Requirements

1.3 SUBMITTALS

A. Product Data: Submit dimensions, ratings, and performance data.

1.4 QUALIFICATIONS

A. Manufacturer: Company specializing in manufacturing products specified in this section with minimum three years experience.

1.5 COORDINATION

A. Furnish bolt templates and pole mounting accessories to installer of pole foundations.

PART 2 - PRODUCTS

2.1 LUMINARIES

A. Product Description: Complete exterior luminaire assemblies, with features, options, and accessories as scheduled.

2.2 FLUORESCENT BALLASTS

A. Manufacturers:
   1. Magnetek Inc.
   2. Philips Electronic North America.
   3. Advanced
   4. Approved equal.

B. Product Description: Electronic ballast certified by Certified Ballast Manufacturers, Inc. to comply with ANSI C82.1, suitable for lamps and environmental conditions specified, with voltage to match luminaire voltage.

2.3 HIGH INTENSITY DISCHARGE (HID) BALLASTS

A. Manufacturers:

1. Magnetek Inc.
2. Philips Electronic North America.
3. Advanced
4. Approved equal.

B. Product Description: ANSI C82.4, metal halide lamp ballast, suitable for lamp and environmental conditions specified, with voltage to match luminaire voltage.

2.4 FLUORESCENT LAMPS

A. Manufacturers:
1. General Electric Co
2. Philips Electronics.
3. Approved equal.

2.5 HID LAMPS

A. Manufacturers:
1. General Electric Co
2. Philips Electronic North America
3. Approved equal.

2.6 METAL POLES

A. Material and Finish: Steel with polyester powder finish as scheduled in fixture schedule on drawings.

B. Section Shape and Dimensions: Tapered round

C. Height: As scheduled.

D. Accessories:
1. Handhold.
2. Anchor bolts.

PART 3 -EXECUTION

3.1 EXAMINATION

A. Verify foundations are ready to receive fixtures.

3.2 INSTALLATION

A. Install concrete bases for lighting poles at locations as indicated on Drawings.

B. Install poles plumb. Grout around each base.

C. Install lamps in each luminaire.

D. Bond and ground luminaries, metal accessories and metal poles in accordance with Section 16060. Install supplementary grounding electrode at each pole.

3.3 FIELD QUALITY CONTROL

A. Operate each luminaire after installation and connection. Inspect for improper connections and operation.

3.4 ADJUSTING

A. Aim and adjust luminaries to provide illumination levels and distribution.

3.5 CLEANING

A. Clean photometric control surfaces as recommended by manufacturer.

B. Clean finishes and touch up damage.

3.6 PROTECTION OF FINISHED WORK

A. Re-lamp luminaries having failed lamps at Substantial Completion.

3.7 SCHEDULES

A. See schedule on drawings.

END OF SECTION

SOUTH TRAVIS AREA ENGINEER & MAINTENANCE FACILITY

AUSTIN DISTRICT

PROJECT NO: CBC4704-00-238

SPECIFICATIONS INDEX

DIVISION 1 - GENERAL REQUIREMENTS

01002 - Definitions and Standards
01004 - Specification Outline
01010 - Summary of Work - Buildings
01200 - Project Meetings
01300 - Administrative Requirements
01310 - Construction Schedules
01330 – Submittal Procedures
01340 - Shop Drawings, Production Data and Samples
01400 - Quality Control Procedures
01410 - Testing Laboratory Services
01500 - Construction and Temporary Controls
01630 - Substitutions and Product Options
01700 - Execution Requirements
01720 - Project Record Documents

DIVISION 2 - SITE WORK

02100 - Site Clearing
02200 - Earthwork
02210 - Geotechnical Data
02224 - Trenching
02361 - Termite Control
02741 - Hot Mix Asphalt Paving / Striping
02751 - Cement Concrete
02764 - Pavement Joint Sealants
02780 - Detectable Warning
02811 - Landscape Irrigation
02831 - Chain Link Fences and Gates
02832 - Ornamental Steel Fence and Gate
02923 - Landscape Grading
02924 - Seeding and Soil Supplements
02925 - Sodding
02930 - Exterior Plants

DIVISION 3 - CONCRETE

03300 - Cast-In-Place Concrete

DIVISION 4 - MASONRY

04090 – Masonry Accessories
04100 - Mortar
04210 - Stone Masonry
04600 – Cast Stone

DIVISION 5 – METALS

05312 - Steel Roof Deck
05500 – Metal Fabrications

DIVISION 6 - WOOD AND PLASTIC

06100 – Carpentry Work
06220 - Millwork

DIVISION 7 - THERMAL AND MOISTURE PROTECTION

07160 - Bituminous Damp Proofing
07193 - Plastic Vapor Barrier
07200 - Roof Insulation Board
07213 - Fibrous Batt Insulation
07710 - Roof Curb
07900 - Joint Sealers

DIVISION 8 - DOORS AND WINDOWS

08110 - Steel Doors and Frames
08210 - Wood Doors
08330 - Rolling Service Doors
08410 - Aluminum Entrances and Storefronts
08520 - Aluminum Windows
08710 - Finish Hardware
08800 - Glazing

DIVISION 9 - FINISHES

09110 – Metal Stud Framing System
09220 - Portland Cement Plaster
09260 - Gypsum Board System
09300 - Ceramic Tile
09510 – Suspended Acoustical Ceilings
09650 - Resilient Flooring
09900 - Painting
09910 - Painting Fueling System
09970 - Concrete Floor Sealer

DIVISION 10 - SPECIALTIES

10105 - Visual Display Boards
10165 - Toilet Compartments
10350 - Flagpoles
10425 - Signage
10500 - Metal Lockers
10522 - Fire Extinguishers & Cabinets
10800 - Toilet Accessories

DIVISION 11 - EQUIPMENT

11140 - Fuel Dispensing System

DIVISION 12 - FURNISHINGS

12512 - Blinds and Shades

DIVISION 13 - SPECIAL CONSTRUCTION

13120 - Pre-Engineered Buildings

DIVISION 14 - CONVEYING SYSTEMS

Not Used

DIVISION 15 – MECHANICAL

15050 – Basic Mechanical Requirements
15060 – Supports and Anchors
15090 – Piping Insulation
15097 - Ductwork Insulation
15210 – Reciprocating Air Compressors
15400 – Plumbing, Piping, and Associated Materials
15540 – Fuel Fired Heaters
15761 – Ductless Air Conditioning Systems
15767 – Heat Pump Air Conditioning Systems
15810 - Ductwork
15820 – Ductwork Accessories
15830 – Fans
15850 – Air Outlets and Inlets
15950 – Testing, Adjusting, and Balancing

DIVISION 16 – ELECTRICAL

16010 - Basic Electrical Requirements
16060 – Grounding and Bonding
16070 - Electrical Hangers and Supports
16075 – Electrical Identification
16123 – Building Wire and Cable
16130 – Raceway and Boxes
16140 – Wiring Devices
16150 – Wiring Connections
16210 – Electrical Utility Service
16235 – Engine Generators
16411 - Enclosed Switches
16442 – Panelboards
16491 – Fuses
16510 – Interior Luminaries
16530 – Emergency Lighting
16710 – Telecommunications Cabling
16722 - Gas Monitoring System

LIST OF DRAWINGS

TITLE SHEET

ARCHITECTURAL:

G1.1	ABBREVIATIONS AND SYMBOLS
A1.0	OVERALL SITE PLAN
A1.1	SITE PLAN
A1.2	SITE DETAILS
A1.3	SITE DETAILS
A2.1	FLOOR PLAN -Bldg. 1
A2.2	FLOOR PLAN - Bldg. 2
A2.3	FLOOR PLAN - Bldg. 3
A2.4	FLOOR PLAN - Bldg. 4
A3.1	ROOF PLAN - Bldg. 1
A3.2	ROOF PLAN - Bldg. 2
A3.3	ROOF PLAN - Bldg. 3
A3.4	ROOF PLAN - Bldg. 4
A4.1	REFLECTED CEILING PLAN - Bldg. 1
A4.2	REFLECTED CEILING PLAN - Bldg. 2
A4.3	REFLECTED CEILING PLAN - Bldg. 3
A4.4	REFLECTED CEILING PLAN - Bldg. 4
A5.1	EXTERIOR ELEVATIONS – Bldg. 1
A5.2	EXTERIOR ELEVATIONS – Bldg. 1
A5.3	EXTERIOR ELEVATIONS – Bldg. 2
A5.4	EXTERIOR ELEVATIONS - Bldg. 3
A5.5	EXTERIOR ELELATIONS - Bldg. 4
A6.1	INTERIOR ELEVATIONS
A6.2	INTERIOR ELEVATIONS
A6.3	INTERIOR ELEVATIONS
A6.4	INTERIOR ELEVATIONS
A6.5	INTERIOR ELEVATIONS
A7.1	BUILDING SECTIONS
A7.2	BUILDING SECTIONS
A7.3	BUILDING SECTIONS
A8.1	WALL SECTIONS
A8.2	WALL SECTIONS / DETAILS
A8.3	WALL SECTIONS
A8.4	WALL SECTIONS
A8.5	WALL SECTIONS
A8.6	PARTITION TYPES
A9.1	DOOR AND WINDOW SCHEDULE
A9.2	DOOR DETAILS
A9.3	DOOR AND WINDOW DETAILS
A9.4	DETAILS
A11.1	TEXAS ACCESSIBILITY STANDARDS

CIVIL:

C1.0	DEMOLITION / EROSION SEDIMENT
C1.1	GENERAL NOTES
C1.2	DIMENSIONAL PLAN
C2.0	UTILITY PLAN

C3.0	GRADING PLAN
C4.0	UTILITY DETAILS
C5.0	SITE / PAVING / DRAINAGE DETAILS
C6.0	TEMPORARY EROSION CONTROL (1)
C7.0	TEMPORARY EROSION CONTROL (2)

STRUCTURAL:

S1.1	STRUCTURAL NOTES
S2.1	FOUNDATION PLAN – Bldg. 1
S2.2	FOUNDATION PLAN- Bldg. 1
S2.3	FOUNDATION PLAN - Bldg. 2
S2.4	FOUNDATION PLAN - Bldg. 3
S3.1	FOUNDATION DETAILS
S3.2	FOUNDATION DETAILS
S3.3	FOUNDATION DETAILS
S4.1	FRAMING PLAN-Bldg. 1
S4.2	FRAMING PLAN - Bldg. 1
S4.3	FRAMING PLAN - Bldg. 2
S4.4	FRAMING PLAN - Bldg. 3
S4.5	FRAMING SECTIONS

MECHANICAL:

M2.1	MECHANICAL PLAN - Bldg. 1
M2.2	MECHANICAL PLAN – Bldg. 1
M2.3	MECHANICAL PLAN – Bldg. 2
M2.4	MECHANICAL PLAN - Bldg. 3
M4.1	MECHANICAL SCHEDULES
M4.2	MECHANICAL SCHEDULES
M5.1	MECHANICAL DETAILS

PLUMBING:

P2.1	PLUMBING PLAN - Bldg. 1
P2.2	PLUMBING PLAN – Bldg. 1
P2.3	PLUMBING PLAN – Bldg. 2
P3.1	PLUMBING RISER DIAGRAMS
P3.2	PLUMBING RISER DIAGRAMS
P4.1	PLUMBING SCHEDULES
P5.1	PLUMBING DETAILS

ELECTRICAL:

PE1.1	ELECTRICAL AND GAS SITE PLAN
E2.1	LIGHTING PLAN - Bldg. 1
E2.2	LIGHTING PLAN – Bldg. 1
E2.3	LIGHTING PLAN – Bldg. 2
E2.4	LIGHTING PLAN - Bldg. 3
E2.5	POWER PLAN – Bldg. 1
E2.6	POWER PLAN – Bldg. 1
E2.7	POWER PLAN - Bldg. 2
E2.8	POWER PLAN - Bldg. 3

E2.9	GAS DETECTION PLAN - Bldg. 1
E2.91	POWER AND SPECIAL SYSTEMS PLAN - FUEL STATION
E3.1	ELECTRICAL RISER, LEGEND & LIGHTING SCHEDULE
E4.1	ELECTRICAL PANEL BOARD SCHEDULES
E4.2	ELECTRICAL PANEL BOARD SCHEDULES
E5.1	ELECTRICAL DETAILS
EDV	VOICE & DATA DETAILS
FS.2.1	FUEL STATION SCHEDULE & PLAN

SPECIAL PROVISION

000---007

Special Labor Provisions for State Projects

General. This is a "Public Works" Project, as provided under Government Code Title 10, Chapter 2258, "Prevailing Wage Rates", and is subject to the provisions of the Statute. No provisions in the Contract are intended to be in conflict with the provisions of the Statute.

The Texas Transportation Commission has ascertained and indicated in the special provisions the regular rate of per diem wages prevailing in each locality for each craft or type of worker. Apply the wage rates contained in the specifications as minimum wage rates for the Contract.

Minimum Wages, Hours and Conditions of Employment. All workers necessary for the satisfactory completion of the work are within the purview of the Contract.

Whenever and wherever practical, give local citizens preference in the selection of labor.

Do not require any worker to lodge, board or trade at a particular place, or with a particular person as a condition of employment.

Do not charge or accept a fee of any from any person who obtains work on the project. Do not require any person who obtains work on the project to pay any fee to any other person or agency obtaining employment for the person on the project.

Do not charge for tools or equipment used in connection with the duties performed, except for loss or damage of property. Do not charge for necessary camp water.

Do not charge for any transportation furnished to any person employed on the project.

The provisions apply where work is performed by piece work, station work, etc. The minimum wage paid shall be exclusive of equipment rental on any shipment which the worker or subcontractor may furnish in connection with his work.

Take responsibility for carrying out the requirements of this specification and ensure that each subcontractor working on the project complies with its provisions.

Any form of subterfuge, coercion or deduction designated to evade, reduce or discount the established minimum wage scales will be considered a violation of the Contract.

The Fair Labor Standards Acts (FLSA) established one and one-half (1-1/2) pay for overtime in excess of 40 hours worked in 1 week. Do not consider time consumed by the worker in going to and returning from the place of work as part of the hours of work. Do not require or permit any worker to work in excess of 40 hours in 1 week, unless the worker receives compensation at a rate not less than 1-1/2 times the basic rate of pay for all hours worked in excess of 40 hours in the workweek.

The general rates of per diem wages prevailing in this locality for each class and type of workers whose services are considered necessary to fulfill the contract are indicated in the special provisions, and these rates govern as minimum wage rates on this contract. A penalty of $60.00 per calendar day or portion of a calendar day for each worker that is paid less than the stipulated general rates of per diem wages for any work done under the Contract will be deducted. The Department, upon receipt of a complaint by a worker, will determine within 30 days whether good cause exists to believe that the Contractor or a Subcontractor has violated wage rate requirements and notify the parties involved of the findings. Make every effort to resolve the alleged violation within 14 days after notification. The next alternative is submittal to binding arbitration in accordance with the provisions of the Texas General Arbitration Act (Art. 224 et seq., Revised Statutes).

Notwithstanding any other provision of the Contract, covenant and agree that the Contractor and its Subcontractors will pay each of their employees and contract labor engaged in any way in work under the Contract, a wage not less than what is generally known as the "federal minimum wage" as set out in 29 U. S. C. 206 as that Statute may be amended from time to time.

Pay any worker employed whose position is not listed in the Contract, a wage not less than the per diem wage rate established in the Contract for a worker whose duties are most nearly comparable.

Record and Inspections. Keep copies of weekly payrolls for review. Require Subcontractors to keep copies of weekly payrolls for review. Show the name, occupation, number of hours worked each day and per diem wage paid each worker together with a complete record of all deductions made from such wages for a period of 3 years from the date of completion of the Contract.

Where the piece-work method is used, indicate on the payroll for each person involved:

(a) Quantity of piece work performed.
(b) Price paid per piece-work unit.
(c) Total hours employed.

The Engineer may require the Contractor to file an affidavit for each payroll certifying that payroll is a true and accurate report of the full wages due and paid to each person employed.

Post or make available to employees the prevailing wage rates from the Contract. Require Subcontractors to post or make available to employees the prevailing wage rates from the Contract.

SPECIAL PROVISION

000---011

Department Division Mailing and Physical Addresses

For this project, Item 000, "Department Division Mailing and Physical Addresses," of the Standard Specifications, is hereby amended with respect to the clauses cited below, and no other clauses or requirements of this Item are waived or changed hereby.

Use the information in Table 1 to contact the Department Divisions referenced in the Standard Specifications or Special Provisions and Special Specifications in the Contract. This listing is for the purposes of providing addresses for transmission of information in accordance with the specifications. Unless otherwise stated in the specifications, address all correspondence and transmission of information to the Engineer responsible for the oversight of construction. Submit bidding documents to the location shown in the official advertisement. Address changes will be posted on the Department's Internet site at http://www.dot.state.tx.us/.

Table 1
Department Division Mailing and Physical Addresses

Division/Section Name	U.S. Post Office Address	Physical Address
Bridge Division		
	Texas Department of Transportation Bridge Division 125 E 11th Street Austin TX 78701-2483	Bridge Division Fabrication Branch 118 E. Riverside Dr. Austin, Texas 78704 (512) 416-2187
Construction Division		
Construction Section	Texas Department of Transportation Construction Division Construction Section 200 E. Riverside Drive Austin TX 78704	Construction Division 200 E. Riverside Dr. 1st floor, 1B.1 Austin, TX 78704 (512) 416-2490 1-800-687-3525
Materials & Pavements Section	Texas Department of Transportation Construction Division Materials & Pavements (CP51) 125 E 11th Street Austin TX 78701-2483	Construction Division Materials & Pavements Cedar Park Campus, Bldg. 51 9500 Lake Creek Parkway Austin, TX 78717 512-506-5800

Division/Section Name	U.S. Post Office Address	Physical Address
Maintenance Division		
Maintenance Section	Texas Department of Transportation Maintenance Division Maintenance Section 125 E 11th Street Austin, TX 78701	Maintenance Division Maintenance Section 150 East Riverside Drive Fourth Floor, North Tower Austin, TX 78704 (512) 416-3185
Vegetation Management Section	Texas Department of Transportation Maintenance Division Vegetation Management Section 125 E 11th Street Austin, TX 78701	Maintenance Division Vegetation Management Section 150 East Riverside Drive Fourth Floor, North Tower Austin, TX 78704 (512) 416-3093
Traffic Operations Division		
Traffic Operations Division	Texas Department of Transportation Traffic Operations Division 125 E 11th Street Austin TX 78701	Texas Department of Transportation Traffic Operations Division 200 E. Riverside Bldg. 118 Austin, Texas 78704 512-416-3200
Traffic Engineering	Texas Department of Transportation Traffic Operations Division Traffic Engineering Section 125 E 11th Street Austin TX 78701	Texas Department of Transportation Traffic Operations Division Traffic Engineering Section 200 E. Riverside Bldg. 118 Austin, Texas 78704 (512) 416-3118
Traffic Management-ITS Branch	Texas Department of Transportation Traffic Operations Division Traffic Management Section 125 E 11th Street Austin TX 78701	Texas Department of Transportation Traffic Operations Division Traffic Management Section Cedar Park Campus, Bldg. 51 9500 Lake Creek Parkway Austin, TX 78717 512-506-5100
Traffic Management-Signal/Radio Branch	Texas Department of Transportation Traffic Operations Division Traffic Management Section-Signal/Radio Branch 125 E 11th Street Austin TX 78701	Texas Department of Transportation Traffic Operations Division Traffic Management Section-Signal/Radio Branch Cedar Park Campus, Bldg. 51 9500 Lake Creek Parkway Austin, TX 78717 512-506-5100

ITEM 506

TEMPORARY EROSION, SEDIMENTATION, AND ENVIRONMENTAL CONTROLS

506.1. Description. Install, maintain, and remove erosion, sedimentation, and environmental control devices. Remove accumulated sediment and debris.

506.2. Materials.

A. Rock Filter Dams.

1. **Aggregate.** Furnish aggregate with hardness, durability, cleanliness, and resistance to crumbling, flaking, and eroding acceptable to the Engineer. Provide the following:
   - **Types 1, 2, and 4 Rock Filter Dams.** Use 3 to 6 in. aggregate.
   - **Type 3 Rock Filter Dams.** Use 4 to 8 in. aggregate.
2. **Wire.** Provide minimum 20 gauge galvanized wire for the steel wire mesh and tie wires for Types 2 and 3 rock filter dams. Type 4 dams require:
   - a double-twisted, hexagonal weave with a nominal mesh opening of 2-1/2 in. x 3-1/4 in.;
   - minimum 0.0866 in. steel wire for netting;
   - minimum 0.1063 in. steel wire for selvages and corners; and minimum 0.0866 in. for binding or tie wire.
3. **Sandbag Material.** Furnish sandbags meeting Section 506.2.I, "Sandbags," except that any gradation of aggregate may be used to fill the sandbags.

B. Temporary Pipe Slope Drains. Provide corrugated metal pipe, polyvinyl chloride (PVC) pipe, flexible tubing, watertight connection bands, grommet materials, prefabricated fittings, and flared entrance sections that conform to the plans. Recycled and other materials meeting these requirements are allowed if approved.

Furnish concrete in accordance with Item 432, "Riprap."

C. Baled Hay. Provide hay bales weighing at least 50 lb., composed entirely of vegetable matter, measuring 30 in. or longer, and bound with wire, nylon, or polypropylene string.

D. Temporary Paved Flumes. Furnish asphalt concrete, hydraulic cement concrete, or other comparable non-erodible material that conforms to the plans. Provide rock or rubble with a minimum diameter of 6 in. and a maximum volume of 1/2 cu. ft. for the construction of energy dissipaters.

E. Construction Exits. Provide materials that meet the details shown on the plans and this Section.

1. **Rock Construction Exit.** Provide crushed aggregate for long and short-term construction exits. Furnish aggregates that are clean, hard, durable, and free from adherent coatings such as salt, alkali, dirt, clay, loam, shale, soft, or flaky materials and organic and injurious matter. Use 4- to 8-in. aggregate for Type 1 and 2- to 4-in. aggregate for Type 3.
2. **Timber Construction Exit.** Furnish No. 2 quality or better railroad ties and timbers for long-term construction exits, free of large and loose knots and treated to control rot. Fasten timbers with nuts and bolts or lag bolts, of at least 1/2 in. diameter, unless otherwise shown on the plans or allowed. For short-term exits, provide plywood or pressed wafer board at least 1/2 in. thick.
3. **Foundation Course.** Provide a foundation course consisting of flexible base, bituminous concrete, hydraulic cement concrete, or other materials as shown on the plans or directed.

F. Embankment for Erosion Control. Provide rock, loam, clay, topsoil, or other earth materials that will form a stable embankment to meet the intended use.

G. Pipe. Provide pipe outlet material in accordance with Item 556, "Pipe Underdrains," and details shown on the plans.

H. Construction Perimeter Fence.

1. **Posts.** Provide essentially straight wood or steel posts that are at least 60 in. long. Furnish soft wood posts with a minimum diameter of 3 in. or use 2 x 4 boards. Furnish hardwood posts with a minimum cross-section of 1-1/2 x 1-1/5 in. Furnish T- or L-shaped steel posts with a minimum weight of 1.3 lb. per foot.
2. **Fence.** Provide orange construction fencing as approved by the Engineer.
3. **Fence Wire.** Provide 12-1/2 gauge or larger galvanized smooth or twisted wire. Provide16 gauge or larger tie wire.
4. **Flagging.** Provide brightly-colored flagging that is fade-resistant and at least 3/4 in. wide to provide maximum visibility both day and night.
5. **Staples.** Provide staples with a crown at least 1/2 in. wide and legs at least 1/2 in. long.
6. **Used Materials.** Previously used materials meeting the applicable requirements may be used if accepted by the Engineer.

I. Sandbags. Provide sandbag material of polypropylene, polyethylene, or polyamide woven fabric with a minimum unit weight of 4 oz. per square yard, a Mullen burst-strength exceeding 300 psi, and an ultraviolet stability exceeding 70%.

Use natural coarse sand or manufactured sand meeting the gradation given in Table 1 to fill sandbags. Filled sandbags must be 24 to 30 in. long, 16 to 18 in. wide, and 6 to 8 in. thick.

Table 1
Sand Gradation

Sieve #	Maximum Retained (% by Weight)
4	3%
100	80%
200	95%

J. Temporary Sediment Control Fence. Provide a net-reinforced fence using woven geo-textile fabric. Logos visible to the traveling public will not be allowed.

1. **Fabric.** Provide fabric materials in accordance with DMS-6230, "Temporary Sediment Control Fence Fabric."
2. **Posts.** Provide essentially straight wood or steel posts with a minimum length of 48 in., unless otherwise shown on the plans. Soft wood posts must be at least 3 in. in diameter or nominal 2 x 4 in. Hardwood posts must have a minimum cross-section of 1-1/2 x 1-1/2 in. T- or L-shaped steel posts must have a minimum weight of 1.3 lb. per foot.
3. **Net Reinforcement.** Provide net reinforcement of at least 12-1/2 gauge galvanized welded wire mesh, with a maximum opening size of 2 x 4 in., at least 24 in. wide, unless otherwise shown on the plans.
4. **Staples.** Provide staples with a crown at least 3/4 in. wide and legs 1/2 in. long.
5. **Used Materials.** Use recycled material meeting the applicable requirements if accepted by the Engineer.

506.3. Equipment. Provide a backhoe, front end loader, blade, scraper, bulldozer, or other equipment as required when "Earthwork for Erosion Control" is specified on the plans as a bid item.

506.4. Construction.

A. Contractor Responsibilities. Implement the Department's Storm Water Pollution Prevention Plan (SWP3) for the project site in accordance with the specific or general storm water permit requirements. Develop and implement an SWP3 for project-specific material supply plants within and outside of the Department's right of way in accordance with the specific or general storm water permit requirements. Prevent water pollution from storm water associated with construction activity from entering any surface water or private property on or adjacent to the project site.

B. General.

1. **Phasing.** Implement control measures in the area to be disturbed before beginning construction, or as directed. Limit the disturbance to the area shown on the plans or as directed. If, in the opinion of the Engineer, the Contractor cannot control soil erosion and sedimentation resulting from construction operations, the Engineer will limit the disturbed area to that which the Contractor is able to control. Minimize disturbance to vegetation.
2. **Maintenance.** Immediately correct ineffective control measures. Implement additional controls as directed. Remove excavated material within the time requirements specified in the applicable storm water permit.
3. **Stabilization.** Stabilize disturbed areas where construction activities will be temporarily stopped in accordance with the applicable storm water permit. Establish a uniform vegetative cover. The project will not be accepted until a 70% density of existing adjacent undisturbed areas is obtained, unless otherwise shown on the plans. When shown on the plans, the Engineer may accept the project when adequate controls are in place that will control erosion, sedimentation, and water pollution until sufficient vegetative cover can be established.
4. **Finished Work.** Upon acceptance of vegetative cover, remove and dispose of all temporary control measures, temporary embankments, bridges, matting, falsework, piling, debris, or other obstructions placed during construction that are not a part of the finished work, or as directed.
5. **Restricted Activities.** Do not locate disposal areas, stockpiles, or haul roads in any wetland, water body, or streambed.

   Do not install temporary construction crossings in or across any water body without the prior approval of the appropriate resource agency and the Engineer. Restrict construction operations in any water body to the necessary areas as shown on the plans or applicable permit, or as directed. Use temporary bridges, timber mats, or other structurally sound and non-eroding material for stream crossings.

   Provide protected storage area for paints, chemicals, solvents, and fertilizers at an approved location. Keep paints, chemicals, solvents, and fertilizers off bare ground and provide shelter for stored chemicals.

C. Installation, Maintenance, and Removal Work. Perform work in accordance with the specific or general storm water permit. Install and maintain the integrity of temporary erosion and sedimentation control devices to accumulate silt and debris until earthwork construction and permanent erosion control features are in place or the disturbed area has been adequately stabilized as determined by the Engineer. If a device ceases to function as intended, repair or replace the device or portions thereof as necessary. Remove sediment, debris, and litter. When approved, sediments may be disposed of within embankments, or in the right of way in areas where the material will not contribute to further siltation. Dispose of removed material in accordance with federal, state, and local regulations.

Remove devices upon approval or when directed. Upon removal, finish-grade and dress the area. Stabilize disturbed areas in accordance with the permit, and as shown on the plans or directed. The Contractor retains ownership of stockpiled material and must remove it from the project when new installations or replacements are no longer required.

1. **Rock Filter Dams for Erosion Control.** Remove trees, brush, stumps, and other objectionable material that may interfere with the construction of rock filter dams. Place sandbags as a foundation when required or at the Contractor's option.

   For Types 1, 2, 3, and 5, place the aggregate to the lines, height, and slopes specified, without undue voids. For Types 2 and 3, place the aggregate on the mesh and then fold the mesh at the upstream side over the aggregate and secure it to itself on the downstream side with wire ties, or hog rings, or as directed. Place rock filter dams perpendicular to the flow of the stream or channel unless otherwise directed. Construct filter dams according to the following criteria, unless otherwise shown on the plans:

a. **Type 1 (Non-reinforced).**

(1) **Height.** At least 18 in. measured vertically from existing ground to top of filter dam.

(2) **Top Width.** At least 2 ft.

(3) **Slopes.** At most 2:1.

b. **Type 2 (Reinforced).**

(1) **Height.** At least 18 in. measured vertically from existing ground to top of filter dam.

(2) **Top Width.** At least 2 ft.

(3) **Slopes.** At most 2:1.

c. **Type 3 (Reinforced).**

(1) **Height.** At least 36 in. measured vertically from existing ground to top of filter dam.

(2) **Top Width.** At least 2 ft.

(3) **Slopes.** At most 2:1.

d. **Type 4 (Sack Gabions).** Unfold sack gabions and smooth out kinks and bends. For vertical filling, connect the sides by lacing in a single loop–double loop pattern on 4- to 5-in. spacing. At one end, pull the end lacing rod until tight, wrap around the end, and twist 4 times. At the filling end, fill with stone, pull the rod tight, cut the wire with approximately 6 in. remaining, and twist wires 4 times.

For horizontal filling, place sack flat in a filling trough, fill with stone, and connect sides and secure ends as described above.

Lift and place without damaging the gabion. Shape sack gabions to existing contours.

e. **Type 5.** Provide rock filter dams as shown on the plans.

2. **Temporary Pipe Slope Drains.** Install pipe with a slope as shown on the plans or as directed. Construct embankment for the drainage system in 8-in. lifts to the required elevations. Hand-tamp the soil around and under the entrance section to the top of the embankment as shown on the plans or as directed. Form the top of the embankment or earth dike over the pipe slope drain at least 1 ft. higher than the top of the inlet pipe at all points. Secure the pipe with hold-downs or hold-down grommets spaced a maximum of 10 ft. on center. Construct the energy dissipators or sediment traps as shown on the plans or as directed. Construct the sediment trap using concrete or rubble riprap in accordance with Item 432, "Riprap," when designated on the plans.

3. **Baled Hay for Erosion and Sedimentation Control.** Install hay bales at locations shown on the plans by embedding in the soil at least 4 in. and, where possible, approximately 1/2 the height of the bale, or as directed. Fill gaps between bales with hay.

4. **Temporary Paved Flumes.** Construct paved flumes as shown on the plans or as directed. Provide excavation and embankment (including compaction of the subgrade) of material to the dimensions shown on the plans, unless otherwise indicated. Install a rock or rubble riprap energy dissipater, constructed from the materials specified above to a minimum depth of 9 in. at the flume outlet to the limits shown on the plans or as directed.

5. **Construction Exits.** When tracking conditions exist, prevent traffic from crossing or exiting the construction site or moving directly onto a public roadway, alley, sidewalk, parking area, or other right of way areas other than at the location of construction exits. Construct exits for either long or short-term use.

a. **Long-Term.** Place the exit over a foundation course, if necessary. Grade the foundation course or compacted subgrade to direct runoff from the construction exits to a sediment trap as shown on the plans or as directed. Construct exits with a width of at least 14 ft. for one-way and 20 ft. for two-way traffic for the full width of the exit, or as directed.

(1) **Type 1.** Construct to a depth of at least 8 in. using crushed aggregate as shown on the plans or as directed.

(2) **Type 2.** Construct using railroad ties and timbers as shown on the plans or as directed.

b. **Short-Term.**

(1) **Type 3.** Construct using crushed aggregate, plywood, or wafer board. This type of exit may be used for daily operations where long-term exits are not practical.

(2) **Type 4.** Construct as shown on the plans or as directed.

6. **Earthwork for Erosion Control.** Perform excavation and embankment operations to minimize erosion and to remove collected sediments from other erosion control devices.

a. **Excavation and Embankment for Erosion Control Features.** Place earth dikes, swales, or combinations of both along the low crown of daily lift placement, or as directed, to prevent runoff spillover. Place swales and dikes at other locations as shown on the plans or as directed to prevent runoff spillover or to divert runoff. Construct cuts with the low end blocked with undisturbed earth to prevent erosion of hillsides. Construct sediment traps at drainage structures in conjunction with other erosion control measures as shown on the plans or as directed.

Where required, create a sediment basin providing 3,600 cu. ft. of storage per acre drained, or equivalent control measures for drainage locations that serve an area with 10 or more disturbed acres at one time, not including offsite areas.

b. **Excavation of Sediment and Debris.** Remove sediment and debris when accumulation affects the performance of the devices, after a rain, and when directed.

7. **Construction Perimeter Fence.** Construct, align, and locate fencing as shown on the plans or as directed.

a. **Installation of Posts.** Embed posts 18 in. deep or adequately anchor in rock, with a spacing of 8 to 10 ft.

b. **Wire Attachment.** Attach the top wire to the posts at least 3 ft. from the ground. Attach the lower wire midway between the ground and the top wire.

c. **Flag Attachment.** Attach flagging to both wire strands midway between each post. Use flagging at least 18 in. long. Tie flagging to the wire using a square knot.

8. **Sandbags for Erosion Control.** Construct a berm or dam of sandbags that will intercept sediment-laden storm water runoff from disturbed areas, create a retention pond, detain sediment, and release water in sheet flow. Fill each bag with sand so that at least the top 6 in. of the bag is unfilled to allow for proper tying of the open end. Place the sandbags with their tied ends in the same direction. Offset subsequent rows of sandbags 1/2 the length of the preceding row. Place a single layer of sandbags downstream as a secondary debris trap. Place additional sandbags as necessary or as directed for supplementary support to berms or dams of sandbags or earth.

9. **Temporary Sediment-Control Fence.** Provide temporary sediment-control fence near the downstream perimeter of a disturbed area to intercept sediment from sheet flow. Incorporate the fence into erosion-control measures used to control sediment in areas of higher flow. Install the fence as shown on the plans, as specified in this Section, or as directed.

a. **Installation of Posts.** Embed posts at least 18 in. deep, or adequately anchor, if in rock, with a spacing of 6 to 8 ft. and install on a slight angle toward the run-off source.

b. **Fabric Anchoring.** Dig trenches along the uphill side of the fence to anchor 6 to 8 in. of fabric. Provide a minimum trench cross-section of 6 x 6 in. Place the fabric against the side of the trench and align approximately 2 in of fabric along the bottom in the upstream direction. Backfill the trench, then hand-tamp.

c. **Fabric and Net Reinforcement Attachment.** Unless otherwise shown under the plans, attach the reinforcement to wooden posts with staples, or to steel posts with T-clips, in at least 4 places equally spaced. Sewn vertical pockets may be used to attached reinforcement to end posts. Fasten the fabric to the top strand of reinforcement by hog rings or cord every 15 in. or less.

d. **Fabric and Net Splices.** Locate splices at a fence post with a minimum lap of 6 in. attached in at least 6 places equally spaced, unless otherwise shown under the plans. Do not locate splices in concentrated flow areas.

Requirements for installation of used temporary sediment-control fence include the following:

- fabric with minimal or no visible signs of biodegradation (weak fibers),
- fabric without excessive patching (more than 1 patch every 15 to 20 ft.),
- posts without bends, and
- backing without holes.

506.5. Measurement.

A. **Rock Filter Dams.** Installation or removal of rock filter dams will be measured by the foot or by the cubic yard. The measured volume will include sandbags, when used.

1. **Linear Measurement.** When rock filter dams are measured by the foot, measurement will be along the centerline of the top of the dam.
2. **Volume Measurement.** When rock filter dams are measured by the cubic yard, measurement will be based on the volume of rock computed by the method of average end areas.
   a. **Installation.** Measurement will be made in final position.
   b. **Removal.** Measurement will be made at the point of removal.

B. **Temporary Pipe Slope Drains.** Temporary pipe slope drains will be measured by the foot.

C. **Baled Hay.** Baled hay will be measured by each bale.

D. **Temporary Paved Flumes.** Temporary paved flumes will be measured by the square yard of surface area. The measured area will include the energy dissipater at the flume outlet.

E. **Construction Exits.** Construction exits will be measured by the square yard of surface area.

F. **Earthwork for Erosion Control.**

1. **Equipment.** Equipment use will be measured by the actual number of hours the equipment is operated.
2. **Volume Measurement.**
   a. **In Place.**
      (1) **Excavation.** Excavation will be measured by the cubic yard in its original position and the volume computed by the method of average end areas.
      (2) **Embankment.** Embankment will be measured by the cubic yard in its final position by the method of average end areas. The volume of embankment will be determined between:
         - the original ground surfaces or the surface upon that the embankment is to be constructed for the feature and
         - the lines, grades and slopes of the accepted embankment for the feature.
   b. **In Vehicles.** Excavation and embankment quantities will be combined and paid for under "Earthwork (Erosion and Sediment Control, In Vehicles)." Excavation will be measured by the cubic yard in vehicles at the point of removal. Embankment will be measured by the cubic yard in vehicles measured at the point of delivery. Shrinkage or swelling factors will not be considered in determining the calculated quantities.

G. **Construction Perimeter Fence.** Construction perimeter fence will be measured by the foot.

H. **Sandbags for Erosion Control.** Sandbags will be measured as each sandbag or by the foot along the top of sandbag berms or dams.

I. **Temporary Sediment-Control Fence.** Temporary sediment-control fence will be measured by the foot.

506.6. Payment. The following will not be paid for directly but are subsidiary to pertinent Items:

- erosion-control measures for Contractor project-specific locations (PSLs) inside and outside the right of way (such as construction and haul roads, field offices, equipment and supply areas, plants, and material sources);
- removal of litter;
- repair to devices and features damaged by Contractor operations;
- added measures and maintenance needed due to negligence, carelessness, lack of maintenance, and failure to install permanent controls;
- removal and reinstallation of devices and features needed for the convenience of the Contractor;
- finish grading and dressing upon removal of the device; and
- minor adjustments including but not limited to plumbing posts, reattaching fabric, minor grading to maintain slopes on an erosion embankment feature, or moving small numbers of sandbags.

The Contractor will be reimbursed in accordance with pertinent Items or Article 9.5, "Force Account," for maintenance, repair, or reinstallation of devices and features when the need for additional control measures cannot be attributed to the above, as determined by the Engineer. Stabilization of disturbed areas will be paid for under pertinent Items.

Furnishing and installing pipe for outfalls associated with sediment traps and ponds will not be paid for directly but is subsidiary to the excavation and embankment under this Item.

A. Rock Filter Dams. The work performed and materials furnished in accordance with this Item and measured as provided under "Measurement" will be paid for at the unit price bid as follows:

1. **Installation.** Installation will be paid for as "Rock Filter Dams (Install)" of the type specified. This price is full compensation for furnishing and operating equipment, finish backfill and grading, lacing, proper disposal, labor, materials, tools, and incidentals.
2. **Removal.** Removal will be paid for as "Rock Filter Dams (Remove)." This price is full compensation for furnishing and operating equipment, proper disposal, labor, materials, tools, and incidentals.

When the Engineer directs that the rock filter dam installation or portions thereof be replaced, payment will be made at the unit price bid for "Rock Filter Dams (Remove)" and for "Rock Filter Dams (Install)" of the type specified. This price is full compensation for furnishing and operating equipment, finish backfill and grading, lacing, proper disposal, labor, materials, tools, and incidentals

B. Temporary Pipe Slope Drains. The work performed and materials furnished in accordance with this Item and measured as provided under "Measurement" will be paid for at the unit price bid for "Temporary Pipe Slope Drains" of the size specified. This price is full compensation for furnishing materials, removal and disposal, furnishing and operating equipment, labor, tools, and incidentals.

Removal of temporary pipe slope drains will not be paid for directly but is subsidiary to the installation Item. When the Engineer directs that the pipe slope drain installation or portions thereof be replaced, payment will be made at the unit price bid for "Temporary Pipe Slope Drains" of the size specified, which is full compensation for the removal and reinstallation of the pipe drain.

Earthwork required for the pipe slope drain installation, including construction of the sediment trap, will be measured and paid for under Section 506.5.F, "Earthwork for Erosion and Sediment Control."

Riprap concrete or stone, when used as an energy dissipater or as a stabilized sediment trap, will be measured and paid for in accordance with Item 432, "Riprap."

C. Baled Hay. The work performed and materials furnished in accordance with this Item and measured as provided under "Measurement" will be paid for at the unit price bid for "Baled Hay." This price is full compensation for furnishing and placing bales, excavating trenches, removal and disposal, equipment, labor, tools, and incidentals.

When the Engineer directs that the baled hay installation (or portions thereof) be replaced, payment will be made at the unit price bid for "Baled Hay," which is full compensation for removal and reinstallation of the baled hay.

D. Temporary Paved Flumes. The work performed and materials furnished in accordance with this Item and measured as provided under "Measurement" will be paid for at the unit price bid for "Temporary

Paved Flume (Install)" or "Temporary Paved Flume (Remove)." This price is full compensation for furnishing and placing materials, removal and disposal, equipment, labor, tools, and incidentals.

When the Engineer directs that the paved flume installation or portions thereof be replaced, payment will be made at the unit prices bid for "Temporary Paved Flume (Remove)" and "Temporary Paved Flume (Install)." These prices are full compensation for the removal and replacement of the paved flume and for equipment, labor, tools, and incidentals.

Earthwork required for the paved flume installation, including construction of a sediment trap, will be measured and paid for under Section 506.5.F, "Earthwork for Erosion and Sediment Control."

E. Construction Exits. Contractor-required construction exits from off-right of way locations or on-right of way PSLs will not be paid for directly but are subsidiary to pertinent Items.

The work performed and materials furnished in accordance with this Item and measured as provided under "Measurement" for construction exits needed on right of way access to work areas required by the Department will be paid for at the unit price bid for "Construction Exits (Install)" of the type specified or "Construction Exits (Remove)." This price is full compensation for furnishing and placing materials, excavating, removal and disposal, cleaning vehicles, labor, tools, and incidentals.

When the Engineer directs that a construction exit or portion thereof be removed and replaced, payment will be made at the unit prices bid for "Construction Exit (Remove)" and "Construction Exit (Install)" of the type specified. These prices are full compensation for the removal and replacement of the construction exit and for equipment, labor, tools, and incidentals.

Construction of sediment traps used in conjunction with the construction exit will be measured and paid for under Section 506.5.F, "Earthwork for Erosion and Sediment Control."

F. Earthwork for Erosion and Sediment Control. The work performed and materials furnished in accordance with this Item and measured as provided under "Measurement" will be paid for at the unit price bid for "Excavation (Erosion and Sediment Control, In Place)," "Embankment (Erosion and Sediment Control, In Place)," "Earthwork (Erosion and Sediment Control, In Vehicles)," "Dragline Work (Erosion and Sediment Control)," "Backhoe Work (Erosion and Sediment Control)," "Excavator Work (Erosion and Sediment Control)," "Front End Loader Work (Erosion and Sediment Control)," "Blading Work (Erosion and Sediment Control)," "Scraper Work (Erosion and Sediment Control)," or "Bulldozer Work (Erosion and Sediment Control)."

This price is full compensation for excavation including removal of accumulated sediment in various erosion control installations as directed, hauling, and disposal of material not used elsewhere on the project; excavation for construction of erosion-control features; embankments including furnishing material from approved sources and construction of erosion-control features; sandbags; plywood; stage construction for curb inlets involved in curb-inlet sediment traps; and equipment, labor; tools, and incidentals.

Earthwork needed to remove and obliterate of erosion-control features will not be paid for directly but is subsidiary to pertinent Items unless otherwise shown on the plans.

Sprinkling and rolling required by this Item will not be paid for directly, but will be subsidiary to this Item.

G. Construction Perimeter Fence. The work performed and materials furnished in accordance with this Item and measured as provided under "Measurement" will be paid for at the unit price bid for "Construction Perimeter Fence." This price is full compensation for furnishing and placing the fence; digging, fence posts, wire, and flagging; removal and disposal; and materials, equipment, labor, tools, and incidentals.

Removal of construction perimeter fence will be not be paid for directly but is subsidiary to the installation Item. When the Engineer directs that the perimeter fence installation or portions thereof be removed and replaced, payment will be made at the unit price bid for "Construction Perimeter Fence," which is full compensation for the removal and reinstallation of the construction perimeter fence.

H. Sandbags for Erosion Control. Sandbags will be paid for at the unit price bid for "Sandbags for Erosion Control" (of the height specified when measurement is by the foot). This price is full compensation for materials, placing sandbags, removal and disposal, equipment, labor, tools, and incidentals.

Removal of sandbags will not be paid for directly but is subsidiary to the installation Item. When the Engineer directs that the sandbag installation or portions thereof be replaced, payment will be made at the unit price bid for "Sandbags for Erosion Control," which is full compensation for the reinstallation of the sandbags.

I. Temporary Sediment-Control Fence. The work performed and materials furnished in accordance with this Item and measured as provided under "Measurement" will be paid for at the unit price bid for "Temporary Sediment-Control Fence." This price is full compensation for furnishing and placing the fence; trenching, fence posts, fabric and backfill; removal and disposal; and equipment, labor, tools, and incidentals.

Removal of temporary sediment-control fence will not be paid for directly but is subsidiary to the installation Item. When the Engineer directs that the temporary sedimentation control fence installation or portions thereof be replaced, payment will be made at the unit price bid for "Temporary Sediment-Control Fence," which is full compensation for the removal and reinstallation of the temporary sediment-control fence.

SECTION 01002
DEFINITIONS AND STANDARDS

PART 1 - GENERAL

1.01 RELATED DOCUMENTS

A. Drawings and general provisions of Contract, including General and Supplementary Conditions and other Division 1 Specification Sections, apply to this Section.

1.02 SUMMARY

This section specifies administrative requirements for compliance with governing regulations, codes and standards.

A. Requirements include obtaining permits, licenses, inspections, releases and similar documentation, as well as payments, statements and similar requirements associated with regulations, codes and standards.

1.03 DEFINITIONS

A. General: Definitions contained in this Article are not necessarily complete, but are general to the extent that they are not defined more explicitly elsewhere in the Contract documents.

B. Indicated: Refers to graphic representations, notes or schedules on the Drawings, or other Paragraphs or Schedules in Specifications, and similar requirements in Contract Documents. Where terms such as "shown," "noted," "scheduled," and "specified" are used, it is to help locate the reference; not limitation on location is intended except as specifically noted.

C. Directed: Terms such as "directed," "requested," "authorized," "selected," "approved," "required," and "permitted" mean "directed by the Architect/Engineer," "requested by the Architect/Engineer," and similar phrases. However, no implied meaning shall be interpreted to extend the Architect/Engineer's responsibility into the Contractor's area of construction supervision.

D. Approve: The term "approved" where used in conjunction with the Architect/Engineer's action on the Contractor's submittals, applications, and requests, is limited to the responsibilities and duties of the Architect/Engineer stated in General and Supplementary Conditions. Such approval shall not release the Contractor from responsibility to fulfill Contract Document requirements, unless otherwise provided in the Contract Documents.

E. Regulation: The term "Regulations" includes laws, statutes, ordinances and lawful orders issued by authorities having jurisdiction, as well as rules, conventions and agreements within the construction industry that control performance of the Work, whether they are lawfully imposed by authorities having jurisdiction or not.

F. Furnish: The term "furnish" is used to mean "supply and deliver to the Project site, ready for unloading, unpacking, assembly, installation, and similar operations."

G. Install: The term "install" is used to describe operations at project site including the actual "unloading, unpacking, assembly, erection, placing, anchoring, applying, working to dimension, finishing, curing, protecting, cleaning and similar operations.

H. Provide: The term "provide" means "to furnish and install, complete and ready for use".

I. Installer: An "Installer" is an entity engaged by the Contractor, either as an employee, subcontractor or sub-subcontractor for performance of a particular construction activity, including installation, erection, application and similar operations. Installers are required to be experienced in the construction they are engaged to perform.
   1. The term "experienced," when used with the term "Installer" means having a minimum of 5 previous Projects similar in size and scope to this Project and familiar with the precautions required, and has complied with requirements of the authority having jurisdiction.

J. Project Site_is the space available to the Contractor for performance of the Work, either exclusively or in conjunction with others performing other construction as part of the Project. The extent of the Project Site is shown on the Drawings, and may or may not be identical with the description of the land upon which the Project is to be built.

K. Testing Laboratories: A "testing laboratory" is an independent entity engaged to perform specific inspections or tests, either at the Project Site or elsewhere, and to report on, and, if required, to interpret results of those inspections or tests.

1.04 SPECIFICATION FORMAT AND CONTENT EXPLANATION

This Article is provided to help the user of these specifications understand the format, language, implied requirements, and similar conventions. None of the explanations shall be interpreted to modify the substance of Contract requirements.

A. Specification Format: These Specifications are organized into Divisions, Sections or Trade Headings based on the Construction Specifications Institute's 16 Division format and the MASTERFORMAT numbering system. This organization conforms generally to recognize construction industry practice.

B. Specification Content: This Specification has been produced employing conventions in the use of language and the intended meaning of certain terms, words, and phrases when used in particular situations or circumstances. These conventions are explained as follows:
   1. Language used in the Specifications and other Contract Documents is the abbreviated type. Implied words and meanings will be appropriately interpreted. Singular words will be interpreted as plural and plural words interpreted as singular where applicable and where the full context of the Contract Documents so indicates.
   2. Imperative Language is used generally in the Specifications. Requirements expressed imperatively are to be performed by the Contractor. At certain locations in the text, for clarity, subjective language is used to describe responsibilities that must be fulfilled indirectly by the Contractor or by others when so noted.

C. Assignment of Specialists: The Specifications requires that certain specific Construction activities shall be performed by specialists who are recognized experts in the operations to be performed. The specialists must be engaged for those activities, and the assignments are requirements over which the Contractor has no choice or option. Nevertheless, the ultimate responsibility for fulfilling Contract requirements remains with the Contractor.

1. This requirement shall not be interpreted to conflict with enforcement of building codes and similar regulations governing the Work. It is also not intended to interfere with local trade union jurisdictional settlements and similar conventions.
2. Trades: Use of titles such as "carpentry" is not intended to imply that certain construction activities must be performed by accredited or unionized individuals of a corresponding generic name, such as "carpenter". It also does not imply that requirements specified apply exclusively to trades persons of the corresponding generic name.

1.05 DRAWING SYMBOLS

A. Graphic Symbols used on the Drawings are those recognized in the construction industry for purposes indicated. Where not otherwise noted, symbols are defined by "Architectural Graphic Standards," published by John Wiley & Sons, Inc., seventh edition.

B. Mechanical/Electrical Drawings: Graphic symbols used on mechanical and electrical Drawings are generally aligned with symbols recommended by ASHRAE. Where appropriate, they are supplemented by more specific symbols recommended by technical associations including, ASME, ASPE, IEEE and similar organizations. Refer instances of uncertainty to the Architect/Engineer for clarification before proceeding.

1.06 INDUSTRY STANDARDS

A. Applicability of Standards: Except where Contract Documents include more stringent requirements, applicable construction industry standards have the same force and effect as if bound or copied directly into Contract Documents. Such standards are made a part of the Contract Documents by reference. Individual Sections indicate which codes and standards the Contractor must keep available at the Project Site for reference.
   1. Referenced standards take precedence over standards that are not referenced but recognized in the construction industry as applicable.
   2. Non-referenced standards are not directly applicable to the Work, except as a general requirement of whether the Work complies with construction industry standards.
   3. Non-referenced standards: Except as otherwise limited by the Contract Documents, standards not referenced by recognized in the industry as applicable will be enforced for performance of the Work. The Architect/Engineer will decide whether a code or standard is applicable, or which of several are applicable.

B. Publication Dates: Where compliance with an industry standard is required, comply with standard in effect as of date of Contract Documents.
   1. Updated Standards: At the request of the Architect/Engineer, Contractor or authority having jurisdiction, submit a Change Order proposal where an applicable code or standard has been revised and reissued after the date of the Contract Documents and before performance of Work affected. The Architect/Engineer will decide whether to issue a Change Order to proceed with the updated standard.

C. Conflicting Requirements: Where compliance with two or more standards is specified, and they establish different or conflicting requirements for minimum quantities or quality levels, the most stringent requirement will be enforced, unless the Contract Documents indicate otherwise. Refer requirements that are different, but apparently equal, and uncertainties as to which quality level is more stringent to the Architect/Engineer for a decision before proceeding.
   1. Minimum Quantities or Quality Levels: In every instance the quantity or quality level shown or specified shall be the minimum to be provided or performed. The actual

installation may comply exactly, within specified tolerances, with the minimum quantity or quality specified, or it may exceed that minimum within reasonable limits. In complying with these requirements, indicated numeric values are minimum or maximum values, as noted, or appropriate for the context of the requirements. Refer instances of uncertainty to the Architect/Engineer for decision **before** proceeding.

D. Copies of standards: Each entity engaged in construction on the Project is required to be familiar with industry standards applicable to that entities' Construction activity. Copies of applicable standards are not bound with the Contract Documents.
   1 Where copies of standards are needed for performance of a required construction activity, the Contractor shall obtain copies directly from the publication source.
   2. Although copies of standards needed for enforcement of requirements may be part of required submittals, the Architect/Engineer reserves the right to require the Contractor to submit additional copies as necessary for enforcement of requirements.

E. Abbreviations and Names: Trade association names and titles of general standards are frequently abbreviated. Where acronyms or abbreviations are used in the Specifications or other Contract Documents, they mean the recognized name of the trade association, standards generating organization, authority having jurisdiction or other entity applicable to the context of the text provision. Refer to the "Encyclopedia of Associations," published by Gale Research Co., available in most libraries.

F. Abbreviations and Names: Trade association names and titles of general standards are frequently abbreviated. The following acronyms as referenced in Contract Documents are defined to mean the associated names. Names and addresses are subject to change, and are believed to be, but are not assured to be, accurate as of date of Contract Documents:

1.	AASHTO	American Association of State Highway and Transportation Officials 444 No. Capitol St., Suite 225, Washington, DC 20001	202-624-5800
2.	ACI	American Concrete Institute, P. O. Box 19150 Detroit, MI 48219	313-532-2600
3.	ACIL	American Council of Independent Laboratories 1725 K Street, NW Washington, DC 20006	202-887-5872
4.	ACPA	American Concrete Pipe Association 8320 Old Courthouse Road Vienna, VA 22180	703-821-1990
5.	AGA	American Gas Association 1515 Wilson Blvd. Arlington, VA 22209	703-841-8400
6.	AI	Asphalt Institute Asphalt Institute Building College Park, MD 20740	301-277-4258
7.	AIA	American Institute of Architects 1735 New York Ave., NW Washington, DC 20006	202-626-7300
8.	AIHA	American Industrial Hygiene Association 475 Wolf Ledges Parkway Akron, OH 44311	216-762-7294
9.	AISC	American Institute of Steel Construction	

		400 No. Michigan Ave., 8th Floor Chicago, IL 60611	312-670-2400
10.	AISI	American Iron and Steel Institute 1000 Sixteenth St., N.W. Washington, DC 20036	202-452-7100
11.	ALI	Associated Laboratories 641 So. Vermont Street Palatine, IL 60067	312-358-7400
12.	ANSI	American National Standards Institute 1430 Broadway New York, NY 10018	212-354-3300
13.	API	American Petroleum Institute 1220 L Street, N.W. Washington, DC 20005	202-682-8000
14.	ASC	Adhesive and Sealant Council 1500 Wilson Blvd., Suite 515 Arlington, VA 22209	703-841-1112
15.	ASME	American Society of Mechanical Engineers 345 East 47th St. New York, New York 10017	212-705-7722
16.	ASPE	American Society of Plumbing Engineers 3617 Thousand Oaks Blvd., Suite 210 Westlake, CA 91362	805-495-7120
17.	ASSE	American Society of Sanitary Engineering P. O. Box 40362 Bay Village, OH 44140	216-835-3040
18.	ASTM	ASTM 1916 Race St. Philadelphia, PA 19103	215-599-5400
19.	AWS	American Welding Society P. O. Box 351040 550 Le Jeune Road, NW Miami, FL 33135	305-443-9353
20.	AWWA	American Water Works Association 6666 W. Quincy Ave. Denver, CO 80235	303-794-7711
21.	CRSI	Concrete Reinforcing Steel Institute 933 Plum Grove Road Schaumburg, IL 60195	312-490-1700
22.	IEEE	Institute of Electrical and Electronic Engineers 345 E. 47th St. New York, NY 10017	
23.	ISA	Instrument Society of America P. O. Box 12277 67 Alexander Drive Research Triangle Park, NC 27709	919-549-8411
24.	LPI	Lightning Protection Institute P. O. Box 458 Harvard, IL 60033	815-943-7211
25.	MCAA	Mechanical Contractor's Association of America	

		5410 Grosvenor Lane, Suite 120 Bethesda, MD 20814	301-897-0770
26.	MSS	Manufacturers Standardization Society of the Valve and Fittings Industry 127 Park St., NE Vienna, VA 22180	703-281-6613
27.	NAPA	National Asphalt Pavement Association Calvert Building, Suite 620 6811 Kenilworthy Ave. Riverdale, MD 20737	301-779-4880
28.	NEC	National Electric Code (by NFPA)	
29.	NECA	National Electrical Contractors Association 7315 Wisconsin Ave. Bethesda, MD 20814	301-657-3110
30.	NEMA	National Electrical Manufacturers Association 2101 L Street, NW, Suite 300 Washington, DC 20037	202-457-8400
31.	NFPA	National Fire Protection Association Batterymarch Park Quincy, MA 02269	617-770-3000
32.	NPCA	National Paint and Coatings Association 1500 Rhode Island Ave., NW Washington, DC 20005	202-462-6272
33.	PDI	Plumbing and Draining Institute (c/o Austin O. Roche, Jr.) 5342 Boulevard Pl. Indianapolis, IN 46208	317-251-5298
34.	PEI	Petroleum Equipment Institute 6514 East 69th St. Tulsa, OK 74133-1719	918-494-9696
35.	SSPC	Steel Structures Painting Council 4400 Fifth Avenue Pittsburgh, PA 15213	412-578-3327
36.	UL	Underwriters Laboratories 333 Pfingsten Rd. Northbrook, IL 60062	312-272-8800
37.	WRI	Wire Reinforcement Institute 8361 A Greensboro Drive McLean, VA 22102	703-790-9790
38.	WSC	Water Systems Council 600 S. Federal St., Suite 400 Chicago, IL 60605	312-922-6222
39.	WWPA	Woven Wire Products Association 2515 No. Nordica Ave. Chicago, IL 60635	312-637-1359

G. Federal Government Agencies: Names and titles of federal government standard or Specification producing agencies are frequently abbreviated. The following acronyms or abbreviations referenced in the Contract Documents indicate names of standard or Specification

producing agencies of the federal government. Names and addresses are subject to change, but are believed to be, but are not assured to be, accurate and up-to-date as of the date of the Contract Documents.

1.	CE	Corps of Engineers (US Dept. of the Army) Chief of Engineers - Referral Washington, DC 20314	202-693-6456
2.	CFR	Code of Federal Regulations Available from the Government Printing Office North Capitol Street Between G and H Streets, NW Washington, DC 20402 (Material is usually first published in the Federal Register)	202-783-3238
3.	CPSC	Consumer Product Safety Commission 1111 Eighteenth St., NW Washington, DC 20207	202-634-7700
4.	CS	Commercial Standard US Dept. of Commerce Government Printing Office Washington, DC 20402	202-377-2000
5.	DOC	Department of Commerce 14th St and Constitution Ave., NW Washington, DC 20230	202-377-2000
6.	DOT	Department of Transportation 400 Seventh St. SW Washington, DC 20590	202-426-4000
7.	EPA	Environmental Protection Agency 401 M St., SW Washington, DC 20460	202-829-3535
8.	FS	Federal Specification (General Services Administration) Specifications Unit (WFSIS) 7th and D St., SW Washington, DC 20406	202-472-2205 202-472-2140
9.	GSA	General Services Administration F Street and 18th St., NW Washington, DC 20405	202-655-400
10.	MIL	Military Standardization Documents (US Department of Defense) Naval Publications and Forms Center 5801 Tabor Ave. Philadelphia, PA 19120	
11.	NBS	National Bureau of Standards (US Dept. of Commerce) Gaithersburg, MD 20234	301-921-1000
12.	OSHA	Occupational Safety and Health Administration (US Dept. of Labor) Government Printing Office Washington, DC 20402	202-783-3238
13.	PS	Product Standard of NBS	

(US Dept. of Commerce)
Government Printing Office
Washington, DC 20402 202-783-3238

1.07 GOVERNING REGULATIONS/AUTHORITIES:

The Architect/Engineer has contacted authorities having jurisdiction where necessary to obtain information necessary for the preparation of Contract Documents; that information may or may not be of significance to the Contractor. Contact authorities having jurisdiction directly for information and decisions having a bearing on the Work.

A. Copies of Correspondence: During preparation of the Contract Documents, the Architect/Engineer has maintained a file containing correspondence with authorities having jurisdiction. This file is available at the Architect/Engineer's office for reference. If requested, the Architect/Engineer will provide copies of correspondence at cost of reproduction.

B. Copies of Regulations: Obtain copies of the following regulations and retain at the Project Site, available for reference by parties who have a reasonable need for such reference.

C. Trade Union Jurisdictions: The Contractor shall maintain, and require subcontractors to maintain complete current information on jurisdictional matters, regulations and pending actions, as applicable to construction activities. The manner in which Contract Documents have been organized and subdivided is not intended to indicate of trade union or jurisdictional agreements.
   1. Discuss new developments at Project meetings at the earliest feasible dates. Record relevant information and actions agreed upon.
   2. Assign and subcontract construction activities, and employ tradesmen and laborers, in a manner that will not unduly risk jurisdictional disputes that could result in conflicts, delays, claims and losses.

1.08 SUBMITTALS

A. Permits, Licenses, and Certificates: For the Owner's records, submit copies of permits, licenses, certifications, inspection reports, releases, jurisdictional settlements, notices, receipts for fee payments, judgments, and similar documents, correspondence and records established in conjunction with compliance with standards and regulations bearing upon performance of the Work.

PART 2 - PRODUCTS

Not Applicable

PART 3 - EXECUTION

Not Applicable

END OF SECTION

SECTION 01004
SPECIFICATION OUTLINE

PART 1 - GENERAL

1.01 SUMMARY

A. The purpose of this section is to describe the organization and format to which the Specification has been prepared. This section is intended as an aid to the comprehension of the specification.

1.02 SPECIFICATION FORMAT

A. The Specification has been prepared in accordance with Construction Specifications Institute (CSI) Format

B. The CSI format is subdivided into 16 major divisions. Divisions form the framework of this Specification and contain the technical requirements for the category of work within each division. Divisions that are not applicable to this specification are not used.

C. Sections within each division describe the specific requirements for different units of work based on trade or type of work. Sections within divisions are arranged in numerical order; however, section numbers may be assigned differently in separate divisions. Page numbering is subordinate to section numbering.

D. Sections are sub-divided into three distinct groupings of related information as follows:
   1. Part 1 - GENERAL: Defines the administrative and procedural requirements unique to the section.
   2. Part 2 - PRODUCTS: Details the quality and features of items required for the project.
   3. Part 3 - EXECUTION: Details the incorporation of the products into the project.

   Most sections contain all three sub-divisions; however, they are included only where needed. Paragraph designations are subordinate to sub-divisions.

E. Many sections do not stand alone and are related to other portions of the Subcontract documents. Some sections are specific extensions of, or are governed by the general requirements of Division 1. Requirements of the Subcontract Documents shall apply as a whole, regardless of any overlapping of various portions of the specification.

F. This specification has been written in the imperative mood and, in some cases, in a streamlined form. The imperative language is directed to the Contractor, unless specifically noted otherwise.

1.03 CLARIFICATIONS

A. Most sections begin with a paragraph in Part 1 entitled "Summary" or "Scope of Work". These paragraphs provide a brief description of the work specified in that Section. These descriptions are not intended to be all-inclusive, but provide a brief clarification of the particular subject matter in the specification.

B. Some technical sections contain a paragraph entitled "Related Sections" or "Related Work Specified Elsewhere". This paragraph lists some of the related work specified in other sections

SECTION 01010
SUMMARY OF WORK

PART 1 - GENERAL

1.01 SUMMARY

A. Project identification:

TEXAS DEPARTMENT OF TRANSPORTATION
AUSTIN DISTRICT, TRAVIS COUNTY
South Travis Area Engineer & Maintenance Facility
26.238 acres out of Santiago Del Valle Grant, Abstract No. 24
Travis County, Austin, Texas

B. Project summary:
1. This project consists of Four buildings and all related site work. Major components of site work consist of site roadways, parking lots, asphalt paving, concrete driveways, concrete curb and gutter, security fencing and gates, concrete walks, drainage structures and connection of building to utility systems.

   Building 1: Office Building. Slab on grade foundation, with a pre-engineered metal building structure with roof purlins, roof insulation board and standing seam metal roof, metal studs and stone veneer exterior wall, forced air DX heating and cooling system.

   Building 2: Maintenance. Connected to Building 1. Slab on grade foundation. Pre-engineered metal building structure with roof purlins, standing seam metal roof and metal wall panels, infrared heating in Shop and Storage areas, compressed air distribution system, and ventilation system.

   Building 3. Laboratory/Storage. Connected to Building 1 with breezeway. Slab on grade foundation. Pre-engineered metal building structure with roof purlins, standing seam metal roof and metal wall panels, forced air DX heating and cooling in Lab and related spaces.

   Building 4. Vehicle Storage. Slab on grade foundation. Pre-engineered metal building structure with roof purlins, standing seam metal roof and metal wall panels.

C. Particular project requirements:
1. Concurrent work by Owner or others: Owner reserves the right to conduct minor work with his own forces or separate contractors during the construction. Work will be coordinated with the contractor.
2. Contractor will have unrestricted access to site.

D. Permits and Fees: Apply for, obtain, and pay for permits, if applicable, fees, and utility company back charges required to perform the work. Submit copies to Owner.

E. Codes: Comply with applicable codes and regulations of authorities having jurisdiction. Submit copies of inspection reports, notices and similar communications to Owner. Primary code is the International Building Code, 2003.

F. Dimensions: Verify dimensions indicated on drawings with field dimensions before fabrication or ordering of materials. Do not scale drawings.

G. Existing Conditions: Notify Owner of existing conditions differing from those indicated on the drawings. Do not remove or alter structural components without prior written approval.

H. Coordination:
   1. Coordinate the work of all trades.
   2. Prepare coordination drawings for areas above ceilings where close tolerances are required between building elements and mechanical and electrical work.
   3. Verify location of utilities and existing conditions prior to beginning work.

I. Installation Requirements, General:
   1. Inspect substrates and report unsatisfactory conditions in writing.
   2. Do not proceed until unsatisfactory conditions have been corrected.
   3. Take field measurements prior to fabrication where practical. Form to required shapes and sizes with true edges, lines and angles. Provide inserts and templates as needed for work of other trades.
   4. Install materials in accordance with manufacturer's instructions and approved submittals.
   5. Install materials in proper relation with adjacent construction and with proper appearance.
   6. Restore units damaged during installation. Replace units which cannot be restored at no additional expense to the Owner.
   7. Refer to additional installation requirements and tolerances specified under individual specification sections.

J. Definitions:
   1. Provide: Furnish and install, complete with all necessary accessories, ready for intended use. Pay for all related costs.
   2. Approved: Acceptance of item submitted for approval. Not a limitation or release for compliance with the Contract Documents or regulatory requirements. Refer to limitations of 'Approved' in General and Supplementary Conditions.

K. Intent: Drawings and specifications are intended to provide the basis for proper completion of the work suitable for the intended use. Anything not expressly set forth but which is reasonable implied or necessary for proper performance of the project shall be included.

L. Writing style: Specifications are written in the imperative mode. Except where specifically intended otherwise, the subject of all imperative statements is the Contractor. For example, 'Provide tile' means 'Contractor shall provide tile.'

PART 2 - PRODUCTS

Not applicable to this section.

PART 3 – EXECUTION

Not applicable to this section.

END OF SECTION

of the Subcontract Documents. These listings are not intended to be all-inclusive. They are presented as a means of aiding the Subcontractor in locating other specification sections containing work that has a close relationship with the work specified in that section. The requirements of the Subcontract Documents, including all specifications, shall apply as a whole.

C. Reference standards are incorporated into the specifications by reference number, title or other designations. The provisions of these standards become a part of the specification as though included in their entirety. When there is a conflict or discrepancy between a reference standard and the specification or with another reference standard, the more stringent requirements shall apply.
D. In the event of a Discrepancy between a drawing and the specification, the specification shall govern.

E. No typographical or other error on drawings shall relieve the Sub-Contractor from his responsibility to perform the intent of this Subcontract.

PART 2 - PRODUCTS

Not Used

PART 3 - EXECUTION

Not Used

END OF SECTION

SOUTH TRAVIS AREA ENGINEER & MAINTENANCE FACILITY

AUSTIN DISTRICT

PROJECT NO: CBC4704-00-238

SPECIFICATIONS INDEX

DIVISION 1 - GENERAL REQUIREMENTS

01002 - Definitions and Standards
01004 - Specification Outline
01010 - Summary of Work - Buildings
01200 - Project Meetings
01300 - Administrative Requirements
01310 - Construction Schedules
01330 – Submittal Procedures
01340 - Shop Drawings, Production Data and Samples
01400 - Quality Control Procedures
01410 - Testing Laboratory Services
01500 - Construction and Temporary Controls
01630 - Substitutions and Product Options
01700 - Execution Requirements
01720 - Project Record Documents

DIVISION 2 - SITE WORK

02100 - Site Clearing
02200 - Earthwork
02210 - Geotechnical Data
02224 - Trenching
02361 - Termite Control
02741 - Hot Mix Asphalt Paving / Striping
02751 - Cement Concrete
02764 - Pavement Joint Sealants
02780 - Detectable Warning
02811 - Landscape Irrigation
02831 - Chain Link Fences and Gates
02832 - Ornamental Steel Fence and Gate
02923 - Landscape Grading
02924 - Seeding and Soil Supplements
02925 - Sodding
02930 - Exterior Plants

DIVISION 3 - CONCRETE

03300 - Cast-In-Place Concrete

DIVISION 4 - MASONRY

04090 – Masonry Accessories
04100 - Mortar
04210 - Stone Masonry

04600 – Cast Stone

DIVISION 5 – METALS

05312 - Steel Roof Deck
05500 – Metal Fabrications

DIVISION 6 - WOOD AND PLASTIC

06100 – Carpentry Work
06220 - Millwork

DIVISION 7 - THERMAL AND MOISTURE PROTECTION

07160 - Bituminous Damp Proofing
07193 - Plastic Vapor Barrier
07200 - Roof Insulation Board
07213 - Fibrous Batt Insulation
07710 - Roof Curb
07900 - Joint Sealers

DIVISION 8 - DOORS AND WINDOWS

08110 - Steel Doors and Frames
08210 - Wood Doors
08330 - Rolling Service Doors
08410 - Aluminum Entrances and Storefronts
08520 - Aluminum Windows
08710 - Finish Hardware
08800 - Glazing

DIVISION 9 - FINISHES

09110 – Metal Stud Framing System
09220 - Portland Cement Plaster
09260 - Gypsum Board System
09300 - Ceramic Tile
09510 – Suspended Acoustical Ceilings
09650 - Resilient Flooring
09900 - Painting
09910 - Painting Fueling System
09970 - Concrete Floor Sealer

DIVISION 10 - SPECIALTIES

10105 - Visual Display Boards
10165 - Toilet Compartments
10350 - Flagpoles
10425 - Signage
10500 - Metal Lockers
10522 - Fire Extinguishers & Cabinets
10800 - Toilet Accessories

DIVISION 11 - EQUIPMENT

11140 - Fuel Dispensing System

DIVISION 12 - FURNISHINGS

12512 - Blinds and Shades

DIVISION 13 - SPECIAL CONSTRUCTION

13120 - Pre-Engineered Buildings

DIVISION 14 - CONVEYING SYSTEMS

Not Used

DIVISION 15 – MECHANICAL

15050 – Basic Mechanical Requirements
15060 – Supports and Anchors
15090 – Piping Insulation
15097 - Ductwork Insulation
15210 – Reciprocating Air Compressors
15400 – Plumbing, Piping, and Associated Materials
15540 – Fuel Fired Heaters
15761 – Ductless Air Conditioning Systems
15767 – Heat Pump Air Conditioning Systems
15810 - Ductwork
15820 – Ductwork Accessories
15830 – Fans
15850 – Air Outlets and Inlets
15950 – Testing, Adjusting, and Balancing

DIVISION 16 – ELECTRICAL

16010 - Basic Electrical Requirements
16060 – Grounding and Bonding
16070 - Electrical Hangers and Supports
16075 – Electrical Identification
16123 – Building Wire and Cable
16130 – Raceway and Boxes
16140 – Wiring Devices
16150 – Wiring Connections
16210 – Electrical Utility Service
16235 – Engine Generators
16411 - Enclosed Switches
16442 – Panelboards
16491 – Fuses
16510 – Interior Luminaries
16530 – Emergency Lighting
16710 – Telecommunications Cabling
16722 - Gas Monitoring System

LIST OF DRAWINGS

TITLE SHEET

ARCHITECTURAL:

G1.1	ABBREVIATIONS AND SYMBOLS
A1.0	OVERALL SITE PLAN
A1.1	SITE PLAN
A1.2	SITE DETAILS
A1.3	SITE DETAILS
A2.1	FLOOR PLAN -Bldg. 1
A2.2	FLOOR PLAN - Bldg. 2
A2.3	FLOOR PLAN - Bldg. 3
A2.4	FLOOR PLAN - Bldg. 4
A3.1	ROOF PLAN - Bldg. 1
A3.2	ROOF PLAN - Bldg. 2
A3.3	ROOF PLAN - Bldg. 3
A3.4	ROOF PLAN - Bldg. 4
A4.1	REFLECTED CEILING PLAN - Bldg. 1
A4.2	REFLECTED CEILING PLAN - Bldg. 2
A4.3	REFLECTED CEILING PLAN - Bldg. 3
A4.4	REFLECTED CEILING PLAN - Bldg. 4
A5.1	EXTERIOR ELEVATIONS – Bldg. 1
A5.2	EXTERIOR ELEVATIONS – Bldg. 1
A5.3	EXTERIOR ELEVATIONS – Bldg. 2
A5.4	EXTERIOR ELEVATIONS - Bldg. 3
A5.5	EXTERIOR ELELATIONS - Bldg. 4
A6.1	INTERIOR ELEVATIONS
A6.2	INTERIOR ELEVATIONS
A6.3	INTERIOR ELEVATIONS
A6.4	INTERIOR ELEVATIONS
A6.5	INTERIOR ELEVATIONS
A7.1	BUILDING SECTIONS
A7.2	BUILDING SECTIONS
A7.3	BUILDING SECTIONS
A8.1	WALL SECTIONS
A8.2	WALL SECTIONS / DETAILS
A8.3	WALL SECTIONS
A8.4	WALL SECTIONS
A8.5	WALL SECTIONS
A8.6	PARTITION TYPES
A9.1	DOOR AND WINDOW SCHEDULE
A9.2	DOOR DETAILS
A9.3	DOOR AND WINDOW DETAILS
A9.4	DETAILS
A11.1	TEXAS ACCESSIBILITY STANDARDS

CIVIL:

C1.0	DEMOLITION / EROSION SEDIMENT

C1.1	GENERAL NOTES
C1.2	DIMENSIONAL PLAN
C2.0	UTILITY PLAN
C3.0	GRADING PLAN
C4.0	UTILITY DETAILS
C5.0	SITE / PAVING / DRAINAGE DETAILS
C6.0	TEMPORARY EROSION CONTROL (1)
C7.0	TEMPORARY EROSION CONTROL (2)

STRUCTURAL:

S1.1	STRUCTURAL NOTES
S2.1	FOUNDATION PLAN – Bldg. 1
S2.2	FOUNDATION PLAN- Bldg. 1
S2.3	FOUNDATION PLAN - Bldg. 2
S2.4	FOUNDATION PLAN - Bldg. 3
S3.1	FOUNDATION DETAILS
S3.2	FOUNDATION DETAILS
S3.3	FOUNDATION DETAILS
S4.1	FRAMING PLAN-Bldg. 1
S4.2	FRAMING PLAN - Bldg. 1
S4.3	FRAMING PLAN - Bldg. 2
S4.4	FRAMING PLAN - Bldg. 3
S4.5	FRAMING SECTIONS

MECHANICAL:

M2.1	MECHANICAL PLAN - Bldg. 1
M2.2	MECHANICAL PLAN – Bldg. 1
M2.3	MECHANICAL PLAN – Bldg. 2
M2.4	MECHANICAL PLAN - Bldg. 3
M4.1	MECHANICAL SCHEDULES
M4.2	MECHANICAL SCHEDULES
M5.1	MECHANICAL DETAILS

PLUMBING:

P2.1	PLUMBING PLAN - Bldg. 1
P2.2	PLUMBING PLAN – Bldg. 1
P2.3	PLUMBING PLAN – Bldg. 2
P3.1	PLUMBING RISER DIAGRAMS
P3.2	PLUMBING RISER DIAGRAMS
P4.1	PLUMBING SCHEDULES
P5.1	PLUMBING DETAILS

ELECTRICAL:

PE1.1	ELECTRICAL AND GAS SITE PLAN
E2.1	LIGHTING PLAN - Bldg. 1
E2.2	LIGHTING PLAN – Bldg. 1
E2.3	LIGHTING PLAN – Bldg. 2
E2.4	LIGHTING PLAN - Bldg. 3

E2.5	POWER PLAN – Bldg. 1
E2.6	POWER PLAN – Bldg. 1
E2.7	POWER PLAN - Bldg. 2
E2.8	POWER PLAN - Bldg. 3
E2.9	GAS DETECTION PLAN - Bldg. 1
E2.91	POWER AND SPECIAL SYSTEMS PLAN - FUEL STATION
E3.1	ELECTRICAL RISER, LEGEND & LIGHTING SCHEDULE
E4.1	ELECTRICAL PANEL BOARD SCHEDULES
E4.2	ELECTRICAL PANEL BOARD SCHEDULES
E5.1	ELECTRICAL DETAILS
EDV	VOICE & DATA DETAILS
FS.2.1	FUEL STATION SCHEDULE & PLAN

SECTION 01002
DEFINITIONS AND STANDARDS

PART 1 - GENERAL

1.01 RELATED DOCUMENTS

A. Drawings and general provisions of Contract, including General and Supplementary Conditions and other Division 1 Specification Sections, apply to this Section.

1.02 SUMMARY

This section specifies administrative requirements for compliance with governing regulations, codes and standards.

A. Requirements include obtaining permits, licenses, inspections, releases and similar documentation, as well as payments, statements and similar requirements associated with regulations, codes and standards.

1.03 DEFINITIONS

A. General: Definitions contained in this Article are not necessarily complete, but are general to the extent that they are not defined more explicitly elsewhere in the Contract documents.

B. Indicated: Refers to graphic representations, notes or schedules on the Drawings, or other Paragraphs or Schedules in Specifications, and similar requirements in Contract Documents. Where terms such as "shown," "noted," "scheduled," and "specified" are used, it is to help locate the reference; not limitation on location is intended except as specifically noted.

C. Directed: Terms such as "directed," "requested," "authorized," "selected," "approved," "required," and "permitted" mean "directed by the Architect/Engineer," "requested by the Architect/Engineer," and similar phrases. However, no implied meaning shall be interpreted to extend the Architect/Engineer's responsibility into the Contractor's area of construction supervision.

D. Approve: The term "approved" where used in conjunction with the Architect/Engineer's action on the Contractor's submittals, applications, and requests, is limited to the responsibilities and duties of the Architect/Engineer stated in General and Supplementary Conditions. Such approval shall not release the Contractor from responsibility to fulfill Contract Document requirements, unless otherwise provided in the Contract Documents.

E. Regulation: The term "Regulations" includes laws, statutes, ordinances and lawful orders issued by authorities having jurisdiction, as well as rules, conventions and agreements within the construction industry that control performance of the Work, whether they are lawfully imposed by authorities having jurisdiction or not.

F. Furnish: The term "furnish" is used to mean "supply and deliver to the Project site, ready for unloading, unpacking, assembly, installation, and similar operations."

G. Install: The term "install" is used to describe operations at project site including the actual "unloading, unpacking, assembly, erection, placing, anchoring, applying, working to dimension, finishing, curing, protecting, cleaning and similar operations.

H. Provide: The term "provide" means "to furnish and install, complete and ready for use".

I. Installer: An "Installer" is an entity engaged by the Contractor, either as an employee, subcontractor or sub-subcontractor for performance of a particular construction activity, including installation, erection, application and similar operations. Installers are required to be experienced in the construction they are engaged to perform.
   1. The term "experienced," when used with the term "Installer" means having a minimum of 5 previous Projects similar in size and scope to this Project and familiar with the precautions required, and has complied with requirements of the authority having jurisdiction.

J. Project Site_is the space available to the Contractor for performance of the Work, either exclusively or in conjunction with others performing other construction as part of the Project. The extent of the Project Site is shown on the Drawings, and may or may not be identical with the description of the land upon which the Project is to be built.

K. Testing Laboratories: A "testing laboratory" is an independent entity engaged to perform specific inspections or tests, either at the Project Site or elsewhere, and to report on, and, if required, to interpret results of those inspections or tests.

1.04 SPECIFICATION FORMAT AND CONTENT EXPLANATION

This Article is provided to help the user of these specifications understand the format, language, implied requirements, and similar conventions. None of the explanations shall be interpreted to modify the substance of Contract requirements.

A. Specification Format: These Specifications are organized into Divisions, Sections or Trade Headings based on the Construction Specifications Institute's 16 Division format and the MASTERFORMAT numbering system. This organization conforms generally to recognize construction industry practice.

B. Specification Content: This Specification has been produced employing conventions in the use of language and the intended meaning of certain terms, words, and phrases when used in particular situations or circumstances. These conventions are explained as follows:
   1. Language used in the Specifications and other Contract Documents is the abbreviated type. Implied words and meanings will be appropriately interpreted. Singular words will be interpreted as plural and plural words interpreted as singular where applicable and where the full context of the Contract Documents so indicates.
   2. Imperative Language is used generally in the Specifications. Requirements expressed imperatively are to be performed by the Contractor. At certain locations in the text, for clarity, subjective language is used to describe responsibilities that must be fulfilled indirectly by the Contractor or by others when so noted.

C. Assignment of Specialists: The Specifications requires that certain specific Construction activities shall be performed by specialists who are recognized experts in the operations to be performed. The specialists must be engaged for those activities, and the assignments are requirements over which the Contractor has no choice or option. Nevertheless, the ultimate responsibility for fulfilling Contract requirements remains with the Contractor.

1. This requirement shall not be interpreted to conflict with enforcement of building codes and similar regulations governing the Work. It is also not intended to interfere with local trade union jurisdictional settlements and similar conventions.
2. Trades: Use of titles such as "carpentry" is not intended to imply that certain construction activities must be performed by accredited or unionized individuals of a corresponding generic name, such as "carpenter". It also does not imply that requirements specified apply exclusively to trades persons of the corresponding generic name.

1.05 DRAWING SYMBOLS

A. Graphic Symbols used on the Drawings are those recognized in the construction industry for purposes indicated. Where not otherwise noted, symbols are defined by "Architectural Graphic Standards," published by John Wiley & Sons, Inc., seventh edition.

B. Mechanical/Electrical Drawings: Graphic symbols used on mechanical and electrical Drawings are generally aligned with symbols recommended by ASHRAE. Where appropriate, they are supplemented by more specific symbols recommended by technical associations including, ASME, ASPE, IEEE and similar organizations. Refer instances of uncertainty to the Architect/Engineer for clarification before proceeding.

1.06 INDUSTRY STANDARDS

A. Applicability of Standards: Except where Contract Documents include more stringent requirements, applicable construction industry standards have the same force and effect as if bound or copied directly into Contract Documents. Such standards are made a part of the Contract Documents by reference. Individual Sections indicate which codes and standards the Contractor must keep available at the Project Site for reference.
   1. Referenced standards take precedence over standards that are not referenced but recognized in the construction industry as applicable.
   2. Non-referenced standards are not directly applicable to the Work, except as a general requirement of whether the Work complies with construction industry standards.
   3. Non-referenced standards: Except as otherwise limited by the Contract Documents, standards not referenced by recognized in the industry as applicable will be enforced for performance of the Work. The Architect/Engineer will decide whether a code or standard is applicable, or which of several are applicable.

B. Publication Dates: Where compliance with an industry standard is required, comply with standard in effect as of date of Contract Documents.
   1. Updated Standards: At the request of the Architect/Engineer, Contractor or authority having jurisdiction, submit a Change Order proposal where an applicable code or standard has been revised and reissued after the date of the Contract Documents and before performance of Work affected. The Architect/Engineer will decide whether to issue a Change Order to proceed with the updated standard.

C. Conflicting Requirements: Where compliance with two or more standards is specified, and they establish different or conflicting requirements for minimum quantities or quality levels, the most stringent requirement will be enforced, unless the Contract Documents indicate otherwise. Refer requirements that are different, but apparently equal, and uncertainties as to which quality level is more stringent to the Architect/Engineer for a decision before proceeding.
   1. Minimum Quantities or Quality Levels: In every instance the quantity or quality level shown or specified shall be the minimum to be provided or performed. The actual

installation may comply exactly, within specified tolerances, with the minimum quantity or quality specified, or it may exceed that minimum within reasonable limits. In complying with these requirements, indicated numeric values are minimum or maximum values, as noted, or appropriate for the context of the requirements. Refer instances of uncertainty to the Architect/Engineer for decision **before** proceeding.

D. Copies of standards: Each entity engaged in construction on the Project is required to be familiar with industry standards applicable to that entities' Construction activity. Copies of applicable standards are not bound with the Contract Documents.
   1 Where copies of standards are needed for performance of a required construction activity, the Contractor shall obtain copies directly from the publication source.
   2. Although copies of standards needed for enforcement of requirements may be part of required submittals, the Architect/Engineer reserves the right to require the Contractor to submit additional copies as necessary for enforcement of requirements.

E. Abbreviations and Names: Trade association names and titles of general standards are frequently abbreviated. Where acronyms or abbreviations are used in the Specifications or other Contract Documents, they mean the recognized name of the trade association, standards generating organization, authority having jurisdiction or other entity applicable to the context of the text provision. Refer to the "Encyclopedia of Associations," published by Gale Research Co., available in most libraries.

F. Abbreviations and Names: Trade association names and titles of general standards are frequently abbreviated. The following acronyms as referenced in Contract Documents are defined to mean the associated names. Names and addresses are subject to change, and are believed to be, but are not assured to be, accurate as of date of Contract Documents:

1.	AASHTO	American Association of State Highway and Transportation Officials 444 No. Capitol St., Suite 225, Washington, DC 20001	202-624-5800
2.	ACI	American Concrete Institute, P. O. Box 19150 Detroit, MI 48219	313-532-2600
3.	ACIL	American Council of Independent Laboratories 1725 K Street, NW Washington, DC 20006	202-887-5872
4.	ACPA	American Concrete Pipe Association 8320 Old Courthouse Road Vienna, VA 22180	703-821-1990
5.	AGA	American Gas Association 1515 Wilson Blvd. Arlington, VA 22209	703-841-8400
6.	AI	Asphalt Institute Asphalt Institute Building College Park, MD 20740	301-277-4258
7.	AIA	American Institute of Architects 1735 New York Ave., NW Washington, DC 20006	202-626-7300
8.	AIHA	American Industrial Hygiene Association 475 Wolf Ledges Parkway Akron, OH 44311	216-762-7294
9.	AISC	American Institute of Steel Construction	

		400 No. Michigan Ave., 8th Floor Chicago, IL 60611	312-670-2400
10.	AISI	American Iron and Steel Institute 1000 Sixteenth St., N.W. Washington, DC 20036	202-452-7100
11.	ALI	Associated Laboratories 641 So. Vermont Street Palatine, IL 60067	312-358-7400
12.	ANSI	American National Standards Institute 1430 Broadway New York, NY 10018	212-354-3300
13.	API	American Petroleum Institute 1220 L Street, N.W. Washington, DC 20005	202-682-8000
14.	ASC	Adhesive and Sealant Council 1500 Wilson Blvd., Suite 515 Arlington, VA 22209	703-841-1112
15.	ASME	American Society of Mechanical Engineers 345 East 47th St. New York, New York 10017	212-705-7722
16.	ASPE	American Society of Plumbing Engineers 3617 Thousand Oaks Blvd., Suite 210 Westlake, CA 91362	805-495-7120
17.	ASSE	American Society of Sanitary Engineering P. O. Box 40362 Bay Village, OH 44140	216-835-3040
18.	ASTM	ASTM 1916 Race St. Philadelphia, PA 19103	215-599-5400
19.	AWS	American Welding Society P. O. Box 351040 550 Le Jeune Road, NW Miami, FL 33135	305-443-9353
20.	AWWA	American Water Works Association 6666 W. Quincy Ave. Denver, CO 80235	303-794-7711
21.	CRSI	Concrete Reinforcing Steel Institute 933 Plum Grove Road Schaumburg, IL 60195	312-490-1700
22.	IEEE	Institute of Electrical and Electronic Engineers 345 E. 47th St. New York, NY 10017	
23.	ISA	Instrument Society of America P. O. Box 12277 67 Alexander Drive Research Triangle Park, NC 27709	919-549-8411
24.	LPI	Lightning Protection Institute P. O. Box 458 Harvard, IL 60033	815-943-7211
25.	MCAA	Mechanical Contractor's Association of America	

		5410 Grosvenor Lane, Suite 120 Bethesda, MD 20814	301-897-0770
26.	MSS	Manufacturers Standardization Society of the Valve and Fittings Industry 127 Park St., NE Vienna, VA 22180	703-281-6613
27.	NAPA	National Asphalt Pavement Association Calvert Building, Suite 620 6811 Kenilworthy Ave. Riverdale, MD 20737	301-779-4880
28.	NEC	National Electric Code (by NFPA)	
29.	NECA	National Electrical Contractors Association 7315 Wisconsin Ave. Bethesda, MD 20814	301-657-3110
30.	NEMA	National Electrical Manufacturers Association 2101 L Street, NW, Suite 300 Washington, DC 20037	202-457-8400
31.	NFPA	National Fire Protection Association Batterymarch Park Quincy, MA 02269	617-770-3000
32.	NPCA	National Paint and Coatings Association 1500 Rhode Island Ave., NW Washington, DC 20005	202-462-6272
33.	PDI	Plumbing and Draining Institute (c/o Austin O. Roche, Jr.) 5342 Boulevard Pl. Indianapolis, IN 46208	317-251-5298
34.	PEI	Petroleum Equipment Institute 6514 East 69th St. Tulsa, OK 74133-1719	918-494-9696
35.	SSPC	Steel Structures Painting Council 4400 Fifth Avenue Pittsburgh, PA 15213	412-578-3327
36.	UL	Underwriters Laboratories 333 Pfingsten Rd. Northbrook, IL 60062	312-272-8800
37.	WRI	Wire Reinforcement Institute 8361 A Greensboro Drive McLean, VA 22102	703-790-9790
38.	WSC	Water Systems Council 600 S. Federal St., Suite 400 Chicago, IL 60605	312-922-6222
39.	WWPA	Woven Wire Products Association 2515 No. Nordica Ave. Chicago, IL 60635	312-637-1359

G. Federal Government Agencies: Names and titles of federal government standard or Specification producing agencies are frequently abbreviated. The following acronyms or abbreviations referenced in the Contract Documents indicate names of standard or Specification

producing agencies of the federal government. Names and addresses are subject to change, but are believed to be, but are not assured to be, accurate and up-to-date as of the date of the Contract Documents.

1.	CE	Corps of Engineers (US Dept. of the Army) Chief of Engineers - Referral Washington, DC 20314	202-693-6456
2.	CFR	Code of Federal Regulations Available from the Government Printing Office North Capitol Street Between G and H Streets, NW Washington, DC 20402 (Material is usually first published in the Federal Register)	202-783-3238
3.	CPSC	Consumer Product Safety Commission 1111 Eighteenth St., NW Washington, DC 20207	202-634-7700
4.	CS	Commercial Standard US Dept. of Commerce Government Printing Office Washington, DC 20402	202-377-2000
5.	DOC	Department of Commerce 14th St and Constitution Ave., NW Washington, DC 20230	202-377-2000
6.	DOT	Department of Transportation 400 Seventh St. SW Washington, DC 20590	202-426-4000
7.	EPA	Environmental Protection Agency 401 M St., SW Washington, DC 20460	202-829-3535
8.	FS	Federal Specification (General Services Administration) Specifications Unit (WFSIS) 7th and D St., SW Washington, DC 20406	202-472-2205 202-472-2140
9.	GSA	General Services Administration F Street and 18th St., NW Washington, DC 20405	202-655-400
10.	MIL	Military Standardization Documents (US Department of Defense) Naval Publications and Forms Center 5801 Tabor Ave. Philadelphia, PA 19120	
11.	NBS	National Bureau of Standards (US Dept. of Commerce) Gaithersburg, MD 20234	301-921-1000
12.	OSHA	Occupational Safety and Health Administration (US Dept. of Labor) Government Printing Office Washington, DC 20402	202-783-3238
13.	PS	Product Standard of NBS	

(US Dept. of Commerce)
Government Printing Office
Washington, DC 20402 202-783-3238

1.07 GOVERNING REGULATIONS/AUTHORITIES:

The Architect/Engineer has contacted authorities having jurisdiction where necessary to obtain information necessary for the preparation of Contract Documents; that information may or may not be of significance to the Contractor. Contact authorities having jurisdiction directly for information and decisions having a bearing on the Work.

A. Copies of Correspondence: During preparation of the Contract Documents, the Architect/Engineer has maintained a file containing correspondence with authorities having jurisdiction. This file is available at the Architect/Engineer's office for reference. If requested, the Architect/Engineer will provide copies of correspondence at cost of reproduction.

B. Copies of Regulations: Obtain copies of the following regulations and retain at the Project Site, available for reference by parties who have a reasonable need for such reference.

C. Trade Union Jurisdictions: The Contractor shall maintain, and require subcontractors to maintain complete current information on jurisdictional matters, regulations and pending actions, as applicable to construction activities. The manner in which Contract Documents have been organized and subdivided is not intended to indicate of trade union or jurisdictional agreements.
   1. Discuss new developments at Project meetings at the earliest feasible dates. Record relevant information and actions agreed upon.
   2. Assign and subcontract construction activities, and employ tradesmen and laborers, in a manner that will not unduly risk jurisdictional disputes that could result in conflicts, delays, claims and losses.

1.08 SUBMITTALS

A. Permits, Licenses, and Certificates: For the Owner's records, submit copies of permits, licenses, certifications, inspection reports, releases, jurisdictional settlements, notices, receipts for fee payments, judgments, and similar documents, correspondence and records established in conjunction with compliance with standards and regulations bearing upon performance of the Work.

PART 2 - PRODUCTS

Not Applicable

PART 3 - EXECUTION

Not Applicable

END OF SECTION

SECTION 01004
SPECIFICATION OUTLINE

PART 1 - GENERAL

1.01 SUMMARY

A. The purpose of this section is to describe the organization and format to which the Specification has been prepared. This section is intended as an aid to the comprehension of the specification.

1.02 SPECIFICATION FORMAT

A. The Specification has been prepared in accordance with Construction Specifications Institute (CSI) Format

B. The CSI format is subdivided into 16 major divisions. Divisions form the framework of this Specification and contain the technical requirements for the category of work within each division. Divisions that are not applicable to this specification are not used.

C. Sections within each division describe the specific requirements for different units of work based on trade or type of work. Sections within divisions are arranged in numerical order; however, section numbers may be assigned differently in separate divisions. Page numbering is subordinate to section numbering.

D. Sections are sub-divided into three distinct groupings of related information as follows:
   1. Part 1 - GENERAL: Defines the administrative and procedural requirements unique to the section.
   2. Part 2 - PRODUCTS: Details the quality and features of items required for the project.
   3. Part 3 - EXECUTION: Details the incorporation of the products into the project.

   Most sections contain all three sub-divisions; however, they are included only where needed. Paragraph designations are subordinate to sub-divisions.

E. Many sections do not stand alone and are related to other portions of the Subcontract documents. Some sections are specific extensions of, or are governed by the general requirements of Division 1. Requirements of the Subcontract Documents shall apply as a whole, regardless of any overlapping of various portions of the specification.

F. This specification has been written in the imperative mood and, in some cases, in a streamlined form. The imperative language is directed to the Contractor, unless specifically noted otherwise.

1.03 CLARIFICATIONS

A. Most sections begin with a paragraph in Part 1 entitled "Summary" or "Scope of Work". These paragraphs provide a brief description of the work specified in that Section. These descriptions are not intended to be all-inclusive, but provide a brief clarification of the particular subject matter in the specification.

B. Some technical sections contain a paragraph entitled "Related Sections" or "Related Work Specified Elsewhere". This paragraph lists some of the related work specified in other sections

SECTION 01010
SUMMARY OF WORK

PART 1 - GENERAL

1.01 SUMMARY

A. Project identification:

TEXAS DEPARTMENT OF TRANSPORTATION
AUSTIN DISTRICT, TRAVIS COUNTY
South Travis Area Engineer & Maintenance Facility
26.238 acres out of Santiago Del Valle Grant, Abstract No. 24
Travis County, Austin, Texas

B. Project summary:
1. This project consists of Four buildings and all related site work. Major components of site work consist of site roadways, parking lots, asphalt paving, concrete driveways, concrete curb and gutter, security fencing and gates, concrete walks, drainage structures and connection of building to utility systems.

   Building 1: Office Building. Slab on grade foundation, with a pre-engineered metal building structure with roof purlins, roof insulation board and standing seam metal roof, metal studs and stone veneer exterior wall, forced air DX heating and cooling system.

   Building 2: Maintenance. Connected to Building 1. Slab on grade foundation. Pre-engineered metal building structure with roof purlins, standing seam metal roof and metal wall panels, infrared heating in Shop and Storage areas, compressed air distribution system, and ventilation system.

   Building 3. Laboratory/Storage. Connected to Building 1 with breezeway. Slab on grade foundation. Pre-engineered metal building structure with roof purlins, standing seam metal roof and metal wall panels, forced air DX heating and cooling in Lab and related spaces.

   Building 4. Vehicle Storage. Slab on grade foundation. Pre-engineered metal building structure with roof purlins, standing seam metal roof and metal wall panels.

C. Particular project requirements:
1. Concurrent work by Owner or others: Owner reserves the right to conduct minor work with his own forces or separate contractors during the construction. Work will be coordinated with the contractor.
2. Contractor will have unrestricted access to site.

D. Permits and Fees: Apply for, obtain, and pay for permits, if applicable, fees, and utility company back charges required to perform the work. Submit copies to Owner.

E. Codes: Comply with applicable codes and regulations of authorities having jurisdiction. Submit copies of inspection reports, notices and similar communications to Owner. Primary code is the International Building Code, 2003.

F. Dimensions: Verify dimensions indicated on drawings with field dimensions before fabrication or ordering of materials. Do not scale drawings.

G. Existing Conditions: Notify Owner of existing conditions differing from those indicated on the drawings. Do not remove or alter structural components without prior written approval.

H. Coordination:
   1. Coordinate the work of all trades.
   2. Prepare coordination drawings for areas above ceilings where close tolerances are required between building elements and mechanical and electrical work.
   3. Verify location of utilities and existing conditions prior to beginning work.

I. Installation Requirements, General:
   1. Inspect substrates and report unsatisfactory conditions in writing.
   2. Do not proceed until unsatisfactory conditions have been corrected.
   3. Take field measurements prior to fabrication where practical. Form to required shapes and sizes with true edges, lines and angles. Provide inserts and templates as needed for work of other trades.
   4. Install materials in accordance with manufacturer's instructions and approved submittals.
   5. Install materials in proper relation with adjacent construction and with proper appearance.
   6. Restore units damaged during installation. Replace units which cannot be restored at no additional expense to the Owner.
   7. Refer to additional installation requirements and tolerances specified under individual specification sections.

J. Definitions:
   1. Provide: Furnish and install, complete with all necessary accessories, ready for intended use. Pay for all related costs.
   2. Approved: Acceptance of item submitted for approval. Not a limitation or release for compliance with the Contract Documents or regulatory requirements. Refer to limitations of 'Approved' in General and Supplementary Conditions.

K. Intent: Drawings and specifications are intended to provide the basis for proper completion of the work suitable for the intended use. Anything not expressly set forth but which is reasonable implied or necessary for proper performance of the project shall be included.

L. Writing style: Specifications are written in the imperative mode. Except where specifically intended otherwise, the subject of all imperative statements is the Contractor. For example, 'Provide tile' means 'Contractor shall provide tile.'

PART 2 - PRODUCTS

Not applicable to this section.

PART 3 – EXECUTION

Not applicable to this section.

END OF SECTION

of the Subcontract Documents. These listings are not intended to be all-inclusive. They are presented as a means of aiding the Subcontractor in locating other specification sections containing work that has a close relationship with the work specified in that section. The requirements of the Subcontract Documents, including all specifications, shall apply as a whole.

C. Reference standards are incorporated into the specifications by reference number, title or other designations. The provisions of these standards become a part of the specification as though included in their entirety. When there is a conflict or discrepancy between a reference standard and the specification or with another reference standard, the more stringent requirements shall apply.
D. In the event of a Discrepancy between a drawing and the specification, the specification shall govern.

E. No typographical or other error on drawings shall relieve the Sub-Contractor from his responsibility to perform the intent of this Subcontract.

PART 2 - PRODUCTS

Not Used

PART 3 - EXECUTION

Not Used

END OF SECTION

SOUTH TRAVIS AREA ENGINEER & MAINTENANCE FACILITY

AUSTIN DISTRICT

PROJECT NO: CBC4704-00-238

SPECIFICATIONS INDEX

DIVISION 1 - GENERAL REQUIREMENTS

01002 - Definitions and Standards
01004 - Specification Outline
01010 - Summary of Work - Buildings
01200 - Project Meetings
01300 - Administrative Requirements
01310 - Construction Schedules
01330 – Submittal Procedures
01340 - Shop Drawings, Production Data and Samples
01400 - Quality Control Procedures
01410 - Testing Laboratory Services
01500 - Construction and Temporary Controls
01630 - Substitutions and Product Options
01700 - Execution Requirements
01720 - Project Record Documents

DIVISION 2 - SITE WORK

02100 - Site Clearing
02200 - Earthwork
02210 - Geotechnical Data
02224 - Trenching
02361 - Termite Control
02741 - Hot Mix Asphalt Paving / Striping
02751 - Cement Concrete
02764 - Pavement Joint Sealants
02780 - Detectable Warning
02811 - Landscape Irrigation
02831 - Chain Link Fences and Gates
02832 - Ornamental Steel Fence and Gate
02923 - Landscape Grading
02924 - Seeding and Soil Supplements
02925 - Sodding
02930 - Exterior Plants

DIVISION 3 - CONCRETE

03300 - Cast-In-Place Concrete

DIVISION 4 - MASONRY

04090 – Masonry Accessories
04100 - Mortar
04210 - Stone Masonry

SOUTH TRAVIS AREA ENGINEER & MAINTENANCE FACILITY

AUSTIN DISTRICT

PROJECT NO: CBC4704-00-238

SPECIFICATIONS INDEX

DIVISION 1 - GENERAL REQUIREMENTS

01002 - Definitions and Standards
01004 - Specification Outline
01010 - Summary of Work - Buildings
01200 - Project Meetings
01300 - Administrative Requirements
01310 - Construction Schedules
01330 – Submittal Procedures
01340 - Shop Drawings, Production Data and Samples
01400 - Quality Control Procedures
01410 - Testing Laboratory Services
01500 - Construction and Temporary Controls
01630 - Substitutions and Product Options
01700 - Execution Requirements
01720 - Project Record Documents

DIVISION 2 - SITE WORK

02100 - Site Clearing
02200 - Earthwork
02210 - Geotechnical Data
02224 - Trenching
02361 - Termite Control
02741 - Hot Mix Asphalt Paving / Striping
02751 - Cement Concrete
02764 - Pavement Joint Sealants
02780 - Detectable Warning
02811 - Landscape Irrigation
02831 - Chain Link Fences and Gates
02832 - Ornamental Steel Fence and Gate
02923 - Landscape Grading
02924 - Seeding and Soil Supplements
02925 - Sodding
02930 - Exterior Plants

DIVISION 3 - CONCRETE

03300 - Cast-In-Place Concrete

DIVISION 4 - MASONRY

04090 – Masonry Accessories
04100 - Mortar
04210 - Stone Masonry

04600 – Cast Stone

DIVISION 5 – METALS

05312 - Steel Roof Deck
05500 – Metal Fabrications

DIVISION 6 - WOOD AND PLASTIC

06100 – Carpentry Work
06220 - Millwork

DIVISION 7 - THERMAL AND MOISTURE PROTECTION

07160 - Bituminous Damp Proofing
07193 - Plastic Vapor Barrier
07200 - Roof Insulation Board
07213 - Fibrous Batt Insulation
07710 - Roof Curb
07900 - Joint Sealers

DIVISION 8 - DOORS AND WINDOWS

08110 - Steel Doors and Frames
08210 - Wood Doors
08330 - Rolling Service Doors
08410 - Aluminum Entrances and Storefronts
08520 - Aluminum Windows
08710 - Finish Hardware
08800 - Glazing

DIVISION 9 - FINISHES

09110 – Metal Stud Framing System
09220 - Portland Cement Plaster
09260 - Gypsum Board System
09300 - Ceramic Tile
09510 – Suspended Acoustical Ceilings
09650 - Resilient Flooring
09900 - Painting
09910 - Painting Fueling System
09970 - Concrete Floor Sealer

DIVISION 10 - SPECIALTIES

10105 - Visual Display Boards
10165 - Toilet Compartments
10350 - Flagpoles
10425 - Signage
10500 - Metal Lockers
10522 - Fire Extinguishers & Cabinets
10800 - Toilet Accessories

DIVISION 11 - EQUIPMENT

11140 - Fuel Dispensing System

DIVISION 12 - FURNISHINGS

12512 - Blinds and Shades

DIVISION 13 - SPECIAL CONSTRUCTION

13120 - Pre-Engineered Buildings

DIVISION 14 - CONVEYING SYSTEMS

Not Used

DIVISION 15 – MECHANICAL

15050 – Basic Mechanical Requirements
15060 – Supports and Anchors
15090 – Piping Insulation
15097 - Ductwork Insulation
15210 – Reciprocating Air Compressors
15400 – Plumbing, Piping, and Associated Materials
15540 – Fuel Fired Heaters
15761 – Ductless Air Conditioning Systems
15767 – Heat Pump Air Conditioning Systems
15810 - Ductwork
15820 – Ductwork Accessories
15830 – Fans
15850 – Air Outlets and Inlets
15950 – Testing, Adjusting, and Balancing

DIVISION 16 – ELECTRICAL

16010 - Basic Electrical Requirements
16060 – Grounding and Bonding
16070 - Electrical Hangers and Supports
16075 – Electrical Identification
16123 – Building Wire and Cable
16130 – Raceway and Boxes
16140 – Wiring Devices
16150 – Wiring Connections
16210 – Electrical Utility Service
16235 – Engine Generators
16411 - Enclosed Switches
16442 – Panelboards
16491 – Fuses
16510 – Interior Luminaries
16530 – Emergency Lighting
16710 – Telecommunications Cabling
16722 - Gas Monitoring System

LIST OF DRAWINGS

TITLE SHEET

ARCHITECTURAL:

G1.1	ABBREVIATIONS AND SYMBOLS
A1.0	OVERALL SITE PLAN
A1.1	SITE PLAN
A1.2	SITE DETAILS
A1.3	SITE DETAILS
A2.1	FLOOR PLAN -Bldg. 1
A2.2	FLOOR PLAN - Bldg. 2
A2.3	FLOOR PLAN - Bldg. 3
A2.4	FLOOR PLAN - Bldg. 4
A3.1	ROOF PLAN - Bldg. 1
A3.2	ROOF PLAN - Bldg. 2
A3.3	ROOF PLAN - Bldg. 3
A3.4	ROOF PLAN - Bldg. 4
A4.1	REFLECTED CEILING PLAN - Bldg. 1
A4.2	REFLECTED CEILING PLAN - Bldg. 2
A4.3	REFLECTED CEILING PLAN - Bldg. 3
A4.4	REFLECTED CEILING PLAN - Bldg. 4
A5.1	EXTERIOR ELEVATIONS – Bldg. 1
A5.2	EXTERIOR ELEVATIONS – Bldg. 1
A5.3	EXTERIOR ELEVATIONS – Bldg. 2
A5.4	EXTERIOR ELEVATIONS - Bldg. 3
A5.5	EXTERIOR ELELATIONS - Bldg. 4
A6.1	INTERIOR ELEVATIONS
A6.2	INTERIOR ELEVATIONS
A6.3	INTERIOR ELEVATIONS
A6.4	INTERIOR ELEVATIONS
A6.5	INTERIOR ELEVATIONS
A7.1	BUILDING SECTIONS
A7.2	BUILDING SECTIONS
A7.3	BUILDING SECTIONS
A8.1	WALL SECTIONS
A8.2	WALL SECTIONS / DETAILS
A8.3	WALL SECTIONS
A8.4	WALL SECTIONS
A8.5	WALL SECTIONS
A8.6	PARTITION TYPES
A9.1	DOOR AND WINDOW SCHEDULE
A9.2	DOOR DETAILS
A9.3	DOOR AND WINDOW DETAILS
A9.4	DETAILS
A11.1	TEXAS ACCESSIBILITY STANDARDS

CIVIL:

C1.0	DEMOLITION / EROSION SEDIMENT

C1.1	GENERAL NOTES
C1.2	DIMENSIONAL PLAN
C2.0	UTILITY PLAN
C3.0	GRADING PLAN
C4.0	UTILITY DETAILS
C5.0	SITE / PAVING / DRAINAGE DETAILS
C6.0	TEMPORARY EROSION CONTROL (1)
C7.0	TEMPORARY EROSION CONTROL (2)

STRUCTURAL:

S1.1	STRUCTURAL NOTES
S2.1	FOUNDATION PLAN – Bldg. 1
S2.2	FOUNDATION PLAN- Bldg. 1
S2.3	FOUNDATION PLAN - Bldg. 2
S2.4	FOUNDATION PLAN - Bldg. 3
S3.1	FOUNDATION DETAILS
S3.2	FOUNDATION DETAILS
S3.3	FOUNDATION DETAILS
S4.1	FRAMING PLAN-Bldg. 1
S4.2	FRAMING PLAN - Bldg. 1
S4.3	FRAMING PLAN - Bldg. 2
S4.4	FRAMING PLAN - Bldg. 3
S4.5	FRAMING SECTIONS

MECHANICAL:

M2.1	MECHANICAL PLAN - Bldg. 1
M2.2	MECHANICAL PLAN – Bldg. 1
M2.3	MECHANICAL PLAN – Bldg. 2
M2.4	MECHANICAL PLAN - Bldg. 3
M4.1	MECHANICAL SCHEDULES
M4.2	MECHANICAL SCHEDULES
M5.1	MECHANICAL DETAILS

PLUMBING:

P2.1	PLUMBING PLAN - Bldg. 1
P2.2	PLUMBING PLAN – Bldg. 1
P2.3	PLUMBING PLAN – Bldg. 2
P3.1	PLUMBING RISER DIAGRAMS
P3.2	PLUMBING RISER DIAGRAMS
P4.1	PLUMBING SCHEDULES
P5.1	PLUMBING DETAILS

ELECTRICAL:

PE1.1	ELECTRICAL AND GAS SITE PLAN
E2.1	LIGHTING PLAN - Bldg. 1
E2.2	LIGHTING PLAN – Bldg. 1
E2.3	LIGHTING PLAN – Bldg. 2
E2.4	LIGHTING PLAN - Bldg. 3

E2.5	POWER PLAN – Bldg. 1
E2.6	POWER PLAN – Bldg. 1
E2.7	POWER PLAN - Bldg. 2
E2.8	POWER PLAN - Bldg. 3
E2.9	GAS DETECTION PLAN - Bldg. 1
E2.91	POWER AND SPECIAL SYSTEMS PLAN - FUEL STATION
E3.1	ELECTRICAL RISER, LEGEND & LIGHTING SCHEDULE
E4.1	ELECTRICAL PANEL BOARD SCHEDULES
E4.2	ELECTRICAL PANEL BOARD SCHEDULES
E5.1	ELECTRICAL DETAILS
EDV	VOICE & DATA DETAILS
FS.2.1	FUEL STATION SCHEDULE & PLAN

SECTION 01002
DEFINITIONS AND STANDARDS

PART 1 - GENERAL

1.01 RELATED DOCUMENTS

A. Drawings and general provisions of Contract, including General and Supplementary Conditions and other Division 1 Specification Sections, apply to this Section.

1.02 SUMMARY

This section specifies administrative requirements for compliance with governing regulations, codes and standards.

A. Requirements include obtaining permits, licenses, inspections, releases and similar documentation, as well as payments, statements and similar requirements associated with regulations, codes and standards.

1.03 DEFINITIONS

A. General: Definitions contained in this Article are not necessarily complete, but are general to the extent that they are not defined more explicitly elsewhere in the Contract documents.

B. Indicated: Refers to graphic representations, notes or schedules on the Drawings, or other Paragraphs or Schedules in Specifications, and similar requirements in Contract Documents. Where terms such as "shown," "noted," "scheduled," and "specified" are used, it is to help locate the reference; not limitation on location is intended except as specifically noted.

C. Directed: Terms such as "directed," "requested," "authorized," "selected," "approved," "required," and "permitted" mean "directed by the Architect/Engineer," "requested by the Architect/Engineer," and similar phrases. However, no implied meaning shall be interpreted to extend the Architect/Engineer's responsibility into the Contractor's area of construction supervision.

D. Approve: The term "approved" where used in conjunction with the Architect/Engineer's action on the Contractor's submittals, applications, and requests, is limited to the responsibilities and duties of the Architect/Engineer stated in General and Supplementary Conditions. Such approval shall not release the Contractor from responsibility to fulfill Contract Document requirements, unless otherwise provided in the Contract Documents.

E. Regulation: The term "Regulations" includes laws, statutes, ordinances and lawful orders issued by authorities having jurisdiction, as well as rules, conventions and agreements within the construction industry that control performance of the Work, whether they are lawfully imposed by authorities having jurisdiction or not.

F. Furnish: The term "furnish" is used to mean "supply and deliver to the Project site, ready for unloading, unpacking, assembly, installation, and similar operations."

G. Install: The term "install" is used to describe operations at project site including the actual "unloading, unpacking, assembly, erection, placing, anchoring, applying, working to dimension, finishing, curing, protecting, cleaning and similar operations.

H. Provide: The term "provide" means "to furnish and install, complete and ready for use".

I. Installer: An "Installer" is an entity engaged by the Contractor, either as an employee, subcontractor or sub-subcontractor for performance of a particular construction activity, including installation, erection, application and similar operations. Installers are required to be experienced in the construction they are engaged to perform.
   1. The term "experienced," when used with the term "Installer" means having a minimum of 5 previous Projects similar in size and scope to this Project and familiar with the precautions required, and has complied with requirements of the authority having jurisdiction.

J. Project Site_is the space available to the Contractor for performance of the Work, either exclusively or in conjunction with others performing other construction as part of the Project. The extent of the Project Site is shown on the Drawings, and may or may not be identical with the description of the land upon which the Project is to be built.

K. Testing Laboratories: A "testing laboratory" is an independent entity engaged to perform specific inspections or tests, either at the Project Site or elsewhere, and to report on, and, if required, to interpret results of those inspections or tests.

1.04 SPECIFICATION FORMAT AND CONTENT EXPLANATION

This Article is provided to help the user of these specifications understand the format, language, implied requirements, and similar conventions. None of the explanations shall be interpreted to modify the substance of Contract requirements.

A. Specification Format: These Specifications are organized into Divisions, Sections or Trade Headings based on the Construction Specifications Institute's 16 Division format and the MASTERFORMAT numbering system. This organization conforms generally to recognize construction industry practice.

B. Specification Content: This Specification has been produced employing conventions in the use of language and the intended meaning of certain terms, words, and phrases when used in particular situations or circumstances. These conventions are explained as follows:
   1. Language used in the Specifications and other Contract Documents is the abbreviated type. Implied words and meanings will be appropriately interpreted. Singular words will be interpreted as plural and plural words interpreted as singular where applicable and where the full context of the Contract Documents so indicates.
   2. Imperative Language is used generally in the Specifications. Requirements expressed imperatively are to be performed by the Contractor. At certain locations in the text, for clarity, subjective language is used to describe responsibilities that must be fulfilled indirectly by the Contractor or by others when so noted.

C. Assignment of Specialists: The Specifications requires that certain specific Construction activities shall be performed by specialists who are recognized experts in the operations to be performed. The specialists must be engaged for those activities, and the assignments are requirements over which the Contractor has no choice or option. Nevertheless, the ultimate responsibility for fulfilling Contract requirements remains with the Contractor.

1. This requirement shall not be interpreted to conflict with enforcement of building codes and similar regulations governing the Work. It is also not intended to interfere with local trade union jurisdictional settlements and similar conventions.
2. Trades: Use of titles such as "carpentry" is not intended to imply that certain construction activities must be performed by accredited or unionized individuals of a corresponding generic name, such as "carpenter". It also does not imply that requirements specified apply exclusively to trades persons of the corresponding generic name.

1.05 DRAWING SYMBOLS

A. Graphic Symbols used on the Drawings are those recognized in the construction industry for purposes indicated. Where not otherwise noted, symbols are defined by "Architectural Graphic Standards," published by John Wiley & Sons, Inc., seventh edition.

B. Mechanical/Electrical Drawings: Graphic symbols used on mechanical and electrical Drawings are generally aligned with symbols recommended by ASHRAE. Where appropriate, they are supplemented by more specific symbols recommended by technical associations including, ASME, ASPE, IEEE and similar organizations. Refer instances of uncertainty to the Architect/Engineer for clarification before proceeding.

1.06 INDUSTRY STANDARDS

A. Applicability of Standards: Except where Contract Documents include more stringent requirements, applicable construction industry standards have the same force and effect as if bound or copied directly into Contract Documents. Such standards are made a part of the Contract Documents by reference. Individual Sections indicate which codes and standards the Contractor must keep available at the Project Site for reference.
   1. Referenced standards take precedence over standards that are not referenced but recognized in the construction industry as applicable.
   2. Non-referenced standards are not directly applicable to the Work, except as a general requirement of whether the Work complies with construction industry standards.
   3. Non-referenced standards: Except as otherwise limited by the Contract Documents, standards not referenced by recognized in the industry as applicable will be enforced for performance of the Work. The Architect/Engineer will decide whether a code or standard is applicable, or which of several are applicable.

B. Publication Dates: Where compliance with an industry standard is required, comply with standard in effect as of date of Contract Documents.
   1. Updated Standards: At the request of the Architect/Engineer, Contractor or authority having jurisdiction, submit a Change Order proposal where an applicable code or standard has been revised and reissued after the date of the Contract Documents and before performance of Work affected. The Architect/Engineer will decide whether to issue a Change Order to proceed with the updated standard.

C. Conflicting Requirements: Where compliance with two or more standards is specified, and they establish different or conflicting requirements for minimum quantities or quality levels, the most stringent requirement will be enforced, unless the Contract Documents indicate otherwise. Refer requirements that are different, but apparently equal, and uncertainties as to which quality level is more stringent to the Architect/Engineer for a decision before proceeding.
   1. Minimum Quantities or Quality Levels: In every instance the quantity or quality level shown or specified shall be the minimum to be provided or performed. The actual

installation may comply exactly, within specified tolerances, with the minimum quantity or quality specified, or it may exceed that minimum within reasonable limits. In complying with these requirements, indicated numeric values are minimum or maximum values, as noted, or appropriate for the context of the requirements. Refer instances of uncertainty to the Architect/Engineer for decision **before** proceeding.

D. Copies of standards: Each entity engaged in construction on the Project is required to be familiar with industry standards applicable to that entities' Construction activity. Copies of applicable standards are not bound with the Contract Documents.
   1 Where copies of standards are needed for performance of a required construction activity, the Contractor shall obtain copies directly from the publication source.
   2. Although copies of standards needed for enforcement of requirements may be part of required submittals, the Architect/Engineer reserves the right to require the Contractor to submit additional copies as necessary for enforcement of requirements.

E. Abbreviations and Names: Trade association names and titles of general standards are frequently abbreviated. Where acronyms or abbreviations are used in the Specifications or other Contract Documents, they mean the recognized name of the trade association, standards generating organization, authority having jurisdiction or other entity applicable to the context of the text provision. Refer to the "Encyclopedia of Associations," published by Gale Research Co., available in most libraries.

F. Abbreviations and Names: Trade association names and titles of general standards are frequently abbreviated. The following acronyms as referenced in Contract Documents are defined to mean the associated names. Names and addresses are subject to change, and are believed to be, but are not assured to be, accurate as of date of Contract Documents:

1.	AASHTO	American Association of State Highway and Transportation Officials 444 No. Capitol St., Suite 225, Washington, DC 20001	202-624-5800
2.	ACI	American Concrete Institute, P. O. Box 19150 Detroit, MI 48219	313-532-2600
3.	ACIL	American Council of Independent Laboratories 1725 K Street, NW Washington, DC 20006	202-887-5872
4.	ACPA	American Concrete Pipe Association 8320 Old Courthouse Road Vienna, VA 22180	703-821-1990
5.	AGA	American Gas Association 1515 Wilson Blvd. Arlington, VA 22209	703-841-8400
6.	AI	Asphalt Institute Asphalt Institute Building College Park, MD 20740	301-277-4258
7.	AIA	American Institute of Architects 1735 New York Ave., NW Washington, DC 20006	202-626-7300
8.	AIHA	American Industrial Hygiene Association 475 Wolf Ledges Parkway Akron, OH 44311	216-762-7294
9.	AISC	American Institute of Steel Construction	

		400 No. Michigan Ave., 8th Floor Chicago, IL 60611	312-670-2400
10.	AISI	American Iron and Steel Institute 1000 Sixteenth St., N.W. Washington, DC 20036	202-452-7100
11.	ALI	Associated Laboratories 641 So. Vermont Street Palatine, IL 60067	312-358-7400
12.	ANSI	American National Standards Institute 1430 Broadway New York, NY 10018	212-354-3300
13.	API	American Petroleum Institute 1220 L Street, N.W. Washington, DC 20005	202-682-8000
14.	ASC	Adhesive and Sealant Council 1500 Wilson Blvd., Suite 515 Arlington, VA 22209	703-841-1112
15.	ASME	American Society of Mechanical Engineers 345 East 47th St. New York, New York 10017	212-705-7722
16.	ASPE	American Society of Plumbing Engineers 3617 Thousand Oaks Blvd., Suite 210 Westlake, CA 91362	805-495-7120
17.	ASSE	American Society of Sanitary Engineering P. O. Box 40362 Bay Village, OH 44140	216-835-3040
18.	ASTM	ASTM 1916 Race St. Philadelphia, PA 19103	215-599-5400
19.	AWS	American Welding Society P. O. Box 351040 550 Le Jeune Road, NW Miami, FL 33135	305-443-9353
20.	AWWA	American Water Works Association 6666 W. Quincy Ave. Denver, CO 80235	303-794-7711
21.	CRSI	Concrete Reinforcing Steel Institute 933 Plum Grove Road Schaumburg, IL 60195	312-490-1700
22.	IEEE	Institute of Electrical and Electronic Engineers 345 E. 47th St. New York, NY 10017	
23.	ISA	Instrument Society of America P. O. Box 12277 67 Alexander Drive Research Triangle Park, NC 27709	919-549-8411
24.	LPI	Lightning Protection Institute P. O. Box 458 Harvard, IL 60033	815-943-7211
25.	MCAA	Mechanical Contractor's Association of America	

		5410 Grosvenor Lane, Suite 120 Bethesda, MD 20814	301-897-0770
26.	MSS	Manufacturers Standardization Society of the Valve and Fittings Industry 127 Park St., NE Vienna, VA 22180	703-281-6613
27.	NAPA	National Asphalt Pavement Association Calvert Building, Suite 620 6811 Kenilworthy Ave. Riverdale, MD 20737	301-779-4880
28.	NEC	National Electric Code (by NFPA)	
29.	NECA	National Electrical Contractors Association 7315 Wisconsin Ave. Bethesda, MD 20814	301-657-3110
30.	NEMA	National Electrical Manufacturers Association 2101 L Street, NW, Suite 300 Washington, DC 20037	202-457-8400
31.	NFPA	National Fire Protection Association Batterymarch Park Quincy, MA 02269	617-770-3000
32.	NPCA	National Paint and Coatings Association 1500 Rhode Island Ave., NW Washington, DC 20005	202-462-6272
33.	PDI	Plumbing and Draining Institute (c/o Austin O. Roche, Jr.) 5342 Boulevard Pl. Indianapolis, IN 46208	317-251-5298
34.	PEI	Petroleum Equipment Institute 6514 East 69th St. Tulsa, OK 74133-1719	918-494-9696
35.	SSPC	Steel Structures Painting Council 4400 Fifth Avenue Pittsburgh, PA 15213	412-578-3327
36.	UL	Underwriters Laboratories 333 Pfingsten Rd. Northbrook, IL 60062	312-272-8800
37.	WRI	Wire Reinforcement Institute 8361 A Greensboro Drive McLean, VA 22102	703-790-9790
38.	WSC	Water Systems Council 600 S. Federal St., Suite 400 Chicago, IL 60605	312-922-6222
39.	WWPA	Woven Wire Products Association 2515 No. Nordica Ave. Chicago, IL 60635	312-637-1359

G. Federal Government Agencies: Names and titles of federal government standard or Specification producing agencies are frequently abbreviated. The following acronyms or abbreviations referenced in the Contract Documents indicate names of standard or Specification

producing agencies of the federal government. Names and addresses are subject to change, but are believed to be, but are not assured to be, accurate and up-to-date as of the date of the Contract Documents.

1.	CE	Corps of Engineers (US Dept. of the Army) Chief of Engineers - Referral Washington, DC 20314	202-693-6456
2.	CFR	Code of Federal Regulations Available from the Government Printing Office North Capitol Street Between G and H Streets, NW Washington, DC 20402 (Material is usually first published in the Federal Register)	202-783-3238
3.	CPSC	Consumer Product Safety Commission 1111 Eighteenth St., NW Washington, DC 20207	202-634-7700
4.	CS	Commercial Standard US Dept. of Commerce Government Printing Office Washington, DC 20402	202-377-2000
5.	DOC	Department of Commerce 14th St and Constitution Ave., NW Washington, DC 20230	202-377-2000
6.	DOT	Department of Transportation 400 Seventh St. SW Washington, DC 20590	202-426-4000
7.	EPA	Environmental Protection Agency 401 M St., SW Washington, DC 20460	202-829-3535
8.	FS	Federal Specification (General Services Administration) Specifications Unit (WFSIS) 7th and D St., SW Washington, DC 20406	202-472-2205 202-472-2140
9.	GSA	General Services Administration F Street and 18th St., NW Washington, DC 20405	202-655-400
10.	MIL	Military Standardization Documents (US Department of Defense) Naval Publications and Forms Center 5801 Tabor Ave. Philadelphia, PA 19120	
11.	NBS	National Bureau of Standards (US Dept. of Commerce) Gaithersburg, MD 20234	301-921-1000
12.	OSHA	Occupational Safety and Health Administration (US Dept. of Labor) Government Printing Office Washington, DC 20402	202-783-3238
13.	PS	Product Standard of NBS	

(US Dept. of Commerce)
Government Printing Office
Washington, DC 20402 202-783-3238

1.07 GOVERNING REGULATIONS/AUTHORITIES:

The Architect/Engineer has contacted authorities having jurisdiction where necessary to obtain information necessary for the preparation of Contract Documents; that information may or may not be of significance to the Contractor. Contact authorities having jurisdiction directly for information and decisions having a bearing on the Work.

A. Copies of Correspondence: During preparation of the Contract Documents, the Architect/Engineer has maintained a file containing correspondence with authorities having jurisdiction. This file is available at the Architect/Engineer's office for reference. If requested, the Architect/Engineer will provide copies of correspondence at cost of reproduction.

B. Copies of Regulations: Obtain copies of the following regulations and retain at the Project Site, available for reference by parties who have a reasonable need for such reference.

C. Trade Union Jurisdictions: The Contractor shall maintain, and require subcontractors to maintain complete current information on jurisdictional matters, regulations and pending actions, as applicable to construction activities. The manner in which Contract Documents have been organized and subdivided is not intended to indicate of trade union or jurisdictional agreements.
   1. Discuss new developments at Project meetings at the earliest feasible dates. Record relevant information and actions agreed upon.
   2. Assign and subcontract construction activities, and employ tradesmen and laborers, in a manner that will not unduly risk jurisdictional disputes that could result in conflicts, delays, claims and losses.

1.08 SUBMITTALS

A. Permits, Licenses, and Certificates: For the Owner's records, submit copies of permits, licenses, certifications, inspection reports, releases, jurisdictional settlements, notices, receipts for fee payments, judgments, and similar documents, correspondence and records established in conjunction with compliance with standards and regulations bearing upon performance of the Work.

PART 2 - PRODUCTS

Not Applicable

PART 3 - EXECUTION

Not Applicable

END OF SECTION

SECTION 01004
SPECIFICATION OUTLINE

PART 1 - GENERAL

1.01 SUMMARY

A. The purpose of this section is to describe the organization and format to which the Specification has been prepared. This section is intended as an aid to the comprehension of the specification.

1.02 SPECIFICATION FORMAT

A. The Specification has been prepared in accordance with Construction Specifications Institute (CSI) Format

B. The CSI format is subdivided into 16 major divisions. Divisions form the framework of this Specification and contain the technical requirements for the category of work within each division. Divisions that are not applicable to this specification are not used.

C. Sections within each division describe the specific requirements for different units of work based on trade or type of work. Sections within divisions are arranged in numerical order; however, section numbers may be assigned differently in separate divisions. Page numbering is subordinate to section numbering.

D. Sections are sub-divided into three distinct groupings of related information as follows:
   1. Part 1 - GENERAL: Defines the administrative and procedural requirements unique to the section.
   2. Part 2 - PRODUCTS: Details the quality and features of items required for the project.
   3. Part 3 - EXECUTION: Details the incorporation of the products into the project.

   Most sections contain all three sub-divisions; however, they are included only where needed. Paragraph designations are subordinate to sub-divisions.

E. Many sections do not stand alone and are related to other portions of the Subcontract documents. Some sections are specific extensions of, or are governed by the general requirements of Division 1. Requirements of the Subcontract Documents shall apply as a whole, regardless of any overlapping of various portions of the specification.

F. This specification has been written in the imperative mood and, in some cases, in a streamlined form. The imperative language is directed to the Contractor, unless specifically noted otherwise.

1.03 CLARIFICATIONS

A. Most sections begin with a paragraph in Part 1 entitled "Summary" or "Scope of Work". These paragraphs provide a brief description of the work specified in that Section. These descriptions are not intended to be all-inclusive, but provide a brief clarification of the particular subject matter in the specification.

B. Some technical sections contain a paragraph entitled "Related Sections" or "Related Work Specified Elsewhere". This paragraph lists some of the related work specified in other sections

SECTION 01010
SUMMARY OF WORK

PART 1 - GENERAL

1.01 SUMMARY

A. Project identification:

TEXAS DEPARTMENT OF TRANSPORTATION
AUSTIN DISTRICT, TRAVIS COUNTY
South Travis Area Engineer & Maintenance Facility
26.238 acres out of Santiago Del Valle Grant, Abstract No. 24
Travis County, Austin, Texas

B. Project summary:
1. This project consists of Four buildings and all related site work. Major components of site work consist of site roadways, parking lots, asphalt paving, concrete driveways, concrete curb and gutter, security fencing and gates, concrete walks, drainage structures and connection of building to utility systems.

   Building 1: Office Building. Slab on grade foundation, with a pre-engineered metal building structure with roof purlins, roof insulation board and standing seam metal roof, metal studs and stone veneer exterior wall, forced air DX heating and cooling system.

   Building 2: Maintenance. Connected to Building 1. Slab on grade foundation. Pre-engineered metal building structure with roof purlins, standing seam metal roof and metal wall panels, infrared heating in Shop and Storage areas, compressed air distribution system, and ventilation system.

   Building 3. Laboratory/Storage. Connected to Building 1 with breezeway. Slab on grade foundation. Pre-engineered metal building structure with roof purlins, standing seam metal roof and metal wall panels, forced air DX heating and cooling in Lab and related spaces.

   Building 4. Vehicle Storage. Slab on grade foundation. Pre-engineered metal building structure with roof purlins, standing seam metal roof and metal wall panels.

C. Particular project requirements:
1. Concurrent work by Owner or others: Owner reserves the right to conduct minor work with his own forces or separate contractors during the construction. Work will be coordinated with the contractor.
2. Contractor will have unrestricted access to site.

D. Permits and Fees: Apply for, obtain, and pay for permits, if applicable, fees, and utility company back charges required to perform the work. Submit copies to Owner.

E. Codes: Comply with applicable codes and regulations of authorities having jurisdiction. Submit copies of inspection reports, notices and similar communications to Owner. Primary code is the International Building Code, 2003.

F. Dimensions: Verify dimensions indicated on drawings with field dimensions before fabrication or ordering of materials. Do not scale drawings.

G. Existing Conditions: Notify Owner of existing conditions differing from those indicated on the drawings. Do not remove or alter structural components without prior written approval.

H. Coordination:
   1. Coordinate the work of all trades.
   2. Prepare coordination drawings for areas above ceilings where close tolerances are required between building elements and mechanical and electrical work.
   3. Verify location of utilities and existing conditions prior to beginning work.

I. Installation Requirements, General:
   1. Inspect substrates and report unsatisfactory conditions in writing.
   2. Do not proceed until unsatisfactory conditions have been corrected.
   3. Take field measurements prior to fabrication where practical. Form to required shapes and sizes with true edges, lines and angles. Provide inserts and templates as needed for work of other trades.
   4. Install materials in accordance with manufacturer's instructions and approved submittals.
   5. Install materials in proper relation with adjacent construction and with proper appearance.
   6. Restore units damaged during installation. Replace units which cannot be restored at no additional expense to the Owner.
   7. Refer to additional installation requirements and tolerances specified under individual specification sections.

J. Definitions:
   1. Provide: Furnish and install, complete with all necessary accessories, ready for intended use. Pay for all related costs.
   2. Approved: Acceptance of item submitted for approval. Not a limitation or release for compliance with the Contract Documents or regulatory requirements. Refer to limitations of 'Approved' in General and Supplementary Conditions.

K. Intent: Drawings and specifications are intended to provide the basis for proper completion of the work suitable for the intended use. Anything not expressly set forth but which is reasonable implied or necessary for proper performance of the project shall be included.

L. Writing style: Specifications are written in the imperative mode. Except where specifically intended otherwise, the subject of all imperative statements is the Contractor. For example, 'Provide tile' means 'Contractor shall provide tile.'

PART 2 - PRODUCTS

Not applicable to this section.

PART 3 – EXECUTION

Not applicable to this section.

END OF SECTION

of the Subcontract Documents. These listings are not intended to be all-inclusive. They are presented as a means of aiding the Subcontractor in locating other specification sections containing work that has a close relationship with the work specified in that section. The requirements of the Subcontract Documents, including all specifications, shall apply as a whole.

C. Reference standards are incorporated into the specifications by reference number, title or other designations. The provisions of these standards become a part of the specification as though included in their entirety. When there is a conflict or discrepancy between a reference standard and the specification or with another reference standard, the more stringent requirements shall apply.
D. In the event of a Discrepancy between a drawing and the specification, the specification shall govern.

E. No typographical or other error on drawings shall relieve the Sub-Contractor from his responsibility to perform the intent of this Subcontract.

PART 2 - PRODUCTS

Not Used

PART 3 - EXECUTION

Not Used

END OF SECTION

04600 – Cast Stone

DIVISION 5 – METALS

05312 - Steel Roof Deck
05500 – Metal Fabrications

DIVISION 6 - WOOD AND PLASTIC

06100 – Carpentry Work
06220 - Millwork

DIVISION 7 - THERMAL AND MOISTURE PROTECTION

07160 - Bituminous Damp Proofing
07193 - Plastic Vapor Barrier
07200 - Roof Insulation Board
07213 - Fibrous Batt Insulation
07710 - Roof Curb
07900 - Joint Sealers

DIVISION 8 - DOORS AND WINDOWS

08110 - Steel Doors and Frames
08210 - Wood Doors
08330 - Rolling Service Doors
08410 - Aluminum Entrances and Storefronts
08520 - Aluminum Windows
08710 - Finish Hardware
08800 - Glazing

DIVISION 9 - FINISHES

09110 – Metal Stud Framing System
09220 - Portland Cement Plaster
09260 - Gypsum Board System
09300 - Ceramic Tile
09510 – Suspended Acoustical Ceilings
09650 - Resilient Flooring
09900 - Painting
09910 - Painting Fueling System
09970 - Concrete Floor Sealer

DIVISION 10 - SPECIALTIES

10105 - Visual Display Boards
10165 - Toilet Compartments
10350 - Flagpoles
10425 - Signage
10500 - Metal Lockers
10522 - Fire Extinguishers & Cabinets
10800 - Toilet Accessories

DIVISION 11 - EQUIPMENT

11140 - Fuel Dispensing System

DIVISION 12 - FURNISHINGS

12512 - Blinds and Shades

DIVISION 13 - SPECIAL CONSTRUCTION

13120 - Pre-Engineered Buildings

DIVISION 14 - CONVEYING SYSTEMS

Not Used

DIVISION 15 – MECHANICAL

15050 – Basic Mechanical Requirements
15060 – Supports and Anchors
15090 – Piping Insulation
15097 - Ductwork Insulation
15210 – Reciprocating Air Compressors
15400 – Plumbing, Piping, and Associated Materials
15540 – Fuel Fired Heaters
15761 – Ductless Air Conditioning Systems
15767 – Heat Pump Air Conditioning Systems
15810 - Ductwork
15820 – Ductwork Accessories
15830 – Fans
15850 – Air Outlets and Inlets
15950 – Testing, Adjusting, and Balancing

DIVISION 16 – ELECTRICAL

16010 - Basic Electrical Requirements
16060 – Grounding and Bonding
16070 - Electrical Hangers and Supports
16075 – Electrical Identification
16123 – Building Wire and Cable
16130 – Raceway and Boxes
16140 – Wiring Devices
16150 – Wiring Connections
16210 – Electrical Utility Service
16235 – Engine Generators
16411 - Enclosed Switches
16442 – Panelboards
16491 – Fuses
16510 – Interior Luminaries
16530 – Emergency Lighting
16710 – Telecommunications Cabling
16722 - Gas Monitoring System

LIST OF DRAWINGS

TITLE SHEET

ARCHITECTURAL:

G1.1	ABBREVIATIONS AND SYMBOLS
A1.0	OVERALL SITE PLAN
A1.1	SITE PLAN
A1.2	SITE DETAILS
A1.3	SITE DETAILS
A2.1	FLOOR PLAN -Bldg. 1
A2.2	FLOOR PLAN - Bldg. 2
A2.3	FLOOR PLAN - Bldg. 3
A2.4	FLOOR PLAN - Bldg. 4
A3.1	ROOF PLAN - Bldg. 1
A3.2	ROOF PLAN - Bldg. 2
A3.3	ROOF PLAN - Bldg. 3
A3.4	ROOF PLAN - Bldg. 4
A4.1	REFLECTED CEILING PLAN - Bldg. 1
A4.2	REFLECTED CEILING PLAN - Bldg. 2
A4.3	REFLECTED CEILING PLAN - Bldg. 3
A4.4	REFLECTED CEILING PLAN - Bldg. 4
A5.1	EXTERIOR ELEVATIONS – Bldg. 1
A5.2	EXTERIOR ELEVATIONS – Bldg. 1
A5.3	EXTERIOR ELEVATIONS – Bldg. 2
A5.4	EXTERIOR ELEVATIONS - Bldg. 3
A5.5	EXTERIOR ELELATIONS - Bldg. 4
A6.1	INTERIOR ELEVATIONS
A6.2	INTERIOR ELEVATIONS
A6.3	INTERIOR ELEVATIONS
A6.4	INTERIOR ELEVATIONS
A6.5	INTERIOR ELEVATIONS
A7.1	BUILDING SECTIONS
A7.2	BUILDING SECTIONS
A7.3	BUILDING SECTIONS
A8.1	WALL SECTIONS
A8.2	WALL SECTIONS / DETAILS
A8.3	WALL SECTIONS
A8.4	WALL SECTIONS
A8.5	WALL SECTIONS
A8.6	PARTITION TYPES
A9.1	DOOR AND WINDOW SCHEDULE
A9.2	DOOR DETAILS
A9.3	DOOR AND WINDOW DETAILS
A9.4	DETAILS
A11.1	TEXAS ACCESSIBILITY STANDARDS

CIVIL:

C1.0	DEMOLITION / EROSION SEDIMENT

C1.1	GENERAL NOTES
C1.2	DIMENSIONAL PLAN
C2.0	UTILITY PLAN
C3.0	GRADING PLAN
C4.0	UTILITY DETAILS
C5.0	SITE / PAVING / DRAINAGE DETAILS
C6.0	TEMPORARY EROSION CONTROL (1)
C7.0	TEMPORARY EROSION CONTROL (2)

STRUCTURAL:

S1.1	STRUCTURAL NOTES
S2.1	FOUNDATION PLAN – Bldg. 1
S2.2	FOUNDATION PLAN- Bldg. 1
S2.3	FOUNDATION PLAN - Bldg. 2
S2.4	FOUNDATION PLAN - Bldg. 3
S3.1	FOUNDATION DETAILS
S3.2	FOUNDATION DETAILS
S3.3	FOUNDATION DETAILS
S4.1	FRAMING PLAN-Bldg. 1
S4.2	FRAMING PLAN - Bldg. 1
S4.3	FRAMING PLAN - Bldg. 2
S4.4	FRAMING PLAN - Bldg. 3
S4.5	FRAMING SECTIONS

MECHANICAL:

M2.1	MECHANICAL PLAN - Bldg. 1
M2.2	MECHANICAL PLAN – Bldg. 1
M2.3	MECHANICAL PLAN – Bldg. 2
M2.4	MECHANICAL PLAN - Bldg. 3
M4.1	MECHANICAL SCHEDULES
M4.2	MECHANICAL SCHEDULES
M5.1	MECHANICAL DETAILS

PLUMBING:

P2.1	PLUMBING PLAN - Bldg. 1
P2.2	PLUMBING PLAN – Bldg. 1
P2.3	PLUMBING PLAN – Bldg. 2
P3.1	PLUMBING RISER DIAGRAMS
P3.2	PLUMBING RISER DIAGRAMS
P4.1	PLUMBING SCHEDULES
P5.1	PLUMBING DETAILS

ELECTRICAL:

PE1.1	ELECTRICAL AND GAS SITE PLAN
E2.1	LIGHTING PLAN - Bldg. 1
E2.2	LIGHTING PLAN – Bldg. 1
E2.3	LIGHTING PLAN – Bldg. 2
E2.4	LIGHTING PLAN - Bldg. 3

E2.5	POWER PLAN – Bldg. 1
E2.6	POWER PLAN – Bldg. 1
E2.7	POWER PLAN - Bldg. 2
E2.8	POWER PLAN - Bldg. 3
E2.9	GAS DETECTION PLAN - Bldg. 1
E2.91	POWER AND SPECIAL SYSTEMS PLAN - FUEL STATION
E3.1	ELECTRICAL RISER, LEGEND & LIGHTING SCHEDULE
E4.1	ELECTRICAL PANEL BOARD SCHEDULES
E4.2	ELECTRICAL PANEL BOARD SCHEDULES
E5.1	ELECTRICAL DETAILS
EDV	VOICE & DATA DETAILS
FS.2.1	FUEL STATION SCHEDULE & PLAN

SECTION 01002
DEFINITIONS AND STANDARDS

PART 1 - GENERAL

1.01 RELATED DOCUMENTS

A. Drawings and general provisions of Contract, including General and Supplementary Conditions and other Division 1 Specification Sections, apply to this Section.

1.02 SUMMARY

This section specifies administrative requirements for compliance with governing regulations, codes and standards.

A. Requirements include obtaining permits, licenses, inspections, releases and similar documentation, as well as payments, statements and similar requirements associated with regulations, codes and standards.

1.03 DEFINITIONS

A. General: Definitions contained in this Article are not necessarily complete, but are general to the extent that they are not defined more explicitly elsewhere in the Contract documents.

B. Indicated: Refers to graphic representations, notes or schedules on the Drawings, or other Paragraphs or Schedules in Specifications, and similar requirements in Contract Documents. Where terms such as "shown," "noted," "scheduled," and "specified" are used, it is to help locate the reference; not limitation on location is intended except as specifically noted.

C. Directed: Terms such as "directed," "requested," "authorized," "selected," "approved," "required," and "permitted" mean "directed by the Architect/Engineer," "requested by the Architect/Engineer," and similar phrases. However, no implied meaning shall be interpreted to extend the Architect/Engineer's responsibility into the Contractor's area of construction supervision.

D. Approve: The term "approved" where used in conjunction with the Architect/Engineer's action on the Contractor's submittals, applications, and requests, is limited to the responsibilities and duties of the Architect/Engineer stated in General and Supplementary Conditions. Such approval shall not release the Contractor from responsibility to fulfill Contract Document requirements, unless otherwise provided in the Contract Documents.

E. Regulation: The term "Regulations" includes laws, statutes, ordinances and lawful orders issued by authorities having jurisdiction, as well as rules, conventions and agreements within the construction industry that control performance of the Work, whether they are lawfully imposed by authorities having jurisdiction or not.

F. Furnish: The term "furnish" is used to mean "supply and deliver to the Project site, ready for unloading, unpacking, assembly, installation, and similar operations."

G. Install: The term "install" is used to describe operations at project site including the actual "unloading, unpacking, assembly, erection, placing, anchoring, applying, working to dimension, finishing, curing, protecting, cleaning and similar operations.

H. Provide: The term "provide" means "to furnish and install, complete and ready for use".

I. Installer: An "Installer" is an entity engaged by the Contractor, either as an employee, subcontractor or sub-subcontractor for performance of a particular construction activity, including installation, erection, application and similar operations. Installers are required to be experienced in the construction they are engaged to perform.
   1. The term "experienced," when used with the term "Installer" means having a minimum of 5 previous Projects similar in size and scope to this Project and familiar with the precautions required, and has complied with requirements of the authority having jurisdiction.

J. Project Site_is the space available to the Contractor for performance of the Work, either exclusively or in conjunction with others performing other construction as part of the Project. The extent of the Project Site is shown on the Drawings, and may or may not be identical with the description of the land upon which the Project is to be built.

K. Testing Laboratories: A "testing laboratory" is an independent entity engaged to perform specific inspections or tests, either at the Project Site or elsewhere, and to report on, and, if required, to interpret results of those inspections or tests.

1.04 SPECIFICATION FORMAT AND CONTENT EXPLANATION

This Article is provided to help the user of these specifications understand the format, language, implied requirements, and similar conventions. None of the explanations shall be interpreted to modify the substance of Contract requirements.

A. Specification Format: These Specifications are organized into Divisions, Sections or Trade Headings based on the Construction Specifications Institute's 16 Division format and the MASTERFORMAT numbering system. This organization conforms generally to recognize construction industry practice.

B. Specification Content: This Specification has been produced employing conventions in the use of language and the intended meaning of certain terms, words, and phrases when used in particular situations or circumstances. These conventions are explained as follows:
   1. Language used in the Specifications and other Contract Documents is the abbreviated type. Implied words and meanings will be appropriately interpreted. Singular words will be interpreted as plural and plural words interpreted as singular where applicable and where the full context of the Contract Documents so indicates.
   2. Imperative Language is used generally in the Specifications. Requirements expressed imperatively are to be performed by the Contractor. At certain locations in the text, for clarity, subjective language is used to describe responsibilities that must be fulfilled indirectly by the Contractor or by others when so noted.

C. Assignment of Specialists: The Specifications requires that certain specific Construction activities shall be performed by specialists who are recognized experts in the operations to be performed. The specialists must be engaged for those activities, and the assignments are requirements over which the Contractor has no choice or option. Nevertheless, the ultimate responsibility for fulfilling Contract requirements remains with the Contractor.

1. This requirement shall not be interpreted to conflict with enforcement of building codes and similar regulations governing the Work. It is also not intended to interfere with local trade union jurisdictional settlements and similar conventions.
2. Trades: Use of titles such as "carpentry" is not intended to imply that certain construction activities must be performed by accredited or unionized individuals of a corresponding generic name, such as "carpenter". It also does not imply that requirements specified apply exclusively to trades persons of the corresponding generic name.

1.05 DRAWING SYMBOLS

A. Graphic Symbols used on the Drawings are those recognized in the construction industry for purposes indicated. Where not otherwise noted, symbols are defined by "Architectural Graphic Standards," published by John Wiley & Sons, Inc., seventh edition.

B. Mechanical/Electrical Drawings: Graphic symbols used on mechanical and electrical Drawings are generally aligned with symbols recommended by ASHRAE. Where appropriate, they are supplemented by more specific symbols recommended by technical associations including, ASME, ASPE, IEEE and similar organizations. Refer instances of uncertainty to the Architect/Engineer for clarification before proceeding.

1.06 INDUSTRY STANDARDS

A. Applicability of Standards: Except where Contract Documents include more stringent requirements, applicable construction industry standards have the same force and effect as if bound or copied directly into Contract Documents. Such standards are made a part of the Contract Documents by reference. Individual Sections indicate which codes and standards the Contractor must keep available at the Project Site for reference.
   1. Referenced standards take precedence over standards that are not referenced but recognized in the construction industry as applicable.
   2. Non-referenced standards are not directly applicable to the Work, except as a general requirement of whether the Work complies with construction industry standards.
   3. Non-referenced standards: Except as otherwise limited by the Contract Documents, standards not referenced by recognized in the industry as applicable will be enforced for performance of the Work. The Architect/Engineer will decide whether a code or standard is applicable, or which of several are applicable.

B. Publication Dates: Where compliance with an industry standard is required, comply with standard in effect as of date of Contract Documents.
   1. Updated Standards: At the request of the Architect/Engineer, Contractor or authority having jurisdiction, submit a Change Order proposal where an applicable code or standard has been revised and reissued after the date of the Contract Documents and before performance of Work affected. The Architect/Engineer will decide whether to issue a Change Order to proceed with the updated standard.

C. Conflicting Requirements: Where compliance with two or more standards is specified, and they establish different or conflicting requirements for minimum quantities or quality levels, the most stringent requirement will be enforced, unless the Contract Documents indicate otherwise. Refer requirements that are different, but apparently equal, and uncertainties as to which quality level is more stringent to the Architect/Engineer for a decision before proceeding.
   1. Minimum Quantities or Quality Levels: In every instance the quantity or quality level shown or specified shall be the minimum to be provided or performed. The actual

installation may comply exactly, within specified tolerances, with the minimum quantity or quality specified, or it may exceed that minimum within reasonable limits. In complying with these requirements, indicated numeric values are minimum or maximum values, as noted, or appropriate for the context of the requirements. Refer instances of uncertainty to the Architect/Engineer for decision **before** proceeding.

D. Copies of standards: Each entity engaged in construction on the Project is required to be familiar with industry standards applicable to that entities' Construction activity. Copies of applicable standards are not bound with the Contract Documents.
   1 Where copies of standards are needed for performance of a required construction activity, the Contractor shall obtain copies directly from the publication source.
   2. Although copies of standards needed for enforcement of requirements may be part of required submittals, the Architect/Engineer reserves the right to require the Contractor to submit additional copies as necessary for enforcement of requirements.

E. Abbreviations and Names: Trade association names and titles of general standards are frequently abbreviated. Where acronyms or abbreviations are used in the Specifications or other Contract Documents, they mean the recognized name of the trade association, standards generating organization, authority having jurisdiction or other entity applicable to the context of the text provision. Refer to the "Encyclopedia of Associations," published by Gale Research Co., available in most libraries.

F. Abbreviations and Names: Trade association names and titles of general standards are frequently abbreviated. The following acronyms as referenced in Contract Documents are defined to mean the associated names. Names and addresses are subject to change, and are believed to be, but are not assured to be, accurate as of date of Contract Documents:

1.	AASHTO	American Association of State Highway and Transportation Officials 444 No. Capitol St., Suite 225, Washington, DC 20001	202-624-5800
2.	ACI	American Concrete Institute, P. O. Box 19150 Detroit, MI 48219	313-532-2600
3.	ACIL	American Council of Independent Laboratories 1725 K Street, NW Washington, DC 20006	202-887-5872
4.	ACPA	American Concrete Pipe Association 8320 Old Courthouse Road Vienna, VA 22180	703-821-1990
5.	AGA	American Gas Association 1515 Wilson Blvd. Arlington, VA 22209	703-841-8400
6.	AI	Asphalt Institute Asphalt Institute Building College Park, MD 20740	301-277-4258
7.	AIA	American Institute of Architects 1735 New York Ave., NW Washington, DC 20006	202-626-7300
8.	AIHA	American Industrial Hygiene Association 475 Wolf Ledges Parkway Akron, OH 44311	216-762-7294
9.	AISC	American Institute of Steel Construction	

		400 No. Michigan Ave., 8th Floor Chicago, IL 60611	312-670-2400
10.	AISI	American Iron and Steel Institute 1000 Sixteenth St., N.W. Washington, DC 20036	202-452-7100
11.	ALI	Associated Laboratories 641 So. Vermont Street Palatine, IL 60067	312-358-7400
12.	ANSI	American National Standards Institute 1430 Broadway New York, NY 10018	212-354-3300
13.	API	American Petroleum Institute 1220 L Street, N.W. Washington, DC 20005	202-682-8000
14.	ASC	Adhesive and Sealant Council 1500 Wilson Blvd., Suite 515 Arlington, VA 22209	703-841-1112
15.	ASME	American Society of Mechanical Engineers 345 East 47th St. New York, New York 10017	212-705-7722
16.	ASPE	American Society of Plumbing Engineers 3617 Thousand Oaks Blvd., Suite 210 Westlake, CA 91362	805-495-7120
17.	ASSE	American Society of Sanitary Engineering P. O. Box 40362 Bay Village, OH 44140	216-835-3040
18.	ASTM	ASTM 1916 Race St. Philadelphia, PA 19103	215-599-5400
19.	AWS	American Welding Society P. O. Box 351040 550 Le Jeune Road, NW Miami, FL 33135	305-443-9353
20.	AWWA	American Water Works Association 6666 W. Quincy Ave. Denver, CO 80235	303-794-7711
21.	CRSI	Concrete Reinforcing Steel Institute 933 Plum Grove Road Schaumburg, IL 60195	312-490-1700
22.	IEEE	Institute of Electrical and Electronic Engineers 345 E. 47th St. New York, NY 10017	
23.	ISA	Instrument Society of America P. O. Box 12277 67 Alexander Drive Research Triangle Park, NC 27709	919-549-8411
24.	LPI	Lightning Protection Institute P. O. Box 458 Harvard, IL 60033	815-943-7211
25.	MCAA	Mechanical Contractor's Association of America	

		5410 Grosvenor Lane, Suite 120 Bethesda, MD 20814	301-897-0770
26.	MSS	Manufacturers Standardization Society of the Valve and Fittings Industry 127 Park St., NE Vienna, VA 22180	703-281-6613
27.	NAPA	National Asphalt Pavement Association Calvert Building, Suite 620 6811 Kenilworthy Ave. Riverdale, MD 20737	301-779-4880
28.	NEC	National Electric Code (by NFPA)	
29.	NECA	National Electrical Contractors Association 7315 Wisconsin Ave. Bethesda, MD 20814	301-657-3110
30.	NEMA	National Electrical Manufacturers Association 2101 L Street, NW, Suite 300 Washington, DC 20037	202-457-8400
31.	NFPA	National Fire Protection Association Batterymarch Park Quincy, MA 02269	617-770-3000
32.	NPCA	National Paint and Coatings Association 1500 Rhode Island Ave., NW Washington, DC 20005	202-462-6272
33.	PDI	Plumbing and Draining Institute (c/o Austin O. Roche, Jr.) 5342 Boulevard Pl. Indianapolis, IN 46208	317-251-5298
34.	PEI	Petroleum Equipment Institute 6514 East 69th St. Tulsa, OK 74133-1719	918-494-9696
35.	SSPC	Steel Structures Painting Council 4400 Fifth Avenue Pittsburgh, PA 15213	412-578-3327
36.	UL	Underwriters Laboratories 333 Pfingsten Rd. Northbrook, IL 60062	312-272-8800
37.	WRI	Wire Reinforcement Institute 8361 A Greensboro Drive McLean, VA 22102	703-790-9790
38.	WSC	Water Systems Council 600 S. Federal St., Suite 400 Chicago, IL 60605	312-922-6222
39.	WWPA	Woven Wire Products Association 2515 No. Nordica Ave. Chicago, IL 60635	312-637-1359

G. Federal Government Agencies: Names and titles of federal government standard or Specification producing agencies are frequently abbreviated. The following acronyms or abbreviations referenced in the Contract Documents indicate names of standard or Specification

producing agencies of the federal government. Names and addresses are subject to change, but are believed to be, but are not assured to be, accurate and up-to-date as of the date of the Contract Documents.

1.	CE	Corps of Engineers (US Dept. of the Army) Chief of Engineers - Referral Washington, DC 20314	202-693-6456
2.	CFR	Code of Federal Regulations Available from the Government Printing Office North Capitol Street Between G and H Streets, NW Washington, DC 20402 (Material is usually first published in the Federal Register)	202-783-3238
3.	CPSC	Consumer Product Safety Commission 1111 Eighteenth St., NW Washington, DC 20207	202-634-7700
4.	CS	Commercial Standard US Dept. of Commerce Government Printing Office Washington, DC 20402	202-377-2000
5.	DOC	Department of Commerce 14th St and Constitution Ave., NW Washington, DC 20230	202-377-2000
6.	DOT	Department of Transportation 400 Seventh St. SW Washington, DC 20590	202-426-4000
7.	EPA	Environmental Protection Agency 401 M St., SW Washington, DC 20460	202-829-3535
8.	FS	Federal Specification (General Services Administration) Specifications Unit (WFSIS) 7th and D St., SW Washington, DC 20406	202-472-2205 202-472-2140
9.	GSA	General Services Administration F Street and 18th St., NW Washington, DC 20405	202-655-400
10.	MIL	Military Standardization Documents (US Department of Defense) Naval Publications and Forms Center 5801 Tabor Ave. Philadelphia, PA 19120	
11.	NBS	National Bureau of Standards (US Dept. of Commerce) Gaithersburg, MD 20234	301-921-1000
12.	OSHA	Occupational Safety and Health Administration (US Dept. of Labor) Government Printing Office Washington, DC 20402	202-783-3238
13.	PS	Product Standard of NBS	

(US Dept. of Commerce)
Government Printing Office
Washington, DC 20402 202-783-3238

1.07 GOVERNING REGULATIONS/AUTHORITIES:

The Architect/Engineer has contacted authorities having jurisdiction where necessary to obtain information necessary for the preparation of Contract Documents; that information may or may not be of significance to the Contractor. Contact authorities having jurisdiction directly for information and decisions having a bearing on the Work.

A. Copies of Correspondence: During preparation of the Contract Documents, the Architect/Engineer has maintained a file containing correspondence with authorities having jurisdiction. This file is available at the Architect/Engineer's office for reference. If requested, the Architect/Engineer will provide copies of correspondence at cost of reproduction.

B. Copies of Regulations: Obtain copies of the following regulations and retain at the Project Site, available for reference by parties who have a reasonable need for such reference.

C. Trade Union Jurisdictions: The Contractor shall maintain, and require subcontractors to maintain complete current information on jurisdictional matters, regulations and pending actions, as applicable to construction activities. The manner in which Contract Documents have been organized and subdivided is not intended to indicate of trade union or jurisdictional agreements.
   1. Discuss new developments at Project meetings at the earliest feasible dates. Record relevant information and actions agreed upon.
   2. Assign and subcontract construction activities, and employ tradesmen and laborers, in a manner that will not unduly risk jurisdictional disputes that could result in conflicts, delays, claims and losses.

1.08 SUBMITTALS

A. Permits, Licenses, and Certificates: For the Owner's records, submit copies of permits, licenses, certifications, inspection reports, releases, jurisdictional settlements, notices, receipts for fee payments, judgments, and similar documents, correspondence and records established in conjunction with compliance with standards and regulations bearing upon performance of the Work.

PART 2 - PRODUCTS

Not Applicable

PART 3 - EXECUTION

Not Applicable

END OF SECTION

SECTION 01004
SPECIFICATION OUTLINE

PART 1 - GENERAL

1.01 SUMMARY

A. The purpose of this section is to describe the organization and format to which the Specification has been prepared. This section is intended as an aid to the comprehension of the specification.

1.02 SPECIFICATION FORMAT

A. The Specification has been prepared in accordance with Construction Specifications Institute (CSI) Format

B. The CSI format is subdivided into 16 major divisions. Divisions form the framework of this Specification and contain the technical requirements for the category of work within each division. Divisions that are not applicable to this specification are not used.

C. Sections within each division describe the specific requirements for different units of work based on trade or type of work. Sections within divisions are arranged in numerical order; however, section numbers may be assigned differently in separate divisions. Page numbering is subordinate to section numbering.

D. Sections are sub-divided into three distinct groupings of related information as follows:
   1. Part 1 - GENERAL: Defines the administrative and procedural requirements unique to the section.
   2. Part 2 - PRODUCTS: Details the quality and features of items required for the project.
   3. Part 3 - EXECUTION: Details the incorporation of the products into the project.

   Most sections contain all three sub-divisions; however, they are included only where needed. Paragraph designations are subordinate to sub-divisions.

E. Many sections do not stand alone and are related to other portions of the Subcontract documents. Some sections are specific extensions of, or are governed by the general requirements of Division 1. Requirements of the Subcontract Documents shall apply as a whole, regardless of any overlapping of various portions of the specification.

F. This specification has been written in the imperative mood and, in some cases, in a streamlined form. The imperative language is directed to the Contractor, unless specifically noted otherwise.

1.03 CLARIFICATIONS

A. Most sections begin with a paragraph in Part 1 entitled "Summary" or "Scope of Work". These paragraphs provide a brief description of the work specified in that Section. These descriptions are not intended to be all-inclusive, but provide a brief clarification of the particular subject matter in the specification.

B. Some technical sections contain a paragraph entitled "Related Sections" or "Related Work Specified Elsewhere". This paragraph lists some of the related work specified in other sections

SECTION 01010
SUMMARY OF WORK

PART 1 - GENERAL

1.01 SUMMARY

A. Project identification:

TEXAS DEPARTMENT OF TRANSPORTATION
AUSTIN DISTRICT, TRAVIS COUNTY
South Travis Area Engineer & Maintenance Facility
26.238 acres out of Santiago Del Valle Grant, Abstract No. 24
Travis County, Austin, Texas

B. Project summary:
1. This project consists of Four buildings and all related site work. Major components of site work consist of site roadways, parking lots, asphalt paving, concrete driveways, concrete curb and gutter, security fencing and gates, concrete walks, drainage structures and connection of building to utility systems.

   Building 1: Office Building. Slab on grade foundation, with a pre-engineered metal building structure with roof purlins, roof insulation board and standing seam metal roof, metal studs and stone veneer exterior wall, forced air DX heating and cooling system.

   Building 2: Maintenance. Connected to Building 1. Slab on grade foundation. Pre-engineered metal building structure with roof purlins, standing seam metal roof and metal wall panels, infrared heating in Shop and Storage areas, compressed air distribution system, and ventilation system.

   Building 3. Laboratory/Storage. Connected to Building 1 with breezeway. Slab on grade foundation. Pre-engineered metal building structure with roof purlins, standing seam metal roof and metal wall panels, forced air DX heating and cooling in Lab and related spaces.

   Building 4. Vehicle Storage. Slab on grade foundation. Pre-engineered metal building structure with roof purlins, standing seam metal roof and metal wall panels.

C. Particular project requirements:
1. Concurrent work by Owner or others: Owner reserves the right to conduct minor work with his own forces or separate contractors during the construction. Work will be coordinated with the contractor.
2. Contractor will have unrestricted access to site.

D. Permits and Fees: Apply for, obtain, and pay for permits, if applicable, fees, and utility company back charges required to perform the work. Submit copies to Owner.

E. Codes: Comply with applicable codes and regulations of authorities having jurisdiction. Submit copies of inspection reports, notices and similar communications to Owner. Primary code is the International Building Code, 2003.

F. Dimensions: Verify dimensions indicated on drawings with field dimensions before fabrication or ordering of materials. Do not scale drawings.

G. Existing Conditions: Notify Owner of existing conditions differing from those indicated on the drawings. Do not remove or alter structural components without prior written approval.

H. Coordination:
   1. Coordinate the work of all trades.
   2. Prepare coordination drawings for areas above ceilings where close tolerances are required between building elements and mechanical and electrical work.
   3. Verify location of utilities and existing conditions prior to beginning work.

I. Installation Requirements, General:
   1. Inspect substrates and report unsatisfactory conditions in writing.
   2. Do not proceed until unsatisfactory conditions have been corrected.
   3. Take field measurements prior to fabrication where practical. Form to required shapes and sizes with true edges, lines and angles. Provide inserts and templates as needed for work of other trades.
   4. Install materials in accordance with manufacturer's instructions and approved submittals.
   5. Install materials in proper relation with adjacent construction and with proper appearance.
   6. Restore units damaged during installation. Replace units which cannot be restored at no additional expense to the Owner.
   7. Refer to additional installation requirements and tolerances specified under individual specification sections.

J. Definitions:
   1. Provide: Furnish and install, complete with all necessary accessories, ready for intended use. Pay for all related costs.
   2. Approved: Acceptance of item submitted for approval. Not a limitation or release for compliance with the Contract Documents or regulatory requirements. Refer to limitations of 'Approved' in General and Supplementary Conditions.

K. Intent: Drawings and specifications are intended to provide the basis for proper completion of the work suitable for the intended use. Anything not expressly set forth but which is reasonable implied or necessary for proper performance of the project shall be included.

L. Writing style: Specifications are written in the imperative mode. Except where specifically intended otherwise, the subject of all imperative statements is the Contractor. For example, 'Provide tile' means 'Contractor shall provide tile.'

PART 2 - PRODUCTS

Not applicable to this section.

PART 3 – EXECUTION

Not applicable to this section.

END OF SECTION

of the Subcontract Documents. These listings are not intended to be all-inclusive. They are presented as a means of aiding the Subcontractor in locating other specification sections containing work that has a close relationship with the work specified in that section. The requirements of the Subcontract Documents, including all specifications, shall apply as a whole.

C. Reference standards are incorporated into the specifications by reference number, title or other designations. The provisions of these standards become a part of the specification as though included in their entirety. When there is a conflict or discrepancy between a reference standard and the specification or with another reference standard, the more stringent requirements shall apply.
D. In the event of a Discrepancy between a drawing and the specification, the specification shall govern.

E. No typographical or other error on drawings shall relieve the Sub-Contractor from his responsibility to perform the intent of this Subcontract.

PART 2 - PRODUCTS

Not Used

PART 3 - EXECUTION

Not Used

END OF SECTION

SECTION 01002
DEFINITIONS AND STANDARDS

PART 1 - GENERAL

1.01 RELATED DOCUMENTS

A. Drawings and general provisions of Contract, including General and Supplementary Conditions and other Division 1 Specification Sections, apply to this Section.

1.02 SUMMARY

This section specifies administrative requirements for compliance with governing regulations, codes and standards.

A. Requirements include obtaining permits, licenses, inspections, releases and similar documentation, as well as payments, statements and similar requirements associated with regulations, codes and standards.

1.03 DEFINITIONS

A. General: Definitions contained in this Article are not necessarily complete, but are general to the extent that they are not defined more explicitly elsewhere in the Contract documents.

B. Indicated: Refers to graphic representations, notes or schedules on the Drawings, or other Paragraphs or Schedules in Specifications, and similar requirements in Contract Documents. Where terms such as "shown," "noted," "scheduled," and "specified" are used, it is to help locate the reference; not limitation on location is intended except as specifically noted.

C. Directed: Terms such as "directed," "requested," "authorized," "selected," "approved," "required," and "permitted" mean "directed by the Architect/Engineer," "requested by the Architect/Engineer," and similar phrases. However, no implied meaning shall be interpreted to extend the Architect/Engineer's responsibility into the Contractor's area of construction supervision.

D. Approve: The term "approved" where used in conjunction with the Architect/Engineer's action on the Contractor's submittals, applications, and requests, is limited to the responsibilities and duties of the Architect/Engineer stated in General and Supplementary Conditions. Such approval shall not release the Contractor from responsibility to fulfill Contract Document requirements, unless otherwise provided in the Contract Documents.

E. Regulation: The term "Regulations" includes laws, statutes, ordinances and lawful orders issued by authorities having jurisdiction, as well as rules, conventions and agreements within the construction industry that control performance of the Work, whether they are lawfully imposed by authorities having jurisdiction or not.

F. Furnish: The term "furnish" is used to mean "supply and deliver to the Project site, ready for unloading, unpacking, assembly, installation, and similar operations."

G. Install: The term "install" is used to describe operations at project site including the actual "unloading, unpacking, assembly, erection, placing, anchoring, applying, working to dimension, finishing, curing, protecting, cleaning and similar operations.

H. Provide: The term "provide" means "to furnish and install, complete and ready for use".

I. Installer: An "Installer" is an entity engaged by the Contractor, either as an employee, subcontractor or sub-subcontractor for performance of a particular construction activity, including installation, erection, application and similar operations. Installers are required to be experienced in the construction they are engaged to perform.
   1. The term "experienced," when used with the term "Installer" means having a minimum of 5 previous Projects similar in size and scope to this Project and familiar with the precautions required, and has complied with requirements of the authority having jurisdiction.

J. Project Site_is the space available to the Contractor for performance of the Work, either exclusively or in conjunction with others performing other construction as part of the Project. The extent of the Project Site is shown on the Drawings, and may or may not be identical with the description of the land upon which the Project is to be built.

K. Testing Laboratories: A "testing laboratory" is an independent entity engaged to perform specific inspections or tests, either at the Project Site or elsewhere, and to report on, and, if required, to interpret results of those inspections or tests.

1.04 SPECIFICATION FORMAT AND CONTENT EXPLANATION

This Article is provided to help the user of these specifications understand the format, language, implied requirements, and similar conventions. None of the explanations shall be interpreted to modify the substance of Contract requirements.

A. Specification Format: These Specifications are organized into Divisions, Sections or Trade Headings based on the Construction Specifications Institute's 16 Division format and the MASTERFORMAT numbering system. This organization conforms generally to recognize construction industry practice.

B. Specification Content: This Specification has been produced employing conventions in the use of language and the intended meaning of certain terms, words, and phrases when used in particular situations or circumstances. These conventions are explained as follows:
   1. Language used in the Specifications and other Contract Documents is the abbreviated type. Implied words and meanings will be appropriately interpreted. Singular words will be interpreted as plural and plural words interpreted as singular where applicable and where the full context of the Contract Documents so indicates.
   2. Imperative Language is used generally in the Specifications. Requirements expressed imperatively are to be performed by the Contractor. At certain locations in the text, for clarity, subjective language is used to describe responsibilities that must be fulfilled indirectly by the Contractor or by others when so noted.

C. Assignment of Specialists: The Specifications requires that certain specific Construction activities shall be performed by specialists who are recognized experts in the operations to be performed. The specialists must be engaged for those activities, and the assignments are requirements over which the Contractor has no choice or option. Nevertheless, the ultimate responsibility for fulfilling Contract requirements remains with the Contractor.

1. This requirement shall not be interpreted to conflict with enforcement of building codes and similar regulations governing the Work. It is also not intended to interfere with local trade union jurisdictional settlements and similar conventions.
2. Trades: Use of titles such as "carpentry" is not intended to imply that certain construction activities must be performed by accredited or unionized individuals of a corresponding generic name, such as "carpenter". It also does not imply that requirements specified apply exclusively to trades persons of the corresponding generic name.

1.05 DRAWING SYMBOLS

A. Graphic Symbols used on the Drawings are those recognized in the construction industry for purposes indicated. Where not otherwise noted, symbols are defined by "Architectural Graphic Standards," published by John Wiley & Sons, Inc., seventh edition.

B. Mechanical/Electrical Drawings: Graphic symbols used on mechanical and electrical Drawings are generally aligned with symbols recommended by ASHRAE. Where appropriate, they are supplemented by more specific symbols recommended by technical associations including, ASME, ASPE, IEEE and similar organizations. Refer instances of uncertainty to the Architect/Engineer for clarification before proceeding.

1.06 INDUSTRY STANDARDS

A. Applicability of Standards: Except where Contract Documents include more stringent requirements, applicable construction industry standards have the same force and effect as if bound or copied directly into Contract Documents. Such standards are made a part of the Contract Documents by reference. Individual Sections indicate which codes and standards the Contractor must keep available at the Project Site for reference.
   1. Referenced standards take precedence over standards that are not referenced but recognized in the construction industry as applicable.
   2. Non-referenced standards are not directly applicable to the Work, except as a general requirement of whether the Work complies with construction industry standards.
   3. Non-referenced standards: Except as otherwise limited by the Contract Documents, standards not referenced by recognized in the industry as applicable will be enforced for performance of the Work. The Architect/Engineer will decide whether a code or standard is applicable, or which of several are applicable.

B. Publication Dates: Where compliance with an industry standard is required, comply with standard in effect as of date of Contract Documents.
   1. Updated Standards: At the request of the Architect/Engineer, Contractor or authority having jurisdiction, submit a Change Order proposal where an applicable code or standard has been revised and reissued after the date of the Contract Documents and before performance of Work affected. The Architect/Engineer will decide whether to issue a Change Order to proceed with the updated standard.

C. Conflicting Requirements: Where compliance with two or more standards is specified, and they establish different or conflicting requirements for minimum quantities or quality levels, the most stringent requirement will be enforced, unless the Contract Documents indicate otherwise. Refer requirements that are different, but apparently equal, and uncertainties as to which quality level is more stringent to the Architect/Engineer for a decision before proceeding.
   1. Minimum Quantities or Quality Levels: In every instance the quantity or quality level shown or specified shall be the minimum to be provided or performed. The actual

installation may comply exactly, within specified tolerances, with the minimum quantity or quality specified, or it may exceed that minimum within reasonable limits. In complying with these requirements, indicated numeric values are minimum or maximum values, as noted, or appropriate for the context of the requirements. Refer instances of uncertainty to the Architect/Engineer for decision **before** proceeding.

D. Copies of standards: Each entity engaged in construction on the Project is required to be familiar with industry standards applicable to that entities' Construction activity. Copies of applicable standards are not bound with the Contract Documents.
   1 Where copies of standards are needed for performance of a required construction activity, the Contractor shall obtain copies directly from the publication source.
   2. Although copies of standards needed for enforcement of requirements may be part of required submittals, the Architect/Engineer reserves the right to require the Contractor to submit additional copies as necessary for enforcement of requirements.

E. Abbreviations and Names: Trade association names and titles of general standards are frequently abbreviated. Where acronyms or abbreviations are used in the Specifications or other Contract Documents, they mean the recognized name of the trade association, standards generating organization, authority having jurisdiction or other entity applicable to the context of the text provision. Refer to the "Encyclopedia of Associations," published by Gale Research Co., available in most libraries.

F. Abbreviations and Names: Trade association names and titles of general standards are frequently abbreviated. The following acronyms as referenced in Contract Documents are defined to mean the associated names. Names and addresses are subject to change, and are believed to be, but are not assured to be, accurate as of date of Contract Documents:

1.	AASHTO	American Association of State Highway and Transportation Officials 444 No. Capitol St., Suite 225, Washington, DC 20001	202-624-5800
2.	ACI	American Concrete Institute, P. O. Box 19150 Detroit, MI 48219	313-532-2600
3.	ACIL	American Council of Independent Laboratories 1725 K Street, NW Washington, DC 20006	202-887-5872
4.	ACPA	American Concrete Pipe Association 8320 Old Courthouse Road Vienna, VA 22180	703-821-1990
5.	AGA	American Gas Association 1515 Wilson Blvd. Arlington, VA 22209	703-841-8400
6.	AI	Asphalt Institute Asphalt Institute Building College Park, MD 20740	301-277-4258
7.	AIA	American Institute of Architects 1735 New York Ave., NW Washington, DC 20006	202-626-7300
8.	AIHA	American Industrial Hygiene Association 475 Wolf Ledges Parkway Akron, OH 44311	216-762-7294
9.	AISC	American Institute of Steel Construction	

		400 No. Michigan Ave., 8th Floor Chicago, IL 60611	312-670-2400
10.	AISI	American Iron and Steel Institute 1000 Sixteenth St., N.W. Washington, DC 20036	202-452-7100
11.	ALI	Associated Laboratories 641 So. Vermont Street Palatine, IL 60067	312-358-7400
12.	ANSI	American National Standards Institute 1430 Broadway New York, NY 10018	212-354-3300
13.	API	American Petroleum Institute 1220 L Street, N.W. Washington, DC 20005	202-682-8000
14.	ASC	Adhesive and Sealant Council 1500 Wilson Blvd., Suite 515 Arlington, VA 22209	703-841-1112
15.	ASME	American Society of Mechanical Engineers 345 East 47th St. New York, New York 10017	212-705-7722
16.	ASPE	American Society of Plumbing Engineers 3617 Thousand Oaks Blvd., Suite 210 Westlake, CA 91362	805-495-7120
17.	ASSE	American Society of Sanitary Engineering P. O. Box 40362 Bay Village, OH 44140	216-835-3040
18.	ASTM	ASTM 1916 Race St. Philadelphia, PA 19103	215-599-5400
19.	AWS	American Welding Society P. O. Box 351040 550 Le Jeune Road, NW Miami, FL 33135	305-443-9353
20.	AWWA	American Water Works Association 6666 W. Quincy Ave. Denver, CO 80235	303-794-7711
21.	CRSI	Concrete Reinforcing Steel Institute 933 Plum Grove Road Schaumburg, IL 60195	312-490-1700
22.	IEEE	Institute of Electrical and Electronic Engineers 345 E. 47th St. New York, NY 10017	
23.	ISA	Instrument Society of America P. O. Box 12277 67 Alexander Drive Research Triangle Park, NC 27709	919-549-8411
24.	LPI	Lightning Protection Institute P. O. Box 458 Harvard, IL 60033	815-943-7211
25.	MCAA	Mechanical Contractor's Association of America	

		5410 Grosvenor Lane, Suite 120 Bethesda, MD 20814	301-897-0770
26.	MSS	Manufacturers Standardization Society of the Valve and Fittings Industry 127 Park St., NE Vienna, VA 22180	703-281-6613
27.	NAPA	National Asphalt Pavement Association Calvert Building, Suite 620 6811 Kenilworthy Ave. Riverdale, MD 20737	301-779-4880
28.	NEC	National Electric Code (by NFPA)	
29.	NECA	National Electrical Contractors Association 7315 Wisconsin Ave. Bethesda, MD 20814	301-657-3110
30.	NEMA	National Electrical Manufacturers Association 2101 L Street, NW, Suite 300 Washington, DC 20037	202-457-8400
31.	NFPA	National Fire Protection Association Batterymarch Park Quincy, MA 02269	617-770-3000
32.	NPCA	National Paint and Coatings Association 1500 Rhode Island Ave., NW Washington, DC 20005	202-462-6272
33.	PDI	Plumbing and Draining Institute (c/o Austin O. Roche, Jr.) 5342 Boulevard Pl. Indianapolis, IN 46208	317-251-5298
34.	PEI	Petroleum Equipment Institute 6514 East 69th St. Tulsa, OK 74133-1719	918-494-9696
35.	SSPC	Steel Structures Painting Council 4400 Fifth Avenue Pittsburgh, PA 15213	412-578-3327
36.	UL	Underwriters Laboratories 333 Pfingsten Rd. Northbrook, IL 60062	312-272-8800
37.	WRI	Wire Reinforcement Institute 8361 A Greensboro Drive McLean, VA 22102	703-790-9790
38.	WSC	Water Systems Council 600 S. Federal St., Suite 400 Chicago, IL 60605	312-922-6222
39.	WWPA	Woven Wire Products Association 2515 No. Nordica Ave. Chicago, IL 60635	312-637-1359

G. Federal Government Agencies: Names and titles of federal government standard or Specification producing agencies are frequently abbreviated. The following acronyms or abbreviations referenced in the Contract Documents indicate names of standard or Specification

producing agencies of the federal government. Names and addresses are subject to change, but are believed to be, but are not assured to be, accurate and up-to-date as of the date of the Contract Documents.

1.	CE	Corps of Engineers (US Dept. of the Army) Chief of Engineers - Referral Washington, DC 20314	202-693-6456
2.	CFR	Code of Federal Regulations Available from the Government Printing Office North Capitol Street Between G and H Streets, NW Washington, DC 20402 (Material is usually first published in the Federal Register)	202-783-3238
3.	CPSC	Consumer Product Safety Commission 1111 Eighteenth St., NW Washington, DC 20207	202-634-7700
4.	CS	Commercial Standard US Dept. of Commerce Government Printing Office Washington, DC 20402	202-377-2000
5.	DOC	Department of Commerce 14th St and Constitution Ave., NW Washington, DC 20230	202-377-2000
6.	DOT	Department of Transportation 400 Seventh St. SW Washington, DC 20590	202-426-4000
7.	EPA	Environmental Protection Agency 401 M St., SW Washington, DC 20460	202-829-3535
8.	FS	Federal Specification (General Services Administration) Specifications Unit (WFSIS) 7th and D St., SW Washington, DC 20406	202-472-2205 202-472-2140
9.	GSA	General Services Administration F Street and 18th St., NW Washington, DC 20405	202-655-400
10.	MIL	Military Standardization Documents (US Department of Defense) Naval Publications and Forms Center 5801 Tabor Ave. Philadelphia, PA 19120	
11.	NBS	National Bureau of Standards (US Dept. of Commerce) Gaithersburg, MD 20234	301-921-1000
12.	OSHA	Occupational Safety and Health Administration (US Dept. of Labor) Government Printing Office Washington, DC 20402	202-783-3238
13.	PS	Product Standard of NBS	

(US Dept. of Commerce)
Government Printing Office
Washington, DC 20402 202-783-3238

1.07 GOVERNING REGULATIONS/AUTHORITIES:

The Architect/Engineer has contacted authorities having jurisdiction where necessary to obtain information necessary for the preparation of Contract Documents; that information may or may not be of significance to the Contractor. Contact authorities having jurisdiction directly for information and decisions having a bearing on the Work.

A. Copies of Correspondence: During preparation of the Contract Documents, the Architect/Engineer has maintained a file containing correspondence with authorities having jurisdiction. This file is available at the Architect/Engineer's office for reference. If requested, the Architect/Engineer will provide copies of correspondence at cost of reproduction.

B. Copies of Regulations: Obtain copies of the following regulations and retain at the Project Site, available for reference by parties who have a reasonable need for such reference.

C. Trade Union Jurisdictions: The Contractor shall maintain, and require subcontractors to maintain complete current information on jurisdictional matters, regulations and pending actions, as applicable to construction activities. The manner in which Contract Documents have been organized and subdivided is not intended to indicate of trade union or jurisdictional agreements.
   1. Discuss new developments at Project meetings at the earliest feasible dates. Record relevant information and actions agreed upon.
   2. Assign and subcontract construction activities, and employ tradesmen and laborers, in a manner that will not unduly risk jurisdictional disputes that could result in conflicts, delays, claims and losses.

1.08 SUBMITTALS

A. Permits, Licenses, and Certificates: For the Owner's records, submit copies of permits, licenses, certifications, inspection reports, releases, jurisdictional settlements, notices, receipts for fee payments, judgments, and similar documents, correspondence and records established in conjunction with compliance with standards and regulations bearing upon performance of the Work.

PART 2 - PRODUCTS

Not Applicable

PART 3 - EXECUTION

Not Applicable

END OF SECTION

SECTION 01004
SPECIFICATION OUTLINE

PART 1 - GENERAL

1.01 SUMMARY

A. The purpose of this section is to describe the organization and format to which the Specification has been prepared. This section is intended as an aid to the comprehension of the specification.

1.02 SPECIFICATION FORMAT

A. The Specification has been prepared in accordance with Construction Specifications Institute (CSI) Format

B. The CSI format is subdivided into 16 major divisions. Divisions form the framework of this Specification and contain the technical requirements for the category of work within each division. Divisions that are not applicable to this specification are not used.

C. Sections within each division describe the specific requirements for different units of work based on trade or type of work. Sections within divisions are arranged in numerical order; however, section numbers may be assigned differently in separate divisions. Page numbering is subordinate to section numbering.

D. Sections are sub-divided into three distinct groupings of related information as follows:
   1. Part 1 - GENERAL: Defines the administrative and procedural requirements unique to the section.
   2. Part 2 - PRODUCTS: Details the quality and features of items required for the project.
   3. Part 3 - EXECUTION: Details the incorporation of the products into the project.

   Most sections contain all three sub-divisions; however, they are included only where needed. Paragraph designations are subordinate to sub-divisions.

E. Many sections do not stand alone and are related to other portions of the Subcontract documents. Some sections are specific extensions of, or are governed by the general requirements of Division 1. Requirements of the Subcontract Documents shall apply as a whole, regardless of any overlapping of various portions of the specification.

F. This specification has been written in the imperative mood and, in some cases, in a streamlined form. The imperative language is directed to the Contractor, unless specifically noted otherwise.

1.03 CLARIFICATIONS

A. Most sections begin with a paragraph in Part 1 entitled "Summary" or "Scope of Work". These paragraphs provide a brief description of the work specified in that Section. These descriptions are not intended to be all-inclusive, but provide a brief clarification of the particular subject matter in the specification.

B. Some technical sections contain a paragraph entitled "Related Sections" or "Related Work Specified Elsewhere". This paragraph lists some of the related work specified in other sections

of the Subcontract Documents. These listings are not intended to be all-inclusive. They are presented as a means of aiding the Subcontractor in locating other specification sections containing work that has a close relationship with the work specified in that section. The requirements of the Subcontract Documents, including all specifications, shall apply as a whole.

C. Reference standards are incorporated into the specifications by reference number, title or other designations. The provisions of these standards become a part of the specification as though included in their entirety. When there is a conflict or discrepancy between a reference standard and the specification or with another reference standard, the more stringent requirements shall apply.
D. In the event of a Discrepancy between a drawing and the specification, the specification shall govern.

E. No typographical or other error on drawings shall relieve the Sub-Contractor from his responsibility to perform the intent of this Subcontract.

PART 2 - PRODUCTS

Not Used

PART 3 - EXECUTION

Not Used

END OF SECTION

SECTION 01010
SUMMARY OF WORK

PART 1 - GENERAL

1.01 SUMMARY

A. Project identification:

TEXAS DEPARTMENT OF TRANSPORTATION
AUSTIN DISTRICT, TRAVIS COUNTY
South Travis Area Engineer & Maintenance Facility
26.238 acres out of Santiago Del Valle Grant, Abstract No. 24
Travis County, Austin, Texas

B. Project summary:
1. This project consists of Four buildings and all related site work. Major components of site work consist of site roadways, parking lots, asphalt paving, concrete driveways, concrete curb and gutter, security fencing and gates, concrete walks, drainage structures and connection of building to utility systems.

   Building 1: Office Building. Slab on grade foundation, with a pre-engineered metal building structure with roof purlins, roof insulation board and standing seam metal roof, metal studs and stone veneer exterior wall, forced air DX heating and cooling system.

   Building 2: Maintenance. Connected to Building 1. Slab on grade foundation. Pre-engineered metal building structure with roof purlins, standing seam metal roof and metal wall panels, infrared heating in Shop and Storage areas, compressed air distribution system, and ventilation system.

   Building 3. Laboratory/Storage. Connected to Building 1 with breezeway. Slab on grade foundation. Pre-engineered metal building structure with roof purlins, standing seam metal roof and metal wall panels, forced air DX heating and cooling in Lab and related spaces.

   Building 4. Vehicle Storage. Slab on grade foundation. Pre-engineered metal building structure with roof purlins, standing seam metal roof and metal wall panels.

C. Particular project requirements:
1. Concurrent work by Owner or others: Owner reserves the right to conduct minor work with his own forces or separate contractors during the construction. Work will be coordinated with the contractor.
2. Contractor will have unrestricted access to site.

D. Permits and Fees: Apply for, obtain, and pay for permits, if applicable, fees, and utility company back charges required to perform the work. Submit copies to Owner.

E. Codes: Comply with applicable codes and regulations of authorities having jurisdiction. Submit copies of inspection reports, notices and similar communications to Owner. Primary code is the International Building Code, 2003.

F. Dimensions: Verify dimensions indicated on drawings with field dimensions before fabrication or ordering of materials. Do not scale drawings.

G. Existing Conditions: Notify Owner of existing conditions differing from those indicated on the drawings. Do not remove or alter structural components without prior written approval.

H. Coordination:
   1. Coordinate the work of all trades.
   2. Prepare coordination drawings for areas above ceilings where close tolerances are required between building elements and mechanical and electrical work.
   3. Verify location of utilities and existing conditions prior to beginning work.

I. Installation Requirements, General:
   1. Inspect substrates and report unsatisfactory conditions in writing.
   2. Do not proceed until unsatisfactory conditions have been corrected.
   3. Take field measurements prior to fabrication where practical. Form to required shapes and sizes with true edges, lines and angles. Provide inserts and templates as needed for work of other trades.
   4. Install materials in accordance with manufacturer's instructions and approved submittals.
   5. Install materials in proper relation with adjacent construction and with proper appearance.
   6. Restore units damaged during installation. Replace units which cannot be restored at no additional expense to the Owner.
   7. Refer to additional installation requirements and tolerances specified under individual specification sections.

J. Definitions:
   1. Provide: Furnish and install, complete with all necessary accessories, ready for intended use. Pay for all related costs.
   2. Approved: Acceptance of item submitted for approval. Not a limitation or release for compliance with the Contract Documents or regulatory requirements. Refer to limitations of 'Approved' in General and Supplementary Conditions.

K. Intent: Drawings and specifications are intended to provide the basis for proper completion of the work suitable for the intended use. Anything not expressly set forth but which is reasonable implied or necessary for proper performance of the project shall be included.

L. Writing style: Specifications are written in the imperative mode. Except where specifically intended otherwise, the subject of all imperative statements is the Contractor. For example, 'Provide tile' means 'Contractor shall provide tile.'

PART 2 - PRODUCTS

Not applicable to this section.

PART 3 – EXECUTION

Not applicable to this section.

END OF SECTION

SECTION 01200
PROJECT MEETINGS

PART 1 - GENERAL

RELATED DOCUMENTS
Drawings and general provisions of the Contract, including General and supplementary Conditions and other Division 1 Specification Sections, apply to this Section.

1.02 SUMMARY

A. This section specified administrative and procedural requirements for project meetings including, but not limited to:
   1. Pre-Construction Conference
   2. Pre-Installation Conferences
   3. Coordination Meetings
   4. Progress Meetings

1.03 PRE-CONSTRUCTION CONFERENCE:

A. Schedule a pre-construction conference and organizational meeting at the Project Site or other convenient location not later than 10 days after execution of the Agreement and prior to commencement of construction activities. Conduct the meeting to review responsibilities and personnel assignments.

B. Attendees shall include: The Owner, Architect/Engineer and their consultants, the Contractor and its superintendent, major subcontractors, manufacturers, suppliers and other concerned parties shall each be represented at the conference by persons familiar with and authorized to conclude matters relating to the Work.

C. The Agenda shall: Discuss items of significance that could affect progress including such topics as:
   1. Tentative construction schedule
   2. Critical Work sequencing
   3. Designation of responsible personnel
   4. Procedures for processing field decisions and Change Orders
   5. Procedures for processing Applications for Payment
   6. Distribution of Contract Documents
   7. Submittal of Shop Drawings, Product Data and Samples
   8. Preparation of record documents
   9. Use of the premises
   10. Office, Work and storage areas
   11. Equipment deliveries and priorities
   12. Safety procedures
   13. First Aid
   14. Security
   15. Housekeeping

16. Working hours

1.04 PRE-INSTALLATION CONFERENCES:

A. Conduct a pre-installation conference at the site before each construction activity that requires coordination with other construction. The Installer and representatives of manufacturers and fabricators involved in or affected by the installation, and its coordination or integration with other materials and installations that have preceded or will follow, shall attend the meeting. Advise the Architect of scheduled meeting dates.

B. Review the progress of other construction activities and preparations for the particular activity under consideration at each pre-installation conference, including requirements for:
   1. Contract documents
   2. Options
   3. Related Change Orders
   4. Purchases
   5. Deliveries
   6. Shop Drawings, Product Data and Quality Control Samples
   7. Possible Conflicts
   8. Compatibility Problems
   9. Time Schedules
   10. Weather Limitations
   11. Manufacturer's Recommendations
   12. Compatibility of Materials
   13. Acceptability of Substrates
   14. Temporary Facilities
   15. Space and Access Limitations
   16. Governing Regulations
   17. Safety
   18. Inspection and Testing Requirements
   19. Recording Requirements
   20. Protection

C. Record significant discussions and agreements and disagreements of each conference, along with the approved schedule. Distribute the record of the meeting to everyone concerned, promptly, including the Owner and Architect/Engineer. Do not proceed if the conference cannot be successfully concluded. Initiate whatever actions are necessary to resolve impediments to performance of Work and reconvene the conference at the earliest feasible date.

1.05 COORDINATION MEETINGS:

A. Conduct project coordination meetings at regularly scheduled times convenient for all parties involved. Project Coordination meetings are in addition to specific meetings held for other purposes, such as regular progress meetings and specific pre-installation conferences.

B. Request representation at each meeting by every party currently involved in coordination or planning for the construction activities involved.

C. Record meeting decisions or action and distribute copies to everyone in attendance and to others affected by those decisions or actions resulting from each meeting.

1.06 PROGRESS MEETINGS:

A. Conduct progress meeting weekly at the Project site at regularly scheduled times convenient for all parties involved. Notify the Owner and Architect/Engineer of schedule meeting dates. Coordinate dates of meetings with preparation of payment request.

B. Attendees shall include, in addition to representative of the Owner and Architect/Engineer, each sub-contractor, suppliers or other entity concerned with current progress or involved in planning, coordination or performance of future activities shall be represented at these meetings by persons familiar with the Project and authorized to conclude matters relating to progress.

C. Agenda: Review and correct or approve minutes of the previous progress meeting. Review other items of significance that could affect progress. Include topics for discussion as appropriate to the current status of the Project.

1. Contractor's Construction Schedule: Review progress since the last meeting. Determine where each activity is in relation to the Contractor's Construction Schedule, whether on time or behind schedule. Determine how construction behind schedule will be expedited; secure commitments from involved parties to do so. Discuss whether schedule revisions are required to ensure that current and subsequent activities will be completed within the Contract Time. Review the present and future needs of each entity present, including such items as:
   a) Interface Requirements
   b) Time
   c) Sequences
   d) Deliveries
   e) Off-Site Fabrication Problems
   f) Access
   g) Site Utilization
   h) Temporary Facilities and Services
   i) Hours of Work
   j) Hazards and Risks
   k) Housekeeping
   l) Quality and Work Standards
   m) Change Orders
   n) Documentation of Information for Payment Requests

D. Reporting: No later than 3 days after each progress meeting date, distribute copies of minutes of the meeting to each party present and to other parties who should have been present. Include a brief summary, in narrative form, of progress since the previous meeting and report.

E. Schedule Updating: Revise the construction schedule after each progress meeting where revisions to the schedule have been made or recognized. Issue the revised schedule concurrently with the report of each meeting.

PART 2 - PRODUCTS

Not Applicable

PART 3 - EXECUTION

Not Applicable

END OF SECTION

SECTION 01300
ADMINISTRATIVE REQUIREMENTS

PART 1 – GENERAL

1.01 SUMMARY

A. Provide coordination of work.
   1. Provide project superintendent and other supervisory personnel required for proper performance of the work.
   2. Participate in a pre-construction conference at a time and place determined by the Architect for the purpose of identifying responsibilities of the Owner's and Architect's personnel and explanation of administrative procedures.
   3. Schedule and conduct monthly meetings, distribute minutes.
   4. Schedule and conduct other meetings as necessary, distribute minutes.

B. Submit bar chart progress schedule, updated monthly.

C. Prepare submittal schedule coordinated with progress schedule.

D. Submit schedule of values, divided so as to facilitate payments to subcontractors, on forms provided by the Owner. Schedule, when approved, will be used as the basis for the Contractor's Application for payment. Itemize separate line item cost for Performance and Payment Bonds, and Field supervision and layout.

E. Submit schedule of required tests including payment and responsibility.

F. Perform all field engineering, layout, and surveying required for layout of project.

G. Submit and post a list of emergency telephone numbers and addresses for individuals to be contacted in case of emergency.

H. Record drawings and specifications to be maintained and annotated by contractor as work progresses to record actual construction, and be turned over to the Architect at substantial completion. See Section 01700 for detailed requirements.

I. Submit payment request procedures.

J. Perform quality control during installation.

K. Clean and protect the work.

PART 2 – PRODUCTS

Not applicable to this section

PART 3 – EXECTUTION

Not applicable to this section

END OF SECTION

SECTION 01310
CONSTRUCTION SCHEDULES

PART 1 - GENERAL

1.01 GENERAL:
Provide projected construction schedules for entire Work, revise as required by the Owner's representative, Project Manager, or Architect.

1.02 RELATED WORK SPECIFIED ELSEWHERE:

A. Section 01340 - Shop Drawings, Product Data and Samples

B. Section 01370 - Schedule of Values

1.03 FORM OF SCHEDULES:

A. Bar Chart or other approved form.

B. Order: Chronological order of beginning of each item of work.

C. Marking Identify each item referenced by major specification section number.

1.04 CONTENT OF SCHEDULES:

A. Provide complete sequence of construction activity.
   1. Shop Drawings, Product Data and Samples:
      a) Submittal dates.
      b) Dates reviewed copies will be required.
   2. Decision dates for:
      a) Products specified by allowances.
      b) Selection of finishes.
   3. Product procurement and delivery dates.
   4. Dates for beginning and completion of each element of construction.

B. Identify work for separate phases or other logically grouped activities.

C. Show projected percentage of completion for each item of work as of first day of each month.

D. Provide separate sub-contractor, schedule showing submittals, review times, procurement schedules and delivery dates as required.

E. Provide sub schedules to define critical portions of entire schedule as required.

F. Include calendar days from date of start of project to date of completion.

1.05 UPDATING:

A. Indicate changes occurring since previous submission of updated schedule.

B. Indicate progress of each activity, including completion dates.

C. Include:
   1. Major changes in scope.
   2. Activities modified since previous updating.
   3. Revised projections due to changes.
   4. Other identifiable changes.

1.06 SUBMITTALS

A. Submit initial schedules within 15 days after date of Notice to Proceed.
   1. Architect will review schedules and return review copy within 10 days after receipt.
   2. If required, re-submit within 7 days after return of review copy.

B. Submit periodically updated schedules accurately depicting progress to the first day of each month.

C. Submit number of copies required by Contractor, plus two copies to be retained by Architect.

END OF SECTION

SECTION 01330
SUBMITTAL PROCEDURES

PART 1 – GENERAL

1.01 SUMMARY

A. Provide types of submittals listed in individual sections and number of copies required.
   1. Shop drawings reviewed and annotated by the contractor and bearing Contractor's stamp certifying that they have been checked. Delays caused by failure of Contractor to check shop drawings shall be the Contractor's responsibility – four copies.
   2. Product data - four copies.
   3. Samples - two plus extra samples as required to indicate range of color, finish, and texture .
   4. Inspection and test reports - four copies.
   5. Project Warranty and Maintenance Manual: Prior to final payment, the Contractor shall furnish two complete sets, in tabbed standard size ring binders, of equipment data, maintenance information, operations instructions, and warranties for equipment and systems provided under this contract. See Section 01700 for detailed requirements.

B. Prior to submitting shop drawings, Contractor shall furnish Architect with complete Shop Drawing Submittal Log. Contractor shall submit all required shop drawings and product data to the Architect with reasonable promptness and in an orderly sequence so as to cause no delay in the work. No extension of time shall be allowed because of failure to properly coordinate and sequence submittals. The Architect will review properly sequenced submissions within 15 calendar days after receipt. Architect will act upon any re-submission within 10 calendar days. Contractor's responsibility for deviations or errors and omissions in submittals is not relieved by Architect/Engineer review. All work must ultimately comply with the contract documents unless Architect/Engineer gives specific written acceptance of specific deviations.

C. The Architect shall have the right to require submission of samples of and materials, whether or not specifically indicated in the various Sections of the Specifications.

D. Provide required re-submittals if original submittals are not approved. Provide distribution of approved copies including modifications after submittals have been approved.

E. Samples and shop drawings shall be prepared specifically for this project. Shop drawings shall include dimensions and details, including adjacent construction and related work. Note special coordination required. Note any deviations from requirements of the contract documents.

F. Provide warranties as specified. Warranties shall not limit length of time for remedy of damages owner may have by legal statute. Contractor, supplier, or installer responsible for performance of warranty shall sign warranties.

PART 2 – PRODUCTS

Not applicable to this section.

PART 3 – EXECUTION

Not applicable to this section.

END OF SECTION

SECTION 01340
SHOP DRAWINGS, PRODUCTION DATA, AND SAMPLES

PART 1 - GENERAL

1.01 GENERAL:

A. Refer to General Conditions, Article 3.12.

B. Submit to the Architect shop drawings, product data and samples required by Specification sections.

C. Prepare and submit, with construction schedule, a separate schedule listing dates for submission and lead dates for reviewed shop drawings, product data and samples for each item.

1.02 SHOP DRAWINGS:

A. Original drawings, prepared by Contractor, Sub-contractor, Supplier or Distributor, which illustrate some portion of the work, showing fabrication, layout, setting or erection details, prepared by a qualified detailer.

B. Reproductions for submittals: one reproducible transparency with 3 opaque prints.

1.03 PRODUCT DATA:

A. Manufacturer's standard schematic drawings.
   1. Modify drawings to delete information which is not applicable to Project.
   2. Supplement standard information to provide additional information applicable to Project.

B. Manufacturer's catalog sheets

1.04 SAMPLES:

Physical examples to illustrate materials, equipment and workmanship, and to establish standards by which completed work is judged.

1.05.1CONTRACTOR RESPONSIBILITIES:

A. Review shop drawings, product data and samples prior to submission. Initial, sign or stamp certifying to review of submittal.

B. Verify:
   1. Field measurements.
   2. Field construction criteria.
   3. Catalog numbers and similar data.

C. Coordinate each submittal with requirements of work of Contract Documents.

D. Contractor's responsibility for errors and omissions in submittals is not relieved by Architect's review of submittals.

E. Contractor's responsibility for deviations in submittals from requirements of Contract Documents is not relieved by Architect's review of submittals, unless architect gives written acceptance of specific deviations.

F. Notify Architect, in writing at time of submission, of deviations in submittals from requirements of Contract Documents.

G. Begin no work which requires submittals until return of submittals with Architect's stamp and initials or signature indicating review.

H. After Architect's review, distribute copies.

1.06 SUBMISSIONS REQUIREMENTS:

A. Schedule submissions at least 30 days before date reviewed submittals will be needed, in accordance with approved submittal schedule.

B. Submit 3 opaque prints of shop drawings and number of copies of product data which Contractor requires for distribution, plus 3 copies which will be retained by Architect.

C. Submit number of samples specified in each of Specification sections.

D. Accompany submittals with transmittal letter in duplicate containing:
   1. Date.
   2. Project title and number.
   3. Contractor's name and address.
   4. The number of each shop drawing, product data and sample submitted.
   5. Notification of deviations from Contract Documents.
   6. Other pertinent data.

1.07 RE-SUBMISSION REQUIREMENTS:

A. Shop Drawings:
   1. Revise initial drawings as required and resubmit as specified for initial submittal.
   2. Indicate on drawings any changes which have been made, other than those requested by Architect.

B. Product Data and Samples:
   1. Submit new data and samples as required for initial submittal.

1.08 DISTRIBUTION OF SUBMITTALS AFTER REVIEW:

A. Distribute copies of shop drawings and product data which carry Architect's stamp as required for construction, including Contractor's file, job site file, other prime Contractors, Sub-contractors, Supplier and Fabricator.

END OF SECTION

SECTION 01400
QUALITY CONTROL PROCEDURES

PART 1 - GENERAL

1.01 SECTION INCLUDES:

A. Quality Assurance/Control of Installation

B. Inspection and Test Laboratory Services

C. Manufacturer's Field Services and Reports

1.02 RELATED SECTIONS

A. Section 01300 - Submittals: Submission of Manufacturer's Instructions and Certificates.

B. Section 01600 - Material and Equipment.

1.03 QUALITY ASSURANCE/CONTROL OF INSTALLATION

A. Monitor quality control over suppliers, manufacturers, products, services, site conditions, and workmanship to produce work of specified quality.

B. Comply fully with manufacturers' instructions, including each step in sequence and secure manufacturer's certification as certified installer, when applicable.

C. Should manufacturers' instructions conflict with Contract Documents, request clarification from Owner and Architect/Engineer before proceeding.

D. Comply with specified standards as a minimum quality for the work except when more stringent tolerances, codes, or specified requirements indicate higher standards or more precise workmanship.

E. Perform work by persons qualified to produce workmanship of specified quality. The Contractor shall comply with any applicable local, state, and federal codes and regulations.

F. Secure products in place with positive anchorage devices designed and sized to withstand stresses, vibration, physical distortion or disfigurement.

1.04 INSPECTION AND TESTING LABORATORY SERVICES

A. The work will be observed by the Architect/Engineer (i.e., the Owner's Representative) and performed to his satisfaction in accordance with the Contract Plans and Specifications. The Owner's representative and Architect/Engineer will decide all questions which may arise as to the quality of acceptability of materials furnished and work performed; the manner of

performance and rate of progress of the work; the interpretations of the contract plans and specifications; and the acceptable fulfillment of the contract on the part of the Contractor. The Owner's decisions will be final, and he will have executive authority to enforce and make effective such decisions and orders if the contractor fails to carry out the work promptly.

B. Any materials and/or workmanship which are rejected by the Engineer by reason of failure to conform to the requirements of the plans or specifications shall be removed and replaced at Contractor's expense, including testing expense to correct faulty work.

C. Inspections and testing required by law, ordinances, rules and regulations or other public authorities are the responsibility of the Contractor. It is the sole responsibility of the Contractor to call for testing and any work not tested will be automatically rejected

D. Contained in the various specification sections are requirements for certification of products, testing, adjusting, and balancing of equipment and other tests and stardards. Testing is required for, but not limited to, the following items of work:
   1. Soils-compaction control and hydrocarbon concentrations
   2. Portland cement concrete pavement
   3. Cast-in-place concrete
   4. Concrete reinforcement
   5. Asphalt pavement
   6. Cement-Sand Backfill material
   7. Crushed limestone base materials
   8. Water and sludge
   9. Other items in the Scope of Work

1.05 TESTING LABORATORY DUTIES

A. Cooperate with the Architect/Engineer and Contractor; provide qualified personnel promptly on notice.

B. Perform specified inspections, sampling and testing of materials and methods of construction.
   1. Comply with specified standards; ASTM, EPA, TNRCC, other recognized authorities, and as specified.
   2. Ascertain compliance with requirements of the Contract Documents.

C. Promptly notify the Architect/Engineer and Contractor of irregularities or deficiencies in work, which are observed during performance of services.

D. Prepare and distribute reports of inspections and tests within two (2) TxDOT working days of test completion or weekly on continuous work as follows:
   1. TxDOT Project Manager: Two (2) copies
   2. Contractor: One (1) copy
   3. Architect: One (1) copy

E. Include the following information for each test as well as additional data specified in the applicable section:

1. Date of test
2. Location of test/sample
3. Specified standards
4. Test results
5. Remarks
6. QA/QC procedures

F. The laboratory shall not:
1. Release, revoke, alter, or enlarge on requirements of the Contract Documents.
2. Approve or accept any portion of the work.
3. Perform any duties of the Contractor.

1.06 CONTRACTOR'S RESPONSIBILITIES

A. Cooperate with laboratory personnel; provide access to the work area.

B. Provide to laboratory, preliminary representative samples of materials to be tested in required quantities.

C. Furnish labor and equipment:
1. To provide access to the work to be tested.
2. To obtain and handle samples at the site.
3. To facilitate inspections and tests.
4. For laboratory's exclusive use for storage and curing of test samples.

1.07 MANUFACTURER'S FIELD SERVICES AND REPORTS

A. When specified in individual Specification Sections, the Contractor shall provide names of material or product suppliers or manufacturers, qualified staff personnel to observe site conditions, conditions of surfaces and installation, quality of workmanship, start-up of equipment, test, adjust, and balance of equipment as applicable, and to initiate instructions when necessary.

B. The Contractor shall provide to the Owner the names of individuals and manufacturer's representative report of observations and site decisions or instructions given to applicators or installers that are supplemental or contrary to manufacturer's written instructions.

C. Submit report in duplicate within 5 days of observation to Owner's Representative and Architect/Engineer for review.

PART 2 - PRODUCTS

Not Used

PART 3 - EXECUTION

Not Used

END OF SECTION

SECTION 01410
TESTING LABORATORY SERVICES

PART 1 – GENERAL

1.01 RELATED DOCUMENTS:
Provision established within the General and Supplementary General Conditions of the Contract, Division 1 – General Requirements, and the Drawings are collectively applicable to this Section.

1.02 WORK INCLUDED:

A. The testing laboratory shall make all inspections and perform all tests in accordance with the building code, local authorities, state regulations, **TxDOT Test Standards**, and the ASTM specifications and the Contract Documents.

B. Materials and workmanship not meeting the required standards are to be removed and replaced. Replacement and subsequent testing shall be at the expense of the Contractor.

C. Testing, inspection and certifications specified in other sections of these Specifications shall be paid by the Owner.

D. Inspection by the laboratory shall not relieve the Contractor or Fabricator of his responsibility to furnish materials and workmanship in accordance with the Contract Documents.

1.03 SELECTION AND PAYMENT:

A. Owner shall employ and pay for services of an independent testing laboratory, to perform inspection and testing services specified in this section. The selected independent testing laboratory shall furnish unit or hourly costs for performing work as described in this section. The Owner reserves the right to determine which tests and the quantity of each herein described or elected.

1.04 REFERENCED STANDARDS:

A. The latest adopted edition of all standards referenced in the Section shall apply, unless noted otherwise. In case of conflict between these Contract Documents and a referenced standard, the Contract Documents shall govern. In case of conflict between these Contract Documents and the Building Code, the more stringent shall govern.

1.05 QUALITY ASSURANCE:

A. Testing Laboratory shall meet the requirements of ASTM E329 and ASTM E543.

B. Testing Laboratory shall be insured against errors and omissions by a professional liability insurance policy having a limit of liability not less than $500,000.

C. Testing Laboratory shall be under the direction of a Registered Engineer licensed in the State of Texas, having at least five years experience in inspection and testing of construction materials.

D. Laboratory staff monitoring concrete work shall be ACI certified inspectors.

E. Laboratory staff performing structural steel inspection shall be currently certified AWS Certified Welding Inspectors (CWI), in accordance with the provisions of AWS QCI, "Standard and Guide for Qualification and Certification of Welding Inspectors". The inspector may be supported by assistant inspectors who may perform specific inspection functions under the supervision of the inspector. Assistant inspectors shall be currently certified AWS Certified Associate Welding Inspectors (CAWI). The work of the assistant inspectors shall be regularly monitored by the inspector, generally on a daily basis.

F. Testing Equipment: Calibrated at reasonable intervals with devices of accuracy traceable to either National Bureau of Standards or accepted values of natural physical constants.

1.06 LABORATORY RESPONSIBILITIES:

A. Attend pre-construction meetings and progress meetings when requested, to coordinate work with the Contractor and address quality control issues.

B. Test samples of design mixes submitted by Contractor.

C. Provide qualified personnel at site. Cooperate with Architect/Engineer and Contractor in performance of services.

D. Perform specified inspecting, sampling, and testing of Products in accordance with specified standards.

E. Ascertain compliance of materials and mixes with requirements of Contract Documents.

F. Promptly notify Architect/Engineer and Contractor of observed irregularities or non-conformance of Work or Materials.

G. Perform all inspections and tests in accordance with building code requirements for "Special Inspection" whether or not such inspections are specified in the Contract Documents.

1.07 LABORATORY REPORTS:

A. After each inspection and test, promptly submit copies of laboratory reports to Architect, Engineer, Owner and to Contractor.

B. Include:
   1. Date issued
   2. Project title and number
   3. Name of inspector
   4. Date and time of sampling or inspection
   5. Identification of product and specifications section
   6. Location in the Project
   7. Type of inspection or test
   8. Date of test
   9. Results of tests
   10. Conformance with Contract Documents

1.08 LIMITS ON TESTING LABORATORY AUTHORITY:

A. Laboratory may not release, revoke, alter, or enlarge the requirements of the Contract Documents.

B. Laboratory may not approve or accept any portion of the Work, except where such approval is specifically called for in these specifications.

C. Laboratory may not assume any duties of Contractor.

D. Laboratory has no authority to stop the Work.

1.09 CONTRACTOR RESPONSIBILITIES:

A. See technical sections of these specifications for specific requirements.

B. Advise laboratory sufficiently in advance of construction operations to allow laboratory to complete any required checks or tests and to assign personnel for field inspection and testing as specified.

C. Provide facilities for safe storage and proper curing of concrete test samples on project site for the first 24 hours and also for subsequent field curing as required by ASTM specifications C31.

D. Provide incidental labor and equipment as required to assist laboratory personnel in obtaining and handling samples at the site and in accessing work for inspection.

E. Furnish concrete mix designs, in accordance with ACI 301, Section 3.9, made by an independent testing laboratory or qualified concrete supplier. Where mix designs are required, the laboratory shall be selected and paid by the Contractor.

F. Provide current welder certifications for each welder to be employed.

G. Furnish fabrication and erection inspection of all welds in accordance with the AWS D1.1, Chapter 6.

H. Pre-qualification of all welding procedures to be used in executing the work.

PART 2 – PRODUCTS

NOT APPLICABLE

PART 3 – EXECUTION

3.01 PIER DRILLING:

A. The laboratory representative shall make continuous inspections to determine that the proper bearing stratum is obtained and that shafts are clean and dry before placing concrete.

B. The laboratory shall furnish complete pier log showing the diameter, top and bottom elevations of each pier, whether or not casing is required, bell size, actual penetration into bearing stratum, and elevation of top of bearing stratum.

C. Owner may perform this function with his personnel.

3.02 FILLING AND BACKFILLING:

A. The Contractor shall make available to the laboratory, adequate samples of each fill and backfill material from the proposed sources of supply not less than 10 days prior to the start of the work.

B. Laboratory shall analyze samples as required to provide a soil description and to determine compliance with quality requirements. Perform the following tests:
   1. Test for liquid limit in accordance with ASTM D423.
   2. Test for plastic limit of soils and plasticity index of soils in accordance with ASTM D424.
   3. Tests for moisture density relations of soil in accordance with ASTM D698 or D1557, as applicable.

C. Furnish a report for each individual test and state whether sample conforms to specified requirements or reasons for nonconformance.

D. Inspect under slab drainage material and placement for compliance with specified gradation, quality and compaction.

E. Make in-place compaction test for moisture content, moisture-density relationship, and density of fill material after compaction to determine that backfill materials have been compacted to the specified density. Number of tests shall be as follows:
   1. One test for each 5,000 square feet of area of each lift placed under floor slab. Stagger test locations in each lift from those in the previous lift. Perform a minimum of three tests for each lift.
   2. One test for each 100 linear feet, or portion thereof, of each lift placed against foundation walls, with locations staggered from those in the previous lift.
   3. One test of each lift placed below any isolated footing, and every 100 linear feet under continuous footings, with locations taken on a different side from that in the lift below.

3.03 CONCRETE REINFORCING STEEL AND EMBEDDED METAL ASSEMBLIES:

A. Inspect all concrete reinforcing steel prior to placing of concrete for compliance with the Contract Documents and approved shop drawings. All instances of noncompliance shall be immediately brought to the attention of the Contractor for correction. If uncorrected by the Contractor, they shall be listed in the report.

B. Observe and report on the following:
   1. Number and size of bars.
   2. Bending and lengths of bars.
   3. Splicing.
   4. Clearance to forms including chair heights.
   5. Clearance between bars or spacing.
   6. Rust, form oil, and other contaminations.

7. Grade of Steel.
8. Securing, tying and chairing of bars.
9. Excessive congestion of reinforcing steel.
10. Installation of anchor bolts and placement of concrete around anchor bolts.
11. Fabrication and installation of embedded metal assemblies, including visual inspection of all welds.
12. Visually inspect studs and deformed bar anchors on embedded assemblies for compliance with Contract Documents.

C. Provide a qualified, experienced inspector to inspect reinforcing steel. Inspector shall have a minimum of three years experience inspecting reinforcing steel in project of similar size.

3.04 CONCRETE INSPECTION AND TESTING:

A. Secure composite samples of concrete at the jobsite in accordance with ASTM C172.

B. Mold and cure three specimens from each sample in accordance with ASTM C31. The test cylinders shall be stored in the field 24 hours and then carefully transported to the laboratory and cured in accordance with ASTM C31.

C. Test specimens in accordance with ASTM C39. Two specimens shall be tested at 28 days for acceptance and one shall be tested at 7 days for information.

D. Make one strength test (three cylinders or beams) for each 100 cubic yards or fraction thereof, of each mix design placed in one day.

E. Make one slump test for each set of cylinders following the procedural requirements of ASTM C143 and ASTM C172. Make additional slump tests whenever the consistency of the concrete appears to vary. Do not permit placement of concrete having measured slump outside the limits given on the drawings, except when approved by the Architect. Slump tests corresponding to samples from which strength tests are made shall be reported with the strength test results. Other slump tests need not be reported.

F. Determine total air content of air entrained normal-weight concrete sample for each strength test in accordance with ASTM C231.

G. Determine temperature of concrete sample for each strength test.

H. Monitor the addition of water at the jobsite and the length of time the concrete is allowed to remain in the truck before placement. Report any significant deviation from the approved mix design to the Architect, the Contractor, and the concrete supplier.

I. Observe the placing of all concrete, except non structural slabs-on-grade and site work. Observe and report on placing method, consolidation, cold joints, length of drop and displacement of reinforcing. Report deficiencies to the Contractor immediately for corrective action. Inspections may be reduced to a periodic basis when all procedures have been deemed satisfactory by the laboratory.

J. The testing laboratory shall certify each delivery ticket indicating class of concrete delivered (or placed), amount of water added and the time at which the cement and aggregate was dispensed into the truck, and the time at which concrete was discharged from the truck.

K. Evaluation and Acceptance:
   1. If the measured slump or air content of air entrained concrete falls outside the specified limits, a check test shall be made immediately on another portion of the same sample. In the event of a second failure, the concrete shall be considered to have failed to meet the requirements of the specifications and shall be rejected.
   2. The strength level of the concrete will be considered satisfactory if the averages of all sets of three consecutive strength test results are equal to or exceed the specified strength and no individual test result (average of two cylinders) is below the specified strength by more than 500 psi.
   3. Completed concrete work will be accepted when the requirements of "Specifications for Structural Concrete for Building," ACI 301, Chapter 18 have been met.

L. Comply with ACI 311, "Guide For Concrete Inspection" and "ACI Manual of Concrete Inspection" (SP-2).

M. Inspect the application of curing compound and monitor all curing conditions to assure compliance with Specification requirements. Report curing deficiencies to the Contractor immediately and submit a report to the Architect.

3.05 MASONRY:

A. Inspection
   1. Provide a qualified inspector to inspect all structural masonry work on a periodic basis. Inspect the work in progress at least once for each 5,000 square feet of wall laid, but not less than once each day, to check compliance with the Contract Documents and the applicable building code.
   2. Inspect the following:
      a. Placement of reinforcing.
      b. Cavities to be grouted (prior to grouting and prior to closing cleanouts, if any.)
      c. Mortar mixing operations.
      d. Bedding of mortar for each type of unit and placing of units.
      e. Grouting operations.
      f. Condition of units before laying for excessive absorption.
   3. Provide report of each inspection.

B. Compressive Test for Mortar
   1. Secure composite samples of mortar at the jobsite in accordance with ASTM C780.
   2. Mold and cure three cube specimens in accordance with ASTM C109 and C780. Supervise the curing and protection provided by the contractor for test specimens in the field and the transportation from the field to the laboratory. The specimens shall be stored in the field 24 hours and then be moved to the laboratory and cured in accordance with ASTM C780.
   3. Test specimens in accordance with ASTM C780. Two specimens shall be tested at 28 days for acceptance and one shall be tested at 7 days for information.
   4. Make one strength test (three cubes) for each 5,000 square feet of wall area.

C. Compressive Test for Grout
   1. Secure composite samples of grout at the jobsite in accordance with ASTM C172.
   2. Mold and cure three, 3" diameter by 6" tall cylinders from each sample in accordance with ASTM C31. Supervise the curing protection provided by the contractor for the test specimens in the field and transportation to the laboratory. The test cylinders shall be

stored in the field 24 hours and then moved to the laboratory and cured in accordance with ASTM C31.

3. Test specimens in accordance with ASTM C39. Two specimens shall be tested at 28 days for acceptance and one shall be tested at 7 days for information.
4. Make one strength test (three cylinders) for each 10 cubic yards to grout poured but not less than one strength test for each 5,000 feet of wall area.

3.06 STRUCTURAL STEEL:

A. Inspect all structural steel during fabrication and during the after erection for conformance with Contract Documents and shop drawings, as requested by the Owner.

B. Shop Inspection:
   1. Examination of steel for straightness and alignment.
   2. Examination of all fabricated pieces for compliance with Contract Documents and shop drawings.
   3. Visual examination of all shop welding.
   4. Ultrasonic testing of all full penetration welds.
   5. Examination of galvanizing.
   6. Examination of installation of shop welded shear studs.
   7. Examination of shop painting.

C. Field Inspection:
   1. Proper erection of all pieces.]
   2. Proper installation of all bolts, including the checking of calibration of impact wrenches used with high strength bolts.
   3. Plumbness of structure and proper bracing.
   4. Field Painting.
   5. Visual examination of all field welding.
   6. Ultrasonic testing of all penetration welds.
   7. Installation of field welded shear studs.

D. Qualification of Welders: Fabricator and erector shall provide the testing laboratory with names of welders to be employed in the work, together with certification that welders have passed qualification tests within the last year using procedures specified in the AWS D1.1. The Owner shall verify all welders' qualifications.

E. Inspection of shop and field welding shall be "verification inspection", in accordance with Section 6 of AWS D1.1 on an "as needed" basis, and as follows:
   1. Visually inspect the welding of all shop fabricated members and note the location of all cover plates, connectors, bearing stiffeners, splices, and fillet welds for proper return around ends and check for seams, folds, and delaminations.
   2. Ultrasonically test all penetration welds in accordance with ASTM E164.
   3. Inspect surfaces to be welded. Surface preparations, fit-up and cleanliness of surface shall be noted.
   4. The welding inspector shall be present during alignment and fit-up of members being welded, and shall check for correct surface preparation of root openings, sound weld metal and proper penetration in the root pass. Where weld has not penetrated completely, the inspector shall order the joint to be chipped down to sound metal, or gouged out and rewelded. Root passes shall be thoroughly inspected for cracks. All cracks shall be gouged out and rewelded to two inches beyond each end of crack.

5. The inspector shall check that all welds have been marked with the welders' symbol. The inspector shall make the welds requiring repairs and shall make a reinspection. The inspector shall maintain a written record of all welds. Work completed and inspected shall receive an identification mark by the inspector.
6. The testing laboratory shall advise the Owner and the Architect of any shop and/or field conditions which, in his opinion, may require further tests and examination by means other than those specified. Such further tests and examinations shall be performed as authorized by the Owner and the Architect.
7. The Owner reserves the right to use ultrasonic or radiographic inspection to verify the adequacy of all welds. Testing procedures and acceptance criteria shall be as specified in AWS D1.1.

F. Inspection of bolted construction shall be in accordance with AISC "Specification for Structural Steel Buildings" and as follows:
   1. All bolts shall be visually inspected to endure that the plies have been brought into snug contact.
   2. High strength bolting shall be inspected in accordance with Section 9 of the AISC "Specifications for Structural Joints Using ASTM A325 or A490 Bolts."
   3. For all high strength bolts, unless specifically noted on the Drawings to require only "snug-tight" installation, the inspector shall observe the required jobsite testing and calibration, and shall confirm that the procedure to be used provides the required tension.

3.07 METAL ROOF DECK:

A. Field inspection shall consist of the following:
   1. Checking types, gauges, and finishes for conformance with the Contract Documents and shop drawings.
   2. Examination for proper erection of all metal deck, including fastenings at supports and sidelaps, reinforcing of holes, and miscellaneous deck supports.
   3. Certification of all welders.
   4. Visual inspection of at least 25% of all welds.

END OF SECTION

SECTION 01500
CONSTRUCTION AND TEMPORARY CONTROLS

PART 1 - GENERAL

1.01 SECTION INCLUDES:

A. Temporary Electricity

B. Temporary Lighting

C. Telephone Service

D. Temporary Water Service

E. Temporary Sanitary Facilities

F. Barriers

G. Water Control

H. Protection of Installed Work

I. Security

J. Parking

K. Progress Cleaning

L. Field Offices and Sheds

M. Removal of Utilities, Facilities, and Controls

1.02 TEMPORARY ELECTRICITY.

A. Contractor shall be responsible for connecting to power service. Provide and install temporary overhead power from Utility Company. Set temporary meter and switchgear at start of construction. Specified switchgear shall not be used to construct building until building is in "dry-in" stage.

B. Contractor shall provide flexible power cords, as required.

C. Permanent convenience receptacles may be utilized during construction when approved by Owner.

D. Provide adequate distribution equipment, wiring, and outlets to provide single-phase branch circuits for power and lighting.

E. Contractor will pay cost of energy used. Contractor shall exercise measures to conserve energy.

1.03 TEMPORARY LIGHTING

A. Contractor shall provide branch wiring from power source to distribution boxes with lighting conductors, pigtails, and lamps, as required.

B. It is the responsibility of the Contractor to maintain lighting and provide routine repairs.

C. Permanent building lighting may be utilized during construction.

1.04 TELEPHONE SERVICE

A. Contractor shall provide, maintain, and pay for telephone service for field operations at time of project mobilization. No calls shall be made using Owner's equipment. In the event of a telephone charge to a TxDOT telephone, the Contractor shall be responsible for reimbursing the Owner for long distance charges. Reimbursement shall be made prior to the Owner releasing monies on payment draws.

1.05 TEMPORARY WATER SERVICE

A. Connect to existing water source for construction operations.

B. Extend branch piping with outlets located so water is available by hoses with threaded connections.

C. Contractor will pay cost of water used. Exercise measures to conserve water.

1.06 TEMPORARY SANITARY FACILITIES

A. The Contractor shall provide and maintain required facilities and enclosures. Existing on-site facilities shall not be used.

1.07 BARRIERS

A. Provide barriers to prevent unauthorized entry to construction areas, to allow for Owner's use of site, and to protect existing facilities and adjacent properties from damage from construction operations.

B. Provide protection for plant life designated to remain. Replace damaged plant life.

C. Protect non-owned vehicular traffic, stored materials, site, and structures from damage.

1.08 WATER CONTROL

A. Grade site to drain. All areas of excavation (including new pipe chases, tank pit(s), etc.) shall be bermed to protect excavation(s) from runoff of any kind. Maintain excavations free of water. Provide, operate, and maintain pumping equipment. Disposal of ground water encountered during excavation shall be at Contractor's expense. In the event the Contractor fails to berm excavations, the Contractor shall be responsible for cleanup and disposal of any soils and/or water contaminated by the failure to berm.

B. Protect site from puddling or running water. Provide water barriers as required to protect site from soil erosion.

1.08 PROTECTION OF INSTALLED WORK

A. Protect installed work and provide special protection where specified in individual specification Sections.

B. Provide temporary and removable protection for installed Products. Control activity in immediate work area to minimize damage.

C. Provide protective coverings at walls, projections, jambs, sills, and soffit of openings.

D. Protect finished floors, stairs, and other surfaces from dirt, traffic, wear, damage, or movement of heavy objects, by protecting with durable sheet materials.

E. Prohibit traffic or storage upon waterproofed or roofed surfaces. If traffic or activity is necessary, obtain recommendations for protection from waterproofing or roofing material manufacturer.

F. Prohibit traffic from landscaped areas.

1.09 SECURITY

A. The Contractor shall coordinate with Owner's security programs.

1.10 PARKING

A. The Owner will provide parking at the site for ten (10) Contractor or Contractor employee vehicles.

B. When site space is not adequate, the Contractor shall provide additional off-site parking as needed.

1.11 PROGRESS CLEANING

A. Maintain areas free of waste materials, debris, and rubbish. Maintain site in a clean and orderly condition.

B. Remove waste materials, debris, and rubbish from site weekly or sooner upon owner representative's request, and dispose off-site.

1.12 FIELD OFFICES AND SHEDS

A. Contractor shall furnish field offices, if required, for execution of the Work. No use of Owners facilities or equipment will be permitted. In the event the Contractor furnishes a field office, the office shall be located as directed by the Owner.

1.13 REMOVAL OF UTILITIES, FACILITIES, AND CONTROLS

A. Remove temporary above grade or buried utilities, equipment, facilities, materials prior to Final Application for Payment.

B. Clean and repair damage caused by installation or use of temporary work.

C. Restore existing facilities used during construction to original condition. Restore permanent facilities used during construction to specified condition.

PART 2 – PRODUCTS

Not Used

PART 3 – EXECUTION

Not Used

END OF SECTION

SECTION 01630
SUBSTITUTIONS AND PRODUCT OPTIONS

PART 1 - GENERAL

1.01 PRODUCT LIST:

A. Within 30 days after date of Contract, submit to Architect 5 copies of complete list of products and materials which are proposed for installation.

B. Prepare list on basis of each Specification section.

C. For products specified under reference standards, include with listing of each product:
   1. Name and address of manufacturer.
   2. Trade name.
   3. Model or catalog designation.
   4. Manufacturer's data, including performance and test data, reference standards.

1.02 CONTRACTOR'S OPTIONS:

A. For products specified only by reference standards, select any product meeting standards, by any manufacturer.

B. For products specified by naming several products or manufacturers, select any product and manufacturer named.

C. For products specified by naming only one product and manufacturer, there is no option, unless a substitution is approved as specified below.

1.03 SUBSTITUTIONS:

A. During Bidding, Architect will consider written requests from prime Bidders for substitutions, received at least 7 days prior to Bid Date; requests received after that time will not be considered. Approval of proposed substitutions will be set forth in an Addendum or letter of approval. Requests for substitutions shall include data listed below.

B. Within 30 days after date of Contract, Architect will consider formal requests from Contractor for substitutions of products in place of those specified. No request for substitutions will be considered after this date.

C. Submit 2 copies of request for substitution. Include in substitution:
   1. Data substantiating compliance of proposed substitution with Contract documents.
   2. For products:
      a) Product identification, including manufacturer’s name and address.
      b) Manufacturer’s literature, including product description, performance and test data and reference standards.
      c) Samples, if applicable.

d) Name and address of similar projects on which product was used and date of installation.

3. For construction methods:
   a) Detailed written descriptions of proposed method.
   b) Complete drawings illustrating methods or revisions.

4. Itemized comparison of proposed substitution with product or method specified.
5. Data relating to changes in construction schedule.

D. In making request for substitution, Bidder/Contractor represents:
   1. He has personally investigated proposed product or method and determined that it is equal or superior in all respects to that specified.
   2. He will provide same guarantee for substitution as for product or method specified.
   3. He will coordinate installation of accepted substitution into work, making such changes as may be required for work to be complete in all respects.
   4. He waives all claims for additional costs related to substitution which subsequently becomes apparent.

E. Substitutions will not be considered if:
   1. They are indicated or implied on show drawings or product data submittals without formal request as submitted in accordance with Article 1.03 of this Section.
   2. Acceptance will require substantial revision of Contract Documents.

SUBSTITUTION REQUEST
PROJECT: _____ APW PROJECT NO.: _____

TO: Roel Bazan
MNT Division
150 E. Riverside Dr.
Austin, TX 78704

FROM (CONTRACTOR/BIDDER):
_____
__

_____
___

CONTRACTOR (BIDDER) HEREBY REQUESTS ACCEPTANCE OF THE FOLLOWING PRODUCT OR SYSTEMS AS A SUBSTITUTION IN ACCORD WITH PROVISIONS OF DIVISION ONE OF THE SPECIFICATIONS:

1. SPECIFIED PRODUCT OR SYSTEM:
   Substitution request for (Generic Description): _____

   Specification Section No.: _____ Article(s) _____ Paragraph (s) _____

2. SUPPORTING DATA:
   Product data for proposed substitution is attached (description of product, reference standards, performance and test data).

   Sample is attached Sample will be sent if requested

3. QUALITY COMPARISON:

	SPECIFIED PRODUCT	SUBSTITUTION
Name brand:	_____	
Catalog No.	_____	
Manufacturer:	_____	
Vendor:	_____	
Significant Variations:	_____	
	_____	

Maintenance Service Available: _____ Yes _____ No

Spare Part Source:
_____

4. PREVIOUS INSTALLATIONS:
Identification of similar projects on which proposed substitution was used:

Project: _____ Architect: _____

Address: _____ Owner: _____
_____ Date Installed: _____
_____

5. REASON FOR NOT GIVING PRIORITY TO SPECIFIED ITEMS:

_____

_____

6. EFFECT OF SUBSTITUTION:
Proposed substitution affects other parts of Work: _____ No _____Yes (If yes, explain)

_____

_____

Substitution changes Contract Time: _____ No _____ Yes Add/Deduct _____days.

Substitution requires dimensional revision or redesign of structure or M & E Work:

_____ No _____ Yes (If yes, attach compete data)

Saving or credit to Owner, if any, for accepting substitution: $_____.

Extra cost to Owner, if any, for accepting substitution: $_____.

7. CONTRACTOR'S (BIDDER'S) STATEMENT OF CONFORMANCE OF PROPOSED SUBSTITUTION TO CONTRACT REQUIREMENT:

I/we have investigated the proposed substitution.

I/we:

___ believe that it is equal or superior in all respects to specified product, except as stated above.
___ will provide the same warranty as specified for specified product.
___ have included complete cost data and implications of the substitution.
___ will pay redesign and special inspection costs caused by the use of this product.
___ will pay additional costs to other contractors caused by the substitution.
___ will coordinate the incorporation of the proposed substitution in the Work.
____ will modify other parts of the work as may be needed, to make all parts of the work complete and functioning.
___ waive future claims for added cost to Contract caused by the substitution.

Contractor (Bidder): _____ Date: _____

By: _____.

Answer all questions and complete all blanks - use "N/A" if not applicable.

_____

ARCHITECT REVIEW AND ACTION

___ Resubmit substitution request:

___ Provide more information in following categories.

_____

___ Sign Contractor's (Bidder's) Statement of Conformance.

___ Substitution accepted.

___ Substitution is accepted with the following comments.

_____

_____

___ Substitution not accepted.

___ Substitution Request received too late.

_____ _____

Roel Bazan, R.A. Date
TxDOT

END OF SECTION

SECTION 01700
EXECUTION REQUIREMENTS

PART 1 - GENERAL

1.01 SECTION INCLUDES

A. Closeout procedures.

B. Final cleaning.

C. Starting of systems.

D. Testing, adjusting and balancing.

E. Protecting installed construction.

F. Project record documents.

G. Operation and maintenance data.

H. Manual for materials and finishes.

I. Manual for equipment and systems.

J. Spare parts and maintenance products.

K. Product warranties and product bonds.

1.02 CLOSEOUT PROCEDURES

A. Submit written certification that Contract Documents have been reviewed, Work has been inspected, and that Work is complete in accordance with Contract Documents and ready for Architect's review.

B. Provide submittals to Architect required by authorities having jurisdiction.

C. Submit final Application for Payment identifying total adjusted Contract Sum, previous payments, and sum remaining due.

1.03 FINAL CLEANING

A. Execute final cleaning prior to final project assessment.

B. Clean interior and exterior glass block, surfaces exposed to view; remove temporary labels, stains and foreign substances, polish transparent and glossy surfaces.

C. Clean equipment and fixtures to sanitary condition with cleaning materials appropriate to surface and material being cleaned.

D. Replace filters of operating equipment.

E. Clean debris from roofs, gutters, downspouts, and drainage systems.

F. Clean site; sweep paved areas, rake clean landscaped surfaces.

G. Remove waste and surplus materials, rubbish, and construction facilities from site.

1.04 STARTING OF SYSTEMS

A. Coordinate schedule for start-up of various equipment and systems.

B. Notify Architect seven days prior to start-up of each item.

C. Verify each piece of equipment or system has been checked for proper lubrication, drive rotation, belt tension, control sequence, and for conditions which may cause damage.

D. Verify tests, meter readings, and specified electrical characteristics agree with those required by equipment or system manufacturer.

E. Verify wiring and support components for equipment are complete and tested.

F. Submit a written report in accordance with Section 01300 that equipment or system has been properly installed and is functioning correctly.

1.05 TESTING, ADJUSTING AND BALANCING

A. Refer to Mechanical and Electrical Specs. for specific requirements.

B. Adjust Door Hardware for proper operation and ADA compliance.

1.06 PROTECTING INSTALLED CONSTRUCTION

A. Protect installed Work and provide special protection where specified in individual specification sections.

B. Provide temporary and removable protection for installed products. Control activity in immediate work area to prevent damage.

C. Provide protective coverings at walls, projections, jambs, sills, and soffits of openings.

D. Protect finished floors, stairs, and other surfaces from traffic, dirt, wear, damage, or movement of heavy objects, by protecting with durable sheet materials.

E. Prohibit traffic or storage upon waterproofed or roofed surfaces. When traffic or activity is necessary, obtain recommendations for protection from waterproofing or roofing material manufacturer.

F. Prohibit traffic from landscaped areas.

1.07 PROJECT RECORD DOCUMENTS

A. Maintain on site one set of the following record documents; record actual revisions to the Work:
   1. Drawings.

2. Specifications.
3. Addenda.
4. Change Orders and other modifications to the Contract.
5. Reviewed Shop Drawings, Product Data, and Samples.
6. Manufacturer's instruction for assembly, installation, and adjusting.

B. Ensure entries are complete and accurate, enabling future reference by Owner.

C. Store record documents separate from documents used for construction.

D. Record information concurrent with construction progress, not less than weekly.

E. Specifications: Legibly mark and record at each product section description of actual products installed, including the following:
1. Manufacturer's name and product model and number.
2. Product substitutions or alternates utilized.
3. Changes made by Addenda and modifications.

F. Record Drawings and Shop Drawings: Legibly mark each item to record actual construction including:
1. Measured horizontal and vertical locations of underground utilities and appurtenances, referenced to permanent surface improvements.
2. Measured locations of internal utilities and appurtenances concealed in construction, referenced to visible and accessible features of the Work.
3. Field changes of dimension and detail.
4. Details not on original Contract drawings.

G. Submit documents to Architect/Engineer with final Application for Payment.

1.08 OPERATION AND MAINTENANCE DATA

A. Submit data bound in 8-1/2 x 11 inches, three D side ring binders.

B. Prepare binder cover with printed title "OPERATION AND MAINTENANCE INSTRUCTIONS", title of project, and subject matter of binder when multiple binders are required.

C. Internally subdivide binder contents with permanent page dividers, logically organized as described below; with tab titling clearly printed under reinforced laminated plastic tabs.

D. Drawings: Provide with reinforced punched binder tab. Bind in with text; fold larger drawings to size of text pages.

E. Contents: Prepare Table of Contents for each volume, with each product or system description identified, typed on white paper, in three parts as follows:
1. Part 1: Directory, listing names, addresses, and telephone numbers of Contractor, Subcontractors, and major equipment suppliers.
2. Part 2: Operation and maintenance instructions arranged by system and subdivided by specification section. For each category, identify names, addresses, and telephone numbers of Subcontractors and suppliers. Identify the following:
   a. Significant design criteria.
   b. List of equipment.
   c. Parts list for each component.

d. Operating instructions.
e. Maintenance instructions for equipment and systems.
f. Maintenance instructions for [special] finishes, including recommended cleaning methods and materials, and special precautions identifying detrimental agents.

3. Part 3.Project documents and certificates, including the following:
   a. Shop drawings and product data.
   b. Air and water balance reports.
   c. Certificates.
   d. Originals of warranties.

1.09 SPARE PARTS AND MAINTENANCE PRODUCTS

A. Furnish spare parts, maintenance, and extra products in quantities specified in individual specification sections.

B. Deliver to site and place in location as directed by Owner; obtain receipt prior to final payment.

1.10 PRODUCT WARRANTIES AND PRODUCT BONDS

A. Obtain warranties and bonds executed in duplicate by responsible subcontractors, suppliers, and manufacturers, within ten days after completion of applicable item of work.

B. Execute and assemble transferable warranty documents and bonds from subcontractors, suppliers, and manufacturers.

C. Verify documents are in proper form, contain full information, and are notarized.

D. Include Table of Contents and assemble in three D side ring binder with durable cloth cover.

E. Submit prior to final Application for Payment.

F. Time Of Submittals:
   1. For equipment or component parts of equipment put into service during construction with Owner's permission, submit documents within ten days after acceptance.
   2. Make other submittals within ten days after Date of Substantial Completion, prior to final Application for Payment.
   3. For items of Work for which acceptance is delayed beyond Date of Substantial Completion, submit within ten days after acceptance, listing date of acceptance as beginning of warranty or bond period.

PART 2 - PRODUCTS

Not Used.

PART 3 - EXECUTION

Not Used.

END OF SECTION

SECTION 01720
PROJECT RECORD DOCUMENTS

PART 1 - GENERAL

1.01 REQUIREMENTS INCLUDED

A. Maintenance of Record Documents.

B. Submittal of Record Documents.

1.02 RELATED REQUIREMENTS

A. Section 01340 - Shop Drawings, Product Data and Samples.

B. Individual Specifications Sections: Manufacturer's certificates.

1.03 MAINTENANCE OF DOCUMENTS AND SAMPLES

A. In addition to requirements in General Conditions, Maintain at the site for Owner <u>one record copy</u> of:
   1. Contract Drawings.
   2. Specifications.
   3. Addenda.
   4. Change Orders and other modifications to the Contract.
   5. Manufacturer's certificates.
   6. Reviewed submittals.

B. Store Record Documents in Field Office apart from documents used for construction. Provide files, racks, and secure storage, as required, for Record Documents and samples.

C. Label and file Record Documents in accordance with Section number listings in Table of Contents of this Project Specifications Manual. Label each document "PROJECT RECORD" in neat, large, printed letters.

D. Maintain Record Documents in a clean, dry and legible condition. Do not use Record Documents for construction purposes.

E. Keep Record Documents available for inspection by Architect/Engineer.

1.04 RECORDING

A. Record information on a set of blue line opaque drawings, and in a copy of a Project Specifications Manual, provided by Owner.

B. Provide felt tip marking pens, maintaining separate colors for each major system, for recording information.

C. Record information concurrently with construction progress. Do not conceal any work until required information is recorded.

D. Contract Drawings: Legibly mark each item to record actual construction, including:
   1. Measured depths of elements of foundation in relation to finish floor datum.
   2. Measured horizontal and vertical locations of underground utilities and appurtenances, referenced to permanent surface improvements.
   3. Measured locations of internal utilities and appurtenances concealed in construction, referenced to visible and accessible features of construction.
   4. Field changes of dimension and detail.
   5. Changes made by Modifications.
   6. Details not on original Contract Drawings.
   7. References to related shop drawings and Modifications.

E. Specifications: Legibly mark each item to record actual construction, including:
   1. Manufacturer, trade name, and catalog number of each product actually installed, particularly optional items and substitute items.
   2. Changes made by Addenda and Modifications.

F. Other Documents: Maintain manufacturer's certifications, and other data required by individual Specifications sections.

1.05 SUBMITTALS

A. At Contract closeout, deliver to Owner:
   1. Two copies of:
      a) Operations and maintenance manuals for all mechanical equipment.
      b) All warranties.
      c) Reviewed submittals bound together in two 3-ring notebooks.
   2. One copy of:
      a) Record drawings.
      b) Record specifications manual.

B. Transmit with cover letter in duplicate, listing:
   1. Date.
   2. Project title and number.
   3. Contractor's name, address, and telephone number.
   4. Number and title of each Record Document.
   5. Signature of Contractor or authorized representative.

PART 2 – PRODUCTS

Not Used

PART 3 - EXECUTION

Not Used

END OF SECTION

SECTION 02100
SITE CLEARING

PART 1 - GENERAL

1.01 RELATED DOCUMENTS

A. Drawings and general provisions of the Contract, including General and Supplementary Conditions and Division 1 Specification Sections, apply to this Section.

1.02 SUMMARY

A. This Section includes the following:
   1. Protecting existing trees and vegetation to remain.
   2. Removing trees and other vegetation.
   3. Clearing and grubbing.
   4. Topsoil stripping.

B. Related Sections include the following:
   1. Division 1 Section "Construction Facilities and Temporary Controls" for temporary utilities, temporary construction and support facilities, temporary security and protection facilities, and environmental protection measures during site operations.
   2. Division 2 Section "Earthwork" for soil materials, excavating, backfilling, and site grading.

1.03 DEFINITIONS

A. Topsoil: Natural or cultivated surface-soil layer containing organic matter and sand, silt, and clay particles; friable, pervious, and black or a darker shade of brown, gray, or red than underlying subsoil; reasonably free of subsoil, clay lumps, gravel, and other objects more than 2 inches (50 mm) in diameter; and free of weeds, roots, and other deleterious materials.

1.04 MATERIALS OWNERSHIP

A. Except for materials indicated to be stockpiled or to remain Owner's property, cleared materials shall become Contractor's property and shall be removed from the site.

1.05 SUBMITTALS

None Required.

1.06 PROJECT CONDITIONS

A. Traffic: Minimize interference with adjoining roads, streets, walks, and other adjacent occupied or used facilities during site-clearing operations.

B. Do not close or obstruct streets, walks, or other adjacent occupied or used facilities without permission from Owner and authorities having jurisdiction.
   1. Provide alternate routes around closed or obstructed traffic ways if required by authorities having jurisdiction.

C. Improvements on Adjoining Property: Authority for performing indicated removal and alteration work on property adjoining Owner's property will be obtained by Owner before award of Contract.
D. Notify utility locator service for area where Project is located before site clearing.

PART 2 - PRODUCTS

Not Applicable

PART 3 - EXECUTION

3.01 PREPARATION

E. Protect and maintain benchmarks and survey control points from disturbance during construction.

F. Provide erosion-control measures to prevent soil erosion and discharge of soil-bearing water runoff or airborne dust to adjacent properties and walkways.

G. Locate and clearly flag trees and vegetation to remain or to be relocated.

H. Protect existing site improvements to remain from damage during construction.
   1. Restore damaged improvements to their original condition, as acceptable to Owner.

3.02 TREE PROTECTION

A. Erect and maintain a temporary fence around drip line of individual trees or around perimeter drip line of groups of trees to remain. Remove fence when construction is complete.

B. Do not store construction materials, debris, or excavated material within drip line of remaining trees.
   1. Do not permit vehicles, equipment, or foot traffic within drip line of remaining trees.

C. Do not excavate within drip line of trees, unless otherwise indicated.
D. Repair or replace trees and vegetation indicated to remain that are damaged by construction operations, in a manner approved by Architect.
   1. Employ a qualified arborist, licensed in jurisdiction where Project is located, to submit details of proposed repairs and to repair damage to trees and shrubs.
   2. Replace trees that cannot be repaired and restored to full-growth status, as determined by the qualified arborist.

E. Protect existing trees in the following manner:
   1. Install protective measures to protect tree trunk and root zones as shown in the plans.
      a. Install a protective fence around the perimeter of the drip line.
      b. Strap boards around tree trunks.
      c. Cover ground area below canopies with 3 to 4 inches of coarse, shredded or chipped mulch.
   2. Do not allow vehicles, equipment, stockpiled materials, trash containers, portable toilets, temporary structures, or storage under tree canopies.
   3. Do not operate or clean machinery, tools, or equipment under tree canopies.
   4. Do not discard any paints, solvents, fuels, chemicals, or other contaminated substances that might cause injury to the root systems.

5. Do not dig or trench below tree canopies.

3.03 CLEARING AND GRUBBING

A. Remove obstructions, trees, shrubs, grass, and other vegetation to permit installation of new construction. Removal includes digging out stumps and obstructions and grubbing roots.

B. Do not remove trees, shrubs, and other vegetation indicated to remain or to be relocated.
   1. Cut minor roots and branches of trees indicated to remain in a clean and careful manner where such roots and branches obstruct installation of new construction.
   2. Completely remove stumps, roots, obstructions, and debris extending to a depth of 18 inches (450 mm) below exposed subgrade.
   3. Use only hand methods for grubbing within drip line of remaining trees.

C. Fill depressions caused by clearing and grubbing operations with satisfactory soil material, unless further excavation or earthwork is indicated.
   1. Place fill material in horizontal layers not exceeding 8-inch (200-mm) loose depth, and compact each layer to a density equal to adjacent original ground.

3.04 TOPSOIL STRIPPING

A. Remove sod and grass before stripping topsoil.

B. Strip topsoil to whatever depths are encountered in a manner to prevent intermingling with underlying subsoil or other waste materials.

   1. Strip surface soil of unsuitable topsoil, including trash, debris, weeds, roots, and other waste materials.

C. Stockpile topsoil materials away from edge of excavations without intermixing with subsoil. Grade and shape stockpiles to drain surface water. Cover to prevent windblown dust.
   1. Limit height of topsoil stockpiles to 72 inches (1800 mm).
   2. Do not stockpile topsoil within drip line of remaining trees.
   3. Stockpile surplus topsoil and allow for re-spreading deeper topsoil.
   4. Topsoil will be re-spread on site at direction of Engineer.

3.05 DISPOSAL

A. Disposal: Remove surplus soil material, unsuitable topsoil, obstructions, demolished materials, and waste materials, including trash and debris, and legally dispose of them off Owner's property.

END OF SECTION

SECTION 02200
EARTHWORK

PART 1 - GENERAL

1.01 SCOPE:
Provide complete earthwork including general excavation and excavation for structure; footing excavation; rough grading; fill and backfill and finish grading.

1.02 SAMPLES:
Submit samples of materials as required below. Samples of earth materials shall be delivered to job site in sufficient quantity necessary for testing laboratory to adequately investigate soil.

1.03 BASIS FOR BIDS:
Materials at site are expected to be in accordance with materials indicated on logs and test holes included. Bids shall be based on excavating and filling with materials encountered at site except where special fill or backfill materials are specified herein or indicated on Drawings. No allowance or extra payments will be made by reason of variation in types of soil encountered or variations in their moisture contents. Additional fill material required shall be furnished and included as a part of the work. Removal of excess or objectionable materials shall be included as a part of the work.

1.04 COORDINATION:
Coordinate excavation work with other trades for proper scheduling of work.

PART 2 - PRODUCTS

2.01 STOCKPILING:
Material cut from building areas which is suitable for backfilling may be stored on site to be distributed later. Fill material required to be hauled in may be stockpiled at site until used, provided it is properly handled to prevent contamination with undesirable materials. Location of stockpiles shall be subject to approval of Architect. Stockpile topsoil separate from excavated sub-soil.

2.02 SURPLUS MATERIALS:
Excavated materials not to be used in fills and backfills on this project shall be removed from site immediately. Materials containing rubbish, debris or rocks shall be removed.

2.03 MATERIALS:

A. General Fill: Suitable existing excavated on-site dark brown clay soil free from vegetable matter, debris and other deleterious matter, unless otherwise noted

B. Select Fill: Beneath building shall consist of an inactive inert material having a maximum plasticity index (PI) of 4-15. Submit samples for approval, complete with lab analysis of fill if requested by Architect.

C. Top Soil: Clean natural top soil free of vegetation, debris and other deleterious matter. Upper 6" of topsoil stripped may be used.

D. Backfill: Suitable existing excavated on site soil free from deleterious matter, unless noted otherwise.

E. Backfill: (Walls and retaining walls): Granular, free draining, cohesionless soil. Submit samples and lab analysis for approval.

F. Sub-Soil Drainage Pipe Backfill: Washed pea gravel, well graded, 1/4" to 1/2" size, free of clay lumps, shale, or other materials which might disintegrate. Submit samples for approval.

G. Gravel Cushion under Walks and Concrete Paving Area: Select crushed gravel ranging from 1/4` to 1" in size shall be thoroughly wetted and compacted before concrete is placed.

PART 3 - EXECUTION

3.01 ROUGH GRADING:
Excavation and rough grading shall be made to lines and grades shown. Planting and Lawn areas shall be over cut to allow a layer of topsoil not less that 6" thick. Excavations shall be maintained to drain and shall be kept free of excess water. Ponding of water on site will not be permitted. Remove objectionable and excess materials from site when excavated.

3.02 STRUCTURAL EXCAVATION:

A. Locate and mark all existing underground utilities and services before beginning structural excavation.
B. Provide excavation for structures and footings, as required for construction, bracing and removal of forms. Bottom of excavating shall be reasonable level. Maintain excavations in as near their natural moisture condition as possible.

3.03 SUB-SOIL DRAINAGE EXCAVATION:
Excavate or trench as required for sub-soil drainage pipes. Trenches shall be sized and sloped as detailed.

3.04 EXCAVATION BENEATH SLABS:
Beneath slabs on grades, excavate and remove light brown and black clay and silty clay soil.

3.05 FILLING (OUTSIDE STRUCTURE):
Roughen and loosen filled areas before placing of fill material. Spread suitable fill material in uniform layers over area not to exceed 6" thick compaction. Wet and work materials as required for proper compaction and thoroughly mix. Compaction shall be by tamping rollers or by utilizing excavation equipment to spread and compact fill to a uniform density equal to natural density of material before excavating. Areas adjacent to building, or where compacting equipment cannot work, shall be compacted with approved tampers. Compact filled areas to lines and grades shown, with allowances for a final layer of topsoil at least 6" thick in lawn areas.

END OF SECTION

SECTION 02210
GEOTECHNICAL DATA

PART 1 - GENERAL

1.01 INVESTIGATION:

Soil and Subsurface Investigations were conducted at the Site, the results of which are to be found in the report, number G1571-04, conducted by ETTL Engineers and Consultants.

Plan of Borings and Log of Borings are attached.

A copy of the full report is available at the Architect's office for review.

Bidders are urged to examine soils investigation data and to make their own investigation of the site before bidding.

END OF SECTION

SECTION 02224
TRENCHING

PART 1 - GENERAL

1.1 DESCRIPTION OF WORK:

A. Furnish all labor, materials, tools, equipment and incidentals necessary to accomplish the required trenching to complete the project as shown on the drawings and as specified herein.

B. The standards and requirements listed in this specification shall govern the trenching for all types of buried utilities, including water, waste water, and electrical. Refer also to plans, notes, and details in the project drawings for additional requirements.

1.2 REFERENCES:

A. TDH - Texas Department of Health, Water System Regulations

B. TXDOT - Texas Department of Transportation, "Standard Specifications for Construction of Highways, Streets and Bridges."

C. TMUTCD - Texas Manual on Uniform Traffic Control Devices.

1.3 PROTECTION OF EXISTING FACILITIES:

A. Prior to beginning any earthwork operations, protect existing and permanent objects including existing utilities, poles, guys, and roadways.

B. The Contractor shall be responsible for locating all existing underground utilities prior to starting excavation operations.

1.4 PAVING REPAIRS:

A. The Contractor shall repair all paved areas that are cut when trenching or damaged as a result of machinery or operations by the Contractor or Subcontractors. The fill shall be completed and compacted a minimum of 4 inches below the undisturbed paving surface. New compacted base shall be a minimum of 2 inches, and new paving shall be a minimum of 2 inches. See Texas Department of Transportation, "Standard Specifications for Construction of Highways, Streets and Bridges" for specific paving requirements.

1.5 SUB-SURFACE CONDITIONS:

A. No subsurface borings have been made in the areas where trenching is to be accomplished. Bidders are responsible for ascertaining pertinent site conditions and subsurface conditions prevalent in the area of work.

PART 2 - PRODUCTS

2.1 SAND:

A. Where use of sand is designated in these specifications or on the drawings, material shall be clean, granular material composed mainly of mineral matter free of mud, salt, clay lumps, vegetation, or debris. Sand as defined here shall be Class II, Soil Group SW (Well-graded sands and gravelly sands; little or no fines), but shall pass 100 percent through a 3/8 inch (9.5 mm) Sieve, and less than 5 percent through a No. 200 (0.075 mm) Sieve.

2.2 FILL:

A. Where use of fill is designated on the drawings, excess excavated materials or materials from other locations on the project site may be used, or the Contractor may obtain approved fill material from a source outside the premises.

B. Fill material shall be free of vegetation, debris, rocks, and boulders exceeding 2 inches in their greatest dimension. The "fines" resulting from the use of a trenching machine may be used as fill and/or bedding if the Owner inspects and approves the materials.

C. Fill material used under all pavement crossing repairs shall be cement stabilized with a 2- sack mix prepared with Portland cement and sand with a 7 to 9 slump. This mixture may be delivered or mixed on site with approved fill material

2.3 HOT MIX, COLD LAID ASPHALTIC CONCRETE:

A. The Contractor shall notify the Owner's representative of the source of his asphaltic concrete and submit its composition for approval. See Texas Department of Transportation, "Standard Specifications for Construction of Highways, Streets and Bridges" for specific requirements.

2.4 CRUSHED STONE:

A. Where use of crushed stone is designated on the drawings, material shall consist of angular material containing hard durable particles or fragments of stone or gravel.

B. The material shall be free from vegetation of all kinds, loam lumps or excessive amounts of clay, rocks or boulders exceeding 2 inches in their greatest dimension, and other foreign substances.

C. Approval of the material shall be obtained from the Inspector and/or Project Engineer prior to use for the project.

PART 3 - EXECUTION

3.1 FACILITY OPERATIONS:

A. The Contractor shall be responsible for public safety and security around the construction sites. All temporary fencing, barricades, warning lights, signs and flagmen shall be provided and maintained by the Contractor, and shall provide protection of the public from open excavations, trenches, etc., in addition to all other construction operations. The Contractor shall comply with TXDOT "Standard Specifications for Construction of Highways, streets and Bridges," Item 502,

and TMUTCD (Texas Manual on Uniform Traffic Control Devices).

3.2 EXCAVATION AND TRENCH PROTECTION:

A. The walls and faces of excavations and excavated trenches more than 5 feet deep or with evident hazardous ground movement in which workers are exposed to danger from moving ground shall be guarded by shoring system, trench boxes or trench shields, sloping of the ground, or other equivalent means.

B. The determination of the angle of repose and the design of the supporting system shall be based on careful evaluation of the depth of the cut, material, changes in material, water content variations, and external loadings. The minimum requirements for determining the angle of repose and for the shoring of excavations or trenches, shall be in accordance with the latest edition of Part 1926, Subpart P, Excavations, of the Occupational Safety and Health Administration's (OSHA) "OSHA Safety and Health Standards (29 CFR 1926/1910)". Existing vegetation shall not be damaged or removed to accomplish a required angle of repose unless previously approved by the Owner in writing.

C. Shields, boxes or shoring shall be used when the location of the excavation is in a restricted area or within close proximity to other utility lines or structures. Shoring walls shall be used where necessary.

3.3 EXCAVATION FOR TRENCHING:

A. The Contractor shall mark the limits proposed for clearing for approval by the Owner prior to starting any work. The Contractor shall not perform clearing outside the approved clearing limits without the prior written consent of the Owner.

B. Individual trees, groups of trees, and other vegetation outside the clearing limits shall be thoroughly protected from damage incident to construction operations by the erection of barriers or by such other means, as the circumstances require, as approved by the Owner. All trees including low hanging limbs within the immediate area of construction shall be adequately protected to prevent damage from the construction operations and/or equipment. All excavation within the outermost limb radius of all trees shall be accomplished with extreme care. All roots located within this outermost limb radius shall be brought to the attention of the Owner before they are cut or damaged in any way. The Owner will give immediate guidance concerning how to proceed.

C. Where excavation requires the opening of existing walks, streets, drives, other existing pavement, or planted areas, such surfaces shall be cut as required to install new lines and to make new connections to existing lines. The sizes of the cut shall be held to a minimum, consistent with the work to be accomplished. After the installation of the new work is completed and the excavation has been backfilled and flooded as specified, the area shall be patched, using materials to match those removed or disturbed. The patches shall thoroughly bond with the original surfaces shall be level with them, and shall meet all of the requirements established by the authorities having jurisdiction over such areas.

D. Trenches shall be open cut trenches with vertical sides. Excavated material shall be piled in a manner that will not endanger the work. Excavation shall include removal of all materials encountered.

E. The Contractor shall excavate trenches with a minimum width of the diameter of the piping plus 12 inches. Maximum width of trench shall be the diameter of the piping plus 24 inches. The trenches shall be excavated true to line so that a clear space not less than 6" nor more than 12" in width is provided on each side of the pipe.

F. The bottom of trenches shall be accurately graded to provide proper uniform bearing and support for each section of the pipe on a minimum of 4" of sand fill at every point along its entire length, except for portions of the pipe sections where it is necessary to excavate for bell holes for the proper sealing of pipe joints.

G. Bell holes shall be dug after the trench bottom has been graded. Bell holes for pipe joints shall be 12" in depth below the trench bottom and shall extend from a point 6" back of the face of the bell. Such bell holes shall be of sufficient width to provide ample room for pipe assembly. Bell holes for water pipe shall be excavated only to an extent sufficient to permit accurate work in the making of the joints and to insure that the pipe, for a maximum of its length, will rest upon the prepared bottom of the trench. Depressions for joints other than bell-and-spigot shall be made in accordance with the recommendations of the joint manufacturer for the particular type of joint used.

H. Except at locations where excavation of rock from the bottom of trenches is required, care shall be taken not to excavate below the depths required. Where rock excavation is required, the rock shall be excavated to a minimum overdepth of 6" below the trench depths specified. The overdepth rock excavation and all excess trench excavation shall be backfilled with sand.

I. Whenever wet or otherwise unstable soil is incapable of properly supporting the pipe is encountered in the trench bottom, such soil shall be removed to a depth and for the trench lengths required, and then backfilled to trench bottom grade, as hereinafter specified, with sand.

J. The Contractor shall perform all excavations to the depths indicated on the Drawings and/or required for the installation of piping, utility systems, etc. All exterior lines shall be installed with a minimum cover of 18", including sand and fill, unless noted otherwise. Generally, more cover shall be provided if grade will permit.

K. All grading in the vicinity of the excavations shall be controlled to prevent surface ground water from flowing into the excavations. Any water accumulated in the excavations shall be removed by pumping or other acceptable method.

L. During excavation, material suitable for backfilling shall be stacked in an orderly manner a sufficient distance back from edges of trenches to avoid overloading and prevent slides or cave-ins. Material unsuitable for backfilling shall be wasted and removed from the job site as specified herein.

M. All trenching is unclassified. Contractor shall be responsible for trenching in all materials.

3.4 DISPOSAL:

A. All material cleared from the site and all excess and unsuitable materials excavated during construction operations shall become the property of the Contractor.

B. Remove material that is excess and unsuitable from the site and dispose of it.

3.5 SLEEVES:

A. All pipes shall be sleeved where routed under roads. Piping routed under walkways does not require sleeving. Sleeves shall be Schedule 80 PVC.

B. Install sleeves after excavation of pavement or boring under road. Coordinate sleeving for water pipes and electrical conduits that cross roads at the same locations.

3.6 CUTTING PAVEMENT:

A. The Contractor shall stake each proposed trench route that passes through paved areas and cut pavement with a clean, even cut using a pavement saw.

B. Pavement surface shall be pre-cut slightly wider than the width of the trench prior to trench excavation.

C. All loose pavement shall be removed by hand, leaving all base material undisturbed in order to prevent any undermining of adjacent pavement surface during trenching operation.

D. See Texas Department of Transportation, "Standard Specifications for Construction of Highways, Streets and Bridges" for additional requirements.

3.7 FILL AND BACKFILL:

A. Trenches shall not be backfilled until all required tests are performed and until the piping, utilities systems, etc., as installed are certified by the Owner's inspector to conform to the requirements specified hereinafter. Trenches shall not be backfilled beyond a depth of 4 inches without the inspection and approval of the Owners representative. In the event that a trench is backfilled without the specified inspection and testing, then the Contractor shall excavate the trench, exposing the pipe, dispose of the excavated material, allow for the inspection, perform the specified tests, and then proceed to backfill the trench as specified.

B. Complete fill and backfill to grades indicated on drawings or to match the grades existing prior to excavation. The Contractor shall be responsible for providing sufficient backfill material to insure completed work will not have ruts, holes, or depressions over backfilled trenches. Top of backfilled trench shall be slightly mounded above surrounding grade to allow for settlement, except for backfilled trenches in pavement cuts.

C. All non-metallic piping systems shall be installed with a minimum 6-gage solid copper wire centered and strapped on the top of the pipe. The wire shall be securely held in place so that it will not be moved out of position by the sand backfill and compaction operation. The wire shall be installed along the entire length of the pipe, and shall be electrically continuous. The ends of discontinuous wire shall be joined using electrical brass clamps. The wire may be insulated, however insulation is not required.

D. Trenches shall be carefully backfilled with sand to a minimum depth of 6 inches above the top of the pipe unless noted otherwise. The next layer and subsequent layers of backfill may be excavated materials approved for backfilling, consisting of earth, loam, sandy clay, sand and gravel, soft shale, or other approved materials free from large clods of earth or stones larger than 1" in diameter, flooded until the pipe has cover of not less than one foot. The remainder of the backfill material shall then be placed into the trenches, moistened, and tamped or flooded in one-foot layers. Blasted rock, broken concrete or pavement, and large boulders shall not be used as backfill material. Any trenches improperly backfilled, or where settlement occurs, shall be reopened to completely expose the pipe, and then backfilled in strict accordance with these specifications.

E. Compaction: Clean, washed sand shall be bedded around all water piping and placed in the trench as shown on the drawings. This sand backfill shall be water-tamped by flooding this portion of the trench with water and allowing the sand to settle as the water recedes or is absorbed.

F. Compacting equipment and method of compaction for fill shall be such that uniform density will be obtained over the entire area and depth of material being compacted. Hand tamping shall be done with mechanical hand tamper. Compact areas to a density equal to the surrounding undisturbed soil unless noted otherwise. Backfill shall be compacted in 6" lifts.

3.8 PATCHING PAVEMENT:

A. The Contractor shall prepare the pavement surface on either side of the trench by removal of all excavated soil, gravel and debris from the adjacent pavement surfaces. The pavement edge of the trench shall be a straight, clean edge at least 3" back from the walls of the trench. If pavement edge is damaged during trenching or backfill, the edge shall be re-cut to obtain a clean, even edge.

B. The stabilized backfill material for pavement crossings shall be allowed to cure for a minimum of 24 hours prior to preparation for pavement patching. Each crossing shall be primed over the entire surface with type RC-30 asphalt. The edges of the existing pavement shall also be tacked with type RC-30 asphalt. This tack shall be allowed to cure long enough to allow excess RC-30 to soak in but tack material should still be "sticky" so that cold laid asphalt will adhere to surfaces.

C. The Contractor shall use a 2" hot mixed, cold laid asphaltic concrete compacted to complete backfilling of the trench. Sufficient asphaltic concrete shall be placed and compacted to insure a level or slightly mounded surface above the existing pavement.

D. See Texas Department of Transportation, "Standard Specifications for Construction of Highways, Streets and Bridges" for additional requirements.

END OF SECTION

SECTION 02361
TERMITE CONTROL

PART 1 - GENERAL

1.01 RELATED DOCUMENTS

A. Drawings and general provisions of the Contract, including General and Supplementary Conditions and Division 1 Specification Sections, apply to this Section.

1.02 SUMMARY

A. This Section includes the following for termite control:
   1. Soil treatment.

1.03 DEFINITIONS

A. EPA: Environmental Protection Agency.

B. PCO: Pest control operator.

1.04 SUBMITTALS

A. Product Data: Treatments and application instructions, including EPA-Registered Label.

B. Warranties: Special warranties specified in this Section.

1.05 QUALITY ASSURANCE

A. Applicator Qualifications: A PCO who is licensed according to regulations of authorities having jurisdiction to apply termite control treatment in jurisdiction where Project is located and who is experienced and has completed termite control treatment similar to that indicated for this Project and whose work has a record of successful in-service performance.

B. Regulatory Requirements: Formulate and apply termiticides, and label with a Federal registration number, to comply with EPA regulations and authorities having jurisdiction.

1.06 PROJECT CONDITIONS

A. Environmental Limitations: To ensure penetration, do not treat soil that is water saturated or frozen. Do not treat soil while precipitation is occurring. Comply with EPA-Registered Label requirements and requirements of authorities having jurisdiction.

1.07 COORDINATION

A. Coordinate soil treatment application with excavating, filling, and grading and concreting operations. Treat soil under footings, grade beams, and ground-supported slabs, before construction.

1.08 WARRANTY

A. General Warranty: Special warranty specified in this Article shall not deprive Owner of other rights Owner may have under other provisions of the Contract Documents and shall be in addition to, and run concurrent with, other warranties made by Contractor under requirements of the Contract Documents.

B. Special Warranty: Written warranty, signed by applicator and Contractor certifying that termite control work, consisting of applied soil termiticide treatment, will prevent infestation of subterranean termites. If subterranean termite activity or damage is discovered during warranty period, re-treat soil and repair or replace damage caused by termite infestation.

C. Warranty Period: Three years from date of Substantial Completion.

D. Retain paragraph above or below, or revise warranty period to suit Project. Five years is common in temperate regions. Three years is common in tropical and subtropical regions. Coordinate with local applicators for type and extent of normal warranty periods.

PART 2 - PRODUCTS

2.01 SOIL TREATMENT

A. Termiticide: Provide an EPA-registered termiticide complying with requirements of authorities having jurisdiction, in a soluble or emulsible, concentrated formulation that dilutes with water or foaming agent, and formulated to prevent termite infestation. Use only soil treatment solutions that are not harmful to plants. Provide quantity required for application at the label volume and rate for the maximum termiticide concentration allowed for each specific use, according to the product's EPA-Registered Label.

B. Available Manufacturers: Subject to compliance with requirements, manufacturers offering products that may be incorporated into the Work include, but are not limited to, the following:

1. Gharda USA, Inc.-Navigator 4TC-Chlorpyrifos Termitide Concentrate, 1.0% in water emulsion.
2. Permathrin-Dragnet, Torpedo, 0.5% in water emulsion.

PART 3 - EXECUTION

3.01 EXAMINATION

A. Examine substrates, areas, and conditions, with Applicator present, for compliance with requirements for moisture content of the soil, interfaces with earthwork, slab and foundation work, landscaping, and other conditions affecting performance of termite control. Proceed with application only after unsatisfactory conditions have been corrected.

3.02 PREPARATION

A. General: Comply with the most stringent requirements of authorities having jurisdiction and with manufacturer's written instructions for preparing substrate. Remove all extraneous sources of wood cellulose and other edible materials such as wood debris, tree stumps and roots, stakes, formwork, and construction waste wood from soil and around foundations.

B. Soil Treatment Preparation: Remove foreign matter and impermeable soil materials that could decrease treatment effectiveness on areas to be treated. Loosen, rake, and level soil to be treated, except previously compacted areas under slabs and footings. Termiticides may be applied before placing compacted fill under slabs if recommended by termiticide manufacturer.

C. Fit filling hose connected to water source at the site with a backflow preventer, complying with requirements of authorities having jurisdiction.

3.03 APPLICATION, GENERAL

A. General: Comply with the most stringent requirements of authorities having jurisdiction and with manufacturer's EPA-Registered Label for products.

3.04 APPLYING SOIL TREATMENT

A. Application: Mix soil treatment termiticide solution to a uniform consistency. Provide quantity required for application at the label volume and rate for the maximum specified concentration of termiticide, according to manufacturer's EPA-Registered Label, to the following so that a continuous horizontal and vertical termiticidal barrier or treated zone is established around and under building construction. Distribute the treatment evenly.

1. Slabs-on-Grade and Basement Slabs: Under ground-supported slab construction, including footings, building slabs, and attached slabs as an overall treatment. Treat soil materials before concrete footings and slabs are placed.
2. Foundations: Adjacent soil including soil along entire inside perimeter of foundation walls, along both sides of interior partition walls, around plumbing pipes and electric conduit penetrating slab, and around interior column footers, piers, and chimney bases; and along entire outside perimeter, from grade to bottom of footing. Avoid soil washout around footings.

B. Avoid disturbance of treated soil after application. Keep off treated areas until completely dry.

C. Protect termiticide solution, dispersed in treated soils and fills, from being diluted until ground-supported slabs are installed. Use waterproof barrier according to EPA-Registered Label instructions.

D. Post warning signs in areas of application.

E. Reapply soil treatment solution to areas disturbed by subsequent excavation, grading, landscaping, or other construction activities following application.

END OF SECTION

SECTION 02741
HOT-MIX ASPHALT PAVING / STRIPING

PART 1 - GENERAL

1.01 RELATED DOCUMENTS

A. Drawings and general provisions of the Contract, including General and Supplementary Conditions and Division 1 Specification Sections, apply to this Section.

1.02 SUMMARY

A. This Section includes the following:
   1. Hot-mix asphalt paving.
   2. Pavement-marking paint.

B. Related Sections include the following:

   1. Division 2 Section "Earthwork" for aggregate sub-base and base courses and for aggregate pavement shoulders.
   2. Division 2 Section "Pavement Joint Sealants" for joint sealants and fillers at paving terminations.

1.03 DEFINITIONS

A. Hot-Mix Asphalt Paving Terminology: Refer to ASTM D 8 for definitions of terms.

B. DOT: Department of Transportation.

1.04 SYSTEM DESCRIPTION

A. Provide hot-mix asphalt paving according to materials, workmanship, and other applicable requirements of standard specifications of state or local DOT.

   1. Standard Specification: See 340, Hot Mix Asphaltic Concrete Pavement, and any related items, of the Standard Specifications for Construction and Maintenance of Highways, Streets, and Bridges (1993).
   2. Measurement and payment provisions and safety program submittals included in standard specifications do not apply to this Section.

1.05 SUBMITTALS

A. Product Data: For each type of product indicated. Include technical data and tested physical and performance properties.

B. Job-Mix Designs: Certification, by authorities having jurisdiction, of approval of each job mix proposed for the Work.

C. Job-Mix Designs: For each job mix proposed for the Work.

D. Material Test Reports: For each paving material.

E. Material Certificates: For each paving material, signed by manufacturers.

1.06 QUALITY ASSURANCE

A. Manufacturer Qualifications: A qualified manufacturer.

1. Manufacturer shall be a paving-mix manufacturer registered with and approved by authorities having jurisdiction or the DOT of the state in which Project is located.

B. Testing Agency Qualifications: Qualified according to ASTM D 3666 for testing indicated, as documented according to ASTM E 548.

C. Regulatory Requirements: Comply with TxDOT specifications previously referenced for asphalt paving work.

D. Asphalt-Paving Publication: Comply with AI MS-22, "Construction of Hot Mix Asphalt Pavements," unless more stringent requirements are indicated.

1.07 DELIVERY, STORAGE, AND HANDLING

A. Deliver pavement-marking materials to Project site in original packages with seals unbroken and bearing manufacturer's labels containing brand name and type of material, date of manufacture, and directions for storage.

B. Store pavement-marking materials in a clean, dry, protected location within temperature range required by manufacturer. Protect stored materials from direct sunlight.

1.08 PROJECT CONDITIONS

A. Environmental Limitations: Do not apply asphalt materials if subgrade is wet or excessively damp or if the following conditions are not met:
1. Prime and Tack Coats: Minimum surface temperature of 60 deg F (15.5 deg C).
2. Asphalt Base Course: Minimum surface temperature of 40 deg F (4 deg C) and rising at time of placement.
3. Asphalt Surface Course: Minimum surface temperature of 60 deg F (15.5 deg C) at time of placement.

B. Pavement-Marking Paint: Proceed with pavement marking only on clean, dry surfaces and at a minimum ambient or surface temperature of 40 deg F (4 deg C) for oil-based materials, 50 deg F (10 deg C) for water-based materials, and not exceeding 95 deg F (35 deg C).

PART 2 - PRODUCTS

2.01 AGGREGATES

A. Must comply with previously referenced TxDOT specifications.

2.02 ASPHALT MATERIALS

A. Must comply with previously referenced TxDOT specifications.

2.03 AUXILIARY MATERIALS

B. Must comply with previously referenced TxDOT specifications.

2.03 MIXES

A. Must comply with previously referenced TxDOT specifications.

PART 3 - EXECUTION

3.01 EXAMINATION

A. Must comply with previously referenced TxDOT specifications.

3.02 SURFACE PREPARATION

A. Must comply with previously referenced TxDOT specifications.

3.03 HOT-MIX ASPHALT PLACING

A. Must comply with previously referenced TxDOT specifications.

3.04 JOINTS

A. Must comply with previously referenced TxDOT specifications.

3.05 COMPACTION

A. Must comply with previously referenced TxDOT specifications.

3.06 INSTALLATION TOLERANCES

A. Must comply with previously referenced TxDOT specifications.

3.07 PAVEMENT MARKING

A. Do not apply pavement-marking paint until layout, colors, and placement have been verified with Architect.

B. Allow paving to age for 30 days before starting pavement marking.

C. Sweep and clean surface to eliminate loose material and dust.

D. Apply paint with mechanical equipment to produce pavement markings, of dimensions indicated, with uniform, straight edges. Apply at manufacturer's recommended rates to provide a minimum wet film thickness of 15 mils (0.4 mm).

3.08 FIELD QUALITY CONTROL

A. Testing Agency: Owner will engage a qualified independent testing and inspecting agency to perform field tests and inspections and to prepare test reports.
   1. Testing agency will conduct and interpret tests and state in each report whether tested Work complies with or deviates from specified requirements.

B. Additional testing and inspecting, at Contractor's expense, will be performed to determine compliance of replaced or additional work with specified requirements.

C. Thickness: In-place compacted thickness of hot-mix asphalt courses will be determined according to the previously referenced TxDOT Specifications.

D. Surface Smoothness: Finished surface of each hot-mix asphalt course will be tested for compliance with smoothness tolerances.

E. In-Place Density: Testing agency will take samples of uncompacted paving mixtures and compacted pavement according to previously referenced TxDOT specifications.

F. Remove and replace or install additional hot-mix asphalt where test results or measurements indicate that it does not comply with specified requirements.

END OF SECTION

SECTION 02751
CEMENT CONCRETE

PART 1 - GENERAL

1.01 RELATED DOCUMENTS

A. Drawings and general provisions of the Contract, including General and Supplementary Conditions and Division 1 Specification Sections, apply to this Section.

1.02 SUMMARY

A. This Section includes exterior cement concrete for the following:
   1. Curbs and gutters.
   2. Sidewalks
   3. Retaining walls

B. Related Sections include the following:

   1. Division 2 Section "Earthwork" for subgrade preparation, grading, and sub-base course.
   2. Division 2 Section "Pavement Joint Sealants" for joint sealants within concrete pavement and at isolation joints of concrete pavement with adjacent construction.
   3. Division 3 Section "Cast-in-Place Concrete" for general building applications of concrete.

1.03 DEFINITIONS

A. Cementitious Materials: Portland cement alone or in combination with one or more of blended hydraulic cement, expansive hydraulic cement, fly ash and other pozzolans, ground granulated blast-furnace slag, and silica fume.

1.04 SUBMITTALS

A. Design Mixes: For each concrete mix. Include alternate mix designs when characteristics of materials, project conditions, weather, test results, or other circumstances warrant adjustments.

B. Material Test Reports: From a qualified testing agency indicating and interpreting test results for compliance of the following with requirements indicated, based on comprehensive testing of current materials:
   1. Cementitious materials and aggregates.
   2. Steel reinforcement and reinforcement accessories.
   3. Admixtures.
   4. Curing compounds.
   5. Bonding agent or adhesive.
   6. Joint fillers.

1.05 QUALITY ASSURANCE

A. Installer Qualifications: An experienced installer who has completed work similar in material, design, and extent to that indicated for this Project and whose work has resulted in construction with a record of successful in-service performance.

B. Manufacturer Qualifications: Manufacturer of ready-mixed concrete products complying with ASTM C 94 requirements for production facilities and equipment.

1. Manufacturer must be certified according to the National Ready Mix Concrete Association's Plant Certification Program.

C. Testing Agency Qualifications: An independent testing agency, acceptable to authorities having jurisdiction, qualified according to ASTM C 1077 and ASTM E 329 to conduct the testing indicated, as documented according to ASTM E 548.

D. Source Limitations: Obtain each type or class of cementitious material of the same brand from the same manufacturer's plant and each aggregate from one source.

E. ACI Publications: Comply with ACI 301, "Specification for Structural Concrete," unless modified by the requirements of the Contract Documents.

F. Concrete Testing Service: Owner will engage a qualified independent testing agency to perform material evaluation tests and to design concrete mixes.

1.06 PROJECT CONDITIONS

A. Traffic Control: Maintain access for vehicular and pedestrian traffic as required for other construction activities.

PART 2 - PRODUCTS

2.01 FORMS

A. Form Materials: Plywood, metal, metal-framed plywood, or other approved panel-type materials to provide full-depth, continuous, straight, smooth exposed surfaces.
1. Use flexible or curved forms for curves of a radius 100 feet (30.5 m) or less.

B. Form-Release Agent: Commercially formulated form-release agent that will not bond with, stain, or adversely affect concrete surfaces and will not impair subsequent treatments of concrete surfaces.

2.02 STEEL REINFORCEMENT

A. Reinforcement Bars: ASTM A 615/A 615M, Grade 60 (Grade 420), deformed.

B. Steel Bar Mats: ASTM A 184/A 184M; with ASTM A 615/A 615M, Grade 60 (Grade 420), deformed bars; assembled with clips.

C. Plain Steel Wire: ASTM A 82, as drawn.

D. Epoxy-Coated Wire: ASTM A 884/A 884M, Class A coated, plain steel.

E. Joint Dowel Bars: Plain steel bars, ASTM A 615/A 615M, Grade 60 (Grade 420). Cut bars true to length with ends square and free of burrs.

F. Bar Supports: Bolsters, chairs, spacers, and other devices for spacing, supporting, and fastening reinforcement bars, welded wire fabric, and dowels in place. Manufacture bar supports according to CRSI's "Manual of Standard Practice" from steel wire, plastic, or pre-cast concrete or fiber-reinforced concrete of greater compressive strength than concrete, and as follows:
   1. Equip wire bar supports with sand plates or horizontal runners where base material will not support chair legs.

G. Epoxy Repair Coating: Liquid two-part epoxy repair coating, compatible with epoxy coating on reinforcement.

2.03 CONCRETE MATERIALS

A. General: Use the same brand and type of cementitious material from the same manufacturer throughout the Project.

B. Portland cement: ASTM C 150, Type I or II.
   1. Fly Ash: ASTM C 618, Class F or C.

C. Aggregate: ASTM C 33, uniformly graded, from a single source, with coarse aggregate as follows:Class: 4M.
   2. Maximum Aggregate Size: 1 inch (25 mm) nominal.
   3. Do not use fine or coarse aggregates containing substances that cause spalling.

D. Water: ASTM C 94.

2.04 ADMIXTURES

A. General: Admixtures certified by manufacturer to contain not more than 0.1 percent water-soluble chloride ions by mass of cement and to be compatible with other admixtures.

B. Air-Entraining Admixture: ASTM C 260.

2.05 CURING MATERIALS

A. Absorptive Cover: AASHTO M 182, Class 2, burlap cloth made from jute or kenaf, weighing approximately 9 oz./sq. yd. (305 g/sq. m) dry.

B. Moisture-Retaining Cover: ASTM C 171, polyethylene film or white burlap-polyethylene sheet.

C. Water: Potable.

D. Evaporation Retarder: Waterborne, monomolecular film forming, manufactured for application to fresh concrete.

E. Clear Solvent-Borne Liquid-Membrane-Forming Curing Compound: ASTM C 309, Type 1, Class B.

F. Available Products: Subject to compliance with requirements, products that may be incorporated into the Work include, but are not limited to, the following:

1. Evaporation Retarder:
   a. Cimfilm; Axim Concrete Technologies.
   b. Finishing Aid Concentrate; Burke Group, LLC (The).
   c. Spray-Film; ChemMasters.
   d. Aquafilm; Conspec Marketing & Manufacturing Co., Inc.
   e. Sure Film; Dayton Superior Corporation.
   f. Eucobar; Euclid Chemical Co.
   g. Vapor Aid; Kaufman Products, Inc.
   h. Lambco Skin; Lambert Corporation.
   i. E-Con; L&M Construction Chemicals, Inc.
   j. Confilm; Master Builders, Inc.
   k. Waterhold; Metalcrete Industries.
   l. Rich Film; Richmond Screw Anchor Co.
   m. SikaFilm; Sika Corporation.
   n. Finishing Aid; Symons Corporation.
   o. Certi-Vex EnvioAssist; Vexcon Chemicals, Inc.

2. Clear Solvent-Borne Liquid-Membrane-Forming Curing Compound:
   a. AH Curing Compound #2 DR; Anti-Hydro International, Inc.
   b. Res-X Cure All Resin; Burke Group, LLC (The).
   c. RX Cure; Conspec Marketing & Manufacturing Co., Inc.
   d. Day-Chem Rez Cure; Dayton Superior Corporation.
   e. Kurez DR; Euclid Chemical Co.
   f. Nitocure S; Fosroc.
   g. #64 Resin Cure; Lambert Corporation.
   h. L&M Cure DR; L&M Construction Chemicals, Inc.
   i. 3100-Clear; W. R. Meadows, Inc.
   j. Seal N Kure FDR; Metalcrete Industries.
   k. Rich Cure; Richmond Screw Anchor Co.
   l. Resi-Chem C309; Symons Corporation.
   m. Horncure 30; Tamms Industries Co., Div. of LaPorte Construction Chemicals North America, Inc.
   n. Uni Res 150; Unitex.
   o. Certi-Vex RC; Vexcon Chemicals, Inc.

2.06 RELATED MATERIALS

A. Expansion- and Isolation-Joint-Filler Strips: ASTM D 1751, asphalt-saturated cellulosic fiber.

B. Expansion- and Isolation-Joint-Filler Strips: ASTM D 1752, cork or self-expanding cork.

C. Expansion- and Isolation-Joint-Filler Strips: ASTM D 1751, asphalt-saturated cellulosic fiber, or ASTM D 1752, cork or self-expanding cork.

D. Bonding Agent: ASTM C 1059, Type II, non-redispersible, acrylic emulsion or styrene butadiene.

E. Epoxy Bonding Adhesive: ASTM C 881, two-component epoxy resin, capable of humid curing and bonding to damp surfaces, of class and grade to suit requirements, and as follows:

1. Type II, non-load bearing, for bonding freshly mixed concrete to hardened concrete.
2. Types I and II, non-load bearing, for bonding hardened or freshly mixed concrete to hardened concrete.
3. Types IV and V, load bearing, for bonding hardened or freshly mixed concrete to hardened concrete.

F. Available Products: Subject to compliance with requirements.

2.07 CONCRETE MIXES

A. Prepare design mixes, proportioned according to ACI 211.1 and ACI 301, for each type and strength of normal-weight concrete determined by either laboratory trial mixes or field experience.

B. Owner will hire a qualified independent testing agency for preparing and reporting proposed mix designs for the trial batch method.

C. Proportion mixes to provide concrete with the following properties:
1. Compressive Strength (28 Days): 3500 psi (24.1 MPa).
2. Maximum Water-Cementitious Materials Ratio: 0.50.
3. Slump Limit: 4 inches (100 mm).

D. Cementitious Materials: Limit percentage, by weight, of cementitious materials other than Portland cement in concrete as follows:

1. Fly Ash: 20 percent.
2. Combined Fly Ash and Pozzolan: 20 percent.

E. Add air-entraining admixture at manufacturer's prescribed rate to result in concrete at point of placement having an air content of 2.5 to 4.5 percent.

F. Add air-entraining admixture at manufacturer's prescribed rate to result in concrete at point of placement having an air content as follows within a tolerance of plus or minus 1.5 percent:

1. Air Content: 5.5 percent for 1-1/2-inch (38-mm) maximum aggregate.
2. Air Content: 6.0 percent for 1-inch (25-mm) maximum aggregate.
3. Air Content: 6.0 percent for 3/4-inch (19-mm) maximum aggregate.

2.08 CONCRETE MIXING

A. Ready-Mixed Concrete: Comply with requirements and with ASTM C 94.

PART 3 - EXECUTION

3.01 PREPARATION

A. Proof-roll prepared sub-base surface to check for unstable areas and verify need for additional compaction. Proceed with pavement only after nonconforming conditions have been corrected and subgrade is ready to receive pavement.

B. Remove loose material from compacted sub-base surface immediately before placing concrete.

3.02 EDGE FORMS AND SCREED CONSTRUCTION

A. Set, brace, and secure edge forms, bulkheads, and intermediate screed guides for pavement to required lines, grades, and elevations. Install forms to allow continuous progress of work and so forms can remain in place at least 24 hours after concrete placement.

B. Clean forms after each use and coat with form release agent to ensure separation from concrete without damage.

3.03 STEEL REINFORCEMENT

A. General: Comply with CRSI's "Manual of Standard Practice" for fabricating reinforcement and with recommendations in CRSI's "Placing Reinforcing Bars" for placing and supporting reinforcement.

1. Apply epoxy repair coating to uncoated or damaged surfaces of epoxy-coated reinforcement.

B. Clean reinforcement of loose rust and mill scale, earth, ice, or other bond-reducing materials.

C. Arrange, space, and securely tie bars and bar supports to hold reinforcement in position during concrete placement. Maintain minimum cover to reinforcement.

D. Install fabricated bar mats in lengths as long as practicable. Handle units to keep them flat and free of distortions. Straighten bends, kinks, and other irregularities, or replace units as required before placement. Set mats for a minimum 2-inch (50-mm) overlap to adjacent mats.

3.04 JOINTS

A. General: Construct construction, isolation, and contraction joints and tool edgings true to line with faces perpendicular to surface plane of concrete. Construct transverse joints at right angles to centerline, unless otherwise indicated.
1. When joining existing pavement, place transverse joints to align with previously placed joints, unless otherwise indicated.

B. Construction Joints: Set construction joints at side and end terminations of pavement and at locations where pavement operations are stopped for more than one-half hour, unless pavement terminates at isolation joints.

1. Provide preformed galvanized steel or plastic keyway-section forms or bulkhead forms with keys, unless otherwise indicated. Embed keys at least 1-1/2 inches (38 mm) into concrete.
2. Continue reinforcement across construction joints, unless otherwise indicated. Do not continue reinforcement through sides of pavement strips, unless otherwise indicated.
3. Provide tie bars at sides of pavement strips where indicated.
4. Use a bonding agent at locations where fresh concrete is placed against hardened or partially hardened concrete surfaces.

5. Use epoxy bonding adhesive at locations where fresh concrete is placed against hardened or partially hardened concrete surfaces.

C. Isolation Joints: Form isolation joints of preformed joint-filler strips abutting concrete curbs, catch basins, manholes, inlets, structures, walks, other fixed objects, and where indicated.

1. Locate expansion joints at intervals of 50 feet (15.25 m), unless otherwise indicated.
2. Extend joint fillers full width and depth of joint.
3. Terminate joint filler less than 1/2 inch (12 mm) or more than 1 inch (25 mm) below finished surface if joint sealant is indicated, or as suggested by manufacturer.
4. Place top of joint filler flush with finished concrete surface if joint sealant is not indicated.
5. Furnish joint fillers in one-piece lengths. Where more than one length is required, lace or clip joint-filler sections together.
6. Protect top edge of joint filler during concrete placement with metal, plastic, or other temporary preformed cap. Remove protective cap after concrete has been placed on both sides of joint.

D. Install dowel bars and support assemblies at joints where indicated. Lubricate or asphalt-coat one-half of dowel length to prevent concrete bonding to one side of joint.

E. Contraction Joints: Form weakened-plane contraction joints, sectioning concrete into areas as indicated. Construct contraction joints for a depth equal to at least one-fourth of the concrete thickness, as follows:

1. Grooved Joints: Form contraction joints after initial floating by grooving and finishing each edge of joint with groover tool to the following radius. Repeat grooving of contraction joints after applying surface finishes. Eliminate groover marks on concrete surfaces.

   a. Radius: 1/4 inch (6 mm).

2. Sawed Joints: Form contraction joints with power saws equipped with shatterproof abrasive or diamond-rimmed blades. Cut 1/8-inch- (3-mm-) wide joints into concrete when cutting action will not tear, abrade, or otherwise damage surface and before developing random contraction cracks.

F. Edging: Tool edges of pavement, gutters, curbs, and joints in concrete after initial floating with an edging tool to the following radius. Repeat tooling of edges after applying surface finishes. Eliminate tool marks on concrete surfaces.

1. Radius: 1/4 inch (6 mm).

3.05 CONCRETE PLACEMENT

A. Inspection: Before placing concrete, inspect and complete formwork installation, reinforcement steel, and items to be embedded or cast in. Notify other trades to permit installation of their work.

B. Remove snow, ice, or frost from sub-base surface and reinforcement before placing concrete. Do not place concrete on frozen surfaces.

C. Moisten sub-base to provide a uniform dampened condition at the time concrete is placed. Do not place concrete around manholes or other structures until they are at the required finish elevation and alignment.

D. Comply with requirements and with recommendations in ACI 304R for measuring, mixing, transporting, and placing concrete.

E. Do not add water to concrete during delivery, at Project site, or during placement.

F. Deposit and spread concrete in a continuous operation between transverse joints. Do not push or drag concrete into place or use vibrators to move concrete into place.

G. Consolidate concrete by mechanical vibrating equipment supplemented by hand-spading, rodding, or tamping. Use equipment and procedures to consolidate concrete according to recommendations in ACI 309R.
   1. Consolidate concrete along face of forms and adjacent to transverse joints with an internal vibrator. Keep vibrator away from joint assemblies, reinforcement, or side forms. Use only square-faced shovels for hand-spreading and consolidation. Consolidate with care to prevent dislocating reinforcement, dowels, and joint devices.

H. Place concrete in two operations; strike off initial pour for entire width of placement and to the required depth below finish surface. Lay welded wire fabric or fabricated bar mats immediately in final position. Place top layer of concrete, strike off, and screed.
   1. Remove and replace portions of bottom layer of concrete that have been placed more than 15 minutes without being covered by top layer, or use bonding agent if approved by Architect.

I. Screed pavement surfaces with a straightedge and strike off. Commence initial floating using bull floats or darbies to form an open textured and uniform surface plane before excess moisture or bleed water appears on the surface. Do not further disturb concrete surfaces before beginning finishing operations or spreading dry-shake surface treatments.

J. Curbs and Gutters: When automatic machine placement is used for curb and gutter placement, submit revised mix design and laboratory test results that meet or exceed requirements. Produce curbs and gutters to required cross section, lines, grades, finish, and jointing as specified for formed concrete. If results are not approved, remove and replace with formed concrete.

K. Slip-Form Pavers: When automatic machine placement is used for pavement, submit revised mix design and laboratory test results that meet or exceed requirements. Produce pavement to required thickness, lines, grades, finish, and jointing as required for formed pavement.
   1. Compact sub-base and prepare subgrade of sufficient width to prevent displacement of paver machine during operations.

L. When adjoining pavement lanes are placed in separate pours, do not operate equipment on concrete until pavement has attained 85 percent of its 28-day compressive strength.

M. Cold-Weather Placement: Comply with ACI 306.1 and as follows. Protect concrete work from physical damage or reduced strength that could be caused by frost, freezing actions, or low temperatures.
   1. When air temperature has fallen to or is expected to fall below 40 deg F (4.4 deg C), uniformly heat water and aggregates before mixing to obtain a concrete mixture temperature

of not less than 50 deg F (10 deg C) and not more than 80 deg F (27 deg C) at point of placement.
2. Do not use frozen materials or materials containing ice or snow.
3. Do not use calcium chloride, salt, or other materials containing antifreeze agents or chemical accelerators, unless otherwise specified and approved in mix designs.

N. Hot-Weather Placement: Place concrete according to recommendations in ACI 305R and as follows when hot-weather conditions exist:
1. Cool ingredients before mixing to maintain concrete temperature at time of placement below 90 deg F (32 deg C). Chilled mixing water or chopped ice may be used to control temperature, provided water equivalent of ice is calculated to total amount of mixing water. Using liquid nitrogen to cool concrete is Contractor's option.
2. Cover reinforcement steel with water-soaked burlap so steel temperature will not exceed ambient air temperature immediately before embedding in concrete.
3. Fog-spray forms, reinforcement steel, and subgrade just before placing concrete. Keep subgrade moisture uniform without standing water, soft spots, or dry areas.

3.06 CONCRETE FINISHING

A. General: Wetting of concrete surfaces during screeding, initial floating, or finishing operations is prohibited.

B. Float Finish: Begin the second floating operation when bleed-water sheen has disappeared and the concrete surface has stiffened sufficiently to permit operations. Float surface with power-driven floats, or by hand floating if area is small or inaccessible to power units. Finish surfaces to true planes. Cut down high spots, and fill low spots. Re-float surface immediately to uniform granular texture.
1. Medium-to-Coarse-Textured Broom Finish: Provide a coarse finish by striating float-finished concrete surface 1/16 to 1/8 inch (1.6 to 3 mm) deep with a stiff-bristled broom, perpendicular to line of traffic.

3.07 SPECIAL FINISHES

3.08 CONCRETE PROTECTION AND CURING

A. General: Protect freshly placed concrete from premature drying and excessive cold or hot temperatures. Comply with ACI 306.1 for cold-weather protection and follow recommendations in ACI 305R for hot-weather protection during curing.

B. Evaporation Retarder: Apply evaporation retarder to concrete surfaces if hot, dry, or windy conditions cause moisture loss approaching 0.2 lb/sq. ft. x h (1 kg/sq. m x h) before and during finishing operations. Apply according to manufacturer's written instructions after placing, screeding, and bull floating or darbying concrete, but before float finishing.

C. Begin curing after finishing concrete, but not before free water has disappeared from concrete surface.

D. Curing Methods: Cure concrete by moisture curing, moisture-retaining-cover curing, curing compound, or a combination of these as follows:
1. Moisture Curing: Keep surfaces continuously moist for not less than seven days with the following materials:

a. Water.
b. Continuous water-fog spray.
c. Absorptive cover, water saturated, and kept continuously wet. Cover concrete surfaces and edges with 12-inch (300-mm) lap over adjacent absorptive covers.

2. Moisture-Retaining-Cover Curing: Cover concrete surfaces with moisture-retaining cover for curing concrete, placed in widest practicable width, with sides and ends lapped at least 12 inches (300 mm), and sealed by waterproof tape or adhesive. Immediately repair any holes or tears during curing period using cover material and waterproof tape.
3. Curing Compound: Apply uniformly in continuous operation by power spray or roller according to manufacturer's written instructions. Recoat areas subjected to heavy rainfall within three hours after initial application. Maintain continuity of coating and repair damage during curing period.

3.09 FIELD QUALITY CONTROL

A. Testing Agency: Owner will engage a qualified independent testing and inspection agency to sample materials, perform tests, and submit test reports during concrete placement according to requirements specified in this Article.

B. Testing Services: Testing shall be performed according to the following requirements:
1. Sampling Fresh Concrete: Representative samples of fresh concrete shall be obtained according to ASTM C 172, except modified for slump to comply with ASTM C 94.
2. Slump: ASTM C 143; one test at point of placement for each compressive-strength test, but not less than one test for each day's pour of each type of concrete. Additional tests will be required when concrete consistency changes.
3. Air Content: ASTM C 231, pressure method; one test for each compressive-strength test, but not less than one test for each day's pour of each type of air-entrained concrete.
4. Concrete Temperature: ASTM C 1064; one test hourly when air temperature is 40 deg F (4.4 deg C) and below and when 80 deg F (27 deg C) and above, and one test for each set of compressive-strength specimens.
5. Compression Test Specimens: ASTM C 31/C 31M; one set of four standard cylinders for each compressive-strength test, unless otherwise indicated. Cylinders shall be molded and stored for laboratory-cured test specimens unless field-cured test specimens are required.
6. Compressive-Strength Tests: ASTM C 39; one set for each day's pour of each concrete class exceeding 5 cu. yd. (4 cu. m), but less than 25 cu. yd. (19 cu. m), plus one set for each additional 50 cu. yd. (38 cu. m). One specimen shall be tested at 7 days and two specimens at 28 days; one specimen shall be retained in reserve for later testing if required.
7. When frequency of testing will provide fewer than five compressive-strength tests for a given class of concrete, testing shall be conducted from at least five randomly selected batches or from each batch if fewer than five are used.
8. When total quantity of a given class of concrete is less than 50 cu. yd. (38 cu. m), Architect may waive compressive-strength testing if adequate evidence of satisfactory strength is provided.
9. When strength of field-cured cylinders is less than 85 percent of companion laboratory-cured cylinders, current operations shall be evaluated and corrective procedures shall be provided for protecting and curing in-place concrete.
10. Strength level of concrete will be considered satisfactory if averages of sets of three consecutive compressive-strength test results equal or exceed specified compressive strength

and no individual compressive-strength test result falls below specified compressive strength by more than 500 psi (3.4 MPa).

C. Test results shall be reported in writing to Architect, Concrete Manufacturer, and Contractor within 24 hours of testing. Reports of compressive-strength tests shall contain Project identification name and number, date of concrete placement, name of concrete testing agency, concrete type and class, location of concrete batch in pavement, design compressive strength at 28 days, concrete mix proportions and materials, compressive breaking strength, and type of break for both 7- and 28-day tests.

D. Nondestructive Testing: Impact hammer, sonoscope, or other nondestructive device may be permitted by Architect but will not be used as the sole basis for approval or rejection.

E. Additional Tests: Testing agency shall make additional tests of the concrete when test results indicate slump, air entrainment, concrete strengths, or other requirements have not been met, as directed by Architect. Testing agency may conduct tests to determine adequacy of concrete by cored cylinders complying with ASTM C 42, or by other methods as directed.

3.010 REPAIRS AND PROTECTION

A. Remove and replace concrete that is broken, damaged, or defective, or does not meet requirements in this Section.

B. Drill test cores where directed by Architect when necessary to determine magnitude of cracks or defective areas. Fill drilled core holes in satisfactory areas with Portland cement concrete bonded to with epoxy adhesive.

END OF SECTION

SECTION 02764
PAVEMENT JOINT SEALANTS

PART 1 - GENERAL

1.01 RELATED DOCUMENTS

A. Drawings and general provisions of the Contract, including General and Supplementary Conditions and Division 1 Specification Sections, apply to this Section.

1.02 SUMMARY

A. This Section includes the following:

1. Expansion and contraction joints within Portland cement concrete pavement.
2. Joints between Portland cement concrete and asphalt pavement.

B. Related Sections include the following:

1. Division 2 Section "Hot-Mix Asphalt Paving" for constructing joints between concrete and asphalt pavement.
2. Division 2 Section “Cement Concrete “for constructing joints in concrete paving.
3. Division 7 Section "Joint Sealants" for sealing non-traffic and traffic joints in locations not specified in this Section.

1.03 SUBMITTALS

A. Product Data: For each joint-sealant product indicated.

1.04 QUALITY ASSURANCE

A. Installer Qualifications: An experienced installer who has specialized in installing joint sealants similar in material, design, and extent to those indicated for this Project and whose work has resulted in joint-sealant installations with a record of successful in-service performance.

B. Source Limitations: Obtain each type of joint sealant through one source from a single manufacturer.

1.05 DELIVERY, STORAGE, AND HANDLING

A. Deliver materials to Project site in original unopened containers or bundles with labels indicating manufacturer, product name and designation, color, expiration date, pot life, curing time, and mixing instructions for multi-component materials.

B. Store and handle materials to comply with manufacturer's written instructions to prevent their deterioration or damage due to moisture, high or low temperatures, contaminants, or other causes.

1.06 PROJECT CONDITIONS

A. Environmental Limitations: Do not proceed with installation of joint sealants under the following conditions:

1. When ambient and substrate temperature conditions are outside limits permitted by joint sealant manufacturer.

2. When ambient and substrate temperature conditions are outside limits permitted by joint sealant manufacturer or are below 40 deg F (4.4 deg C).
3. When joint substrates are wet.

B. Joint-Width Conditions: Do not proceed with installation of joint sealants where joint widths are less than that allowed by joint sealant manufacturer for application indicated.

C. Joint-Substrate Conditions: Do not proceed with installation of joint sealants until contaminants capable of interfering with their adhesion are removed from joint substrates.

PART 2 - PRODUCTS

2.01 MATERIALS, GENERAL

A. Compatibility: Provide joint sealants, backing materials, and other related materials that are compatible with one another and with joint substrates under conditions of service and application, as demonstrated by joint sealant manufacturer based on testing and field experience.

B. Colors of Exposed Joint Sealants: Match Architect's samples.

C. Colors of Exposed Joint Sealants: As indicated by referencing manufacturer's designations.

D. Colors of Exposed Joint Sealants: As selected by Architect from manufacturer's full range for this characteristic.

2.02 COLD-APPLIED JOINT SEALANTS

A. Type NS Silicone Sealant for Concrete: Single-component, low-modulus, neutral-curing, non-sag silicone sealant complying with ASTM D 5893 for Type NS.

B. Type SL Silicone Sealant for Concrete and Asphalt: Single-component, low-modulus, neutral-curing, self-leveling silicone sealant complying with ASTM D 5893 for Type SL.

C. Multi-component Low-Modulus Sealant for Concrete and Asphalt: Proprietary formulation consisting of reactive petropolymer and activator components producing a pourable, self-leveling sealant.

D. Available Products: Subject to compliance with requirements, cold-applied joint sealants that may be incorporated into the Work include, but are not limited to, the following:

1. Type NS Silicone Sealant for Concrete:
   a. Roadsaver Silicone-SL; Crafco Inc.
   b. 888; Dow Corning.
2. Type SL Silicone Sealant for Concrete and Asphalt:
   a. 890-SL; Dow Corning.
3. Multi-component Low-Modulus Sealant for Concrete and Asphalt:
   a. SOF-SEAL; W.R. Meadows, Inc.

2.03 HOT-APPLIED JOINT SEALANTS

A. Elastomeric Sealant for Concrete: Single-component formulation complying with ASTM D 3406.

B. Sealant for Concrete and Asphalt: Single-component formulation complying with ASTM D 3405.

C. Available Products: Subject to compliance with requirements, hot-applied joint sealants that may be incorporated into the Work include, but are not limited to, the following:

1. Elastomeric Sealant for Concrete:
   a. Superseal 444/777; Crafco, Inc.
   b. POLY-JET 3406; W.R. Meadows, Inc.
2. Sealant for Concrete and Asphalt:
   a. ROADSAVER 221; Crafco Inc.
   b. Product #9005; Koch Materials Company.
   c. Product #9030; Koch Materials Company.
   d. SEALTIGHT HI-SPEC; W.R. Meadows, Inc.

2.04 JOINT-SEALANT BACKER MATERIALS

A. General: Provide joint-sealant backer materials that are non-staining; are compatible with joint substrates, sealants, primers, and other joint fillers; and are approved for applications indicated by joint sealant manufacturer based on field experience and laboratory testing.

B. Round Backer Rod for Cold- and Hot-Applied Sealants: ASTM D 5249, Type 1, of diameter and density required to control sealant depths and prevent bottom-side adhesion of sealant.

C. Backer Strips for Cold- and Hot-Applied Sealants: ASTM D 5249; Type 2; of thickness and width required to control sealant depths, prevent bottom-side adhesion of sealant, and fill remainder of joint opening under sealant.

2.05 PRIMERS

A. Primers: Product recommended by joint sealant manufacturer where required for adhesion of sealant to joint substrates indicated, as determined from preconstruction joint- sealant-substrate tests and field tests.

PART 3 - EXECUTION

3.01 EXAMINATION

A. Examine joints indicated to receive joint sealants, with Installer present, for compliance with requirements for joint configuration, installation tolerances, and other conditions affecting joint-sealant performance.

B. Proceed with installation only after unsatisfactory conditions have been corrected.

3.02 PREPARATION

A. Surface Cleaning of Joints: Clean out joints immediately before installing joint sealants to comply with joint sealant manufacturer's written instructions.

B. Joint Priming: Prime joint substrates where indicated or where recommended in writing by joint sealant manufacturer, based on preconstruction joint-sealant-substrate tests or prior experience. Apply primer to comply with joint sealant manufacturer's written instructions. Confine primers to areas of joint-sealant bond; do not allow spillage or migration onto adjoining surfaces.

3.03 INSTALLATION OF JOINT SEALANTS

A. General: Comply with joint sealant manufacturer's written installation instructions applicable to products and applications indicated, unless more stringent requirements apply.

B. Sealant Installation Standard: Comply with recommendations of ASTM C 1193 for use of joint sealants as applicable to materials, applications, and conditions indicated.

C. Install backer materials of type indicated to support sealants during application and at position required to produce cross-sectional shapes and depths of installed sealants relative to joint widths that allow optimum sealant movement capability.
   1. Do not leave gaps between ends of backer materials.
   2. Do not stretch, twist, puncture, or tear backer materials.
   3. Remove absorbent backer materials that have become wet before sealant application and replace them with dry materials.

D. Install sealants by proven techniques to comply with the following and at the same time backings are installed:
   1. Place sealants so they directly contact and fully wet joint substrates.
   2. Completely fill recesses provided for each joint configuration.
   3. Produce uniform, cross-sectional shapes and depths relative to joint widths that allow optimum sealant movement capability.

E. Tooling of Non-sag Sealants: Immediately after sealant application and before skinning or curing begins, tool sealants according to requirements specified below to form smooth, uniform beads of configuration indicated; to eliminate air pockets; and to ensure contact and adhesion of sealant with sides of joint.
   1. Remove excess sealants from surfaces adjacent to joint.
   2. Use tooling agents that are approved in writing by joint sealant manufacturer and that do not discolor sealants or adjacent surfaces.

F. Provide joint configuration to comply with joint sealant manufacturer's written instructions, unless otherwise indicated.

G. Provide recessed joint configuration for silicone sealants of recess depth and at locations indicated.

3.04 CLEANING

A. Clean off excess sealants or sealant smears adjacent to joints as the Work progresses by methods and with cleaning materials approved by manufacturers of joint sealants and of products in which joints occur.

3.05 PROTECTION

A. Protect joint sealants during and after curing period from contact with contaminating substances and from damage resulting from construction operations or other causes so sealants are without deterioration or damage at time of Substantial Completion. If, despite such protection, damage or deterioration occurs, cut out and remove damaged or deteriorated joint sealants immediately so installations with repaired areas are indistinguishable from the original work.

END OF SECTION

SECTION 02780
DETECTABLE WARNING PAVERS

PART 1 - GENERAL

1.01 DESCRIPTION

A. Provide detectable warning pavers as shown on drawings.

1.02 SHOP DRAWINGS

A. Submit for approval, product literature and color selection samples.

PART 2 - PRODUCTS

2.01 MATERIALS

A. Detectable Warning Pavers: Color and pattern as selected by Architect. The stone materials shall conform to the following specifications:
   1. Pavers made from a “no slump” concrete mix, under extreme pressure and high frequency vibrations.
   2. Pavers to have a compressive strength greater than 8000 psi, a water absorption maximum of 5% and will not exceed ASTM C-936 and freeze-thaw testing per Section 8 of ASTM C-67.
   3. Pavers available in 3 7/8” x 7 13/16” x 2 3/8” with truncated domes. Weight per piece = 6.25 lbs.

B. Washed Sand.

PART 3 – EXECUTION

3.01 INSTALLATION

A. Excavate unsuitable, unstable or unconsolidated subgrade material and compact the area which is to receive the pave stones. Backfill, place and level the excavated area with a 4 inch minimum of a compacted structural base material.

B. Place bedding course of washed sand conforming to the grading requirements of ASTM C-33 to a uniform depth of 1 ½” screeded to the grade and profile required.

C. Install the ADA Compliant Detectable Warning Paver with joints approximately 1/8”.

D. Where required, cut pave stones with an approved cutting device to fit accurately, neatly, and without damaged edges.

E. Tamp pave stones with a plate compactor, uniformly level, true to grade and free of movement.

F. Spread sand to 1/8” thickness over entire paving area.

G. Make one more pass with plate compactor to fill joints with sand.

END OF SECTION

SECTION 02811
LANDSCAPE IRRIGATION

PART 1 - GENERAL

1.01 SUMMARY

A. Provide and install irrigation system including the following:
   1. PVC pipe and fittings.
   2. Wiring and controller.
   3. Drip irrigation tubing and devices.
   4. Section valves and quick coupler valves.
   5. Spray heads and nozzles.

1.02 SUBMITTAL

A. Irrigation license documentation: Person supervising work must possess an irrigator's license issued by TCEQ.

1.03 RELATED SECTIONS

A. Landscape Grading: Section 02923.

B. Sodding: Section 02925.

C. Exterior Plants: Section 02930

1.04 QUALITY ASSURANCE

A. Comply with governing codes and regulations. Provide products as shown or approved equals from acceptable manufacturers.

B. Perform irrigation work under the supervision of a licensed irrigator.

PART 2 - PRODUCTS

2.01 MATERIALS

A. Irrigation pipe: Use polyvinyl chloride (PVC) pipe meeting ASTM D2241, SDR 13.5, SDR 17, SDR 21 or ASTM D 1785, Schedule 40, unless otherwise shown on the plans.

B. Fittings. Furnish fittings as necessary to complete the system.

C. Sleeves: Use PVC pipe meeting ASTM D 1785, Schedule 40, with and inside diameter at least 1 inch larger than the outside diameter of the irrigation pipe.

D. Backflow prevention device: Furnish a backflow prevention device at the connection to a potable water supply, compatible to the line sizes shown on the plans and which meet the requirements of the controlling water authority.

E. Accessories: Use valves, sprinkler heads, controllers, and other irrigation devices and materials

that meet the requirements shown on the plans.

F. Electrical Service: Use qualified personnel to furnish electrical service as required for the electrical devices of the system. Ensure that all governing codes and standards for building and electrical work are met.

G. Furnish an irrigation system that meets the following specification:
   1. Standard Specification: See Item 170, "Irrigation System," of the Standard Specifications for Construction and Maintenance of Highways, Streets, and Bridges (2004).

PART 3 - EXECUTION

3.01 INSTALLATION

A. Excavation and trenching: Provide and install irrigation:
   1. Excavate and trench to a depth sufficient to provide for a minimum of 12 inches of soil cover for all lines.
   2. Ensure that trenches are straight, clean, and free of debris or sharp objects.
   3. Snake pipe in trench to allow for expansion and contraction, and continuously support pipe in bottom of trench.
   4. Use common trenches for irrigation wire runs and pipe, where feasible.
   5. Protect all open bore pits and trenches for safety purposes.

B. Pipe and valve assembly: Assemble pipe and fittings as recommended by the manufacturers.
   1. Clean pipe of dirt and moisture before assembly.
   2. Do not use solvent weld in temperatures below 40 degrees Fahrenheit.
   3. Connect plastic pipe to metal valves with threaded fittings and plastic adapters.
   4. Seal pipe ends with tape if not immediately connected.
   5. Place valves in accessible locations, or as directed by the Engineer.

C. Sprinkle heads: Install sprinkle heads in accordance with manufacturer's recommendations at locations shown on the plans.
   1. Use nozzles as shown on the plans.
   2. Adjust sprays to avoid spraying all paved surfaces, walls, fences, and buildings.
   3. Attach spray heads and quick couplers to irrigation lines with leak proof swing joints or flex pipe.

D. Drip irrigation: Install drip irrigation tubing according to the plans.
   1. Flush tubing prior to connection.
   2. Seal open ends with tape if not immediately connected.
   3. Secure tubing on top of vegetation barrier with U-shaped staples at intervals of 3 feet..
   4. Seal pipe ends with tape if not immediately connected.
   5. Cover installed tubing with loose aggregate as shown in the plans.

E. Hydrostatic testing: Prior to acceptance, test the entire system for leaks and proper functioning to the satisfaction of the Engineer.
   1. Center load pipe with sufficient back fill to prevent arching or slipping while under pressure.
   2. After all welded joints have cured for at least 24 hours, test the main lines from the meter to the valves, with all valves closed, for at least 2 consecutive hours by applying a continuous and static minimum 80-psi water pressure.
   3. Repair all leaks and retest. Before final approval, maintain the lines under static pressure for

24 hours without leaks.

4. Do not cover pipe joints and connections until pressure testing has been inspected and approved by the Engineer.

F. Backfill and compaction. Backfill all trenches after tests have been approved and the system is operational.
   1. Backfill in 8 inch layers with clean soil, free of sharp rock or other objectionable material.
   2. Remove excavated rock from surface of grade.
   3. Compact soil and add fill as necessary to limit settling and attain a smooth finished grade.

G. Monitoring: Ensure proper performance and function of the system.
   1. Set controller to distribute proper amounts of water for healthy growth of plants.
   2. Repair as necessary until accepted.
   3. Secure tubing on top of vegetation barrier with U-shaped staples at intervals of 3 feet..
   4. Seal pipe ends with tape if not immediately connected.
   5. Cover installed tubing with loose aggregate as shown in the plans.

3.02 FINAL ACCEPTANCE

A. Submit the following to the Engineer prior to final acceptance:
   1. As-built drawings: after installation is complete, showing exact valves and trench locations dimensioned from permanent elements. Drawings must be accurate and legible.
   2. Furnish 3 quick couple keys with swivel hose connectors.
   3. Provide written instructions on the use of the controller and irrigation devices.
   4. Provide written instructions for year around system maintenance and seasonal controller settings.

B. Clean area and remove debris from irrigation installation.

END OF SECTION

SECTION 02831
CHAIN LINK FENCES AND GATES

PART 1 - GENERAL

1.01 SCOPE OF THE WORK

A. The work shall include, but not be limited to the following:
   1. Furnishing and installing all fencing required; including all erection accessories, fittings and fastenings utilizing the material and methods contained herein.
   2. All material and labor shall be in strict accordance with all applicable provisions of this specification and the drawings included herein.

1.02 SUBMITTALS

A. Submit Manufacturer's literature and letters attesting that the products used meet or exceed these specifications. Comply with the provisions of Section 01340.

B. Shop drawings shall be submitted for approval indicating proper size, type and location of all fencing materials, as shown on the drawings or as specified herein. Drawings shall indicate connection and attachment data, showing post and bracing locations, location of gates, etc., such that the full scope of fencing requirements is fully illustrated or identified.

1.03 QUALITY ASSURANCE

A. Manufacturer, Supplier and Contractor shall be firms of long term operation, technically proficient and experience in this trade.

B. Applicable Standards and Specifications:
   1. ASTM A392 Standard Specifications for Zinc-Coated Steel Chain Link Fence Fabric Galvanized After Weaving, Class I (1.2 oz. Per sq. Ft. minimum) or ASTM A-491 (0.40 oz/sf).
   2. ASTM A-120, Standard Specification for Hot Dipped Zinc-Coated (Galvanized) Welded and Seamless Steel Pipe for pipe posts and pipe. Provide 1.8 oz. per sq. Ft. for all pipe and posts.
   3. ASTM A-153 Standard Specifications for post caps, stretcher bars, and misc. Fittings.
   4. ASTM A-121 Standard Specifications for Tension Wire, Barbed Wire, Class III (0.80 oz/sf).
   5. Federal Specification RR-FS-191G, for Weights and Tolerances.

1.04 CONTRACTOR'S INSPECTION

A. The fencing contractor shall review the existing conditions and coordinate with the responsible Contractor to assure correct preparation.

B. Fencing Contractor will report any and all problems to the General Contractor and to the Architect.

C. Proceeding with installation of fencing materials will be construed as evidence of acceptance of conditions under which fencing work will be done.

1.05 PRODUCT HANDLING, STORAGE AND DELIVERY

A. Store material to protect from damage and the elements.

B. Fencing materials shall be stored upon supports, off the ground, and be covered with a weather tight covering.

C. Store connectors in a waterproof structure.

1.06 JOB CONDITIONS

A. Handle fencing items to avoid injury of persons and to avoid damage to materials or to work in place. Satisfactory repair or remove to replace work that has been damaged.

B. Provide temporary flooring, bracing, shoring, rails, guards, covers and barricades as necessary to prevent damage or injury.

C. Secure partially erected framing during interruptions in erecting. Remove ladders and ramps when fencing work is not in progress.

PART 2 - MATERIALS

2.01 GENERAL

A. Finished dimension of all fencing shall be as shown on the drawings, or as specified herein.

Standard Fabric Height: 6ft.
Fence provided with three strands of barbed wire as specified herein.

B. Weights and tolerances to conform to Federal Specification RR-F-191G.

2.02 FENCING MATERIALS

A. Line Posts: Line posts shall conform to the standard specification for black and Hot Dipped Zinc-Coated (Galvanized) Welded and Seamless Steel Pipe for Ordinary Uses, ASTM Designation A-123, Schedule 40. Line posts shall have an outside diameter of 2-1/2" and a weight of not less than 3.65 pounds per lineal foot. These posts shall not be splice welded in such that the weld appears above the grade line. The embedment length is 30" for line posts.

B. Corner, Pull, and End Posts: These posts shall conform to Standard Specification for Black and Hot Dipped Zinc-Coated (Galvanized) Welded and Seamless Steel Pipe for Ordinary Uses, ASTM Designation A-123. Posts shall have an outside diameter of 3" and weight of not less than 5.79 pounds per lineal foot. These posts shall not be splice welded in such a manner that the weld appears above the grade line. The embedment length is 48" for these posts.

C. Top Rail: Top rail shall meet the same specifications or quality as line and terminal posts and shall conform to ASTM A-123 for galvanizing. The top rails shall have an outside diameter of 1-5/8" and weight 2.27 pounds per lineal foot, and be supplied in lengths not to exceed 18". An outside sleeve-type coupling, measuring not less than 6" in length with a wall thickness of not less than 0.70", shall be provided at each interval of 18". The coupling shall be designed to allow for expansion movement of top rail.

D. Bottom Tension Wire: Bottom edge tension wire shall be 7 gauge high carbon steel wire furnished for the bottom edge of fabric for all new fencing.

E. Trussed Bracing: The end, pull, or corner post shall be strengthened and reinforced by braces meeting the same specifications of quality as line and terminal posts. Braces shall be installed midway between top rail and ground and extend from each terminal post to the first adjacent post. Braces shall be 1.625" O.D. pipe and Securely fastened to posts by heavy pressed steel connections and also be trussed from line posts back to terminal posts with 3/8" round galvanized truss rod complete with turnbuckle tightening unit.

F. Chain Link Fabric: Fabric shall be No. 9 gauge, 2" mesh, with a minimum tensile strength of 80,000 psi, conforming to Standard Specification for Zinc-Coated Steel Chain Link Fence Fabric Galvanized after Weaving, Class I, ASTM Designation A-392. Top and bottom edge of fabric shall be twisted and barbed. Fabric shall be free from barbs, icicles or other projections resulting from the galvanizing process, and any fabric not free thereof will be rejected even through erected. Bottom of fence fabric shall be 1" plus or minus 1/2" above finished grade.

G. Fabric ties: Chain link fabric shall be tied to the top rail and bottom tension wire at 18 inch intervals with No. 9 gauge soft annealed steel tie wire. The same tie wire shall fasten the fabric to the posts at 15 inch intervals.

H. Barbed Wire: Where scheduled or shown on the drains, all barbed wire at fence top shall be 3 strands of 12.5 gauge with barbs, twisted, galvanized wire. Barb points shall be spaced approximately 5" o.c.

I. Barbed Wire Support Arms: Barbed wire support arms shall be installed on all fencing to receive barbed wire. Arms will be long enough to carry three strands of barbed wire attached by clips, swing out at a 45-degree angle and shall have sufficient strength to withstand 200 lbs. Bending strength from top strand of wire. All items to be hot-dipped galvanized.

J. Stretcher Bars: Stretcher bars shall be not less than 3/16" by 3/4" flat and not more than 2" shorter than the fabric height. Provide one stretcher bar for each end post and two stretcher bars for each corner and pull post. Attach stretcher bars to terminal posts with 1" x 1/8" flat steel bands with 3/8" carriage bolts at intervals not exceeding 15 inches.

K. Gate Posts: These posts shall conform to Standard Specification for Black and Hot Dipped Zinc-Coated (Galvanized) Welded and Seamless Steel Pipe for Ordinary Uses, ASTM Designation A-123. Gate posts for gates in excess of 6' in width but not less than 20' in width shall have an outside diameter of 4" and weight of not less than 9.11 pounds per lineal foot. These posts shall not be splice welded in such a manner that the weld appears above the grade line. The embedment length is 48" for gate posts.

L. Gates: Sliding gates shall be sized and located as detailed on drawings. Frames shall be constructed of pipe conforming to Standard Specifications for Black and Hot Dipped Zinc-Coated (Galvanized) Welded and Seamless Steel Pipe for Ordinary Uses, ASTM Designation A-123, Having an outside diameter of 1.9" and weighing 2.72#/ft. Gate frames shall also be entirely electrically welded and hot dipped galvanized.

1. Diagonal Bracing: Gates shall also have a horizontal brace of 1.9" and shall be doubled trussed with 3/8" truss rod.
2. Fabric: Fabric shall be the same as specified (9 gauge), But shall have knuckle finish all around. Fabric shall be installed by means of tension bars and hook bolts.
3. Frames: Frames shall be equipped with welded on 3/8" diameter galvanized adjustable truss rods.
4. Corner & Tee: Fittings of malleable iron or pressed steel having means for attaching diagonal bracing members.
5. Hinges, Latches, & Catches: Hinges shall be galvanized, malleable iron and shall be of adequate strength to support the gate and have large bearing surfaces for clamping into position. Under no condition of use or abuse shall the hinges twist or turn under the action of the gate. Gates shall be

capable of being opened and closed quickly and easily by one (1) person. Hinges, latches and catches shall be one of the Manufacturers standard designs as selected and approved by the Architect. All items shall be approved by Architect. All gates are to receive locks and shall be equipped with latches capable of receiving brass padlocks.

6. Center Rest: A malleable iron center rest designated to receive the plunger rod, to be anchored at least 12 inches into a 12" dia. x 24" deep concrete footing, shall be provided for all double leaf gates.
7. End Frame: End framing members of the gate leaf shall extend approx. 12" above top horizontal member. Three (3) uniformly spaced strands of barbed wire shall be attached by use of clips.

M. Terminal and Gate Post Fittings: Terminal and gate post fittings and caps, including tension bands brace connections and top rail connections, shall be No. 9 gauge, hot dipped, galvanized, cold rolled carbon steel, designed to exclude moisture. No aluminum, cast iron or pot metal fittings will be accepted as equals or substitutes.

PART 3 - EXECUTION

3.01 GENERAL INSTALLATION

A. Demolition: On the state's property and at the new fence, the Contractor shall clear an unobstructive area of 4' of the State's property line. The Contractor shall coordinate fence installation with the State.

B. Clearing and Grading: The Contractor shall do all clearing of brush, rocks and debris which may be necessary for the installation of fencing.

C. Stake Corners: The State will stake out the locations for corner posts and terminal posts in this installation. The fencing panels between corner and terminal posts shall generally follow the finished ground elevations. The Contractor shall grade off irregularities necessary to limit the variation of grade under the bottom of the fence to a distance no greater than 6" or less than 2".

D. Pull Post Spacing: Pull post shall be located not more than 500 feet apart and at each change in direction exceeding 20 degrees. Runs of fence over 500 feet but less than 1000 feet shall have a pull post centered in the run.

E. Post Holes: Holes for concrete footings for all posts shall be drilled to the dimensions listed below:
1. Typical line post: 10" diameter, 30" deep (24" post embedment)
2. Corner, end, or pull post: 12" diameter, 48" deep (42" post embedment)
3. Gate post: 32" diameter, 48" deep (42" post embedment)

Where solid rock is encountered without an overburden of soil, line posts shall be set in a minimum depth of 12", and corner, gate, and pull posts a minimum of 18" into the solid rock. The hole shall have a minimum width of 1" greater than the largest diameter of the post section to be set.

Where solid rock is covered by an overburden of soil or loose rock, the posts shall be set to the full depth described above unless the penetration into solid rock reaches the minimum depths specified above, in which case, the depth of penetration may be terminated. Concrete footings shall be constructed from the solid rock to the top of the ground. Grouting will be required on the portion of the post in solid rock.

After the post is set and plumbed, the hole shall be filled with grout consisting of one pat Portland cement and three parts clean, well-graded sand. Other grouting materials may be used if approved or specified by the State. The grout shall be thoroughly worked into the hole so as to leave no voids. The grout shall be crowned to carry water from the post.

Excavated material from footings shall be spread neatly and uniformly to leave the area adjacent to the fence as slightly as possible.

F. Concrete for Footings: Concrete for footings shall be a 1:2:4 mix or as required to produce a 28-day compressive strength of not less than 2500 psi or a 7-day beam strength of 330 psi. An approved concrete accelerator may be used to produce an earlier high ultimate strength and shorten curing time. All concrete footings shall be poured up to finished grade and crowned 1" to shed water. Excess concrete not used in the footings and any other construction debris will be removed from the site.

G. Fabric Erection: The fence fabric shall be placed by securing one end and applying sufficient tension to the other end to remove all slack before marking attachments. The fabric shall be cut and each span shall be attached independently at all corner posts and pull posts.

Fastening to terminal, pull, and corner posts shall be with stretcher bars which shall be secure to the posts with stretcher bar bands at intervals not exceeding 15 inches.

The finished fence shall be plumb, taut, true to line and complete in every detail. All work shall be done by experienced workmen.

H. Electrical Grounds: Grounding rods shall be at least 5/8" diameter by 8' long “copper weld” rods driven or drilled into the soil so that the top of the rod is approximately 6" below grade. A No. 6 solid copper conductor shall be clamped to the ground rod and to the bottom tension wire of the fence with cast bronze or stainless steel bolts and washers. Each 1000' of fence shall be provided with a ground located near the center of the run. At least one electrical ground shall be installed for each fenced enclosure.

3.02 WARRANTY AND GUARANTEE

The Fencing Contractor shall be required to provide a written guarantee of his work against defective materials or workmanship for a period of on (1) year from date of facility acceptance by Owner.

3.03 NOTE: INTERMEDIATE RAILS

A. Intermediate rails shall not be required between line posts on 6' high fencing, but shall be required at corners and gates as specified.

B. Provide continuous intermediate rails between line posts on 8' high fencing, as well as corners and gates.

C. Intermediate rails shall be placed on the inside or non-public side of mesh.

END OF SECTION

SECTION 02832
ORNAMENTAL STEEL FENCE AND GATE

PART 1 - GENERAL

1.01 SECTION INCLUDES:

The contractor shall provide all labor, materials, and appurtenances necessary for installation of the industrial ornamental steel fence system..

1.02 RELATED WORK

A. Section 02200 - Earthwork
B. Section 03831 - ChaninLink Fences and Gates
C. Section 03300 - Concrete

1.03 SYSTEM DESCRIPTION

The manufacturer shall supply a total industrial ornamental steel fence system. The system shall include all components (i.e., pickets, rails, posts, gates and hardware) required.

1.04 QUALITY ASSURANCE

The contractor shall provide laborers and supervisors who are thoroughly familiar with the type of construction involved and materials and techniques specified.

1.05 REFERENCES

A. *ASTM A653/A653M* - Standard Specification for Steel Sheet, Zinc-Coated (Galvanized) or Zinc-Iron Alloy Coated (Galvannealed) by the Hot Dip Process
B. *ASTM A924/A924M* - Standard Specification for General Requirements for Steel Sheet, Metallic-Coated by the Hot Dip Process
C. *ASTM A1011/A1011M* - Standard Specification for Steel, Sheet and Strip, Hot-Rolled, Carbon, Structural, High-Strength and High-Strength Low-Alloy with Improved Formability
D. *ASTM B117* - Practice for Operating Salt Spray (Fog) Apparatus
E. *ASTM D523* - Test Method for Specular Gloss
F. *ASTM D822* - Practice For Conducting Tests On Paint and Related Coatings and Materials Using Filtered Open-Flame Carbon-Arc Light and Water Exposure Apparatus
G. *ASTM D1654* - Test Method for Evaluation of Painted or Coated Specimens Subjected to Corrosive Environments
H. *ASTM D2244* - Test Method for Calculation of Color Differences From Instrumentally Measured Color Coordinates
I. *ASTM D2794* - Test Method for Resistance of Organic Coatings to The Effects of Rapid Deformation (Impact)
J. *ASTM D3359* - Test Method for Measuring Adhesion by Tape Test

1.06 SUBMITTAL

The manufacturer's literature and Shop Drawings shall be submitted prior to installation.

1.07 PRODUCT HANDLING AND STORAGE

A. Upon receipt at the job site, all materials shall be checked to ensure that no damage occurred during shipping or handling.

B. Materials shall be stored in such a manner to ensure proper ventilation and drainage, and to protect against damage, weather, vandalism, and theft.

PART 2 - MATERIALS

2.01 MANUFACTURER

A. The industrial ornamental steel fence system shall conform to Ameristar® Aegis II™, Classic™ 3-Rail style manufactured by Ameristar Fence Products, Inc., in Tulsa, Oklahoma or approved equal.

2.02 MATERIAL

A. Steel material for fence framework (i.e., tubular pickets, rails, and posts), when galvanized after forming, shall conform to the requirements of ASTM A1011/1011M, with a minimum yield strength of 50,000 psi (344 MPa). The exterior shall hot-dip galvanized with a 0.45 oz/ft^2 (138 g/m^2) minimum zinc weight. The interior surface shall be coated with a minimum 81% nominal zinc pigmented coating, 0.3 mils (0.0076mm) minimum thickness.

B. Steel material for fence framework (i.e., tubular pickets, rails, and posts), when galvanized prior to forming, shall conform to the requirements of ASTM A924/924M, with a minimum yield strength of 50,000 psi (344 MPa). The steel shall be hot-dip galvanized to meet the requirements of ASTM A653/A653M with a minimum zinc coating weight of 0.90 oz/ft^2 (276 g/m^2), Coating Designation G-90.

C. The manufactured galvanized framework shall be subjected to the PermaCoat® thermal stratification coating process (high-temperature, in-line, multi-stage, multi-layer) including, as a minimum, a six-stage pretreatment/wash (with zinc phosphate), an electrostatic spray application of an epoxy base, and a separate electrostatic spray application of a polyester finish. The base coat shall be a zinc-rich thermosetting epoxy powder coating (gray in color) with a minimum thickness of 2 mils (0.0508mm). The topcoat shall be a "no-mar" TGIC polyester powder coat finish with a minimum thickness of 2 mils (0.0508mm). The color shall be black. The stratification-coated framework shall be capable of meeting the performance requirements for each quality characteristic shown in Table 1.

Quality Characteristics	ASTM Test Method	Performance Requirements
Adhesion	D3359 – Method	Adhesion (Retention of Coating) over 90% of test area (Tape and

	B	knife test).
Corrosion Resistance	B117 & D1654	Corrosion Resistance over 3,500 hours (Scribed per D1654; failure mode is accumulation of 1/8" coating loss from scribe or medium #8 blisters).
Impact Resistance	D2794	Impact Resistance over 60 inch lb. (Forward impact using 0.625" ball).
Weathering Resistance	D822, D2244, D523 (60° Method)	Weathering Resistance over 1,000 hours (Failure mode is 60% loss of gloss or color variance of more than 3 delta-E color units).

Table 1 – Coating Performance Requirements

D. Material for fence pickets shall be 1" square x 14ga. tubing. The cross-sectional shape of the rails shall conform to the manufacturer's design with outside cross-section dimensions of 1.75" square and a minimum thickness of 14ga. Picket holes in the rail shall be spaced 4.98" o.c. Picket retaining rods shall be 0.125" diameter galvanized steel. Posts shall be a minimum of 2-1/2" square x 12ga. High quality PVC grommets shall be supplied to seal all picket-to-rail intersections.

2.03 FABRICATION

A. Pickets, rails, and posts shall be precut to specified lengths. Rails shall be pre-punched to accept pickets.

B. Grommets shall be inserted into the pre-punched holes in the rails and pickets shall be inserted through the grommets so that pre-drilled picket holes align with the internal upper raceway of rails. (Note: This can best be accomplished by using an alignment template.) Retaining rods shall be inserted into each rail so that they pass through the predrilled holes in each picket, thus completing the panel assembly.

C. Completed panels shall be capable of supporting a 600 lb. load (applied at midspan) without permanent deformation. Panels without rings shall be biasable to a 25% change in grade; panels with rings shall be biasable to a 12.5% change in grade.

D. Gates shall be fabricated using panel material and gate ends having the same outside cross-section dimensions as the rail. All rail and upright intersections shall be joined by welding. All picket and rail intersections shall also be joined either by welding or by the same retaining rod process used for panel assembly.

PART 3 - EXECUTION

3.01 PREPARATION

All new installation shall be laid out by the contractor in accordance with the construction plans.

3.02 INSTALLATION

Fence posts shall be set in accordance with the spacings shown in Table 2, plus or minus 1/2",

depending on the nominal span specified.

Span	6’ Nominal (67-3/4" Rail)				8’ Nominal (92-5/8" Rail)			
Post Size	2-1/2"	3"	2-1/2"	3"	2-1/2"	3"	2-1/2"	3"
Bracket Type	Standard (BB301)		Angle (BB304)		Standard (BB301)		Angle (BB304)	
Post Settings ± ½ O.C.	71-1/2"	72"	73"	73-1/2"	96"	96-1/2"	97-1/2"	98"

Table 2 – Post Spacing Requirements

Gate posts shall be spaced according to the gate openings specified in the construction plans. The "Earthwork" and "Concrete" sections of this specification shall govern post base material requirements. Panels shall be attached to posts using mechanically fastened panel brackets supplied by the manufacturer.

3.03 CLEANING

The contractor shall clean the jobsite of excess materials; post-hole excavations shall be scattered uniformly away from posts.

END OF SECTION

SECTION 02923
LANDSCAPE GRADING

PART 1 - GENERAL

1.01 SUMMARY

A. Provide fine grading and topsoil for installation of sod and seeding:

1.02 SUBMITTAL

A. Sample: Submit a one quart sample of topsoil.

B. Source: Submit source of topsoil for Engineer's approval.

1.03 RELATED SECTIONS

A. Landscape Irrigation: Section 02811.

B. Seeding and Soil Supplements: Section 2924

C. Sodding: Section 02925.

D. Exterior Plants: Section 02930.

1.04 QUALITY ASSURANCE

A. Use experienced installers. Deliver and stockpile material as directed by the Engineer.

1.04 PROJECT CONDITIONS

A. Environmental limitations: Do not apply topsoil if material or area is excessively wet.

PART 2 - PRODUCTS

2.01 MATERIALS

A. Topsoil:
   1. Furnish friable, fertile, topsoil loam that is free of excess rock, gravel, sticks, litter, and objectionable material, and is able to support plant growth.
   2. Ensure that the topsoil has a pH of 5.5 to 8.5. Topsoil is subject to testing by Engineer.
   3. Furnish compost that has been produced by aerobic (biological) decomposition of organic matter and meets all of the following specifications: Compost: Furnish compost that has been produced by aerobic (biological) decomposition of organic matter and meets the following specification:
   4. Standard Specification: See Item 161, "Compost," of the Standard Specifications for Construction and Maintenance of Highways, Streets, and Bridges (2004).

PART 3 - EXECUTION

3.01 INSTALLATION

A. Sod areas: Prepare sod areas, where shown on the plans, as follows:
   1. Furnish topsoil as necessary to ensure a minimum depth of 6 inches of topsoil.
   2. Remove surface rock or other objectionable material as needed to provide proper depth.
   3. Till in a 1 inch layer of compost into the topsoil to a minimum depth of 4 inches.
   4. Set final grade of soil 1 inch below the surface elevation of sidewalks and curbs.
   5. Final grade at building slab must be at least 10 inches below the floor elevation of buildings.
   6. Direct runoff away from the buildings.
   7. Fine grade the area to achieve proper drainage and a smooth even grade.

B. Seed areas: Prepare remaining bare or disturbed areas to receive seed as follows:
   1. Ensure that seeding areas have a minimum depth of 4 inches of topsoil.
      a. Add soil as needed to achieve required depth.
      b. Feather the soil back to meet existing grade in undisturbed areas.
   2. Follow grade elevations as shown on the plans.

3.02 ACCEPTANCE

A. Ensure that the final grade is smooth and true to proposed grade lines and drainage patterns, and is free of lumps, bumps, dips, depressions, inconsistent grades, or undesirable changes in elevation

B. Clean areas and remove soil from pavement and restore any previous topsoil stockpile areas.

END OF SECTION

SECTION 02924
SEEDING AND SOIL SUPPLEMENTS

PART 1 - GENERAL

1.01 SUMMARY

A. Provide and install seed and soil supplements:
   1. Grass seed.
   2. Organic fertilizer.
   3. Cellulose fiber mulch.

1.02 SUBMITTAL

A. Seed documentation: Submit documentation for tests for pure live seed meeting the requirements of the Texas Seed Law.

B. Fertilizer documentation: Submit documentation showing chemical analysis, product source, and components for organic fertilizer.

1.03 RELATED SECTIONS

A. Landscape Irrigation: Section 02811.

B. Landscape Grading: Section 02923.

C. Sodding: Section 02925.

D. Exterior Plants: Section 02930.

1.04 QUALITY ASSURANCE

A. Provide grass seed from previous season's crop meeting the requirements of the Texas Seed Law, including the testing and labeling for pure live seed (PLS = Purity X Germination).

B. Furnish seed of the designated species, in labeled unopened bags or containers to the Engineer before planting.

C. Use seed within 12 months from the date of the analysis.

D. Deliver, handle, and store materials in accordance with manufacturer's instructions.

PART 2 - PRODUCTS

2.01 MATERIALS

A. Organic fertilizer: Furnish a complete non-chemical, organic fertilizer containing nutrients, humates, amino acids, and beneficial micro organisms. (Microlife "Ultimate" 8-4-6, as manufactured by San Jacinto Environmental Supplies, Houston, Texas, or an approved equal.)

B. Grass seed: Apply the following grass seed at the rates shown, according to the time of year,

unless otherwise directed by the Engineer.

1. Temporary Cool Season Seeding (apply from September 1 to November 30)

Tall Fescue	20 lbs. PLS/acre
Oats	24 lbs. PLS/acre
Wheat	34 lbs. PLS/acre

2. Permanent Warm Season Seeding (apply from February 1 to May 15)

Green Sprangletop	3 lbs. PLS/acre
Common Bermuda	10 lbs. PLS/acre
Sideoats Grama (Haskell)	2 lbs. PLS/acre
Buffalo Grass (Texoka)	5 lbs. PLS/acre
Little Bluestem (native)	2 lbs. PLS/acre

3. Rye grass seed will not be allowed.
4. Use Buffalo grass seed that has been treated with KNO_3 (potassium nitrate) to overcome dormancy.

C. Cellulose fiber mulch: Use cellulose fiber mulch, only. Paper mulch will not be allowed.

PART 3 - EXECUTION

3.01 INSTALLATION

A. As directed by the Engineer, distribute seed to all disturbed, sparse, or bare ground areas that are not shown to receive sod, pavement, or other surface treatments in the plans.
   1. Prior to seeding, apply organic fertilizer at a rate of 400 lbs. per acre.
   2. Cultivate areas 4 inches deep before seeding, unless otherwise directed by the Engineer.
   3. If permanent seeding is to be placed over temporary seeding, mow the temporary growth before cultivation and permanent seed placement.
   4. Distribute the seed mixture uniformly over the areas using the following methods:
      a. Apply seed by hand, mechanical distribution, or hydro-seeding.
      b. When seed and water are to be distributed together during hydro-seeding, apply the water/seed mixture to the area within 30 minutes of placing the seed in the equipment.
   5. Roll the seeded area with a light roller or other suitable equipment. Roll sloped areas parallel to the contour of the slopes.

B. Apply cellulose fiber mulch uniformly over the seeded area at the rate of 2000 lbs. per acre immediately after planting the seed mixture. (Cellulose fiber mulch rates are based on dry weight of mulch per acre.)
   1. Apply the water and cellulose fiber mulch slurry uniformly over the seeded area using suitable equipment.
   2. Lightly apply water as needed to keep seeded areas moist until seed germinates.
   3. Avoid over watering and erosion.
   4. For 2 to 4 weeks following seed germination, adjust routine watering to provide deeper soaking to encourage root growth.
   5. For the remainder of the turf establishment period, ensure that the newly seeded areas receive approximately 1 inch of water per week, as directed by the Engineer. Watering may need to be increased or decreased due to natural precipitation, evaporation rates, and other climatic factors.
   6. Re-apply seed to eroded or sparse areas as needed to attain coverage. Continue to provide water to seeded areas until growth is accepted by Engineer.

7. Maintain all turf areas as directed by the Engineer until proper coverage is achieved to the satisfaction of the Engineer.

END OF SECTION

SECTION 02925
SODDING

PART 1 - GENERAL

1.01 SUMMARY

A. Provide and install sod according to the plans:
   1. Grass sod.
   2. Organic fertilizer application.

1.02 SUBMITTAL

A. Sod documentation: Submit documentation obtained from the supplier showing type of sod, if requested by the Engineer.

B. Fertilizer documentation: Submit documentation showing chemical analysis, product source, and components for organic fertilizer.

C. Pesticide and herbicide applicators license: Submit documentation for license of personal to handle and apply pesticides and specialized chemicals in accordance with TDA or TSPCB laws and regulations.

1.03 RELATED SECTIONS

A. Landscape Irrigation: Section 02811.

B. Landscape Grading: Section 02923.

C. Seeding and Soil Supplements: Section 02924.

D. Exterior Plants: Section 02930.

1.04 QUALITY ASSURANCE

A. Install sod within 72 hours from the time of harvesting.

B. Do not harvest from areas where the grass is thinned out, damaged, or where sod has been contaminated by other grass species, weeds, insects, larvae, pathogens, or disease.

1.04 PROJECT CONDITIONS

A. Do not plant sod in freezing weather.

B. Plant the sod between the average date of the last freeze in the spring, and 6 weeks prior to the average date for the first freeze in the fall, according to the Texas Almanac for the project area.

PART 2 - PRODUCTS

2.01 MATERIALS

A. Grass Sod: Furnish live, healthy grass sod of the type specified on the plans.
   1. Provide sod that has been mowed, cut into manageable blocks or rolls, and neatly stack on pallets for shipment.
   2. Furnish sod that has dense matted roots throughout the soil of the sod for a minimum thickness of 1 inch.
   3. Keep sod moist from the time it is harvested until it is planted. Discard grass sod that has dried roots, dried soil, desiccated foliage, or discolored foliage.

B. Organic fertilizer: Furnish a complete non-chemical, organic fertilizer containing nutrients, humates, amino acids, and beneficial micro organisms. (Microlife "Ultimate" 8-4-6, as manufactured by San Jacinto Environmental Supplies, Houston, Texas, or an approved equal.)

PART 3 - EXECUTION

3.01 INSTALLATION

A. Surface preparation: Prepare areas to receive sod according to the plans and Section 02923, "Landscape Grading."
   1. Prior to installation of sod, ensure that all existing vegetation is removed from sod area manually or by using a non-residual chemical treatment, according to manufacturer's directions, as approved by the Engineer, and in accordance with TDA or TSPCB laws and regulations.
   2. Remove dead vegetation, sticks, visible roots, debris, stones, and clods from sod area. Lightly till topsoil surface to break up surface compaction and rake smooth.

B. Sod installation:
   1. Place sod blocks or rolls in straight lines. Lay sod tightly, edge to edge, with no overlaps or visible gaps.
   2. Stagger side seams in a running bond pattern.
   3. Cut sod neatly to fit snug along edges of beds, sidewalk, curbs, structures, and other elements in the sod area.
   4. Place sod flush or slightly lower than the elevation of adjacent sidewalks to allow runoff from these surfaces.
   5. Lightly compress sod into place to remove voids and to ensure a continuous, solid contact with the ground by using a water-filled, drum type, lawn roller or other approved methods.
   6. Ensure that the final grade of the sod is smooth and free of visible humps, lumps, dips, or gaps.

C. Watering and protection:
   1. Apply a top dressing of organic fertilizer at a rate of 20 lbs. per 1000 sq. ft and water the sod thoroughly after installation.
   2. Keep sod area wet for the following 3 to 5 days, depending on weather, temperature, and humidity.
   3. Adjust watering schedule to distribute the proper amount of water that will promote healthy grass growth in consideration of the weather factors.
   4. Use signs, flagging, barrier tape, or other methods approved by the Engineer, to protect newly installed and saturated sod. Repair any damages to sod or grade as they occur and return topsoil and sod surface to a smooth finished grade.

END OF SECTION

SECTION 02930
EXTERIOR PLANTS

PART 1 - GENERAL

1.01 SUMMARY

A. Provide plants and bed construction, according to the plans, including the following:
   1. Plant material.
   2. Soil mix consisting of the following:
      a. 75% Topsoil.
      b. 25% Compost.
   3. Organic fertilizer .
   4. Landscape mulch.
   5. Loose aggregate groundcover.
   6. Steel edging.
   7. Vegetation barrier fabric.
   8. Decorative limestone boulders.

1.02 SUBMITTALS

A. Samples:
   1. Submit a one-quart sample of loose aggregate groundcover material for Engineer's approval.
   2. Submit a one-quart sample of landscape mulch for Engineer's approval.
   3. Submit a one-quart sample of planting soil mix for Engineer's approval.

B. Pesticide and herbicide applicators license: Submit documentation for license of personal to handle and apply pesticides and specialized chemicals in accordance with TDA or TSPCB laws and regulations.

C. Fertilizer documentation: Submit documentation showing chemical analysis, product source, and components for organic fertilizer.

1.03 RELATED SECTIONS

A. Landscape Irrigation: Section 02811.

B. Landscape Grading: Section 02923.

C. Seeding and Soil Supplements: Section 02924.

D. Sodding: Section 02925.

1.04 QUALITY ASSURANCE

A. Follow the manufacturer's instructions for handling and applying pesticides and specialized chemicals in accordance with TDA or TSPCB laws and regulations using properly licensed personnel.

B. Provide compost that meet the following standards:

1. All applicable 40 CFR 503 standards for Class A biosolids and TCEQ health and safety regulations as defined in the TAC, Chapter 332, including the time and temperature standards in Subchapter B, Part 23.
2. The United States Composting Council (USCC) Seal of Testing Assurance (STA) program.

C. Plant materials must comply with the latest standards of the following:
1. "American Standard for Nursery Stock," published by the American Association of Nurserymen, Inc.
2. "Standardized Plant Names," published by the American Joint Committee on Horticultural Nomenclature.

1.04 PROJECT CONDITIONS

A. Do not plant in freezing weather.

B. Do not plant or prepare beds in wet conditions, or when soil mix materials or bed area is saturated.

PART 2 - PRODUCTS

2.01 MATERIALS

A. Plant materials: Furnish vigorous, healthy, well-rooted, nursery-grown plants with well-formed crowns, true to sizes, and with shape and characteristics typical of the species, as described in the plans. Furnish plants that conform to the following specification:
1. Standard Specification: See Item 192, "Landscape Planting," of the Standard Specifications for Construction and Maintenance of Highways, Streets, and Bridges (2004).
2. Provide plants with attached name tags showing the common name as shown on the plan.
3. Transport all plants in enclosed or tarp covered vehicles, protected from damage by wind and exposure.
4. Replace any plants that have been damaged or made visibly unacceptable, in the judgment of the Engineer.

B. Soil Mix: Furnish a planting soil mix that is pre-mixed or mixed on site and consists of 75% topsoil and 25% compost and meets the following requirements:
1. Topsoil: Furnish fertile friable, topsoil that is free of excess rock, gravel, sticks, litter, and objectionable material, is able to support plant growth, and has a pH of 5.5 to 8.0.
2. Compost: Furnish compost that has been produced by aerobic (biological) decomposition of organic matter and meets the following specification:
   a. Standard Specification: See Item 161, "Compost," of the Standard Specifications for Construction and Maintenance of Highways, Streets, and Bridges (2004).

C. Organic fertilizer: Furnish a complete non-chemical, organic fertilizer containing nutrients, humates, amino acids, and beneficial micro organisms. (Microlife "Ultimate" 8-4-6, as manufactured by San Jacinto Environmental Supplies, Houston, Texas, or an approved equal.)

D. Landscape mulch: Furnish commercially manufactured landscape mulch derived from shredded or ground tree bark and small limbs, free of trash, debris, cones, limbs, and excessive amounts of sticks, wood chunks, soil, or other objectionable materials.

E. Loose aggregate groundcover: Furnish commercially crushed stone, ¾ inch in diameter, consisting

of a white and rose colored, hard limestone from the Marble Falls area, "CC Rose Stone" or approved equal. (Cactus Canyon Quarries, 830-693-4331)

F. Steel Edging: Furnish a commercially manufactured steel edging (Ryerson or approved equal) 1/8 inch thick, 4 inches wide, in sections of 16 feet, with tapered steel sleeves for staking, overlapping joint ends, and finished with dark green enamel paint, as shown in the plans.

G. Vegetation barrier fabric: Furnish commercially manufactured vegetation barrier, (Dalen Weed-X, DeWitt Pro-5, or approved equal), that meets the following requirements:
   1. Made from spun or woven polyester.
   2. UV resistant.
   3. Permiable (needle punched).
   4. Heavy duty for professional application.

H. Decorative limestone boulders: Furnish boulders as described in the plans.

PART 3 - EXECUTION

3.01 INSTALLATION

A. Planting bed preparation: Prepare beds as shown in the plans.
   1. Excavate all noxious materials from bed area.
   2. Place soil mix at depths and grade according to the plans.
   3. Add organic fertilizer to bed area prior to tilling at a rate of 30 lbs. per 1000 square feet.
   4. Set final grade of bed areas approximately 3 to 4 inches above final grade of sod.
   5. Slope the bed surface to direct runoff away from building.
   6. Eliminate depressions or high points in beds that may block or prevent surface runoff.
   7. Ensure that the final grade of beds at the edges of building foundations are set at least 10 inches below the finished floor elevation of buildings.
   8. Apply additional soil mix as needed to compensate for settling of bed.

B. Install steel edging as follows:
   1. Before installing, ensure that underground utilities, lines, cables, etc. will not be damaged.
   2. Install only after final grade has been established.
   3. Install in smooth radius curves, only.
   4. Ensure edging is not wavy in its run and sections are not bent, crimped, or rusted.

C. Plant installation: Install plants according to the plans.

D. Vegetation barrier installation:
   1. Rake bed to a smooth surface grade.
   2. Remove surface stones and soil clumps greater than 1 inch.
   3. Place vegetation barrier fabric over soil in bed area and make slits or X cuttings to allow plants to pass through fabric.
   4. Place fabric to cover entire bed and snug around base of plants.
   5. Do not allow any soil to remain on top of fabric.
   6. Secure fabric tight against pavement, slab, and steel edging.
   7. Secure fabric with galvanized wire U shaped staples placed every 3 feet on center.
   8. Overlap seams a minimum of 12 inches and secure with staples.

E. Loose aggregate groundcover installation: Install loose aggregate groundcover as shown in the

plans.

F. Place landscape mulch around existing trees within the sod area to the depth shown in the plans.

G. Incidental construction: Furnish and install boulders all other elements and materials associated with the landscaping as shown on the plans.

3.02 MAINTENANCE

A. Maintain completed portions of the landscape and continue maintenance activities throughout the duration of the project until final acceptance.
   1. Ensure that adequate water is distributed to all plantings for proper growth, but avoid over-watering, ponding, excessive run-off, and waste.
   2. Maintain plants, beds, and turf areas in a neat and presentable condition.
   3. Repair wash-outs, settling, staking, or other damages to the landscaping.
   4. Before final acceptance of the project, replace all dead, unhealthy, or damaged plants to the satisfaction of the Engineer.

END OF SECTION

SECTION 03300
CAST-IN-PLACE CONCRETE

PART 1 - GENERAL

1.01 SUMMARY

A. Provide cast-in-place concrete for general building construction, including, without limitation:
   1. Footings and foundations
   2. Slab on grade.
   3. Requirements (materials, mixes, and finishes) apply to concrete work specified in other sections, such as sidewalk cement concrete.
   4. Concrete aprons
   5. Equipment Pads

1.02 SUBMITTALS

A. Submit for approval shop drawings, product data, mix design proposed for use, mock-ups, and test reports.

1.02 QUALITY ASSURANCE

A. Comply with governing codes and regulations. Provide products of acceptable manufacturers that have been in satisfactory use in similar service for three years. Use experienced installers. Deliver, handle, and store materials in accordance with manufacturer's instructions.

B. Testing: Employ an independent testing agency acceptable to Owner to design concrete mixes and to perform material evaluation tests. Provide 7 and 28 day cylinder tests. Comply with ASTM C 143, C 173, C 31 and C 39.

C. Standards:
   1. ACI 301: Specifications for Structural Concrete for Buildings
   2. ACI 318: Building Code Requirements for Reinforced Concrete, and CRSI Manual of Standard Practice
   3. ACI 308: Standard Practice for Curing Concrete
   4. ACI 347: Guide to Formwork for Concrete.
   5. ACI 304: guide for Measuring, Mixing, Transporting and Placing Concrete

D. Testing: Independent Testing Laboratory

E. Floor Flatness and Levelness Tolerances:
   1. Sub-floors under Materials Such as Concrete Toppings, Ceramic Tile: ACI 302.1R and ASTM E 1155, floor flatness (Ff) of 15, floor levelness (Fl) of 13.
   2. Sub-floors under materials such as Vinyl Tile, Epoxy Toppings, Paint, and Carpet: ACI 302.1R and ASTM E 1155, floor flatness (Ff) of 20, floor levelness (Fl) of 17.

PART 2 - PRODUCTS

2.01 MATERIALS

A. Concrete Design Mixes, ASTM C 94, 28 Day Compressive Strength:
   1. Beams, Walls, Foundations, and Footings: 3000 psi.
   2. Slabs on Grade and Paving Base: 3000 psi.
   3. Exterior Site Concrete and Pads Exposed to Weather: 3000 psi.

B. Formwork: Plywood or metal panel formwork sufficient for structural and visual requirements.
   1. Plastic or paper tubes for cylindrical columns and supports.

C. Reinforcing Materials:
   1. Reinforcing Bars: ASTM A 615, Grade 60, deformed.
   2. Reinforcing Bars: ASTM A 767, Class II, galvanized.
   3. Reinforcing Bars: ASTM A 775, epoxy-coated.
   4. Steel Wire: ASTM A 82.
   5. Steel Wire Fabric: ASTM A 185, welded.
   6. Steel Wire Fabric: ASTM A 497, welded, deformed.

D. Concrete Materials: ASTM C 150, Type I, Portland cement; potable water.
   1. Normal weight aggregates, ASTM C 33.
   2. Fly Ash: ASTM C 618, Type F.

E. Concrete Admixtures: Containing less than 0.1 percent chloride ions.
   1. Air-Entraining Admixture: ASTM C 260, for exterior exposed concrete and foundations exposed to freeze-thaw.
   2. Water-Reducing Admixture: ASTM C 494, Type A, for placement and workability.
   3. High-Range Water-Reducing Admixture, Super Plasticizer: ASTM C 494, Type F or G for placement and workability.
   4. Water-Reducing, Accelerating Admixture: ASTM C 494, Type E for placement and workability.
   5. Water-Reducing, Retarding Admixture: ASTM C 494, Type D for placement and workability.

F. Auxiliary Materials:
   1. Reglets: Galvanized sheet steel reglets, minimum 26 gage (.018 inch).
   2. Water stops: Rubber or PVC water stops.
   3. Vapor Retarder: ASTM E 154 polyethylene sheet, 6 mils.
   4. Vapor Barrier: Pre-molded membrane, ASTM E 96, Method B, 0-vapor transmission rate.
   5. Non-slip Aggregate Finish: Fused aluminum oxide granules or crushed emery.
   6. Liquid Membrane-Forming Curing Compound: ASTM C 309, Type 1, Class A.
   7. Water-Based Acrylic Membrane Curing Compound: ASTM C 309, Type 1, Class B.
   8. Evaporation Control Compound: Monomolecular film-forming compound.
   9. Underlayment Compound: Free-flowing, self-leveling cement-based compound.
   10. Bonding Compound: Polyvinyl acetate or acrylic base.
   11. Epoxy Adhesive: ASTM C 881, two-component material.

G. Concrete Finishes for Formed Surfaces:
   1. Surfaces Not Exposed to View: As-cast form finish.
   2. Surfaces Exposed to View: Smooth form finish.
   3. Surfaces Exposed to View: Smooth rubbed finish.
   4. Surfaces Exposed to View: Grout-cleaned finish.
   5. Surfaces Exposed to View: Special textured form finish.

H. Concrete Finishes for Monolithic Slabs:
   1. Scratch finish for surfaces to receive concrete floor topping or mortar setting bed.
   2. Trowel finish for surfaces to be exposed to view or covered with resilient flooring, carpet, tile, or other thin finish system.
   3. Trowel and fine broom finish for surfaces to receive thin-set ceramic or quarry tile.
   4. Non-slip broom finishes for exterior concrete platforms, steps, and ramps.
   5. Non-slip aggregate finish for ramps and sloped walks.
   6. Exposed aggregate finish, chemical retarder type.

PART 3 - EXECUTION

3.01 INSTALLATION

A. Comply with ASTM C 94. Do not change mix design without approval. Calcium chloride admixtures are not permitted.

B. Chamfer exposed edges/corners to provide straight lines.

C. Tolerance: Plus 1/8" in 10' for grade, alignment, and straightness.

D. Construction Joints: Use keyways, continue reinforcement through joint.

E. Expansion Joints: For exterior works locate 30' o.c. at approved locations. Provide smooth dowels across joint which permit 1" horizontal movement and no vertical shear movement.

F. Isolation Joints: Provide between slabs and vertical elements such as columns and structural walls.

G. Control Joints: Provide sawn or tooled joints or removable insert strips; depth equal to 1/4 slab thickness. Spacing as required and approved.

H. Wall Finishes: As cast and patched for concealed work; rubbed smooth, filled and cement paste coated for exposed work.

I. Slab Finishes: Obtain sample approval before beginning work.
   1. Scratch: For surfaces to receive mortar setting beds or cementitious flooring materials.
   2. Trowel: Hard, smooth, uniform surface for areas to receive resilient flooring, carpet, or other thin finish material.
   3. Broom: After trowel finishing, roughen surface by fine brooming perpendicular to traffic direction for exposed exterior walks, steps and ramps.
   4. Exposed Aggregate: Use chemical retarder, or tamp aggregate into wet concrete and expose by brushing with water. Use where indicated.
   5. Hardener Finish: For exposed interior concrete floors. Dayton Superior Crete Cure Concentrate (J-12) or approved equivalent. Follow manufacturer's directions.

J. Cure and protect work. Report defective work in writing.

3.02 CONCRETE SURFACE REPAIRS

A. Patching Defective Areas: Repair and patch defective areas with cement mortar immediately after removing forms, when acceptable to Architect.

B. Mix dry-pack mortar, consisting of one part Portland cement to 2-1/2 parts fine aggregate passing a No. 16 mesh sieve, using only enough water as required for handling and placing.

C. Cut out honeycombs, rock pockets, voids over 1/4 inch in any dimension, and holes left by tie rods and bolts down to solid concrete but in no case to a depth less than 1 inch. Make edges of cuts perpendicular to the concrete surface. Thoroughly clean, dampen with water, and brush-coat the area to be patched with bonding agent. Place patching mortar before bonding agent has dried.

D. For surfaces exposed to view, blend white Portland cement and standard Portland cement so that, when dry, patching mortar will match surrounding color. Provide test areas at inconspicuous locations to verify mixture and color match before proceeding with patching. Compact mortar in place and strike-off slightly higher than surrounding surface.

E. Repairing Formed Surfaces: Remove and replace concrete having defective surfaces if defects cannot be repaired to satisfaction of Architect. Surface defects include color and texture irregularities, cracks, spalls, air bubbles, honeycomb, rock pockets, fins and other projections on the surface, and stains and other discolorations that cannot be removed by cleaning. Flush out form tie holes and fill with dry-pack mortar or pre-cast cement cone plugs secured in place with bonding agent.

F. Repair concealed formed surfaces, where possible, containing defects that affect the concrete's durability. If defects cannot be repaired, remove and replace the concrete.

G. Repairing Unformed Surfaces: Test unformed surfaces, such as monolithic slabs, for smoothness and verify surface tolerances specified for each surface and finish. Correct low and high areas as specified. Test unformed surfaces sloped to drain for trueness of slope and smoothness by using a template having the required slope.

H. Repair finished unformed surfaces containing defects that affect the concrete's durability. Surface defects include crazing and cracks in excess of 0.01 inch wide or that penetrate to the reinforcement or completely through non-reinforced sections regardless of width, spalling, popouts, honeycombs, rock pockets, and other objectionable conditions.

I. Correct high areas in unformed surfaces by grinding after concrete has cured at least 14 days.

J. Correct low areas in unformed surfaces during or immediately after completing surface finishing operations by cutting out low areas and replacing with patching mortar. Finish repaired areas to blend into adjacent concrete. Proprietary underlayment compounds may be used when acceptable to Architect.

K. Repair defective areas, except random cracks and single holes not exceeding 1 inch in diameter, by cutting out and replacing with fresh concrete. Remove defective areas with clean, square cuts and expose reinforcing steel with at least 3/4-inch clearance all around. Dampen concrete surfaces in contact with patching concrete and apply bonding agent. Mix patching concrete of same materials to provide concrete of same type or class as original concrete. Place, compact, and finish to blend with adjacent finished concrete. Cure in same manner as adjacent concrete.

L. Repair isolated random cracks and single holes 1 inch or less in diameter by dry-pack method. Groove top of cracks and cut out holes to sound concrete and clean of dust, dirt, and loose particles. Dampen cleaned concrete surfaces and apply bonding compound. Place dry-pack before bonding agent has dried. Compact dry-pack mixture in place and finish to match adjacent concrete. Keep patched area continuously moist for at least 72 hours.

M. Perform structural repairs with prior approval of Architect for method and procedure, using specified epoxy adhesive and mortar.

N. Repair methods not specified above may be used, subject to acceptance of Architect.

3.02.1 QUALITY CONTROL TESTING DURING CONSTRUCTION

A. General: The Owner will employ a testing agency to perform tests and to submit test reports.

B. Sampling and testing for quality control during concrete placement may include the following, as directed by Architect.
   1. Sampling Fresh Concrete: ASTM C 172, except modified for slump to comply with ASTM C94.
   2. Slump: ASTM C 143: one test at point of discharge for each day's pour of each type of concrete; additional tests when concrete consistency seems to have changed.
   3. Air Content: ASTM C 173, volumetric method for lightweight or normal weight concrete; ASTM C 231, pressure method for normal weight concrete, one for each day's pour of each type of air-entrained concrete.
   4. Concrete Temperature: ASTM C 1064; one test hourly when air temperature is 40 deg. F (4 deg. C) and below, when 80 deg. F (27 deg. C) and above, and one test for each set of compressive-strength specimens.
   5. Compression Test Specimen: ASTM C 31; one set of four standard cylinders for each compressive-strength test, unless otherwise directed. Mold and store cylinders for laboratory0cured test specimens except when field-cured test specimens are required.
   6. Compressive-Strength Tests: ASTM C 39; one set for each day's pour exceeding 5 cubic yard plus additional sets for each 50 cubic yard more than the first 25 cubic yard of each concrete class placed in any one day; one specimen tested at 7 days, two specimens tested at 28 days, and one specimen retained in reserve for later testing if required.
      a) When frequency of testing will provide fewer than five strength tests for a given class of concrete, conduct testing from at least five randomly selected batches or from each batch if fewer than five are used.
      b) When total quantity of a given class of concrete is less than 50 cubic yards, Architect may waive strength testing if adequate evidence of satisfactory strength is provided.
      c) When strength of field-cured cylinders is less than 85% of companion laboratory-cured

cylinders, evaluate current operations and provide corrective procedures for protecting and curing the in-place concrete.

d) Strength level of concrete will be considered satisfactory if averages of sets of three consecutive strength test results equal or exceed specified compressive strength and no individual strength test result falls below specified compressive strength by more than 500 psi.

C. Test results will be reported in writing to Architect, Structural Engineer, ready-mix producer, and Contractor within 24 hours after tests. Reports of compressive strength tests shall contain the Project identification name and number, date of concrete placement, name of concrete testing service, concrete type and class, location of concrete batch in structure, design compressive strength at 28 days, concrete mix proportions and materials, compressive breaking strength, and type for break for both 7-day tests and 28-day tests.

D. Non-destructive Testing: Impact hammer, sonoscope, or other non-destructive device may be permitted but shall not be used as the sole basis for acceptance or rejection.

E. Additional Tests: The testing agency will make additional tests of in-place concrete when test results indicate specified concrete strengths and other characteristics have not been attained in the structure, as directed by Architect. Testing agency may conduct tests to determine adequacy of concrete by cored cylinders complying with ASTM C 42, or by other method as directed.

END OF SECTION

SECTION 04065

MASONRY MORTAR AND GROUT

PART 1 GENERAL

1.1 SUMMARY

A. Section includes mortar and grout for masonry.

B. Related Sections:
1. Section 04820 - Reinforced Unit Masonry Assemblies: Installation of mortar and grout.
2. Section 08115 - Standard Steel Frames: Grouting steel door frames.

1.2 REFERENCES

A. ASTM International:
1. ASTM C91 - Standard Specification for Masonry Cement.
2. ASTM C94 - Standard Specification for Ready-Mixed Concrete.
3. ASTM C143/C143M - Standard Test Method for Slump of Hydraulic Cement Concrete.
4. ASTM C144 - Standard Specification for Aggregate for Masonry Mortar.
5. ASTM C150 - Standard Specification for Portland Cement.
6. ASTM C199 - Standard Test Method for Pier Test for Refractory Mortars.
7. ASTM C270 - Standard Specification for Mortar for Unit Masonry.
8. ASTM C387 - Standard Specification for Packaged, Dry, Combined Materials for Mortar and Concrete.
9. ASTM C404 - Standard Specification for Aggregates for Masonry Grout.
10. ASTM C476 - Standard Specification for Grout for Masonry.
11. ASTM C595 - Standard Specification for Blended Hydraulic Cements.
12. ASTM C1019 - Standard Test Method for Sampling and Testing Grout.
13. ASTM C1314 - Standard Test Method for Constructing and Testing Masonry Prisms Used to Determine Compliance with Specified Compressive Strength of Masonry.
14. ASTM C1329 - Standard Specification for Mortar Cement.
15. ASTM C1357 - Standard Test Method for Evaluating Masonry Bond Strength.

B. The Masonry Society:
1. TMS MSJC - Building Code for Masonry Structures (ACI 530/ASCE 5/TMS 402), Specification for Masonry Structures (ACI 530.1/ASCE 6/TMS 602) and Commentaries.

1.3 SUBMITTALS

A. Section 01330 - Submittal Procedures: Submittal requirements.

B. Samples: Submit two, 2” cube samples of mortar, illustrating mortar color and color range.

C. Design Data: Submit design mix when Property specification of ASTM C270 is to be used, required environmental conditions, and admixture limitations.

D. Test Reports:
   1. Submit reports on mortar indicating conformance of mortar to property requirements of ASTM C270 and test and evaluation reports to ASTM C780 for aggregate ratio and water content, air content, consistency and compressive strength.
   2. Submit reports on grout indicating conformance of component grout materials to requirements of ASTM C476 and test and evaluation reports to ASTM C1019.

E. Manufacturer's Installation Instructions: Submit premix mortar manufacturer's installation instructions.

F. Material Certificates: Include statements of material properties indicating compliance with requirements including compliance with standards and type designations within standards. Provide for each type and size of the following:
   1. Cementitious materials. Include brand, type, and name of manufacturer.
   2. Preblended, dry mortar mixes. Include description of type and proportions of ingredients.

G. Manufacturer's Certificate: Certify products meet or exceed specified requirements.

1.4 QUALITY ASSURANCE

A. Perform Work in accordance with TMS MSJC Code and TMS MSJC Specification.

B. Maintain one copy of each document on site.

C. Source Limitations for Mortar Materials: Obtain mortar ingredients of a uniform quality, including color for exposed masonry, from a single manufacturer for each cementitious component and from one source or producer for each aggregate.

1.5 DELIVERY, STORAGE, AND HANDLING

A. General: Comply with Section 01400 – Quality Requirements

B. Ordering: Comply with manufacturer’s ordering instructions and lead time requirements to avoid construction delays.

C. Packing, Shipping, Handling and Unloading: Per manufacturer.

D. Delivery: Deliver materials in manufacturer’s original, unopened, undamaged containers with identification labels intact.

E. Storage and Protection: Store materials protected from exposure to harmful weather conditions and at temperature conditions recommended by manufacturer. Store materials in clean, dry, sheltered area, off ground, until used.

F. Store aggregates where grading and other required characteristics can be maintained and contamination avoided.

G. Deliver preblended, dry mortar mix in moisture-resistant containers designed for lifting and emptying into dispensing silo. Store preblended, dry mortar mix in delivery containers on elevated platforms, under cover, and in a dry location or in a metal dispensing silo with weatherproof cover.

H. Store masonry accessories, including metal items, to prevent corrosion and accumulation of dirt and oil.

1.6 ENVIRONMENTAL REQUIREMENTS

A. Section 01600 - Product Requirements.

B. Hot and Cold Weather Requirements: TMS MSJC Specification.

PART 2 PRODUCTS

2.1 MORTAR AND MASONRY GROUT

A. Manufacturers:
1. CTS Cement Manufacturing Co.
2. Lehigh Portland Cement
3. The Quikrete Companies
4. Southern Grouts and Mortars
5. Substitutions: Section 01600 - Product Requirements.

2.2 COMPONENTS

A. Portland Cement: ASTM C 150, Type I or II, except Type III may be used for cold-weather construction. Provide natural color or white cement as required to produce mortar color indicated.

B. Hydrated Lime: ASTM C 207, Type S.

C. Portland Cement-Lime Mix: Packaged blend of portland cement complying with ASTM C 150, Type I or Type III, and hydrated lime complying with ASTM C 207, Type S.

D. Colored Cement Product: Packaged blend made from portland cement and lime and mortar pigments, all complying with specified requirements, and containing no other ingredients.

1. Formulate blend as required to produce color indicated or, if not indicated, as selected from manufacturer's standard colors.
2. Pigments shall not exceed 10 percent of portland cement by weight.
3. Products:
   a. Colored Portland Cement-Lime Mix:
      1) Capital Materials Corporation; Riverton Portland Cement Lime Custom Color.
      2) Holcim (US) Inc.; Rainbow Mortamix Custom Color Cement/Lime.
      3) Lafarge North America Inc.; Eaglebond.
      4) Lehigh Cement Company; Lehigh Custom Color Portland/Lime Cement.

E. Aggregate for Mortar: ASTM C 144.
1. For mortar that is exposed to view, use washed aggregate consisting of natural sand or crushed stone.
2. For joints less than 1/4 inch thick, use aggregate graded with 100 percent passing the No. 16 sieve.

F. Cold-Weather Admixture: Nonchloride, noncorrosive, accelerating admixture complying with ASTM C 494/C 494M, Type C, and recommended by manufacturer for use in masonry mortar of composition indicated.
1. Products:
   a. Euclid Chemical Company (The); Accelguard 80.
   b. Grace Construction Products, a unit of W. R. Grace & Co. - Conn.; Morset.
   c. Sonneborn, Div. of ChemRex; Trimix-NCA.

G. Grout Aggregate: ASTM C404, fine and coarse.

H. Water: Clean and potable.

I. Calcium chloride is not permitted.

2.3 MIXES

A. Mortar Mixes: General: Do not use admixtures, including pigments, air-entraining agents, accelerators, retarders, water-repellent agents, antifreeze compounds, or other admixtures, unless otherwise indicated.
1. Do not use calcium chloride in mortar.
2. Limit cementitious materials in mortar to portland cement and lime.
3. Add cold-weather admixture (if used) at same rate for all mortar that will be exposed to view, regardless of weather conditions, to ensure that mortar color is consistent.

B. Preblended, Dry Mortar Mix: Furnish dry mortar ingredients in form of a preblended mix. Measure quantities by weight to ensure accurate proportions, and thoroughly blend ingredients before delivering to Project site.

C. Mortar for Unit Masonry: Comply with ASTM C 270, Proportion Specification. Provide the following types of mortar for applications stated unless another type is indicated or needed to provide required compressive strength of masonry.
   1. For exterior, above-grade, non-load-bearing walls and for other applications where another type is not indicated, use Type N.

D. Pigmented Mortar: Use colored cement product.

E. Mortar Mixing:
   1. Thoroughly mix mortar ingredients in accordance with ASTM C270 in quantities needed for immediate use.
   2. Achieve uniformly damp sand immediately before mixing process.
   3. Add mortar color and admixtures to achieve uniformity of mix and coloration.
   4. Re-temper only within two hours of mixing.

F. Grout Mixes:
   1. Grout for Non-Structural Masonry: 2,000 psi strength at 28 days; 8-11 inches slump; mixed in accordance with ASTM C476 Fine grout.
   2. Grout for Structural Masonry: 2,500 psi strength at 28 days; 8-11 inches slump; mixed in accordance with ASTM C476 Fine grout.
   3. Application:
      a. Coarse Grout: For grouting spaces with minimum 4 inches dimension in every direction.
      b. Fine Grout: For grouting other spaces.

G. Grout Mixing:
   1. Thoroughly mix grout ingredients in quantities needed for immediate use in accordance with ASTM C476.
   2. Add admixtures; mix uniformly.

PART 3 EXECUTION

3.1 EXAMINATION

A. Section 01300 - Administrative Requirements: Coordination and project conditions.

B. Request inspection of spaces to be grouted.

3.2 PREPARATION

A. Apply bonding agent to existing concrete surfaces.

3.3 INSTALLATION

A. Install mortar and grout in accordance with TMS MSJC Specification.

3.4 FIELD QUALITY CONTROL

A. Section 01400 - Quality Requirements: Testing and Inspection Services 01700 - Execution Requirements: Testing, adjusting, and balancing.

B. Establishing Mortar Mix: In accordance with ASTM C270.

C. Testing of Grout Mix: In accordance with ASTM C1019 for compressive strength, and in accordance with ASTM C143/C143M for slump.

D. Test flexural bond strength of mortar and masonry units to ASTM C1357; test in conjunction with masonry unit sections specified.

E. Test compressive strength of mortar and masonry to ASTM C1314; test in accordance with masonry unit sections specified.

END OF SECTION

SECTION 04090
MASONRY ACCESSORIES

PART 1 – GENERAL

1.01 WORK INCLUDED

A. Airspace maintenance and drainage system for masonry cavities that prevents mortar from making contact with the backup to ensure water management.

1.02 RELATED WORK

A. Section 04100 - Mortar

B. Section 04210 – Stone Masonry

C. Section 04600 – Cast Stone

D. Section 07160 - Bituminous Damp Proofing

1.03 SYSTEM DESCRIPTION

A. Use the Masonry Mat as part of standard masonry cavity wall flashing/weep whole wall drainage systems.

B. The Masonry Mat keeps weep hole vents open and flashing free of mortar droppings and debris by catching and permanently suspending droppings above the level of the top of the weep hole vents, by preventing mortar from forming a continuous barrier against proper water flow to the weeps and by providing routes through the body of the project itself for water to flow to the flashing and weeps.

1.04 SUBMITTALS

A. General: Submit listed submittals in accordance with Conditions of the Contract and Division 1 Submittal Procedures Section.

B. Product Data: Submit product data, including manufacturer's SPEC-DATA product sheet for specified products.

C. Samples: Submit two 6" x 6" selection and verification samples.

D. Quality Assurance Submittals: Submit the following:

1. Certificates: Product certificates signed by manufacturer certifying materials comply with specified performance characteristics and criteria.

2. Manufacturer's Instructions: Manufacturer's Installation Instructions.

E. Closeout Submittals: Submit the following:
   1. Warranty documents.
   2. Section 01400 – Quality Control Procedures
   3. Section 01700 – Execution Requirements

1.05 QUALITY ASSURANCE

A. Drainage material shall not react, oxidize, rot, support mold or fungus, nor react with common building materials including mortar, cement, asphalt, modified bitumen, PVC, copper, steel, or galvanized metal.

B. Material shall not be edible by insects, shall retain its shape and rigidity in and is undamaged by extended exposure to normal field temperatures, and is highly resistant to UV degradation.

1.06 DELIVERY, STORAGE AND HANDLING

A. General: Comply with Section 01400 – Quality Requirements

B. Ordering: Comply with manufacturer's ordering instructions and lead time requirements to avoid construction delays.

C. Packing, Shipping, Handling and Unloading: Per manufacturer.

D. Delivery: Deliver materials in manufacturer's original, unopened, undamaged containers with identification labels intact.

E. Storage and Protection: Store materials protected from exposure to harmful weather conditions and at temperature conditions recommended by manufacturer. Store materials in clean, dry, sheltered area, off ground, until used.

F. Do not expose material to direct sunlight for more than 2 weeks. If material is protected from exposure to direct sunlight it may be stored indefinitely.

1.07 SEQUENCING

A. General: Install the masonry mat product per manufacturer's installation instructions.

1.08 WARRANTY

A. Project Warranty: Refer to Conditions of the Contract for project warranty provisions.

B. Manufacturer's Warranty: Submit, for Owner's acceptance, manufacturer's standard warranty document executed by authorized company official. Manufacturer's warranty is in addition to, and not a limitation of, other rights Owner may have under Contract Documents.

PART 2 – PRODUCTS

2.01 CAVCLEAR MASONRY MAT SYSTEM

A. Manufacturer: CavClear Masonry Mat Contact: P.O. Box 241, Hudson, WI 54016 Telephone: 888) 436-2620 Fax: (715) 381-5773, Website: www.cavclear.com.

2.03 MATERIALS

A. Stone Mat: Cavity Airspace Maintenance and Drainage Material

B. Weep Vents: Nonwoven mesh in the vertical joints of masonry.

C. Available Stone Mat size: 1" thickness by 16" x 96".

D. Available Weep Vents size: 2.5" x 3.5" x 3/8". Color as selected by Architect.

PART 3 – EXECUTION

3.01 MANUFACTURER'S INSTRUCTIONS

A. Compliance: Comply with manufacturer's product data, including product technical bulletins, product catalog installation instructions and product carton instruction for installation.

3.02 EXAMINATION

A. Site Verification of Conditions: Verify substrate conditions, which have been previously installed under other sections, are acceptable for product installation in accordance with manufacturer's instructions. Verify that air space width is at least 1/4" greater than masonry mat thickness.

B. Verify that weeps, wall ties, and reinforcement are properly located.

C. Verify that flashings are properly located and intact.

3.03 PREPARATION

A. Preparation: Clean flashing and weep holes so they are free of mortar droppings and debris immediately prior to installing Masonry Mat.

B. Fill voids in substrate with suitable patching compound; finish flush

C. Remove projecting mortar and other protrusions from substrate.

D. Remove mortar and debris from cavity spaces, wall ties, and reinforcing.

3.04 INSTALLATION

A. Install masonry mat continuously throughout the full-height of exterior masonry cavities during construction of exterior wythe; follow manufacturer's installation instructions.

B. Install horizontally between wall ties, stagger end joints in adjacent rows.

C. Use multiple layers at bottom of wall and above through-wall flashings when air space depth exceeds masonry mat thickness by more than 3/8inch. Extend extra mat at least to top of base flashing.

D. Butt adjacent pieces to moderate contact. Fit to perimeter construction and penetrations without voids.

3.05 PROTECTION

A. Protection: Protect installed product from damage during construction.

END OF SECTION

SECTION 04210
STONE MASONRY

PART 1 – GENERAL

1.01 SUMMARY

A. Section includes cut and rubble stone veneer at exterior walls; metal anchors and accessories; mortar and masonry flashing.

B. Related Sections:
1. Section 04090 - Masonry Accessories
2. Section 04100 - Mortar: Bedding and pointing mortar.
3. Section 04600 – Cast Stone
4. Section 05500 - Metal Fabrications: Product requirements for metal fabricated items for building into stone masonry for placement by this section.
5. Section 07900 - Joint Sealants: Sealant for perimeter, control, and expansion joints.

1.02 REFERENCES

A. American Society for Testing and Materials:
1. ASTM A36/A36M - Standard Specification for Carbon Structural Steel.
2. ASTM A153/A153M - Standard Specification for Zinc Coating (Hot-Dip) on Iron and Steel Hardware.
3. ASTM A580/A580M - Standard Specification for Stainless Steel Wire.
4. ASTM C568 - Standard Specification for Limestone Dimension Stone.

B. The Masonry Society:
1. TMS MSJC - Building Code for Masonry Structures (ACI 530/ASCE 5/TMS 402), Specification for Masonry Structures (ACI 530.1/ASCE 6/TMS 602) and Commentaries.

1.03 SUBMITTALS

A. Section 01330 - Submittal Procedures.

B. Product Data: Submit data on stone units, mortar products, reinforcement, wall tiles, anchors, and flashings.

C. Samples:
1. Submit two (2) stone samples illustrating minimum and maximum stone sizes, color range of each color required and texture.
2. Submit mortar color samples.

1.04 QUALIFICATIONS

A. Manufacturer: Company specializing in manufacturing products specified in this section with minimum three years of documented experience.

B. Installer: Company specializing in performing Work of this section with minimum three years of documented experience.

1.05 MOCKUP

A. Section 01400 - Quality Control Procedures: Mockup requirements.

B. Construct stone wall mockup, 6 feet long by 5 feet high, including stone, backup masonry, reinforcing, wall ties, mortar, sill and head flashings, corner condition, and typical control joint.

C. Locate where directed by Architect/Engineer.

D. Remove mockup when directed by Architect/Engineer.

1.06 PRE-INSTALLATION MEETINGS

A. Section 01300 - Administrative Requirements: Pre-installation meeting.

B. Convene minimum one week prior to commencing work of this section.

1.07 DELIVERY, STORAGE, AND HANDLING

A. Section 01400 - Quality Control Procedures: Product storage and handling requirements.

B. Protect stone from discoloration during storage on site.

C. Provide ventilation to prevent condensation from forming on stone.

1.08 ENVIRONMENTAL REQUIREMENTS

A. Hot and Cold Weather Requirements: TMS MSJC Specification.

PART 2 PRODUCTS

2.01 MORTAR PLACED STONE ASSEMBLIES

A. Manufacturer:
1. CCI Manufacturing, Inc. dba Custom Stone Supply, an Oldcastle Co. 4433 Terry-O Lane, Austin, TX 78745; or approved equal.

2.02 LIMESTONE VENEER COLOR SCHEDULE

A. Limestone Color “A”: Texas Gold” – Yellow golden color as manufactured by TexaStone Quarries, Garden City, TX 79739, (432) 354-2569 or San Jacinto Materials, Inc. , San Antonio, TX. 78707, (210) 736-0924.

B. Surface Texture: Split face.

C. Mortar and Grout: As specified in Section 04210.

D. Mortar Joint Color – Color to match limestone veneers, or as approved by Architect.

2.03 ACCESSORIES

A. Horizontal Joint Reinforcement: Ladder type, stainless steel wire conforming to ASTM A580/A580M Type 304, 3/16 inch side rods with 3/16 inch cross ties.

B. Wall Ties: Formed steel wire, 10 gage diameter, stainless steel conforming to ASTM A580/A580M, wire loop for embedment in back-up masonry, with provision for vertical adjustment after attachment.

C. Other Anchors in Direct Contact with Stone: ASTM A666, Type 304, stainless steel, of sizes and configurations required for support of stone and applicable superimposed loads.

D. Setting Buttons and Shims: Plastic.

E. Through-wall Flashings: Sheet copper; 16oz/sq ft thick. Copper-Laminated Flashing: Manufacturer's standard laminated flashing consisting of 5-oz./sq. ft. sheet copper bonded with asphalt between 2 layers of glass-fiber cloth. Use only where flashing is fully concealed in masonry. Acceptable Copper-Laminated Flashing manufacturers:

a. Copper Fabric Flashing; Advanced Building Products, Inc.
b. Copper Fabric; AFCO Products, Inc.
c. H & B C-Fab Flashing; Hohmann & Barnard, Inc.
d. Type FCC-Fabric Covered Copper; Phoenix Building Products.
e. Copper Fabric Flashing; Polytite Manufacturing Corp.
f. Copper Fabric Flashing; Sandell Manufacturing Co., Inc.
g. York Copper Fabric Flashing; York Manufacturing, Inc.

F. Masonry Cavities: Masonry Mat-full height.

E. Weep Vents: Non-woven polymer mesh

F. Joint Filler: Closed cell foam

G. Cleaning Solution: Non-acid, not harmful to stone, joint materials, or adjacent surfaces.

2.04 FABRICATION

A. Nominal Thickness: 4 inch

B. Nominal Face Size: Random size and shape, roughly square and/or rectandular, as shown on drawings.

C. Pattern and Coursing: Set random size stone at random and irregular coursing; and cut stone at running bond coursing as shown in drawings .

D. Fabricate for random size stone, ½” to 2” mortar beds and joints; and for cut stone at 3/8” mortar bed and joints.

E. Slope exposed top surfaces of stone and horizontal sill surfaces for shedding water.

PART 3 EXECUTION

3.01 EXAMINATION

A. Section 01310 - Construction Schedules.

B. Verify support work and site conditions are ready to receive work of this section.

C. Verify items built-in under other sections are properly located and sized.

3.02 PREPARATION

A. Establish lines, levels, and coursing. Protect from disturbance.

B. Clean interior stone prior to erection. Do not use wire brushes or implements that mark or damage exposed surfaces.

C. Coat cavity surfaces with damp-proofing prior to setting. Allow coating to cure.

D. Clean sawn surfaces of rust stains and iron particles.

3.03 INSTALLATION

A. Install flashings of longest practical length and seal watertight to back-up. Lap end joints minimum 6 inches and seal watertight.

B. Cut and or split stone at site to produce clean faces.

C. Size stone units to fit opening dimensions and perimeter conditions.

D. Wet absorptive stone in preparation for placement to minimize moisture suction from mortar.

E. Arrange stone pattern in color uniformity and minimize visual variations.

F. Arrange cut-stone coursing in running bond with consistent joint width.

G. Set stone in full mortar setting bed to fully support stone over bearing surface. Use setting buttons or shims to maintain correct joint width.

H. Reinforcement And Anchorage:
1. Attach wall ties to back-up to bond veneer to back-up at maximum 16 inches oc vertically and 36 inches oc horizontally, or a min. of one for every 2-2/3 sq. ft.

I. Joints:
1. Pack mortar into joints and work into voids. Finish mortar joints with rubbed burlap sack finish or as per sample location shown on plans.
2. At joints to be sealed, clean mortar out of joint before mortar sets. Brush joints clean.
3. Seal joints indicated with sealant. Perform sealant work in accordance with requirements of Section 07920

J. Accessories:

1. Install cavity vents at top of each cavity space, at spacing of 24 inches on center, horizontally.
2. Install weeps in vertical stone joints at 24 inches on center, horizontally; immediately above horizontal flashings, above shelf angles and supports, and at bottom of walls. Do not permit mortar accumulation in cavity space.

3.04 FIELD QUALITY CONTROL

A. Section 01400 - Quality Control Procedures: Testing and Inspection

B. Testing of Mortar and Grout: In accordance with Section 04810

3.05 CLEANING

A. Section 01700 - Execution Requirements: Final cleaning.

B. Remove excess mortar as work progresses, and upon completion of work.

C. Clean soiled surfaces with non-acid cleaning solution.

D. Use non-metallic tools in cleaning operations.

3.06 PROTECTION OF INSTALLED CONSTRUCTION

A. Section 01700 - Execution Requirements: Protecting installed construction.

B. During temporary storage on site, at end of working day, and during rainy weather, cover stone work exposed to weather with non-staining waterproof coverings, securely anchored.

END OF SECTION

SECTION 04720

CAST STONE

PART 1 GENERAL

1.1 SUMMARY

A. Section Includes:
1. Cast stone bricks and Medallion.
2. Anchors and supports.
3. Accessories.

B. Related Sections:
1. Section 03300 - Cast-In-Place Concrete: Backup for cast stone veneer.
2. Section 04065 – Masonry Mortar and Grout
3. Section 04810 - Unit Masonry Assemblies: Backup for cast stone veneer.

1.2 REFERENCES

A. American Society of Civil Engineers:
1. ASCE 7 - Minimum Design Loads for Buildings and Other Structures.

B. ASTM International:
1. ASTM A36/A36M - Standard Specification for Carbon Structural Steel.
2. ASTM A153/A153M - Standard Specification for Zinc Coating (Hot-Dip) on Iron and Steel Hardware.
3. ASTM A615/A615M - Standard Specification for Deformed and Plain Billet-Steel Bars for Concrete Reinforcement.
4. ASTM A653/A653M - Standard Specification for Steel Sheet, Zinc-Coated (Galvanized) or Zinc-Iron Alloy-Coated (Galvannealed) by the Hot-Dip Process.
5. ASTM A666 - Standard Specification for Austenitic Stainless Steel Sheet, Strip, Plate, and Flat Bar.
6. ASTM C1194 - Standard Test Method for Compressive Strength of Architectural Cast Stone.
7. ASTM C1195 - Standard Test Method for Absorption of Architectural Cast Stone.
8. ASTM C1364 - Standard Specification for Architectural Cast Stone.
9. ASTM D2244 - Standard Test Method for Calculation of Color Differences From Instrumentally Measured Color Coordinates.

C. The Masonry Society:
1. TMS MSJC - Building Code for Masonry Structures (ACI 530/ASCE 5/TMS 402), Specification for Masonry Structures (ACI 530.1/ASCE 6/TMS 602) and Commentaries.

1.3 DESIGN REQUIREMENTS

A. Wind Loads: Design anchors to withstand positive and negative wind loads acting normal to plane of wall, including increased loads at building corners.
   1. Design Wind Load: As calculated in accordance with applicable code and ASCE 7 with 120 mph basic wind speed, Exposure C.

B. Design anchor attachment to cast stone with factor of safety of 5: 1.

C. Design each individual anchor with factor of safety in vertical dead-load-bearing direction of 4: 1 and in horizontal lateral-load-bearing direction of 2: 1.

1.4 SUBMITTALS

A. Section 01330 - Submittal Procedures: Requirements for submittals.

B. Shop Drawings:
   1. Indicate cast stone layout, profiles, cross-sections, reinforcement, exposed faces, joint arrangement, anchoring methods, anchors.
   2. Indicate cast stone types and location.

C. Product Data: Submit data for cast stone units, wall ties, anchors, and other accessories.

D. Samples:
   1. Submit two of each cast stone brick item, full size in size illustrating profiles, finish, texture and color range.

E. Design Data: Submit design calculations for anchors.

F. Test Reports: Indicate concrete mix design compressive strength and water absorption.

G. Manufacturer's Installation Instructions: Submit instructions for anchor attachment, cast stone cleaning, and special Project installation conditions.

H. Manufacturer's Certificate: Certify Products meet or exceed specified requirements.

1.5 QUALITY ASSURANCE

A. Perform Work in accordance with TMS MSJC Code and TMS MSJC Specification.

B. Perform Work in accordance with Cast Stone Institute Technical Manual.

C. Maintain one copy copies of each document on site.

1.6 QUALIFICATIONS

A. Manufacturer: Company specializing in manufacturing Products specified in this section with minimum three years documented experience.

B. Installer: Company specializing in performing work of this section with minimum three years documented experience.

C. Design anchors under direct supervision of Professional Engineer experienced in design of this Work and licensed in State of Texas.

1.7 DELIVERY, STORAGE, AND HANDLING

A. Section 01600 - Product Requirements: Requirements for transporting, handling, storing, and protecting products.

B. Accept cast stone on site in manufacturer's protective packaging. Inspect for damage.

C. Store cast stone on site covered and elevated above grade. Protect cast stone from damage, soiling, and staining.

D. Provide ventilation to prevent condensation from forming on cast stone.

1.8 ENVIRONMENTAL REQUIREMENTS

A. Section 01600 - Product Requirements: Environmental conditions affecting products on site.

B. Hot and Cold Weather Requirements: TMS MSJC Specification.

1.9 COORDINATION

A. Section 01300 - Administrative Requirements: Requirements for coordination.

B. Coordinate cast stone work with masonry veneer and metal framed backup.

1.10 EXTRA MATERIALS

A. Section 01700 - Execution Requirements: Requirements for extra materials.

B. Furnish two of cast stone brick.

PART 2 PRODUCTS

2.1 CAST STONE

A. Manufacturers:
1. Classic Cast Stone of Dallas, Inc.
2. Dallas Cast Stone Co., Inc.
3. Pineapple Grove Designs
4. Substitutions: Section 01600 - Product Requirements.

B. Product Description: ASTM C1364, architectural cast stone units fabricated by dry casting or wet casting methods, with fine grained texture, simulating natural cut stone.

C. Color and Finish: As selected from manufacturers' full range of colors.

2.2 COMPONENTS

A. Portland Cement: ASTM C150, Type I - Normal or Type III - High Early Strength; white color.

B. Coarse Aggregates: ASTM C33, except grading requirements; granite, quartz or limestone.

C. Fine Aggregates: ASTM C33, except grading requirements; manufactured or natural sand.

D. Colors: ASTM C979; inorganic iron oxide pigments.

E. Admixtures: ASTM C494.

F. Fly Ash: ASTM C618.

G. Water: Potable.

H. Reinforcing Steel: ASTM A615/A615M, 60 ksi yield grade, deformed billet bars, galvanized or epoxy finish. Reinforce units as indicated and as required by ASTM C 1364. Use galvanized or epoxy-coated reinforcement when covered with less than 1-1/2 inches of material.

2.3 ACCESSORIES

A. Anchors and Supports: Stainless steel, ASTM A666, Type 304.
   1. Sizes and Configurations: As required for vertical and horizontal support of cast stone and resisting specified loads.

B. Mortar: As specified in Section 04065.

C. Plastic Flashings: Sheet polyethylene; 20 mil thick.

D. Sealant: Type specified in Section 07900; color to match cast stone color.

E. Cleaning Solution: Acidic detergent type, not harmful to cast stone or adjacent materials.

2.4 MIXES

A. Concrete Mix:
   1. Compressive Strength: ASTM C1194; minimum 6,500 psi at 28 days.
   2. Slump: No measurable slump.

3. Absorption: ASTM C1195; maximum 6 percent for cold water and 10 percent for boiling water at 28 days.

2.5 FABRICATION

A. Size: As indicated on Drawings, square edges.

B. Use rigid molds, constructed to maintain cast stone units uniform in shape, size, and finish.

C. Form units to length required for joint layout indicated on shop drawings. Field cutting to length is not permitted.

D. Reinforce units in accordance with ASTM C1364 for safe handling and as indicated on shop drawings to resist structural loads.
   1. Use galvanized or epoxy finished reinforcing when concrete cover over reinforcing is less than 1-1/2 inches thick, including end conditions.

E. Embed anchors and other cast-in items.

F. Form external corners to square joint profile.

G. Form drip slot in surface of exterior units projecting more than 1/2 inch beyond face of wall. Size slot not less than 3/8 inch wide and 1/4 inch deep; full width of projection.

H. Curing: Cure units to develop concrete quality, and to minimize appearance blemishes including non-uniformity, staining, or surface cracking.

I. Acid etch exposed-to-view surfaces to remove cement film and achieve uniform appearance.

2.6 SOURCE QUALITY CONTROL

A. Section 01400 - Quality Requirements: Testing, inspection and analysis requirements.

B. Maintain plant records and quality control program during production of cast stone units. Make records available upon request.

C. Test and analyze random specimen for of fabricated cast stone units:
   1. Compressive Strength: In accordance with ASTM C1194.
   2. Cold Water Absorption: In accordance with ASTM C1195.
   3. Resistance to Freezing and Thawing: In accordance with ASTM C666; maximum cumulative percent mass loss in accordance with ASTM C1364.

D. Inspect for color variation.

E. Visually inspect color differences between fabricated units and approved sample in accordance with ASTM D1729.

F. Allow witnessing of factory inspections and test at manufacturer's test facility. Notify Owner at least seven days before inspections and tests are scheduled.

PART 3 EXECUTION

3.1 EXAMINATION

A. Section 01300 - Administrative Requirements: Verification of existing conditions before starting work.

B. Verify field conditions are acceptable and are ready to receive work.

C. Verify items provided by other sections of work are properly sized and located.

3.2 PREPARATION

A. Coordinate installation of anchors furnished to other sections.

B. Provide for erection procedures and induced loads during erection. Furnish temporary bracing during installation. Maintain temporary bracing in place until final support is provided.

3.3 INSTALLATION

A. Establish lines, levels, and coursing indicated. Protect from displacement.

B. Maintain cast stone courses to uniform dimension. Form bed and head joints of uniform thickness.

C. Cast Stone Coursing:
1. Joint Location: As indicated on Drawings.
2. Joint Width: 3/8 inches.
3. Joint Shape: Concave.

D. Placing And Bonding:
1. Install anchors to support and position cast stone.
2. Drench cast stone units with clear running water, just prior to setting.
3. Lay cast stone units in full bed of mortar, with full head joints.
4. Do not shift or tap cast stone units after mortar has achieved initial set. Where adjustment is required, remove mortar and replace.
5. Rake mortar joints 3/4 inches deep for pointing. Sponge face of each stone to remove excess mortar.
6. Tuck point mortar joints. Pack mortar tightly into joint. Tool joint surface to shape specified.
7. Site cutting of cast stone units is not permitted.

E. Cavity Wall: Do not permit mortar to drop or accumulate into cavity air space or to plug weeps. Build backup masonry wythe ahead of cast stone veneer to receive cavity insulation and air/vapor barrier adhesive.

3.4 ERECTION TOLERANCES

A. Section 01400 - Quality Requirements: Tolerances.

B. Maximum Variation of Joint Thickness: Plus / minus 1/16 inch.

C. Maximum Offset From Adjacent Unit: Plus / minus 1/16 inch.

3.5 CLEANING

A. Section 01700 - Execution Requirements: Requirements for cleaning.

B. Remove excess mortar and sealant as work progresses.

C. Replace defective mortar. Match adjacent work.

D. Wet cast stone. Clean soiled surfaces with cleaning solution.

E. Use non-metallic tools in cleaning operations.

3.6 PROTECTION OF FINISHED WORK

A. Section 01700 - Execution Requirements: Requirements for protecting finished Work.

B. Protect cast stone from contact with mortar, soil, and other materials capable of staining or discoloring cast stone.

C. Remove and replace stained and otherwise damaged units and units not matching approved Samples.

END OF SECTION

SECTION 04820

REINFORCED UNIT MASONRY ASSEMBLIES

PART 1 GENERAL

1.1 SUMMARY

A. Section includes face brick and concrete masonry units; anchorage and accessories.

B. Related Sections:
1. Section 04065 - Masonry Mortar and Grout: Mortar and grout.
2. Section 05500 - Metal Fabrications: Product requirements for loose steel lintels and fabricated steel items for placement by this section.
3. Section 07260 - Vapor Retarders: Vapor retarder membrane placed.
4. Section 07840 - Firestopping: Firestopping at penetrations of masonry work.
5. Section 07900 - Joint Sealers: Rod and sealant at control and expansion joints.

1.2 REFERENCES

A. ASTM International:
1. ASTM A153/A153M - Standard Specification for Zinc Coating (Hot-Dip) on Iron and Steel Hardware.
2. ASTM A580/A580M - Standard Specification for Stainless Steel Wire.
3. ASTM A615/A615M - Standard Specification for Deformed and Plain Billet-Steel Bars for Concrete Reinforcement.
4. ASTM A641/A641M - Standard Specification for Zinc-Coated (Galvanized) Carbon Steel Wire.
5. ASTM A653/A653M - Standard Specification for Steel Sheet, Zinc-Coated (Galvanized) or Zinc-Iron Alloy-Coated (Galvannealed) by the Hot-Dip Process.
6. ASTM A951 - Standard Specification for Masonry Joint Reinforcement.
7. ASTM B370 - Standard Specification for Copper Sheet and Strip for Building Construction.
8. ASTM C55 - Standard Specification for Concrete Brick.
9. ASTM C62 - Standard Specification for Building Brick (Solid Masonry Units Made From Clay or Shale).
10. ASTM C67 - Standard Test Methods for Sampling and Testing Brick and Structural Clay Tile.
11. ASTM C129 - Standard Specification for Nonloadbearing Concrete Masonry Units.
12. ASTM C140 - Standard Test Methods of Sampling and Testing Concrete Masonry Units.
13. ASTM C216 - Standard Specification for Facing Brick (Solid Masonry Units Made from Clay or Shale).
14. ASTM C652 - Standard Specification for Hollow Brick (Hollow Masonry Units Made From Clay or Shale).
15. ASTM C744 - Standard Specification for Prefaced Concrete and Calcium Silicate Masonry Units.

16. ASTM D226 - Standard Specification for Asphalt-Saturated Organic Felt Used in Roofing and Waterproofing.

B. The Masonry Society:
1. TMS MSJC - Building Code for Masonry Structures (ACI 530/ASCE 5/TMS 402), Specification for Masonry Structures (ACI 530.1/ASCE 6/TMS 602) and Commentaries.

1.3 SUBMITTALS

A. Section 01330 - Submittal Procedures: Submittal requirements.

B. Samples for Initial Selection: For the following:
1. Face brick, in the form of straps of five or more bricks demonstrating full range of color.
   a. Data for special shapes
2. Colored mortar.
3. Color Charts for mortar color.
4. Concrete Masonry Units full range facing unit colors to the Architect for Selection

C. Shop Drawings: Indicate bars sizes, spacings, locations, reinforcement quantities, bending and cutting schedules, supporting and spacing devices for reinforcement, and accessories.

D. Product Data: Submit data for masonry units and fabricated wire reinforcement, wall ties, anchors, cement, lime and other accessories.

E. Samples: Submit five samples of units to illustrate color, texture and extremes of color range.

F. Design Data: Indicate required mortar strength, specified compressive strength of masonry, masonry unit assembly strength in each plane, and supportive test data.

G. Manufacturer's Certificate: Certify products meet or exceed specified requirements.

H. Project Foreman; Project experience

1.4 QUALITY ASSURANCE

A. Perform Work in accordance with TMS MSJC Code and TMS MSJC Specification.

B. Maintain one copy of each document on site.

C. FOREMAN: Provide an experienced and competent foreman. The foreman shall be in constant charge of the work and shall supervise work to see that it is carried out in strict accordance with the plans and specifications.

D. MEASUREMENT CONTROL: Submit proposed procedure for maintaining mortar proportion to Architect for approval. Once approval, insure quality control is maintained and procedure is not varied. Measurement of mortar ingredients may be by volume using a container of known capacity or by weight, using scales.

E. Source Limitations for Masonry Units: Obtain exposed masonry units of a uniform texture and color, or a uniform blend within the ranges accepted for these characteristics, through one source from a single manufacturer for each product required.

F. Source Limitations for Mortar Materials: Obtain mortar ingredients of a uniform quality, including color for exposed masonry, from a single manufacturer for each cementitious component and from one source or producer for each aggregate.

1.5 QUALIFICATIONS

A. Installer: Company specializing in performing Work of this section with minimum three years documented experience.

1.6 MOCKUP

A. Section 01400 - Quality Requirements: Mock-up requirements.

B. Construct reinforced masonry wall mockup, 4 feet long by 4 feet high, including masonry, mortar and accessories, backup, wall openings, and flashings.

C. Locate where directed by Architect/Engineer. The sample panel shall be constructed on the back side of the building and shall be protected from damage until masonry work is approved by Architect. The approved panel shall be used as a standard to judge all masonry laid on the project. Masonry work not equal to the sample in the opinion of the Architect shall be removed and re-laid. Use sample panel to test cleaning products.

D. Remove mockup when directed by Architect/Engineer.

1.7 PRE-INSTALLATION MEETINGS

A. Section 01300 - Administrative Requirements: Pre-installation meeting.

B. Convene minimum two weeks prior to commencing work of this section.

1.8 DELIVERY, STORAGE, AND HANDLING

A. Section 01600 - Product Requirements: Product storage and handling requirements.

B. Accept units on site. Inspect for damage.

C. Store masonry units on elevated platforms in a dry location. If units are not stored in an enclosed location, cover tops and sides of stacks with waterproof sheeting, securely tied. If units become wet, do not install until they are dry.

D. Store cementitious materials on elevated platforms, under cover, and in a dry location. Do not use cementitious materials that have become damp.

E. Store aggregates where grading and other required characteristics can be maintained and contamination avoided.

F. Deliver preblended, dry mortar mix in moisture-resistant containers designed for lifting and emptying into dispensing silo. Store preblended, dry mortar mix in delivery containers on elevated platforms, under cover, and in a dry location or in a metal dispensing silo with weatherproof cover.

G. Store masonry accessories, including metal items, to prevent corrosion and accumulation of dirt and oil.

1.9 ENVIRONMENTAL REQUIREMENTS

A. Section 01600 - Product Requirements.

B. Protection of Masonry: During construction, cover tops of walls, projections, and sills with waterproof sheeting at end of each day's work. Cover partially completed masonry when construction is not in progress.
   1. Extend cover a minimum of 24 inches down both sides and hold cover securely in place.

C. Stain Prevention: Prevent grout, mortar, and soil from staining the face of masonry to be left exposed or painted. Immediately remove grout, mortar, and soil that come in contact with such masonry.
   1. Protect base of walls from rain-splashed mud and from mortar splatter by spreading coverings on ground and over wall surface.
   2. Protect sills, ledges, and projections from mortar droppings.
   3. Protect surfaces of window and door frames, as well as similar products with painted and integral finishes, from mortar droppings.
   4. Turn scaffold boards near the wall on edge at the end of each day to prevent rain from splashing mortar and dirt onto completed masonry.

D. Hot and Cold Weather Requirements: TMS MSJC Specification.

1.10 COORDINATION

A. Section 01300 - Administrative Requirements: Coordination and project conditions.

B. Coordinate masonry work with metal panels, installation of window and door anchors.

1.11 EXTRA MATERIALS

A. Section 01700 - Execution Requirements: Spare parts and maintenance products.

B. Supply 50 of each size, color, and type of brick units.

PART 2 PRODUCTS

2.1 REINFORCED UNIT MASONRY ASSEMBLIES

A. Manufacturers:
1. Acme Brick Co.
2. Elgin Butler Brick Co.
3. Southern Brick.
4. Hanson Brick
5. Featherlite Building Products
6. Southwest Concrete Products
7. Substitutions: Section 01600 - Product Requirements.

2.2 COMPONENTS

A. Face Brick: ASTM C216, Type FBS, Grade SW; color as selected.
1. minimum compressive strength of 2,500 psi.
2. Test results showing no efflorescence.

B. Brick Size and Shape: Nominal size of 3-5/8”inches wide by 2 ¼” inches high by 7-5/8” inches long.
1. Furnish special units for 90 degree corners, lintels, bullnose and cove watertables (water table rowlock), and window sill.
2. Provide special shapes for applications where shapes produced by sawing would result in sawed surfaces being exposed to view.
3. Surface texture on sides and ends.

C. Brick provided shall be similar in texture and physical properties to those approved samples available for inspection at the office. In addition, brick provided shall not exceed the variation of color and texture of the approved sample.

D. CONCRETE MASONRY UNITS (CMU): Lightweight cement block, autoclave concrete masonry units conforming to ASTM C90, Type I Grade N for load bearing walls, and ASTM C129, Type I for non-bearing units. Provide all available sizes and shapes necessary to complete the project. Inside corners shall be square. Outside corners shall be rounded.
1. Split face
2. Special units having a vertical groove center on the end for control joints.
3. Continuous neoprene extruded key which fits into the grooves and lock the units together

E. Concrete Masonry Unit Size and Shape: Nominal modular size of 7-5/8” x 7-5/8” x 15-5/8” inches. Furnish special units for 90 degree corners, bond beams, lintels, and bullnosed corners.

2.3 ACCESSORIES

A. Face Brick - Single Wythe Joint Reinforcement: Ladder type; stainless steel conforming to ASTM A580/A580M Type 304, 3/16 inch side rods with 3/16 inch cross ties.

B. Face Brick - Wall Ties: Two piece system, Formed steel wire, 10 gage diameter, stainless steel conforming to ASTM A580/A580M, wire loop for attachment, with provision for vertical adjustment after attachment.
   1. Barrel-screw piece with self-drilling screw
      a. Heckmann Building Products: Pos-I-Tie
   2. Anchor Section: Sheet metal plate, 1-1/4 inches wide by 6 inches long, with screw holes top and bottom and with raised rib-stiffened strap, 5/8 inch wide by 3-5/8 inches long, stamped into center to provide a slot between strap and plate for inserting wire tie.
   3. Fabricate sheet metal anchor sections and other sheet metal parts from 0.097-inch- thick, steel sheet, galvanized after fabrication.
   4. Wire Ties: Triangular-shaped wire ties fabricated from 0.25-inch- diameter, hot-dip galvanized steel wire.
      a. Dayton Superior Corporation, Dur-O-Wal Division; D/A 210 with D/A 700-708.
      b. Heckmann Building Products Inc.; 315-D with 316.
      c. Hohmann & Barnard, Inc.; DW-10HS.

C. Stainless-Steel Drill Screws for Steel Studs: Proprietary fastener consisting of carbon-steel drill point and 300 Series stainless-steel shank, complying with ASTM C 954 except manufactured with hex washer head and neoprene washer, No. 10 diameter by length required to penetrate steel stud flange with not less than three exposed threads.

D. CMU - Horizontal reinforcing shall be a trussed-type reinforcing fabricated of No. 9 gauge galvanized steel bars; A-A Wire Products Company, "Blok-Truss", Dur-O-Wall Products Company, "Dur-O-Wall", Dayton Superior, "Ty-Wall", or approved equal. Reinforcing for exterior walls shall have three (3) continuous rods. Reinforcing for partitions may be two (2) bar type up to 12 inch wall thickness and three bar type for thickness over 12 inches. Reinforcing width shall be approximately 2" less than the combined wall thickness. Provide prefabricated corner units at all corners and tee sections at intersecting partitions.

E. Reinforcing Steel: ASTM A615/A615M, 60 ksi yield grade, deformed billet bars, uncoated finish.
   1. Reinforcing in grouted masonry construction and for horizontal reinforcing used in bond beams and masonry lintels.

F. Mortar and Grout: As specified in Section 04065.

G. Through-wall Flashings: Sheet copper; 16oz/sq ft thick. Copper-Laminated Flashing: Manufacturer's standard laminated flashing consisting of 7-oz./sq. ft. sheet copper bonded with asphalt between 2 layers of glass-fiber cloth. Use only where flashing is fully concealed in masonry. Acceptable Copper-Laminated Flashing manufacturers:

   a. Copper Fabric Flashing; Advanced Building Products, Inc.
   b. Copper Fabric; AFCO Products, Inc.
   c. H & B C-Fab Flashing; Hohmann & Barnard, Inc.
   d. Type FCC-Fabric Covered Copper; Phoenix Building Products.
   e. Copper Fabric Flashing; Polytite Manufacturing Corp.

f. Copper Fabric Flashing; Sandell Manufacturing Co., Inc.
g. York Copper Fabric Flashing; York Manufacturing, Inc.

H. Adhesives, Primers, and Seam Tapes for Flashings: Flashing manufacturer's standard products or products recommended by flashing manufacturer for bonding flashing sheets to each other and to substrates.

I. Sealant: type as specified in Section 07900.

J. Preformed Control Joints: Rubber or Polyvinyl chloride material. Furnish with corner and tee accessories, heat fused joints.
1. CONTROL JOINTS: Extruded rubber control joint meeting requirements of ASTM D735-RS710, or durometer hardness 80 extruded PVC conforming to ASTM D2287, as manufactured by Hohmann and Barnard, Inc., or approved equal.

K. Building Paper: ASTM D226, No. 15 asphalt saturated felt.

L. Weeps: Nonwoven Mesh in the vertical joints of the Masonry, reference Section 04090 Masonry Accessories.

M. Cavity Drainage Mat: reference Section 04090 Masonry Accessories.

N. Cleaning Solution: Non-acidic, not harmful to masonry work or adjacent materials, per manufacturer recommendation.
1. MASONRY CLEANER: Hallmark "DC 6", Sonneborn "Sonoclean 88", or ProSoCo "SureKleen", mixed and used according to the manufacturers printed instructions.

O. Anchor Bolts: Steel bolts complying with ASTM A307, Grade A having ASTM A563 hexhead nuts and flat washer, hot dipped galvanized.

P. Steel Lintels: Reference Section 05500 Metal Fabrications, hot-dip galvanized. See structural drawings.

PART 3 EXECUTION

3.1 EXAMINATION

A. Section 01300 - Administrative Requirements: Coordination and project conditions.

B. Verify field conditions are acceptable and are ready to receive work.

C. Verify items provided by other sections of work are properly sized and located.

D. Verify built-in items are in proper location, and ready for roughing into masonry work.

E. Proceed with installation only after unsatisfactory conditions have been corrected.

3.2 PREPARATION

A. Direct and coordinate placement of metal anchors supplied to other Sections.

B. Furnish temporary bracing during installation of masonry work. Maintain in place until building structure provides permanent support.

C. Furnish and maintain saw-cut masonry units, as necessary to fit around all structural elements, to fit built-in, to maintain bond and coursing, or as required by job conditions. Cuts shall be neat, and clean. Units shall be cut to proper size to maintain 3/8" thick mortar coursing.

D. SCAFFOLDING

1. Provide, erect and maintain scaffolding for this work. Make it available for other trades requiring execution of work associated with masonry. Scaffolding shall be of good construction, sturdy and conforming to all government ordinances and regulations. It shall be constructed or erected in a safe and substantial manner.

3.3 INSTALLATION

A. Establish lines, levels, and coursing indicated. Protect from displacement.
1. Lay out wall dimensions in advance to minimize masonry cutting and accurate location of openings, expansion joints, returns and offsets. Avoid use of less than 1/2 size masonry units. Do not tooth discontinued masonry. Instead, rack back 1/2 unit in both directions.

B. Where face brick is a blend of colors, carefully mix the various shades to avoid an accumulation of the same shade in one area.

C. Maintain masonry courses to uniform dimension. Form bed and head joints of uniform thickness.

D. Coursing of Concrete Masonry Units:
1. Bond: standard running, align cores.
2. Coursing: One unit and one mortar joint to equal 8 inches, modular coursing.
3. Mortar Joints: Concave.

E. Coursing of Brick Units:
1. Bond: 1/3 running.
2. Coursing: Three unit and three mortar joint to equal 8 inches, modular coursing.
3. Mortar Joints: Concave.

F. Placing And Bonding:
1. Lay solid masonry units in full bed of mortar, with full head joints.
2. Lay hollow masonry units with face shell bedding on head and bed joints.
3. Buttering corners of joints or excessive furrowing of mortar joints are not permitted.
4. Remove excess mortar as Work progresses.

5. Interlock intersections and external corners.
6. Do not shift or tap masonry units after mortar has achieved initial set. Where adjustment is required, remove mortar and replace.
7. Perform job site cutting of masonry units with proper tools to assure straight, clean, unchipped edges. Prevent broken masonry unit corners or edges. No damaged surfaces shall be exposed to view
8. Isolate masonry from vertical structural framing members with movement joint.
9. Isolate top of masonry from horizontal structural framing members and slabs or decks with compressible joint filler.

G. Weeps and Vents: Furnish weeps and vents in outer wythe at 24 inches oc horizontally above through-wall flashing, above shelf angles and lintels, and at bottom of walls.

H. Building paper: Overlap per manufacturer requirements and seal joints.

I. Cavity Wall: Do not permit mortar to drop or accumulated into cavity air space or to plug weeps.

J. Joint Reinforcement And Anchorage:
1. Space anchors as indicated, but not more than 16 inches o.c. vertically and 16 inches o.c. horizontally with not less than 1 anchor for each 2.67 sq. ft. of wall area. Install additional anchors within 12 inches of openings and at intervals, not exceeding 24 inches, around perimeter. Not less than 4 ties per surface (minimum).
2. Fasten screw-attached anchors through sheathing to wall framing with metal fasteners of type indicated. Use two fasteners.
3. Place masonry joint reinforcement in first and second horizontal joints above and below openings. Extend minimum 16 inches each side of opening.
4. Place joint reinforcement continuous in first and second joint below top of walls.
5. Lap joint reinforcement ends minimum 6 inches.
6. Support and secure reinforcing bars from displacement. Maintain position within 1/2 inch of dimensioned position.
7. Embed anchors attached to structural steel members. Embed anchorages in every second block or sixth brick joint.

K. Masonry Flashings:
1. Extend flashings horizontally through outer wythe at foundation walls, above ledge or shelf angles and lintels, and at bottom of walls, and turn down on outside face to form drip.
2. Turn flashing up minimum 12 inches, extend through sheathing, turn flashing up 3” and anchor to wall stud frame.
3. Lap end joints minimum 6 inches and seal watertight.
4. Turn flashing, fold, and seal at corners, bends, and interruptions.

L. Lintels:
1. Install loose steel lintels over openings.
2. Install reinforced unit masonry lintels over openings where steel or precast concrete lintels are not scheduled or indicated
3. Do not splice reinforcing bars.

4. Support and secure reinforcing bars from displacement.
5. Place and consolidate grout fill without displacing reinforcing.
6. Allow masonry lintels to attain specified strength before removing temporary supports.
7. Maintain minimum 8 inch bearing on each side of opening.

M. Grouted Components:
1. Reinforce bond beam per code requirement.
2. Lap splices bar diameters required by code.
3. Support and secure reinforcing bars from displacement.
4. Place and consolidate grout fill without displacing reinforcing.
5. At bearing locations, fill masonry cores with grout for minimum 12 inches either side of opening.
6. Fill cells of CMU on both sides of all openings and on both sides of control joints and expansion joints with type Class "B" Course Grout. Cells shall be reinforced with 1 - # 4 re-bar, or as noted in structural drawings. Grout shall be placed into the cells as the walls are constructed, otherwise not until the mortar has set.

N. Reinforced Masonry:
1. Lay masonry units with cells vertically aligned and cavities between wythes clear of mortar and unobstructed.
2. Place reinforcing, reinforcement bars, and grout.
3. Splice reinforcement in accordance with Section 03200.
4. Support and secure reinforcement from displacement.
5. Place and consolidate grout fill without displacing reinforcing.
6. Place grout in accordance with TMS MSJC Specification.
7. Where concrete masonry is noted to be grouted, cells containing reinforcing bars shall be filled solid with Class B grout. Grout shall not be poured until the mortar has set and cured, however, install grout as soon as possible. All cleanout closures, reinforcing, bolts and embedded items shall be in proper position before grouting is started.
8. Handle grout from the mixer to the point of deposit as rapidly as practical by methods which will prevent segregation of the mix and cause a minimum of grout splatter on reinforcing steel and masonry surfaces. Under normal weather conditions and typical masonry units, the individual lifts of grout shall be limited to four (4) feet in height with a waiting period between 30 and 60 minutes between lift placement. Depending upon weather conditions, the lift height and waiting conditions may be varied.
9. Place the first lift of grout to a uniform height and mechanically vibrate thoroughly to fill all voids. While the mortar is plastic and prior to initial set, the next lift should be poured and alternate cells vibrated 12 to 18 inches into the proceeding lift. Consolidate the proceeding lift and close any plastic shrinkage cracks or separations from the cell walls.
10. Arrange the work such that once grouting of a section of wall has started, the grouting shall proceed in lifts without stopping until the full height of the wall is poured. Reconsolidate the top lift after the required waiting period to fill any space left by settlement shrinkage.

O. Control And Expansion Joints:
1. Do not continue horizontal joint reinforcement through control and expansion joints.
2. Install preformed control joint device in continuous lengths. Seal butt and corner joints.
3. Size control joint in accordance with Section 07900 for sealant performance.
4. Form expansion joint by omitting mortar and cutting unit to form open space.
5. Install control joints at all exterior walls at both sides of door and window openings and at intervals not exceeding 20 ft centers. Control joints at doors shall begin at the upper edge of the door frame, in line with the outer jamb and shall extend the full height of the wall. Control joints at windows shall be along both edges of the opening, extending from the floor slab to the top of the wall.

P. Built-In Work:
1. As work progresses, install built-in metal door and glazed frames, fabricated metal frames, window frames, anchor bolts, and other items to be built-in the work and furnished by other sections.
2. Install built-in items plumb and level.
3. Bed anchors of metal door and glazed frames in adjacent mortar joints. Fill frame voids solid with grout or mortar. Fill adjacent masonry cores with grout minimum 12 inches from framed openings.
4. Adjust masonry anchors to masonry joints at equal spacings, not less than three each jamb and set in fresh mortar.
5. Do not build in materials subject to deterioration.

Q. Cutting And Fitting:
1. Cut and fit for pipes, conduit, sleeves and grounds. Coordinate with other sections of work to provide correct size, shape, and location.
2. Obtain Architect/Engineer's approval prior to cutting or fitting masonry work not indicated or where appearance or strength of masonry work may be impaired.

3.4 ERECTION TOLERANCES

A. Section 01400 - Quality Requirements: Tolerances.

B. Maximum Variation From Alignment: 3/16" inch.

C. Maximum Variation From Unit to Adjacent Unit: 1/16 inch.

D. Maximum Variation from Plane of Wall: 1/4 inch in 10 ft and 3/8 inch in 20 ft or more.

E. Maximum Variation from Plumb: 1/4 inch per story non-cumulative.

F. Maximum Variation from Level Coursing: 1/8 inch in 3 ft and 1/4 inch in 20 ft; 1/2 inch in 40 ft.

G. Maximum Variation of Joint Thickness: 1/32 inch in 1 ft, (+ or -) 1/8 inch entire length of wall.

H. Maximum Variation from Cross Sectional Thickness of Walls: 1/4 inch.

3.5 FIELD QUALITY CONTROL

A. Section 01400 - Quality Requirements: Testing and Inspection Services 01700 - Execution Requirements: Testing, adjusting, and balancing.

B. Brick Units: Test each type in accordance with ASTM C67, 5 random units for each 50,000 units installed.

C. Concrete Masonry Units: Test each type in accordance with ASTM C140.

D. Remove and replace masonry units that are loose, chipped, broken, stained, or otherwise damaged or that do not match adjoining units. Install new units to match adjoining units; install in fresh mortar, pointed to eliminate evidence of replacement.

E. Pointing: During the tooling of joints, enlarge voids and holes, except weep holes, and completely fill with mortar. Point up joints, including corners, openings, and adjacent construction, to provide a neat, uniform appearance. Prepare joints for sealant application, where indicated.

3.6 CLEANING

A. Section 01700 - Execution Requirements: Final cleaning.

B. Remove excess mortar and mortar smears as work progresses.

C. Protect masonry against staining by installing wall coverings.

D. Replace defective mortar. Match adjacent work.

E. Thoroughly clean masonry. Clean soiled surfaces with cleaning solution.

F. Protect sash, metal lintels and other corrodible parts during cleaning.

G. Use non-metallic tools in cleaning operations.

3.7 MASONRY WASTE DISPOSAL

A. Materials: Unless otherwise indicated, excess masonry materials are Contractor's property. At completion of unit masonry work, remove from Project site.

END OF SECTION

SECTION 05312
STEEL ROOF DECK

PART 1 - GENERAL

1.1 WORK INCLUDED

Steel roof deck complete with cover plates, cell closures and flashings and acoustical closures.

1.2 REFERENCE STANDARDS

A. ASTM A-36 - Structural Steel

B. Steel Deck Institute - "Basic Design Specifications".

C. ASTM A-611 - Grade "C" and ASTM A-653 carbon steel sheet.

D. AISI - Specification for the Design of Cold-Formed Steel Structural Members.

1.3 SHOP DRAWINGS

A. Submit shop drawings in accordance with Section 01300.

B. The Contractor shall obtain completely detailed shop drawings showing type of deck section employed in each area of roof, how they are adapted to special conditions, method of welding deck to supporting members, method of reinforcing deck at openings, and location and type of all accessories which are part of the deck proper. The Contractor shall carefully check these drawings, then submit them to the Architect/Engineer. The Architect/Engineer may conduct limited spot checks aimed solely at determining general comprehension of the design intent, then return them to the Contractor. The Contractor shall then carefully recheck the shop drawings and approve them prior to fabrication.

C. The Architect/Engineer's spot check does not relieve the Contractor from correcting, at his own expense, any items that may thereafter be found not to comply with the plans and specifications.

PART 2 - PRODUCTS

2.1 PRODUCTS

A. ACCEPTABLE MANUFACTURERS

Wheeling Corrugating Company or Vulcraft Division of Nucor. Substitutions: Items of same function and performance are acceptable if product data is submitted and approved.

B. MATERIALS AND COMPONENTS

1. Steel for painted deck: ASTM A-611, Grade C, Fy=33,000 psi.

2. Steel for galvanized deck: ASTM A-446, Fy=33,000 psi.

3. Bearing Plates and Angles: of ASTM A-36 type steel.

4. Anchor Bolts and Required Nuts and Washers: High strength type recommended for structural steel joints; ASTM A-325.

C. WELDING MATERIALS

Applicable AWS D1.1 type required for materials being welded.

D. DECKING AND RELATED ACCESSORIES

Roof Decking: Minimum 22 gauge sheet steel; 30 inch wide sheet; double span; manufactured by Wheeling or Vulcraft. Refer to plan for specific section properties required, including where painted and/or galvanized.

E. FABRICATION

Fabricate metal decking as recommended by the Steel Deck Institute. Fabricate to accommodate maximum working stress of 20,000 psi and maximum deflection of 1/360 of span.

F. SHOP FINISH

1. Steel shall be thoroughly cleaned in a chemical bath, followed by a rinse, phosphatized, rinsed, dried and properly prepared for painting. After phosphatizing, the surface shall be roller coat painted to insure an even protective covering with a gray flexible primer which when oven cured, shall have a moderate reflectance value.

2. Galvanized steel deck shall be structural Grade C standard black gage coated before fabrication in continuous strip by the Cook-Norteman process. Coating shall conform to ASTM A-525 Class G90 or QQ-S-775 Class d or ASTM G-01.

PART 3 - EXECUTION

3.1 INSTALLATION

A. Erect metal decking as recommend by the SDI. Properly align and level on structural supports. Deck sheets shall extend over three or more spans, where possible. End laps of sheets shall be a minimum of 2" and shall occur over supports.

B. Allow minimum 1-1/2 inch bearing when supported by structural steel and minimum 4 inch bearing when supported by masonry.

C. Deck shall be anchored by welding directly through the bottom of the ribs to all structural supports. Welds to supports shall be made at the side ribs and at the center of each sheet and at other ribs so that the spacing between welds across the width of each sheet does not exceed 12 inches. Welds shall be not less than 5/8" diameter fusion welds, and shall be made by competent, experienced

welders. When deck spans exceed 5'-0", side laps of adjacent units shall be fastened together at midspan by tack welding, sheet metal screws, or bottom punching. At free edges of deck (entire perimeter of decked area) weld to supports at 12" on center.

D. Refer to Plans for specific instructions on weld patterns necessary for diaphragm action.

E. Exercise care to avoid overloading the supporting structural elements when placing bundles of steel deck or other construction loads on the framing. Do not use deck units for storage or working platforms until permanently fastened in position.

F. Damaged or bent sections, or sections which do not properly mesh together at the side laps, shall not be used.

G. Sloping roofs having a slope of 1/4" per foot or more shall be erected beginning at the low side so that laps are made "shingle" fashion.

H. Minor openings, not shown on the plans or detailed on the shop drawings, shall be neatly cut and trimmed in the field; reinforce as required to maintain the strength and continuity of the deck.

I. Reinforce openings 6 inches to 18 inches in size with 2 " x 2 " x 1/4 " steel angles. Place angles perpendicular to flutes, extended minimum two flutes each side of openings and weld to deck.

J. Reinforce openings over 18 inches in size in accordance with structural framing details indicated on drawings.

K. Install minimum 6 inch wide cover plates where deck changes direction. Spot weld in place at maximum 12 inches on center.

L. Install closure strips and angles flashings as required to close openings between deck and walls, columns and openings.

3.2 TOUCH-UP PAINTING

A. After decking installation, wire brush, clean and paint scarred areas, welds and rust spots on top and bottom surfaces of decking units and supporting steel members.

B. Touch-up galvanized surfaces with galvanizing repair paint applied in accordance with manufacturer's instructions.

C. Touch-up painted surfaces with same type of shop paint used on adjacent surfaces.

3.3 ACCEPTANCE

Contractor shall notify the structural engineer when steel deck installation is complete to permit observation prior to placement of insulation or roofing substrate.

END OF SECTION 05312

SECTION 05500
METAL FABRICATIONS

PART 1 - GENERAL

1.01 SUMMARY

A. Provide the following:
1. Loose bearing and leveling plates.
2. Loose steel lintels.
3. Shelf and relieving angles.
4. Miscellaneous framing and supports for overhead doors and grilles.
5. Miscellaneous steel trim.
6. Pipe bollards.
7. Shop fabricated ferrous metal items.
8. Miscellaneous metal items.

1.02 SUBMITTALS

A. Submit for approval samples for items exposed to view, shop drawings, product data.

1.03 QUALITY ASSURANCE

A. Comply with governing codes and regulations. Provide products of acceptable manufacturers which have been in satisfactory use in similar service for three years. Use experienced installers. Deliver, handle, and store materials in accordance with manufacturer's instructions.

PART 2 - PRODUCTS

2.01 MATERIALS

A. Ferrous Materials:
1. Steel Plates, Shapes and Bars: ASTM A 36.
2. Steel Tubing: ASTM A 500 or A 501
3. Galvanized Steel Sheet, Commercial Quality: ASTM A 526, G90.
4. Steel Pipe, Black Finish: ASTM A 53.
5. Steel Pipe, Galvanized Finish: ASTM A 53.
6. Gray Iron Castings: ASTM A 48, Class 30.
7. Malleable Iron Castings: ASTM A 47, Grade 32510.
8. Reinforcing Bars: ASTM A 615, Grade 60.
9. Brackets, Flanges, and Anchors: Cast or formed metal.
10. Concrete Inserts: Threaded or wedge type.
11. Welding Rods and Bare Electrodes: AWS specifications.
12. Zinc-Coating: Hot-dip galvanized coating for materials in exterior assemblies or exterior walls.

A. Stainless Steel Materials:
1. Bar Stock: ASTM A 276, Type 302 or 304.
2. Plate: ASTM A 666, Type 302 or 304.

B. Aluminum Materials:
1 Extruded Bars and Shapes: ASTM B 221 aluminum alloy.
2. Rolled Tread Plate: ASTM B 632 aluminum alloy.

2. Rivets: ASTM B 316, aluminum alloy.

3. Sheet for Expanded Aluminum Grating: ASTM B 209.
4. Fasteners: ASTM A 153.
5. Finish: Mill finish.

C. Fasteners:
1. Bolts and Nuts: Hexagon head type, ASTM A 307, Grade A.
2. Lag Bolts: Square head, FS FF-B-561.
3. Machine Screws: Cadmium plated steel, FS FF-S-92.
4. Wood Screws: Flat head carbon steel, FS FF-S-111.
5. Plain Washers: Round carbon steel, FS FF-W-92.
6. Drilled-In Expansion Anchors: FS FF-S-325.
7. Toggle Bolts: Tumble-wing type, FS FF-B-588.
8. Lock Washers: Spring type carbon steel, FS FF-W-84.
9. Zinc-Coating: Fasteners in exterior assemblies or exterior walls.

E. Auxiliary Materials:
1. Non-shrink Metallic Grout: CE CRD-C621.
2. Non-shrink Nonmetallic Grout: CE CRD-C621.
3. Interior Anchoring Cement: Hydraulic expansion cement.
4. Exterior/Interior Anchoring Cement: Erosion-resistant hydraulic expansion cement.
5. Shop Primer: Alkyd primer, FS TT-P-645.
6. Galvanizing Repair Paint: SSPC - Paint 20.
7. Bituminous Paint: Asphalt mastic, SSPC - Paint 12.

PART 3 - EXECUTION

3.01 INSTALLATION

A. Take field measurements prior to preparation of shop drawings and fabrication. Do not delay job; allow for cutting and fitting if field measurement not practical.

B. Form work true to line with sharp angles and edges. Weld continuously, grind flush and make smooth on exposed surfaces.

C. Install work plumb and level with hairline joints and ground flush welds.

D. Lintels: Provide sizes indicated with 8" bearing at each end.

E. Touch-up damaged coatings with shop primer and galvanize repair paint.

F. Paint items scheduled in accordance with painting section.

END OF SECTION

SECTION 06100
CARPENTRY WORK

PART 1 - GENERAL

1.01 WORK INCLUDED

A. Rough carpentry, finish carpentry, and cabinet work. Refer to Schedule located at the end of this Section.

1.02 RELATED WORK

A. Section 09900 - Painting: Site finishing of finish carpentry and cabinet work.

1.03 REFERENCES

A. AWPA C1 - 77, C2 - 77, P5 - 78 - Wood Treatment.

B. PS 1 - Construction and Industrial Plywood.

C. PS 20 - American Softwood Lumber Standard.

D. ASTM D245 - Establishing Structural Grades and Related Allowable Properties for Visually Graded Lumber.

1.04 QUALITY ASSURANCE

A. Rough Carpentry Lumber: Douglas fir or yellow pine meeting the national grading rule for dimension lumber and the design values as determined in accordance with ASTM D245. All lumber shall bear a grade mark stamp of either the West Coast Lumber Inspection Bureau or Southern Pine Inspection Bureau. Moisture content shall not exceed 19%.

B. Fabricate cabinet work and site made finish carpentry items in accordance with recommendations of Quality Standards of Architectural Woodwork Institute (AWI).

1.05 SUBMITTALS

A. Submit shop drawings of cabinet work in accordance with Section 01340.

B. Indicate materials and wood species, component profiles, fastening, joining details, finishes and accessories.

1.06 DELIVERY, STORAGE AND HANDLING

A. Do not deliver shop fabricated carpentry items until site conditions are adequate to receive the work. Protect items from weather while in transit.

B. Store indoors, in ventilated areas with a constant minimum temperature of 60 degrees F. maximum

relative humidity of 25 to 55 percent.

PART 2 - PRODUCTS

2.01 ROUGH CARPENTRY MATERIALS

A. Lumber:
   1. Structural members subject to stress in bending shall be of "Construction" grade fir or "No. 1" yellow pine.
   2. Members subject to stress in compression only shall be of "Standard" grade fir or "No. 2" grade yellow pine.
   3. Wood nailers and blocking cut in between framing may be of "Utility" grade fir or "No. 3" grade yellow pine.
   4. No used lumber shall be used for any permanent construction.

B. Douglas Fir Plywood: Sheathing grade.

C. Nails, Spikes and Staples: Galvanized for exterior locations, high humidity locations and treated wood; plain finish for other interior locations; size and type to suit application.

D. Bolts, Nuts, Washers, Lags, Pins and Screws: Medium carbon steel; sized to suit application galvanized for exterior locations, high humidity locations and treated wood; plain finish for other interior locations.

E. Fasteners: Toggle bolt type for anchorage to hollow masonry, expansion shield and lag bolt type for anchorage to solid masonry or concrete, bolt or power activated type for anchorage to steel.

2.02 FINISH CARPENTRY AND CABINETWORK MATERIALS

A. Softwood Lumber: PS 20; Graded in accordance with AWI; maximum moisture content of 6 percent; of the following species and grades:

Item	Species	Grade
Window Sills	Red Oak	Custom
Trim Moldings, Casings	Red Oak	Custom
Cleat Stock	Douglas Fir	Economy
Cabinet Base, Back	Douglas Fir	Economy

B. Oak Plywood: Graded in accordance with AWI, APA A-B INT, core material of veneer; of the following grades and eventual finishes:

Item	Grade	Finish
Cabinetry	Custom	Transparent
Doors and Trim	Custom	Transparent

C. Plastic Laminate: General purpose type; minimum 1/16 inch thick; satin finish, manufactured by Formica or Wilson Art.

D. Adhesive: Contact type. For shop fabricated work, adhesive of type recommended by millwork manufacturer to suit application.

E. Nails: Size and type to suit application.

F. Bolts, Nuts, Washers, Lags, Pins and Screws: Size and type to suit application.

2.03 CABINET HARDWARE

A. Drawer and Door Pulls: Stanley #4485, satin finish aluminum.

B. Catches: Stanley #SP46 magnetic type, aluminum with plain finish.

C. Drawer Slides: Grant #248, economy nylon ball bearing slide.

D. Hinges: Stanley #1503-2 and #1503-9X.

E. Shelf Standards and Rests: K&V - No. 255 pilaster standard, surface mounted and No. 256 support.

2.04 WOOD TREATMENT

A. All wood plates, blocking and nailers at exterior walls shall be pressure treated in accordance with AWPA Spec. C1-77 or latest Revisions and C2-77 or latest Revision with CCA conforming to AWPA Spec. P5 - 78 to minimum final retention of .25 lbs. per cubic foot of wood and kiln dried after treatment. Each piece shall be Grade marked and shall show the retention, or the Contractor shall furnish a commercial laboratory inspection.

2.05 FABRICATION

A. Fabricate cabinet work and finish carpentry items in accordance with recommendations of AWI and to extent indicated in Schedule located at the end of this Section. Shop-fabricate items where possible.

B. Fit shelves, doors and exposed edges with matching solid wood edging. Use full length pieces only.

C. Cabinetwork Doors: Minimum 3/4 inch thick and of type construction indicated in Schedule.

D. Apply plastic laminate finish in full uninterrupted sheets consistent with manufactured sizes.

Corners and joints to be hairline. Slightly bevel arises. Locate counter butt joints at least 2 feet from sink cut - outs.

E. Cap exposed plastic laminate edges with material of same finish and pattern. Mechanically fasten splash backs to counter-tops with steel brackets at 16 inches on center.

F. Use exposed fastening devices or nails only when unavoidable.

G. Shop-assemble cabinet work and finish carpentry items for delivery to site in sizes easily handled and to ensure passage through building openings.

2.06 PREPARATION OF FINISH CARPENTRY ITEMS / CABINET WORK FOR FINISHING

A. Sand work smooth and set exposed nails and screws. Apply wood filler in exposed nail and screw indentations and leave ready to receive site applied finishes. On items to receive transparent finishes, use wood filler which matches surrounding surfaces and of types recommended for applied finishes.

B. Seal and varnish concealed and semi-concealed surfaces. Brush apply only.

C. Preservative treat surfaces in contact with cementitious materials.

D. Provide cutouts for plumbing fixtures, inserts, appliances, outlet boxes, and other fixtures and elements. Verify locations of cutouts from site dimensions. Seal contact surfaces of cutouts.

2.07 WOOD TREATMENT

A. Shop pressure treat and deliver to site ready for installation, wood materials requiring pressure impregnated preservatives.

PART 3 - EXECUTION

3.01 FRAMING, FURRING, AND STRIPPING

A. Erect wood framing, furring, stripping and nailing members true to lines and levels. Do not deviate from true alignment more than 1/4 inch.

B. Space members as indicated on drawings.

C. Construct members of continuous pieces of longest possible lengths.

3.02 INSTALLATION OF FINISH CARPENTRY ITEMS AND CABINET WORK

A. Set and secure cabinet work and finish carpentry items in place rigid, plumb, and square.

B. Use purpose designed fixture attachments for mounted components.

C. When necessary to cut and fit on site, make material with ample allowance for cutting. Provide trim for scribing and site cutting.

D. Permanently fix cabinet and counter bases to floor using appropriate angles and anchorages. Counter-sink semi-concealed anchorage devices used to wall mount components and conceal with solid plugs of species to match surrounding wood. Place flush with surrounding surfaces.

E. Carefully scribe cabinet work which is against other building materials, leaving gaps of 1/32 inch maximum. Do not use additional overlay trim for this purpose.

F. Install fixtures and accessories supplied under other Sections for installation. Install items in accordance with manufacturer's instructions.

G. Ensure that mechanical and electrical items affecting this Section of work are properly placed, complete, and have been inspected by the Architect/Engineer prior to commencement of installation.

3.03 SCHEDULE

A. Rough Carpentry Work:
   1. Non-structural framing.
   2. Wood framing for overhead door openings.
   3. Preservative treatment of wood members where required.
   4. Miscellaneous furring and stripping for wall finishes.
   5. Miscellaneous blocking and canting for membrane roofing system and related metal flashings.
   6. Blocking and canting for roof mounted mechanical items.
   7. Miscellaneous wall reinforcing, hanger anchors and framing required to properly support wall mounted fixtures, lighting fixtures and to frame openings for air conditioning ducts.

B. Exterior Finish Carpentry Work:
   1. Fascias.
   2. Miscellaneous trim.
   3. Preservative treatment where required.

C. Interior Finish Carpentry Work:
   1. Window Sills; Door Trim - Custom Grade Construction.

D. Cabinet Work:
   1. Cabinetwork; custom grade construction. Doors and drawers are to be overlay type.
   2. Plastic laminated countertops; custom grade construction.

END OF SECTION

SECTION 06220
MILLWORK

PART 1 - GENERAL

1.01 SCOPE:
Furnish, fabricate and deliver items of millwork as shown on Drawings.

1.02 RELATED WORK SPECIFIED ELSEWHERE:
Section 06100 - Carpentry

1.03 SUBMITTALS:

A. Shop Drawings: Submit in accordance with Section 01340. Indicate materials, species, construction, sizes, shapes, quantities, locations and conditions of adjoining work. Show items in related or dimensional position with sections or detail show either full size or 3" = 1'-0" scale.

B. Samples: Submit samples of laminated plastic color chips and one of each species of solid wood and plywood.

1.04 REFERENCE STANDARDS:

A. "Quality Standards" of the Architectural Woodwork Institute, latest edition (AWI)

1.05 QUALITY ASSURANCE:
Architect reserves the right to approve millwork manufacturer selected to furnish millwork. Approved millwork manufacturer shall have a reputation for doing satisfactory work, on time and shall have successfully completed work during the past 5 years.

1.06 DELIVERY, STORAGE AND HANDLING:
Deliver, store and handle millwork in manner to prevent damage and deterioration. Do not deliver until building or storage area is sufficiently dry so that millwork will not be damaged by excessive changes in moisture content. Maintain relative humidity in storage areas not to exceed 60%.

1.07 COORDINATION:

A. Millwork manufacturer is responsible for details and dimensions not controlled by job conditions, and shall show on his shop drawings required field measurements beyond his control. Coordinate to establish, verify and maintain field dimensions and job conditions.

B. Coordinate installation of granite, tile, electrical, audio wiring, etc. in millwork items.

PART 2 - PRODUCTS

2.01 QUALITY GRADE:

A. Materials and Fabrication: Premium grade for transparent (natural) finish, premium grade for painted finish, in accordance with AWI "Quality Standards", conforming to the following section:
   1. Section 100 - Solid Wood Members.
   2. Section 200 - Plywood and Particle Board.
   3. Section 300 - Standing and Running Trim.
   4. Section 1300 - Cabinet Doors, 1-3/8" and thicker.

2.02 MATERIALS:

A. Plywood:
   1. Concealed Plywood: At option of mill.
   2. Finish Plywood: 3/4" red oak, exterior grade.

A. Miscellaneous Wood:
   1. Particle Board: 45 lbs./cu. ft. density, factory filled surfaces conforming to CS-236-66.
   2. Adhesive: Type 11, CS-35-61.
   3. Hardboard: 1/2" tempered hardboard, S2S.

A. Plastic Laminate Countertops & Backsplash: 1/16" general purpose plastic laminate.

2.03 MANUFACTURERS:

A. Plastic Laminate Tops & Trim:
   1. Approved cabinet shop.

B. Plastic Laminate:
   1. Wilsonart, color and style as selected by Architect

PART 3 - EXECUTION

3.01 FABRICATION:

A. Fabrication Workmanship:
   1. No exposed solid trim or plywood shall have nail holes.
   2. Conceal edge grain of exposed and semi-exposed plywood and particle board with hardwood edge bands.

B. Milling: Fabricate, assemble and finish items at mill as far as practical. Deliver ready to assemble and set in place. Machine sand items at mill. Provide millwork free of machine or tool marks or defects that will show through finish.

C. Laminated Plastic Tops and Panels: Glue tops and panels under pressure using Type II water resistant adhesive. Glue plastic, core and balancing sheet in one operation after edge bands have been applied. If possible, fabricate tops from one continuous sheet of laminated plastic; minimize joints where joints are unavoidable.

D. Items of Work:

1. Miscellaneous wood standing and running trim; red oak interior and cypress exterior.

3.02 INSTALLATION:

Set cabinets to lines and level. Accurately scribe and closely fit face plates, bases, trim and filler strips to irregularities of adjacent surface. Fasten cabinets with concealed fasteners of adequate strength to securely hold work in place. Leave work complete and in operating order.

END OF SECTION

SECTION 07160
BITUMINOUS DAMP PROOFING

PART 1 - GENERAL

1.01 WORK INCLUDED

A. Cold applied asphalt bitumen dampproofing.

B. Locations: Apply to exterior face of all gypsum sheathing behind masonry veneer, including sealing joints and protrusions through dampproofing with accessories.

1.02 RELATED WORK

A. Section 04210 - Stone Masonry

B. Section 09260 - Gypsum Drywall Systems

1.03 SUBMITTALS

A. Submit product data and manufacturer's installation instructions under provisions of Section 01340.

1.04 ENVIRONMENTAL REQUIREMENTS

A. Maintain ambient and surface temperatures above 40 degrees F. for 24 hours before application, and continuously until dampproofing has cured.

PART 2 - PRODUCTS

2.01 ACCEPTABLE MANUFACTURERS

A. Bituminous Dampproofing:
1. "Hydrocide 700", Sonneborn Building Products.
2. "Dehydratine 6", W. R. Grace and Co.
3. "Dehydratine 6", A. C. Horn, Inc.

C. Substitutions: Under provisions of Section 01630.

2.02 MATERIALS

A. Bituminous Dampproofing: ASTM 1227 - Type I; asphalt emulsion type; semi-mastic; reinforced with glass fibers; for trowel application.

B. Fabric: Asphalt coated glass fabric that is flexible, acid and alkali resistant and unaffected by rot or temperature extremes.

PART 3 -EXECUTION

3.01 INSPECTION

A. Verify surfaces are solid, free from frozen matter, loose particles, cracks, pits, rough projections, and other foreign matter detrimental to adhesion and application of dampproofing.

B. Verify items which penetrate surfaces to receive dampproofing are securely installed.

C. Beginning of installation means acceptance of substrate.

3.02 PREPARATION

A. Clean and prepare surfaces to receive dampproofing in accordance with manufacturer's instructions.

B. Apply mastic to seal penetrations, small cracks, and honeycomb in substrate.

3.03 APPLICATION

A. Prime surfaces in accordance with manufacturer's instructions.

B. First Coat: Apply cold bitumen dampproofing with trowel; apply in one continuous and uniform coat, thoroughly covering surface.

C. Embed fabric in first coat of dampproofing and seal with a <u>second coat</u> of the same dampproofing within 24 hours of the first coat. Fabric shall originate at the outer edge of the brick ledge (lug) and steel lintel and shall continue up the interior surface of the back-up wall a minimum of 12 inches. At the steel beams and windows sills, apply fabric above components. Overlap 4 inches minimum and seal tight.

D. Seal watertight items projecting through dampproofing surfaces.

3.04 SCHEDULE

A. Thoroughly apply bituminous dampproofing at all joints and penetrations at exterior face of gypsum sheathing.

B. Flashing: Apply bituminous dampproofing and membrane waterproofing in office area, at window sills, above all steel lintels, at exterior base of gypsum sheathing within brick veneer walls and as detailed on drawings.

END OF SECTION

SECTION 07193
PLASTIC VAPOR BARRIER

PART 1 - GENERAL

1.01 SCOPE:
Provide plastic vapor barrier film under slabs on grade.

1.02 RELATED WORK SPECIFIED ELSEWHERE:

A. Section 02200 – Earthwork

B. Section 03300 - Cast-in Place Concrete

1.03 QUALITY ASSURANCE:

A. Codes and Standards:
1. ASTM D-91, procedure 'B'.
2. ASTM D-96, procedure 'B'.

B. Job Conditions:
Do not install plastic vapor barrier until all fill work has been completed.

1.04 SUBMITTALS:
Submit samples of plastic vapor barrier and complete installation details in accordance with Section 01340.

1.05 COORDINATION:
Coordinate installation with scheduled concrete pours to avoid delays. Make provisions for installation of work by other trades.

PART 2 - PRODUCTS

2.01 MATERIALS:
Membrane Film: Fortifiber Noistop underslab vapor barrier as manufactured by the Fortifiber Corp or approved equal.

PART 3- EXECUTION

3.01 PREPARATION:
Do not proceed until sand fill is level and without voids, and plumbing and electrical rough-ins are complete.

3.02 INSTALLATION:
Vapor Barrier Film: Apply continuously directly over sand fill. Install with width of sheet parallel with direction of pour, joints taped.

3.03 PROTECTION:

Protect complete membrane from damage. Prior to pouring concrete, inspect membrane for punctures of damage and repair as required.

END OF SECTION

SECTION 07200
ROOF INSULATION BOARD

PART 1 - GENERAL

1.01 SUMMARY

A. Provide roof thermal insulation boards.

1.02 SUBMITTALS

A. Shop drawings are required; indicating all attachments and application methods, product sizes and packaging, thermal properties, technical data, and limitations.

1.03 QUALITY ASSURANCE

A. Comply with governing codes and regulations. Provide products of acceptable manufacturers that have been in satisfactory use in similar service for three years. Use experienced installers. Deliver, handle, and store materials in accordance with manufacturer's instructions.

B. Comply with product specification – ASTM C1289., Federal Specification – HH-1-1972/1, Factory Mutual – Class 1 Roof insulation per FM Standard 4450, installation as described in the current edition of the FMRC Approval Guide, Underwriters Laboratories – Classified (Class A) Formed Plastic as roof deck construction material. Meeting UL Standards 790, 1256.

PART 2 - PRODUCTS

2.01 MATERIALS

A. ROOF INSULATION BOARD:
1. Thermal insulation board composed of a rigid closed cell polyisocyanurate foam core bonded to reinforced aluminum foil facers on both sides.
2. Thermal insulation board size: Width: 48”, Length: 96”, Thickness: 3.5”
3. Thermal Properties: R=22.1, Weight per square: 60 lbs., Coverage: 416 s.f. per 4” x 8” panel bundle, flute spanability: 3 5/8”
4. Approved Manufacturer: Rmax, Inc.or Thermax or approved equal. Rmax, Inc., Dallas, Texas, Phone Number: (972) 387-4500.

B. ACCESSORIES
1. Metal Roof Manufacturer to provide all other accessories required securing the metal roof covering to the roof deck and structure.
2. All accessories will be made watertight and will be firmly secured into place.

PART 3 - EXECUTION

3.01 INSTALLATION

A. Attach the Thermaroof Plus to the roof deck with FM approved mechanical fasteners.

B. Install material in accordance with manufacturer's instructions and approved submittals. Coordinate with work of other sections.

C. Refer to Rmax publication "TR-0101A. "General Notes for Use and Installation of Rmax Roofing Insulations".

D. Thermaroof Plus must be tarped, placed on skids, and kept completely dry before and throughout construction.

3.02 WARRANTY

A. Refer to manufacturer's Policy for warranty conditions.

END OF SECTION

SECTION 07213
FIBROUS BATT INSULATION

PART 1 - GENERAL

1.01 WORK INCLUDED

A. Batt insulation and vapor barrier in exterior wall construction.

B. Batt insulation for filling perimeter window and door shim spaces and crevices in exterior wall/roof assembly.

C. Batt insulation for acoustical purposes in interior partitions.

1.02 REFERENCES

A. FS HH-I-521F - Insulation Blankets, Thermal Fiber, for Ambient Temperatures.

1.03 DELIVERY OF MATERIALS

A. Furnish material in manufacturer's packaging, complete with installation instructions.

1.04 PERFORMANCE REQUIREMENTS

A. Materials of this section shall provide continuity of thermal and vapor barrier at building enclosure elements.

1.05 SUBMITTALS

A. Submit product data on product characteristics and performance criteria under provisions of Section 01340.

PART 2 - PRODUCTS

2.01 ACCEPTABLE MANUFACTURES

A. Owens-Corning Fiberglas Corporation.

B. Manville.

C. W. R. Grace & Company.

D. CertainTeed Corporation.

E. Substitutions: Under provisions of Section 01630.

2.02 MATERIALS

A. Batt Insulation (Interior Partitions): at 3 5/8" metal stud walls, R - 13, preformed fiberglass batts, friction fit type without membrane, conforming to FS HH - I - 521F Type I.

B. Batt Insulation (Interior Partitions): at 6" metal stud walls, R - 19, preformed fiberglass batts, friction fit type without membrane, conforming to FS HH - I - 521F Type II.

C. Batt Insulation (Exterior Walls): at 6" metal stud walls, R - 19, preformed fiberglass batts, conforming to FS HH - I - 521F Type II with non-reflective covering one side.

E. Tape: 2 inch wide self adhering type; polyethylene faced.

PART 3 - EXECUTION

3.01 PREPARATION

A. Verify adjacent materials are dry and ready to receive installation.

B. Verify mechanical and electrical services within walls have been installed and tested.

3.02 INSTALLATION

A. Install batt insulation in accordance with manufacturer's recommendations.

B. Install batt insulation in exterior framed walls and scheduled interior walls without gaps or voids.

C. Trim insulation neatly to fit spaces. Use batts free of damage.

D. Fit insulation tight into spaces and tight to exterior side of mechanical and electrical services within the plane of insulation. Leave no gaps or voids.

E. Install insulation at steel joists contiguously to full perimeter of office area to provide an air-tight envelope.

F. Install insulation with factory applied non-reflective membrane facing conditioned side of building spaces. Lap ends and side flanges of membrane over framing members as required to provide a tight seal. Tape seal cracks and tears or cuts in membrane.

3.03 FIELD QUALITY CONTROL

A. Inspections/observations will be performed by Owner to ascertain compliance with specified requirements in accordance with the General Conditions.

END OF SECTION

SECTION 07710
ROOF CURB

PART 1 - GENERAL

1.01 DESCRIPTION

A. The general conditions and supplemental general conditions of the contract apply to this section as if completely written herein.

B. The General Contractor shall provide all labor, material and equipment to completely install prefabricated Metal Roof Curbs.

C. Prefabricated Metal Roof Curbs shall be used at all roof penetrations including but not limited to HVAC units, pipe penetrations, and exhaust fans. Refer to drawings.

PART 2 - PRODUCTS

2.01 ROOF CURB

A. Prefabricated Metal Roof Curbs shall be manufactured by LMCurbs, 609 Fisher Road (P.O. Box 5299), Longview, Texas 75604 (75608-5299), 1-903-759-1331, 1-800-284-1412, Fax # 903-759-0879 or approved equal.

2.02 CONSTRUCTION

A. Curbs shall be constructed using minimum .080, 3003H14 aluminum, or heavier as required to support the load of the equipment, with fully mitered and heli-arc welded corners, integral base plates, with water diverter cricket. Factory installed insulation available upon request.

B. Minimum height of Curb shall be 8" above finished roof (or as specified).

C. Curbs shall be constructed to match slope of roof and provide a level top surface for mounting of equipment.

D. Curb flange shall be constructed to match configuration of roof panel. Side flange shall extend to the next natural seam in the roof panels and conform to seam configurations.

2.03 COORDINATION

A. Size of curbs and required options shall be coordinated by curb manufacturer, general contractor, and mechanical contractor prior to fabrication.

B. Shop drawings bearing architects approval shall be used for the fabrication of the curbs.

END OF SECTION

SECTION 07900
JOINT SEALERS

PART 1 - GENERAL

1.01 WORK INCLUDED

A. Clean and prepare joint surfaces.

B. Sealant and backing materials.

1.02 RELATED WORK

A. Section 0300 – Cast in Place Concrete: Sealants used in conjunction with foundation concrete.

B. Section 04210 – Stone Masonry: Sealants used in conjunction with stone masonry.

C. Section 08110 - Standard Steel Doors and Frames: Sealants used in conjunction with steel frames.

D. Section 08330 - Rolling Service Doors: Sealants used in conjunction with wood blocking and trim.

F. Section 08410 - Aluminum Entrances and Storefronts: Perimeter sealants and back-up materials

G. . Section 08800 - Glazing: Sealants used in conjunction with glazing methods.

H. Section 09260 – Gypsum Board Systems: Sealant used in conjunction with acoustical treatment.

1.03 REFERENCES

A. ASTM C920 - Elastometric Joint Sealants.

B. ASTM D1622 - Flexible Cellular Materials Polyethylene (Closed Cell Foam).

C. ASTM D1752 - Flexible Cellular Materials - Polyvinylchloride (Closed Cell Foam).

D. SWRI (Sealant, Waterproofing and Restoration Institute) - Sealant and Caulking Guide Specification.

E. FS TT-S-227 - Sealing Compounds: Elastomeric Type, Multi-Component.

F. FS TT-S-230 - Sealing Compounds: Elastomeric Type, Single-Component.

1.04 SUBMITTALS

A. Submit product data under provisions of Section 01340.

B. Submit product data indicating sealant chemical characteristics, performance criteria, limitations, and color availability for selection by owner.

C. Submit manufacturer's surface preparation and installation instructions under provisions of Section 01340.

D. Submit intended use for each type of sealant to be used on this project.

1.05 QUALITY ASSURANCE

A. Perform work in accordance with selected sealant manufacturer's requirements for surface preparations and material installation instructions.

B. Applicator: Company specializing in performing the work of this section with minimum two years documented experience. Approval by manufacturer, if required by warranty.

1.06 COORDINATION

A. Coordinate the work with all sections referencing this section as required.

1.07 ENVIRONMENTAL REQUIREMENTS

A. Maintain temperature and humidity recommended by the sealant manufacturer during and after installation.

1.08 WARRANTY

A. Warranty: Include coverage of installed sealants and accessories which fail to achieve airtight and watertight seal, exhibit loss of cohesion or adhesion, or do not cure.

PART 2 - PRODUCTS

2.01 SEALANT MATERIALS

A. Sealant: Polyurethane base, multi-component, chemical curing; FS Type I - Self leveling; conforming to requirements of FS TT-S227E, Class A; Shore "A" hardness of minimum 15, maximum 50; non-staining, non-bleeding; color as selected. "Sonolastic Paving Joint Sealant" by Sonneborn, or "Sealtight Pourthane" by W. R. Meadows, or "Urexpan NR-200" by Pecora.

B. Sealant: Polyurethane Base, multi-component, chemical curing; FS Type II - non-sagging, conforming to requirements of FS TT-S-227E, Class A; Shore "A" hardness of minimum 15, maximum 50; non-staining, non-bleeding; color as selected. "Sonolastic NP2" by Sonneborn, or "Dynatrol II" by Pecora, or "Dymeric" by Tremco.

C. Sealant: Polyurethane Base, single-component, moisture curing; FS Type II - conforming to requirements of FS TT-S-230C, Class A; Shore "A" hardness of minimum 15, maximum 50; non-staining, non-bleeding; color as selected. "Sonolastic NP-1" by Sonneborn, or "Dynatrol I" by Pecora.

E. Sealant: Silicone base, single component, moisture curing, conforming to FS TT-S-1543A, Type II - Non-sagging, Class A; and FS TT-S-230C, Type II, Class A; non-staining, non-bleeding, color as selected "795" by Dow Corning, or "SILPRUF 2000" by General Electric, or "895 Silicone" by Pecora.

F. Paving Joint Fillers: Type: Bituminous fiber. Application: Filler for exterior paving joints.

G. Substitutions: Under provisions of Section 01630.

2.02 ACCESSORIES

A. Primer: Non-staining type, recommended by sealant manufacturer to suit application. Use primer wherever recommended by sealant manufacturer including applications in contact with Kynar painted metals.

B. Joint Cleaner: Non-corrosive and non-staining type, recommended by sealant manufacturer; compatible with joint forming materials.

C. Joint Backing: Round, closed cell polyethylene foam rod; oversized 30 to 50 percent larger than joint dimension; "Sonofoam Backer-Rod" manufactured by Sonneborn or "Green-rod" manufactured by Nomaco, Inc. or #92 "Green Rod" Closed Cell Polyethylene manufactured by Pecora, or equal products by manufacturers listed in 2.01.

D. Acoustical Tape: Premolded, closed cell PVC Foam Strip; Armaflex Insulation Tape manufactured by Armstrong.

E. Substitution: Items of same function and performance are acceptable in conformance with Section 01630.

PART 3 - EXECUTION

3.01 EXAMINATION

A. Verify that surfaces and joint openings are ready to receive work and field measurements are as shown on drawings and recommended by the manufacturer.

B. Beginning of installation means installer accepts existing surfaces and substrates.

3.02 PREPARATION

A. Clean and prime joint surfaces in accordance with manufacturer's instructions.

B. Remove loose materials and foreign matter which might impair adhesion of sealant.

C. Verify that joint backing and release tapes are compatible with sealant.

D. Protect elements surrounding the work of this Section from damage or disfiguration.

3.03 INSTALLATION

A. Install sealant in accordance with manufacturer's instructions.

B. Measure joint dimensions and size materials to achieve required 2:1 width/depth ratios.

C. Install joint backing to achieve a neck dimension no greater than 1/3 the joint width.

D. Install bond breaker where joint backing is not used.

E. Apply sealant within recommended application temperature ranges. Consult manufacturer when sealant cannot be applied within recommended temperature ranges.

F. Install sealants in uniform, continuous ribbons without gaps and free of air pockets, foreign embedded matter, ridges and sags.

G. Install sealants with complete "wetting" of joint bonding surfaces equally on opposite sides.

H. Fill sealant rabbet to a slightly concave surface, slightly below adjoining surfaces. Where horizontal joints are between a horizontal surface and vertical surface, fill joint to form a slight convex (cove), so that joint will not trap water or dirt.

3.04 CLEANING/PROTECTION

A. Clean adjacent soiled surfaces with non-corrosive, non-staining type cleaner recommended by sealant manufacturer; compatible with joint forming materials.

B. Protect sealant joints as required until cured.

3.05 SCHEDULE

A. Type 1: Polyurethane sealant, multi-component, for contraction and expansion joints in concrete structure.

B. Type 2: Polyurethane sealant, multi-component, for sealing all types of joints at exposed exterior locations and joints at interior locations subject to movement.

C. Type 3: Polyurethane sealant, single component, for caulking, glazing and sealing applications at interior and concealed exterior locations, including sheet metal flashing.

D. Type 4: Silicone sealant, single component, for sealing concealed interior and exterior joints and plumbing fixtures.

END OF SECTION

SECTION 08110
STEEL DOORS AND FRAMES

PART 1 - GENERAL

1.01 WORK INCLUDED

A. Non-rated rolled steel doors and frames.

1.02 RELATED WORK

A. Section 04100 - Mortar: Masonry mortar fill of metal frames.

B. Section 07900 - Joint Sealers.

C. Section 08712 - Door Hardware.

D. Section 08800 - Glazing.

E. Section 09110 - Metal Stud Framing System: Double studs at wall openings.

F. Section 09900 - Painting: Field painting of doors and frames.

G. Section 15936 - Air Inlets and Outlets: Door louvered grille.

1.03 REFERENCES

A. SDI – 100 - Standard Steel Doors and Frames.

B. SDI -105 - Recommended Erection Instructions for Steel Frames.

1.04 SUBMITTALS

A. Submit shop drawings and product data under provisions of Section 01340.

B. Indicate door elevations, internal reinforcement, closure method, and cut outs for glazing and louvers.

C. Indicate frame configuration, anchor types and spacing, location of cutouts for hardware, reinforcement, and finish.

1.05 DELIVERY, STORAGE AND PROTECTION

A. Deliver, store, protect and handle products to prevent damage.

B. Protect doors and frames with resilient packaging sealed with heat shrunk plastic if not delivered in manufacturer's packaging.

C. Break seal on-site to permit ventilation.

1.06 FIELD MEASUREMENT/COORDINATION

A. Verify that field measurements are as indicated on shop drawings.

B. Coordinate work with masonry and stud framing work and door hardware installation.

PART 2 - PRODUCTS

2.01 ACCEPTABLE MANUFACTURERS

A. Steelcraft, American Standard Co.

B. Premier Products, Inc.

C. The Ceco Corporation.

D. Texas Steel Corporation.

E. Republic Builders Products Corp.

F. Curries Industries.

G. Deansteel.

H. Substitutions: Under provisions of Section 01630.

2.02 DOORS AND FRAMES

A. Exterior Doors: SDI-100, Grade II-Heavy-duty 1-3/4 inches, Model 4 -seamless - composite construction.

B. Interior Doors: SDI-100, Grade II-Heavy-duty 1-3/4 inches, Model 3 -seamless - hollow steel construction.

C. Exterior and Interior Frames: Welded type, 16 gauge thick material, core thickness.

D. Doors: 18 gauge thick material.

2.03 DOOR CORE

A. Exterior Doors: Polystyrene foam insulation. See Door Schedule on plans.

B. Interior Doors: Impregnated cardboard honeycomb.

2.04 ACCESSORIES

A. Louvers: Type specified in Section 15936 - Air Inlets and Outlets.

B. Rubber Silencers: Resilient rubber fitted into drilled hole, 3 per strike side and 2 per head at double doors.

C. Glazing Stops: Rolled steel channel shape, butted corners; prepared for countersink style screws.

D. Double Doors: Provide 16 gauge steel edge channel at inactive leaf.

2.05 PROTECTIVE COATINGS

A. Bituminous Coating: Fibered asphalt emulsion.

B. Primer: Type recommended by manufacturer.

2.06 FABRICATION

A. Fabricate frames as welded unit type. Accurately form and cut mitered corners. Grind welded joints to smooth uniform finish.

B. Fabricate frames and doors with hardware reinforcement plates welded in place. Provide mortar guard boxes and jamb anchors. Weld floor jamb anchors in place.

C. Prepare frame for silencers. Provide three single rubber silencers for single doors on strike side; two per head on pairs of doors.

D. Fill surface depressions of frames with metallic paste filler and grind to smooth finish.

E. Close top and bottom edges of all doors flush with inverted steel channel closures. Weld in place to seal edges flush.

F. Leave metal door seams invisible, or weld, fill and grind smooth.

G. Fabricate frames as required to suit masonry wall coursing.

2.07 FINISH

A. Chemically treat surfaces and apply one shop coat of grey oven-baked primer.

B. Finish with enamel of color to be selected.

C. Coat inside of frame profile with bituminous coat when installed in masonry opening.

PART 3 - EXECUTION

3.01 EXAMINATION

A. Verify that rough opening sizes and tolerances are acceptable.

3.02 INSTALLATION

A. Install frames in accordance with SDI-105.

B. Coordinate with masonry construction for anchor placement.

C. Coordinate installation of glass and glazing.

D. After installation, touch up scratched or damaged surfaces. Use type of primer identical to that used for shop coat.

3.03 TOLERANCES

A. Maximum Diagonal Distortion: 1/16 inch measured with straight edge, corner to corner.

3.04 ADJUSTING AND CLEANING

A. Adjust hardware for smooth and balanced door movement.

3.05 SCHEDULE

A. Reference floor plans, elevations and sections for door locations and door and frame schedule and door types for door sizes, construction and features.

END OF SECTION

SECTION 08210
WOOD DOORS

PART 1 - GENERAL

1.01 WORK INCLUDED

A. Wood Doors.

B. Glazing.

1.02 RELATED WORK

A. Section 08712 - Door Hardware.

B. Section 08800 - Glazing.

C. Section 09900 - Painting: Site finishing doors.

1.03 REFERENCE STANDARDS

A. AWI Quality Standards of Architectural Woodwork Institute.

1.04 SHOP DRAWINGS AND PRODUCT DATA

A. Submit shop drawings and product data under provisions of Section 01340.

B. Indicate door elevations, general construction including internal reinforcement and blocking, jointing methods, hardware locations, and cutouts for louvers.

1.05 QUALITY ASSURANCE

A. Conform to requirements of AWI Quality Standard Section 1300 Premium Grade.

1.06 DELIVERY, STORAGE AND PROTECTION

A. Protect products under provisions of Section 01620.

B. Package, deliver and store doors in accordance with AWI requirements.

1.07 WARRANTY

A. Standard warranty and guarantee in accordance with the General Conditions.

B. Manufacturer's Warranty: Provide for replacing including cost of re-hanging and refinishing at no cost to Owner, wood doors exhibiting defects in materials or workmanship including warp and de-lamination for life of original installation.

PART 2 - PRODUCTS

2.01 ACCEPTABLE MANUFACTURERS

A. Manufacturer and Type: Weyerhaeuser "Marshfield" Core, DPC-1.

B. Other Acceptable Manufacturers:
1. Mohawk Flush Doors, Inc.
2. IPIK Door Company, Inc.
3. Eggers Hardwood Products Corporation.
4. Vauter Door Company.
5. Algoma Hardwoods, Inc.
6. Buell Door Co.
7. Haley Bros., Inc.

C. Substitutions: Under provisions of Section 01630.

2.02 DOOR TYPE

A. Flush Interior Doors: 1-3/4 inches thick; solid core construction; wood veneer faces.

2.03 DOOR CONSTRUCTION - AWI QUALITY STANDARD

A. Solid, Non-Rated Core: AWI Section 1300, PC-particleboard.

2.04 FLUSH DOOR FACING

A. Facing Quality: AWI custom grade.

B. Flush Interior Door Veneer: Red Oak species wood, plain sliced with book matched grain, with uniform consistent coloring throughout, for transparent finish.

2.05 ADHESIVES

A. Core Assembly Adhesive: AWI, Type II (water-resistant).

B. Face Assembly Adhesive: AWI, Type I (waterproof).

2.06 ACCESSORIES

A. Glass Stops: Wood type designed to conform to UL requirements.

2.07 FABRICATION

A. Fabricate non-rated doors in accordance with requirements of AWI Quality Standards.

B. Provide doors with minimum 1-1/2 inch thick side edge strips; of hardwood species to match face veneers. Top and bottom edge strips shall be minimum 1-1/8 inch hardwood.

PART 3 - EXECUTION

3.01 INSTALLATION

A. Install doors in accordance with manufacturer's instructions.

B. Machine cut relief for hinges and closers and coring for handsets and cylinders.

C. Trim door width by cutting equally on both jamb edges to a maximum of 3/16 inch.

D. Trim door height by cutting equally on top and bottom edges to a maximum of 3/4 inch.

E. Pilot drill screw and bolt holes.

F. Prepare doors to receive finish hardware in accordance with AWI requirements.

G. Conform to AWI requirements for fit tolerances.

H. Coordinate installation of glass and glazing.

3.02 INSTALLATION TOLERANCES

A. Maximum Diagonal Distortion: 1/8 inch measured with straight edge, corner to corner.

3.03 ADJUSTING AND CLEANING

A. Adjust for smooth and balanced door movement.

3.04 SCHEDULE

A. Reference floor plans, elevations and sections for door locations and door and frame schedule and door types for door sizes, construction and features.

END OF SECTION

SECTION 08330
ROLLING SERVICE DOORS

PART 1 - GENERAL

1.01 SUMMARY

A. This Section includes coiling service doors.

B. Structural Performance: Provide overhead coiling doors capable of withstanding the effects of gravity loads and the following loads and stresses without evidencing permanent deformation of door components:

1. Wind Load: Uniform pressure (velocity pressure) of 20 lbf/sq. ft. (960 Pa), acting inward and outward.

C. Performance Requirements: Provide overhead coiling doors capable of withstanding the effects of gravity loads and uniform wind-load pressure (velocity pressure) of 20 lbf/sq. ft. (960 Pa), acting inward and outward, without evidencing permanent deformation of door components. Design overhead coiling door components and operator to operate for not less than 100,000 cycles. One complete cycle of a door begins with the door in the closed position. The door is then moved to the open position and back to the closed position.

D. Submittals:

1. Product Data.

PART 2 - PRODUCTS

2.01 MANUFACTURERS

A. Subject to compliance with requirements, provide products by one of the following:

1. Raynor Rolling Doors
2. Alpine Overhead Doors, Inc.
3. Atlas Door Corp.; Div. of Clopay Building Products Co.
4. The Cookson Company.
5. Cornell Iron Works Inc.
6. Dynamic Closures (1995) LTD.
7. McKeon Rolling Steel Door Company, Inc.
8. Overhead Door Corporation.
9. Southwestern Steel Rolling Door Co.
10. Wayne-Dalton Corp.

2.02 MATERIALS

A. Door Curtain: Interlocking slats of one piece for door width; of material thickness recommended by door manufacturer for performance, size, and type of door indicated; and as follows:

1. Steel Slats:
   a. Slat Gage: Rollformed from hot dipped galvanized (G-90) steel per ASTM A 653, minimum 0.0239 inch (0.61 mm) 24 gage.
   a. Slat Profile: Interlocking flat slats.

B. Endlocks: Manufacturer's malleable iron galvanized endlocks fastened to alternate curtain slats with two zinc plated steel rivets per lock for curtain alignment and resistance against lateral movement.

C. Windlocks: Malleable-iron castings secured to curtain slats with galvanized rivets or high-strength nylon, as required to comply with wind load.

D. Bottom Bar: Consisting of extruded shape or 2 angles, not less than 1/8 inch (3 mm) thick, metal to match slats.

1. Astragal: Provide a replaceable, adjustable, continuous, compressible gasket of flexible vinyl, rubber, or neoprene.

E. Curtain Jamb Guides: Fabricate of steel angles, or channels and angles, with sufficient depth and strength to retain curtain, to allow curtain to operate smoothly, and to withstand loading.

F. Hood: Metal to match slats. Manufacturer's standard metal thickness and hood shape. Provide closed ends for surface-mounted hoods and fascia for any portion of between-jamb mounting projecting beyond wall face. Provide intermediate support brackets as required to prevent sag.

G. Weatherseals: Replaceable, adjustable, continuous, compressible weather-stripping gaskets fitted to bottom, jambs, and top, and continuous sheet in hood of exterior doors.

H. Hardware: Manufacturer's standard push/pull handles for push-up-operated or emergency-operated doors and locking device.

I. Counterbalance: Adjustable, oil-tempered, heat-treated steel helical torsion springs mounted around structural carbon-steel pipe, and contained in barrel of sufficient diameter and wall thickness to support rolled-up curtain without distortion of slats and to limit barrel deflection to not more than 0.03 in./ft. (2.5 mm/m) of span under full load; with grease-sealed bearings or self-lubricating graphite bearings.

J. Brackets: Manufacturer's standard design, either cast-iron or cold-rolled steel plate bolted to guides for mounting curtain and barrel assembly..

K. Finishes: Comply with NAAMM's "Metal Finishes Manual for Architectural and Metal Products" for recommendations for applying and designating finishes.

L. Thermoset Finish for Steel and Galvanized Steel: Apply manufacturer's standard baked finish consisting of primer and thermosetting topcoat according to coating manufacturer's written instructions for cleaning, pretreatment, application, thermosetting, and minimum dry film thickness.

M. Chain-Hoist Operator: Provide manual chain-hoist operator consisting of endless steel hand chain, chain pocket wheel and guard, and gear-reduction unit with a maximum 35-lbf (155-N) effort for door operation. Provide alloy steel hand chain with chain holder secured to operator guide.

PART 3 - EXECUTION

3.01 INSTALLATION

A. Installation: Install door and operating equipment complete with necessary hardware, jamb and head mold strips, anchors, inserts, hangers, and equipment supports according to Shop Drawings, manufacturer's written instructions, and as specified.

B. Lubricate bearings and sliding parts; adjust doors to operate easily, free from warp, twist, or distortion and fitting weathertight for entire perimeter.

END OF SECTION

SECTION 08410
ALUMINUM ENTRANCES AND STOREFRONTS

PART 1 - GENERAL

1.01 WORK INCLUDED

A. Aluminum doors, frames, and glazed lights.

B. Anchors, brackets and attachments.

C. Door hardware.

D. Perimeter sealant.

1.02 WORK INSTALLED BUT FURNISHED UNDER OTHER SECTIONS

A. Section 08712 - Door Hardware: Door hardware items other than specified in this Section.

1.03 RELATED WORK

A. Section 04210 - Stone Masonry System: Preparation of adjacent work to receive work of this Section.

B. Section 06100 - Carpentry Work: Wood blocking.

C. Section 07900 - Joint Sealers: Perimeter sealants and back-up materials.

D. Section 08800: Glazing.

E. Section 09110 - Metal Stud Framing System: Double studs at wall openings.

1.04 REFERENCE STANDARDS

A. AAMA - Metal Curtain Wall, Window, Store Front and Entrance - Guide Specifications Manual.

B. ASTM B221 – Aluminum - Alloy Extruded Bars, Rods, Wire, Shapes and Tubes.

C. ANSI A117.1 - 1986 Safety Standards for the Handicapped (Reference Section 01415 - Facilities for the Handicapped).

1.05 PERFORMANCE

A. System to provide for expansion and contraction within system components caused by a cycling temperature range of 170 degrees F. over a 12-hour period without causing detrimental effects to system or components.

B. Design and size members to withstand dead loads and live loads caused by positive and negative wind pressure acting on normal to plane of wall as measured in accordance with ANSI/ASTME 330. Minimum requirements equal to Vistawall Series 3000.

C. Limit mullion deflection 1/200, or flexure limit of glass with full recovery of glazing materials, whichever is less.

D. Drain water entering joints, condensation occurring in glazing channels, or migrating moisture occurring within system, to exterior by weep drainage network as recommended by manufacturer.

E. Limit air infiltration through assembly to 0.06 cu. ft./min./sq. ft. of assembly surface area, measured at a reference differential pressure across assembly of 0.3 inches water gage.

F. System to accommodate, without damage to system or components, or deterioration of perimeter seal: Movement within system; movement between system and perimeter framing components; dynamic loading and release of loads; and defection of structural support framing.

1.06 SUBMITTALS

A. Submit shop drawings and product data under provisions of Section 01340.

B. Include system and component dimensions; components within assembly; framed opening requirements and tolerances; anchorage and fasteners; glass; door hardware requirements; and affected related work.

1.07 QUALITY ASSURANCE

A. Perform work in accordance with AAMA and ANSI A117.1 - 1986 requirements and standards.

B. Installer: Company specializing in performing the work of this section with minimum two years documented experience, and if required, manufacturer approval.

1.08 DELIVERY OF MATERIALS

A. Deliver material in manufacturer's packaging complete with installation instructions.

B. Handle, store and protect pre-finished aluminum components under provisions of Section 01620 and as recommended by manufacturer.

1.09 COORDINATION

A. Coordinate work with masonry and stud framing work, glazing and sealant work.

1.10 GUARANTEE/WARRANTY

A. Provide written guarantee in accordance with the General Conditions.

B. Warranty: Cover complete system for failure to meet specified requirements.

PART 2 - PRODUCTS

2.01 ACCEPTABLE MANUFACTURERS

A. Frames: Flush Glazing System - Series 3000 type manufactured by Vistawall Architectural Products.

B. Doors: Narrow Style - Series 212 type manufactured by Vistawall Architectural Products.

C. Other Acceptable Manufacturers:
   1. Kawneer.
   2. Amarlite.
   3. PPG.
   4. United States Aluminum Corporation.

D. Substitutions: Under provisions of Section 01630.

2.02 MATERIALS AND COMPONENTS

A. Frames/mullions (exterior): 4-1/2 inch wide x 2-inch deep profile; of extruded 6063-T5 aluminum alloy; ASTM B221.

B. Doors: Extruded aluminum alloy 6063-T5; ASTM B221; walls .125 inch thick, 1-3/4 inch deep with 2-1/8 inch wide vertical stiles; 2-1/4 inch wide top rail and 4 inch wide bottom rail.

C. Sidelight and Glazing Materials: Type specified in Section 08800 - Glazing.

D. Sealant and Backing Materials: As specified in Section 07900 -Joint Sealers.

E. Anchorage Devices: Type recommended by manufacturer to suit application. Exposed fasteners will <u>not</u> be acceptable.

2.03 HARDWARE

A. Weatherstripping: Vistawall, V-231, bottom rail weatherstrip.

B. Closers: Type specified in Section 08712.

C. Push/Pulls: Vistawall, PB-11 push bars, PH-10 pull handles.

D. Security Dead Locks: Type specified in Section 08712.

E. Panic Hardware: Type specified in Section 08712.

F. Butt Hinges: Type specified in Section 08712.

G. Stops: Type specified in Section 08712.

H. Cylinder Locks: Type specified in Section 08712.

I. Threshold: Vistawall, TH -4.

2.04 FABRICATION

A. Fabricate components with minimum clearances and shim spacing around perimeter of assembly, yet enabling installation and dynamic movement of perimeter seal.

B. Rigidly fit and secure joints and corners with screw and spline/sheer block system. Make joints and connections flush, hairline, and weatherproof.

C. Develop drainage holes with moisture pattern to exterior.

D. Prepare components to receive anchor devices. Fabricate anchorage items.

E. Arrange fasteners, attachments, and jointing to insure concealment from view.

F. Prepare components with internal reinforcement for door hardware.

2.05 FINISHES

A. Exposed Extruded Aluminum Surfaces: Non-specular as fabricated mechanical finish, medium matt etched chemical finish with an Architectural Class I clear anodic coating conforming to Aluminum Association Standard AA-M12C22A41.

B. Apply one coat of bituminous paint to concealed aluminum surfaces in contact with cementitious or dissimilar materials. Tape specifically manufactured for this purpose, as recommended by wall system manufacturer, may also be used.

PART 3 - EXECUTION

3.01 INSPECTION

A. Verify wall openings and adjoining materials are ready to receive work of this Section.

B. Beginning of installation means acceptance of existing conditions.

3.02 INSTALLATION

A. Install wall system in accordance with manufacturer's recommendations. Ensure assemblies are plumb, level and free of warp or twist. Maintain dimensional tolerances and alignment with adjacent work.

B. Provide alignment attachments and shims as required and use sufficient corrosion resistant anchorage devices to securely and rigidly fasten door and frame assemblies to building. Exposed fasteners shall

not be allowed.

C. Install/pack batt insulation in shim spaces around perimeter of door and frame assemblies, to maintain continuity of thermal barrier.

D. Install hardware in accordance with manufacturer's recommendations, using proper templates. Refer to Section 08712 for installation requirements.

E. Install glass to method required to achieve performance criteria and in accordance with workmanship and installation technique described in Section 08800.

F. Set thresholds and sub-sill in bed of sealant and secure. Install perimeter sealant and related backing materials to method required to achieve performance criteria and in accordance with workmanship and installation requirements indicated in Section 07900.

G. Adjust operating hardware for smooth operation.

3.03 TOLERANCES

A. Variation from Plane: 0.03 inches per foot maximum or 0.25 inches per 30 feet, whichever is less.

B. Misalignment of Two Adjoining Members Abutting in Plane: 0.015 inches.

3.04 CLEANING

A. Remove protective material from pre-finished aluminum surfaces.

B. Wash down exposed surfaces using a solution of mild detergent in warm water, applied with soft, clean wiping cloths. Take care to remove dirt from corners. Wipe surfaces clean.

C. Remove excess sealant by moderate use of mineral spirits or other solvent acceptable to sealant manufacturer.

3.05 SCHEDULE

A. Reference floor plans, elevations and sections for wall system location and door and frame schedule and storefront types for sizes, glazing and features.

END OF SECTION

SECTION 08520
ALUMINUM WINDOWS

PART 1 - GENERAL

1.01 WORK INCLUDED

A. Extruded aluminum windows with operating sash.

B. Operating hardware and insect screens.

C. Perimeter sealants.

1.02 RELATED WORK

A. Section 04210 - Stone Masonry System: Preparation of adjacent work to receive work of this Section.

B. Section 06100 - Carpentry Work: Wood blocking.

C. Section 07900 - Joint Sealers: Perimeter sealant and back-up materials.

D. Section 08800 - Glazing.

E. Section 09110 - Metal Stud Framing System: Studs at wall openings.

1.03 REFERENCES

A. Architectural Aluminum Manufacturers Association specification DH-A2-HP for single hung windows.

1.04 SUBMITTALS

A. Submit shop drawings and product data under provisions of Section 01340.

B. Include wall opening and component dimensions; wall opening tolerances required; general construction, anchorage methods and locations, hardware locations, and installation requirements.

1.05 QUALITY ASSURANCE

A. Installer: Company specializing in installing aluminum windows and accessories with minimum two years documented experience, and if required, manufacturer approval.

1.06 DELIVERY, STORAGE, AND HANDLING

A. Deliver, store and handle window units under provisions of Section 01620.

B. Provide wrapping or strippable coating to protect pre-finished aluminum surfaces.

1.07 WARRANTY

A. Windows furnished shall be certified as fully warranted against any defects in material or workmanship, under normal use and service, for a period of Standard warranty in accordance with General Conditions.

PART 2 - PRODUCTS

2.01 ACCEPTABLE MANUFACTURERS

A. Aluminum Single Hung Windows
   1. Manufacturer and Type: All Seasons Commercial, Inc., Bryan, TX, Ph. No: 979-823-6557
   2. Other Acceptable Manufacturers:
      a) EFCO Corporation.
      b) Peerless Products, Inc.

C. Substitutions: Under provisions of Section 01630.

2.02 MATERIALS AND ACCESSORIES

A. Aluminum Single Hung Windows: 2665 Single Hung H-AW55
   1. Frames and sash – 6063-T5 aluminum extruded allow.
   2. Fasteners – Non-corrosive and compatible with aluminum windows.
   3. Anchors, clips, and window accessories – ASTM A 123-89a or ASTM B633-85.
   4. Glazing – cured rubber tape, expanded cellular glazing tape. Sash glazing with aluminum glazing beads. See Glazing Section 08800.
   5. Condensation Resistance Factor – not less than 54, for a CRF Class C50 rating.
   6. U-Value Test – 0.64 and AAMA 1504, Class U70.
   7. Operating Force – operating force not to exceed 45 pounds after the sash is in motion.
   8. Thermal Break – continuous and uninterrupted.
   9. Hardware – white bronze positive sweep lock and keeper.
   10. Frame and sash – butt type, coped and joined by cadmium plated or s.s. screws. Joinery sealed with joint sealant per AAMA 803.3-92.
   11. Balances – must hold operable sash stationary in any open position.
   12. Sash – factory assembled and glazed.
   13. Finish – anodic finish as selected by architect.
   14. Glazing – extruded snap-in aluminum interior glazing beads with glazing as specified in Section 08800.
   15. Weather-stripping – silicone coated woven pile with polypropylene fin center compling with AAMA 702-92.
   16. Sealants – elastomeric type, elastic, non-shrinking and non-mitgrating complying with AAMA 803.3-92 and 808.3-92.

B. Insect Screens:
   1. Aluminum screen cloth
   2. Operable sections of windows.

C. Receptor Systems
   1. Two-piece snap together to anchor windows as indicated on drawings.
   2. Polyurethane thermal break design for extruded aluminum head, jamb and sub-sill.
   3. Finish to match window.

2.03 FABRICATION

A. Fabricate windows for minimum clearances and shim spacing around perimeter of assemblies yet enabling installation. Allow for thermal movement within window construction.

B. Thermal Break: The thermal break shall provide a continuous uninterrupted thermal break around the entire perimeter of the frame and all sashes, and shall not be bridged by conductors.

C. All joints of main frame and sash shall be of butt type, coped and neatly joined by means of cadmium plated or stainless steel screws anchored in an integral boss. All joinery of main frame and sash shall be sealed with joint sealant per AAMA 803.3-92.

D. Main frame and sash members shall have aluminum thickness as allowed by AAMA/NWDA I.s.2-97

E. Sash shall be joined at the corners with screws in integral screw ports.

2.04 FINISHES

A. Exposed Aluminum Surfaces: Extruded aluminum surfaces conforming to AAMA 2603. Application of finish must be by window manufacturer for all components to ensure match.

B. Apply one coat of bituminous paint to concealed aluminum surfaces in contact with cementitious or dissimilar materials.

PART 3 - EXECUTION

3.01 INSPECTION

A. Verify wall openings and chink with insulation, if necessary, to avoid excessive air infiltration from wall cavity.

B. Beginning of installation means acceptance of existing conditions.

3.02 INSTALLATION

A. Install windows in accordance with manufacturer's recommendations and approved shop drawings.

B. Install sufficient corrosion resistant anchorage devices to securely and rigidly fasten windows to building, without causing detrimental effects to shape or performance.

C. Provide required blocking and support and align window frame plumb and level, free of warp, twist or bow. Maintain dimensional tolerances aligning with adjacent work.

E. Install sealants and related backing materials around perimeter of windows and all exterior joinery pursuant with sealant manufacturer’s recommendations.

F. Install insect screens with thumb latches arranged to hold frames tight against window frame at

entire.

3.03 ADJUSTING AND CLEANING

A. Remove protective material from pre-finished aluminum surfaces.

B. Wash down exposed surfaces using a solution of mild detergent in warm water, applied with soft, clean wiping cloths. Take care to remove dirt from corners. Wipe surfaces clean.

C. Remove excess sealant by moderate use of mineral spirits or other solvent acceptable to sealant manufacturer.

D. Installing contractor shall clean all aluminum surfaces promptly after installation. Report any shipping damages to architect / district personnel within 24 hours of receipt.

E. Installing contractor shall make all final adjustments to sash, balances and hardware, to insure proper operation and weather-ability, and shall touch up any minor blemishes.

F. Installing contractor shall clean glass, after installation, to remove any labels, excess glazing compound or sealant and any other foreign substances. Initiate protection and precautions as required insuring that windows are not misused or abused by other trades.

END OF SECTION

0SECTION 08710
FINISH HARDWARE

PART 1 - GENERAL

1.01 WORK INCLUDED

A. Hardware for wood, hollow steel, aluminum storefront and overhead doors.

B. Thresholds and Weatherstripping.

1.02 RELATED WORK

A. Section 08111 - Standard Steel Doors and Frames: Hollow metal doors.

B. Section 08210 - Wood Doors.

C. Section 08360 - Sectional Overhead Doors: Hardware for same.

D. Section 08410 - Aluminum Entrances and Storefronts: Hardware for same.

E. Section 15936 - Air Inlets and Outlets: Door louvered grilles.

1.03 REFERENCE STANDARDS

A. ANSI A115.2 - Door and Frame Preparation for Bored or Cylindrical Locks for 1-3/4 inch Doors.

B. ANSI A115.5 - Frame Preparation for 181 & 190 Series Deadlock Strikes.

C. ANSI A156.1 - Butts and Hinges.

D. ANSI A156.2 - Locks and Lock Trim.

E. ANSI A156.4 - Door Controls (Closers).

F. ANSI A156.6 - Architectural Door Trim.

1.04 COORDINATION

A. Coordinate work of this Section with other directly affected sections involving manufacturer of any internal reinforcement for door hardware.

1.05 SUBMITTALS

A. Submit schedule, shop drawings and product data under provisions of Section 01340.

B. Indicate locations and mounting heights of each type of hardware.

C. Provide product data on specified hardware.

1.06 OPERATION AND MAINTENANCE DATA AND ACCESSIBILITY REQUIREMENTS

A. Provide manufacturer's parts list and maintenance instructions for each type of hardware supplied and necessary wrenches and tools required for proper maintenance of hardware.

B. All doors with closers shall be furnished with a door closer having an adjustable spring and closing speed adjustment that will comply with the current accessibility requirements for the State of Texas.

1.07 DELIVERY, STORAGE AND HANDLING

A. Deliver, store and protect products.

B. Package hardware items individually; label and identify package with door opening code to match hardware schedule.

PART 2 - PRODUCTS

2.01 HARDWARE

A. Provide items as listed in schedule at end of this section, complete to function as intended.

B. Substitutions: Under provisions of Section 01630.

2.02 ACCEPTABLE MANUFACTURERS

A. Standard Manufacturers: Best (B), Hager (H), Vistawall (V), Adams-Rite (AR), Sargent (S), Dorma (D), Russwin (R), Trimco (T), Pemko (P), Knape & Vogt (K&V), Ives (I) and National Guard Products (NGP).

B. Other Acceptable Manufacturers: Lawrence, McKinney, Stanley, H. Soss and Company, L.C.N., Norton, Yale, Schlage, Corbin, Falcon, EPCO, Grant, Reese, Zero.

2.03 KEYING

A. Establish a master key system for this project manufactured by Best Lock Corporation – PKS to match existing system. Keying designation as directed by the Architect/Engineer.

B. Furnish One (1) grandmaster keys, six (6) master keys and three (3) keys for each lock.

2.04 FINISHES

A. Finishes are identified in Schedule at end of this Section.

PART 3 - EXECUTION

3.01 INSPECTION

A. Verify that doors /frames are ready to receive work and dimensions as indicated on shop drawings.

B. Beginning of installation means acceptance of existing conditions.

3.02 INSTALLATION

A. Install hardware in accordance with manufacturer's instructions.

B. Use templates provided by hardware item manufacturer.

C. Adjust hardware for smooth operation.

3.03 HARDWARE SCHEDULE

A. All door hardware shall fully comply with the latest version of Texas Accessibility Standards (TAS) of the Architectural Barriers Act, Article 9102, Texas Civil Statutes.

Heading No. 1

1 Door #101, Exterior to Reception 101	RHR
1-3/4" Aluminum X Alum. 3' - 0" x 7' - 0"	
1-1/2 pair butts BB1191, 26D, 4 - 1/2" x 4 -1/2" NRP	(H)
1 each deadlock MS1851A w/4001 strike	(AR)
1 each cylinder, 26D	(B)
1 each door closers P -2820 US26Dx822 –10	(R)
1 each doorstop 1214 ES 26D Floor Stop	(T)
1 each push bar, type specified in Section 08410	(V)
1 each door pull, type specified in Section 08410	(V)
1 each threshold, type specified in Section 08410	(V)
1 each bottom rail weather-stripping, type specified in Section 08410	(V)
1 each panic hardware, ED 5200 x T1355 Rim ED, 32D	(D)

Heading No. 2

1 Door #103, Corridor 110 to Assist. Engineer	RH
1 Door #104, Corridor 110 to Area Engineer	LH
1 Door #107, Corridor 110 to Conference Rm 107	RH
1 Door #114A, Reception 101 to Meeting Room 114	LHR
1 Door #119, Corridor 118 to Maintenance Supervisor 119	LH
1 Door #120, Corridor 118 to Assistant Maintenance	LH
1 Door #122, Corridor 118 to Maintenance Crew	LH
1-3/4" WD X WD 3' - 0" x 7' -0"	
1 each 1-1/2 pair butts BB1279 26D 4 -1/2" x 4 -1/2"	(H)
1 each classroom 73KC, TR 15D,lever lock, 26D	(B)
1 each doorstops 1214ES, 26D Floor Stop	(T)
3 each silencers 1229A	(T)

Heading No. 3

1 Door #111 Corridor 110 to Women 111	LH
1 Door #112, Corridor 110 to Men 112	RH
1 Door #115 Corridor 118 to Women 115	LH
1 Door #117, Corridor 118 to Men 117	RH

1-3/4" WD X WD 3' - 0" x 7' - 0"

1 each 1 ½ pair butts BB1279 26D, 4-1/2" x 4-1/2"	(H)
1 each push plate #1001-3 4"x16" 32D	(T)
1 each pull handle #1059-3 4"x16" 32D	(T)
1 each door closers DC 2200 X 17754 (mount pull side)	(R)
1 each doorstop 1214ES 26D	(T)
1 each kickplate #1029 8" x 34" 32D	(T)

Heading No. 4

1 Door # 105, Corridor 110 to Water Heater 105	LHR
1 Door # 109, Corridor 110 to Data Telecom 109	RH
1 Door # 113, Corridor 110 to Electrical 113	LH

1-3/4" WD x WD 3' - 0" x 7' - 0"

1 each 1 ½ pair butts BB1279, 26D, 4-1/2" x 4-1/2"	(H)
1 each 73KC TD 150 53 lever lock, 26D	(B)
1 each doorstop 1214ES 26D Floor Stop	(T)
3 each silencers 1229A	(T)

Heading No. 5

1 Door #106B Exterior to Engineering 106	RHR
1 Door #106C Exterior to Engineering 106	RHR
1 Door # 110 Exterior to Corridor 110	LHR
1 Door # 114B Exterior to Meeting Room 114	RHR
1 Door # 123D Exterior to Equipment Shop 123	RHR
1 Door # 130A Exterior to Laboratory 130	RHR
1 Door # 130B Exterior to Laboratory 130	RHR
1 Door # 136 Exterior to Material Storage 136	LHR
1 Door # 137C Exterior to General Storage 137	RHR
1 Door # 140A Exterior to Equipment Storage 140	LHR
1 Door # 140L Exterior to Equipment Storage 140	RHR

1 -3/4" HM x HM 3' - 0" x 7' - 0"

1 each 1 1/2 pair butts BB1279, 26D, 4-1/2" x 4 -1/2"	(H)
1 each 35H7, 15S, lever mortise lockset, 26D	(B)
1 each doorstop 1214ES, 26D Floor Stop	(T)
1 each panic hardware, ED 5200 x T 1355 Rim ED, 32D	(R)
1 each door closer DC 2210 x 17754 (mount push side)	(R)
1 each threshold 350 x 3' AL	(P)
1 each automatic door bottom 430CR	(P)
Weatherstrip 164 AV x 3070 AL	(P)
3 each silencers 1229A	(T)

Heading No. 6

1 Door #102 Corridor 110 to Record Storage 102	RH
1 Door #106A Corridor 110 to Engineer 106	RH
1 Door #108 Corridor 110 to Supply Storage 108	RH
1 Door #116 Corridor 118 to Janitor 116	LH
1 Door #121 Corridor 118 to Stock Room 121	LH

1-3/4" WD x WD 3' - 0" x 7' - 0"

1 each 1-1/2 pair butts BB1279 26D 4 -1/2" x 4 -1/2"	(H)
1 each classroom 73 KC 7R 15D 53, lever lock, 26D	(B)
each doorstops 1214ES, 26D Floor Stop	(T)
3 each silencers 1229A	(T)

Heading No. 7

1 Door #123B	Exterior to Equipment Shop 123	ROLLING
1 Door #123C	Exterior to Equipment Shop 123	ROLLING
1 Door #124B	Exterior to Shop Storage 124	ROLLING
1 Door #134B	Exterior to Laboratory Storage 134	ROLLING
1 Door #137A	Exterior to General Storage	ROLLING
1 Door #137B	Exterior to General Storage	ROLLING
1 Door #140C	Exterior to Equipment Storage 140	ROLLING
1 Door #140D	Exterior to Equipment Storage 140	ROLLING
1 Door #140E	Exterior to Equipment Storage 140	ROLLING
1 Door #140F	Exterior to Equipment Storage 140	ROLLING
1 Door #140G	Exterior to Equipment Storage 140	ROLLING
1 Door #140H	Exterior to Equipment Storage 140	ROLLING
1 Door #140J	Exterior to Equipment Storage 140	ROLLING
1 Door #140K	Exterior to Equipment Storage 140	ROLLING

1 each cylinder 26D	(B)
1 each chain hoist	
Balance of hardware by door suppliers	
Refer to Door Schedule for door sizes	

Heading No. 8

1 Door #124A Equipment Shop 123 to Shop Storage 124	LHR & RHR
1 Door #135 Laboratory Storage 134 to Storage 135	LHR & RHR

1-3/4" HM x HM 3' - 0" x 7' - 0"

1 each 1-1/2 pair butts BB1279 26D 4 -1/2" x 4 -1/2"	(H)
1 each classroom 73 KC 7R 15D 53 lever lock, 26D	(B)
1 each door closer 2800 26D SNB	(R)
1 each doorstops 1214ES, 26D	(T)
Head and Foot Flush Extension Bolts #3917	(T)
3 each silencers 1229A	(T)

Heading No. 9

1 Door #123A Corridor 118 to Equipment Shop 123	RH
1 Door #131 Lab.130 to survey storage 131	LH
1 Door #132 Lab 130 to oven 132	LH
1 Door #134A Lab 130 to Lab. Stor. 134	LH
1 Door #133 Lab Stor. 134 to Dust 133	LH

1-3/4" HM x HM 3' - 0" x 7' - 0"

1 each 1-1/2 pair butts BB1279 26D 4 -1/2" x 4 -1/2"	(H)

1 each classroom 73 KC 7R 15D 53 lever lock, 26D	(B)
1 each doorstops 1214ES, 26D floor stop	(T)
3 each silencers 1229A	(T)

END OF SECTION

SECTION 08800
GLAZING

PART 1 - GENERAL

1.01 SUMMARY

A. Provide glazing at the following locations:
   1. Exterior windows
   2. Exterior entrances and storefront
   3. Interior windows and glazed openings
   4. Doors
   5. Mirrors

1.02 SUBMITTALS

A. Submit for approval samples, shop drawings, product data, mock-ups, warranty, test reports, maintenance data, and extra stock.

1.03 QUALITY ASSURANCE

A. Comply with governing codes and regulations. Provide products of acceptable manufacturers that have been in satisfactory use in similar service for three years. Use experienced installers. Deliver, handle, and store materials in accordance with manufacturer's instructions.

B. Testing: Glazing performance.

1.04 WARRANTY

A. Glass Warranties:
   1. Insulating Glass: Manufacturer’s 10-year warranty.
   2. Mirror Glass: Manufacturer’s 10 year warranty.

PART 2 - PRODUCTS

2.01 MATERIALS

A. Manufacturers: AFG Industries, Cardinal, Libby Owens Ford, Viracon or approved equal.

B. Glass:
   1. Primary Glass Products: Clear float and wire glass, ASTM C 1036.
   2. Heat-Treated Glass Products: Tempered glass, ASTM C 1048.
   3. Sealed Insulating Glass Units: ASTM E 774, Class A.
   4. Mirrors: Silvering and protective coatings.

C. Glazing Accessories:
   1. Elastomeric glazing sealants
   2. Preformed glazing tapes
   3. Glazing gaskets
   4. Setting blocks, spacers, and compressible filler rods

5. Mirror adhesive

PART 3 - EXECUTION

3.01 INSTALLATION

A. Inspect framing and report unsatisfactory conditions in writing.

B. Comply with FGMA "Glazing Manual" and manufacturers instructions and recommendations. Use manufacturer's recommended spacers, blocks, primers, sealers, gaskets and accessories.

C. Install sealants to provide complete wetting and bond and to create a substantial wash away from glass.

D. Set mirrors on stainless steel clips and adhere to wall with mirror adhesive.

E. Remove and replace damaged glass and glazing. Wash, polish and protect all glass supplied under this section.

3.02 SCHEDULE

A. Glazing Schedule:
   1. Aluminum Windows: 1-inch (25-mm) thick insulating unit tinted glass.
   2. Storefront: 1-inch (25-mm) thick insulating unit, clear tempered glass.
   3. Entrances: 1-inch (16-mm) thick insulating unit, clear glass.
   4. Mirrors: 1/4-inch (6-mm) plate glass.
   5. Doors: Tempered glass.

END OF SECTION

SECTION 09110
METAL STUD FRAMING SYSTEM

PART 1 - GENERAL

1.01 WORK INCLUDED

A. Formed metal stud framing at interior and exterior locations.

B. Framing accessories.

1.02 RELATED WORK

A. Section 04210 - Stone Masonry

B. Section 06100 - Carpentry Work: Wood blocking.

C. Section 07213 - Fibrous Batt Insulation: Insulation within stud framing.

D. Section 09260 - Gypsum Board Systems: Metal studs for partitioning.

1.03 REFERENCES

A. ASTM A525 - General Requirements for Sheet Steel, Zinc-Coated (Galvanized) by the Hot-Dip Process.

B. ASTM C645 - Non-load Bearing Steel Studs, Runners and Rigid Furring Channels for Screw Application of Gypsum Board.

C. ASTM C754 - Installation of Steel Framing Members to Receive Screw Attached Gypsum Wallboard, Backing Board, or Water-Resistant Backing Board.

1.04 SYSTEM DESCRIPTION

A. Metal stud framing system for exterior walls, with batt type thermal insulation specified in Section 07213, and interior gypsum board specified in Section 09260.

B. Metal stud framing for interior walls with batt type acoustical insulation specified in Section 07213, and interior gypsum board specified in Section 09260.

C. Design system to accommodate construction tolerances, deflection of building structural members, and clearances of intended openings.

1.05 QUALITY ASSURANCE

A. Perform the work in accordance with ASTM C754.

1.06 COORDINATION

A. Coordinate the work with all sections referencing this section as required.

PART 2 - PRODUCTS

2.01 MATERIALS

A. Studs:ASTM A525 Non-load bearing rolled steel, galvanized, channel shaped, 6, and 3-5/8 inches wide, 22 gauge thick, punched for utility access. Provide 22 gauge studs at exterior walls and at interior walls.

B. Runners: Of same material and finish as studs.

C. Furring Channels: ASTM C 645, 20 gauge (.0329 inch) with manufacturer's standard corrosion-resistant coating.

D. Auxiliary Framing Components: Furring brackets, resilient furring channels, Z furring members, and non-corrosive fasteners.

E. Fasteners: ASTM C646. Self-drilling, self-tapping screws.

F. Wood Blocking: Construction grade softwood moisture resistant treated. Reference Section 06001 - Carpentry Work.

PART 3 - EXECUTION

3.01 EXAMINATION

A. Verify that conditions are ready to receive work.

B. Verify that measurements are as shown on drawings.

C. Verify that rough-in utilities are in proper location.

D. Beginning of installation means installer accepts existing conditions.

3.02 ERECTION

A. Install in accordance with ANSI/ASTM C754.

B. Metal Stud Spacing: 16 inches on center.

C. Partition Height: Full height to roof construction (metal deck) above suspended ceiling as scheduled in the drawings and indicated on the floor plans.

D. Align and secure top and bottom runners at not more than 24 inches o.c.

E. Apply acoustic sealant or tape under runners at all interior walls scheduled to receive batt

insulation for acoustical purposes.

F. Fit runners under and above openings, secure intermediate studs at spacing of wall studs.

G. Install studs vertically, not more than 2 inches from abutting construction, each side of openings, and at corners.

H. Connect studs to tracks using fastener method.

I. Construct corners using minimum three (3) studs.

J. Double studs at wall openings, door/window jambs, not more than 2 inches each side of openings.

K. Brace stud framing system as required and make rigid.

L. Door Opening Framing: Studs shall be securely anchored to the jamb and head anchor clips of each frame by bolt screw attachment. Over metal frames, a cut-to-length section of runner track with a web-flange bend at each end shall be placed horizontally and securely screw-attached to the adjacent vertical studs. A cut-to-length stud shall be positioned at the location of vertical joints over the door frame header extending to the ceiling runner. A stud nested with a floor runner shall be used at each door jamb.

M. Coordinate erection of studs with installation of service utilities. Align stud web openings.

N. Coordinate installation of bucks, anchors, blocking, electrical and mechanical work to be placed in or behind stud framing.

O. Coordinate erection of stud system with requirements of door and window frame supports.

P. Stud splicing <u>not</u> permissible.

Q. Maintain clearance under structural building members to avoid deflection transfer to non-load bearing studs. Provide extended leg ceiling runners.

R. Blocking: Install blocking as required for support of plumbing fixtures, toilet partitions, wall cabinets, toilet accessories, and hardware.

S. Coordinate placement of batt insulation in stud spaces made inaccessible after stud framing erection.

3.03 TOLERANCES

A. Install members to provide surface plane with maximum variation of 1/8 inch in 10 feet in any direction.

END OF SECTION

SECTION 09220
PORTLAND CEMENT PLASTER

PART 1 GENERAL

1.1 SUMMARY

A. Section includes Portland cement plaster system.

B. Related Sections:
1. Section 09205 - Furring and Lathing: Metal furring and lathing for plaster base.

1.2 REFERENCES

A. ASTM International:
1. ASTM C150 - Standard Specification for Portland Cement.
2. ASTM C847 - Standard Specification for Metal Lath.
3. ASTM C926 - Standard Specification for Application of Portland Cement-Based Plaster.
4. ASTM C933 - Standard Specification for Welded Wire Lath.
5. ASTM C979 - Standard Specification for Pigments for Integrally Colored Concrete.
6. ASTM C1032 - Standard Specification for Woven Wire Plaster Base.
7. ASTM C1063 - Standard Specification for Installation of Lathing and Furring to Receive Interior and Exterior Portland Cement-Based Plaster.
8. ASTM C1328 - Standard Specification for Plastic (Stucco) Cement.

B. Portland Cement Association:
1. PCA - Portland Cement Plaster (Stucco) Manual.

1.3 PERFORMANCE REQUIREMENTS

A. Fabricate vertical elements to limit finish surface to 1: 180 deflection under lateral point load of 100 lbs .

1.4 SUBMITTALS

A. Section 01330 - Submittal Procedures: Submittal procedures.

B. Product Data: Submit data on plaster materials, characteristics and limitations of products specified.

C. Samples: Submit two samples, 12" x 12" in size illustrating finish color and texture.

1.5 QUALITY ASSURANCE

A. Perform Work in accordance with ASTM C926. PCA Portland Cement Plaster (Stucco) Manual.

1.6 QUALIFICATIONS

A. Manufacturer: Company specializing in manufacturing products specified in this section with minimum three years documented experience.

B. Installer: Company specializing in performing Work of this section with minimum three years documented experience.

1.7 MOCKUP

A. Section 01400 - Quality Control Procedures: Requirements for mockup.

B. Construct mock-up, 3 feet long by 3 feet wide, exterior wall system illustrating surface finish and texture

C. Locate where directed by Architect/Engineer.

D. Remove mockup when directed by Architect/Engineer.

1.8 PRE-INSTALLATION MEETINGS

A. Section 01300 - Administrative Requirements: Pre-installation meeting..

B. Exterior Plaster Work: Do not apply cement plaster when ambient temperature is less than 40 degrees F

C. Exterior Plaster Work: When ambient temperature is less than 40 degrees F, heat sand and mixing water to minimum of 70 degrees F, and provide temporary protection and heat in plastered area for 24 hours.

PART 2 PRODUCTS

2.1 PORTLAND CEMENT PLASTER

A. Manufacturers:
1. W.R. Bonsal Co.
2. The Quikrete Companies.
3. United States Gypsum Co.

2.2 COMPONENTS:

A. Plaster Base Materials:

1. Premixed Base Coat:

2. Cement: ASTM C150, Type I Portland cement.
3. Lime: ASTM C206, Type S.
4. Aggregate: In accordance with ASTM C897. PCA Plaster (Stucco) Manual. Aggregate: Natural sand.
5. Water: Clean, fresh, potable and free of mineral or organic matter capable of affecting plaster.

B. Plaster Finish Materials:

1. Premixed Finishing Coat:
2. Cement: As specified for plaster base coat, gray
3. Lime: As specified for plaster base coat.
4. Color Pigment: ASTM C979 mineral oxide
5. Water: Clean, fresh, potable, and free of matter capable of affecting plaster.
6. Metal Lath and Accessories: Specified in Section 09205.
7. Expanded Metal Lath: ASTM C847, galvanized, diamond mesh self-furring.
8. Woven Wire Plaster Base: ASTM C1032, self-furring having 1 inch openings.
9. Welded Wire Lath: ASTM C933, self-furring.
10. Corner Bead: Formed sheet steel, depth governed by plaster thickness, maximum possible lengths, expanded metal flanges, with bullnosed edges; galvanized.: Base Screed: Formed sheet steel, depth governed by plaster thickness, maximum possible lengths, expanded metal, with beveled edge; galvanized. Foundation Weep Screed: Formed sheet steel, depth governed by plaster thickness, maximum possible lengths, expanded metal flanges, with beveled edge; galvanized. This bead is ASTM C1063 as part of a drainage system for exterior stucco applications. The "V" stop is punched with holes primarily intended as keying mechanisms.
11. Corner Mesh: Formed sheet steel, minimum 0.018 inch thick, expanded flanges shaped to permit complete embedding in plaster, minimum 2 inch size; galvanized.
12. Strip Mesh: Expanded metal lath, minimum 0.018 inch thick, 2 inch wide x 24 inch long; galvanized.
13. Control and Expansion Joint Accessories: Formed sheet steel “j” profile, 2 inch expanded metal flanges each side, galvanized
14. Anchorage: Tie wire, nails, and other metal supports, of type and size to suit application; to rigidly secure materials in place, galvanized.
15. Fasteners: ASTM C1002, self drilling, self tapping screws.

2.3 MIXES

A. Base Coats: Mix and proportion cement plaster base coat in accordance with ASTM C926, and in accordance with PCA Portland Cement Plaster (Stucco) Manual.
   1. Fiber Reinforcement: Add glass fibers to [base coats at rate of 94 lbs per sack of cement.

B. Finish Coat: Mix and proportion cement plaster finish coat in accordance with ASTM C926, and in accordance with PCA Portland Cement Plaster (Stucco) Manual.

C. Mix only as much plaster as can be used prior to initial set.

D. Add color pigments to finish coat.

E. Mix materials dry, to uniform color and consistency, before adding water.

F. Protect mixtures from freezing, frost, contamination, and excessive evaporation.

G. Do not re-temper mixes after initial set has occurred.

PART 3 EXECUTION

3.1 EXAMINATION

A. Section 01300 - Administrative Requirements: Coordination and project conditions.

B. Masonry: Verify joints are cut flush and surface is ready to receive work of this section. Verify no bituminous or water repellent coatings exist on masonry surface.

C. Metal Lath and Accessories: Verify lath is flat, secured to substrate, and joint and surface perimeter accessories are in place.

3.2 PREPARATION

A. Dampen masonry surfaces to reduce excessive suction.

B. Clean concrete surfaces of foreign matter. Clean surfaces using acid solutions, solvents, or detergents. Wash surfaces with clean water.

3.3 INSTALLATION

A. Installation of Lathing Materials:
1. Install metal lath in accordance with ASTM C1063.

B. Installation of Accessories:
1. Install accessories in accordance with ASTM C1063.
2. Place corner bead at external wall corners; fasten at outer edges of lath only.
3. Place strip mesh diagonally at corners of lathed openings. Secure rigidly in place.
4. Place casing beads at terminations of plaster finish. Butt and align ends. Secure rigidly in place.
5. Install door frames plumb and level in opening. Secure rigidly in place.

C. Control And Expansion Joints:

1. Install exterior contraction joints after initial set, scribed every 3 feet in each direction by cutting through 2/3 of cement plaster depth, neatly, in straight lines.
2. For horizontal exterior surfaces, install control and expansionjoints not to exceed 100 sq. ft.

3. For vertical exterior surfaces install control and expansion joints not to exceed 144 sq. ft.
4. Establish control and expansion joints with specified joint device.

D. Plastering:
1. Apply plaster in accordance with ASTM C926. PCA Plaster (Stucco) Manual.
2. Apply base coat to nominal thickness of 3/8 inch , brown coat to nominal thickness of 3/8 inch, and finish coat to nominal thickness of 1/8 inch over metal self-furring lath.
3. Moist cure base and brown coats. Apply brown coat immediately following initial set of scratch coat.
4. After curing, dampen previous coat prior to applying finish coat.
5. Apply finish coat to indicated color and texture with selected color in accordance with PCA Portland Cement Plaster (Stucco) Manual.
6. Avoid excessive working of surface. Delay troweling as long as possible to avoid drawing excess fines to surface.
7. Moist cure finish coat for minimum period of 48 hours.

3.4 ERECTION TOLERANCES

A. Section 01400 - Quality Requirements: Tolerances.

B. Maximum Variation from Flat Surface: 1/8 inch in 10 feet

3.5 ADJUSTING

A. Section 01700 - Execution Requirements: Testing, adjusting, and balancing.

B. Remove damaged or defective plaster by cutting and replace with specified materials to match adjacent plaster.

3.6 SCHEDULES

A. Exterior addition area: Three coat cement plaster over metal lath, course float finish.

END OF SECTION

SECTION 09260
GYPSUM BOARD SYSTEMS

PART 1 - GENERAL

1.01 WORK INCLUDED

A. Gypsum board.

B. Taped and sanded joint treatment.

C. Exterior gypsum sheathing.

1.02 RELATED WORK

A. Section 06100 - Carpentry Work: Wood blocking for support of wall mounted items/fixtures.

B. Section 07160 - Bituminous Dampproofing.

C. Section 07213 - Fibrous Batt Insulation: Insulation within stud framing.

D. Section 08110 - Standard Steel Doors and Frames.

E. Section 09110 - Metal Stud Framing System.

F. Section 09900 - Painting: Surface finish.

G. Sections 15000 - 16000 - Mechanical and Electrical: Requirements and components built into work of this Section.

1.03 REFERENCES

A. ANSI/ASTM C36 - Gypsum Wallboard.

B. ANSI/ASTM C79 - Gypsum Sheathing Board.

C. ANSI/ASTM C475 - Joint Treatment Materials for Gypsum Wallboard Construction.

D. ANSI/ASTM C646 - Steel Drill Screws for the Application of Gypsum Sheet Material to Light Gage Steel Studs.

E. GA-201 - Gypsum Boards for Walls and Ceilings.

F. GA-216 - Recommended Specifications for the Application and Finishing of Gypsum Board.

1.04 SUBMITTALS

A. Submit product data under provisions of Section 01340.

B. Provide product data on gypsum board, joint tape and decorative finish.

C. Submit manufacturer's installation instructions under provisions of Section 01340.

D. Coordinate this work with the installation of batt insulation and mechanical and electrical work which is to be placed at or within framing. Allow such items to be installed or incorporated, if required, before start of gypsum board installation.

PART 2 - PRODUCTS

2.01 ACCEPTABLE MANUFACTURERS - GYPSUM BOARD SYSTEM

A. Gold Bond Building Products.

B. Georgia-Pacific Corp.

C. Gemstar Gypsum Products Co.

D. United Stated Gypsum.

E. Substitutions: Under provisions of Section 01630.

2.02 GYPSUM BOARD MATERIALS

A. Fire-Rated Gypsum Board: ANSI/ASTM C36; fire resistive type, UL rated; 5/8 inch thick, maximum permissible length; ends square cut, tapered and rounded edges.

B. Exterior Gypsum Sheathing Board: ANSI/ASTM C79; moisture resistant and fire resistant type; 1/2 inch thick, maximum permissible length; ends square cut, v-shaped tongue and grooved edges; water repellent paper faces.

C. Water Resistant Gypsum Backing Board: ASTM C 630, fire-rated types as required, 5/8-inch typical thickness.

D. Felts: #15 (No. 15) felt paper as specified in Section 07160.

2.03 ACCESSORIES

A. Acoustical Insulation: Refer to Section 07213, Fibrous Batt Insulation.

B. Acoustical Sealant: Refer to Section 07900, Joint Sealers.

C. Corner Beads: Metal type.

D. Edge Trim: GA-201 and GA-216; Type L bead.

E. Joint Materials: ANSI/ASTM C475; reinforcing tape, joint compound, adhesive, water, and fasteners.

PART 3 - EXECUTION

3.01 INSPECTION

A. Verify that site conditions are ready to receive work.

B. Beginning of installation means acceptance of existing surfaces.

3.02 METAL STUD INSTALLATION

A. Install studding in accordance with ANSI/ASTM C754.

B. Metal Stud Spacing: 16 inches on center.

C. Partition Heights: To suspended ceilings or full height to floor or roof construction above as scheduled. Install additional bracing as required for partitions extending above ceiling.

D. Door Opening Framing: Studs shall be securely anchored to the jamb and head anchor clips of each frame by bolt screw attachment. Over metal frames, a cut-to length section of runner track with a web-flange bend at each end shall be placed horizontally and securely screw-attached to the adjacent vertical studs. A cut-to-length stud shall be positioned at the location of vertical joints over the door frame header extending to the ceiling runner. A stud nested with a floor runner shall be used at each door jamb.

E. Blocking: Install blocking for support of plumbing fixtures, toilet partitions, wall cabinets, toilet accessories, and hardware.

F. Coordinate installation of bucks, anchors, blocking, electrical and mechanical work placed in or behind partition framing.

3.03 GYPSUM BOARD INSTALLATION

A. Install gypsum board in accordance with recommendations GA-201 and GA-216.

B. Erect single layer fire rated gypsum board vertically, with edges and ends occurring over firm bearing.

C. Erect exterior gypsum sheathing horizontally, with edges butted tight and ends occurring over firm bearing. Seal all cut edges of gypsum sheathing to prevent wicking of moisture within cavity. Install 15# asphalt felt paper over sheathing horizontally with 4 inch overlap.

D. Use screws when fastening gypsum board to metal furring or framing.

E. Edge Trim: GA-201 and GA-216; Type L bead.

F. Joint Materials: ANSI/ASTM C475; reinforcing tape, joint compound, adhesive, water, and fasteners.

PART 3 - EXECUTION

3.01 INSPECTION

A. Verify that site conditions are ready to receive work.

B. Beginning of installation means acceptance of existing surfaces.

3.02 GYPSUM BOARD INSTALLATION

A. Install gypsum board in accordance with recommendations GA-201 and GA-216.

B. Erect single layer fire rated gypsum board vertically, with edges and ends occurring over firm bearing.

C. Erect exterior gypsum sheathing horizontally, with edges butted tight and ends occurring over firm bearing. Seal all cut edges of gypsum sheathing to prevent wicking of moisture within cavity.

D. Install 15# asphalt felt paper, starting at the bottom, over sheathing horizontally with 4 inch overlaps. Coordinate with dampproofing and waterproofing work, Section 07160, to provide continuous, positive drainage along surface.

E. Use screws when fastening gypsum board to metal furring or framing.

F. Place corner beads at external corners. Use longest practical lengths.

G. Place edge trim where gypsum board abuts dissimilar materials.

3.03 JOINT TREATMENT

A. Tape, fill, and sand exposed joints, edges, and corners to produce smooth surface ready to receive finishes.

B. Feather coats onto adjoining surfaces so that camber is maximum 1/16 inch.

C. Erect in accordance with manufacturer's instructions.

3.04 TOLERANCES

A. Maximum Variation from True Flatness: 1/8 inch in 10 feet in any direction.

END OF SECTION

SECTION 09300
CERAMIC TILE

PART 1 - GENERAL

1.01 SUMMARY

A. Interior Tile:
   1. Wall tile over tile backer board at wet areas.
   2. Floor tile over concrete slab.

1.02 SUBMITTALS

B. Submit for approval samples, product data, and mock-ups.

1.03 QUALITY ASSURANCE

A. Comply with governing codes and regulations. Provide products of acceptable manufacturers which have been in satisfactory use in similar service for three years. Use experienced installers. Deliver, handle, and store materials in accordance with manufacturer's instructions.

B. Tile: ANSI A 137.1

C Tile Setting Materials: ANSI 118 series standard specifications.

D. Tile Installation: ANSI 108 series standard specifications and Tile Council of America, Handbook for Ceramic Tile Installation.

PART 2 - PRODUCTS

2.01 MATERIALS

A. Manufacturers of Tile: American Olean, Dal-Tile, Summitville Tiles, United States Ceramic Tile Co. or approved equal.

B. Manufacturers of Setting Materials: American Olean, Bostick Construction Products, Laticrete, Mapei Corp or approved equal.

C. Unglazed Ceramic Mosaic Tile:
   1. Type: Porcelain.
   2. Size: 2 by 2 inches.
   3. Thickness: 1/4 inch nominal.
   4. Face: Plain face with cushion edges.

D. Glazed Ceramic Mosaic Tile:
   1. Type: Porcelain factory-mounted flat tile.
   2. Size: 2 by 2 inches.
   3. Thickness: 1/4 inch nominal.
   4. Face: Plain face with cushion edges.

E. Tile Accessories:
   1. Matching trim units.
   2. Marble thresholds.

F. Setting Materials:
   1. Dry-set Portland cement mortar.
   2. Latex-Portland cement mortar.

G. Grout:
   1. Sand-Portland cement grout.
   2. Latex-Portland cement grout.

H. Setting Accessories:
   1. Membrane waterproofing under tile, ANSI A 118.10.

PART 3 - EXECUTION

3.01 INSTALLATION

A. SCHEDULE Comply with Tile Council of America and ANSI Standard Specifications for Installation for substrate and installation required. Comply with manufacturer's instructions and recommendations.

B. Lay tile in grid pattern with alignment grids. Layout to provide uniform joint widths and to minimize cutting; do not use less than 1/2 tile units.

C. Provide sealant joints where recommended by TCA and approved by Architect.

D. Grout and cure, clean and protect.

3.02 SCHEDULE

E. Tile Schedule:
   1. Toilet Room Walls: Glazed ceramic mosaic tile over tile backer board with thin-set latex-modified cement mortar and latex-Portland cement grout.
   2. Toilet Room Floors: Unglazed ceramic mosaic tile over concrete slab with latex-Portland cement mortar and latex-Portland cement grout.

END OF SECTION

SECTION 09510
SUSPENDED ACOUSTICAL CEILINGS

PART 1 - GENERAL

1.01 WORK INCLUDED

A. Suspended metal grid ceiling system.

B. Acoustical panels.

C. Non-fire rated assembly.

D. Perimeter trim.

1.02 RELATED WORK

A. Section 15936 - Air Inlets and Outlets: Air diffusion devices in ceiling system.

B. Section 16500 - Lighting: Light fixtures in ceiling system.

1.03 REFERENCES

A. ASTM C635 - Metal Suspension Systems for Acoustical Tile and Lay-in Panel Ceilings.

1.04 QUALITY ASSURANCE

A. INSTALLER: Company specializing in performing the work of this section with two years minimum documented experience.

1.05 SUBMITTALS

A. Submit product data under provisions of Section 01340.

B. Provide product data on metal grid system components and acoustic units.

1.06 ENVIRONMENTAL REQUIREMENTS

A. Maintain uniform temperature of minimum 60 degrees F and humidity of 20 to 40 percent prior to, during, and after installation.

1.07 SEQUENCING/SCHEDULING

A. Do not install acoustical ceiling until building is enclosed, sufficient heat is provided, dust generating activities have terminated, and overhead work is completed, tested, and approved.

B. Schedule installation of acoustic units after interior wet work is dry.

1.08 EXTRA STOCK

A. Provide one (1) carton of panels to Owner.

PART 2 - PRODUCTS

2.01 ACCEPTABLE MANUFACTURERS - SUSPENSION SYSTEM

A. Roper Eastern Products Corporation.

B. Chicago Metallic Corporation.

C. Donn Corporation.

D. Armstrong.

E. Substitutions: Under provisions of Section 01630.

2.02 SUSPENSION SYSTEM MATERIALS

A. Grid: ASTM C635, intermediate duty, non-fire rated exposed T; all components die cut and interlocking.

B. Accessories: Splices, edge molding, hold down clips, and any other accessories required to complete and complement suspended ceiling grid system.

C. Materials/Finish: All roll formed parts are to be chemically cleansed and electro-galvanized. The steel shall then be bonderized to form a non-metallic coating to resist corrosion and form a chemical affinity for paint. All surfaces shall then receive a high-bake enamel finish. Stamped parts shall be chemically cleansed, electro-galvanized and treated with a chromate conversion coating. Perimeter surfaces shall receive a white high-bake enamel finish.

D. Support Channels and Hangers: Galvanized steel; size and type to suit application, to rigidly secure acoustic ceiling system including integral mechanical and electrical components with maximum deflection of 1/360. Hangers shall be minimum #12 galvanized wire.

2.03 ACCEPTABLE MANUFACTURERS - ACOUSTIC UNITS

A. Celotex Corporation Perforated Stippled "Safetone."

B. USG, Standard "Fissura."

C. Armstrong Corporation Fissured "Minaboard."

D. Gold Bond Corporation, Needle Perforated "Solitude Plasticrylic."

E. Substitutions: Under provisions of Section 01630.

2.04 ACOUSTIC UNIT MATERIALS

A. Acoustic Panels: Conforming to the following:
   1. Size: 24 x 24 inches.
   2. Thickness: 5/8 inches.
   3. Composition: Non-combustible mineral fiber composition.
   4. Fire Hazard Classification: 25 or less.
   5. Edge: Square.
   6. Surface Color: White.
   7. STC Range: 35-39.
   8. NRC Range: .50-.60.

PART 3 - EXECUTION

3.01 INSPECTION

A. Verify that existing conditions are ready to receive work.

B. Verify that layout of hangers will not interfere with other work.

C. Verify mechanical and electrical components are in place.

D. Beginning of installation means acceptance of existing conditions.

3.02 INSTALLATION

A. Install system in accordance with manufacturer's instructions and as supplemented in this Section to produce finished ceiling true to lines and levels and free from warped, soiled or damaged grid or lay-in panels.

B. Install system capable of supporting imposed loads to a deflection of 1/360 maximum.

C. Install after major above ceiling work is complete. Coordinate the location of hangers with other work as required.

D. Attach hanger clips or wires as required to structure above. Do not disturb installed batt insulation work or break seal. Provide additional hangers and inserts as required.

E. Hang system independent of walls, columns, ducts, pipe and conduit. Where carrying members are spliced, avoid visible displacement of face plane of adjacent members.

F. Where ducts or other equipment prevent the regular spacing of hangers, reinforce the nearest affected hangers and related carrying channels to span the extra distance.

G. Locate system in room as detailed on reflected ceiling plan.

H. Do not support components on main runners or cross runners if weight causes total dead load to exceed deflection capability. Support fixture loads by supplementary hangers located within 6 inches of each corner;

or support components independently.

I. Do not eccentrically load system, or produce rotation of runners.

J. Install edge molding at intersection of ceiling and vertical surfaces, using longest practical lengths. Miter corners. Provide edge moldings at junctions with other interruptions.

K. Fit acoustic units in place, free from damaged edges or other defects detrimental to appearance and function.

L. Lay directional patterned unit one way with pattern parallel to longest room axis. Fit border neatly against abutting surfaces.

M. Install acoustic unit level, in uniform plane, and free from twist, warp and dents.

3.03 TOLERANCES

A. Variation from Flat and Level Surface: 1/8 inch in 10 feet.

B. Variation from Plumb of Grid Members Caused by Eccentric Loads: Two degrees maximum.

END OF SECTION

SECTION 09650
RESILIENT FLOORING

PART 1 - GENERAL

1.01 WORK INCLUDED

A. Resilient Tile Flooring.

B. Resilient Base.

1.02 REFERENCES

A. FS SS - T - 312B - Tile, Floor: Rubber. Type IV - Vinyl Composition 1 - Asbestos-Free.

B. FS SS - W – 40 - Wall Base: Rubber

1.04 SUBMITTALS

A. Submit product data and samples under provisions of Section 01340.

B. Submit one 3 inch x 3 inch sized sample for each flooring material specified.

C. Submit one 4 inch x 1-3/4 inch long sample of base material specified.

1.05 OPERATION AND MAINTENANCE DATA

A. Submit cleaning and maintenance recommendations for flooring material specified.

B. Include maintenance procedures, recommended maintenance materials, and suggested schedule for cleaning, stripping and waxing.

1.06 ENVIRONMENTAL REQUIREMENTS

A. Store materials for three days prior to installation in an area of installation to achieve temperature stability.

B. Maintain minimum of 70 degrees F air temperature at flooring installation area for three days prior to, during, and for 24 hours after installation.

PART 2 - PRODUCTS

2.01 ACCEPTABLE MANUFACTURERS

A. Tarkett, "Architectural Floor Tile, Thru-Chip".

B. Armstrong, "Excelon Tile, Imperial Series".

C. Azrock Floor Products Division, Azrock Industries Inc., "Azrock, Custom Cortina".

D. Substitutions: Under provisions of Section 01630.

2.02 TILE FLOORING MATERIALS

A. Vinyl Composition Tile: FS SS – T - 312B type IV; Composition 1 - Asbestos-Free, mottled thru-chip 12 x 12 inch size x 1/8 inch thick; color selected by Architect.

2.03 BASE

A. Base: FS SS – W - 40A Type I rubber ; top set coved at areas with vinyl floor tile, 4 inch high, 1/8 inch thick, manufactured by Flexco, Burke, or Roppe, color selected by Architect. Vinyl base not acceptable.

B. Base Accessories: Premolded external corners of same material, size and color as base.

2.04 ACCESSORIES

A. Edge Strips: Standard aluminum chromium alloy strips one inch wide and beveled, and of proper depth for the tile, fastened with countersunk screws and expansion shields at 8 inches on center. Install where vinyl tile joins concrete finish floor.

B. Sub-Floor Filler: White premix latex, type recommended by flooring material manufacturer.

C. Primers and Adhesives: Water resistant, cut-back asphalt as recommended by flooring material manufacturer for specific material. Cove base adhesive shall be used to install base.

PART 3 - EXECUTION

3.01 INSPECTION

A. Verify that floor surfaces are smooth and flat with maximum variation of 1/8 inch in 10 feet and are ready to receive work.

B. Verify concrete floors are dry to a maximum moisture content of 7 percent, and exhibit negative alkalinity, carbonization or dusting.

C. Beginning of installation means acceptance of existing substrate and site conditions.

3.02 PREPARATION

A. Remove sub-floor ridges and bumps. Fill low spots, cracks, joints, holes and other defects with sub-floor filler.

B. Apply, trowel and float filler to leave smooth, flat hard surface.

C. Prohibit traffic until filler is cured.

D. Vacuum clean substrate.

3.03 INSTALLATION - FLOORING MATERIAL

A. Install in accordance with manufacturer's instructions.

B. Mix tile from container to ensure shade variations are consistent.

C. Spread only enough adhesive to permit installation of flooring before initial set.

D Set flooring in place, press with heavy roller to ensure full adhesion.

E. Lay flooring with joints and seams parallel to building lines to produce minimum number of seams.

F. Install with minimum 3 inch tile width at room or area perimeter, to square grid pattern with all joints aligned, with pattern grain alternating with adjacent unit to produce basket weave pattern.

G. Terminate resilient flooring at centerline of door openings where adjacent floor finish is dissimilar.

H. Install edge strips at unprotected or exposed edges where flooring terminates.

I. Scribe flooring to walls, columns, cabinets and other appurtenances to produce tight joints.

3.04 INSTALLATION - BASE MATERIAL

A. Fit joints tight and vertical. Maintain minimum measurement of 18 inches between joints.

B. Miter internal corners. Use pre-molded sections for external corners and exposed ends.

C. Install base on solid backing. Bonding surface of wall base shall be buffed, roughened, ribbed or grooved to improve application and adhesion to the wall surface. Bond tight to wall and floor surfaces.

D. Scribe and fit to door frames and other interruptions.

E. Install straight and level to variation of plus or minus 1/8 inch over 10 feet (1/960).

3.05 PROTECTION

A. Prohibit traffic from floor finish for 48 hours after installation.

3.06 CLEANING

A. Remove excess adhesive from floor, base and wall surfaces without damage.

B. Polish only, vinyl composition tile. No water for 7 days after installation.

END OF SECTION

SECTION 09900
PAINTING

PART 1 - GENERAL

1.01 SUMMARY

A. Provide the following:
   1. Painting and surface preparation for interior unfinished surfaces as scheduled.
   2. Painting and surface preparation for exterior unfinished surfaces as scheduled. Field-painting and surface preparation of exposed mechanical and electrical piping, conduit, ductwork, and equipment.

B. Paint all surfaces with a prime coat and two finish coats, except factory finished items which are not damaged and factory primed surfaces in an undamaged condition. Factory primed surfaces shall receive two finish coats.

1.02 SUBMITTALS

A. Submit for approval samples, product data, 4' by 4' mock-ups, extra stock.

1.03 QUALITY ASSURANCE

A. Comply with governing codes and regulations. Provide products of acceptable manufacturers that have been in satisfactory use in similar service for three years. Use experienced installers. Deliver, handle, and store materials in accordance with manufacturer's instructions.

B. Regulations: Compliance with VOC and environmental regulations.

1.04 MAINTENANCE MATERIALS

A. Leave on premises, when directed by the Owner, not less than one gallon of each color used.

B. Containers to be tightly sealed and clearly labeled (color, room location, etc.) for identification.

PART 2 – PRODUCTS

2.01 MATERIALS

A. Manufacturers: Devoe & Raynolds, Glidden Co., Benjamin Moore, Pratt and Lambert, Sherwin Williams or approved equal. Multicolor finishes by Polomyx, Zolatone or approved equal. First-line commercial-quality products for all coating systems.

PART 3 - EXECUTION

3.01 INSTALLATION

A. Inspect surfaces, report unsatisfactory conditions in writing; beginning work means acceptance of

substrate.

B. Comply with manufacturer's instructions and recommendations for preparation, priming and coating work. Coordinate with work of other sections.

C. Match approved mock-ups for color, texture, and pattern. Re-coat or remove and replace work that does not match or shows loss of adhesion. Clean up, touch up and protect work.

3.02 APPLICATIONS

A. Apply each coat at proper consistency.

B. Each coat of paint is to be slightly darker than preceding coat unless otherwise approved by the Architect/Engineer.

C. Finish coats may require the application of additional coats of paint to produce an opaque coating.

D. Sand lightly between coats to achieve required finish.

E. Do not apply finishes on surfaces that are not sufficiently dry.

F. Allow each coat of finish to dry before following coat is applied, unless directed otherwise by manufacturer.

G. Backprime exposed exterior woodwork with exterior primer paint.

H. Paint finish all edges and panels of wood and/or metal doors.

I. Spray paint final finish coat on all doors.

J. Paint exposed conduit and piping in color to match adjacent surfaces.

K. Blockfiller shall be applied to the interior concrete block with not less than one (1) heavy coat and exterior concrete block with not less than two (2) heavy coats in a manner with brush and roller that forces the blockfiller into the fissures and pores of the block faces. Apply additional coats if required to produce a smooth, uniform surface and to close all open pores, crevices and pin holes.

L. Paint exposed conduit and electrical equipment occurring in finished areas. Color and texture to match adjacent surfaces. Do not paint light fixtures.

M. All surfaces shall receive either a prime coat or enamel undercoat before finish coats are applied. The type of finish coat shall determine the type of prime coat. Previously painted surfaces shall be sound and tightly adhering to its foundation.

N. No surface will be considered acceptable to receive finish paint until it has received a prime coat or enamel undercoat, and any surface that is finish painted without a prime coating shall be repainted as directed by the Architect/Engineer.

O. Do not paint naturally finished aluminum surfaces.

P. Prime previously factory primed surfaces that have been damaged.

3.03 SCHEDULE

INTERIOR PAINT SCHEDULE

Gypsum Drywall Walls	Flat	1 coat latex primer 2 coats latex finish
Gypsum Drywall Walls in Restrooms,	Semi Gloss	1 coat latex primer 2 coats latex finish
Gypsum Drywall Ceilings	Flat	1 coat latex primer 2 coats latex finish
Wood for Painted Finish	Semi Gloss	1 coat interior alkyd enamel undercoat 2 coats alkyd enamel
Wood for Transparent Finish	Satin Gloss	1 coat wood filler 1 coat of sealer as recommended 2 coats of satin finish varnish.
Concrete Masonry Units	Exterior Gloss Enamel	1 coat latex block filler 2 coats alkyd finish
Ferrous Metals, interior metal swing doors and frames, overhead doors and frames	Satin Enamel	1 coat recommended primer 2 coat alkyd enamel

EXTERIOR PAINT SCHEDULE

Wood for Painted Finish	Exterior Gloss Enamel	1 coat exterior alkyd enamel undercoat 2 coats alkyd enamel
Ferrous metal, exposed structural steel members	Exterior Gloss Enamel	1 coat, rust-inhibiting primer 2 coat alkyd enamel finish
Galvanized Metal	Flat Gloss	1 coat, galvanized metal primer 2 coats alkyd enamel finish

END OF SECTION

SECTION 09910
PAINTING FUELING SYSTEM

PART 1 - GENERAL

1.01 SECTION INCLUDES

A. Surface Preparation

B. Surface Finish Schedule

1.02 RELATED WORK

A. Section Various: Shop primed items, as called for under individual sections.

1.03 REFERENCES

A. ANSI/ASTM D16 - Definitions of Terms Relating to Paint, Varnish, Lacquer, and Related Products.

1.04 DEFINITION

A. Conform to ANSI/ASTM D16 for interpretation of terms used in this Section.

1.05 QUALITY ASSURANCE

A. Product Manufacturer: Company specializing in manufacturing quality paints and finishing products with ten years experience.

B. Applicator: Company specializing in commercial painting and industrial painting with five years documented experience.

1.06 REGULATORY REQUIREMENTS

A. Conform to applicable code for flame/fuel/smoke rating requirements for finishes.

1.07 SUBMITTALS

A. Submit product data under provisions of Section 01300 - Submittals.

B. Provide product data on all finishing products.

C. Submit samples under provisions of Section 01300 - Submittals.

D. Submit manufacturers' application instructions under provisions of Section 01300 - Submittals.

1.08 DELIVERY, STORAGE, AND HANDLING

A. Deliver products to site under provisions of Section 01600 - Material and Equipment.

B. Store and protect products under provisions of Section 01600 - Material and Equipment.

C. Deliver products to site in sealed and labeled containers; inspect to verify acceptance.

D. Container labeling to include manufacturer's name, type of paint, brand name, brand code, coverage, surface preparation, drying time, cleanup, color designation, and instructions for mixing and reducing.

E. Store paint materials at minimum ambient temperature at 45°F (7°C) and a maximum of 90°F (32°C), in well ventilated areas, unless required otherwise by manufacturers' instructions.

F. Take precautionary measures to prevent fire hazards and spontaneous combustion.

1.09 ENVIRONMENTAL REQUIREMENTS

A. Provide continuous ventilation and heating facilities to maintain surface and ambient temperatures above 45°F for 24 hours before, during and 48 hours after application of finishes, unless required otherwise by manufacturer's instructions.

B. Do not apply exterior coatings during rain or snow, or when relative humidity is above 50%, unless required otherwise by manufacturer's instructions.

C. Minimum Application Temperatures for Latex Paints: 45°F (7°C) for interiors; 50°F (10°C) for exteriors, unless required otherwise by manufacturer's instructions.

1.10 EXTRA STOCK

A. Provide one-gallon container of each color at each site to Owner.

PART 2 - PRODUCTS

2.01 ACCEPTABLE MANUFACTURER'S – PAINT

A. Tnemec

B. Pittsburgh

C. Sherwin Williams

2.02 ACCEPTABLE MANUFACTURER'S - PRIMER SEALERS

A. Tnemec

B. Pittsburgh

C. Sherwin Williams

2.03 ACCEPTABLE MANUFACTURER'S - FIELD CATALYZED COATINGS

A. Tnemec

B. Pittsburgh

C. Sherwin Williams

2.04 MATERIALS

A. Coatings: Ready mixed, except field-catalyzed coatings. Process pigments to a soft paste consistency, capable of being readily and uniformly dispersed to a homogeneous coating.

B. Coatings: Good flow and brushing properties; capable of drying or curing free of streaks or sags.

C. Accessory Materials: Linseed oil, shellac, turpentine, paint thinners and other materials not specifically indicated but required to achieve the finish specified, of commercial quality.

PART 3 - EXECUTION

3.01 INSPECTION

A. Verify that surfaces and substrate conditions are ready to receive work as instructed by the product manufacturer.

B. Examine surfaces scheduled to be finished prior to commencement of work. Report any condition that may potentially affect proper application.

3.02 PREPARATION

A. Remove electrical plates, hardware, light fixture trim, and fittings prior to preparing surfaces or finishing.

B. Correct minor defects and clean surfaces that affect work of this Section.

C. Shellac and seal marks which may bleed through surface finishes.

D. Impervious Surfaces: Remove mildew by scrubbing with solution of tri-sodium phosphate and bleach. Rinse with clean water and allow surface to dry.

E. Aluminum Surfaces Scheduled for Paint Finish: Remove oxidation with acid etch and solvent washing. Apply etching primer immediately following cleaning.

F. Asphalt, Creosote, or Bituminous Surfaces Scheduled for Paint Finish: Remove foreign particles to permit adhesion of finishing materials. Apply compatible sealer or primer.

G. Insulated Coverings: Remove dirt, grease, and oil from canvas and cotton.

H. Concrete Floors: Remove contamination, then acid etch and rinse floors with clear water. Verify required acid-alkali balance is achieved. Allow to dry.

I. Copper Surfaces Scheduled for a Paint Finish: Remove contamination by steam, high-pressure water, or solvent washing. Apply vinyl etch primer immediately following cleaning.

J. Copper Surfaces Scheduled for a Natural Oxidized Finish: Remove contamination by applying oxidizing solution of copper acetate and ammonium chloride in acetic acid. Rub on repeatedly for required effect. Once attained, rinse surfaces with clear water and allow to dry.

K. Galvanized Surfaces: Remove surface contamination and oils and wash with solvent. Apply coat of etching primer.

L. Concrete and Unit Masonry Surfaces Scheduled to Receive Paint Finish: Remove dirt, loose mortar, scale, salt or alkali powder, and other foreign matter. Remove oil and grease with a solution of tri-sodium phosphate; rinse well and allow to dry. Remove stains caused by weathering of corroding metals with a solution of sodium metasilicate after thoroughly wetting with water. Allow to dry.

M. Uncoated Steel and Iron Surfaces: Remove grease, scale, dirt, and rust. Where heavy coatings of scale are evident, remove by wire brushing or sandblasting; clean by washing with solvent. Apply a treatment of phosphoric acid solution, ensuring weld joints, bolts, and nuts are similarly cleaned. Spot prime paint after repairs.

N. Shop Primed Steel Surfaces: Sand and scrape to remove loose primer and rust. Feather edges to make touch-up patches inconspicuous. Clean surfaces with solvent. Prime bare steel surfaces.

3.03 PROTECTION

A. Protect elements surrounding the work of this Section from damage or disfiguration.

B. Repair damage to other surfaces caused by work of this Section.

C. Furnish drop cloths, shields, and protective methods to prevent spray or droppings from disfiguring other surfaces.

D. Remove empty paint containers from site.

3.04 APPLICATION

A. Apply products in accordance with manufacturer's instructions.

B. Do not apply finishes to surfaces that are not dry.

C. Apply each coat to uniform finish.

D. Apply each coat of paint slightly darker than preceding coat unless otherwise approved.

E. Sand lightly between coats to achieve required finish.

F. Allow applied coat to dry before next coat is applied.

3.05 FINISHING MECHANICAL AND ELECTRICAL EQUIPMENT

A. Paint shop-primed equipment.

B. Prime and paint insulated and exposed pipes, conduit, boxes, insulated and exposed ducts, hangers, brackets, collars and supports, where items are refinished.

C. Replace identification markings on mechanical or electrical equipment when painted accidentally. Contractor shall paint junction box covers independently from conduit.

D. Paint exposed conduit and electrical equipment.

E. Replace electrical plates, hardware, light fixture trim, and fittings removed prior to finishing.

3.06 CLEANING

A. As work proceeds, promptly remove paint where spilled, splashed, or spattered.

B. During progress of work, maintain premises free of unnecessary accumulation of tools, equipment, surplus materials, and debris.

C. Collect cotton waste, cloths, and material which may constitute a fire hazard, place in closed metal containers and remove daily from site.

3.07 SCHEDULE - SHOP PRIMED ITEMS FOR SITE FINISHING

A. Valves

B. Tanks (Above ground)

3.08 SCHEDULE - EXTERIOR SURFACES

A. Steel - Unprimed
   1. One coat universal primer.
   2. Two coats alkyd enamel, semi-gloss.

B. Steel - Shop Primed
   1. Touch up with universal primer.
   2. Two coats alkyd enamel, semi-gloss.

C. Steel - Galvanized
   1. One coat etching primer.
   2. One coat universal primer.
   3. Two coats alkyd enamel, semi-gloss.

D. Fiberglass Pipe
   1. Two coats as recommended by pipe supplier.

E. Concrete
   1. One coat primer as recommended by paint supplier.
   2. Two coats alkyd enamel, semi-gloss.

3.09 COLORS

A. Submit manufacturers' color selection and schedule of items to be painted to Owner at the pre-construction meeting. Owner will select colors and notify Contractor.

3.10 SCHEDULE – ITEMS

A. Tanks (Above Ground)

B. Valves

C. Pipe

D. Stairs and platforms

E. Exposed conduit, wireways, etc.

F. Guard post

G. Manhole covers (sump) and frames

H. Canopy

END OF SECTION

SECTION 09970
CONCRETE FLOOR SEALING

PART 1 - GENERAL

1.01 SUBMITTALS:

Submit manufacturer's technical data for cleaning and sealing materials proposed.

1.02 RELATED WORK SPECIFIED ELSEWHERE:

Section 03300 - Cast in Place Concrete -Concrete Floor Curing

PART 2 - PRODUCTS

2.01 MATERIALS:

Sealing Compound - Waterthane 200 as manufactured by Building Care, Inc. distributed by B & L Supply, Dallas, 214/741-4993.

PART 3 - EXECUTION

3.01 CONCRETE SEALING:

A. Location:

B. Cleaning: Just prior to occupancy of building, remove all foreign material from concrete by scrubbing with brush, detergent and water. If excessive staining or soiling exists, a chemical cleaning agent shall be sued to clean floors. Rinse floors with water and allow to dry.

C. Sealing: Apply sealing compound, full strength, using a roller or recommended applicator. Allow surface to dry for 2 hours. Apply second coat of sealing compound. Finished surface shall form a film sheet when dry.

END OF SECTION

SECTION 10105
VISUAL DISPLAY BOARDS

PART 1 - GENERAL

1.01 WORK INCLUDES

A. Surfaced metal markerboards.

B. Trim chalkrail, and accessories.

1.02 RELATED SECTIONS

A. Section 06100 - Carpentry Work: Wood Blocking.

1.03 REFERENCES

A. ASTM A424 - Steel Sheets for Porcelain Enameling.

B. ASTM B221 - Aluminum-Alloy Extruded Bars, Rods, Wire, Shapes, and Tubes.

C. ASTM E84 - Test Method for Surface Burning Characteristics of Building Materials.

D. PEI (Porcelain Enamel Institute) - Performance Specifications for Porcelain Enamel Chalkboards.

1.04 SUBMITTALS

A. Submit under provisions of Section 01340.

B. Shop Drawings: Indicate wall elevations, sections of trim members, dimensions, joint locations and special anchor details.

C. Product Data: Provide data on markerboards, tackboards, tackboard surface covering, and trim and accessories.

1.05 OPERATION AND MAINTENANCE DATA

A. Submit under provisions of Section 01700.

B. Maintenance Data: Include data on regular cleaning and stain removal.

1.06 QUALIFICATIONS

A. Manufacturer: Company specializing in manufacturing the products specified in this section with minimum three years experience.

1.07 FIELD MEASUREMENTS

A. Verify that field measurements are as indicated on shop drawings.

1.08 WARRANTY

A. Provide a lifetime warranty for all markerboard and tackboard faces.

PART 2 - PRODUCTS

2.01 ACCEPTABLE MANUFACTURERS

A. Manufacturer and Type: Claridge Corp., Type "A", Series 1, 8' x 4'.

B. Other Acceptable Manufacturers:
   1. Best Rite Corp.
   2. Greensteel Div. Information Display Technology, Inc.,
   3. Webber Costello

C. Substitutions: Under provisions of Section 01630.

2.02 MARKERBOARD MATERIAL

A. Sheet Steel: ASTM A526, galvanized to G90 designation. ASTM A424, Type I, commercial quality.

2.03 FABRICATION - MARKERBOARDS

A. Outer Face Sheet: Steel, 22 gauge.

B. Core: Particle board, 1/2 inch thick.

2.04 FABRICATION - FRAME AND TRIM

A. Aluminum Frame: Of wide trim profile; concealed fasteners, over markerboard and tackboard surfaces.

B. Aluminum Chalkrail: Of flat ribbed profile, one piece full length of chalkboard, closed ends; concealed fasteners.

2.07 FINISHES

A. Porcelain Enamel: Glass fibered enamel, baked to vitreous surfaces; color as selected by Architect.

B. Aluminum Frame, Chalkrail, and Accessories: Manufacturer's standard color anodized satin finish with hardcoat anodic coating. AA Class I integral color coating (AA-A42), color as selected.

PART 3 - EXECUTION

3.01 EXAMINATION

A. Verify that internal wall blocking is ready to receive work and positioning dimensions are as

indicated on shop drawings or as instructed by the manufacturer.

3.02 INSTALLATION

A. Install markerboards in accordance with manufacturer's instructions.

3.03 CLEANING

A. Clean work under provisions of Section 01700.

B. Remove temporary protective cover at date of substantial completion.

END OF SECTION

SECTION 10165
TOILET COMPARTMENTS

PART 1 - GENERAL

1.01 WORK INCLUDED

A. Headrail braced high density polyethylene toilet partitions.

B. Urinal screens.

C. Attachment hardware.

1.02 RELATED WORK

A. Section 10800 - Toilet and Bath Accessories.

1.03 REFERENCES

A. ASTM A167 - Stainless and Heat Resisting Chromium - Nickel Steel, Plate, Sheet and Strip.

1.04 SUBMITTALS

A. Submit shop drawings and product data under provisions of Section 01340.

B. Indicate partition layouts, swing of doors, elevations, anchorage and mounting details, components, hardware, finishes and relevant dimensions.

C. Submit samples under provisions of Section 01340.

D. Provide sample of panel colors in 2 x 3 inch minimum size sample.

PART 2 - PRODUCTS

2.01 ACCEPTABLE MANUFACTURERS

A. Manufacturer and Type:
   1. Toilet Partition: Sanymetal Products Co. Inc., "Academy."
   2. Urinal Screen: Sanymetal Products Co. Inc., Type C, 24 x 42 inch.

B. Other Acceptable Manufacturers:
   1. Knickerbocker Partition Corporation.
   2. Accurate Partitions Division, Kinkead Industries, Inc.
   3. Global Steel Products Corporation.
   4. Ampco Products, Inc.

C. Substitutions: Under provisions of Section 01630.

2.02 MATERIALS

A. Doors, pilasters and urinal screens shall be manufactured from HDPE containing a minimum of 10% recycled material manufactured under high pressure forming a single component section which is waterproof, non absorbent and has a self lubricating surface. Provide units with eased edges and with minimum ¾ inch thick doors and pilasters and minimum ¾ inch thick panels and screens. Color selected from manufacturer's standard polymer colors.

B. Headrails: 3/4 inch x 1-1/4 inch anodized extruded aluminum; with cast socket type wall brackets.

C. Pilaster Shoes: ASTM A167, type 304 stainless steel, No. 4 finish; 4 inch high, with adjustable screw jacks.

D. Attachments, Screws, and Bolts: Stainless steel; theft-proof type; heavy duty extruded aluminum brackets.

E. Hardware: Chrome plated non-ferrous cast pivot hinges, non-rising, spring-loaded type, adjustable for door close positioning; nylon bearings; concealed door latch with emergency access; door strike and keeper with rubber bumper; cast alloy chrome plated coat hook and bumper.

PART 3 - EXECUTION

3.01 INSPECTION

A. Examine site conditions and verify field measurements.

B. Verify correct spacing of plumbing fixtures.

C. Verify correct location of built-in framing, anchorage, and bracing, where required.

D. Beginning of installation means acceptance of existing conditions.

3.02 INSTALLATION

A. Install partitions secure, rigid, plumb, level, and square.

B. Leave 1/2 inch space between wall and panels and between wall and end pilasters.

C. Attach panel brackets securely to walls using appropriate anchor devices.

D. Attach panels and pilasters to bracket with through bolts and nuts with tamperproof heads. Locate headrail joints at pilaster center lines.

E. Anchor urinal screen panels to walls with three panel brackets.

F. Provide for adjustment of floor variations with screw jack through steel saddles integral with pilaster. Conceal floor fasteners with stainless steel pilaster shoes.

G. Equip each door with hinges, one door latch, and one coat hook and bumper.

H. Install door strike keeper with door bumper on each pilaster in alignment with door latch.

I. Adjust and align hardware to uniform clearance at vertical edges of doors not exceeding 3/16 inch.

J. Adjust hinges to locate doors in partial open position when unlatched, except that out-swing doors shall return to closed position.

K. Field touch-up of scratches or defaced plastic laminate finish will not be permitted.

L. Damaged, scratched or marred defective materials will be rejected, and shall be replaced with new materials.

3.03 ERECTION TOLERANCES

A. Maximum Variation from True Position: ¼ inch.

B. Maximum Variation from Plumb: 1/8 inch.

3.04 ADJUSTING

A. Adjust and align components for smooth operation.

3.05 CLEANING

A. Remove protective masking.

B. Clean surfaces.

END OF SECTION

SECTION 10350
FLAGPOLES

PART 1 - GENERAL

1.01 WORK INCLUDED

A. Aluminum Flagpole.

B. Ground Mounted.

C. Halyards and accessories.

1.02 RELATED WORK

A. Section 03001 -Concrete Work: Concrete base construction.

1.03 REFERENCES

A. ASTM B221 - Aluminum Alloy Extruded Bars, Rods, Wire, Shapes, and Tube.

1.04 SYSTEM DESCRIPTION

A. Type: Ground set; fixed type.

B. Pole Design: Cone tapered.

C. Nominal Height: 30 feet measured from top to base.

D. Halyard: Internal type.

1.05 REFERENCES

A. ASTM B221 - Aluminum - Alloy Extruded Bar, Rod, Wire, Shape and Tube.

1.06 PERFORMANCE

A. Pole Without Flag: Resist without permanent deformation, 90 miles/hr. wind velocity, non-resonant.

1.07 SUBMITTALS

A. Submit shop drawings, product data and manufacturers installation instructions under provisions of Section 01340.

B. Indicate dimensions of pole and anchor requirements, base details, all components, and sizes.

1.08 DELIVERY, STORAGE AND HANDLING

A. Deliver, store and protect products under provisions of Section 01620.

B. Spiral wrap flagpole with protective covering and pack in protective shipping tubes or containers.

C. Protect flagpole and accessories on site from damage or moisture.

PART 2 - PRODUCTS

2.01 ACCEPTABLE MANUFACTURERS

A. Manufacturer: American Flagpole Division of Kearney - National Inc.

B. Other acceptable manufacturers:
1. Concord Industries, Inc.
2. John Ewing and Co. Inc.
3. Baartol Company, Inc.
4. Eder.
5. Morgan Products, Inc.

C. Substitutions: Under provisions of Section 01630.

2.02 POLE MATERIALS/CONFIGURATION

A. Aluminum: ASTM B221, 6063-T6 tubing; 6 inch outside diameter at butt, 3 inch outside diameter at top, .188 inch wall thickness.

2.03 COMPONENTS AND ACCESSORIES

A. Final Ball: Aluminum, 6 inch diameter.

B. Truck Assembly: Double, cast aluminum revolving, stainless steel ball bearings, non-fouling.

C. Flag: By Owner.

E. Halyard: cable.

G. Asphaltic Paint:: Bituminous coating, black color.

2.04 MOUNTING COMPONENTS

A. Foundation Tube Sleeve: 16 gage corrugated galvanized steel, depth as required.

B. Flash Collar: Aluminum

C. Lighting Arrestor Spike: 18 inch long copper rod, 3/4 inch diameter.

2.05 FINISH

A. Aluminum: Satin brush, clear, anodized finish.

PART 3 - EXECUTION

3.01 INSPECTION

A. Verify concrete foundation is ready to receive work and dimensions are as indicated on drawings.

B. Beginning of installation means acceptance of existing conditions.

3.02 PREPARATION

A. Coat metal sleeve surfaces below grade and surfaces in contact with dissimilar materials with asphaltic paint.

3.03 INSTALLATION

A. Install flagpole, base assembly, and fittings in accordance with manufacturer's instructions.

B. Electrically ground flagpole installation.

C. Install foundation plate and centering wedges for flagpole base set in concrete base and fasten. Fill foundation tube sleeve with sand and compact.

D. Set aluminum flash collar in bed of polyurethane sealant.

3.04 ERECTION TOLERANCES

A. Maximum variation from plumb: One inch.

3.05 ADJUSTING AND CLEANING

A. Clean surfaces as required.

B. Adjust operating devices so that halyard functions smoothly.

END OF SECTION

SECTION 10425
SIGNAGE

PART 1 - GENERAL

1.01 SUMMARY

A. Provide building signage:
   1. Panel signs.
   2. Dimensional letters and logo.
   3. Cast aluminum stars

1.02 SUBMITTALS

A. Submit for approval samples, shop drawings, product data.

1.03 QUALITY ASSURANCE

A. Comply with governing codes and regulations. Provide products of acceptable manufacturers that have been in satisfactory use in similar service for three years. Use experienced installers. Deliver, handle, and store materials in accordance with manufacturer's instructions.

B. Regulations: ADAAG.

PART 2 - PRODUCTS

2.01 MATERIALS

A. Manufacturers of panel signs, dimensional letters and cast aluminum stars:
   1. Andco Industries
   2. ASI Sign Systems
   3. Corpus Christi Stampworks
   4. Best Signs
   5. The Southwell Company
   6. Or approved equal.

B. Panel Signs:
   1. Type: Signs to be unframed plaque raised letter type complete with adhesive attachment for mounting.

C. Metal Finishes: Stars
   1. Aluminum: Color as selected.

2.02 MATERIALS

A. Plastic Laminate: Provide high pressure plastic laminate engraving stock with face and plies in contrasting colors, in finishes and color combinations for the manufacturer’s standards.

B. Aluminum Castings: Provide aluminum castings of alloy and temper recommended by the aluminum producer and finishes for the casting process used and for the use and finish indicated.

C. Fasteners: Use concealed fasteners fabricated from metals that are corrosive to the sign material and mounting surface.

2.03 SCHEDULE

A. Plastic laminate signs
   1. Two “men & women incorporating handicap symbol”.
   2. “janitor”
   3. Two “electrical”
   4. “telephone/communications room”
   5. Two “storage room”

B. Dimensional Letters
   1. 8” letters – Texas Department of Transportation and logo in proportion to letters in the standard TxDOT colors.

C. Cast Aluminum Stars:
   1. Provide cast aluminum stars as indicated on drawings.

PART 3 - EXECUTION

3.01 INSTALLATION

A. Install materials and systems in accordance with manufacturer's instructions and approved submittals. Install materials and systems in proper relation with adjacent construction and with uniform appearance. Coordinate with work of other sections.

B. Restore damaged finishes. Clean and protect work from damage.

END OF SECTION

SECTION 10500
METAL LOCKERS

PART 1 - GENERAL

1.01 WORK INCLUDED

A. Locker units and hinged doors.

B. Metal base, top and filler panels.

C. Hooks, latches, and hardware.

D. Attachment hardware.

E. Locker benches.

1.02 RELATED WORK

A. Section 04300 - Unit Masonry System: CMU wall construction.

B. Section 06001 - Carpentry Work: Wood anchor reinforcement in walls and nailing strips.

1.03 SYSTEM DESCRIPTION

A. Lockers: Free standing full height single tier lockers; with metal base; with sloped tops; and padlock hasps.

1.04 SUBMITTALS

A. Submit shop drawings, product data and manufacturers installation instructions in accordance with Section 01340.

B. Indicate locker type, size, configurations, installation details, layout of groups of lockers, accessories, color and finish, and numbering.

1.05 PROTECTION

A. Store and protect lockers under provisions of Section 01620.

B. Protect locker finishes and adjacent surfaces and materials from damage or marring during installation.

PART 2 - PRODUCTS

2.01 ACCEPTABLE MANUFACTURERS

A. Manufacturer and Type: Lyon Metal Products, Incorporated.

B. Other acceptable manufacturers:
   1. Penco.
   2. Medart.
   3. Republic Storage Systems Company.
   4. Interior Steel Company.

C. Substitutions: Items of same function and performance are acceptable in accordance with Section 01630.

2.02 MATERIALS

A. Sheet Steel: Mild cold-rolled sheet steel of the following minimum thickness:
   1. Body and Shelf: 24 gage.
   2. Doors: 16 gage
   3. Door Frames: 16 gage.
   4. Hinges: 14 gage.
   5. Top and Trim: 18 gage.
   6. Base: 12 gage.

2.03 ACCESSORIES

A. Provide each locker with one double prong ceiling hook, three single prong hooks and metal number plate.

B. Provide hardwood bench 9-1/2" wide by 1-1.4" thick with enameled steel pedestals to match locker color.

2.04 FABRICATION

A. Lockers Units: 27 units, 12 inches wide x 15 inches deep x 72 inches tall, single tier.

B. Bodies: 24 gauge steel formed and flanged with steel stiffener ribs; electrically spot welded or bolted together.

C. Door Frame: 16 gauge steel formed channel shape, welded and ground flush, welded to body.

D. Doors: One piece 16 gauge steel with both vertical edges formed into channel shaped formation; top and bottom shall be flanged at 90° angle.

E. Hinges: Three for each door. Weld securely to unit body and bolt to unit door.

F. Provide locking handle for padlock. Locking device supplied by Owner.

G. Bases: "Z" type locker base, 4 inches high, 12 gauge.

H. Provide 16 gauge finished end panels, filler panels, and sloped metal tops to close off all openings.

I. Provide ventilation openings at top and bottom of each locker.

J. Finish edges smooth without burrs.

K. Provide number plates.

2.05 FINISHES

A. Clean, degrease and neutralize metal; prime and finish with two coats of baked enamel. Provide same color inside and outside of locker.

B. Color as selected by Architect/Engineer, from manufacturer's standard range.

PART 3 - EXECUTION

3.01 PREPARATION

A. Take site dimensions affecting this work

B. Verify that field measurements are as indicated on shop drawings.

C. Ensure that bases are properly sized and located.

3.02 INSTALLATION

A. Install lockers secure, plumb, square, and in line. Set on prepared "Z" type locker base provided.

B. Anchor lockers to wall with appropriate anchor devices to suit substrate.

C. Bolt adjoining locker units together to provide rigid installation.

D. Install 16 gauge. finished metal end panels, filler panels, sloped tops and bases to completely close off openings. Install 4 inch high, "Z" type, steel base for all lockers.

E. Install accessories as recommended by manufacturer.

F. Install/mount hardwood benches as specified.

END OF SECTION

SECTION 10522
FIRE EXTINGUISHERS AND CABINETS

PART 1 - GENERAL

1.01 SUMMARY

A. Provide fire extinguishers and cabinets:
   1. Fire extinguishers and cabinets.

1.02 SUBMITTALS

B. Submit for approval shop drawings, product data.

1.03 QUALITY ASSURANCE

C. Comply with governing codes and regulations. Provide products of acceptable manufacturers which have been in satisfactory use in similar service for three years. Use experienced installers. Deliver, handle, and store materials in accordance with manufacturer's instructions.

D. Standards: UL and FM listed products, NFPA 10...

E. Regulations: ADAAG.

PART 2 - PRODUCTS

2.01 MATERIALS

A. Manufactures: J. L. Industries, Larsen’s Manufacturing, Potter-Roemer or approved equal.

B. Fire Extinguishers:
   1. Type: Dry chemical type.

C. Cabinets:
   1. Semi Recessed Mounting: Cabinets for recess into drywall shall be equal to Larsen’s Manufacturing Co., 20 gauge cold rolled steel, with baked acrylic enamel finish, full glass door style with acrylic glass, Model 2409-5R, 1-1/2” rolled edge trim protection with continuous piano hinge door.
   2. Surface Mounted Cabinets: Shall be equal to Larsen’s Manufacturing Co., 20 gauge cold rolled steel, with baked acrylic enamel finish, full glass door style with full acrylic glass, Model 2409-SM.

PART 3 - EXECUTION

3.01 INSTALLATION

A. Install fire extinguishers at locations indicated on drawings.

B. Install fire extinguishers in cabinets in public areas plumb and level at heights acceptable to

authorities having jurisdiction.

C. Install materials and systems in accordance with manufacturer's instructions and approved submittals. Install materials and systems in proper relation with adjacent construction and with uniform appearance. Coordinate with work of other sections.

END OF SECTION

SECTION 10800
TOILET ACCESSORIES

PART 1 - GENERAL

1.01 WORK INCLUDED

A. Toilet and bath accessories listed herein.

B. Rough-in frames furnished to other sections.

C. Grab bars.

D. Attachment hardware.

1.02 RELATED WORK

A. Section 01415 - Facilities for the Disabled; Governing Standards.

B. Section 06001 - Carpentry Work: Wood anchor reinforcement within walls.

1.03 REFERENCES

A. ANSI A117.1 - 1986 Safety Standards for the Disabled.

B. ASTM A167 - Stainless and Heat-Resisting Chromium-Nickel Steel Plate, Sheet, and Strip.

C. ASTM A269 - Seamless and Welded Stainless Steel Tubing for General Service.

1.04 PRODUCT DATA/SUBMITTALS

A. Submit manufacturer's product data in accordance to Section 01340.

B. Data to illustrate each accessory at large scale and show installation method.

1.05 REGULATORY REQUIREMENTS

A. Conform to ANSI A117.1 - 1986 code requirements for access for the disabled.

1.06 COORDINATION

A. Coordinate the work for this section with the placement of internal wall reinforcement to receive anchor attachments.

1.07 DELIVERY, STORAGE AND HANDLING

A. Do not deliver accessories to site until rooms in which they are to be installed are ready to receive them.

B. Pack accessories individually in a manner to protect accessory and its finish.

1.08 PROTECTION

A. Protect adjacent or adjoining finished surfaces and work from damage during installation of work of this section.

PART 2 - PRODUCTS

2.01 ACCEPTABLE MANUFACTURERS

A. Manufacturer and Type: Bobrick Washroom Equipment, Inc.,

B. Other Acceptable Manufacturers:
   1. American Specialties, Inc.
   2. McKinney-Parker.
   3. Bradley Corporation.
   4. General Accessory Manufacturing Co.

C. Substitutions: Items of same function and performance are acceptable in conformance with Section 01630.

2.02 MATERIALS

A. Stainless Steel Sheet: ASTM A167, commercial grade, 22 gage.

B. Stainless Steel Tubing: ASTM A269, commercial grade, seamless welded.

C. Fasteners, Screws, and Bolts: Hot dip galvanized.

D. Expansion Shields: Fiber, lead or rubber as recommended by accessory manufacturer for component and substrate.

2.03 FINISHES

A. Chrome/nickel plating: Satin finish.

B. Stainless steel: Satin finish.

C. Shop Primed Ferrous Metals: Pre-treat and clean, spray-apply one coat primer and minimum two coats baked enamel.

2.04 FABRICATION

A. Weld and grind smooth joints of fabricated components.

B. Form exposed surfaces from one sheet of stock, free of joints.

C. Provide steel anchor plates and anchor components for installation on building finishes.

D. Form surfaces flat without distortion. Maintain flat surfaces without scratches or dents.

E. Back paint components where contact is made with building finishes to prevent electrolysis.

F. Hot dip galvanize ferrous metal anchors and fastening devices.

G. Shop assemble components and package complete with anchors and fittings.

H. Supply keys for each accessory, as required, to Owner.

PART 3 - EXECUTION

3.01 PREPARATION

A. Deliver inserts and rough-in frames to job site at appropriate time for building-in. Provide templates and rough-in measurements as required.

B. Before starting work notify Architect/Engineer in writing of any conflicts detrimental to installation or operation of units.

C. Verify with Architect/Engineer exact location of accessories.

3.02 INSTALLATION

A. Install fixtures, accessories and items in strict accordance with manufacturer's printed instructions.

B. Install true, plumb and level, securely and rigidly anchored to substrate.

C. Install in strict accordance with Texas Accessibility Standards (TAS) and as indicated on the drawings.

3.03 SCHEDULE OF ACCESSORIES

A. Grab Bars: Bobrick B-6809x36 inches and B-6809x42 inches, 1-1/2 inch diameter stainless steel grab bar, concealed mounting, 1-1/2-inch stand-off from wall with satin finish. Install in as shown on drawings. Total required: eight (8).

B. Paper Towel Dispenser: Bobrick B-262, satin finish stainless steel, surface mounted, multi-fold paper towel dispenser. Install in rest rooms, meeting room, janitor's closets and shop as shown on drawings. Total required: eight (8).

C. Toilet Paper Holders: Bobrick B-273, satin finish cast aluminum. Install in rest rooms as shown on drawings. Total required: seven (7).

D. Mirrors: Bobrick B-290-2436, 3- 48" by 36" and 1-36" by 36", satin finish stainless steel frame. Install in rest rooms as shown on drawings. Total required: four (4).

E. Mop & Broom Holder: McKinney/Essex 233 x 24" long with 3 holders. Provide one unit is each janitor's closet. Total required: two (2) required.

F. Feminine Napkin Disposal: Bobrick B-270. Provide one for each woman's stall. Total required: three (3) required.

G. Soap Dispensers: Bobrick B-8221. Provide one in each restroom and the meeting room. Total Required: Five (5).

END OF SECTION

SECTION 11140

FUEL DISPENSING SYSTEM

PART 1 GENERAL

1.01 RELATED DOCUMENTS

A. The general provisions of the Contract, including General and Supplementary Conditions, apply to the work specified in this Section.

1.02 RELATED WORK SPECIFIED ELSEWHERE

A. Sections including but not limited to the following:

1. Section 15400 - Plumbing Piping And Associated Materials.

B. All other Divisions of the Contract Documents. Refer to each Division's specifications and drawings for all requirements.

1.03 SCOPE

A. Provide all equipment, materials, labor, supervision, and services necessary for or incidental to the installation of a complete unleaded gasoline and diesel fuel dispensing system.

B. Work included:

1. Aboveground vault, protected type, with one - 2,000 gallon tank diesel, and one 2,000 gallon tank gas.
2. Dispenser units pumps nozzles
4. Tank level and leak detection system
5. Appurtenances including pumps, dispensers, filters, hose, swivels, breakaways, high hang retractors, spill control, emergency/updraft venting, pipe, valves and fittings.
6. Coordinate electrical requirements with the available service and 120 volts schedules on the electrical drawings.

1.04 QUALIFICATIONS

A. Manufacturer: company specializing in the manufacturer of products specified in this Section with minimum of five years experience.

B. Calibration of dispensers shall be performed by a Contractor licensed by the Texas Department of Agriculture and by a registered service person.

1.05 SUBMITTALS

A. Shop drawings and product data in accordance with division 1 showing dimensions, connections, capacities, pressure ratings, arrangement, accessories, controls and wiring.

B. Manufacturer's descriptive literature and specification with capacities, efficiencies, head versus flow curve, installation and operating instructions, list of recommended spare parts, and storage requirements.

C. Nearest authorized service representatives.

D. Results of dispenser calibration tests including registration number of service person and the certificate of dispenser calibrator.

E. Documentation showing successful completion of UL 2085 for the complete aboveground concrete vaulted tank.

1.06 QUALITY ASSURANCE

A. Use adequate numbers of skilled workmen who are thoroughly trained and experienced in the necessary crafts and who are completely familiar with the specified requirements and the methods needed for proper performance of the work of this Section.

B. Without additional cost to the Owner, provide such other labor and materials as are required to complete the work of this Section in accordance with the requirements of governmental agencies having jurisdiction, regardless of whether such materials and associated labor are called for elsewhere in these Contract Documents.

C. When requested, provide the Architect with manufacturer's certificate that materials meet or exceed minimum requirements as specified.

D. Standards: the specifications and standards of the following organizations are by reference made a part of these specifications. All mechanical work, unless otherwise indicated, shall comply with the requirements and recommendations wherever applicable:

1. National Fire protection Association (NFPA) 30 Flammable and combustible Liquids Code.
2. National Fire Protection Association (NFPA) 30A, Automotive and Marine Service Station code.
3. Underwriters Laboratories, Inc. (UL) 2085, Protected Tank and Fire Resistive Tank Listing, with ballistic and impact resistance ratings.
4. Underwriters Laboratories, Inc. (UL) 142, Steel Aboveground Tanks for Flammable and Combustion Liquids.
5. Underwriters Laboratories, Inc. (UL) 1238, Control Equipment for Use with Flammable Liquid Dispensing Devices.
6. Underwriters Laboratories, Inc. (UL) 567, Pipe Connectors for Flammable and Combustible Liquids and LP-Gas.
7. Underwriters laboratories, Inc. (UL) 860, Pipe Unions for Flammable and Combustible Liquids and Fire Protection Service.
8. Underwriters Laboratories, Inc. (UL) 87, Power-operated Dispensing Devices for Petroleum Products.
9. Underwriters Laboratories, Inc. (UL) 842, Valves for Flammable Fluids.
10. Underwriters Laboratories, Inc. (UL) 1709.
11. American Petroleum Institute (API).
12. Petroleum Equipment Institute (P.E.I.) - Recommended Practice for Installation of Aboveground Storage Systems for Motor Vehicle Fueling.

13. National Electric Code: NEC 501-Class I locations and NEC 514 - Gasoline Dispenser and Service Station.
14. National Resource Conservation Commission.
15. Texas Commission on Environmental Quality.

PART 2 PRODUCTS

2.01 FUEL TANKS

A. Provide aboveground protected type vaulted fuel storage tanks. Tanks shall be factory-fabricated, have factory installed insulation and be factory tested. Tanks shall be shown to have passed safety requirements of UFC A-II-F1, including 2 hour fire resistance, hose stream testing, bullet resistance and impact resistance.

B. Fuel storage system shall be composed of two above ground, insulated rectangular tanks, one 2,000 gallon diesel tank and one 2,000 gallon unleaded tank with secondary containment. Tanks shall be utilized for unleaded gasoline and diesel fuel but shall be capable of containing 10% concentration of methanol and alcohol blended fuels. Materials of construction shall be suitable for products listed in paragraph 2.03 - Fuel System Instrumentation.

C. The insulated concrete vaulted tanks shall rest a minimum of 4" above the finished grade. The entire encased tank assembly shall be UL listed in accordance with UL Subject 2085. Tanks shall be provided with means to anchor to slab.

D. The primary and secondary steel tanks shall be manufactured and listed in accordance with UL Standard 142 and have a minimum 3/16 inch thick ASTM A-36 steel shell. The tank shall have continuous weld on all sides and bottom plates, inside and outside. Tanks shall be rectangular. Both tanks shall be pressure tested at 5 pounds per square inch gauge (psig) in accordance with UL Standard 142. All openings shall be from top only. Tank nozzles and spill containment shall be coated with same coating system as external tank. There shall be no metal-to-metal connections of the outer tank to the internal tank except at the tank nozzles. A minimum of two lugs shall be provided on each tank for connecting grounding conductors for lighting protection per NFPA 70. The secondary tank shall be primed with a fuel resistant, epoxy coating 3-4 mils MDFT and finish coated with fuel resistant, alphatic urethane 2-3 mils MDFT. Total coating system thickness shall be a minimum 6 mils MDFT.

E. Tanks shall be equipped with a monitor port utilized for the detection of leaks from the primary to the secondary tank. The monitor port shall be a minimum of 2” schedule 40 steel pipe rigidly attached to the tank, threaded and suitable for electronic monitoring.

F. Provide tank equipment listed below or engineer approved equal.

1. Provide primary and secondary emergency venting in accordance with NFPA 30. Provide permanent tag affixed to tanks listing required venting SCFH of the primary and secondary vaults.
2. Provide 2” updraft vent with vent cap terminating a minimum 12’ from grade to top of vent cap. When the updraft vent is covered by fuel island canopy the vent is required to extend a minimum of 24” above the top of the canopy and at least 12’ above grade.

3. Tanks shall have future conversion capability suitable for future installation of Stage I & II vapor

recovery systems.

4. Opening for submersible pump shall be 4" female threaded pipe suitable for design of pump.

5. Provide 2" male threaded nipple and steel alarm support for sight gauge. Gauge shall be Morrison 918 w/ alarm. Alarm shall be set at 90% full capacity.

6. The aboveground storage tank system shall include a UL listed overfill spill containment bucket of not less than 15 gallons, and shall include a normally closed valve to release spilled product into the primary steel tank. Within the spill containment, provide a UL Listed shut-off valve set at 95% fill capacity and means to stick tank with a top adapter and lockable cap. On unleaded tank only, provide 4" male nipple for future Stage I Vapor Recovery.

7. Tanks shall be warranted against leakage for period of 30 years from the date of installation. All pumps, dispensers, dispenser equipment, pipe valves and fittings and tank appurtenances shall be warranted for manufacturer defects for a period of 1 year from the date of installation.

8. Tank system shall be SuperVault as manufactured by Park Equipment Company or approved equal.

    1. Acceptable Manufacturers - Aboveground Storage Tanks
        1. SuperVault
        2. Hallmark
        3. Envirovault
        4. Steel Tank Institute (Fireguard)

2.02 REMOTE DISPENSER UNITS:

9. Acceptable Manufacturers:
    1. Gasboy
    2. Bennett
    3. Tokheim
    4. Gilbarco

10. The Contractor will furnish new remote dispenser units in accordance with plans and install and calibrate these units per the following standards:
    1. Dispenser units shall be equipped with a heavy-gauge corrosion-resistant cabinet, removable panels, bolt construction, weather-lapped housing joints, rubber vibrator dampers and mechanical totalizers. Dispensers shall be capable of being field calibrated and shall be constructed for heavy duty usage.
    2. Dispenser units shall be equipped with a device that will register to 99.9 gallons and totalize to not less than 99,999.99 gallons. Totalizer shall be non-resetable. Dispensing system shall also include a pulsing device with capabilities to interface with a Fuel Control System (FCS).
    3. Dispenser units shall be equipped with a two (2), three (3) or four (4) piston meter for accuracy.
    4. The unit shall meet the current National Bureau of Standards Handbook No. 44, covering retail fuel type pumps, and shall be certifiable by the Weights and Measures Division of the Texas Department of Agriculture. If a two (2) product unit is requested, the unit must meet this requirement and all the other requirements stated in this entire specification for both product dispensing systems.
    5. The dispenser shall include an in-line, externally mounted, replaceable fuel filter with a drain

valve.

6. Gasoline dispenser units shall be capable of accepting future Stage II vapor recovery vacuum assist pumps.
7. The dispenser will be equipped with a pipe coupling to allow disconnection and removal of the dispenser. The coupling shall be installed as close as possible to the shear valve (inside dispenser cabinet) so as to provide for a fully functioning shear valve and allow removal of the dispenser.
8. The Contractor shall supply and install dispenser pedestals for above-ground piping and shear valve (Storage Solutions or an approved equal). The dispenser pedestal shall be 3/8 inch thick (minimum).

11. Pumps
    1. Acceptable Manufacturers - Submerged Pumps
        1. FE Petro.
        2. Red Jacket.

    2. The Contractor will furnish new pumps in accordance with plans and install and calibrate these units per the following standards:
        1. Submersible pumps shall be appropriate horse-power. The pump capacity shall not be less than 12 gallons per minute (gpm) at each nozzle, with each nozzle operating with one (1) foot of fuel remaining in the tank at any time of the year. A flow test shall be performed by a TCEQ certified testing firm furnished by the Contractor and witnessed by the Engineer.
        2. The bottom of the pumping unit shall be constructed and installed so as to allow removal and pumping of the maximum volume of fuel from the tank (i.e. the bottom of the pump shall be as close to the bottom of the tank as allowed and recommended by a pump manufacturer).
        3. The bottom of the pumping unit shall be a minimum two (2) inch diameter.
        4. Provide a remote control unit equal to Red Jacket Model 880-041-5.

12. Dispenser Nozzles and Miscellaneous Equipment
    1. Acceptable Manufacturers
        1. OPW 11A Automatic Nozzle with OPWB Fillgard Spash Guard and OPW6 two (2) piece hand insulator.
        2. Catlow
        3. EMCO Wheaton
    2. The Contractor will furnish new nozzles, splash guards, hand insulators and hoses in accordance with the plans and specifications, and shall install and calibrate these units per the following standards:
        1. The completed dispenser system individual nozzle shall deliver product at a rate not less than specified above.
        2. The dispenser units shall be equipped with not less than 3/4 inch hydrocarbon-resistant synthetic rubber hose that is not less than 16 feet long. Each hose shall include a half swivel connector with straightening hose at the dispenser and a multi-swivel at the nozzle. Each hose shall be equipped with an individual hose retractor assembly capable of retrieving the hose length specified above. All adjustments and modifications will be performed by the Contractor to ensure that the hose retriever meets the Engineer's requirements. The Contractor shall install an approved emergency breakway coupling on the dispensing hose.
        3. If a dual product/two (2) hose and/or single product/two (2) hosed unit is supplied, the

Contractor shall be responsible for installing a second product line or establishing service so both hoses of the unit are capable of the 10 gpm delivery requirement when the hoses are operating concurrently.

4. Splash guards and hand insulators shall be provided for each dispenser nozzle.
5. Hose Retrievers. Hose retrievers (one (1) per hose) shall be Universal Hose Retriever Model 870 with Hosebun Model 100-1+B and hose cable assembly or an approved equal.
6. Breakaway Hose Connectors. Breakaway hose connectors shall be OPW 66.
7. Flexible Connectors. Flexible connectors shall be Titeflex, Containment Technologies, Total Containment.
8. Fillpipe Adaptors with Lockable Top Seal Cap.
    1) Fillpipe adaptors shall be OPW 633T, EMCO Wheaton, Universal, EBW, Pemco. Caps shall be OPW 634TT, EMCO wheaton, Universal, EBW, Pemco.
    2) Fillpipe adaptors and caps shall be installed at all locations indicated on the plans.
    3) The Contractor shall purchase and provide the following fuel connection attachments required during the fuel supply operations, and use for fuel transfer from the fuel truck into the aboveground storage tanks:
        1) two (2) OPW 633BD Kamlock Couplers or an approved equal.
        2) two (2) OPW 190 Manual Nozzles or an approved equal.

2.04 FUEL SYSTEM INSTRUMENTATION

1. Provide a complete tank level monitoring and leak detection/monitoring system. Coordinate voltage requirements with available 120V as show on the electrical drawings.

2. Automatic tank gauging system shall meet requirements of 40 CFR 280 including Subpart D, Release Detection and 30 TAC 334 including 334.50 Release Detection. The system shall be tested to comply with all applicable Federal Communications Commission requirements, be listed by Underwriters Laboratory, and comply with all other applicable national and local standards.

3. System shall include capability of monitoring up to two tanks. System shall be field programmable, completely automatic, have 50 year data retention, and Standard RS-232C communications interface module and be capable of interfacing with Modem, Fax and Network Interface. The system shall be capable of operating without any additional hardware or software. The system will include printer, keypad, and liquid crystal display. Output shall be in gallons.

4. Inventory reports shall include inventory records, records of product deliveries, leak test reports, shift reports, and alarm reports, theft reports. Inventory reports shall give current tank status such as tank number, product, inches and gallons of product, inches and volume of water, and product temperature. Shift reports shall include the current tank status plus the net change in gallons that shift. Leak test reports shall include tank inventory at the beginning and ending of the test and pass/fail message. Delivery reports shall include beginning and ending inventories and net gallons delivered. Printer shall be automatic and on demand and shall be programmed to conduct leak tests at a minimum of once in a 35 day period.

5. System supplier shall furnish console, probes, sensors and wire from console to probes and sensors.

6. Tank level monitoring system shall include a minimum of two probes. Probes shall be classified by Underwriters Laboratories and intrinsically safe for use in Class 1, Division 1, Group D hazardous locations. Probes may be magnetorestrictive. System shall have programmable alarm limits to

activate on:

1. High product level
2. Low product level
3. High water level
4. Leaks
5. Thefts

7. Console and on-site remote audible alarms or horns shall be provided for Low Product, High Product, Water, Theft, and Leak Check. The Contractor shall be held responsible that each console is fully programmed for all alarms in accordance with the contract specifications. All alarm thresholds shall be user-programmable. Alarms shall be 100 decibels minimum, suitable for outdoor use and include manual reset.

8. Manufacturer shall provide one year warranty for parts and labor for console, probes, sensors and wire.

9. The entire system including probes shall be fully compatible with the products to be stored including gasohol (ten percent ethanol and 90 percent gasoline mixture), 09.5 percent gasoline, and 9.5 percent Oxinol-50* (4.75 percent methanol and 4.75 percent methanol and a minimum of 2.5 percent cosolvent - the blend may contain a maximum concentration of up to 3.7 weight percent oxygen in the final fuel); MTBE (methyl tertiary butyl ether) - gasoline with up to 20 percent, by volume of MTBE; or diesel fuel.

10. Furnish the Owner's representative with one Operation and Maintenance Instruction Manual for the automatic tank gauge before beginning any work at the site. Furnish original manuals, reproduced copies are not acceptable.

11. Manufacturers shall perform start up programming, calibration and installation verification at site. The Contractor shall be liable for all programming. Controller shall include tank set up to account for tilt, material of construction, shape and product. Manufacturer shall conduct an Operations and Maintenance seminar. At the initial seminar, the Owner shall be provided with a detailed summary (in addition to the manual provided prior to work commencing at the site) of the steps required to program, calibrate and operate the equipment. In addition to the initial on-site seminar, the Contractor shall conduct another Operations and Maintenance seminar for the Owner.

12. System shall be a Tank Management System with EPA-Compliant in-tank leak detection TMS 2000 SERIES (2 tanks) as manufactured by Pneumercator or approved equal.

2.05 PIPE AND PIPE FITTINGS

1. Fiberglass Reinforced Pipe and Fittings:

    1. Piping, fittings, and appurtenance equipment shall be fabricated from suitable materials having adequate strength and durability to withstand operating pressures, structural stress, and exposures to which they will be subjected. They shall be compatible with the products and not deteriorate underground. Pipe and fittings shall be provided by only one manufacturer. Do not use fittings not supplied by pipe manufacturer.
    2. Pipe shall be Red Thread II as supplied by A.O. Smith Fiberglass, Dualay 3000/L as supplied

by Ameron, or equal by approved manufacturer and shall be U.L. listed for petroleum products, alcohol and alcohol-gasoline blends. Primary and secondary fuel pipe and fittings of the same type shall be provided by only one manufacturer. Do not use fittings not supplied by the pipe manufacturer.

3. All underground piping shall be fiberglass including primary fuel piping, secondary containment piping or vent piping as required. Each tank shall supply fuel to one or more dispensers. Do not manifold lines.

2. Steel Pipe and Fittings:

   1. Above ground pipe shall be Schedule 40 ASTM A120. Fittings and couplings shall be extra heavy malleable iron screw-type. Unions shall be 250/300# with integral seats. Galvanized pipe and fittings shall be used for gasoline fuel pipe. Black pipe and fittings shall be used for diesel fuel pipe. Vent pipe shall be galvanized steel pipe. Each tank shall be vented individually.

3. Flexible Connectors:

   1. Flexible connectors shall be UL listed stainless steel braided as supplied by Titflex or other approved manufacturer. Flexible connectors shall use convoluted Teflon inner core rated for all grades of fuel including diesel and ethanol or methanol blends of gasoline. Flexible connection shall include a warranty for a minimum period of 20 years against corrosion. Flexible connectors shall be enclosed in an isolation jacket having equal pressure rating of five to seven psi. Install in accordance with manufacturer's instructions, do not install at radius less than approved by manufacturer. All external components of the isolation jacket shall be to non-corrodible. Isolation jacket to be Titflex Guardflex, Total Containment, Containment Technologies, or equal by approved manufacturer.

4. Gaskets:

   1. Gaskets shall be suitable for gasoline, diesel, gasoline/methane. Gaskets to be Style 780 plant Fibre sheet by American Packing and Gasket Company or equal approved manufacturer.

2.06 VALVES

1. Gate Valves: Three inch and smaller valves used in fuel lines shall have threaded ends and be installed at all locations as required for a fully functional system. Valves components shall be rated for gasoline, diesel and gasoline/methanol. Packing shall be non-asbestos graphite/aramid fiber. Valves shall be Grinnell Figure no. 3010 or equal as supplied by approved manufacturers.

2. Shear and Check Valves; Check valves at dispensers for aboveground tanks shall be Tokheim model 52 or equal with shear section and shear bar.

3. Solenoid Valves: Shall be Snaptite model Z6214BBVEA or equal by approved manufacturer.

4. Pressure Relief Valves; Shall be Red Jacket model 123-032-5 or equal by approved manufacturer.

5. Overfill Protection: Overfill protection for aboveground tanks shall meet state and federal Codes.

2.07 SIGNS

1. Supply and install eight signs at locations selected by Owner. Four of the signs shall be installed on the sides of the tanks. Signs shall be conspicuous and legible signs reading "No Smoking - Stop Engines" in letters not less than two inches in height and 3/8 inch stroke.

2. Supply and install four signs at locations selected by Owner. Signs shall be conspicuous and legible reading "EMERGENCY SHUT-OFF" in letters not less than two inches in height and 3/8 inch stroke.

3. Supply and install four signs indicating service and contents (i.e. Diesel, Unleaded) of both the dispenser units and tanks.

PART 3 EXECUTION

3.01 INSTALLATION

1. Install in accordance with manufacturer's recommendations.

2. Dispensers and pumps shall be installed at locations as shown on the drawings. Contractor shall install dispensers as required and furnish all appurtenances including pressure regulating valves, flexible connectors for a fully operational system. Contractor shall furnish and install all new electrical components including but not limited to conductors, conduit, flexible conduit, fittings, unions, junction boxes, wireways, seal fittings/seal-offs, emergency stops, etc. between the dispensers and a wireway located at the building.

3. Emergency stops shall be clearly identified and easily accessible and be installed in a remote location more than 20 feet but less than 100 feet from the dispenser units and also in line of sight of the dispenser units.

4. On-site remote audible alarm or horn with reset shall be located near tanks as directed by Owner. Alarm shall be activated on high level in tanks and other criteria such as theft, low product, etc.

3.02 PIPING, VALVES AND FITTINGS

1. Materials and Design: Piping, valves, fittings, and related components shall be designed and fabricated from suitable materials, having adequate strength and durability to withstand the operating pressures, structural stress, and exposures to which they may be subjected. Specific requirements are that materials must:

    1. Be compatible with products stored.
    2. Not be damaged by normal operating or test pressures.
    3. Have sufficient integral strength to withstand stress during construction and subsequent operations.
    4. Not deteriorate while exposed to outdoor conditions.

2. Piping Layout: Traps (sumps) in the lines shall be avoided.

3. Piping Requirements: Piping materials shall be compatible with products stores. Piping shall be installed so as to facilitate testing, resist corrosion, and prevent damage from movement of system

components.

1. Inspect all materials for signs of damage and confirm compliance with specifications.
2. Provide adequate clearance between piping and conduit, nearby structures, and other system components.
3. Keep pipe, as well as fitting interiors and threads, free from dirt, corrosion, moisture, and debris.
4. Exercise care to accurately measure and cut pipe, so as to avoid the failure that can occur when pipe fittings are installed under stress.
5. Use pipe sealant (dope or cement) compatible with the piping materials and the product being handled. Wrap ribbon dope with the threads to avoid bunching during tightening. Follow the manufacturer's preparation and application instructions, giving proper attention to temperature and moisture condition limitations.
6. Install equipment, check valves, valves, flexible connectors, gauges, monitoring systems, and other system components in accordance with manufacturer's recommendations.
7. Isolate dissimilar materials using sleeves, dielectric unions, etc., to prevent electrolysis.

4. Piping Workmanship:

   1. Inspect pipe-cutting dies frequently and replace when worn.
   2. Ream and de-burr pipe ends after cutting.
   3. Flexible connectors shall be used at the beginning and end of each product line and, if required to relieve stress, where lines change direction.

3.03 TESTING AND TRAINING

1. System Tests: Tank and piping, as well as the satisfactory operation of monitoring systems shall be proven before the system is placed in operation.

2. The following Tank and Component Tests are required to ensure the integrity of the system:

   1. Before placing components in the excavation: 5 psig air test.
   2. After pipe assembly but before connection to the tank or dispensers: 50 psig air test or 100% hydrostatic test.
   3. Before placing the system in service:
      1. Internal and External Monitoring and Gauging Systems: Manufacturer's recommendations.
      2. Tank System: Precision test. (NFPA 329)

3. "As-Built" Drawings: "As-Built drawings of piping, monitoring, and other system components shall be provided by this installer to the Owner. The documents may take the form of a marked-up set of installation drawings showing the location of piping, conduit, and other significant system components.

4. Component Documentation: The Owner should be provided with installation and operating instructions for all components of the tank system, recommended test procedures, preventive maintenance schedules, and tank charts that indicate gallonage for various depths.

3.04 SAFETY PRECAUTIONS

A. The Contractor shall store or handle gasoline or other flammable liquids in strict accordance with all state fire Marshall Requirements.

B. The Contractor shall have two Class 20 B:C fire extinguishers readily available for any work which involves release of product or use of a sparking device.

C. As a minimum, the Contractor shall take the following precautions:

1. Eliminate all potential sources of ignition from the area including smoking materials, and nonexplosion proof electrical and internal combustion equipment.
2. Prevent the generation and discharge of static electricity during venting of flammable vapors.
3. Prevent the accumulation of vapors at ground level and other key locations.

D. A combustible gas indicator shall be used to check for explosive vapor concentrations. All open flame and spark-producing equipment within the vapor hazard area shall be shut down. Electrical equipment (for example, pumps and portable hand tools) used in the area shall be explosion-proof in accordance with NFPA 70B Class I, Division I, Group D or otherwise approved for use in potentially explosive atmospheres.

5. The Contractor shall clean up all fuel and oil spills related to his operations immediately. Sorbent pads or sweeping compound shall be used for diesel spills. Sorbent pads shall be used for gasoline. Spills shall not be washed into yard drains, sidewalks, streets, etc.

6. The Contractor shall use a pan or pail to drain all product from the equipment. The Contractor shall not allow product to soak into the ground. In the event of a spill or leak the Contractor shall immediately (within 4 hours) notify the TxDOT's representative. In addition, within 24 hours of the spill submit typed documentation summarizing the incident to the TxDOT representative.

7. In case of fire, the Contractor shall immediately notify TxDOT's personnel and the following general procedures consistent with NFPA shall be used (the Contractor shall evaluate the specific situation before acting).

1. Contact the Fire Department.
2. Shut off flow of product that may be entering the area.
3. Attempt to extinguish fire or keep it from spreading to adjacent areas. If the fire is out of control, clear the area to avoid risk of injury.
4. Use a dry chemical fire extinguisher (B:C type).

8. The Contractor shall maintain written documentation of compliance with all of the above requirements.

3.05 CALIBRATION AND DISPENSERS

1. All dispensers shall be checked for calibration by the Contractor after work has been completed but prior to acceptance of the work by the Owner. Any adjustments, modifications, repairs, etc., (i.e. the replacement of meters, pump impellers, etc.) Required to the dispenser or fuel system to achieve the required flow plus six cubic inches per five gallons shall be done at no additional cost to the Owner. Include results of calibration tests and a copy of the certificate of registration for the service person who performed the calibration and adjustments in the Operations and Maintenance Manuals.

3.06 SYSTEM DEMONSTRATION

1. Contractor shall demonstrate to Owner and/or Owner's Representative all functions and alarms.

3.07 WARRANTY

1. Tank manufacturer shall furnish a 30-year warranty to the Owner. Warranty shall be against defects in material and workmanship and shall include repair or replacement at no cost to the Owner.

END OF SECTION

SECTION 12512
BLINDS AND SHADES

PART 1 - GENERAL

1.01 WORK INCLUDED

A. Operating louver blind installed into storefront window frame and single hung windows.

1.03 REFERENCES

A. FS AA-V-200B Venetian Blinds.

1.04 DESCRIPTION

A. Horizontal metal slat louver blinds installed to window head, inside and between vertical mullions, with manual control.

1.05 SUBMITTALS

A Submit shop drawings and product data under provisions of Section 01340.

B. Indicate at large scale, installation of blind in window sash, method of attachment, clearances and operation.

C. Submit manufacturer's installation instructions under provisions of Section 01340.

D. Submit samples under provisions of Section 01340.

E. Provide 6 inch blind slats samples in Manufacturer's Standard colors and finishes, for selection by Architect.

1.06 DELIVERY, STORAGE AND HANDLING

A. Deliver blinds to site wrapped and crated in a manner to prevent damage to components or marring of surfaces.

B. Store in a clean, dry area, laid flat and blocked off ground to prevent sagging, twisting or warping.

PART 2 - PRODUCTS

2.01 ACCEPTABLE MANUFACTURERS

A. Levolor Lorentzen, Inc.

B. Marathon Carey-McFall Co.

C. Substitutions: Under provisions of Section 01630.

2.02 LOUVERED BLINDS

A. Louvered Blinds: One inch wide; 0.011 inch thick spring tempered prefinished aluminum horizontal slats with mounting rails, controls, and accessories.

B. Finish: Manufacturer's pre-treatment and baked enamel satin finish; color as selected.

PART 3 - EXECUTION

3.01 PREPARATION

A. Provide necessary measurements and templates to window manufacturer to prepare window for blind installation.

B. Ensure cut-outs and preparatory work are correctly done.

C. Notify Architect/Engineer in writing of any discrepancies which would affect proper installation and operation of blind system. Install after discrepancies are corrected.

3.02 INSTALLATION

A. Install louvered blinds in window sash in accordance with manufacturer's instructions.

B. Secure in place with flush countersunk mechanical fasteners.

C. Adjust parts for smooth operation.

END OF SECTION

SECTION 13120
PRE-ENGINEERED BUILDINGS

PART 1 - GENERAL

1.01 SCOPE: The extent of Pre-engineered Buildings is shown on the drawings, including:

A. Pre-engineered, shop fabricated structural steel building frame.

B. Metal wall and sloped roof systems including linear panels, flashing soffits, gutters and downspouts, canopies. Rakes, ridge cap, doors, insulation and accessories…

C. Primary and Secondary framing system.

1.02 RELATED WORK SPECIFIED ELSEWHERE

A. Cast-in-Place Concrete	Section 03300
B. Doors and Windows (if applicable)	Sections 08100, 8330, 08710
C. Mechanical Systems	Division 15
D. Electrical Systems	Division 16

1.03 SYSTEM DESCRIPTION

A. Rigid frame with straight columns and roof beams and gable roof.

B. Bay Spacing: per plans.

C. Primary Framing: Rigid frame of rafter beams and columns, canopy beams, intermediate columns, end wall columns, and wind bracing.

D. Secondary Framing: Purlins, girts, eave struts, sill supports, clips and other items detailed.

E. Wall System: Preformed metal panels of vertical profile, with sub-girt framing/anchorage assembly, and accessory components.

F. Roof System: Preformed metal panels of upslope standing seam profile, with sub-girt framing/anchorage assembly, insulation and accessory components.

G. Roof Slope: per plans

H. Anchor bolts as specified by the building manufacturer.

1.04 DESIGN REQUIREMENTS

A. Building construction shall meet the specific performance criteria specified herein and in the drawings.

B. Design members to withstand dead load, applicable snow load, and design loads due to pressure and suction of wind calculated in accordance with International Building Code (IBC), 2003, design load schedule and loads imposed by industrial equipment and mechanical, electrical systems.

C. Structural Framing: Design primary and secondary structural members and exterior covering materials for applicable load combinations in accordance with the Metal Building Manufacturer's Association's (MBMA) "Design Practices Manual". Primary structural frames shall be designed as pinned - based frames. Lateral drift of primary frames shall be limited to the eave height (in inches) / 240.

D. Structural Steel: For the design of structural steel members, comply with the requirements of the American Institute of Steel Construction (AISC) "Specifications for the Design, Fabrication and Erection of Structural Steel for Buildings" for design requirements and allowable stresses. Total load deflections shall be limited to L/240.

E. Light Gage Steel: For the design of light gage steel members, comply with the requirements of the American Iron and Steel Institute's (AISI) "Specification for the Design of Cold Formed steel Structural Members" and "Design of Light Gage Steel Diaphragms" for design requirements and allowable stresses. Total load deflections shall be limited to L/240.

F. For welded connections, comply with the American Welding Society's (AWS) "Standard Code for Arc and Gas Welding in Building Construction" for welding procedures.

G. Tolerances: Fabrication shall conform to the fabrication tolerances published in the MBMA "Common Industry Practices".

H. Design Loads: Basic design loads, as well as collateral loads, are as specified.
   1. Basic design loads include, in addition to dead load, live load and wind load.
   2. Collateral loads include additional dead loads over and above the weight of the metal building system such as mechanical and electrical systems.
   3. Design each member to withstand stresses resulting from combinations of loads that produce the maximum allowable stresses in that member as prescribed in MBMA's "Design Practices Manual" Section 9 of Design Practices.

I. Design members to withstand UL 580 - Uplift Resistance, Uplift Class 90 as tested by the Building Manufacturer, or wind load per IBC, whichever is more stringent.

J. Exterior wall and roof system shall withstand imposed loads with maximum allowable deflection of span: L/240.

K. Provide drainage to exterior for water entering or condensation occurring within wall or roof system.

L. Permit movement of components without buckling, failure of joint seals, undue stress on fasteners or other detrimental effects, when subject to temperature range of 150 Degrees F (65.6 Degrees C).

1.05 SUBMITTALS FOR REVIEW

A. Submittals: Procedures for submittals Section 01300

B. Product Data: Provide data on profiles, component dimensions, fasteners and structural properties. Test results from certified lab on each panel system... Performance test results for wind uplift resistance per UL 580, clip to panel strength per ASTM E 1592-95, air infiltration per ASTM E 283-84.

C. Shop Drawings: Indicate assembly dimensions, locations of structural members, connections, attachments, openings, cambers, loads, and all associated items; wall and roof system dimensions, panel layout, general construction details, anchorages and method of anchorage, method or installation; framing anchor bolt settings, sizes, and locations from datum and foundations loads; indicate welded connections with AWS A2.0 welding symbols; indicate net weld length; all design loads. Provide drawings and calculations sealed and signed by a professional engineer licensed to practice in the State of Texas.

D. Samples: Submit three samples of precoated metal panels for each color selected, 12 x 12 inch (305 x 305 mm) in size illustrating color and texture of finish; fasteners, sealants and closers. Submit one 8" long sample of each panel including clips for roof panel.

E. Metal Panel System Fabrication Certification: Submit a letter from the metal building manufacturer certifying that the wall and roof panels have been produced in a factory environment (not job site roll formed) with fixed-base roll forming equipment.

1.06 SUBMITTALS FOR INFORMATION

A. Submittals: Procedures for submittals Section 01300

B. Manufacturer's Instructions: Indicate preparation requirements, anchor bolt placement, structural loads on base plate anchors, and accessories.

C. Erection Drawings: Indicate members by label, assembly sequence, and temporary erection bracing.

1.07 SUBMITTALS FOR CLOSEOUT

A. Project Record Documents: Record actual locations of concealed components and utilities. Record any changes to Construction Documents during construction and provide original As-Built set to TxDOT rep at end of project. Contractor is required to maintain As-Built set on site and when changes occur. Progress Payments will be based on maintaining current As-Built set on a monthly basis and will be checked by TxDOT rep.

B. Upon completion of erection submit written Certification prepared and signed by the design Professional Engineer, qualified herein, attesting to his/her field verification of the erection being in accordance with his/her shop drawings.

1.08 QUALITY ASSURANCE

A. Perform Work in accordance with AISC - Quality Certification Program Category MB. MBMA - Metal Building Systems Manual and MBMA - Low Rise Building Systems Manual. Maintain one copy on site.

B. Manufacturer Qualifications: Company specializing in manufacturing the Products specified in this section with minimum five years documented experience.

C. Erector Qualifications: Company specializing in performing the work of this Section with minimum of five years documented experience and approved by manufacturer. Project Foreman must have specific training in proper installation of specified wall and roof systems with certification. Submit five references from five different architects or owners for systems that have been installed for at least two years and stating that the performance has been satisfactory.

D. Design structural components, develop shop drawings, and perform shop and site work under direct supervision of a Professional Structural Engineer Experienced in design of this work and licensed in the State of Texas.

1.09 DELIVERY, STORAGE AND HANDLING

A. Delivery and receipt of materials shall be in accordance with the MBMA "Common Industry Practices".

B. Deliver and store prefabricated components, sheets, panels and other manufactured items so they will not be damaged or deformed.

C. Stack materials on platforms or pallets, covered with tarpaulins or other suitable weather tight ventilated covering. Cover metal sheets or panels so that water accumulations will drain freely. Do not store sheets or panels in contact with other materials that might cause staining. Elevate one of stored metal sheets and panels so as to positively drain water and prevent "white" rust.

1.10 REGULATORY REQUIREMENTS

A. Conform to IBC, 2003 code for submission of design calculations, reviewed shop and erection drawings, and as required for acquiring permit.

B. Cooperate with regulatory agency or authority and provide data as required.

1.11 PRE-INSTALLATION MEETING

A. Convene one week before starting work of this section.

1.12 WARRANTY

A. Provide a 20 (twenty) year warranty to include coverage for exterior pre-finished surfaces to cover pre-finished color coat against chipping, cracking or crazing, blistering, peeling, chalking or fading. Include coverage for weather tightness of building enclosure elements after installation.

B. Provide a 20 (twenty) year warranty covering bare metal against rupture, structural failure and perforation due to normal atmospheric corrosion exposure.

PART 2 - PRODUCTS

2.01 MANUFACTURERS - BUILDING SYSTEM

A. Manufacturers:
   1. Butler
   2. MBCI.
   3. Other acceptable manufacturers offering equivalent products must be submitted as a substitution to be considered for approval

2.02 MATERIALS - FRAMING

A. Structural Steel Members: ASTM A36/A36M or A529/A529M.

B. Structural Tubing: ASTM A500, Grade B.

C. Pipe: ASTM A53 Grade B.

D. Plate or Bar Stock: STM A529/A529M.

E. Cold Forming Members: ASTM 607 Grade 50 Zinc Coated Steel STM 446-G90.

F. Anchor Bolts: ASTM A307, galvanized to ASTM A153.

G. Bolts, Nuts and Washers: ASTM A325, galvanized to ASTM A153.

H. Welding Materials: AWS D1.1; type required for materials being welded.

I. Primer: SSPC 20, Red oxide.

J. Grout: ASTM C1107, Non-shrink type, premixed compound consisting of non-metallic aggregate, cement, water reducing and plasticizing agents, capable of developing minimum compressive strength of 2400 psi (17 MPa) in two days and 7000 psi (48 MPa) in 28 days.

2.03 DESIGN LOADS

A. Roof Live Loads (Applies to the horizontal projection):
   1. 20 PSF: 0-200 SF tributary area
   2. 16 PSF: 200-600 SF tributary area
   3. 12 PSF: Over 600 SF tributary area

B. Roof Covering: 50 Psf or a 200 pound concentrated load located at center of maximum roof panel span.

C. Auxiliary Loads:
   1. Concentrated Loads: See mechanical and electrical, carefully coordinate and accommodate all items.
   2. Provide support beams in addition to the roof purlins to support loads greater than 500

pounds.

2.04 DESIGN OF PRIMARY FRAMING

A. In the design of primary framing members, wind pressures shall be calculated in accordance with IBC, Wind Speed requirements Primary frames shall be designed with pinned bases.

2.05 BASIC DESIGN WIND PRESSURE (Wall Components, girts and wall panels):

A. Wind Speed: per IBC wind load requirements for this region of Texas.

B. Wind pressures on parts and portions shall be calculated in accordance with the MBMA "Design and practices Manual".

2.06 DESIGN LOAD COMBINATIONS

A. Dead/Live/Wind: Loading combinations of dead load, live load and wind loads shall be in accordance with MBMA recommendations, Section 9 of Design Practices.

2.07 MATERIALS - WALL LINER AND ROOF SYSTEM

A. Sheet Steel Stock: ASTM A446/A446M Grade E galvanized to ASTM A5255 G90 designation.

B. Insulation: In accordance with design requirement section.

C. Restrain insulation with galvanized poultry net at roof.

D. Joint Seal Gaskets: Manufacturer's standard EPDM type.

E. Fasteners: Manufacturer's standard type, galvanized to ASTM A153 1.25 oz/sp ft. (310 g/sp m), finish to match adjacent surfaces when exterior exposed.

F. Bituminous Paint: Asphaltic type.

G. Sealant: Non-staining, elastomeric, skinning.

I. Profile Closure: Manufacturer's Standard to match and seal voids of wall panels and roof panels; EPT or EPDM type.

J. Trim, Closure Pieces, Caps, Flashings, Rain Water Diverter, Fascias Infills, and accessories: Same material, thickness and finish as exterior sheets; brake formed to require profiles.

2.08 METAL DOORS AND FRAMES – see Section 08110

2.09 COILING DOORS – see Section 08330

2.10 METAL BUILDING CURBS -See Roof Plan & Details

2.11 FABRICATION - FRAMING

A. Fabricate members in accordance with AISC Specification for plate, bar, tube or rolled shapes.
B. Anchor Bolts: Formed with bent or straight shank, assembled with template for casting into concrete.

C. Provide framing for doors, ventilators, and louver openings.

2.12 FRAMING MEMBER THICKNESS (MINIMUMS)

A. Cold-Formed Primary Framing Members: 14 gage.

B. Cold-Formed Secondary Framing Members: 16 gage.

C. Intermediate Pipe Columns: 3/16".

D. Webs of Welded Built-up Members: 1/8".

E. Flanges of Welded Built-Up Members: 3/16".

F. Bracing Rods: 1/2 " diameter.

2.13 TYPICAL FRAMING COMPONENTS

A. Rigid Frames, Wind Unit Frames and Canopy Beams and Mezzanine Floor:
   1. Fabricate rigid frames from hot-rolled structural steel. Provide built-up "I-Beam" shape rigid frames consisting of parallel flanged beams. Provide frames factory welded and shop painted. Furnish frames complete with attachment plates, bearing plates and splice members. Factory drill frames for bolted field assembly.
   2. Provide length of span and spacing of frames as indicated. Slight variations in length of span and frame spacing may be acceptable if necessary to meet manufacturer's standard.

B. Bearing End Frames: Consist of columns at the building corners and a continuous rafter beam supported by the end wall columns.

C. End wall Columns: 8 inch min. deep cold-formed "C" sections or welded built-up "I" shapes.

D. Purlins and Girts: Roll-Formed "Z" sections or open web joists, depth as required.

E. Eave Struts: "C" sections formed so as to provide adequate backup for both roof and wall panels at the building eaves.

F. Wind Bracing (When required)
   1. Method: Diagonal rod bracing in both roof and sidewalls as required by calculations.
   2. Reinforcing: Double roof purlins, inter-connected by diaphragms, in between the rigid frames at all points of attachment of diagonal roof bracing.
   3. Provide temporary bracing during erection of structure.

G. Wind Bracing Omission: Permissible where the diaphragm strength of the roof covering is adequate to resist the longitudinal wind forces. Diaphragm action shall not be assumed for standing seam roof

system.

H. Flange Bracing: Inside flange of all rigid frames shall be braced laterally by angles connected to the flange and web of the frame and to the web of the purlin or girt so that the allowable compressive stress is adequate for any combination of loading.

I. Base Support: A continuous member shall be provided to which the base of the wall covering may be attached. This member shall be:
   1. A continuous 18 gage; 1.25 ounce coating class, galvanized, box-shaped member cast integrally with concrete foundation or 3 x 3 x 1/4" (76 x 76 x 6.4 mm) steel angle anchored to slab with 3/8 inch (9.5 mm) bolt and expand shield at 48 inch (1.22 m) centers; zinc coated 1.80 coating class.

J. Framed Openings: Structural framing members for all openings shall be adequate for the specified design loads. Framing members who are exposed to weather shall be galvanized steel.

K. Bolts: ASTM A325 bolts tightened by the calibrated wrench method shall have a hardened washer under the element (nut and bolt head) turned in tightening.

2.14 FABRICATION - WALL AND ROOF SYSTEMS

A. Siding: Minimum 24 gauge metal thickness, R profile or match metal wall panels on existing adjacent buildings, 1 1/4 inch (32 mm) deep, lapped edges; 36 inch (.91 m) coverage

B. Roofing: Type: VSR Roof System, Butler Manufacturing Co., or approved equal, concealed fasteners mechanically seamed, smooth panels with strengthen flutes, 22 gauge, G90, Kynar 500 coating system with 20 year warranty, standing seam profile, male/female edges; 16 inch (.6 m) coverage, UL Wind Uplift Classification 90 rating.

C. Liner: Minimum 24 gauge metal thickness V crimped, Profile L12B male/female edges; 12 inch (305 mm) coverage.

D. Soffit Panels: Perforated and non-perforated, minimum 24 gauge metal thickness V crimped profile, L12B male/female edges; 12 inch (305 mm) coverage.

E. Girts/Purlins: Rolled formed structural shape to receive siding, roofing and liner sheet; minimum .0598 inch (1.5 mm) thickness.

F. Internal and External Corners: Same material thickness and finish as adjacent material, profile brake formed shop cut and factory mitered to required angles. Back brace mitered internal corners with .0239 inch (.6 mm) thick sheet.

G. Expansion Joints: Same material and finish as adjacent material where exposed, (.0359) inch (.91mm) thick, manufacturer's standard brake formed Infill type, of profile to suit system.

H. Flashings, Closure Pieces, Fascia, Infills, Caps, and accessories: Same material and finish as adjacent material, profile to suit system or formed as detailed, 24 gauge minimum.

I. Fasteners: To maintain load requirements and weather tight installation, same finish as cladding, non-

corrosive type.

J. Ventilator: Specification Division 15000 Mechanical and 16000 Electrical.

K. Wall Louvers: As shown on drawings.

L. Fasteners:
1. Washers: Neoprene; ASTM D 735.
2. Pop Rivets: Aluminum
3. Self Tap Screws, Bolts: Galvanized

M. Panel Anchors:
1. Purlin Insulation: Required by use of spacer blocks.
2. Clips: Designed for locking into seams; with movable tabs to allow expansion and contraction.

N. Roof Curbs, Pipe Flashing:
1. Size, Number: As shown on the Drawings.
2. Installation: Required, except where materials only are specified.
3. Curbs: Specially formed 1/8" (3 mm) thick glass fiber reinforced polyester with 15 (.3 mm) mil gel coat surfacing; cricket at high side.
4. Pipe Flashing: E.P.D.M. rubber or Dupont "Nordel"; sized to fit pipes.
5. Optional Curb Construction: 20 ga. (.91 mm) zinc coated steel.
6. Special Curbs: Refer to Drawings.

O. Batt Insulation
1. Manufacturers:
   a. CertainTeed Insulation
   b. JohnsManville
   c. Owens Corning Fiberglas
2. Components:
   a. Batt Insulation- ASTM C665; preformed glass fiber batt conforming to the following:
      1. Thermal resistance of R 10 (3” nominal thickness)
      2. Facing on both sides with non-permeable polymeric covering.
   b. Tape- Polyethylene self-adhering tape
   c. Support- Stainless steel chicken-wire, hexagonal wire mesh for retaining insulation. Fasten to structure with stainless steel fasteners.

2.15 WEATHER-SEAL SCREWS

A. Type: No. 12-14 self-drilling or self-tapping.

B. Screw Shank: Carbon steel, plated with 0.0003" zinc or cadmium.

C. Washers: Recessed into head; neoprene, EPDM, PVC.
1 Head: 3/8" (9.5 mm) hex drive.
3. Head Cap: Zamak alloy or stainless steel.

D. Paint Finish:

1. Required, except, on unpainted panels
2. Color to match panels
3. Paint durability to match panels

2.16 SEALER

A. Locations: Sidelaps, endlaps and flashing. In addition, seal to abutting construction to make a water and airtight seal.

B. Material:
1. General Description: Fiber-filled, pressure sensitive tape, non-asphaltic, non-shrinking, non-drying, and non-toxic and shall have superior adhesion metals, plastics and painted surfaces at temperatures from 30 Degrees to +160 Degrees F. The material shall have a flashpoint of at least 300 Degrees F, and shall not flow at 200 Degrees F.
2. Minimum Specification: Equal to Gov. Spec. No. MIL-C-18969, Type II, Class B.
3. Size: 1/2" x 3/32" or 1" x 1/8".

2.17 FLASHING AND TRIM

A. Locations: At the rake, corners and eaves; at framed openings and whenever necessary to provide weather tightness and finished appearance.

B. Ridge Panel: Formed to match the slope and profile or adjoining panels. Provide continuous ridge vent.

C. Material, Finish: Match painted wall panels.

2.18 CLOSURES (PROFILE)

A. Solid or closed cell, preformed Ethylene-Propylene-Diene-Monomer (EPDM) or Ethylene Propylene Terpolymer (EPT) color gray, matching the profile.

2.19 FABRICATION GUTTERS AND DOWNSPOUTS

A. Fabricate of same material and finish as roofing metal.

B. Form gutters and downspouts of profile and size to collect and remove water. Fabricate with connection pieces.

C. Form sections in maximum possible lengths. Hem exposed edges. Allow for expansion at joints not to exceed 50 feet (15 m) spacing.

D. Fabricate support straps of same material and finish as roofing metal, color as selected.

2.20 FINISHES

A. Primarily Framing Members: Clean, prepare and shop prime to SSPC Manual requirements. Do not prime surfaces to be field welded.

B. Exterior Surfaces of Wall and Roof Components and Accessories: Precoated enamel on steel of fluorocarbon Kynar 500 finish, color as selected by architect.

C. Interior Surfaces of Wall Under Panel Components and Accessories: Precoated enamel on steel of fluorocarbon Kynar 500 finish, white color.

PART 3 EXECUTION

3.01 EXAMINATION

A. Verify that foundation, floor slab, mechanical and electrical utilities, and placed anchors are in correct position.

3.02 ERECTION

A. Erect framing in accordance with AISC Specification.

B. Provide for erection and wind loads. Provide temporary bracing to maintain structure plumb and in alignment until completion of erection and installation of permanent bracing. Locate braced bays as indicated.

C. Set column base plates with non-shrink grout to achieve full plate bearing.

D. Do not field cut or later structural members without approval.

E. After erection, prime welds, abrasions, and surfaces not shop primed.

3.03 ERECTION - PURLINS AND GIRTS

A. Provide rake or gable purlins with tight fitting closure channels and fascias.

B. Locate and space wall girts to suit door and window arrangements and heights.

C. Secure purlins and girts to structural framing and hold rigidly to a straight line by sag rods.

D. Purlins under steel roof decking to receive single ply roofing shall be spaced a maximum of 5 feet on centers or as shown on drawings.

3.04 ERECTION - BRACING

A. Provide diagonal rod or angle bracing in both roof and sidewalls as required.

B. Movement resisting frames may be used in lieu of sidewall rod bracing, to suit manufacturer's standards.

C. Where diaphragm strength of roof coverage is adequate to resist wind forces, rod or other forms of bracing may be omitted.

3.05 ERECTION - FRAMED OPENINGS

A. Provide steel angles and bent plates to reinforce openings and to carry loads and vibrations imposed, including equipment furnished under mechanical and electrical work. Securely attach to building structural frame.

B. Provide 2 x 2 x 1/4 inch (50.8 x 50.8 x 6.4 mm) steel angles for openings 6 to 18 inches (152 to 457 mm) in size. Openings over 18 inches (457 mm) in size shall be reinforced with 4 x 4 x 1/4 inch (102 x 102 x 6.4 mm) steel angles in accordance with Section 05210. At roof curbs, where indicated, reinforce openings with 6 x 6 x 1/4 inch (152 x 152 x 6.4 mm) steel angles and 1/4 inch (6.4 mm) bent plates.

3.06 ERECTION - WALL AND ROOFING SYSTEM

A. Install in accordance with manufacturer's instructions.

B. Exercise care when cutting pre-finished material to ensure cuttings do not remain on finish surface.

C. Fasten cladding system to structural supports, aligned level and plumb.

D. Locate end laps over supports. End laps minimum 6 inches (152 mm). Place side laps over bearing.

E. Provide expansion joints where indicated.

F. Use concealed fasteners at roof.

G. Use exposed fasteners at walls.

H. Install insulation and vapor retarder utilizing squeeze for attachment. Place wire mesh under vapor retarder for support between framing members.

I. Roof Panels: Continuous from ridge to eave for buildings 60' wide or less.

J. Sidewall Panels: Continuous from eave line to below the column base plated.

K. End wall Panels: All end wall panels shall be continuous to the roof line except where panel lengths are exceeded. Where panel lengths are exceeded, end wall panels shall be continuous to the eave line with panels above the eave line continuous to the roof line. Panels spliced at the eave line shall be square cut. Panels continuous to roof line shall be bevel cut to correspond to the roof slope. All endlaps for end wall panels where required shall be a minimum of 4 inches and shall occur at a wall girt.

L. Roof Laps: Before securing, roof panels shall be sealed with a continuous ribbon of tape sealer, unless the optional anti-capillary groove is specified.

M. Roof Fastenings
   1. Roof panels shall be secured with concealed panel clips that are secured to secondary structure per manufacturer’s requirements.

2. Side laps of roof panels shall be mechanically.

N. Wall Fastenings
1. Wall panels shall be secured to girts with minimum No. 14 sheet metal screws at a maximum spacing of 12 inches.
2. At the endlaps of rib sheets, the maximum spacing shall be 6 inches (152 mm).
3. At the endlaps of "Hi-Rib" panels the fasteners shall be attached each side of the major rib.
4. At the sidelaps of "A" panels No.10 sheet metal screws shall be placed a maximum of 18 inches (457) mm) on center.

O. Install sealant and gaskets to prevent weather penetration.

3.07 ERECTION - GUTTER AND DOWNSPOUT

A. Rigidly support and secure components. Joint lengths with formed seams sealed watertight. Flash and seal gutters to downspouts.

B. Apply bituminous paint on surfaces in contact with cementitious materials

C. Slope gutters minimum 1/8 inch/ft (3 mm/m).

D. Install Pre-cast concrete splash blocks 18 x 36 inch (457 x 914 mm) under each downspout.

3.08 INSTALLATION LINER PANELS

A. Inspection:
1. Check supporting members for correct layout and alignment.
2. Verify that surfaces to receive liner panels are free of debris.
3. Do not proceed with installation until defects are corrected.

B. Installation
1. Install liner panels and accessories in accordance with the manufacturer’s instructions.
2. Do not stretch or compress panel side-lap interlocks.
3. Secure panels without warp or deflection.

3.09 INSTALLATION - ACCESSORIES

A. Install door frame, door, exhaust fan, overhead door, accessories, window and glass, and louvers in accordance with manufacturer's instructions.

B. Seal wall and roof accessories watertight and weather tight with sealant.

C. Batt Insulation- Install at roof spaces where indicated on the Drawings without gaps or voids. Install with chicken wire for support, trim insulation neatly to fit spaces, insulate all gaps and voids, fit insulation tight in spaces and tight to exterior side of mechanical and electrical services within plane of insulation. Install vapor retarder membrane facing warm side of building spaces with lapped ends and side flanges of membrane over framing members. Tape edges and tears in membrane.

3.10 TOLERANCES

A. Framing Members: 1/4 inch (6 mm) from level; 1/8 inch (3 mm) from plumb
B. Siding and Roofing: 1/8 inch (3 mm) from true position.

END OF SECTION

SECTION 15050
BASIC MECHANICAL REQUIREMENTS

PART 1 - GENERAL

1.1 SECTION INCLUDES

A. Basic Mechanical Requirements specifically applicable to Division 15 Sections.

1.2 REFERENCES, STANDARDS, AND REGULATORY REQUIREMENTS:

The following state and local codes, ordinances, and industry standards shall be complied with on this project as applicable:

A. The "Authority Having Jurisdiction" over the project described by these documents is the Owner, Texas Department of Transportation, as an Agency of the State of Texas. As such, it is required that the installation shall meet the minimum standards prescribed in the latest editions of the following listed codes and standards, which are made a part of these Specifications.

B. American National Standards Institute (ANSI): All current editions of applicable manuals and standards.

C. American Society of Mechanical Engineers (ASME): Boiler and Pressure Vessel Codes

D. Air Conditioning and Refrigeration Institute Standards (ARI): All standards related to refrigeration and air conditioning equipment and piping furnished under these Specifications.

E. Sheet Metal and Air Conditioning Contractors National Association, Inc. (SMACNA): All current editions of applicable manuals and standards.

F. Air Moving and Conditioning Association (AMCA): All current editions of applicable manuals and standards.

G. American Gas Association Publications (AGA): Directory of Approved Gas Appliances and Tested Accessories

H. American Society of Testing Materials (ASTM): All current editions of applicable manuals and standards.

I. National Fire Protection Association Standards (NFPA):

1. NFPA No. 17, Dry Chemical Extinguishing Systems
2. NFPA No. 33, Spray Application using Flammable and Combustible Materials
3. NFPA No. 54, Gas Appliances, Piping, National Fuel Gas Code
4. NFPA No. 70, National Electrical Code
5. NFPA No. 72A, Local Protective Signaling Systems
6. NFPA No. 72E, Automatic Fire Detectors
7. NFPA No. 90A, Air Conditioning Systems
8. NFPA No. 91, Blower & Exhaust Systems
9. NFPA No. 101, Life Safety Code
10. NFPA No. 211, Chimneys, Fireplaces and Vent Systems
11. NFPA No. 241, Standard for Safeguarding Construction, Alteration and Demolition Operations
12. NFPA No. 255, Method of Test of Surface Burning Characteristics of Building Materials

13. NFPA No. 258, Standard Research Test Method for Determining Smoke Generation of Solid Materials

J. National Electrical Manufacturers' Association (NEMA): All current editions of applicable manuals and standards.

K. Local Fire Department and the State Fire Marshall, as may be applicable to construction on this site.

L. National Sanitation Foundation (NSF): All current editions of applicable manuals and standards.

M. Occupational Safety and Health Act (OSHA): All applicable safety standards.

N. Texas Occupational Safety Act: All applicable safety standards.

O. International Building Code, latest edition.

P. Uniform Mechanical Code, latest edition.

Q. Uniform Plumbing Code, latest edition.

R. ASRAE 90.1 - Energy Code - latest addition.

S. Refer to Specification Sections hereinafter bound for additional Codes and Standards.

T. All materials and workmanship shall comply with all applicable state and national codes, Specifications, and industry standards. In all cases where Underwriters' Laboratories, Inc. has established standards for a particular type material, such material shall comply with these standards. Evidence of compliance shall be the UL "label" or "listing" under Re-Examination Service.

1.3 GENERAL MATERIALS AND EQUIPMENT REQUIREMENTS:

A. **Note that no asbestos-bearing, or solvent based, or lead containing materials shall be used on this project. If any prohibited materials are installed, all of the material, including the underlying material, shall be removed and disposed of as required by local, state, and federal requirements.**

B. The Contractor shall execute all work hereinafter specified or indicated on accompanying Drawings. Contractor shall provide all equipment necessary and usually furnished in connection with such work and systems whether or not mentioned specifically herein or on the Drawings.

C. The Contractor shall be responsible for fitting the material and apparatus specified in this division into the building and shall carefully lay out the specified work at the site to conform with the structural conditions, to avoid all obstructions, to conform to the details of the installation and thereby to provide an integrated installation operating as a complete set of systems.

D. Verification of Dimensions: The Contractor shall be responsible for the coordination and proper relation of his work to the building structure and to the work of all trades. The Contractor shall visit the premises and become thoroughly familiarize with all details of the work and working conditions, to verify all dimensions in the field, and to advise the Design Engineer of any discrepancy before performing any work. Adjustments to the work required in order to facilitate a coordinated installation shall be made at no additional cost to the Owner or the Design Engineer.

E. The Mechanical, Plumbing, and associated Drawings are necessarily diagrammatic by their nature, and are not intended to show every connection in detail or every pipe or conduit in its exact location. These details are subject to the requirements of standards referenced elsewhere in these specifications, and structural and architectural conditions. The Contractor shall carefully investigate structural and finish conditions and shall coordinate the separate trades in order to avoid interference between the various phases of work. Work shall be organized and laid out so that it will be concealed

in furred chases and suspended ceilings, etc., in finished portions of the building, unless specifically noted to be exposed. All work shall be installed parallel or perpendicular to the lines of the building unless noted otherwise.

F. When the Drawings do not give exact details as to the elevation of pipe, conduit and ducts, the Contractor shall physically arrange the systems to fit in the space available at the elevations intended with proper grades for the functioning of the system involved. Piping, exposed conduit and the duct systems are generally intended to be installed true and square to the building construction, and located as high as possible against the structure in a neat and workmanlike manner. The Drawings do not show all required offsets, control lines, pilot lines and other location details. Work shall be concealed in all finished areas.

G. Storage at Site: The Contractor shall not receive material or equipment at the job site until there is suitable space provided to properly protect equipment from rust, drip, humidity, and dust damage.

H. Capacities and capabilities of materials and equipment specified or scheduled for this project shall be not less than those indicated. In addition, the materials and equipment shall be such that no component or system becomes inoperative or is damaged because of startup or other overload conditions.

I. Conformance with Agency Requirements: Where materials or equipment are specified to be approved, listed, tested, or labeled by the Underwriters' Laboratories, Inc. (UL), or constructed and/or tested in accordance with the standards of the American Society of Mechanical Engineers (ASME) or the Air Moving and Conditioning Association (AMCA), the Contractor shall submit proof that the items furnished under this Section of the Specifications conform to such requirements. The label of the Underwriters Laboratories, Inc., applied to the item will be acceptable as sufficient evidence that the items conform to such requirements. The ASME stamp and the AMCA label will be acceptable as sufficient evidence that the items conform to the respective requirements.

J. Nameplates: Each major component of equipment shall have the manufacturer's name, address, and catalog number on a plate securely attached to the item of equipment. All data on nameplates shall be legible at the time of Final Inspection. Under no circumstances shall any nameplate be painted over for any reason. If a new or existing nameplate is painted over, the nameplate shall be restored to as new condition, or replaced with a new nameplate provided by the manufacturer.

K. Protection from Moving Parts: Belts, pulleys, chains, gears, couplings, projecting setscrews, keys, and other rotating parts shall be fully enclosed or properly guarded for personnel protection.

1.4 DEFINITIONS: (Note: These definitions are included here to clarify the direction and intention of this specification. The list given here is not by any means complete. For further clarification as required, contractor shall contact the designated owner's representative.)

A. AND/OR: Where "and/or" is used in these Specifications or on the Drawings, it shall mean "that situations exist where either one or both conditions occur or are required and shall not be interpreted to permit an option on the part of the Contractor.

B. APPROVE: Where used in conjunction with Architect's/Engineer's response to submittals, requests, applications, inquiries, reports and claims by Contractor, the meaning of term "approved" will be held to limitations to Architect's/Engineer's responsibilities and duties as specified in General and Supplementary Conditions. In no case will "approval" by Architect/Engineer be interpreted as a release of Contractor from responsibilities to fulfill requirements of contract documents or to extend Architect's/Engineer's responsibility into Contractor's area of construction supervision and job safety.

C. ARCHITECT (or DESIGN ARCHITECT): The “Architect” or “Design Architect” is defined as the architect whose seal appears on the construction specifications title page and on the drawings for the particular area under consideration.

D. AS REQUIRED: Where "as required" is used in these Specifications or on the drawings, it shall mean "that situations exist that are not necessarily described in detail or indicated that may cause the contractor certain complications in performing the work described or indicated. These complications entail the normal coordination activities expected of the Contractor where multiple trades are involved and new or existing construction causes deviations to otherwise simplistic approaches to the work to be performed. The term shall not be interpreted to permit an option on the part of the Contractor to achieve the end result."

E. AUTHORITY HAVING JURISDICTION: The Texas Department of Transportation, as an agency of the State of Texas is the “Authority Having Jurisdiction” in any matter of code assignment, interpretation, etc., as applies to this project. In many cases, at the Owners option, the Authority Having Jurisdiction may choose to apply the policies and procedures of an Authority not having jurisdiction, and as such, delegate its authority over some issues. In the event that some of its authority has been delegated to another Authority, such delegation will be specifically delineated in these specifications. In many instances the sections of the specifications will include references which will indicate codes, standards, and regulations which have bearing on the project, and will be enforced by the AUTHORITY HAVING JURISDICTION. The Owner may, at its option and at any time, defer to a local jurisdiction as the AUTHORITY HAVING JURISDICTION. This action, if taken, shall not subrogate any of the authority of the Owner, nor have any bearing on other unrelated requirements of these specifications.

F. CONCEALED: “Concealed” areas are those areas which cannot be seen by the building occupants, such as inside walls or above ceilings.

G. DIRECTED, REQUESTED, etc.: Where not otherwise explained, terms such as "directed", "requested", "authorized", "selected", "approved", "required", "accepted", and "permitted" mean directed by Architect/Engineer", "requested by Architect/Engineer" and similar phrases. However, no such implied meaning will be interpreted to extend Architect's/Engineer's responsibility into Contractor's area of construction supervision and job safety.

H. ENGINEER (or DESIGN ENGINEER or ENGINEER OF RECORD): The “Engineer” or “Design Engineer” or “Engineer of Record” is defined as the engineer whose seal appears on the construction specifications title page and on the drawings for the particular area under consideration. Note that in some cases, the work of two or more Engineers may appear on the same drawing or document. In that case, the area of responsibility of each Engineer will be noted in the area of each signed seal.

I. EXPOSED: “Exposed” areas are all areas which are exposed to view by the building occupants, including under counters, inside cabinets and closets, plus all mechanical and electrical rooms.

J. FURNISH:

1. The term "furnish" is used to mean "supply and deliver to project site, ready for unloading, unpacking, assemble, installation, and similar operations."

2. Where "furnish" applies to work for which the installation is not otherwise specified, "furnish" in such case shall mean "furnish and install."

K. INDICATED: The term "indicated" is a cross reference to graphic representations, notes or schedules on drawings, to other paragraphs or schedules in the Specifications, and to similar means of communicating the requirements of the contract documents. Where terms such as "shown", "noted", "scheduled", and "specified" are used in lieu of "indicated", it is for the purpose of helping the reader locate the cross reference, and no limitation of location is intended except as specifically noted.

L. INSTALL: The term "install" is used to describe operations at project site including "unloading, unpacking, assembly, erection, placing, anchoring, applying, working to dimension, finishing, curing, protecting, cleaning and similar operation."

M. OWNER: As used in these specifications, “Owner” means the Texas Department of Transportation, as represented by the assigned designee.

N. PROVIDE: The term "provide" means "to furnish and install, complete and ready for intended use."

1.5 UTILITY CONNECTIONS AND INSPECTIONS:

A. General: Refer to DIVISION 1 for construction phasing and time increments.

B. Fees and Costs: If, during the course of the construction, a need arises to buy utilities, the Contractor shall pay all fees attendant thereto. If the City or other privately or publicly owned utility piping or electrical cable needs to be extended, relocated, or terminated, the Contractor shall pay all permits and construction/inspection fees associated with that particular work, the costs for which shall be included in the Contract price, including the cost of setting meters.

C. All work performed on this project is under the authority of the State of Texas, however, some local construction fees or construction or inspection permits may be required for new service taps, or new or modified connections to City or utility company controlled services. Refer to the Division 1 Section of specifications on “Special Conditions” for clarification, or contact the regulating entity directly. Note also that if inspections by personnel of jurisdictions other than TxDOT are specifically required by this document, then the Contractor is responsible for any fees or permits in connection to those requirements.

D. Compliance: The Contractor shall comply in every respect with all requirements of the National Fire Protection Association, the local Fire Department requirements and all utility company requirements. In no case does this relieve the Contractor of the responsibility of complying with these Specifications and Drawings where specified conditions are of higher quality or quantity than the requirements of the above-specified authorities. Where requirements of the Specifications and Drawings are more lenient than the requirements of the above authorities, the Contractor shall make installations in compliance with the requirements of the above authorities with no extra compensation.

1.6 COORDINATION OF THE CONTRACT DOCUMENTS:

A. The interrelation of the Specifications, the Drawings, and the schedules are as follows: The Specifications determine the nature and quality of the materials, the Drawings establish the quantities, dimensions and details, and the schedules give the capacities and performance characteristics. If the Contractor requires additional clarification, a request shall be submitted in writing, and a response will be given in writing.

B. Should the Drawings or Specifications conflict within themselves, or with each other, the requirement with the greatest quantity and/or the highest quality shall prevail. The decision of the engineer of record for the system being installed shall be final.

1.7 FUTURE WORK:

A. The work described in the drawings shall be performed under this contract. It shall be noted that certain equipment and systems have been sized to anticipate a possible future addition to the building. It is imperative that the Contractor provide and install the equipment and systems as shown in the drawings and schedules, of the sizes, capacities and dimensions indicated.

1.8 SUBMITTALS:

A. Submit under provisions of UGC (the "Uniform General Conditions") and Special Conditions Section of the Specifications, and as required herein.

B. Mark all submittal literature to indicate the precise selection of materials and equipment being submitted. Note that if the specific model or material is not indicated in the submittal, and there is more than one choice possible, the submittal may be rejected, and resubmittal will be required.

C. Changes in Contract requirements will not be granted and shall not be implied by approval of submitted alternative materials and equipment. Changes will only be effected through the Change Order process, in writing.

D. Proposed Products List: Include all equipment and materials specified in the following sections:

E. Provide submittals as required in each Division 15 section. Submit shop drawings and product data grouped to include complete submittals of related systems, products, and accessories in a single submittal.

F. Submit Fabrication Drawings whenever (1) equipment proposed varies in physical size and arrangement from that indicated on the Drawings, thus causing rearrangement of equipment space, (2) where tight spaces require extreme coordination between ductwork, piping, conduit, and other equipment, (3) where called for elsewhere in these Specifications; and (4) where specifically requested by the Design Engineer. Fabrication Drawings shall be made at no additional charge to the Owner or the Design Engineer.

G. All required Fabrication Drawings, except as noted otherwise, shall be prepared at a scale of not less than 1/4" = 1'-0". Fabrication Drawings for ductwork and air handling units shall be drawn at a minimum scale of 3/8" = 1'-0". Submit three blueline prints of each Fabrication Drawing to the Design Engineer for review. Reproduction and submittal of the Construction Documents is not acceptable. The Engineer will review the drawing and return one print with comments.

1.9 SUBSTITUTION OF MATERIALS AND EQUIPMENT:

A. It is not the intent of the Drawings and/or Specifications to limit products to any particular manufacturer or to discriminate against an "APPROVED EQUAL" product produced by another manufacturer. Some products of a particular manufacturer may be mentioned to set a definite standard for acceptance and to serve as a reference in comparison with other products. On the other hand, when a manufacturer's name appears in these Specifications or in the Drawings, it shall not be interpreted that the manufacturer is unconditionally acceptable as a provider of equipment for this project. The successful manufacturer or supplier shall meet all of the provisions of the appropriate specification(s).

B. The specified products have been used in preparing the Drawings and Specifications and thus establish minimum qualities with which substitutes must be at least equal to be considered acceptable. The burden of proof of equality rests with the Contractor. The decision of the Engineer is final.

C. In the event that the Contractor submits a proposal for a substitution, and the review and negotiation of the substitution (if handled in a timely, expedited manner) results in a delay of the contract work, then a reasonable extension of time for the contract may be allowed.

1.10 MATERIALS AND WORKMANSHIP:

A. All materials, unless noted otherwise, shall be new, free from all defects, suitable for the intended use, and of the best quality of their respective kinds.

B. Materials and equipment shall be installed in accordance with the manufacturer's recommendations and the best standard practice for the type of work involved.

C. All work shall be executed by mechanics and contractors skilled in their respective trades, and the installations shall provide a neat, precise appearance.

D. Materials and/or equipment damaged in shipment or otherwise damaged prior to installation shall not be repaired, but shall be replaced with new materials and/or equipment.

E. Similar equipment shall be products of the same manufacturer. For example, all air conditioning equipment shall be manufactured and supplied by the same manufacture, and all faucets, stops and hosebibbs shall be products of the same manufacturer, with the exception that freezeproof hosebibbs may be products of a different manufacturer than the rest of the faucets on the project.

1.11 FLAME SPREAD PROPERTIES OF MATERIALS:

A. Materials and adhesives incorporated into this project shall conform to NFPA Standard 255, "Method of Test of Surface Burning Characteristics of Building Materials". The classification shall not exceed a flame spread rating of 25, nor exceed a smoke developed rating of 50, for all materials, adhesives, finishes, etc., specified for each system.

1.12 MANUFACTURER'S RECOMMENDATIONS:

A. The manufacturer's published directions and/or recommendations shall be followed in the delivery, storage, protection, installation, piping, and wiring of all equipment and material. The Contractor shall promptly notify the Engineer, in writing, of any conflict between the requirements of the Contract Documents and the manufacturers' directions, and shall obtain the Engineer's guidance before proceeding with the work. Should the Contractor perform any such work that does not comply with the manufacturers' directions or such instructions from the Owner, the Contractor shall bear all costs arising in connection with the deficiencies.

1.13 SPACE AND EQUIPMENT ARRANGEMENT:

A. The size of mechanical and electrical equipment indicated on the Drawings is approximate and based on the dimensions of a particular manufacturer. While other manufacturers may be acceptable, it is the responsibility of the Contractor to determine if the equipment proposed by the Contractor will fit in the space.

B. All equipment shall be installed in a manner to permit access to all surfaces. All valves, motors, drives, filters, and other accessory items shall be installed in a position to allow removal for service without disassembly of another part.

C. All equipment and piping shall be installed in a manner to provide the greatest amount of clearance for access and maintenance of systems and equipment. Installation of piping and equipment which blocks personnel access to all parts of chases or mechanical spaces is prohibited.

1.14 PROTECTION:

A. The Contractor shall at all times take such precautions as may be necessary to properly protect all materials and equipment from damage from the time of delivery until the completion of the work. This shall include the erection of all required temporary shelters and supports to adequately protect any items stored in the open on the site from the weather, the ground and surrounding work; the cribbing of any items above the floor of the construction; and the covering of items in the incomplete building with tarpaulins or other protective covering; the installation of electric heaters in electrical switchgear and similar equipment to prevent moisture damage. Failure on the part of the Contractor to comply with the above will be sufficient cause for the rejection of the items in question.

B. Take particular care not to damage the building structure in performing work. All finished floors and finished surfaces shall be covered to prevent any damage by workers or their tools and equipment during the construction of the building.

1.15 SUPERVISION:

A. Each Contractor and subcontractor shall provide a competent superintendent or foreman for the work of their trade.

B. It shall be the responsibility of the General Contractor to assure that each superintendent studies all Drawings and is familiar with the work to be coordinated with and performed by other trades. The General Contractor shall coordinate the work of all trades and, before material is fabricated or installed, assure that the work will not cause an interference with another trade. Where interferences are encountered, they shall be resolved at the job site by the superintendents involved. Where interferences cannot be resolved without major changes to the Drawings, the matter shall be referred to the Engineer for a ruling. The decision of the Engineer shall be final.

1.16 SITE OBSERVATION:

A. Site observation by the Architect, Engineer, Owner or any representative of the Owner, is for the express purpose of verifying compliance by the Contractor with the Contract Documents, and shall not be construed as construction supervision nor indication of approval of the manner or location in which the work is being performed as being a safe practice or place.

B. The safety of the workers on the site is the responsibility of the Contractor. By entering the site, the Contractor, Subcontractors, and their employees relieve the Owner of any responsibility for their safety, and accept complete responsibility for any unsafe acts or procedures which may cause them harm.

1.17 GUARANTEE:

A. **The Contractor shall guarantee all labor and materials furnished and installed under this contract for a period of one (1) year from date of FINAL ACCEPTANCE by Owner.** Certain work and materials shall be guaranteed for a longer period when so specified. The guarantee shall

cover the repair or replacement without additional cost to the Owner, of any defective material or faulty workmanship.

B. In addition to the above, the Contractor shall warrant all compressors to be free of defect, and shall provide a new compressor, of similar capacity and quality, at no cost to the Owner, if one should fail for any reason, within 5 (five) years of the date of final acceptance. This warranty shall be limited only to the material compressor, and shall not include labor or additional materials, such as Freon charge. Contractor shall provide installation labor and related materials at a reasonable cost.

C. If the Contractor fails to perform under these requirements, then the Uniform and Special General Conditions shall govern any required remedies the Owner may be forced to take.

1.18 CUTTING AND PATCHING:

A. General: Provide openings in all new or existing construction indicated in the drawings, or as necessary for the proper installation of all systems included in the project.

B. Methods of cutting: Openings cut through concrete and masonry shall be made with masonry saws and/or core drills and at such locations acceptable to the Construction Inspector and Design Engineer. Impact-type equipment shall not be used except where specifically acceptable to the Design Architect and Engineer. Openings in precast concrete slabs for pipes, conduits, outlet boxes, etc., shall be core drilled to exact size.

C. Restoration: All openings shall be finished, closed around penetrating materials as specified, or restored to "as-new" condition under the appropriate Specification Section for the materials involved, and shall match remaining surrounding materials and/or finishes.

D. Masonry: Where openings are cut through masonry walls, provide and install lintels or other structural supports to protect the remaining masonry. Adequate supports shall be provided during the cutting operation to prevent any damage to the masonry occasioned by the operation. All structural members, supports, etc., shall be of the proper size and shape, and shall be installed in a manner acceptable to the Design Engineer.

E. Plaster: All mechanical work in areas containing plaster shall be completed prior to the application of the finish plaster coat. Cutting of finish plaster coat will not be permitted.

F. Special Note: No cutting, boring, or excavating which will weaken the structure shall be undertaken.

G. Refer to Division 2 specifications for requirements governing trenching.

1.19 ROOF PENETRATIONS AND FLASHING:

A. Pipe, conduit and duct sleeves, pitch pockets, roof curbs, and flashings compatible with the roofing installation shall be provided and installed by a qualified contractor for all roof penetrations. This shall be the responsibility of the General Contractor.

1.20 OPERATION PRIOR TO COMPLETION:

A. When any piece of mechanical equipment is operable and it is to the advantage of the Contractor to operate the equipment for a purpose other than testing (for a period longer than one hour), the Contractor may do so, providing that the operation is properly supervised, and the Construction Inspector has given written permission. The warranty period shall not commence until such time as

the equipment is operated for the beneficial use of the Owner, or date of substantial completion, whichever occurs first.

B. No equipment shall be operated, even for test purposes, until it has been thoroughly swept and vacuumed clean of dust, dirt, debris, and equipped with the proper filter.

C. Regardless of whether or not the equipment has or has not been operated, the Contractor shall properly clean the equipment, install clean filters, properly adjust, and complete all deficiency list items before final acceptance by the Owner as described in the following paragraph. The date of acceptance and performance certification shall be the same date.

1.21 CHECKING AND TESTING MATERIALS AND/OR EQUIPMENT:

A. Check inspections shall include, but not be limited to, heating, insulation, ventilating equipment, controls, miscellaneous mechanical equipment and such other items hereinafter specified or specifically designated by the Engineer of Record.

B. Commissioning of equipment shall consist of, as a minimum:

1. Verify that installation is as designed and specified in the construction drawings and specifications.
2. Complete manufacturer's recommended installation and startup checks and perform the following:
    a. Inspect for visible damage and correct all damage
    b. Verify manufacturer recommended and designed clearances have been provided
    c. Verify that all service access panels are accessible and hinged doors are fully operational
    d. Check that labels and schedules are clearly visible
    e. Check for and remove all construction debris
    f. Verify that controls are connected and operable
    g. Check for and remove shipping bolts, blocks and tie-downs
    h. Verify that the proper size filters have been provided and are installed properly
    i. Adjust vibration isolators
    j. Check and repair all damaged insulation and vapor barriers
    k. Check all manual and automatic dampers for free operation through their full travel
3. Lubricate bearings on fan
4. Check that fan rotates in correct direction without vibration or binding
5. Start units according to manufacturer's written instructions. Complete startup sheets and attach copy with Contractor's startup report and close out documents. Contractor may use manufacturer's printed startup sheet or a copy of the one attached at the end of this section.
6. Check and record performance of interlocks and protection devices; verify sequences of operation.
7. Operate unit for an initial period as recommended or required by manufacturer or these specifications, whichever is greater.
8. Calibrate and check full function and operation of thermostats.
9. Adjust and check high temperature limits.

10. Check for the free operation of internal isolators, and adjust if necessary.
11. Check controls for correct sequencing of heating, cooling, and normal and emergency shutdown.
12. Record all additional temperatures, pressures, air flows, amperages, etc., required to verify unit's operation at or above specified or scheduled efficiency rating.
13. After startup and performance testing, replace filters, vacuum all coils, lubricate bearings and adjust belts.
14. Demonstrate operation to TxDOT maintenance personnel as detailed in paragraph in Part 3 of this specification section.

1.22 CLEANING AND PAINTING:

A. All equipment furnished by the mechanical subcontractors shall be delivered to the job with a suitable factory protective finish. The following materials shall not be painted: copper, galvanized metal, stainless steel, fiberglass, and plastics such as PVC, PVDF, polypropylene, etc.

B. If painting is required, before painting, materials and equipment surfaces shall be thoroughly cleaned of cement, plaster, and other foreign materials, and all oil and grease shall be removed. Such surfaces shall be carefully wiped and all cracks and corners scraped out. Exposed metal work shall be carefully brushed down with steel brushes to remove rust and other spots and left smooth and clean.

C. Equipment nameplates shall be protected from being painted; suitable protection shall be afforded to the plates to prevent their being rendered illegible due to the painting operation, or receiving any overspray or spatter.

D. Scope of painting for Division 15 work in areas other than those defined as "exposed" is as follows:

1. All fuel piping (natural gas, LPG, etc.) installed under this project shall be painted whether concealed or exposed, in all areas of the project without exception. Fuel piping shall be painted "safety yellow" as defined by OSHA or furnished with manufacturer applied "safety yellow" finish.
2. All uncovered, unprotected steel pipe, supports, exposed pipe and hanger rod threads shall be cleaned and painted with two coats of Tropical Paint Co. No. 77-black asphaltic emulsion. Galvanized steel and copper lines shall not be painted.
3. All canvas finishes including those in concealed spaces shall be painted with one sizing coat if not already sized, containing mildew resistant additive and Arabol adhesive prior to any other specified finish paint.
4. If insulated, steel piping shall be prime-painted prior to insulation.

E. The surfaces to be finish painted shall first be prepared as follows:

1. On canvas finishes pretreat as specified above. Insulated surfaces having vapor barrier jacket exposed to view shall first be painted with one (l) coat of sealer.
2. Galvanized and black steel surfaces shall first be painted with one (1) coat of P&L (Pratt & Lambert) galvanized metal primer. Primer may be eliminated on concealed fire and gas piping.
3. Painted aluminum surfaces shall first be painted with one (1) coat of P&L zinc chromate primer.
4. Cast iron pipe shall first be primed with a "nonbleed" primer.
5. The underside of all cast iron sinks not recessed in a cabinet are included as items to be painted in exposed areas.

6. All ferrous metal surfaces without a protective finish and not galvanized in exposed and concealed areas including chases, and above ceilings shall be painted with two (2) coats of P&L zinc chromate primer as the construction progresses to protect against oxidation and deterioration.

PART 2 - PRODUCTS

(NOT USED)

PART 3 - EXECUTION

3.1 INSTALLATION METHODS:

A. Support: All piping, ducts and conduits shall be adequately and properly supported from the building structure by means of hanger rods or clamps fastened to the building structure as herein specified. Sufficient support shall be provided and installed to restrain the movement of equipment, piping, ductwork and conduits from lateral movement during operation.

B. All pipe, conduits, etc., shall be cut accurately to measurements established from the actual building conditions and shall be worked into place without springing or forcing. All ducts, pipes and conduits run exposed in machinery and equipment rooms shall be installed parallel to the building lines, except that piping shall be sloped to obtain the proper pitch. Piping, ducts and conduits run in furred ceilings, etc., shall be similarly installed, unless noted otherwise. Conduits in furred ceilings and in other concealed spaces shall be neatly grouped and racked. All conduit and pipe openings shall be maintained in a sealed condition until the systems are closed with final connections.

C. All openings through all floors, walls, and roofs, etc., regardless of material, shall be sleeved for piping, ductwork, conduit, cable trays, etc.. All penetrations shall be sleeved. Sleeves shall be set in new construction before concrete is poured, as cutting holes through any part of the concrete will not be permitted unless acceptable to the Architect/Engineer. See Section 15060 for sleeve specifications.

3.2 REQUIRED INSPECTIONS:

A. Prior to the installation of any ceiling material, gypsum, plaster, or acoustical board, the Contractor shall notify the construction inspector so that arrangement can be made for an inspection of the above-ceiling area about to be “sealed” off. The Contractor shall give as much advance notice as possible, but no less than five (5) working days.

B. All above-ceiling areas will be subject to a formal inspection before ceilings are installed, or installation is otherwise concealed from view. All mechanical and electrical work at and above the ceiling, including items supported by the ceiling grid, such as air inlets or outlets and lighting fixtures, shall be complete and installed in accordance with contract requirements, including power to lighting fixtures, fans, and other powered items. Adequate lighting shall be provided to permit thorough inspection of all above-ceiling items. The purpose of this inspection is to verify the completeness and quality of the installation of the air conditioning systems, the electrical systems, the plumbing systems, and any other special above ceiling systems. The ceiling supports (tee bar or lath) shall be in place so that access panel and light fixture locations are identifiable and so that clearances and access provisions may be evaluated.

C. No ceiling materials may be installed until the resulting deficiency list from this inspection is satisfied and the Construction Inspector has given approval.

3.3 TESTING:

A. Tests for specific systems and equipment are specified in associated specification sections or in the drawings. All tests specified or indicated shall be performed and witnessed by the Owner. All tests shall be individually documented, and the test report for each shall be included in the final documentation submitted to the Owner at the completion of the project. Data shall be delivered to the Design Engineer as specified under "Requirements for Final Acceptance". The documentation shall include as a minimum:

1. Contractor firm name, supervisor's name, and name of personnel performing test.
2. Date and time of beginning of test, and date and time of test completion.
3. Description of equipment or system being tested.
4. Description of test being performed.
5. Description of outcome of test.
6. Dated signatures of person performing test, Contractor's supervisor, and Owner's representative, including legibly printed names and titles.

B. The Construction Inspector shall be notified in writing at least 5 working days prior to each test and other Specification requirements requiring action on the part of the Construction Inspector. All equipment shall be placed in operation and tested for proper automatic control requirements before the balancing agency starts their work.

3.4 TRAINING

A. When required in a Division 15 specification section, Contractor shall provide a minimum of six (6) hours of training for a minimum of four (4) of the Owners personnel, on the operation and maintenance of the mechanical and plumbing systems, including filter replacement, the operation and programming of thermostats, and the location of access doors to hidden isolation valves, water hammer arrestors, etc. Contractor shall provide complete, written, manufacturers literature on all mechanical and plumbing systems for each person trained.

END OF SECTION

SECTION 15060
SUPPORTS AND ANCHORS

PART 1 - GENERAL

1.1 SECTION INCLUDES:

A. Pipe and equipment hangers and supports.

B. Equipment bases and supports.

C. Sleeves and seals.

D. Flashing and sealing equipment and pipe stacks.

1.2 RELATED SECTIONS:

A. Section 15050 – Basic Mechanical Requirements

B. Section 15090 – Piping Insulation

C. Section 15097 – Ductwork Insulation

D. Section 15210 – Reciprocating Air Compressors

E. Section 15400 – Plumbing Piping and Associated Materials

F. Section 15540 – Fuel Fired Heaters

G. Section 15767 – Heat Pump Air Conditioning Systems

H. Section 15810 – Ductwork

I. Section 15820 – Ductwork Accessories

J. Section 15830 – Fans

K. Section 15850 – Air Outlets and Inlet

L. Section 15950 – Testing, Adjusting and Balancing

1.3 REFERENCES:

A. ASME B31.2 – Fuel Gas Piping

B. ASME B31.9 – Building Services Piping

C. ASTM F708 – Design and Installation of Rigid Pipe Hangers.

D. MSS SP58 – Pipe Hangers and Supports - Materials, Design and Manufacturer.

E. MSS SP69 – Pipe Hangers and Supports - Selection and Application.

F. MSS SP89 – Pipe Hangers and Supports - Fabrication and Installation Practices.

G. NFPA 13 – Installation of Sprinkler Systems.

H. SMACNA – HVAC Duct Construction Standards, latest edition

I. UL 203 – Pipe Hanger Equipment for Fire Protection Service

J. UPC – Uniform Plumbing Code, latest edition.

K. UMC – Uniform Mechanical Code, latest edition.

1.4 SUBMITTALS:

A. Submit under provisions of Uniform General Conditions and Special Conditions, and Section 15050.

B. Product Data: Provide manufacturers catalog data including load capacity.

C. Manufacturer's Installation Instructions: Indicate special procedures and assembly of components.

1.5 REGULATORY REQUIREMENTS:

A. Conform to applicable code or standard for support of all systems.

PART 2 - PRODUCTS

2.1 PIPE HANGERS AND SUPPORTS:

A. Manufacturers:
   1. Grinnell.
   2. Approved equal.

B. Supports, hangers, anchors and guides shall be provided for all horizontal and vertical piping.

C. All auxiliary steel required for pipe supports, anchors, guides, etc. shall be provided by the Mechanical Trades unless specifically indicated to be provided by others.

D. Contractor shall review all Drawings, including Structural Drawings, for details regarding pipe supports, anchors, hangers, and guides.

E. All pipe supports shall be of type and arrangement to prevent excessive deflection, to avoid excessive bending stresses between supports, and to eliminate transmission of vibration.

F. All rod sizes indicated in this Specification are minimum sizes only. This trade shall be responsible for structural integrity of all supports, anchors, guides, etc. All structural hanging materials shall have a minimum safety factor of 5 built in.

G. All floor supports of piping and equipment shall be structural steel, pipe, tubing, Unistrut, or similar materials. Threaded rod shall not be used to support piping or equipment from the floor.

H. Anchor points as indicated on Drawings or as required shall be located and constructed to permit the piping system to take up its expansion and contraction freely in opposite directions away from the anchored points.

I. Pipe supports, hangers, anchors, and guides shall be fastened to the structure only at such points where the structure is capable of restraining the forces in the piping system.

J. Hangers supporting and contacting brass or copper lines 3" in size and smaller shall be Grinnell Fig. CT-99c, adjustable, copper plated, tubing ring. Hangers supporting and contacting brass or copper lines 4" and larger shall be Grinnell Fig. 260, adjustable clevis, with a nut above and below the hanger, and approved neoprene isolating material between pipe (or tubing) and hanger on the support rod. For insulated copper or brass domestic water lines, hangers for all

sizes of pipe shall be Grinnell Fig. 300, adjustable clevis, with a nut above and below the hanger, and approved neoprene isolating material between pipe (or tubing) and hanger on the support rod. Isolate all copper or brass lines from all ferrous materials with approved dielectric materials. Hangers supporting and contacting plastic piping shall be of equal design, but shall be padded with neoprene material or equal. The padding material and the configuration of its installation shall be submitted for approval.

K. Hangers supporting insulated lines where the outside diameter of the insulation is the equivalent of 8" diameter pipe or smaller in size and supporting all ferrous lines 6" and smaller in size shall be Grinnell Fig. 260, adjustable clevis, with a nut above and below the hanger on the support rod.

L. Hangers supporting and contacting ferrous lines larger than 6" in size and outside of insulation on lines with the outside diameter equivalent to 10" diameter pipe shall be Grinnell Fig. 260, adjustable clevis, with a nut above and below the hanger on the support rod.

M. Each hanger shall be properly sized to fit the supported pipe or fit the outside of the insulation on lines where specified. Hangers for dual or low temperature insulation pipes shall bear on the outside of the insulation, which shall be protected by support shields as specified in Section 15090 - PIPING INSULATION. Protect insulation from crushing by means of a section of rigid insulation to be installed at hanger points. Hangers for high temperature insulated pipes and all insulated hot and cold domestic water pipes shall be encased in the insulation unless supported by trapezes in which case shield and rigid insulation shall be provided as specified above for low temperature insulated pipes.

N. Supports for vertical piping in concealed areas shall be double bolt riser clamps, Grinnell Fig. 261, or other approved equal, with each end having equal bearing on the building structure, and located at each floor. Two-hole rigid pipe clamps at 4 ft. on center or Kindorf channels and Grinnell Fig. 261 riser clamps may be used to support pipe from vertical surfaces or members where lines are not subject to expansion and contraction. Where brass or copper lines are supported on trapeze hangers or Kindorf channels the pipes shall be isolated from these supports with plastic tape with insulating qualities, or strut clamps as manufactured by Specialty Products Company, Stanton, California.

O. Pipe Supports in Chases and Partitions, or as detailed in the drawings: Horizontal and vertical piping chases and partitions shall be supported by hangers or other suitable support. Pipes serving plumbing fixtures and equipment shall be securely supported near the point where pipes penetrate the finish wall. Supports shall be steel plate, angles or special channels such as Unistrut mounted in vertical or horizontal position. Pipe clamps such as Unistrut P2426, P2008, P1109 or other approved clamps shall be attached to supports. Supports shall be attached to wall or floor construction with clip angles, brackets, or other approved method. Supports may be attached to cast iron pipe with pipe clamp, or other approved method. All copper or brass lines shall be isolated from ferrous metals with dielectric materials to prevent electrolytic corrosion.

P. Perforated strap iron ("plumbers tape") or wire will not, under any circumstances, be acceptable as hanger material.

Q. Attachment:

1. The load and spacing on each hanger and/or insert shall not exceed the safe allowable load for any component of the support system, including the concrete which holds the

attachments. Reinforcement at inserts shall be provided as required to develop the strength required.

2. Inserts for piping shall be of a type which will not interfere with reinforcing as shown on the structural Drawings and which will not displace excessive amounts of structural concrete.

3. All pipe supports shall be designed and installed to avoid interference with other piping, hangers, ducts, electrical conduit, supports, building structures, equipment, etc. All piping shall be installed with due regard to expansion and contraction and the type of hanger method of support, location of support, etc. shall be governed in part by this Specification.

4. Pipe hangers shall be attached to the structure as follows:

   a) Steel Beams: Where pipes and loads are supported under steel beams, approved type beam clamps shall be used.

   b) Steel Trusses: Where pipes and loads are supported from steel trusses, hanger rods shall be attached to bottom chord with brackets or angle clips.

R. Trapezes: Where multiple lines are run horizontally at the same elevation and grade, they may be supported on trapezes of Kindorf, Elcen, or approved equal, channel-suspended on rods or pipes. Trapeze members including suspension rods shall each be properly sized for the number, size, and loaded weight of the lines they are to support.

S. Finishes: All hangers on piping including clevis hangers, rods, inserts, clamps, stanchions, and brackets, shall be dipped in Zinc Chromate Primer before installation. Rods shall be galvanized or cadmium plated after threading, in lieu of dipping zinc chromate. Universal concrete inserts shall be cadmium plated.

T. Provide any special foundations, hangers and supports indicated on the Drawings, specified elsewhere herein; or required by conditions at the site. Hangers and supporting structures for suspended equipment shall be provided as required to support the load from the building structure in a manner acceptable to the Engineer.

2.2 ACCESSORIES:

A. Hanger Rods: Galvanized mild steel threaded both ends, galvanized threaded one end, or galvanized continuous threaded.

B. Sleeves: Provide sleeves for all piping and duct penetrations of walls and floor. Galvanized schedule 40 pipe for all pipe and conduit except uninsulated copper pipe. Use copper pipe as sleeves for uninsulated copper pipe.

2.3 INSERTS:

A. Inserts: Malleable iron case of galvanized steel shell and expander plug for threaded connection with lateral adjustment, top slot for reinforcing rods, lugs for attaching to forms; size inserts to suit threaded hanger rods.

2.4 FLASHING:

A. Metal Flashing: 26 gage galvanized steel.

B. Metal Counterflashing: 22 gage galvanized steel.

C. Roofing Flashing: See specifications for Roofing, elsewhere in these Specifications.

D. Caps: Steel, 22 gage minimum; 16 gage at fire resistant elements.

2.5 EQUIPMENT ROOF CURBS:

A. Fabrication: Welded 18 gage galvanized steel shell and base, mitered 3 inch cant, variable step to match roof insulation, factory installed wood nailer. As manufactured by Thycurb, or approved equal.

PART 3 - EXECUTION

3.1 INSTALLATION:

A. Install all materials in accordance with manufacturer's instructions.

3.2 INSERTS:

A. Provide inserts for placement in concrete formwork.

B. Where inserts are omitted, drill through concrete slab from below and provide through-bolt with recessed square steel plate and nut recessed into and grouted flush with slab.

3.3 PIPE HANGERS AND SUPPORTS:

A. Support horizontal piping as scheduled.

B. Install hangers to provide minimum 1/2 inch space between finished covering and adjacent work.

C. Place hangers within 12 inches of each horizontal elbow.

D. Use hangers with 1-1/2 inch minimum vertical adjustment.

E. Support horizontal cast iron pipe adjacent to each hub, with 5 feet maximum spacing between hangers.

F. Support vertical piping at every floor. Support vertical piping at each floor at hub.

G. Where several pipes can be installed in parallel and at same elevation, provide multiple or trapeze hangers.

H. Support riser piping independently of connected horizontal piping.

I. Provide copper plated hangers and supports for copper piping.

J. Design hangers for pipe movement without disengagement of supported pipe.

K. Prime coat exposed steel hangers and supports. Hangers and supports located in crawl spaces, pipe shafts, and suspended ceiling spaces are not considered exposed, but shall be corrosion protected with galvanized plating.

L. Hanger Rods: (NOTE: All hanger rods shall be trimmed neatly so that no more than 1 inch of excess hanger rod protrudes beyond the hanger nut. In the event a rod is intentionally but temporarily left excessively long, for sloped or insulated lines for example, the contractor shall take appropriate measures to protect the pipe or other materials from damage.)

M. Provide and install sufficient support and lateral bracing to restrain all equipment and piping systems from lateral movement during operation of supported equipment and system(s).

3.4 FLASHING:

A. Provide flexible flashing and metal counterflashing where piping and ductwork penetrate weather or weatherproofed walls, floors, and roofs.

B. Flash vent and soil pipes projecting 3 inches minimum above finished roof surface with lead worked one inch minimum into hub, 8 inches minimum clear on sides with 24 x 24 inches sheet size. For pipes through outside walls, turn flanges back into wall and caulk, metal counterflash, and seal.

C. Flash floor drains in floors with topping over finished areas with lead, minimum 10 inches clear on sides with minimum 48-inch diameter sheet size. Fasten flashing to floor drain clamp device.

D. Seal floor watertight to adjacent materials.

E. Adjust storm collars tight to pipe with bolts; caulk around top edge. Use storm collars above roof jacks. Screw vertical flange section to face of curb.

3.5 SLEEVES:

A. Set sleeves in position in formwork. Provide reinforcing around sleeves.

B. Size sleeves large enough to allow for movement due to expansion and contraction. Provide for continuous insulation wrapping.

C. Extend sleeves through floor four inches above finished floor level. Caulk sleeves.

D. Sleeves through walls below grade shall be sized to accept a Link-Seal or similar type sealing system.

E. Where piping, ductwork or conduit penetrates floor, ceiling, or wall, close space between pipe or duct and adjacent work with fire stopping insulation and caulk air tight. Provide close fitting metal collar or escutcheon covers, as appropriate, at both sides of penetration.

F. Install chrome plated steel or stainless steel escutcheons at finished surfaces.

3.6 HANGER SPACING SCHEDULE

PIPE SIZE (inches)	MAX. HANGER SPACING (feet)	HANGER ROD (inches)
1/2 to 1-1/4	6.5	3/8
1-1/2 to 2	10	3/8
Plastic Pipe (All Sizes)	4	3/8
C.I. Bell and Spigot (or No-Hub)	5	5/8
NOTE: Also support all Cast Iron Bell and Spigot, and No-Hub piping at all joints and fittings. ("Plastic Pipe" refers to PVC, CPVC, PVDF, PP, PPDV, PE, etc.)		

END OF SECTION

SECTION 15090
PIPING INSULATION

PART 1 - GENERAL

1.1 SECTION INCLUDES

A. Piping insulation.

B. Jackets and accessories.

1.2 PRODUCTS FURNISHED BUT NOT INSTALLED UNDER THIS SECTION

A. Section 15400 - Plumbing Piping and Associated Materials: Placement of hangers and hanger inserts

1.3 RELATED SECTIONS

A. Section 15050 - Basic Mechanical Requirements

B. Section 15400 - Plumbing Piping and Associated Materials

1.4 REFERENCES

A. ASTM B209 - Aluminum and Aluminum-Alloy Sheet and Plate

B. ASTM C177 - Steady-State Heat Flux Measurements and Thermal Transmission Properties by Means of the Guarded-Hot-Plate Apparatus

C. ASTM C195 - Mineral Fiber Thermal Insulation Cement

D. ASTM C335 - Steady-State Heat Transfer Properties of Horizontal Pipe Insulation

E. ASTM C449 - Mineral Fiber Hydraulic-setting Thermal

F. ASTM C518 - Steady-State Heat Flux Measurements and Thermal Transmission Properties by Means of the Heat Flow Meter Apparatus

G. ASTM C533 - Calcium Silicate Block and Pipe Thermal Insulation

H. ASTM C534 - Preformed Flexible Elastomeric Cellular Thermal Insulation in Sheet and Tubular Form

I. ASTM C547 - Mineral Fiber Preformed Pipe Insulation

J. ASTM C585 - Inner and Outer Diameters of Rigid Thermal Insulation for Nominal Sizes of Pipe and Tubing (NPS System)

K. ASTM C591 - Rigid Preformed Cellular Urethane Thermal Insulation

L. ASTM C610 - Expanded Perlite Block and Pipe Thermal Insulation

M. ASTM C921 - Properties of Jacketing Materials for Thermal Insulation

N. ASTM D1056 - Flexible Cellular Materials - Sponge or Expanded Rubber

O. ASTM D1667 - Flexible Cellular Materials - Vinyl Chloride Polymers and Copolymers (Closed Cell Foam)

P. ASTM D2842 - Water Absorption of Rigid Cellular Plastics

Q. ASTM E84 - Surface Burning Characteristics of Building Materials

R. ASTM E96 - Water Vapor Transmission of Materials

S. NFPA 255 - Surface Burning Characteristics of Building Materials

T. UL 723 - Surface Burning Characteristics of Building Materials

1.5 SUBMITTALS

A. Submit under provisions of Uniform General Conditions and Special Conditions, and Section 15050.

B. Product Data: Provide product description, list of materials and thickness for each service, and locations.

C. Manufacturer's Installation Instructions: Indicate procedures which ensure acceptable workmanship and installation standards will be achieved.

1.6 QUALITY ASSURANCE

A. Materials: Flame spread / smoke developed rating of 25/50 or less in accordance with NFPA 255.

1.7 QUALIFICATIONS

A. Applicator: Company specializing in performing the work of this section with minimum three years experience.

1.8 DELIVERY, STORAGE, AND HANDLING

A. Deliver, store, protect, and handle products to site under provisions of Uniform General Conditions, Special Conditions and Section 15050.

B. Deliver materials to site in original factory packaging, labeled with manufacturer's identification, including product density and thickness.

C. Store insulation in original wrapping and protect from weather and construction traffic.

D. Protect insulation against dirt, water, chemical, and mechanical damage.

1.9 ENVIRONMENTAL REQUIREMENTS

A. Maintain ambient temperatures and conditions required by manufacturers of adhesives, mastics, and insulation cements.

B. Maintain temperature during and after installation for minimum period of 24 hours.

PART 2 - PRODUCTS

2.1 HOT AND COLD DOMESTIC WATER:

A. All domestic (potable) hot and cold water lines in buildings, including valves, strainers, unions,

flanges, etc., except where specifically noted to the contrary, shall be insulated.

B. Potable water piping shall be insulated with 3 ½ pound density preformed fiberglass insulation with a factory applied All Service Jacket, vapor sealing all joints, and factory performed fittings with vapor seal. Where pipe chases are tight, adequate provision shall be made at the rough in stage utilizing offset fittings or other means (except springing the pipe) to insure that insulation can be applied throughout the length of the pipe.

C. Valves shall be insulated with mitered pipe covering with voids filled with glass fiber blanket insulation. Valves and fittings shall be vapor sealed with a water base asphaltic emulsion. Fittings on concealed insulation shall be built up to the thickness of adjacent insulation with glass fiber fitting wrap and shall be finished with Glasfab tape embedded in vapor barrier emulsion. Exposed fitting insulation shall be built up to same thickness as adjoining pipe insulation with one coat cement and after drying shall be finished with a white vapor seal and canvas jacket secured with "Arabol" adhesive and be suitable for painting.

D. All insulated piping in outdoors locations shall be covered with smooth finished aluminum jacketing with ASJ and preformed fitting covers. Secure in place with 3/4" aluminum bands and seals, 3 per 3 foot section of jacketing. Jacketing to overlap 3"

E. Seams in jacket shall be placed in the least noticeable locations. Where seams, joint or fittings are rough they shall be covered with an application of insulating cement trowelled on smoothly before the canvas is applied with Arabol adhesive. The canvas must be free of wrinkles and have a smooth, neat appearance.

F. The hot and cold water piping and drain piping under all lavatories shall be insulated. Insulation shall be Truebro "Handi Lav-guard" insulation kit, Model #102W with accessory #105W for offset tailpiece, if applicable, conforming to ADA article 4.19.4, ANSI A117.1, BOCA article P-1203.4, and State of Texas standards for accessibility. Insulation shall be as specified or approved equal. Note that additional insulating material may be required for insulation of additional piping due to the undersink installation of instantaneous water heaters. All undersink piping shall be insulated without exception.

2.2 CONDENSATE DRAIN PIPING:

A. Condensate drain piping from fan and coil units, coil banks, drinking fountain refrigeration units, drinking fountain drain piping, and other items of piping or equipment subject to condensation forming on the surface shall be insulated with "25-50" rated, closed cell elastomeric thermal insulation. Elastomeric products shall be supplied in a preslit tubular form with a pressure sensitive adhesive system for closure and vapor sealing of the longitudinal joint. All elastomeric insulating products shall be guaranteed not to react with copper piping.

PART 3 - EXECUTION

3.1 EXAMINATION

A. Verify that piping has been tested before applying insulation materials.

B. Verify that surfaces are clean, foreign material removed, and dry.

3.2 INSTALLATION

A. Install materials in accordance with manufacturer's instructions.

B. On exposed piping, locate jacket cover seams in least visible locations, but not higher than at the side of the pipe at the "90°" position, with the seam lapped such that the lap is directed down.

C. Insulated dual temperature pipes or cold pipes conveying fluids below ambient temperature:
   1. Provide vapor barrier jackets, factory applied or field applied.
   2. Insulate fittings, joints, and valves with molded insulation of like material and thickness as adjacent pipe.
   3. Finish with glass cloth and vapor barrier adhesive.
   4. PVC fitting covers may be used at the contractor's option.
   5. Continue insulation through walls, sleeves, pipe hangers, and other pipe penetrations.
   6. Insulate entire system including fittings, valves, unions, flanges, strainers, flexible connections, pump bodies, and expansion joints.

D. For insulated pipes conveying fluids above ambient temperature:
   1. Provide standard jackets, with or without vapor barrier, factory applied or field applied.
   2. Insulate fittings, joints, and valves with insulation of like material and thickness as adjoining pipe.
   3. Finish with glass cloth and adhesive.
   4. PVC fitting covers may be used at the contractor's option.
   5. For hot piping conveying fluids 140 degrees F or less, do not insulate flanges and unions at equipment, but bevel and seal ends of insulation.
   6. For hot piping conveying fluids over 140 degrees F, insulate flanges and unions, including those at equipment, but label the insulation to indicate a concealed flange or union.

E. Inserts and Shields:
   1. Application: Install shields between all hanger and piping insulation contact points. Install inserts on piping 2 inches diameter or larger.
   2. Shields: Galvanized steel between pipe hangers or pipe hanger rolls and inserts.
   3. Insert Location: Between support shield and piping and under the finish jacket.
   4. Insert Configuration: Minimum 6 inches long, of same thickness and contour as adjoining insulation; may be factory fabricated.
   5. Insert Material: Heavy density insulating material suitable for the planned temperature range, and the weight of the pipe.

F. Finish insulation at supports, protrusions, and interruptions.

G. All piping, equipment, ductwork, all plenums including metal and masonry construction, fans, etc., shall be insulated as indicated on the Drawings, as specified herein, and as required for a complete system. In each case, the insulation shall be equal to that specified and materials applied and finished as described in these Specifications.

H. All insulation shall be applied by mechanics skilled in this particular work and regularly engaged in such occupation. All insulation shall be applied in strict accordance with these Specifications and with factory printed recommendations on items not herein mentioned. Unsightly, inadequate, or sloppy work will not be acceptable, and all such work shall be removed and replaced as many times as necessary to achieve an acceptable installation.

I. All insulation, jacket, adhesives, mastics, sealers, etc., utilized in the fabrication of these systems shall meet NFPA 255 for fire resistant ratings (maximum of 25 flame spread and 50 smoke

developed ratings) and shall be approved by the insulation manufacturer for guaranteed performances when incorporated into their insulation system, unless a specific product is specified for a specific application, and is stated as an exception to this requirement. Certificates to this effect shall be submitted along with Contractor's submittal data for this section of the Specifications. No material may be used that, when tested by the ASTM E84-89 test method, is found to melt, drip or delaminate to such a degree that the continuity of the flame front is destroyed, thereby resulting in an artificially low flame spread rating, except where noted otherwise. A statement by the manufacturer in the submittal literature that the material meets the requirements of NFPA 255 or UL 623 shall be deemed acceptable to meet the requirements of this specification.

J. All surfaces to be insulated shall be clean and dry before applying the insulation. All sections of molded pipe covering shall be firmly butted together. Where insulation terminates, it shall be neatly beveled and finished. No insulation shall be applied until the pipe, duct, etc., has been pressure tested and found tight. Piping, flexible connections, flanges, valves, strainers, and unions shall be covered unless specifically noted otherwise. Flexible connections on duct, if used, shall not be covered. All materials used shall be fire retardant or nonflammable. Refer to Section 15050.

K. Where vapor barriers are required, the vapor barrier shall be on the outside. Extreme care shall be taken that the vapor barrier is unbroken. Joints, etc., shall be sealed. Where insulation with a vapor barrier terminates, it shall be sealed off with the vapor barrier being continuous to the surface being insulated. Ends shall not be left raw.

L. Where canvas finish is specified, use Arabol lagging adhesive to prevent mildew in securing canvas. Do not use wheat paste. In addition, cover all canvas insulation with a fire retardant coating.

M. The handling and installation of all insulation materials shall be performed in strict accordance with the manufacturer's recommendations.

3.3 INSULATION SCHEDULE:

Piping Type	Minimum Insulation Thickness
Hot and Cold Domestic Water	1"
Under Sink Domestic Water and Drain	(material as specified)
Condensate Drain Piping	½"

END OF SECTION

SECTION 15097
DUCTWORK INSULATION

PART 1 - GENERAL

1.1 SECTION INCLUDES

A. Ductwork insulation.

B. Insulation jackets.

1.2 RELATED SECTIONS

A. Section 15050 – General Mechanical Requirements.

B. Section 15075 – Mechanical Identification.

C. Section 15810 – Ductwork.

D. Section 15820 – Ductwork Accessories.

1.3 REFERENCES

A. TM B209 – Aluminum and Aluminum-Alloy Sheet and Plate.

B. ASTM C518 – Steady-State Heat Flux Measurements and Thermal Transmission Properties by Means of the Heat Flow Meter Apparatus.

C. ASTM C553 – Mineral Fiber Blanket and Felt Insulation.

D. ASTM C612 – Mineral Fiber Block and Board Thermal Insulation.

E. ASTM E84 – Surface Burning Characteristics of Building Materials.

F. ASTM E96 – Water Vapor Transmission of Materials.

G. NFPA 255 – Surface Burning Characteristics of Building Materials.

H. SMACNA – HVAC Duct Construction Standards - Metal and Flexible.

I. UL 723 – Surface Burning Characteristics of Building Materials.

1.4 SUBMITTALS

A. Submit under provisions of Uniform General Conditions and Special Conditions.

B. Product Data: Provide product description, list of materials and thickness for each service, and locations.

C. Manufacturer's Installation Instructions: Indicate procedures which ensure acceptable workmanship and installation standards will be achieved.

1.5 QUALITY ASSURANCE

A. Materials: Flame spread/smoke developed rating of 25/50 in accordance with NFPA 255.

1.6 QUALIFICATIONS

A. Applicator: Company specializing in performing the work of this section with minimum three years experience.

1.7 DELIVERY, STORAGE, AND HANDLING

A. Deliver, store, protect and handle products to site under provisions of Uniform General Conditions, Special Conditions and Section 15050.

B. Deliver materials to site in original factory packaging, labeled with manufacturer's density and thickness.

C. Store insulation in original wrapping and protect from weather and construction traffic.

D. Protect insulation against dirt, water, chemical, and mechanical damage.

1.8 ENVIRONMENTAL REQUIREMENTS

A. Maintain ambient temperatures and conditions required by manufacturers of adhesives, mastics, and insulation cements.

B. Maintain temperature during and after installation for minimum period of 24 hours.

PART 2 - PRODUCTS

2.1 INSULATION

A. TYPE A - Rigid Board Insulation

1. Three pound per cubic foot minimum density glass fiber semi-rigid board insulation with fiber perpendicular to the surface and with factory applied white foil reinforced vapor barrier jacket (ASJ). Insulation shall be equal to E.O. Woods Company "Rigid-Wrap".

2. The insulation shall be secured to the ducts with mechanical fasteners; "Stick-clips", Graham Pins or Speed Clips, and shall be spaced approximately 12" on center on bottom of duct and where required elsewhere to hold insulation securely against the duct as noted in the published recommendations of the Insulation Manufacturer.

3. After insulation is in place, all joints and seams shall be sealed with Foster 30-35 white vapor barrier emulsion applied over a 3" wide strip of Duramesh Glass Fabric. All protrusions through the vapor barrier shall be thoroughly sealed.

4. On ducts that are reinforced with standing seams or angle iron stiffeners 1" and over in height, the Contractor shall apply a strip of fiberglass board 1" thick by 6" wide, sealing same to the other insulation with mastic.

5. Vapor sealing of joints and seams is not required on hot duct application where concealed.

B. TYPE B - External Wrap Blanket Insulation

1. Blanket insulation with a thermal conductivity (K) of 0.27 or less similar in construction to Owens-Corning Fiberglass Series one and a half pound per cubic foot minimum density with foil reinforced Kraft (FRK) vapor barrier facing. Insulation shall be wrapped tightly on the ductwork with all circumferential joints butted and longitudinal joints overlapped a minimum of 2". Adhere insulation to metal with 4" strips of insulation bonding adhesive at 8" on center. On circumferential and longitudinal joints, the 2" flange of the facing shall be secured using 9/16" flare door staples applied 6" on center and taped with 4" wide fiberglass tape embedded in Foster 30-35 white vapor barrier Emulsion and covered with Foster 30-35 white vapor barrier Emulsion until the tape is completely covered. All pin penetrations or punctures in facing shall also be taped. Vapor sealing of joints is not required on hot duct application where concealed.

C. Top of ceiling diffuser shall be insulated with 1" Insulation B.

D. Flexible round ducts are specified in Section 15810 as factory insulated.

PART 3 - EXECUTION

3.1 **DUCT DIMENSIONS INDICATED IN THE DRAWINGS ARE NET INSIDE DIMENSIONS REQUIRED FOR AIR FLOW. DUCT CONSTRUCTION SHALL INCREASE DUCT SIZE TO ALLOW FOR INSULATION THICKNESS IF NECESSARY TO MAINTAIN INDICATED FREE AREA.**

3.2 EXAMINATION

A. Ductwork shall be tested as specified before applying insulation materials.

B. Verify that ductwork has been tested before applying insulation materials.

C. Verify that surfaces are clean, foreign material removed, and dry.

3.3 INSTALLATION

A. Install materials in accordance with manufacturer's instructions.

B. Insulated ductwork conveying air below ambient temperature:

1. Provide insulation with vapor barrier jackets.

2. Finish with tape and vapor barrier jacket, sealed air tight.

3. Continue insulation through walls, sleeves, hangers, and other duct penetrations.

4. Insulate entire system including fittings, joints, flanges, the backs of diffusers, flexible connections, and expansion joints.

C. Insulated ductwork conveying air above ambient temperature:

1. Provide with or without standard vapor barrier jacket.

2. Insulate fittings and joints. Where service access is required, bevel and seal ends of insulation.

D. External Duct Insulation Application:

1. Secure rigid (not blanket) insulation with vapor barrier with wires and seal jacket joints with vapor barrier adhesive or tape to match jacket.

2. Secure insulation without vapor barrier with staples, tape, or wires.

3. Install without sag on underside of ductwork. Use adhesive or mechanical fasteners where necessary to prevent sagging. Lift ductwork off trapeze hangers and insert spacers.

4. Seal vapor barrier penetrations by mechanical fasteners with vapor barrier adhesive.

5. Stop and point insulation around access doors and damper operators to allow operation without disturbing wrapping.

E. Duct and Plenum Liner Application:

1. Adhere insulation with adhesive for 100 percent coverage.

2. Secure insulation with mechanical liner fasteners. Refer to SMACNA Standards for spacing.

3. Seal and smooth joints.

4. Seal liner surface penetrations with adhesive.

F. All piping, equipment, ductwork, all plenums including metal and masonry construction, fans, etc., shall be insulated as indicated on the Drawings, as specified herein, and as required for a complete system. In each case, the insulation shall be equal to that specified and materials applied and finished as described in these Specifications.

G. All insulation shall be applied by mechanics skilled in this particular work and regularly engaged in such occupation. All insulation shall be applied in strict accordance with these Specifications and with factory printed recommendations on items not herein mentioned. Unsightly, inadequate, or sloppy work will not be acceptable, and all such work shall be removed and replaced to achieve an acceptable installation.

H. All insulation, jacket, adhesives, mastics, sealers, etc., utilized in the fabrication of these systems shall meet NFPA for fire resistant ratings (maximum of 25 flame spread and 50 smoke developed ratings) and shall be approved by the insulation manufacturer for guaranteed performances when incorporated into their insulation system, unless a specific product is specified for a specific application, and is stated as an exception to this requirement. Certificates to this effect shall be submitted along with Contractor's submittal data for this section of the Specifications.

I. All surfaces to be insulated shall be clean and dry before applying the insulation. All sections of molded pipe covering shall be firmly butted together. Where an insulation covering is applied, it shall lap the adjoining section of insulation by at least three inches (3"). Where insulation terminates, it shall be neatly beveled and finished. No insulation shall be applied until the pipe,

duct, etc., have been pressure tested and found tight. Piping, flexible connections, flanges, valves, strainers, and unions shall be covered unless specifically noted otherwise. Flexible connections on duct shall not be covered.

J. Where vapor barriers are required, the vapor barrier shall be on the outside. Extreme care shall be taken that the vapor barrier is unbroken. Joints, etc., shall all be sealed. Where insulation with a vapor barrier terminates, it shall be sealed off with the vapor barrier being continuous to the surface being insulated. Ends shall not be left raw.

K. Extreme care shall be taken in covering ductwork to insure the duct is not pierced with sheet metal screws or other fasteners.

L. Where canvas finish is specified, use Arabol lagging adhesive to prevent mildew in securing canvas. Do not use wheat paste. In addition, cover all canvas insulation with a fire retardant coating.

M. The handling and installation of all insulation materials shall be performed in strict accordance with the manufacturers recommendations.

3.4 TOLERANCE

A. Substituted insulation materials shall provide thermal resistance at least the amount specified, or within 10 percent at normal conditions, as materials indicated.

3.5 DUCT INSULATION SCHEDULE:

A. See drawings for insulation type, location and thickness shall be as indicated on the drawings.

END OF SECTION

SECTION 15210
RECIPROCATING AIR COMPRESSORS

PART 1 - GENERAL

1.1 WORK INCLUDED

A. Reciprocating air compressor.

B. Air receiver and accessories.

C. Pressure Reducing Valves

D. Water Air separators.

1.2 RELATED WORK

A. Section 15050 - Basic Mechanical Requirements.

B. Section 15060 - Anchors and Supports.

C. Section 15400 - Plumbing Piping and Associated Materials.

1.3 REFERENCES

A. Air receivers shall meet requirements of ASME Code for Unfired Pressure Vessels and carry ASME approval stamp.

1.4 SUBMITTALS

A. Submit Manufacturer’s drawing and data sheets for each component.

B. Submit inspector's certificate for air receiver for inclusion in Operating and Maintenance Manuals.

PART 2 - PRODUCTS

2.1 ACCEPTABLE MANUFACTURERS

A. Ingersoll-Rand

B. SpeedAire

C. Substitutions: Under provisions of Uniform General Conditions and Special Conditions, and Section 15050.

2.2 TYPE

A. Provide a total packaged configuration which shall include a starter, automatic drain valve, low oil level switch, an air cooled compressor mounted on a vertical receiver tank, and all the necessary controls. Refer to equipment schedule on drawings for additional requirements.

2.3 COMPRESSOR CONSTRUCTION

A. Construct compressor unit with cast iron housing and head, heat treated forged steel or ductile iron shaft, aluminum alloy connecting rods, aluminum pistons with non-lubricated carbon rings, high-strength alloy suction and discharge valves. Statically and dynamically balance rotating parts.

B. Mount motor and compressor on one piece ribbed cast iron or welded steel base with provision for V-belt adjustment.

2.4 AIR RECEIVER

A. Provide vertical receiver tank built to ASME regulations for working pressure of 175 psi. Flange or screw inlet and outlet connections.

B. Fittings shall include adjustable pressure regulator, safety valve, pressure gage, drain cock, and automatic condensate trap.

C. Tank Finish: Hot-dipped galvanized, baked enamel, or powder coat.

2.5 PRESSURE REDUCING VALVE

A. Provide pressure reducing station(s) complete with automatic reducing valve and bypass, and low pressure side relief valve and gage.

B. Valve capacity suitable to reduce pressure from 200 psi to 30 psi to be adjustable upwards from reduced pressure.

2.6 CONTROLS

A. Pressure switch to cut out at 100 psi with minimum differential of 20 psi.

B. Dual Compressor regulation shall be through lead-lag switch with time delay relay.

PART 3 - EXECUTION

3.1 INSTALLATION (Non-portable units)

A. Install compressor unit on concrete foundation with sole plates and isolators. Level and bolt in place.

B. Make air cock and drain connection on horizontal casing.

C. Install line size gate valve and anti-return valve on compressor discharge.

D. Install replaceable cartridge type filter silencer of adequate capacity for each compressor.

E. Place shut-off valve on water inlet to aftercooler. Pipe drain to floor drain.

F. Connect condensate drains to nearest floor drain.

G. Install valved drip connections at low points of piping system.

H. Install take-offs to outlets from top of main, with shut-off valve after take-off.

I. Install compressed air couplings, 3/8 inch female speed couplers, and pressure gages where outlets are indicated.

J. Install "T" pieces instead of elbows at changes in direction of piping. Fit open end of each "T" with plug.

3.2 INSTALLATION (Portable units)

A. Install compressed air couplings, 3/8 inch female speed couplers, and pressure gages where outlets are indicated.

B. Install "T" pieces instead of elbows at changes in direction of piping. Fit open end of each "T" with plug.

3.3 PERFORMANCE

A. Compressors shall operate at scheduled air volume and pressure without oil creep, overloading, and within 10 percent of peak efficiency. Refer to drawings for equipment schedule.

END OF SECTION

SECTION 15400
PLUMBING, PIPING AND ASSOCIATED MATERIALS

PART 1 - GENERAL

1.1 SECTION INCLUDES

A. Pipe and pipe fittings

B. Valves

C. Valve Boxes

D. Unions

E. Dissimilar Metal Connections

F. Sanitary waste and vent system

G. Domestic water supply and distribution system

H. Water hammer arrestors

I. Water closets

J. Urinals

K. Lavatories

L. Sinks

M. Faucets

N. Hose bibbs

O. Electric Water Coolers

P. Electric water heater

Q. Liquid propane gas supply and distribution system

R. Compressed air system

1.2 RELATED SECTIONS

A. Section 15050 – Basic Mechanical Requirements.

B. Section 15060 – Supports and Anchors.

C. Section 15090 – Piping Insulation.

D. Section 15210 – Reciprocating Air Compressors

E. Division 16 – Electrical.

1.3 REFERENCES

A. AGA – American Gas Association

B. ANSI B31.2 – Fuel Gas Piping

C. ANSI B31.4 – Liquid Petroleum Transportation Piping Systems

D. ANSI/ASHRAE 90.1 – Energy Conservation in New Building Design.

E. ANSI/NFPA 70 – National Electrical Code.

F. ANSI/UL 174 – Household Electric Storage Tank Water Heaters.

G. ANSI/NEMA 250 – Enclosure for Electrical Equipment (1000 Volts Maximum)

H. ANSI/ASSE 1011 – Hose Connection Vacuum Breakers

I. ANSI/ASME A112.19.1 – Enameled Cast Iron Plumbing Fixtures

J. ANSI/ASME A112.19.2 – Vitreous China Plumbing Fixtures

K. ANSI/ASME A112.19.5 – Trim for Water-Closet Bowls, Tanks, and Urinals (Dimensional Standards)

L. ANSI A112.26.1 – Water Hammer Arrestors

M. ANSI B31.9 – Building Service Piping

N. ASME A112.18.1 – Finished and Rough Brass Plumbing Fixture Fittings.

O. ASME B16.18 – Cast Bronze Solder-Joint Pressure fittings.

P. ASME B16.22 – Wrought Copper and Bronze Solder-Joint Pressure Fittings

Q. ASME B16.26 – Cast Bronze Fittings for Flared Copper Tubes.

R. ASME B16.3 – Malleable Iron Threaded Fittings.

S. ASTM A47 – Ferritic Malleable Iron Castings.

T. ASTM A53 – Pipe, Steel, Black and Hot-Dipped Zinc Coated, Welded and Seamless.

U. ASTM A74 – No-hub Cast Iron Soil Pipe and Fittings.

V. ASTM A888 – Bell and Spigot Service Weight Cast Iron Soil Pipe and Fittings.

W. ASTM B32 – Solder Metal.

X. ASTM B42 – Seamless Copper Pipe.

Y. ASTM B43 – Seamless Red Brass Pipe.

Z. ASTM B75 – Seamless Copper Tube.

AA. ASTM B88 – Seamless Copper Water Tube.

BB. ASTM B251 – Wrought Seamless Copper and Copper-Alloy Tube.

CC. ASTM B302 – Threadless Copper Pipe (TP).

DD. ASTM C564 – Rubber Gaskets for Cast Iron Soil Pipe and Fittings.

EE. ASTM D1784 – "Standard Specification for Rigid Poly (Vinyl Chloride) (PVC) Compounds and Chlorinated Poly (Vinyl Chloride) (CPVC) Compounds."

FF. ASTM D1785 – Poly (Vinyl Chloride) (PVC) Plastic Pipe, Schedules 40, 80, and 120.

GG. ASTM D2466 – Poly (Vinyl Chloride) (PVC) Plastic Pipe Fittings, Schedule 40.

HH. ASTM D2564 – Solvent Cements for Poly (Vinyl Chloride) (PVC) Plastic Pipe and Fittings.

II. ASTM D2729 – Poly (Vinyl Chloride) (PVC) Sewer Pipe and Fittings.

JJ. ASTM D2855 – Making Solvent-Cemented Joints with Poly (Vinyl Chloride) (PVC) Pipe and Fittings.

KK. AWWA C651 – Disinfecting Water Mains.

LL. CISPI 301 – Cast Iron Soil Pipe and Fittings for Hubless Cast Iron Sanitary Systems.

MM. CISPI 310 – Joints for Hubless Cast Iron Sanitary Systems.

NN. NFPA 54 – National Fuel Gas Code.

OO. NFPA 58 – Liquefied Petroleum Gas Code.

PP. NSF – National Sanitation Foundation.

QQ. PDI WH-201 – Water Hammer Arrestors.

RR. TCEQ – Texas Commission for Environmental Quality, Water System Regulations

SS. UPC – Uniform Plumbing Code, latest edition

1.4 SUBMITTALS

A. Submit under provisions of Uniform General Condition and Special Conditions, and Section 15050.

B. Product Data: Provide data on pipe materials, pipe fittings, valves, and accessories. Provide manufacturers catalog information. Indicate valve data and ratings.

1.5 QUALITY ASSURANCE

A. Valves: Manufacturer's name and pressure rating marked on valve body.

B. Piping: Manufacturer's name and piping designations clearly stamped on all piping. Markings shall also include applicable ASTM Standard and NSF Certification.

C. Manufacturer's Installation Instructions: Indicate assembly and support requirements.

D. Perform Work in accordance with State of Texas Department of Health and Texas Commission on Environmental Quality Standards.

E. Ensure products and installation of specified products are in conformance with recommendations and requirements of the following organizations:
   1. National Sanitation Foundation (NSF).
   2. National Electrical Manufacturers' Association (NEMA).
   3. Underwriters Laboratories (UL).

1.6 QUALIFICATIONS

A. Manufacturer: Company specializing in manufacturing the Products specified in this section with minimum three years documented experience.

B. Installer: Company specializing in performing the work of this section with minimum of three years documented experience. All work on all plumbing systems shall be performed by, or under the direct, full-time supervision of, a fully qualified and licensed Master Plumber, holding a current license, issued by the State of Texas.

1.7 REGULATORY REQUIREMENTS

A. Perform Work in accordance with the latest editions of the Uniform Plumbing Code, and TCEQ

and TDH Regulations.

B. Conform to applicable code for installation of backflow prevention devices.

C. Conform to NSF, ANSI/NFPA 54, ANSI/NFPA 58, ANSI/NFPA 70, ANSI/UL 174, and ANSI/UL 1453, as appropriate, requirements for water heaters.

1.8 DELIVERY, STORAGE, AND HANDLING

A. Deliver, store, protect and handle products to site under provisions of Section 15050.

B. Accept valves on site in shipping containers with labeling in place. Inspect for damage.

C. Provide temporary end caps and closures on valves, piping and fittings. Maintain in place until installation.

D. Protect piping systems from entry of foreign materials by completing sections of the work, temporary covers, and isolating parts of completed system.

1.9 ENVIRONMENTAL REQUIREMENTS

A. Do not install or backfill buried piping when bedding is wet or frozen.

PART 2 - PRODUCTS

2.1 MANUFACTURERS, GENERAL

A. Each type of product shall be manufactured by the same company. In other words, all lavatories, water closets and urinals shall be the products of the same manufacturer, and all faucets and hose bibbs (except for freezeproof hose bibbs) shall be the products of the same manufacturer.

2.2 WALL, FLOOR AND CEILING PLATES

A. Except as otherwise noted, provide C.P. (chrome plated) brass wall plates (escutcheons) around all pipes, conduits, etc., passing exposed through walls, floors, or ceilings, in any spaces except underfloor and attic spaces. Plates shall be sized to fit snugly against the outside of the pipe or against the insulation on lines which are insulated and positively secured to such pipe or insulation. All equipment closets are classified as finished areas. Round and rectangular ducts shall have closure plates (NOT chrome plated) made to fit accurately at all penetrations of walls and ceilings.

2.3 DOMESTIC WATER SUPPLY AND DISTRIBUTION SYSTEMS

A. All piping of potable domestic water from the water isolation valve up to and including all piping within the confines of building walls shall be a part of the domestic water piping system. Domestic water piping material and installation shall be as previously described and as specified in the following paragraphs.

B. Unless otherwise shown on the Drawings, all above grade (and slab) domestic water piping shall be fabricated of Type K, hard drawn, copper pipe made of deoxidized copper (99.9%

pure). Type K copper pipe shall conform in every detail to ASTM Standard Specifications for COPPER WATER TUBE, Serial Designation B-88, and it shall be provided in 10 or 20 foot straight lengths.

C. Unless otherwise shown on the Drawings, all below slab domestic water piping shall be fabricated of one continuous length (without joints) of Type K, soft drawn, copper pipe made of deoxidized copper (99.9% pure). Type K copper pipe shall conform in every detail to ASTM Standard Specifications for COPPER WATER TUBE, Serial Designation B-88. Note that if a branch must be made, then it shall be made above the slab. All tubing bends shall be made using a tubing bender designed to bend the size of pipe being bent.

D. Copper pipe may only be joined using non-lead-bearing solder, such as Dunton's 95-5 solder (95 percent tin, and 5 percent antimony) manufactured by W. M. Dunton Company, or approved equal. Silver solder consisting of 95 percent tin and 5 percent silver is the only acceptable material substitution.

E. All fittings for four inch (4") and smaller water lines shall be Streamline Solder Fittings manufactured by Streamline Pipe and Fittings Division, Mueller Brass Company, or approved equal. These wrought copper fittings shall be rigid and strong with openings machined to an accurate capillary fit for the copper pipe.

F. The hot and/or cold water supply lines to each and every fixture hereinafter specified shall be equipped with stop valves which shall be chromium plated, cartridge type.

G. All exposed piping and tubing (exceeding 1/4 inch) inside the building shall be chrome plated.

H. Care shall be exercised in fabricating plumbing lines to avoid all cross connections and to construct the piping systems in a manner which eliminates the possibility of water contamination. The piping systems have been designed in every case to avoid the possibility of reverse flow or back siphoning. Care shall be exercised in constructing plumbing lines to make certain that not only the letter, but the spirit, of these safety precautions is carried out to the fullest possible extent.

2.4 VALVES

A. No solder connected or grooved fitting valves shall be used on this project.

B. Ball valves shall be constructed with a three piece bronze body, stainless steel ball and stem, Teflon seats, packing and gasket, bronze gland follower, adjustable stuffing box, steel lever type handle, with plastic operating handle, quarter turn stops, and shall be class 150. Stem extensions shall be furnished for use in insulated lines.

C. Gate valves shall be constructed with a cast iron body, bonnet, wedge gate and handwheel, with a brass alloy stem, cast bronze seat rings, brass packing gland, and non-asbestos packing. All gate valves shall be Class 125, flanged bolted bonnet, and have a solid wedge gate.

D. Standard of Quality for Valves:

			Manufacturer		
Valve Type	Valve Size		Milwaukee	Nibco	Apollo

Valve Type	Valve Size		Manufacturer		
			Milwaukee	Nibco	Apollo
Ball Valve for shutoff and isolation	*4” and smaller	Domestic Hot & Cold Water Systems	BA-300S (up to 2”)	T-595-Y-66	82-140-57
Gate Valve for shutoff and isolation	2” to 4” (threaded)	Water supply and distribution	------	T-617-O	------
Gate Valve for shutoff and isolation	2” to 8” (flanged)	Water supply and distribution	2885-FP	F-617-O	------
*Requires extended stem in insulated lines, and in situations noted in the drawings.					

2.5 VALVE BOXES

A. For each underground valve installed by the Contractor, where indicated in the construction plans, the Contractor shall provide and install a valve box in the location(s) shown in the plans. These valve boxes shall be designed to withstand heavy vehicular traffic and shall have a locking cast iron cover. The word "**WATER**" shall appear on each cover. Valve boxes shall be supported independently from the piping and shall not touch the piping. The boxes shall be installed so that their tops are just flush with or slightly above finished grade or paving.

2.6 UNIONS

A. Provide and install unions at appropriate points to permit removal of pipe and equipment without injury to other parts of the system. No unions will be required in welded lines or lines assembled with solder joint fittings except at equipment items, machinery items and other special pieces of apparatus. Unions in copper lines shall be Class 125 ground joint brass unions or Class 150 brass flanges if required by the mating item of equipment. Companion flanges on lines at various items of equipment, machines and pieces of apparatus shall serve as unions to permit removal of the particular items.

2.7 DISSIMILAR METAL CONNECTIONS

A. In all domestic water lines where the material of the pipe is changed from ferrous to copper or brass, a dielectric coupling shall be used at the transition. Unions connecting ferrous pipe to copper or brass pipe shall be dielectric type equal to Epco and shall meet the following requirements. All changes in piping material from ferrous to any other metal shall be installed with a dielectric union or fitting.

B. Insulated unions shall have an impervious insulation barrier capable of limiting galvanic current to one percent of the short circuit current in a corresponding bimetallic joint. When dry, the insulation barrier shall be able to withstand a 600 volt breakdown test.

2.8 SANITARY WASTE AND VENT SYSTEM

A. The sanitary waste system shall be installed as indicated on the Drawings complete with all fixtures, drains, traps and required connections. All fixtures and drains shall be properly vented and trapped. The Contractor shall complete the installation of the sanitary drainage system by making approved connections as indicated on the Drawings.

B. All sanitary waste and vent piping, unless specifically shown to the contrary, shall be service weight cast iron soil pipe conforming to ASTM Specifications A-888, hubless ("No-Hub") for eight inch (8") and smaller, each piece of pipe and each fitting shall have the manufacturer's mark or name cast into it, from 5 feet outside the building footprint up to and including all waste and vent piping inside the building(s).

C. Clamps for no-hub piping shall conform to CISPI standard 301, and shall be 100 percent stainless steel, including the clamp body band, clamp straps, screw tighteners, and the bodies of the screw clamps. The sealing gasket shall be neoprene or EPDM rubber. All hubless clamps used in the project shall be stamped with the CISPI Approval, and shall be heavy duty with 4 bands on sizes up to 4” and 6 bands on sizes from 5” to 8”. Clamps shall be “Widebody” clamps as manufactured by Tyler Pipe or approved equal.

D. At the option of the contractor, bell and spigot piping may be used for sanitary waste. The material used shall be Tyler Pipe, "Tyseal" or approved equal, conforming to ASTM standard A-74, and shall be stamped with the NSF and UL stamps. Sealing of the joints shall use neoprene gastketing materials and an adhesive lubricant such as manufactured by Black Swan, applied as recommended by the manufacturer.

2.9 WATER HAMMER ARRESTORS

A. Acceptable Manufacturers:
   1. Wade
   2. Zurn
   3. Approved equal

B. Water hammer arrestors shall be installed as shown on the plumbing plans, extending connecting piping to above accessible ceilings or behind access panels, and shall be sized in accordance with Plumbing and Drainage Institute Standard PDI-WH201. If the latter is proposed, the Contractor shall submit a shop drawing of the complete plumbing plan, including all fixtures, and indicate the locations of all water hammer arrestors.

C. Water hammer arrestors shall be Wade Shokstops of all stainless steel construction with welded nested bellows, or approved equal.

2.10 FIXTURES, GENERAL

A. The Contractor shall provide plumbing fixtures where indicated on the Drawings. The fixtures shall be free from mars or chips and shall be new, first quality and shall be furnished with sufficient supports in order to adequately hang each and every unit. The space between fixtures and masonry walls shall be grouted with white silicone grout. The space between fixtures and gypboard or wood panel walls shall fit flat against the wall surface with no more than 1/16" gap.

B. Flush valves shall be as scheduled, and shall be the products of Sloan, Zurn, or approved equal.

2.11 FITTINGS AND PIPES FOR FIXTURES

A. All faucets, fittings, supply stops and similar devices shall be of one manufacturer unless otherwise specified. All water faucets and valve bodies shall be cast brass with a minimum copper content of 85%. They shall contain standardized interchangeable operating units ("cartridges") constructed of a removable and replaceable unit containing all parts subject to wear. All water faucets shall contain an adjustable internal volume control unit. All exposed parts shall be chromium plated, unless noted otherwise.

B. All faucets, supplies, stops, and hose bibbs used in this project shall all be products of the same manufacturer. All faucets, unless noted otherwise, shall be manufactured of solid cast brass, and have removable and repairable cartridges. All faucets shall be manufactured by Chicago Faucets or approved equal.

C. Fittings and piping shall be brass and, wherever exposed, shall be polished chrome-plated, unless noted otherwise.

D. Furnish and install all required water, waste, soil and vent connections to all plumbing fixtures, together with all fittings, supports, fastening devices, cocks, valves, traps, etc., leaving all in complete working order.

E. Supplies for all lavatories, sinks, and drinking fountains shall be loose key angle stops with 1/2" NPT female inlets and shall include wall flanges, and braided stainless steel riser hoses. All stops and riser hoses shall be installed under the sink or lavatory, and shall be accessible for use. All components shall be chrome plated, unless noted otherwise. In all cases, all piping, tubing, fittings, and faucets shall be installed using a mechanical connection, such as bull-nose, flared, flanged, or threaded fittings. Fittings requiring a friction fit using slip-on or gasketed connections are not acceptable.

2.12 LAVATORIES

A. Lavatories shall be as scheduled in the plumbing drawings.

2.13 WATER CLOSETS

A. Water closets, carriers, flush valves and seats shall be as scheduled in the plumbing drawings.

2.14 URINALS

A. Urinals, carriers and flush valves shall be as scheduled in the plumbing drawings.

2.15 HOSE BIBBS

A. Hose bibbs shall be as scheduled in the plumbing drawings. (NOTE that freezeproof hosebibbs may be of a different manufacturer than that of the other faucets and hosebibbs.)

2.16 ELECTRIC WATER COOLER

A. Electric water cooler(s) shall be as scheduled in the plumbing drawings.

2.17 ELECTRIC WATER HEATER

A. Water heater shall be as scheduled in the drawings.

B. Heating elements of low watt density Incoloy sheathed, immersion type, designed to be individually field replaceable.

C. Water temperature control adjustable from 90°F to 160°F.

D. Water heaters shall be supplied and installed with a temperature and pressure relief (T&P) valve. A hard drawn, rigid Type K copper drain line from the T&P valve shall be installed, and shall be terminated in the location shown in the drawings, a minimum of 2" above the lowest overflow point of a sink, mop sink, or floor drain. The termination of the drain shall be installed using a 90° ell fitting, installed in the "down" position directly over the receptacle.

E. All piping connections to the water heater (except for the T&P drain line) shall include a dielectric union and an isolation valve.

F. All water heaters shall be installed in a drain pan manufactured for that purpose, installed with a hard drawn, rigid Type K copper drain line, piped to the same location as the T&P drain line, and in the same manner described for the T&P drain line.

2.18 NATURAL GAS DISTRIBUTION SYSTEM

A. The natural gas system shall be installed using the materials and methods as specified herein and in the following paragraphs.

B. Gas Cutoffs: Shall be as required by the Gas Company and the Uniform Plumbing Code. Where requirements differ, the greater quality or quantity shall govern. Main service entrance to building valve to be a threaded iron body, lubricated plug valve as manufactured by Nordstrom, Figure 142, 200psi CWP, or approved equal. Gas cutoff valves shall be provided for each gas burning appliance. This valve shall be a lever operated, threaded brass, valve as manufactured by Conbraco Valve Company, Series 50, or approved equal.

C. Natural Gas Piping:

1. All pipe used for the fabrication of gas piping systems shall be Schedule 40 black steel pipe which conforms in every detail to Standard Specifications for WELDED AND SEAMLESS STEEL PIPE, ASTM Designation A53, Type E or S.

2. Unless otherwise specifically required, all steel pipe provided for gas piping systems shall be provided with plain ends and assembled with weld fittings on all pipe 2-1/2" and larger. All piping 2" and smaller shall be threaded. No pipe smaller than 3/4" shall be used. From the emergency shutoff valve to the outlets the pipe shall be assembled with threaded fittings provided all joints are exposed or within the confines of the laboratory furniture.

3. Note that galvanized, brass, and copper piping and fittings are PROHIBITED for use in natural gas service for this project.

D. Fittings: All threaded pattern fittings shall be Class 150 malleable iron fittings of Crane Company or Walworth Company manufacture (300 lb. for unions). Change of pipe size shall be by bell reducer. Reducing bushings are prohibited.

E. Dirt Legs: At all connections of gas piping to equipment or other points of use, a dirt leg shall be provided. Each dirt leg shall be sized no smaller than the gas piping to which they are

connected. The dirt legs shall be installed vertically at a change in pipe direction where the leg will be lower than the connected piping, and shall be no less than 6 inches long, unless noted otherwise. The dirt legs shall be installed with a pipe cap at the bottom of the leg to facilitate cleaning of the leg.

F. Protective Coating:

1. Gas piping systems installed underground shall utilize pipe which has been factory coated with Scotchkote protective resin No. 212. All materials, surface preparation, application and testing shall conform to Federal Specification L-C-530 B-Type 2, dated June 4, 1970. This coating shall be applied by A&A Coating Company, Lone Star, Texas, or equal submitted by Contractor.

2. Underground welded joints and fittings shall be coated with Scotchkote No. 306 epoxy resin and taped with vinyl Scotchwrap-50 brand tape. Flanged joints shall be given two coats of Koppers Company No. 300M Catalyzed Coal Tar Epoxy.

3. Under no circumstances shall any backfilling operations begin until these pipe protection operations have been completed, tested, and inspected.

2.19 COMPRESSED AIR DISTRIBUTION SYSTEM

A. Air Cutoffs shall be installed at the compressor discharge (or connection, for portable compressors), and at each point of use. Where requirements differ, the greater quality or quantity shall govern. The cutoff shall consist of a ball valve, and the operation of the handle shall not interfere with use of the tap, or the operation of the equipment. In most cases the ball valve shall be installed in a vertical position.

B. All points of use not shown in the drawings to be connected directly to equipment shall be installed not only with an “air cutoff” as described above, but also a quick disconnect air connection.

C. All pipe used for the fabrication of compressed air piping systems shall be Schedule 40 galvanized steel pipe which conforms in every detail to Standard Specifications for WELDED AND SEAMLESS STEEL PIPE, ASTM Designation A53, Type E or S. Unless otherwise specifically required, all galvanized steel pipe provided for compressed air piping systems shall be provided with threaded ends and assembled with flanged fittings on all pipe 2-1/2" and larger. All piping 2" and smaller shall be threaded. No pipe smaller than 3/4" shall be used. From the shutoff valve to the outlets the pipe shall be assembled with threaded fittings.

D. All threaded pattern fittings shall be Class 150 galvanized malleable iron fittings equivalent to those manufactured by Crane Company or Walworth Company (300 lb. for unions). Change of pipe size shall be by bell reducer. Reducing bushings are prohibited.

E. At all taps or connections of compressed air supply piping to equipment or other points of use shall be made in the vertical <u>upward</u> direction. This is intended to allow for the draining of water or condensation back to the tank.

PART 3 - EXECUTION

3.1 EXAMINATION

A. Verify that walls and floor finishes are prepared and ready for installation of fixtures.

3.2 PREPARATION

A. Ream pipe and tube ends. Remove burrs. Bevel plain end ferrous pipe.

B. Remove scale and dirt, on inside and outside, before assembly.

C. Prepare piping connections to equipment with flanges or unions.

D. Coordinate cutting and forming of floor construction to receive plumbing fixture rough-ins to required elevations.

E. Rough-in fixture piping connections in accordance with minimum sizes indicated in fixture rough-in schedule for particular fixtures.

3.3 INSTALLATION

A. Provide non-conducting dielectric connections wherever joining piping of dissimilar metals. All such fittings and/or unions shall comply with the requirements listed in Part 2 of this section, as well as any special requirements listed in the drawings.

B. Install isolation valves and unions at each piece of equipment, such as water heater, etc., and in such a manner to allow for ease of removal of the equipment.

C. Route piping in an orderly manner and maintain gradient.

D. Install piping to conserve building space and not interfere with use of space. All piping shall be installed against the building construction, and shall not be installed in such a manner to interfere with the free movement of personnel within the space. Installation of piping shall not interfere with the ability of personnel to service and maintain equipment and systems within the space.

E. Group piping whenever practical at common elevations.

F. Install piping to allow for expansion and contraction without stressing pipe, joints, or connected equipment.

G. Provide clearance for installation of insulation and access to valves and fittings.

H. Provide access where water hammer arrestors, valves and fittings are not exposed. Coordinate access door location with architectural features.

I. Establish elevations of buried piping outside the building to ensure a minimum of cover. Refer to details, if any, in the drawings.

J. Install valves with stems upright or horizontal, not inverted.

K. Threaded piping shall have pipe dope applied to the threads of the piping prior to assembly. The acceptable pipe dope shall be graphite or Teflon based paste (no lead solder is allowed in any part of this project) or a minimum of three layers of Teflon tape. Note that it is not acceptable to use excessive amounts of pipe dope to seal leaky pipe fittings, nor is it acceptable to use materials other than acceptable pipe dope materials to seal pipe fittings.

L. Install in accordance with manufacturer's instructions.

M. Extend cleanouts to finished floor or wall surface. Lubricate threaded cleanout plugs with a mixture of graphite and linseed oil. Ensure clearance at cleanout for rodding of drainage system.

N. Install water hammer arrestors complete with accessible isolation valve [on hot and cold water supply piping to lavatories, sinks, and washing machine outlets].

O. Lead: It is forbidden that lead in any form be used in any water system other than waste. If lead is used in the fabrication or installation of any water system other than waste, then ALL of the installed equipment and material, which may have come in contact with the lead, shall be marked with bright red or orange spray paint, and shall be removed from the project site. The system(s) shall then be restored and reinstalled using ALL NEW MATERIALS.

P. Furnish and install all labor, materials, equipment, tools and services and perform all operations required in connection with or properly incidental to the installation of complete plumbing fixtures, as indicated on the Drawings, reasonably implied therefrom, or as specified herein, unless specifically excluded.

Q. Plumbing fixtures shall be supplied, set and connected as listed herein and as shown on the Drawings. Fixtures shall be protected from damage during construction, and shall be thoroughly cleaned of all tape and adhesives prior to final acceptance.

R. Coordinate special mounting heights of plumbing fixtures with architectural details of each toilet area.

S. Install each fixture with trap, easily removable for servicing and cleaning. The installation of multiple traps in-line is prohibited.

T. Install components level and plumb, except for piping requiring a slope.

U. Install and secure all fixtures in place with specified wall carriers and bolts.

V. Solidly attach floor mounted water closets to floor with lag screws. Flashing is not intended to hold fixture in place. Wall mounted water closets shall be mounted securely to carrier with long studs, washers and nuts.

W. Install ADA (mobility impaired accessible) water closets with flush valve operating handle, or pushbutton, oriented toward the latch side of the partition door, or toward the more open side of the water closet enclosure, whichever is more accessible for operation.

X. Install water heaters per manufacturer's instructions and as detailed on drawings. Set initial temperature at 110°F.

3.4 ERECTION TOLERANCES

A. Establish invert elevations, slopes for drainage to 1/8 inch per foot (one percent) minimum for all piping systems except for waste water piping. Install waste water piping with 1/4 inch per foot (two percent) minimum gradient. Maintain gradients through each joint of pipe and throughout system. All other dimensions shall be installed within 1/4 inch, unless noted otherwise.

3.5 ALLOWABLE BENDS

A. Unless specifically allowed in the pipe manufacturer's design criteria, deflections of the pipe will not be allowed at couplings. An allowable radius for pipe sections may be determined from the pipe manufacturer, and shall be submitted for approval by the Owner prior to installation.

B. Bends in soft drawn copper piping shall be made using a tubing bender designed for the purpose of bending the size of pipe being installed.

3.6 DOMESTIC WATER PIPING SYSTEMS

A. All piping shall have reducing fittings used for reducing or increasing where any change in the pipe sizes occurs. No bushing of any nature shall be allowed in any piping.

B. All exposed chrome plated, polished or enameled connections from fixtures shall be installed with special care, showing no tool marks or threads at fittings, and supported where appropriate by neat racks or hangers with round head screws of same material and finish.

C. Wade Shokstop, or approved equal, sealed air chambers shall be provided in all water branches to fixtures, sized in accordance with manufacturer's recommendations, concealed, accessible, and located so as to protect each group of plumbing fixtures. Equal products of other manufacturers will be considered for approval.

D. The fabrication of copper pipe and fittings shall in every detail conform to the recommendations and instructions of the fitting manufacturer. The tools used shall be the tools adapted to that specific purpose.

E. Piping to flush valves shall be firmly secured to prevent movement when operating the valves.

F. Refer to other parts of this Section for other information concerning installation of piping.

3.7 TESTING OF ALL POTABLE WATER SYSTEMS

A. All water piping systems shall be tested. In the event a piping system is to be insulated or concealed, the piping system shall be flushed and these tests shall be satisfactorily completed before any insulation is applied or the piping system is concealed. Buried piping systems shall be flushed, tested and disinfected prior to the backfill and covering of any of the piping. In the event that the trenches are backfilled prior to the witnessed (by the Owners Construction Inspector, or designate) completion of the testing, flushing and sterilization of the piping system, then the Contractor shall expose the piping and discard all backfill materials in an acceptable manner, and complete the specified procedure. The backfill of the piping trenches shall then be completed as specified.

B. The procedure of these tests shall consist of subjecting a piping system to the hydrostatic pressure listed at the end of this Section, (or 150 percent of maximum working pressure, if a working pressure is specified, whichever is less) for the period indicated in the table. During this test period, all pipe, fittings and accessories in the particular piping system which is being tested shall be carefully inspected. If leaks are detected, such leaks shall be stopped by means designated by the Owner's duly authorized representative and the hydrostatic test shall again be applied. This procedure shall be repeated until, for the entire test period, no leaks can be found while the system being tested is subjected to the pressure mentioned above. Note that the "detection of leaks" shall include a drop in test pressure of 5 pounds per square inch (a minimum

of 3 percent of test pressure) or more.

C. Wherever conditions permit, each piping system shall thereafter be subjected to its normal operating pressure and temperature for a period of no less than five (5) days. During that period, it shall be carefully observed. The piping systems must demonstrate the propriety of their installation by remaining absolutely tight and without leaks during this period.

3.8 DISINFECTION OF DOMESTIC WATER PIPING SYSTEM

A. Water for flushing, testing, and disinfection of potable domestic water piping systems will be furnished by the Contractor. The Contractor shall furnish all labor, equipment, and materials necessary to complete the system disinfection procedures specified herein.

B. Prior to starting work, verify system is complete, tested, flushed and clean.

C. Ensure pH of water to be treated is between 7.4 and 7.6 by adding alkali (caustic soda or soda ash) or acid (hydrochloric).

D. Inject disinfectant (liquid chlorine conforming with U.S. Army Specification No. 41, calcium hypochlorite, or chlorinated lime conforming with the requirements of Federal Specification O-C-114), throughout system to obtain 50 to 80 mg/L residual Chlorine at all outlets or taps.

E. Bleed water from outlets to ensure distribution and test for disinfectant residual at a minimum of 15 percent of outlets.

F. Maintain disinfectant in system for 24 hours.

G. If final disinfectant residual tests less than 25 mg/L residual Chlorine, repeat treatment.

H. Flush disinfectant from system until the residual Chlorine is equal to that of incoming water or a maximum of 1.0 mg/L.

I. Take samples no sooner than 24 hours after flushing, from a minimum of 10 percent of outlets and from water entry, and analyze in accordance with AWWA C651.

J. The sterilization process shall be conducted as required by the Health Department of the local county, and the specifications above, and upon completion of the process, the Contractor shall contact the Health Department to test and certify the cleanliness of the water piping system. The Contractor shall pay all costs and charges, if any, incidental to this test and certification as a part of this project.

3.9 INSTALLATION OF SANITARY WASTE PIPING

A. Install in strict accordance with manufacturer's recommendations.

B. Lubricate cleanout plugs with mixture of graphite and linseed oil. Prior to substantial completion remove cleanout plugs, relubricate and reinstall using only enough force to ensure a leakproof joint.

C. Slope drainage lines minimum 1/4" per foot, 1/2" per foot maximum for waste lines.

D. Install exterior cleanouts at grade and set in concrete pad as detailed on drawings.

E. Flush piping clean with water after installation.

3.10 FABRICATION METHODS FOR SEWAGE AND DRAINAGE PIPE LINES

A. Complete the installation of all sewer drains and piping promptly after excavating, chasing or cutting for same has been done so as to keep the openings for such piping open as short a time as possible. No piping shall, however, be permanently closed up, furred in or covered before the testing and inspection of same by the authority(ies) having jurisdiction.

B. Waste pipes shall be sized to conform to the sizes indicated on the Drawings. Under no circumstances shall any drain line be smaller than two inches. The waste pipes from water closets shall not be smaller than four inches.

C. The drilling and tapping of soil or waste lines is prohibited.

D. Vent pipes shall be of same material as drainage piping.

E. All vent lines shall be so constructed that they cannot be used for waste or soil lines.

F. No fixture shall be double trapped.

G. All connections for wall mounted water closets and waste piping shall be made with an appropriate cast iron closet carrier and seal as recommended by the carrier manufacturer.

3.11 TESTING SANITARY WASTE SYSTEMS:

A. After the vertical lines of soil pipe, waste, and other parts of the sanitary system have been set, all outlets shall be temporarily "plugged up", except as are required for testing as described herein. The piping shall be tested to the pressure and time listed in the table at the end of this section. The pipes shall be filled with water to a verifiable and visible level as described above and be allowed to remain so for the test period indicated in the table at the end of this section. If, end of the test period, the level of the water has been lowered by leakage, the leaks shall be found and repaired, and the water level shall again be raised to the level described, and the test repeated until, after the test period, there shall be no perceptible lowering of the water level in the system being tested.

B. Should the completion of these tests leave any reasonable doubt relative to the integrity of the installation, additional tests or measures shall be performed to demonstrate the reliability of these systems to the complete satisfaction of the Owner's duly authorized representative. Such tests shall be conducted and completed before any joints in plumbing are concealed or made inaccessible.

C. After all testing operations have been completed, all waste and vent lines shall be flushed with clean water.

3.12 INTERFACE WITH OTHER PRODUCTS

A. Review millwork shop drawings. Confirm location and size of fixtures and openings before rough-in and installation.

3.13 ADJUSTING

A. Adjust work under provisions of Section 15050.

B. Adjust stops or valves for intended water flow rate to fixtures without splashing, noise, or overflow.

3.14 CLEANING

A. Clean work under provisions of Section 15050.

B. At completion clean plumbing fixtures and equipment.

3.15 PROTECTION OF FINISHED WORK

A. Protect finished Work under provisions of Section 15050.

B. Do not permit any use of fixtures during construction, until after Substantial Completion has been announced by Owner.

3.16 FIXTURE HEIGHTS (All heights are "above finished floor" unless noted otherwise. All heights listed shall be used, unless noted otherwise in 1) Architectural, or 2) Plumbing, Plans.)

A. Tolerances: Note that all heights listed herein are intended to allow a tolerance of ±1/2", unless a specific range is given.

B. Water-Closet

1. Standard: nominal 14 inches to top of bowl rim
2. Accessible: 17 to 19 inches to top of installed elevation of seat.

C. Urinal

1. Standard: 25 inches to bowl rim
2. Accessible: 17 inches to bowl rim, and shall project a minimum of 14 inches from wall.

D. Lavatory (All installations): 32 inches to top of basin rim.

E. Hose Bibb (All installations): 18 inches A.F.F. (above final grade, if no floor) to center of outlet of hose bibb.

3.17 NATURAL GAS DISTRIBUTION SYSTEM FABRICATION METHODS

A. All interior gas piping shall, wherever possible, be installed so as to grade back toward the building entrance.

B. All piping shall be securely fastened in place in such a manner as to maintain its grading. Under no circumstances shall any gas piping be used to support any weight other than its own weight.

C. The general arrangement of all gas piping shall be such that the number of threaded joints involved is reduced to an absolute minimum. If obstructions are encountered, pipe shall not be bent to avoid such obstructions. Welding fittings shall be used for this purpose in the case of welded lines, and if threaded lines are involved, threaded fittings shall be used. Wherever gas pipes run through outside brick, stone, or other walls, the opening around the pipe shall be

securely and rigidly sealed with a resilient seal. Gas pipe sizes shall be at least one pipe size larger than the inlet of the gas appliance which they supply. No bushings shall be used in the installation of the system. If pipe sizes must be changed, then only bell reducers may be used.

D. Gas piping shall be thoroughly tested after installation. The procedure of these tests shall consist of subjecting a piping system to a pneumatic (air) pressure as listed in the table at the end of this section. The length of the test shall be as given in the table. During this test period, all pipe, fittings and accessories in the piping system which is being tested shall be carefully inspected with a soapy leak testing fluid. If leaks are detected, such leaks shall be stopped by means designated by the Owner's duly authorized representative and the test shall again be applied. This procedure shall be repeated until, for an entire twenty-four hour period, no leaks can be found while the system being tested is subjected to the pressure mentioned above. Note that the "detection of leaks" shall include a drop in test pressure of 5 pounds per square inch or more.

3.18 COMPRESSED AIR DISTRIBUTION SYSTEM FABRICATION METHODS

A. All interior compressed air piping shall, wherever possible, be installed so as to grade back toward the compressed air tank.

B. All air piping shall be securely fastened in place in such a manner as to maintain its grading. Under no circumstances shall any piping be used to support any weight other than its own weight.

C. The general arrangement of all air piping shall be such that the number of joints installed is reduced to an absolute minimum. If obstructions are encountered, pipe shall not be bent to avoid such obstructions. Welding fittings shall be used for this purpose in the case of welded lines, and if threaded lines are involved, screwed fittings shall be used. Wherever pipes run through exterior brick, stone, or other walls, the opening around the pipe shall be securely and rigidly sealed. No bushings shall be used in the installation of the system. If pipe sizes must be changed, then only bell reducers may be used.

D. Compressed air piping shall be thoroughly tested after installation. The procedure of these tests shall consist of subjecting a piping system to the pneumatic (air) pressure indicated in the table at the end of this Section for the test period indicated. During this test period, all pipe, fittings and accessories in the particular piping system which is being tested shall be carefully inspected. If leaks are detected, such leaks shall be stopped by means designated by the Owner's duly authorized representative and the test shall again be applied. This procedure shall be repeated until, for an entire twenty-four hour period, no leaks can be found while the system being tested is subjected to the pressure mentioned above. Note that the "detection of leaks" shall include a drop in test pressure of 5 pounds per square inch or more. If there is a significant change in ambient temperature from the beginning to the end of the test, then this shall be considered if there is a significant drop in pressure. At the discretion of the State's representative, the test may be repeated.

E. Wherever conditions permit, the piping system shall thereafter be subjected to its normal operating pressure and temperature for a period of no less than five (5) days. During that period, it shall be carefully observed. The piping systems must demonstrate the propriety of their installation by remaining absolutely tight and without leaks during this period.

3.19 TESTING:

A. All piping systems shall be tested at pressures appropriate to their service. The following test pressures and periods of test shall be used, unless noted otherwise. If lesser pressures or test periods are specified, then the pressures and periods listed below shall prevail:

Piping System	Test Pressure	Test Period
Water	100 psig	1 hour
Sanitary Sewer & Vent	10 ft of head	1 hour
Natural Gas	10 psig	1 hour
Compressed Air	150 psig	1 hour

END OF SECTION

SECTION 15540
FUEL FIRED HEATERS

PART 1 - GENERAL

1.1 SECTION INCLUDES

A. Low Intensity Tube Infrared Heaters

B. High Intensity Ceramic Burner Infrared Heaters

C. Point of use Pressure Regulators

1.2 RELATED SECTIONS

A. Section 15050 - Basic Mechanical Requirements

B. Section 15060 - Supports and Anchors

C. Section 15400 - Plumbing Piping and Associated Materials

1.3 REFERENCES

A. NFPA 54 - National Fuel Gas Code

B. AGA - American Gas Association

C. UMC - Uniform Mechanical Code, latest edition

D. ANSI/ASHRAE 90A - Energy Conservation in New Building Design

E. UPC - Uniform Plumbing Code, latest edition

1.4 SUBMITTALS

A. Submit under provisions of UGC, Special Conditions, and Section 15050.

B. Product Data: Provide data on infrared heaters, input ratings, manufacturer’s recommended clearances, dimensions, tube size and construction. Provide manufacturers catalog information on indoor and outdoor thermostats, connections to emitter tubes for single and double venting combustible product as well as combustible air.

1.5 QUALITY ASSURANCE

A. Radiant Heaters: Manufacturer’s name, American Gas Association label, and input rating clearly shown on burner housing.

B. Thermostats: Manufacturer's name and the (UL) label and NEMA classification clearly shown on thermostats and radiant heaters.

C. Manufacturer's Installation Instructions: Indicate assembly and support requirements.

D. Ensure products and installation of specified products are in conformance with recommendations and requirements of the following organizations:
   1. National Electrical Manufacturers' Association (NEMA).
   2. Underwriters Laboratories (UL).
   3. AGA - American Gas Association.

4. ANSI B31.2 - Fuel Gas Piping.
5. ANSI Z83.6 - Gas-Fired Infrared Heaters.

1.6 QUALIFICATIONS

A. Manufacturer: Company specializing in manufacturing the Products specified in this section with minimum three years documented experience.

1.7 REGULATORY REQUIREMENTS

A. Perform Work in accordance with the following: Uniform Plumbing Code, Uniform Mechanical Code, National Fuel Gas Code (NFPA-54), TNRCC and TDH Regulations.

1.8 DELIVERY, STORAGE, AND HANDLING

A. Deliver, store, protect and handle products to site under provisions of Section 15050.

B. Accept valves on site in shipping containers with labeling in place. Inspect for damage.

C. Provide temporary end caps and closures on piping and fittings. Maintain in place until installation.

D. Protect the emitter tubes and the ceramic burners from entry of foreign materials by use of temporary covers, completing sections of the work, and isolating parts of completed system.

1.9 WARRANTY

A. Contractor shall provide one-year warranty on all materials and workmanship, a manufacturer five-year warranty on tube heater's combustion and radiant emitter tube assembly and a 10-year warranty on the ceramic burners.

PART 2 - PRODUCTS

2.1 GENERAL

A. Equipment capacities and options shall be as scheduled, or as specified herein, whichever is greater.

B. In some cases it may not be possible to describe in adequate detail the exact installation of a feature or equipment. In those instances, the Contractor shall solicit the guidance and direction of the Owners Construction Inspector, whose decision will be final.

2.2 MANUFACTURER (Note: all low and high intensity infrared heaters, thermostats, dual exhaust assemblies and elbow 90° bends shall be products of the same manufacturer).

A. Re-verber-ray, Model DX and DR Series heaters as indicated in drawings.

B. Ray-Tec

C. Approved equal.

2.3 GAS-FIRED TUBULAR INFRARED HEATERS

A. Comply with ANSI Z83.6, “Gas-Fired Infrared Heaters”.

B. Certified label by American Gas Association.

C. Certified label by Underwriters' Laboratories.

D. Designed and built to burn liquid propane gas with characteristics same as those of gas available at Project site.

E. Factory assembled, piped, wired, and tested for 120 VAC.

F. Stainless steel or aluminized steel with high-emissivity, high-temperature, corrosion-resistant external finish.

G. Heater shall be equipped with a direct silicon carbide ignition system, two safety differential pressure switches, pre-purge feature before initiating burner operation and a burner sight glass visible from the floor of the occupied space.

H. Reflectors shall be polished stainless steel or aluminum, with reflector end caps, capable of rotating from 0 to 45 degrees when required.

I. As indicated in plans install a dual exhaust assembly “Y” shaped aluminized steel with high temperature coating connecting to a 6 inch Type “B” vent with both heaters on a common thermostat.

2.4 OPERATING CONTROLS (“Thermostat”):

A. External thermostats shown in schedule.

PART 3 - EXECUTION

3.1 INSTALLATION

A. Install heaters according to manufacturer’s written instructions.

B. Install and connect gas-fired heaters and associated fuel and vent features and systems, installed and connected according to NFPA-54, applicable local codes and regulations, and manufacturer’s printed installation instructions.

C. Where indicated in plans install a dual exhaust assembly “Y” shaped aluminized steel with high temperature coating connecting to a 6 inch Type “B” vent, heaters shall be controlled with a common thermostat.

D. All tube heaters shall have an outside combustible air intake vent (PVC 4-inch vent). Provide insect screen on imlet.

E. As part of the requirements shown here and in the plans, Contractor will be required to coordinate trades to minimize interference with the installation and placement of the radiant heaters. Contractor is required to install the radiant heaters where indicated on plans. If

Contractor feels the placement of the radiant heaters is not achievable due to interference, combustible clearances, safety issues or possible hazards, he or she shall seek advice and guidance through the Owner's Construction Inspector and/or Engineer whose decision shall be final.

3.2 ADJUSTING AND CLEANING

A. Adjust natural gas pressure reducing regulators for optimum pressure requirements as recommended by manufacturer. Contractor is required to adjust building pressure regulator to deliver proper pressure to the point of use regulators that shall be installed for each and every radiant heater, as recommended by manufacturer.

B. Adjust burner and other unit components for optimum heating and performance and efficiency. Adjust heat distribution features, including reflectors, to provide optimum heat distribution for objects, personnel, and spaces served.

C. After completing system installation, inspect heaters and associated components. Repair scratches and mars of finish to match original finish. Clean unit internally using methods and materials recommended by manufacturer.

3.3 COMMISSIONING

A. Startup Services shall be provided to start and demonstrate units, and operate controls and safeties.

B. Test and Adjust controls and safeties, replace damaged or malfunctioning controls and equipment.

C. Correct deficiencies identified by test and observations and retest until specified requirements are met.

3.4 OPERATION AND MAINTENANCE

A. The final installation shall be complete and functional in every respect. The equipment shall perform as specified, and all features of every piece of equipment installed under this contract shall be accessible for operation and maintenance. In addition, the installation of the materials or equipment for this project shall provide access for all features for the operation and maintenance of related or adjacent equipment to the materials and equipment installed under this project. Contractor shall install all equipment and materials as specified so that all equipment is completely accessible for such maintenance and operation as changing blower motors, oiling fans, inspecting and repairing controls, etc.

END OF SECTION

SECTION 15761
DUCTLESS AIR CONDITIONING SYSTEMS

PART 1 - GENERAL

1.1 SECTION INCLUDES.

A. Outside unit.

B. Refrigerant piping and insulation.

C. Condensate piping and insulation.

D. Controls.

E. Condensate drain.

1.2 SCOPE

A. The Contractor shall install a wall mounted ductless air conditioning unit (cooling only) and all appurtenances complete in every respect, as specified herein. The completed installation shall be fully functional and comply with all state, federal and local codes, standards and regulations.

1.3 RELATED SECTIONS

A. Section 15050 - Basic Mechanical Requirements

1.4 REFERENCES - In addition to state and local ordinances, standards and codes published by the following shall govern the quality of the construction applicable:

A. ASHRAE - American Society of Heating, Refrigeration and Airconditioning Engineers.

B. ARI - American Refrigeration Institute.

C. SMACNA - Sheet Metal and Airconditioning Contractors National Association.

D. NEC - National Electrical Code (NFPA 70).

1.5 SUBMITTALS

A. Submit under provisions of the Uniform General Conditions and Special Conditions, and Section 15050.

B. Product Data: Submittal(s) shall include manufacturers data on all equipment and materials, including air conditioner equipment (including rated capacities, electrical characteristics and connection requirements), piping (refrigerant and drain piping) insulation, and thermostat.

C. Submit credentials of Contractor and responsible on-the-job employees.

D. Submit Manufacturer's Installation Instructions.

1.6 QUALITY ASSURANCE

A. Perform Work in accordance with ANSI/ASHRAE 15.

B. Install equipment in accordance with ASHRAE and SMACNA Standards, and Manufacturers recommendations.

C. All mechanical work shall be performed by, or under the direct supervision of, a locally licensed mechanical contractor with a minimum of five years of documentable experience in the installation and repair of similar equipment to that described for this project.

1.7 WARRANTY

A. Provide one year warranty on all materials and workmanship, and manufacturers five year warranty on air conditioning compressor.

PART 2 - PRODUCTS

2.1 GENERAL

A. Equipment capacities and efficiencies shall be as scheduled, or as specified herein, whichever is greater.

B. In some cases it may not be possible to describe in adequate detail the exact installation of a feature or equipment. In those instances, the Contractor shall solicit the guidance and direction of the Owners Construction Inspector, whose decision will be final.

2.2 MANUFACTURER (Note that both the inside and outside units shall be products of the same manufacturer.)

A. Friedrich

B. Mitsubishi

C. Sanyo

D. Approved equal.

2.3 OUTSIDE UNIT

A. Self contained factory built outdoor package containing compressor, refrigerant drier, reversing valve, condenser coil and condenser fan.

B. Compressor: hermetic, 3600 rpm maximum, resiliently mounted integral with condenser securely bolted in place, with positive lubrication, crankcase heater, high pressure control, motor overload protection, service valves and drier. Scroll compressors are preferred, but not required.

C. Air Cooled Condenser: copper tube and aluminum fin coil, with direct drive axial propeller fan resiliently mounted, galvanized fan guard.

D. Cooling Capacity: Rated cooling output as scheduled in the drawings.

E. Installation: The units shall be installed on a concrete equipment pad with a resilient pad at each corner of the unit, plus a resilient pad at the mid point of units longer than 4 feet. Each resilient pad shall be a 4" square ribbed neoprene sandwiching a layer of cork. The pad shall be constructed of a 1/2" layer of cork laminated between 1/4" layers of ribbed neoprene. The equipment platform shall be provided of such size that the pad shall be a minimum of 12 (twelve) inches larger than the unit on all sides, with 36 inches between units. Refer to detail(s) on drawing.

2.4 REFRIGERATION PACKAGE

A. Refrigerant Line Set: Sized as recommended by manufacturer. Insulation shall be installed on both refrigerant lines **prior** to installation. Install 1/2" thickness Armaflex (or approved equal), and paint insulation with two coats of exterior latex where insulation is exposed to sunlight.

2.5 INDOOR UNIT

A. Configuration: Electric refrigeration indoor coil and integral filter section with replaceable "throw-away" filter.

B. Units: Self-contained, units, factory assembled, pre-wired unit consisting of cabinet, supply fan, integral circuit breaker, controls, air filter, and inside coil. Cabinet shall be constructed with a high impact resistant plastic concealing all tubing and wiring. Cabinet panels shall be removable for complete access to all serviceable components.

C. Air Handling: Fan shall be capable of moving required air quantities required with a dirty filter in place. Provide belt driven blower(s) with heavy duty, self aligning, permanently sealed and lubricated bearings. All moving parts shall be resiliently mounted on a rugged frame, and isolated from the rest of the cabinet. Adjustable motor pulley shall provide variable speed adjustment.

D. Indoor Unit Inside Coil: Copper tube aluminum fin assembly, with drain pan, drain connection, refrigerant piping connections and factory installed thermostatic expansion valve.

E. Controls: Each unit shall be furnished with a complete and working system of controls, contactors, relays, control power transformer, and terminal block.

F. The unit shall be supplied with a factory manufactured return grille, mounted directly to the unit, for a "non-ducted" air return. The return grille shall not interfere with the removal and replacement of filters.

2.6 CONDENSATE DRAIN:

A. Condensate piping shall be Type K copper, installed with a minimum of 1/8 inch per foot slope, shall have a minimum 4 inch deep P-trap, and shall be completely insulated with 1/2" wall Armaflex closed cell piping insulation, or approved equal. All turns in the piping system shall be accomplished using long sweep bends. Short radius 90's shall not be used.

2.7 SECONDARY DRAIN:

A. If the equipment is supplied with a secondary drain connection, piping shall be Type K copper, installed with a minimum of 1/8 inch per foot slope, installed without a "P-trap", and connected to the primary condensate drain ahead ("upstream") of the primary drain P-trap.

2.8 OPERATING CONTROLS ("Thermostat"):

A. Programmable low voltage (24 volt DC) thermostat with subbase, cycle's indoor and outdoor unit to maintain room temperature setting. Thermostat shall be equipped with a subbase with an "off-cool" switch, where the "off" setting shall disable the system. The "cool" setting shall cycle the outdoor unit on and off to maintain the room temperature setting. Thermostat subbase shall also be equipped with a "FAN: On - Auto" switch which in the "auto" position, shall cause the fan to operate automatically with the cooling cycles, and in the "on" position, the fan shall be "on" at all times. The thermostat shall be capable of controlling the room temperature within 2 degrees of setpoint. Programmability shall include four daily setpoints or two each of "occupied" and "unoccupied" periods per day. Weekdays shall be programmed separate from weekend days, but not necessarily individually. Thermostat shall be manufactured by unit

manufacturer, unless noted otherwise. Operating manuals shall be supplied with each thermostat.

B. Remotely operated temperature controls are acceptable as an alternative, and shall be submitted for approval by the engineer.

PART 3 - EXECUTION

3.1 GENERAL

A. **When removing refrigerant for any reason, Contractor shall capture refrigerant with a compressor package designed and manufactured for that purpose, and dispose of the refrigerant to a certified refrigerant recycling facility. Under no circumstances shall refrigerant be released directly to the atmosphere. All refrigerants shall be handled and stored as required by current federal, state and local standards, recommendations, regulations, ordinances, and laws.**

B. Contractor shall install refrigerant piping, and charge unit. Charging unit consists of drawing a complete vacuum on the refrigerant containing system, including piping, and charging with new refrigerant. Care shall be taken in the installation of refrigerant to eliminate the discharge of refrigerant to the atmosphere. System shall be run and pressures checked to assure that system is properly charged.

C. The finished cooling system shall operate as specified and according to the standards, guidelines and regulations referenced.

D. Electrical installation, connection of equipment to electrical supplies and installation of wiring and conduit shall conform to NEC standards, recommendations and requirements, and to the electrical drawings.

3.2 OPERATION AND MAINTENANCE:

A. The final installation shall be complete and functional in every respect. The equipment shall perform as specified, and all features of every piece of equipment installed under this contract shall be accessible for operation and maintenance. In addition, the installation of the materials or equipment for this project shall provide access for all features for the operation and maintenance of related or adjacent equipment to the materials and equipment installed under this project. Contractor shall install all equipment and materials as specified so that all equipment is completely accessible for such maintenance and operation as changing filters, operating disconnect switches or breakers, inspecting and repairing controls, cleaning coils, etc.

END OF SECTION

SECTION 15767
HEAT PUMP AIR CONDITIONING SYSTEMS

PART 1 - GENERAL

1.1 SECTION INCLUDES:

A. Air Handler Indoor units

B. Heat pump outside units

C. Controls

1.2 SCOPE

A. The Contractor shall install heat pump systems with electric auxiliary heat and all appurtenances complete in every respect, as specified herein. The completed installations shall be fully functional and comply with all state, federal and local codes, standards and regulations.

1.3 RELATED SECTIONS

A. Section 15050 – Basic Mechanical Requirements

B. Section 15097 – Duct Insulation

C. Section 15810 – Ductwork

D. Section 15820 - Ductwork Accessories

1.4 REFERENCES - In addition to state and local ordinances, standards and codes published by the following shall govern the quality of the construction applicable:

A. ASHRAE – American Society of Heating, Refrigeration and Airconditioning Engineers.

B. ARI – American Refrigeration Institute.

C. SMACNA – Sheet Metal and Airconditioning Contractors National Association.

D. NEC – National Electrical Code (NFPA 70).

E. UMC – Uniform Mechanical Code, latest edition.

F. UPC – Uniform Plumbing Code, latest edition.

1.5 SUBMITTALS

A. Submit under provisions of the Uniform General Conditions and Special Conditions, and Section 15050.

B. Product Data: Provide manufacturers data on all equipment and materials, including indoor and outdoor unit and air conditioner equipment (including rated capacities, electrical characteristics and connection requirements.

C. Manufacturer's Installation Instructions.

1.6 QUALITY ASSURANCE

A. Perform Work in accordance with ANSI/ASHRAE 15.

B. All mechanical work shall be performed by, or under the direct supervision of, a locally licensed mechanical contractor with a TDLR Class "A" Installer's License, and a minimum of five years of documentable experience in the installation and repair of similar equipment to that described for this project.

C. No asbestos-bearing, or solvent based, or lead containing materials shall be used on this project. If any prohibited materials are installed, all of the material, including the underlying material, shall be removed and disposed of as required by local, state, and federal requirements.

1.7 WARRANTY

A. Provide one-year warranty on all materials and workmanship, and manufacturer's five-year warranty on air conditioning compressors.

PART 2 - PRODUCTS

2.1 GENERAL

A. Equipment capacities and efficiencies shall be as scheduled, or as specified herein, whichever is greater.

B. In some cases it may not be possible to describe in adequate detail the exact installation of a feature or equipment. In those instances, the Contractor shall solicit the guidance and direction of the Owners Construction Inspector, whose decision will be final.

2.2 HEAT PUMP and AIR HANDLER MANUFACTURER (Note that both the inside and outside units shall be products of the same manufacturer.)

A. Trane

B. Carrier

C. Lennox

D. Approved equal.

2.3 OUTSIDE UNIT

A. Self contained factory built outdoor package containing compressor, refrigerant drier, reversing valve, condenser coil and condenser fan.

B. Compressor: hermetic, 3600 rpm maximum, resiliently mounted integral with condenser securely bolted in place, with positive lubrication, crankcase heater, high pressure control, motor overload protection, service valves and drier. Scroll compressors are preferred, but not required.

C. Air Cooled Condenser: copper tube and aluminum fin coil, with direct drive axial propeller fan resiliently mounted, galvanized fan guard.

D. Cooling Capacity: Rated cooling output as scheduled in the drawings in accordance to A.R.I. Standard 210/240 Rating Conditions.

E. Unit shall include low ambient controls for operation at ambient conditions down to 20°F.

F. Installation: The units shall be installed on a poured-in-place concrete equipment pad with a

resilient pad at each corner of the unit, plus a similar resilient pad at the mid point of units longer than 4 feet. Each resilient pad shall be 4" square. The pads shall be constructed of a 1/2" layer of cork laminated between 1/4" layers of ribbed neoprene. The equipment platform shall be provided of such size that the pad shall be a minimum of 6 (six) inches larger than the unit on all sides, with a minimum of 48 inches between units. Refer to detail(s) on drawing. In the event of a conflict, the greater quantity, quality, and distances shall prevail.

2.4 INDOOR UNIT

A. Configuration: Horizontal type with electric heating, electric refrigeration heat pump coil, and integral filter section with replaceable "throw-away" filter. There shall be a single point electrical connection on each indoor unit/furnace.

B. Units: Self-contained, factory assembled, pre-wired unit consisting of cabinet, supply fan, electric heating unit, integral circuit breaker, controls, air filter, and heat pump inside coil. Cabinet shall be constructed of heavy gauge galvanized steel, completely lined with thick fiberglass insulation. Cabinet panels shall be removable for complete access to all serviceable components.

C. Heating Elements: Helix wound nichrome bare heating elements, directly exposed in the air stream.

D. Air Handling: Fan shall be capable of moving required air quantities required by both heating and cooling modes, with ductwork as designed connected to the equipment, and dirty filter in place. Provide belt driven blower(s) with heavy duty, self aligning, permanently sealed and lubricated bearings. All moving parts shall be resiliently mounted on a rugged frame, and isolated from the rest of the cabinet.

E. Heat Pump Inside Coil: Copper tube aluminum fin assembly, galvanized drain pan, drain connection, refrigerant piping connections and factory installed thermostatic expansion valve.

F. Controls: Thermal sequencer relay brings the heating elements on and off line, in sequence and equal increments, with a time delay between each element. Sequencer also initiates and terminates blower operation. Heaters shall be factory assembled with controls installed and completely prewired for plug-in field power connection. Fixed stop at maximum permissible setting, will de-energize electric heat on excessive temperature and re-energize when temperature drops to lower safe value. Each unit shall be furnished with a complete and working system of controls, contactors, relays, control power transformer, and terminal block.

2.5 REFRIGERATION PACKAGE

A. Refrigerant Line Set: Sized as recommended by manufacturer. Insulation shall be installed on each refrigerant line (both liquid and suction) prior to installation. Install 1/2" thickness Armaflex (or approved equal), and paint insulation with two coats of exterior grade latex where insulation is exposed to sunlight.

2.6 CONDENSATE DRAIN

A. Condensate drain piping shall be connected to the equipment and shall be Type "K" hard drawn copper. The complete condensate drain piping shall have a P-trap, and insulation consisting of 1/2" wall Armaflex, or approved equal. The P-trap shall have a wetted depth of a minimum of 3 inches. The drain at the unit shall be vented downstream of the P-Trap. Connect condensate

drains to the drainage system. Condensate drain shall have a minimum of a 1" (one inch) gap above the sanitary sewer piping.

B. Horizontally installed units shall be provided with a drain pan, configured to capture all condensate overflows from the unit. Pan shall be fitted with a float switch to sense when the pan is half full, and shall be wired into the controls to disable the unit.

2.7 SECONDARY DRAIN

A. If the unit has a connection for a secondary or "overflow" drain, then the drain shall be connected to the primary drain. Drain piping shall be constructed with the same materials as the primary drain, installed with a minimum of 1/8 inch per foot slope, installed without a "P-trap," and connected to the primary condensate drain ahead ("upstream") of the primary drain P-trap.

2.8 OPERATING CONTROLS ("Thermostat")

A. Programmable Room Thermostat: Low voltage (24 volt AC) programmable thermostat cycles heat pump and furnace to maintain room temperature setting. Thermostat shall be rated for 2 stage cooling and 3 stages of heating. Thermostat shall also be equipped with a "FAN: On – Auto" switch which in the "auto" position, shall cause the fan to operate automatically with the heating and cooling cycles, and in the "on" position, the fan shall be "on" at all times. The thermostat shall be capable of controlling the room temperature within 2 degrees of setpoint, except that in the second stage of heating, the temperature shall be maintained within 3 degrees of setpoint. The thermostat shall be capable of 4 settings per day, with each day of the week capable of individual programming. The thermostat shall automatically switch between heating and cooling, depending solely on whether the temperature in the building is above or below the programmed setpoint or "deadband" range. Thermostat shall be as manufactured by Johnson Controls Model #T500 HPP-1 or approved equal. An operating manual shall be supplied with each thermostat.

B. The "cool" setting shall enable the heat pump reversing valve in cooling mode and cycle the heat pump unit on and off to maintain the room temperature setting.

C. The "heat" setting shall enable the heat pump reversing valve in heating mode and cycle the heat pump on and off to maintain the room temperature setting.

D. A second stage of heating shall cycle furnace electric heat on and off if the heat pump is unable to satisfy heating demand.

PART 3 - EXECUTION

3.1 GENERAL

A. If refrigerant must be removed for any reason, Contractor shall capture refrigerant with a compressor package designed and manufactured for that purpose, and dispose of the refrigerant to a certified refrigerant recycling facility. Under no circumstances shall refrigerant be intentionally released directly to the atmosphere. All refrigerants shall be handled and stored as required by current federal, state and local standards, regulations and/or laws.

B. The installation of the complete system includes penetrations and modifications to the existing building.

C. The completed central heating and cooling system shall operate as specified and according to the standards, guidelines and regulations referenced.

D. Restore all damaged construction to an "as found" condition.

3.2 AIR CONDITIONER/FURNACE INSTALLATION

A. Install new air handlers, inside coils, drain piping, thermostats, outside units, refrigerant piping, and vapor and drain line insulation as specified. Connect equipment to ductwork and electrical supplies as necessary for a complete installation.

B. Install the air handlers in a manner to maximize the accessibility to the unit for maintenance, providing manufacturer recommended clearances. The installation shall not limit or restrict access to the filter, nor to the unit controls. In the event that the installation is found to restrict access to features requiring regular or occasional maintenance, the Contractor shall correct the installation of the equipment to comply with the requirements of this specification.

C. Contractor shall install refrigerant piping, and charge unit. Charging unit consists of drawing a complete vacuum on the refrigerant containing system, including piping, and charging with new refrigerant. Care shall be taken in the installation of refrigerant to eliminate the discharge of refrigerant to the atmosphere. System shall be run and pressures checked to assure that system is properly charged.

D. The finished central heating and cooling system shall operate as specified and according to the standards, guidelines and regulations referenced.

3.3 OUTSIDE UNITS

A. Install outside units in locations indicated in Site Plan, and as recommended by manufacturer. All recommended clearances shall be observed in the installation. Note that each unit shall be mounted on resilient vibration damping material, supported at all four corners.

3.4 THERMOSTAT INSTALLATION

A. Thermostats shall be mounted in the approximate location indicated in the drawings. Install each thermostat with a clear, locking, vandal proof guard. Provide operational manuals for thermostats as a part of the Manuals required for the closeout of the contract. The number of manuals provided shall equal the number of thermostats installed.

3.5 OPERATION AND MAINTENANCE

A. The final installation shall be complete and functional in every respect. The equipment shall perform as specified, and all features of every piece of equipment installed under this contract shall be accessible for operation and maintenance. In addition, the installation of the materials or equipment for this project shall provide access for all features for the operation and maintenance of related or adjacent equipment to the materials and equipment installed under this project. Contractor shall install all equipment and materials as specified so that all equipment is completely accessible for such maintenance and operation as changing filters, operating disconnect switches or breakers, inspecting and repairing controls, cleaning coils, etc.

END OF SECTION

SECTION 15810
DUCTWORK

PART 1 - GENERAL

1.1 WORK INCLUDED

A. Low pressure ducts for building ventilation, exhaust, HVAC supply and return, and outside air intake.

1.2 RELATED WORK

A. Submit under provisions of Uniform General Conditions, Special Conditions, and Section 15050.

B. Section 15050 – Basic Mechanical Requirements.

C. Section 15060 – Supports and Anchors.

D. Section 15097 – Ductwork Insulation.

1.3 REFERENCES

A. ASHRAE – Handbook of Fundamentals; Duct Design.

B. ASHRAE – Handbook of Equipment; Duct Construction.

C. ASTM A 90 – Weight of Coating on Zinc-Coated (Galvanized) Iron or Steel Articles.

D. ASTM A 525 – General Requirements for Steel Sheet, Zinc-Coated (Galvanized) by the Hot-Dip Process.

E. ASTM A 527 – Steel Sheet, Zinc-Coated (Galvanized) by Hot-Dip Process, Lock Forming Quality.

F. NFPA 90A – Installation of Air Conditioning and Ventilating Systems.

G. SMACNA – HVAC Duct Construction Standards.

H. UL 181 – Factory-Made Air Ducts and Connectors.

1.4 REFERENCES

A. Fundamentals Handbook, American Society of Heating, Refrigerating, and Air Conditioning Engineers (ASHRAE).

B. Equipment Handbook, ASHRAE.

C. HVAC Duct Construction Standards, 1995, Sheet Metal and Air Conditioning Contractors National Association (SMACNA).

D. HVAC Duct System Design, 1990, SMACNA.

E. Engineering Report No. 132 (Spacing of Duct Hangers), UMC.

1.5 DEFINITIONS

A. Duct Sizes: Duct sizes indicated in the drawings or specifications are inside clear dimensions.

1.6 REGULATORY REQUIREMENTS

A. Construct ductwork to NFPA 90A, NFPA 90B and NFPA 96 standards.

B. All duct materials must be UL 181, Class 1 listed.

1.7 SUBMITTALS

A. No submittals will be required for the work of this section, unless increased beyond the original contract requirements. If the work is increased, the requirement for submittals for the work of this section will be reevaluated.

PART 2 - PRODUCTS

2.1 DUCTWORK GENERAL

A. All ductwork indicated on the Drawings, specified or required for the air conditioning and ventilating systems shall be of materials as hereinafter specified unless indicated otherwise. All air distribution ductwork shall be fabricated, erected, supported, etc., as a minimum, in accordance with all applicable standards of SMACNA Duct Manuals where such standards do not conflict with NFPA 90A and where class of construction equals or exceeds that noted herein. Some aspects of this specification will exceed SMACNA and NFPA standards. All exhaust ductwork including toilet room exhausts shall be constructed as specified for low pressure ducts.

B. All ductwork shown on the Drawings, specified or required for the heating, ventilating and air conditioning systems shall be constructed and erected in a first class manner; level, vertical and parallel to building lines. The work shall be guaranteed for a period of one (1) year from and after the date of acceptance of the job against noise, chatter, whistling, vibration, and free from pulsation under all conditions of operation. After the system is in operation, should these defects occur, they shall be corrected as directed by the Engineer.

2.2 DUCTWORK, LOW PRESSURE, METAL

A. Fabricate low pressure metal duct from galvanized steel sheet having a zinc coating of 1.25 oz per sq ft for each side in accordance with ASTM A90 and conforming to ASTM A653 and A924 Standards. For rectangular ducts utilize drive slip or hemmed “S” slip joints. For round duct use crimp and bead joints.

B. All ductwork shown in the drawings is considered low pressure ductwork and shall conform to the requirements for a 2” W.G. System as described in SMACNA HVAC Duct Construction Standards unless a higher pressure requirement is noted on the drawings.

C. The metal gauges listed in the 1995 SMACNA HVAC Duct Construction Standards for a 2” W.G. System are the minimum which shall be used for this project, see table below. Metal gauges for round duct shall be at least 24 gauge for diameters up to 24”. It shall be noted that the Contractor is responsible that the metal gauge selected is heavy enough to withstand the physical abuse of the installation.

Maximum Rectangular Duct Size	US Standard Gauge	Thickness in inches		
		Minimum	Maximum	Nominal
Up to 10”	26	.0187	.0247	.0217
11” – 12”	24	.0236	.0316	.0276
13” – 14”	22	.0296	.0376	.0336
15” – 18”	20	.0356	.0436	.0396
19” – 20”	18	.0466	.0566	.0516
21” – 24”	16	.0575	.0695	.0635
Above 24”	Reinforcement is required for duct dimensions above 24”. See Table 1-5 in 1995 SMACNA “HVAC Duct Construction Standards, 2” w.g., Rectangular Duct Reinforcement.”			

D. In all supply ducts, and all other ducts noted on the drawings, non-radius elbows greater than 30º shall have turning vanes as detailed in Specification Section 15820 – Ductwork Accessories. Radius elbows shall have a centerline radius of 1-1/2 times the duct diameter or width. Duct turns greater than 90º are not allowed. Elbows of 90° may be radius type, having a centerline radius of 1-1/2 times the duct diameter or width. Elbows in round ducts may be smooth radius as described above or 4-piece 90 degree elbows or 3-piece 45 degree elbows.

2.3 DUCTWORK, LOW PRESSURE, FLEXIBLE

A. Flexible duct ("flex duct"), if used, shall be flexible metal duct. Duct shall be Flexmaster Type TL-V, or approved equal, constructed internally of aluminum metal flexible ducting, factory insulated with fiberglass blanket, and protected with a reinforced metalized outer jacket, with a fire retardant vapor barrier. Maximum thermal conductance shall be 0.23 or less. The aluminum duct shall be secured and sealed to the adjoining sheet metal duct using sheetmetal screws and duct sealant. All materials shall be installed as recommended by manufacturer. Flex duct shall be rated at a minimum of 12” w.g. positive, and 8” w.g. negative.

B. Flex duct runs are limited to 5 feet in length <u>unless noted otherwise on the drawings</u>. Minimum flex duct size is 8” nominal.

PART 3 - EXECUTION

3.1 INSTALLATION

A. Refer also to requirements included in Part 2 of this specification.

B. Locate ducts with sufficient space around equipment to allow normal operating and maintenance activities.

C. Joints in round ducts shall be crimp and bead type with a minimum of three sheet metal screws and no more than 15” between screws. Joints in sectional elbows shall be sealed as specified for duct sealing.

3.2 DUCT SUPPORTS

A. As a minimum, all horizontal ducts shall be supported by means of 1" x No. 18 U.S. gauge galvanized steel band hangers attached to the ducts by means of screws, rivets, or clamps and fastened to roof and/or ceiling structural members with toggle bolts, beam clamps or other approved means. **Supports SHALL NOT be attached to underside of roof deck.** Ducts also may be supported by threaded galvanized rod with galvanized Unistrut type channel in a trapeze configuration. Duct shall have at least one pair of supports at 6'-0" on centers, or a minimum of one for lengths greater than 4'-0". Clamps shall be used to fasten hangers to reinforcing on sealed ducts. Perforated strap material ("Plumber's Tape") shall not be used to support ducts. Brace all ductwork and equipment to prevent lateral movement under operation.

3.3 DUCT SEALING

A. All transverse and longitudinal seams, joints and duct penetrations shall be sealed. Sealant is to be non-hardening, latex based mastic, water resistant, fire resistive and compatible with mating materials. **SOLVENT BASED DUCT SEALANTS ARE PROHIBITED**. Ducts shall be sealed to SMACNA Seal Class "C" or better. Any obvious, detectable leakage in longitudinal seams shall also be sealed. Other recommendations for the installation of ducts and use of sealants are required as a minimum standard. These specifications shall prevail if they require a better quality installation.

3.4 TESTING

A. Leakage testing of the ductwork installed under this specification is not required. However Contractor shall perform minimal "testing" by examining all ductwork for leaks by listening and feeling the ductwork while in service, and examining the insulated ductwork for evidence of leaking such as "ballooning" of insulation.

3.5 CLEANING OF SYSTEMS

A. Prior to Substantial Completion, all ducts shall be cleaned of all dust and dirt, and construction debris, if any, that has collected in the ducts. This may include, and shall not be limited to, swabbing ductwork that has collected dirt and dust.

END OF SECTION

SECTION 15820
DUCTWORK ACCESSORIES

PART 1 - GENERAL

1.1 WORK INCLUDED

A. Air turning devices.

B. Volume control (balancing) and splitter dampers.

C. Flexible duct connections.

D. Fan screens.

E. Duct access doors.

F. Test openings.

G. Round, low pressure duct taps.

1.2 RELATED WORK

A. Section 15767 – Heat Pump Air Conditioning Systems.

1.3 REFERENCES

A. AFBMA 9 – Load Ratings and Fatigue Life for Ball Bearings

B. AFBMA 11 – Load Ratings and Fatigue Life for Roller Bearings

C. AMCA 99 – Standards Handbook

D. AMCA 210 – Laboratory Methods of Testing Fans for Rating Purposes

E. NFPA 90A – Installation of Air Conditioning and Ventilating Systems

F. NFPA 92A (National Fire Protection Association) – Smoke Control Systems

G. SMACNA – Low Pressure Duct Construction Standards

H. UL 33 (Underwriters Laboratories, Inc.) – Heat Responsive Links for Fire-Protection Service

I. UL 181 – Factory-Made Air Ducts and Connectors

J. UL 555 (Underwriters Laboratories, Inc.) – Fire Dampers and Ceiling Dampers

1.4 SUBMITTALS

A. Submit shop drawings and product data under provisions of Section 15050.

B. Provide shop drawings for shop fabricated assemblies indicated, including volume control dampers duct access doors duct test holes. Provide product data for hardware used.

C. Product Data: Submittal data shall include the following:
1. Air turning devices.
2. Volume control (balancing) dampers.
3. Flexible duct connections.
4. Duct access doors.
5. Flexible connections.

6. Test openings.
7. Round, low pressure duct taps.
8. Manufacturer's Installation Instructions.

1.5 OPERATION AND MAINTENANCE DATA

A. Submit under provisions of Section 15050.

B. Maintenance Data: Include instructions for lubrication, motor and drive replacement, spare parts list, and wiring diagrams.

1.6 DELIVERY, STORAGE, AND HANDLING

A. Deliver, store, protect and handle products to site under provisions of Section 15050.

B. Protect motors, shafts, and bearings from weather and construction dust.

PART 2 - PRODUCTS

2.1 AIR TURNING DEVICES

A. Manufacturers:
1. Aero Dyne
2. Anemostat
3. Barber-Coleman
4. Hart & Cooley
5. Or approved equal

B. Construct turning vanes and runners for rectangular elbows in accordance with SMACNA HVAC Duct Construction Standards, Fig. 2-3, with no trailing edge. Turning vanes shall be single wall, constructed of 24 gage sheet metal, shall be 2” radius, and shall be spaced 1 ½” on center. Turning vanes shall be installed per Figure 2-4, in the same Standard. Note that all rectangular 90° turns shall not change dimension in the turn, so turning vanes shall be constructed and installed for symmetrical 90° turns.

2.2 VOLUME CONTROL (BALANCING) AND SPLITTER DAMPERS

A. Furnish and install dampers where shown on the Drawings and wherever necessary for complete control of the air flow, including all supply, return and exhaust branches, "division" in main supply, return and exhaust ducts, each individual air supply outlet and fresh air ducts. Where access to dampers through a fixed suspended ceiling is necessary, the Contractor shall be responsible for the proper location of access doors.

B. Splitter dampers shall be fabricated of steel not lighter than 16 gauge. The leading edge of the damper shall be hemmed. Each splitter shall be a minimum of 12" long or 1-1/2 times the width of the smaller of the two branches it controls, whichever is greater. Dampers shall be carefully fitted, and shall be controlled by locking quadrants equal to Ventlok (Ventfabrics Corporation) No. 555 on exposed uninsulated ductwork, No. 641 on exposed externally insulated ductwork and No. 677 (2-5/8" diameter) chromium plated cover plate for concealed ductwork not above lay-in accessible ceilings. Furnish and install end bearings for the damper rods on the end opposite the quadrant when No. 555 or No. 641 regulators are used, and on both ends when No. 677 regulators are used.

C. On concealed ductwork above lay-in accessible ceilings use Ventlok No. 555 or No. 641 locking quadrant for splitter dampers.

D. Dampers larger than three (3) square feet in area shall be controlled by means of rods hinged near the leading edge of the damper with provisions for firmly anchoring the rod and with end bearings supporting the axle.

E. Volume dampers shall be equal to Ruskin MD15/MDRS25 or Greenheck MBD/MBDR. Dampers shall be premanufactured and assembled, not shop fabricated. Blades shall not exceed 48 inches (48") in length or twelve inches (12") in width and shall be of the opposed interlocking type. The blades shall be of not less than No. 16 gauge galvanized steel supported on one-half inch (1/2") diameter rust-proofed axles. Axle bearings shall be the self-lubricating ferrule type.

F. All adjustable dampers installed in externally insulated ductwork shall be installed with Ventlok No. 639, or equal, elevated dial operators. Insulation shall extend under the elevated dial and shall be sealed in place. All adjustable dampers installed in internally insulated ductwork shall be installed with Ventlok No. 635, or equal, dial operators. All damper shaft end penetrations in the ductwork shall be installed with Ventlok #607 end bearings.

2.3 FLEXIBLE DUCT CONNECTIONS

A. Where ducts connect to fans, including roof exhausters, flexible connections shall be made using "Ventglas" fabric that is fire-resistant, waterproof, mildew resistant and practically air tight, and shall weigh approximately thirty ounces (30 oz.) per square yard. There shall be a minimum of one-half inch (1/2") slack in the connections, and a minimum of two and one-half inches (2½") distance between the edges of the ducts except that there shall also be a minimum of one inch (1") of slack for each inch of static pressure on the fan system. This does not apply to Air Handling Units with internal isolation.

2.4 FAN SCREENS

A. Furnish and install screens on all duct, fan, etc., openings furnished by this Contractor which lead to, or are, outdoors. Screens shall be No. 16 gauge, one-half inch (1/2") mesh in a removable galvanized steel frame. Provide safety screens meeting OSHA requirements for protection of maintenance personnel on all fan inlets and fan outlets to which no ductwork is connected.

2.5 TEST OPENINGS

A. Furnish and install in the return air duct and in the discharge duct of each fan unit Ventlok No. 699 instrument test holes. The test holes shall be installed in locations as required to measure pressure drops across each item in the system, e.g., OA louvers, filters, fans, coils, intermediate points in duct runs, etc.

2.6 ROUND, LOW PRESSURE TAPS (Conical Bell Mouth Fittings)

A. Conical fittings may be used for duct taps and shall include quadrant dampers on all lines to air devices (diffusers and grilles) even though a volume damper is specified for the air device. (This does not apply to medium pressure duct.) Spin-in fittings shall be sealed at the duct tap with a gasket, or compression fit, or sealed with sealant specified for medium pressure ductwork. The location of spin-in fittings in the ducts shall be determined after dual or single

duct terminal units are hung or the location of the light fixtures is known so as to minimize flexible duct lengths and sharp bends.

B. The conical fitting shall be made of at least 26 gage galvanized sheet metal. The construction to be a two-piece fitting with a minimum overall length of 6 inches and shall be factory sealed for high pressure requirements. Average loss coefficient for sizes 6, 8, and 10 shall be less than 0.055.

C. Each shall be provided with minimum 24 gage damper plate with locking quadrant operator and sealed end bearings. Damper blade shall be securely attached to shaft to prevent damper from rotating around shaft.

D. Provide flange and gasket with adhesive peel-back paper for ease of application. The fitting shall be further secured by sheet metal screws spaced evenly at no more than 4 inches on-center with a minimum of four screws per fitting.

E. The conical bellmouth fitting shall be Series 3000G as manufactured by Flexmaster U.S.A., Inc., Buckley Air Products, Inc., 'AIR-TITE', or approved equal.

PART 3 - EXECUTION

3.1 EXAMINATION

A. Verify ducts and equipment installations are ready for accessories.

3.2 INSTALLATION

A. Install turning vanes in all rectangular, mitered elbows in accordance with SMACNA standards and/or manufacturer's recommendations.

B. Install equipment and accessories in accordance with manufacturer's instructions.

C. Provide volume balancing dampers at points on low pressure supply, return, and exhaust systems where branches are taken from larger ducts as required for air balancing. Use splitter dampers only where indicated.

D. Provide duct test holes where indicated and where required for testing and balancing purposes. Refer also to Section 15950.

END OF SECTION

SECTION 15830
FANS

PART 1 - GENERAL

1.1 SECTION INCLUDES:

A. Ceiling exhaust fans

B. Inline cabinet exhaust fans

C. Wall and roof mounted centrifugal exhaust fans

1.2 RELATED WORK

A. Section 15050 - Basic Mechanical Requirements

B. S Section 15767 - Heat Pump Air Conditioning Systems(ductwork)

C. Section 15820 - Ductwork Accessories

D. Division 16 - Electrical

1.3 REFERENCES

A. AFBMA 9 – Load Ratings and Fatigue Life for Ball Bearings

B. AFMBA 11 – Load Ratings and Fatigue Life for Roller Bearings

C. AMCA 99 - Standards Handbook

D. AMCA 210 - Laboratory Methods of Testing Fans for Rating Purposes

E. AMCA 261 - Directory of Products Licensed to Bear the AMCA Certified Ratings Seal

F. AMCA 300 - Test Code for Sound Rating Air Moving Devices

G. AMCA 301 - Method of Publishing Sound Ratings for Air Moving Devices

H. NFPA 70 - National Electrical Code

I. NFPA 96 - Installation of Equipment for the Removal of Smoke and Grease Vapors from Commercial Cooking Equipment

J. SMACNA – HVAC Duct Construction Standards – Metal and Flexible

K. UL 705 - Power Ventilators

1.4 SUBMITTALS

A. Submit under provisions of the Uniform General Conditions, Special Conditions and Section 15050.

B. Product Data: Provide data on fans and accessories including sound power levels at rated capacity, and electrical characteristics and connection requirements.

C. Manufacturer's Installation Instructions.

1.5 OPERATION AND MAINTENANCE DATA

A. Submit under provisions of the Uniform General Conditions, Special Conditions and Section 15050.

B. Maintenance Data: Include instructions for lubrication, motor and drive replacement, spare parts list, and wiring diagrams.

1.6 DELIVERY, STORAGE, AND HANDLING

A. Deliver, store, protect and handle products to site under provisions of the Uniform General Conditions, Special Conditions and Section 15050.

B. Protect motors, shafts, and bearings from weather and construction dust.

PART 2 - PRODUCTS

2.1 MANUFACTURERS

A. Ceiling Mounted Fans and Systems:
1. Dayton
2. Broan
3. Car-Mon
4. Cook
5. Greenheck
6. Approved equal of capacities and types as scheduled.
7. Equivalent fans selections shall not increase motor horsepower (amperage), or increase noise level from that specified.

B. Inline Cabinet Fans:
1. Greenheck.
2. Chicago Blower.
3. Acme.
4. Cook.
5. or approved equal.

C. Wall and Roof Mounted Centrifugal Exhaust Fans:
1. Greenheck
2. Chicago Blower
3. Buffalo Forge
4. Woods
5. Cook
6. Approved equal.

2.2 CEILING MOUNTED EXHAUST FANS:

A. Direct drive centrifugal forward curved wheel in steel housing.

B. Resiliently mounted lifetime lubricated plug-in motor.

C. Matte white polymeric grille with torsion spring mounting.

D. Polymeric duct connection collar and backdraft shutter.

E. Provide optional wall cap where indicated on drawings.

F. Provide disconnect switch option for all fans and motor overload option for all fractional horsepower fans.

2.3 INLINE CABINET FANS:

A. Performance Ratings: Conform to AMCA 210 and/or bear the AMCA Certified Rating Seal.

B. Fabrication: Corrosion resistant galvanized steel housing, lined with 1/2" sound absorbing fiberglass insulation. Outlet duct shall be complete with integral aluminum backdraft damper. Fan shall be configured for horizontal inlet and outlet connections.

C. Static and Dynamic Balance: Eliminate vibration or noise transmission to occupied areas.

D. Fan shall be forward curved, direct drive inline cabinet fan, conforming to the scheduled capacity requirements.

E. Motors shall have automatic reset thermal overload protection, and shall be mounted on vibration isolators. Motor shall be compatible for use with speed controls.

F. Cover shall be easily removable for access to motor.

G. Accessories: Provide factory installed disconnecting means.

2.4 WALL AND ROOF MOUNTED CENTRIFUGAL EXHAUST FANS

A. General:

1. All fans shall be backward inclined, or airfoil type. Radial and forward inclined fans are not acceptable.
2. Performance Ratings: Conform to AMCA 210 and bear the AMCA Certified Rating Seal.
3. Sound Ratings: AMCA 301, tested to AMCA 300, and bear AMCA Certified Sound Rating Seal.
4. Fabrication: Conform to AMCA 99.
5. Performance Base: 1000 feet above sea level conditions.
6. Temperature Limit: Maximum 600°F (unless noted otherwise).
7. Static and Dynamic Balance: Eliminate vibration or noise transmission to occupied areas.
8. Grease lubricated and sealed bearings shall be selected for a minimum average life in excess of B-10, minimum life 50,000 hours at maximum catalogued operating conditions. Grease fittings shall be accessible without the disassembly of any part of the fan, or the removal of panels or shrouds. In the event that a grease fitting is inherently inaccessible, the fitting shall be extended to an accessible location using stainless steel tubing. The tubing shall contain at least one full strain relief loop of a minimum diameter of 4 inches.
9. Capacity ratings shall be based on tests performed in accordance with AMCA Standard 210. Each fan shall carry near the unit nameplate the AMCA seal indicating that capacity ratings are certified.
10. Housings for all fans shall be spun aluminum and shall have a mounting ring or frame to provide for mounting of fan.
11. Fan wheels shall be aluminum, non-overloading, centrifugal, backward-inclined or airfoil, with aluminum rub ring.
12. Accessories shall include a gravity backdraft damper, and ¼" mesh screen. Damper shall be installed on damper trays so as to not have their operation obstructed by the fan.

B. Wall mounted centrifugal exhaust fans.

1. All surfaces exposed to airflow shall have a Heresite or baked phenolic coating.

2. Fan shall have an explosion proof or intrinsically safe, disconnect switch and vibration isolation for entire motor and drive assembly. Motor shall be explosion proof or TEFC, 115 VAC, 60 cycle, single phase, with thermal overloads, unless specifically stated otherwise in equipment schedule in drawings.

PART 3 - EXECUTION

3.1 INSTALLATION

A. Install in accordance with manufacturer's instructions.

B. Do not operate fans for any purpose until ductwork is clean, filters in place, bearings lubricated, and fan has been test run under observation.

C. Install exhaust fans and their attendant ductwork at locations indicated on drawings. Refer to Architectural plans for additional requirements.

D. Fans shall be operated as indicated on drawings. Refer to Electrical Plans and Specifications.

END OF SECTION

SECTION 15850
AIR OUTLETS AND INLETS

PART 1 - GENERAL

1.1 WORK INCLUDED

A. Diffusers

B. Registers/Grilles

1.2 RELATED WORK

A. Section 15050 – Basic Mechanical Requirements

B. Section 15097 – Ductwork Insulation

C. Section 15767 – Heat Pump Air Conditioning Systems

D. Section 15810 – Ductwork

E. Section 15820 – Ductwork Accessories

1.3 REFERENCES

A. ADC 1062 – Certification, Rating and Test Manual

B. AMCA 500 – Test Method for Louvers, Dampers and Shutters

C. ANSI/NFPA 90A – Installation of Air Conditioning and Ventilating Systems

D. ARI 650 – Air Outlets and Inlets

E. ASHRAE 70 – Method of Testing for Rating the Air Flow Performance of Outlets and Inlets

F. SMACNA – Low Pressure Duct Construction Standard

G. Uniform Mechanical Code, latest edition

1.4 QUALITY ASSURANCE

A. Test and rate performance of air outlets and inlets in accordance with ADC Equipment Test Code 1062 and ASHRAE 70.

B. Test and rate performance of louvers in accordance with AMCA 500.

1.5 REGULATORY REQUIREMENTS

A. Conform to ANSI/NFPA 90A and UMC.

1.6 SUBMITTALS

A. Submit product data and manufacturers installation instructions for all diffusers, grilles and registers under provisions of Uniform General Conditions, Special Conditions, and Section 15050.

B. Provide product data for items required for this project.

C. Submit schedule of outlets and inlets indicating type, size, location, application, and noise level.

D. Review requirements of outlets and inlets as to size, finish, and type of mounting prior to submitting product data and schedules of outlets and inlets.

PART 2 - PRODUCTS

2.1 AIR SUPPLIES AND RETURNS

A. Grilles, registers and ceiling outlets shall be as scheduled on the Drawings and shall be provided with sponge rubber or soft felt gaskets. If a manufacturer other than the one scheduled is used, the sizes shown on the Drawings shall be checked for performance, noise level, face velocity, throw, pressure drop, etc., before the submittal is made. Selections shall meet the manufacturer's own published data for the above performance criteria. The throw shall be such that the velocity at the end of the throw in the five foot occupancy zone will be not more than 50 FPM nor less than 25 FPM. Noise levels shall not exceed those published in the ASHRAE Guide for the type of space being served (NC level).

B. Locations of outlets on Drawings are approximate and shall be coordinated with other trades to make symmetrical patterns and shall be governed by the established pattern of the lighting fixtures or architectural reflected ceiling plan. Where called for on the schedules, the grilles, registers and ceiling outlets shall be provided with deflecting devices and manual damper. These shall be the standard product of the manufacturer, subject to review by the Architect, and equal to brand scheduled.

2.2 ACCEPTABLE MANUFACTURERS - DIFFUSERS, GRILLES AND REGISTERS

A. Price

B. Metal*Aire

C. Titus

D. Krueger

E. Or approved equal.

2.3 RECTANGULAR CEILING DIFFUSERS

A. Rectangular, extruded aluminum, all aluminum construction, multicore type diffuser to discharge air in either a four-way, 360 degree pattern, or a 3-way, 270 degree pattern with sectorizing baffles where indicated. Refer to schedule in construction drawings.

B. Provide inverted T-bar type installation frame, or in plaster ceilings, provide plaster frame and ceiling frame, as indicated in the diffuser schedule in the drawings.

C. Fabricate of aluminum with standard baked enamel off-white finish.

2.4 RECTANGULAR AIR RETURN GRILLE

A. Rectangular, aluminum, “egg-crate” design, for return of air to air handler. Refer to equipment schedule in drawings.

B. Fabricate with manufacturer’s standard finish.

PART 3 - EXECUTION

3.1 INSTALLATION

A. Install items in accordance with manufacturers' instructions.

B. Check location of outlets and inlets and make necessary adjustments in position to conform to architectural features, symmetry, and lighting arrangement.

C. Provide back draft dampers on gravity relief vent as specified.

D. Install diffusers to ductwork with air tight connection. Refer to equipment specifications.

E. Provide balancing dampers on duct take-off to diffusers, and grilles and registers, regardless of whether dampers are specified as part of the diffuser, or grille and register assembly.

F. Paint ductwork visible behind air outlets and inlets matte black.

G. All air supply devices shall be insulated on their topsides with blanket type insulation equal to the insulation used for insulating ductwork. See specifications for ductwork insulation.

END OF SECTION

SECTION 15950
TESTING, ADJUSTING, AND BALANCING

PART 1 - GENERAL

1.1 SECTION INCLUDES

A. Testing, adjustment, and balancing of air systems.

B. Measurement of final operating condition of HVAC systems

C. Sound measurement of equipment operating conditions

D. Vibration measurement of equipment operating conditions

1.2 RELATED SECTIONS

A. Section 15050 - Basic Mechanical Requirements

B. Section 15767 - Heat Pump Air Conditioning Systems

C. Section 15810 – Ductwork

D. Section 15820 - Ductwork Accessories

E. Section 15850 - Air Outlets and Inlets

1.3 REFERENCES

A. AABC - National Standards for Field Measurement and Instrumentation, Total System Balance

B. ASHRAE - Systems Handbook: Testing, Adjusting and Balancing

C. NEBB - Procedural Standards for Testing, Balancing and Adjusting of Environmental Systems

1.4 CONTRACTOR SCOPE OF WORK

A. Testing, adjusting, and balancing (TAB) of the air conditioning systems and related ancillary equipment shall be performed by an impartial, technically qualified TAB firm, with no connection to the Contractor or any Subcontractor, except for a contract to perform the work described herein. The preparation for, and corrections necessary for the Testing, Adjusting and Balancing of these systems, as described herein, are the responsibility of the Contractor.

B. As a part of this Construction Contract, the Contractor shall provide for a maximum of two changes or replacements to the sheaves, belts, dampers, valves, etc. required for correct air balance as advised by the TAB firm, at no additional cost to the Owner.

C. The Contractor shall provide and coordinate the services of qualified, responsible Subcontractors, suppliers and personnel as required to correct, repair, and/or replace any and all deficient items or conditions found during the course of this project, including the testing, adjusting and balancing period.

D. In order that all systems may be properly tested, balanced, and adjusted as specified herein, the Contractor shall operate said systems at his expense for the length of time necessary to properly verify their completion and readiness for TAB. This length of time shall be subject to the approval of the Construction Inspector.

E. Project Contract completion schedules shall allow for sufficient time to permit the completion of

TAB services prior to Owner occupancy. The contractor shall allow no less than three weeks for the testing and balancing activities of the owner provided services, during the construction period, and prior to Substantial Completion as defined in the Uniform General Conditions of this Construction Document. Note that this period may be concurrent with other construction activities which shall not conflict with the TAB of the systems described herein.

F. The Drawings and Specifications indicate valves, dampers, and miscellaneous adjustment devices for the purpose of adjustment to obtain optimum operating conditions, and it will be the responsibility of the Contractor to install these devices in a manner that will leave them accessible and readily adjustable. Should any such device not be readily accessible, the Contractor shall provide access as required for successful completion of the TAB. Also, any malfunction encountered by TAB personnel and reported to the Contractor or the Construction Inspector shall be corrected by the Contractor immediately.

1.5 RESPONSIBILITIES OF THE PROJECT CONTRACTOR

A. The Contractor shall:
   1. Have the building and air conditioning systems in complete operational readiness prior to the beginning of TAB work.
   2. Allow sufficient time for the TAB firm to perform the contracted TAB work within the construction schedule.
   3. Promptly correct deficiencies of materials and workmanship identified as delaying completion of TAB work.

B. Complete operational readiness of the building requires that construction status of the building shall permit the closing of doors, windows, ceilings installed, etc., to obtain simulated or projected operating conditions.

C. Complete operational readiness of the air conditioning systems also requires that the following be accomplished:
   1. Air Distribution Systems:
      a) Verify installation for conformity to design. All supply, return and exhaust ducts terminated and pressure tested for leakage as required by the Specifications.
      b) All control dampers, and volume balancing dampers, shall be properly installed and functional. Dampers serving requirements of minimum and maximum outside, return and relief air shall provide tight closure and full opening, smooth and free operation.
      c) All supply, return, and exhaust grilles, registers, diffusers shall be installed and operating properly.
      d) Air handling systems, units and associated apparatus, such as heating and cooling coils, filter sections, access doors, etc., shall be sealed as specified in the equipment specifications to eliminate excessive bypass or leakage of air.
      e) All fans (supply, return and exhaust) included in the project shall be operating and verified for freedom from vibration, proper fan rotation and belt tension; heater elements in motor starters of proper size and rating; record motor amperage and voltage on each phase at startup and running, and verify they do not exceed nameplate ratings.
   2. Automatic Controls:
      a) Verify that all control components are installed in accordance with project requirements and are functional, including all electrical interlocks, damper sequences, air resets, fire and freeze stats, high and low temperature thermostats, and duct mounted smoke detectors.

b) All controlling instruments shall be calibrated and set for designed operating conditions.

3. Tabulated Data:
   a) The motor amperages and voltages for the air handler fans indicated above shall be recorded showing "actual" and "nameplate" voltage and amperage. This also applies to each piece of electrically driven air conditioning equipment in the system including exhaust fans and other fans of fractional horsepower.

1.6 REQUISITES OF THE TAB FIRM

A. The Firm shall be neither attached to, nor affiliated with, except by contract, any other Contractor or Subcontractor associated with this project.

B. The Firm shall be one which is organized to provide professional services of this specified type in the State of Texas and as a minimum shall have a minimum of one (1) professional engineer licensed in the State of Texas, with current registration, to perform such professional services. This engineer shall be personally responsible for developing the job site data as required in the test procedures outlined in these Specifications. Further, the engineer shall be on site during the collection of data and shall personally supervise all TAB technicians during balancing operations.

C. The principals of the firm, and the persons performing the TAB, shall be either NEBB or AABC certified.

D. The Firm shall have operated a minimum of five years under its current Firm name, and shall be in good standing with the State of Texas, Franchise Tax Board.

E. The Firm shall be capable of performing the services specified at the location of the facility described within the time specified, preparing and submitting the detailed report of the actual field work performed, and following up the basic work as may be required.

F. All personnel working on the job site shall be either professional engineers or engineering technicians, who shall have been permanent, full time employees of the firm for a minimum of six (6) months prior to the start of work for this specific project.

G. **The TAB Firm shall submit biographical data on the individual proposed to directly supervise the TAB work, as well as other personnel scheduled to perform the technical work under the contract.** It shall also submit a background record of at least five years of specialized experience in the field of air system balancing, and shall possess properly calibrated instrumentation. The supervisory personnel for the TAB firm shall be registered engineers in the mechanical field and all of the employees used in the TAB firm shall be permanent, full-time employees of the firm.

1.7 DOCUMENTS

A. The TAB firm shall, as a requirement of the TAB contract, arrange with the Contractor to compile one set of mechanical specifications, all pertinent change orders, and the following:
   1. One complete set of Drawings.
   2. One set of mechanical floor plans of the conditioned spaces. These Drawings shall be ozalid type (blue or black on light background) reproductions to facilitate marking.
   3. Approved submittal data on equipment installed, and related changes as required to accomplish the test procedures outlined in the following specifications.

1.8 RESPONSIBILITIES OF THE TAB FIRM

A. Check, adjust, and balance the components of the air conditioning system which will result in optimal noise, temperature, and airflow conditions in the conditioned spaces of the building while the equipment of the system is operating economically. This is intended to be accomplished after the system components are installed and operating as provided for in the contract documents. It is the responsibility of the Mechanical Contractor to place the equipment into service.

B. Liaison and Early Inspection:
   1. Inspect the installation of mechanical piping systems, sheet metal work, temperature controls and other component parts of the heating, air conditioning and ventilating systems during the construction stage for the proper arrangement and adequate provisions of the systems for ease of testing and balancing.
   2. After completing this review during the construction stage, the TAB Firm shall provide the Construction Inspector with a list of sequential steps that TAB will follow in performing the balancing operation. (It is not intended that this procedural schedule be as detailed as the "Basic Procedures" outlined in the AABC Standards Manual, for example.) A list of the significant operations that will be performed in the balancing process shall be provided. The purpose is to provide the Owner with an outline of the steps that the TAB Firm will follow so that he may be aware of the progress being made. It is understood that, as the balancing progresses, the TAB Firm may find it necessary to deviate from the scope and order in which the steps are listed; however, in general it will be expected that the TAB Firm will follow the provided schedule.

C. During the balancing process, as abnormalities and malfunctions of equipment or components are discovered by the TAB personnel, the Construction Inspector shall be advised in writing so that the condition can be corrected by the Construction Contractor. The written document need not be formal, but must be understandable and legible. If corrected prior to the completion of the TAB, data from malfunctioning equipment shall not be reported in the final TAB report. If not corrected, then the TAB report shall be annotated with all abnormalities listed clearly.

D. The TAB Report:
   1. The activities described in this section shall culminate in a report to be provided in triplicate to the Owner or his designated representative. The intent of the final report is to provide a reference of actual operating conditions for the Owner's operating personnel.
   2. All measurements and recorded readings (of air, water, electricity, etc.) that appear in the reports shall have been made onsite by the permanently employed technicians or engineers of the firm.
   3. At the option of the Construction Inspector, all data sheets tabulated each day by TAB personnel shall be submitted for initial by the Construction Inspector. Those work sheets so initialed, or copies thereof, shall be presented as a supplement to the final TAB report.
   4. The report shall be certified and approved by the previously described professional engineer of the firm and an original signed and dated seal shall appear on the first page of each copy, in compliance with the Texas Engineers Practice Act. The report shall be recorded on standard forms approved by the Owner.

   5. The TAB Report shall include the following as a minimum:
      a) PREFACE: A general discussion of the system, any idiosyncrasies, and any problems encountered, an outline of normal ventilation cycles of operation, and any noise problem

not corrected.

b) PITOT TUBE TRAVERSES: For use in future troubleshooting by maintenance personnel, all exhaust ducts, main supply ducts, fume hoods and return ducts shall have air velocity and volume measured and recorded by the traverse method. Locations of these traverse test stations shall be described on the sheet containing the data.

c) TEMPERATURE TABULATION: Temperatures shall be recorded for each conditioned space on a room-by-room basis. Record outside ambient temperature at two hour intervals. The total variation in conditioned space temperatures shall not exceed 2 degrees variance from the thermostat settings.

d) AIR VOLUMES & VELOCITIES: Air volumes and velocities shall be measured at each supply grille, return air grille, and exhaust air grille or air handling device. In all fan systems, the air quantities indicated on the plans may be varied as required to provide a maximum temperature variation of two (2) degrees within each separately controlled space, but the total air quantity indicated for each zone must be obtained. It shall be the obligation of the Contractor to furnish or revise fan drive and/or motors if necessary, without cost to the Owner, to attain the specified air volumes.

e) STATIC PRESSURE DROPS: Static pressure gains or losses shall be measured across each supply fan, cooling coil, heating coil, return air fan, air handling unit filter and exhaust fan. These readings shall be graphically compared to the specific fan curve.

f) STATIC PRESSURES: Static pressures shall be measured and recorded for this report at the furthest air device (e.g. terminal unit) from the air handler supplying that device.

g) FAN SPEEDS: The operating speed of each fan shall be measured in RPM.

h) DRAWINGS: The Drawings mentioned above under "Documents" shall have each set of zone dampers and supply air openings numbered and/or lettered to correspond to the numbers and letters used on the report data sheets so that data in the report can be correlated with each specific supply air opening in the building. If room numbers actually used in the building differ from those on the plans, the building room numbers shall be marked on these Drawings. Only one such marked-up set of Drawings need be provided with the three copies of the TAB report.

6. Before final acceptance of the TAB report, the report data, at the discretion of the Owner, shall be verified and demonstrated one time on the job site by the TAB firm in the presence of the Architect's, Engineer's and the Owner's representatives. Representatives of the testing firm doing the work shall be present and provide the necessary equipment for test data verification. The Owner shall notify the Contractor of the acceptance of the report after clarification of any questions on the data recorded therein. This acceptance will terminate all bond and insurance requirements of TAB firm. Final acceptance of the report will culminate in the payment of the full amount of the TAB contract.

7. In order to permit the Construction Contractor time to work off TAB deficiency lists, the air balance firm shall provide for additional progress inspection visits to the project site from the start of balancing operations until completion.

8. The firm shall be responsible for inspecting, adjusting, balancing, and logging the data on the performance of all fans, all dampers in the duct system, all air distribution devices, the flows of steam or water through all coils, and the power consumption of all motors. The Contractor, Mechanical Contractor, the various Subcontractors involved, and the Suppliers of the equipment installed shall all cooperate with balancing firm to provide all necessary data on the design and proper application of the systemic components and shall furnish all labor and material required to eliminate any deficiency in performance.

9. During the TAB work, the temperature regulation shall be adjusted for proper relationship between controlling instruments. The Owner (Inspector) shall be advised of any instruments out of calibration so that the Controls Contractor may recalibrate the equipment,

using data supplied by the balancing firm. After recalibration, room temperatures shall be measured again as described in "Temperature Tabulation" paragraph.

10. An additional inspection is required approximately ninety (90) days after occupancy of the building. The TAB firm shall insure that satisfactory performance is being maintained throughout and satisfy any unusual conditions.

11. An additional inspection in the building shall be made by the Firm during the season opposite that in which the initial adjustments were made (summer or winter). At that time any necessary modifications to the initial adjustment required to produce optimum operation of the system components shall be made to produce the proper seasonal conditions in each conditioned space. At the time of opposite season checkout, the Owner's Construction Inspector or Facility Superintendent, or both, shall be given timely notification before any readings or adjustments are made so that they may participate in the checkout.

PART 2 - PRODUCTS

NOT USED

PART 3 - EXECUTION

NOT USED

END OF SECTION

SECTION 16010
BASIC ELECTRICAL REQUIREMENTS

PART 1 - GENERAL

1.1 RELATED SECTIONS

A. Section 15050 – Basic Mechanical Requirements

B. Section 15920 – HVAC Control Wiring

1.2 WORK INCLUDED

A. The contractor shall install, complete and operating, electrical systems consisting of the following :
   1. Complete distribution for power and lighting as shown on plans, including switches and circuit breakers, feeders, sub feeders, grounding, switchboards, transformers, panelboards, branch circuits, line voltage control wiring, switches and receptacles and all other equipment shown on drawings.
   2. Contractor shall make all final connections to equipment furnished by other trades.
   3. Contractor shall make all connections to all motors, electrically operated equipment and line voltage controls.
   4. All conduits, sleeves and support systems required for all systems and all cable trays.
   5. Temporary electrical power and lighting shall be furnished, installed and maintained for all trades. Building lighting may be used as construction lighting only after it is permanently installed.
   6. Miscellaneous items obviously required for a complete and operating system but not specifically called for on the drawings or in the specifications shall be provided by the Contractor at no extra cost to the Owner (nuts and bolts, masonry anchors, conduit and equipment supports, drilling welding, scaffolding, crane service, etc.).

1.3 REFERENCES, STANDARDS, AND REGULATORY REQUIREMENTS:

The following state and local codes, ordinances, and industry standards shall be complied with on this project as applicable.

A. The "Authority Having Jurisdiction" over the project described by these documents is the Owner, Texas Department of Transportation, as an Agency of the State of Texas. As such, it is required that the installation shall meet the minimum standards prescribed in the latest editions of the following listed codes and standards, which are made a part of these Specifications.

B. American National Standards Institute (ANSI): All current editions of applicable manuals and standards.

C. Underwriters' Laboratories (UL)

D. Insulated Cable Engineers Association (ICEA)

E. Institute of Electrical and Electronic Engineers (IEEE)

F. American Society of Testing Materials (ASTM): All current editions of applicable manuals and standards.

G. National Fire Protection Association Standards (NFPA):
   1. NFPA No. 70, National Electrical Code
   2. NFPA No. 72A, Local Protective Signaling Systems
   3. NFPA No. 72E, Automatic Fire Detectors
   4. NFPA No. 90A, Air Conditioning Systems
   5. NFPA No. 91, Blower & Exhaust Systems

6. NFPA No. 101, Life Safety Code
7. NFPA No. 241, Standard for Safeguarding Construction, Alteration and Demolition Operations
8. NFPA No. 255, Method of Test of Surface Burning Characteristics of Building Materials
9. NFPA No. 258, Standard Research Test Method for Determining Smoke Generation of Solid Materials

H. National Electrical Manufacturers' Association (NEMA): All current editions of applicable manuals and standards.

I. Local Fire Department and the State Fire Marshall, as may be applicable to construction on this site.

J. Occupational Safety and Health Act (OSHA): All applicable safety standards.

K. Texas Occupational Safety Act: All applicable safety standards.

L. International Building Code, latest edition.

M. Refer to Specification Sections hereinafter bound for additional Codes and Standards.

N. All materials and workmanship shall comply with all applicable state and national codes, Specifications, and industry standards. In all cases where Underwriters' Laboratories, Inc. has established standards for a particular type material, such material shall comply with these standards. Evidence of compliance shall be the UL "label" or "listing" under Re-Examination Service.

1.4 GENERAL MATERIALS AND EQUIPMENT REQUIREMENTS:

A. **Note that no asbestos-bearing, or solvent based, or lead containing materials shall be used on this project. If any prohibited materials are installed, all of the material, including the underlying material, shall be removed and disposed of as required by local, state, and federal requirements.**

B. The Contractor shall be responsible for fitting the material and apparatus specified in this division into the building and shall carefully lay out the specified work at the site to conform with the structural conditions, to avoid all obstructions, to conform to the details of the installation and thereby to provide an integrated installation operating as a complete set of systems.

C. Verification of Dimensions: The Contractor shall be responsible for the coordination and proper relation of his work to the building structure and to the work of all trades. The Contractor shall visit the premises and become thoroughly familiarize with all details of the work and working conditions, to verify all dimensions in the field, and to advise the Engineer of any discrepancy before performing any work. Adjustments to the work required in order to facilitate a coordinated installation shall be made at no additional cost to the Owner or the Engineer.

D. The Electrical Drawings are necessarily diagrammatic by their nature, and are not intended to show every connection in detail or every pipe or conduit in its exact location. These details are subject to the requirements of standards referenced elsewhere in these specifications, and structural and architectural conditions. The Contractor shall carefully investigate structural and finish conditions and shall coordinate the separate trades in order to avoid interference between the various phases of work. Work shall be organized and laid out so that it will be concealed in furred chases and suspended ceilings, etc., in finished portions of the building, unless specifically noted to be exposed. All work shall be installed parallel or perpendicular to the lines of the building unless noted otherwise.

E. When the Drawings do not give exact details as to the elevation of conduit and cable trays, the Contractor shall physically arrange the systems to fit in the space available at the elevations intended with proper clearances. Exposed conduit and the cable tray systems are generally intended to be installed true and square to the building construction, and located as high as possible against the structure in a neat and

workmanlike manner. The Drawings do not show all required offsets, and other location details. Work shall be concealed in all finished areas.

F. Storage at Site: The Contractor shall not receive material or equipment at the job site until there is suitable space provided to properly protect equipment from rust, drip, humidity, and dust damage.

G. Capacities shall be not less than those indicated but shall be such that no component or system becomes inoperative or is damaged because of startup or other overload conditions.

H. Conformance with Agency Requirements: Where materials or equipment are specified to be approved, listed, tested, or labeled by the Underwriters' Laboratories, Inc. (UL), the Contractor shall submit proof that the items furnished under this Section of the Specifications conform to such requirements. The label of the Underwriters Laboratories, Inc., applied to the item will be acceptable as sufficient evidence that the items conform to such requirements.

I. Nameplates: Each major component of equipment shall have the manufacturer's name, address, and catalog number on a plate securely attached to the item of equipment. All data on nameplates shall be legible at the time of Final Inspection. Under no circumstances shall any nameplate be painted over for any reason. If a new or existing nameplate is painted over, the nameplate shall be restored to as new condition, or replaced with a new nameplate provided by the manufacturer.

J. Prevention of Rust: Standard factory finish will be acceptable on equipment specified by model number; otherwise, surfaces of ferrous metal shall be given a rust inhibiting coating. Where steel is specified to be hot-dip galvanized, mill-galvanized sheet steel may be used provided all raw edges are painted with a zinc-pigmented paint conforming to Military Specification MIL-P-26915.

1.5 DEFINITIONS: (Note: These definitions are included here to clarify the direction and intention of this specification. The list given here is not by any means complete. For further clarification as required, contractor shall contact the designated owner's representative.)

A. ARCHITECT (or DESIGN ARCHITECT): The "Architect" or "Design Architect" is defined as the architect whose seal appears on the construction specifications title page and on the drawings for the particular area under consideration.

B. AUTHORITY HAVING JURISDICTION: The Texas Department of Transportation, as an agency of the State of Texas is the "Authority Having Jurisdiction" in any matter of code assignment, interpretation, etc., as applies to this project. In many cases, at the Owners option, the Authority Having Jurisdiction may choose to apply the policies and procedures of an Authority not having jurisdiction, and as such, delegate its authority over some issues. In the event that some of its authority has been delegated to another Authority, such delegation will be specifically delineated in these specifications. In many instances the sections of the specifications will include references which will indicate codes, standards, and regulations which have bearing on the project, and will be enforced by the AUTHORITY HAVING JURISDICTION. The Owner may, at its option and at any time, defer to a local jurisdiction as the AUTHORITY HAVING JURISDICTION. This action, if taken, shall not subrogate any of the authority of the Owner, nor have any bearing on other unrelated requirements of these specifications.

C. CONCEALED: "Concealed" areas are those areas which cannot be seen by the building occupants, such as inside walls or above ceilings.

D. ENGINEER (or DESIGN ENGINEER or ENGINEER OF RECORD): The "Engineer" or "Design Engineer" or "Engineer of Record" is defined as the engineer whose seal appears on the construction specifications title page and on the drawings for the particular area under consideration. Note that in some cases, the work of two or more Engineers may appear on the same drawing or document. In that case, the area of responsibility of each Engineer will be noted in the area of each signed seal.

E. EXPOSED: “Exposed” areas are all areas which are exposed to view by the building occupants, including under counters, inside cabinets and closets, plus all mechanical and electrical rooms.

F. OWNER: As used in these specifications, “Owner” means the Texas Department of Transportation, as represented by the assigned designee.

G. INDICATED: The term "indicated" is a cross reference to graphic representations, notes or schedules on drawings, to other paragraphs or schedules in the Specifications, and to similar means of recording requirements on contract documents. Where terms such as "shown", "noted", "scheduled", and "specified" are used in lieu of "indicated", it is for the purpose of helping reader locate the cross reference, and no limitation of location is intended except as specifically noted.

H. DIRECTED, REQUESTED, etc.: Where not otherwise explained, terms such as "directed", "requested", "authorized", "selected", "approved", "required", "accepted", and "permitted" mean directed by Architect/Engineer", "requested by Architect/Engineer" and similar phrases. However, no such implied meaning will be interpreted to extend Architect's/Engineer's responsibility into Contractor's area of construction supervision and job safety.

I. AND/OR: Where "and/or" is used in these Specifications or on the Drawings, it shall mean "that situations exist where either one or both conditions occur or are required and shall not be interpreted to permit an option on the part of the Contractor.

J. APPROVE: Where used in conjunction with Architect's/Engineer's response to submittals, requests, applications, inquiries, reports and claims by Contractor, the meaning of term "approved" will be held to limitations to Architect's/Engineer's responsibilities and duties as specified in General and Supplementary Conditions. In no case will "approval" by Architect/Engineer be interpreted as a release of Contractor from responsibilities to fulfill requirements of contract documents or to extend Architect's/Engineer's responsibility into Contractor's area of construction supervision and job safety.

K AS REQUIRED: Where "as required" is used in these Specifications or on the drawings, it shall mean "that situations exist that are not necessarily described in detail or indicated that may cause the contractor certain complications in performing the work described or indicated. These complications entail the normal coordination activities expected of the Contractor where multiple trades are involved and new or existing construction causes deviations to otherwise simplistic approaches to the work to be performed. The term shall not be interpreted to permit an option on the part of the Contractor to achieve the end result."

L. FURNISH:

1. The term "furnish" is used to mean "supply and deliver to project site, ready for unloading, unpacking, assemble, installation, and similar operations."

2. Where "furnish" applies to work for which the installation is not otherwise specified, "furnish" in such case shall mean "furnish and install."

M. INSTALL: The term "install" is used to describe operations at project site including "unloading, unpacking, assembly, erection, placing, anchoring, applying, working to dimension, finishing, curing, protecting, cleaning and similar operation."

N. PROVIDE: The term "provide" means "to furnish and install, complete and ready for intended use.”

1.6 UTILITY CONNECTIONS AND INSPECTIONS:

A. General: Refer to DIVISION 1 for construction phasing and time increments.

B. Fees and Costs: If, during the course of the construction, a need arises to buy utilities, the Contractor shall pay all fees attendant thereto. If the City or other privately or publicly owned utility piping or electrical cable needs to be extended, relocated, or terminated, the Contractor shall pay all permits and construction/inspection fees associated with that particular work, the costs for which shall be included in the Contract price, including the cost of setting meters.

C. All work performed on this project is under the authority of the State of Texas, however, some local construction fees or construction or inspection permits may be required for new service connections, or modified connections to City or utility company controlled services. Refer to the Division 1 Section of specifications on "Special Conditions" for clarification, or contact the regulating entity directly. Note also that if inspections by personnel of jurisdictions other than TxDOT are specifically required by this document, then the Contractor is responsible for any fees or permits in connection to those requirements.

D. Compliance: The Contractor shall comply in every respect with all requirements of the National Fire Protection Association and all utility company requirements. In no case does this relieve the Contractor of the responsibility of complying with these Specifications and Drawings where specified conditions are of higher quality or quantity than the requirements of the above-specified authorities. Where requirements of the Specifications and Drawings are more lenient than the requirements of the above authorities, the Contractor shall make installations in compliance with the requirements of the above authorities with no extra compensation.

1.7 COORDINATION OF THE CONTRACT DOCUMENTS:

A. The interrelation of the Specifications, the Drawings, and the schedules are as follows: The Specifications determine the nature and quality of the materials, the Drawings establish the quantities, dimensions and details, and the schedules give the capacities and performance characteristics. If the Contractor requires additional clarification, a request shall be submitted in writing, and a response will be given in writing.

B. Should the Drawings or Specifications conflict within themselves, or with each other, the requirement with the greatest quantity and/or the highest quality shall prevail. The decision of the engineer of record for the system being installed shall be final.

1.8 FUTURE WORK:

A. The work described in the drawings shall be performed under this contract. It shall be noted that certain equipment and systems have been sized to anticipate a possible future addition to the building. It is imperative that the Contractor provide and install the equipment and systems as shown in the drawings and schedules, of the sizes, capacities and dimensions indicated.

1.9 SUBMITTALS:

A. Submit under provisions of UGC (the "Uniform General Conditions") and Special Conditions Section of the Specifications.

B. Mark all submittal literature to indicate the precise selection of materials and equipment being submitted. Note that if the specific model or material is not indicated in the submittal, and there is more than one choice possible, the submittal may be rejected, and resubmittal will be required.

C. Changes in Contract requirements will not be granted and shall not be implied by approval of submitted alternative materials and equipment. Changes will only be effected through the Change Order process, in writing.

D. Proposed Products List: Include all equipment and materials specified in the Division 16 specifications.

E. Submit shop drawings and product data grouped to include complete submittals of related systems, products, and accessories in a single submittal.

F. Submit Fabrication Drawings whenever (1) equipment proposed varies in physical size and arrangement from that indicated on the Drawings, thus causing rearrangement of equipment space, (2) where tight spaces require extreme coordination between ductwork, piping, conduit, and other equipment, (3) where called for elsewhere in these Specifications; and (4) where specifically requested by the Design Engineer. Fabrication Drawings shall be made at no additional charge to the Owner or the Design Engineer.

G. All required Fabrication Drawings, except as noted otherwise, shall be prepared at a scale of not less than 1/4" = 1'-0". Submit three blueline prints of each Fabrication Drawing to the Design Engineer for review. Reproduction and submittal of the Construction Documents is not acceptable. The Engineer will review the drawing and return one print with comments.

1.10 SUBSTITUTION OF MATERIALS AND EQUIPMENT:

A. It is not the intent of the Drawings and/or Specifications to limit products to any particular manufacturer or to discriminate against an "APPROVED EQUAL" product produced by another manufacturer. Some products of a particular manufacturer may be mentioned to set a definite standard for acceptance and to serve as a reference in comparison with other products. On the other hand, when a manufacturer's name appears in these Specifications or in the Drawings, it shall not be interpreted that the manufacturer is unconditionally acceptable as a provider of equipment for this project. The successful manufacturer or supplier shall meet all of the provisions of the appropriate specification(s).

B. The specified products have been used in preparing the Drawings and Specifications and thus establish minimum qualities with which substitutes must be at least equal to be considered acceptable. The burden of proof of equality rests with the Contractor. The decision of the Engineer is final.

1.11 MATERIALS AND WORKMANSHIP:

A. All materials, unless noted otherwise, shall be new, free from all defects, suitable for the intended use, and of the best quality of their respective kinds.

B. Materials and equipment shall be installed in accordance with the manufacturer's recommendations and the best standard practice for the type of work involved.

C. All work shall be executed by mechanics and contractors skilled in their respective trades, and the installations shall provide a neat, precise appearance.

D. Materials and/or equipment damaged in shipment or otherwise damaged prior to installation shall not be repaired at the job site but shall be replaced with new materials and/or equipment.

E. Similar equipment shall be products of the same manufacturer. Materials shall be new of standard current products of manufacturer's latest design. All components by the same manufacturer shall be mechanically and electrically compatible with rating of apparatus in which installed. Similar equipment shall be identical. For example, all panelboards shall be of the manufacturer and of the same style.

1.12 FLAME SPREAD PROPERTIES OF MATERIALS:

A. Materials and adhesives incorporated into this project shall conform to NFPA Standard 255, "Method of Test of Surface Burning Characteristics of Building Materials". The classification shall not exceed a flame spread rating of 25, nor exceed a smoke developed rating of 50, for all materials, adhesives, finishes, etc., specified for each system.

1.13 MANUFACTURER'S RECOMMENDATIONS:

A. The manufacturer's published directions and/or recommendations shall be followed in the delivery, storage, protection, installation, and wiring of all equipment and material. The Contractor shall promptly notify the Engineer, in writing, of any conflict between the requirements of the Contract Documents and the manufacturers' directions, and shall obtain the Engineer's guidance before proceeding with the work. Should the Contractor perform any such work that does not comply with the manufacturers' directions or such instructions from the Owner, the Contractor shall bear all costs arising in connection with the deficiencies.

1.14 SPACE AND EQUIPMENT ARRANGEMENT:

A. The size of electrical equipment indicated on the Drawings is approximate and based on the dimensions of a particular manufacturer. While other manufacturers may be acceptable, it is the responsibility of the Contractor to determine if the equipment proposed by the Contractor will fit in the space.

B. All equipment shall be installed in a manner to permit access to all surfaces. All nameplates shall be able to be viewed without disassembly.

C. All equipment and piping shall be installed in a manner to provide the greatest amount of clearance for access and maintenance of systems and equipment. Installation of conduit and panels which blocks personnel access to all parts of chases or mechanical spaces is prohibited.

1.15 PROTECTION:

A. The Contractor shall at all times take such precautions as may be necessary to properly protect all materials and equipment from damage from the time of delivery until the completion of the work. This shall include the erection of all required temporary shelters and supports to adequately protect any items stored in the open on the site from the weather, the ground and surrounding work; the cribbing of any items above the floor of the construction; and the covering of items in the incomplete building with tarpaulins or other protective covering; the installation of electric heaters in electrical switchgear and similar equipment to prevent moisture damage. Failure on the part of the Contractor to comply with the above will be sufficient cause for the rejection of the items in question.

B. Take particular care not to damage the building structure in performing work. All finished floors and finished surfaces shall be covered to prevent any damage by workers or their tools and equipment during the construction of the building.

1.16 SUPERVISION:

A. Each Contractor and subcontractor shall provide a competent superintendent or foreman for the work of their trade. (Refer also to the Uniform General Conditions for additional information concerning supervision.)

B. It shall be the responsibility of the General Contractor to assure that each superintendent studies all Drawings and is familiar with the work to be coordinated with and performed by other trades. The General Contractor shall coordinate the work of all trades and, before material is fabricated or installed, assure that the work will not cause an interference with another trade. Where interferences are encountered, they shall be resolved at the job site by the superintendents involved. Where interferences

cannot be resolved without major changes to the Drawings, the matter shall be referred to the Engineer for a ruling. The decision of the Engineer shall be final.

1.17 SITE OBSERVATION:

A. Site observation by the Architect, Engineer, Owner or any representative of the Owner, is for the express purpose of verifying compliance by the Contractor with the Contract Documents, and shall not be construed as construction supervision nor indication of approval of the manner or location in which the work is being performed as being a safe practice or place.

B. The safety of the workers on the site is the responsibility of the Contractor. By entering the site, the Contractor, Subcontractors, and their employees relieve the Owner of any responsibility for their safety, and accept complete responsibility for any unsafe acts or procedures which may cause them harm.

1.18 GUARANTEE:

A. **The Contractor shall guarantee all labor and materials furnished and installed under this contract for a period of one (1) year from date of FINAL ACCEPTANCE by Owner.** Certain work and materials shall be guaranteed for a longer period when so specified. The guarantee shall cover the repair or replacement without additional cost to the Owner, of any defective material or faulty workmanship.

1.19 CUTTING AND PATCHING:

A. General: Provide openings in all new or existing construction indicated in the drawings, or as necessary for the proper installation of all systems included in the project.

B. Methods of cutting: Openings cut through concrete and masonry shall be made with masonry saws and/or core drills and at such locations acceptable to the Construction Inspector and Design Engineer. Impact-type equipment shall not be used except where specifically acceptable to the Design Architect and Engineer. Openings in precast concrete slabs for conduits, outlet boxes, etc., shall be core drilled to exact size.

C. Restoration: All openings shall be finished, closed around penetrating materials as specified, or restored to "as-new" condition under the appropriate Specification Section for the materials involved, and shall match remaining surrounding materials and/or finishes.

D. Masonry: Where openings are cut through masonry walls, provide and install lintels or other structural supports to protect the remaining masonry. Adequate supports shall be provided during the cutting operation to prevent any damage to the masonry occasioned by the operation. All structural members, supports, etc., shall be of the proper size and shape, and shall be installed in a manner acceptable to the Design Engineer.

E. Plaster: All mechanical work in areas containing plaster shall be completed prior to the application of the finish plaster coat. Cutting of finish plaster coat will not be permitted.

F. Special Note: No cutting, boring, or excavating which will weaken the structure shall be undertaken.

1.20 ROOF PENETRATIONS AND FLASHING:

A. Conduit and duct sleeves, pitch pockets, and flashings compatible with the roofing installation shall be provided and installed by a qualified contractor for all roof penetrations. This shall be the responsibility of the General Contractor.

1.21 OPERATION PRIOR TO COMPLETION:

A. When any piece of electrical equipment is operable and it is to the advantage of the Contractor to operate the equipment for a purpose other than testing (for a period longer than one hour), the Contractor may do so, providing that the operation is properly supervised, and the Construction Inspector has given written permission. The warranty period shall not commence until such time as the equipment is operated for the beneficial use of the Owner, or date of substantial completion, whichever occurs first.

B. No equipment shall be operated, even for test purposes, until it has been thoroughly swept and vacuumed clean of dust, dirt and debris.

C. Regardless of whether or not the equipment has or has not been operated, the Contractor shall properly clean the equipment, install clean filters, properly adjust, and complete all deficiency list items before final acceptance by the Owner as described in the following paragraph. The date of acceptance and performance certification shall be the same date.

1.22 CLEANING AND PAINTING:

A. All equipment furnished by the electrical subcontractors shall be delivered to the job with a suitable factory protective finish. The following materials shall not be painted: copper, galvanized metal, stainless steel, fiberglass, and plastics such as PVC, PVDF, polypropylene, etc.

B. If painting is required, before painting, materials and equipment surfaces shall be thoroughly cleaned of cement, plaster, and other foreign materials, and all oil and grease shall be removed. Such surfaces shall be carefully wiped and all cracks and corners scraped out. Exposed metal work shall be carefully brushed down with steel brushes to remove rust and other spots and left smooth and clean.

C. Equipment nameplates shall be protected from being painted; suitable protection shall be afforded to the plates to prevent their being rendered illegible due to the painting operation, or receiving any overspray or spatter.

1. All uncovered, unprotected steel supports and hanger rod threads shall be cleaned and painted. Galvanized steel conduit shall not be painted.

PART 2 - PRODUCTS

(NOT USED)

PART 3 - EXECUTION

3.1 INSTALLATION METHODS:

A. Support: All wiring, cable trays and conduits shall be adequately and properly supported from the building structure by means of hanger rods or clamps fastened to the building structure as herein specified.

B. All conduits, etc., shall be cut accurately to measurements established from the actual building conditions and shall be worked into place without springing or forcing. All conduits run exposed in machinery and equipment rooms shall be installed parallel to the building lines. Conduits run in furred ceilings, etc., shall be similarly installed, unless noted otherwise. Conduits in furred ceilings and in other concealed spaces shall be neatly grouped and racked. All conduit openings shall be maintained in a sealed condition until the systems are closed with final connections.

C. All openings through all floors, walls, and roofs, etc., regardless of material for the passage of conduit, cable trays, etc., shall be sleeved. All penetrations must pass through sleeves. Sleeves shall be set in new construction before concrete is poured, as cutting holes through any part of the concrete will not be permitted unless acceptable to the Architect/Engineer. Installation of sleeves and the sealing of sleeves shall be the responsibility of the electrical contractor except roof sleeves.

3.2 REQUIRED INSPECTIONS:

A. Prior to the installation of any ceiling material, gypsum, plaster, or acoustical board, the Contractor shall notify the construction inspector so that arrangement can be made for an inspection of the above-ceiling area about to be "sealed" off. The Contractor shall give as much advance notice as possible, but no less than five (5) working days.

B. All above-ceiling areas will be subject to a formal inspection before ceilings are installed, or installation is otherwise concealed from view. All electrical work at and above the ceiling, including items supported by the ceiling grid, such as lighting fixtures, shall be complete and installed in accordance with contract requirements, including power to lighting fixtures, fans, and other powered items and all conduit supports. Adequate lighting shall be provided to permit thorough inspection of all above-ceiling items

C. The purpose of this inspection is to verify the completeness and quality of the installation of the electrical systems and any other special above ceiling systems. The ceiling supports (tee bar or lath) shall be in place so that access panel and light fixture locations are identifiable and so that clearances and access provisions may be evaluated.

D. No ceiling materials may be installed until the resulting deficiency list from this inspection is satisfied and the Construction Inspector has given approval.

3.3 TESTING:

A. Tests for specific systems and equipment are specified in associated specification sections or in the drawings. All tests specified or indicated shall be performed and witnessed by the Owner. All tests shall be individually documented, and the test report for each shall be included in the final documentation submitted to the Owner at the completion of the project. Data shall be delivered to the Design Engineer as specified under "Requirements for Final Acceptance". The documentation shall include as a:

1. Contractor firm name, supervisor's name, and name of personnel performing test.
2. Date and time of beginning of test, and date and time of test completion.
3. Description of equipment or system being tested.
4. Description of test being performed.
5. Description of outcome of test.
6. Dated signatures of person performing test, Contractor's supervisor, and Owner's representative, including legibly printed names and titles.

B. The Contractor shall make, at no additional cost to the Owner, any tests deemed necessary by the inspection departments having jurisdiction, and in the National Fire Protection Association, ASTM, etc. Standards listed. The Contractor shall provide all equipment, materials, and labor for making such tests. Reasonable amounts of fuel and electrical energy costs for system tests will be paid by the Owner where services are readily available. Where such services are not readily available, the Contractor shall provide all water, electricity or fuel. NOTE THAT SUCH TESTS WILL BE REASONABLY REQUIRED TO CONFIRM THE SPECIFIED OPERATION, CAPACITY, OR DURABILITY OF THE MATERIAL OR EQUIPMENT, AND WILL NOT BE INVOKED UNLESS DEEMED ABSOLUTELY NECESSARY.

C. The Construction Inspector shall be notified in writing at least 5 working days prior to each test and other Specification requirements requiring action on the part of the Construction Inspector. All equipment shall be placed in operation and tested for proper automatic control requirements before the test.

D. Insulation resistance test shall be made on each 480 and 208 volt feeder conductor before and after installation. Tests shall be made with a 500 vdc megger. Readings shall be recorded and test reports furnished as described in this section.

E. All defective lamps found during testing shall be replaced.

F. All receptacles and light switches shall be tested to verify they are connected properly.

G. All HVAC motors and line voltage controls shall be checked to verify correct operation.

H. All panelboards shall be inspected prior to installing covers to verify correct wiring connections and color coding procedures.

3.4 TRAINING

A. When required by a specific specification section, Contractor shall provide a minimum of six (6) hours of training for a minimum of four (4) of the Owners personnel, on the operation and maintenance of the existing systems, including normal maintenance procedures and the location and operation of emergency shut down switches, etc. Contractor shall provide complete, written, manufacturers literature on all electrical systems for each person trained.

END OF SECTION

SECTION 16060
GROUNDING AND BONDING

PART 1 - GENERAL

1.1 SUMMARY

A. Section Includes:
   1. Rod electrodes.
   2. Wire.
   3. Mechanical connectors.
   4. Exothermic connections.

1.2 RELATED SECTIONS

A. Section 16010 – Basic Electrical Requirements

1.3 REFERENCES

A. Institute of Electrical and Electronics Engineers:
   1. IEEE 142 - Recommended Practice for Grounding of Industrial and Commercial Power Systems.
   2. IEEE 1100 - Recommended Practice for Powering and Grounding Electronic Equipment.

B. National Fire Protection Association:
   1. NFPA 70 - National Electrical Code.

1.4 SYSTEM DESCRIPTION

A. Grounding systems use the following elements as grounding electrodes:
   1. Metal underground water pipe.
   2. Building steel.
   3. Rod electrode.

1.5 PERFORMANCE REQUIREMENTS

A. Grounding System Resistance: Per NEC, 25 ohms maximum for a single grounding electrode or 25 ohms maximum for multiple electrodes that are connected together.

1.6 SUBMITTALS

A. Product Data: Submit data on grounding electrodes and connections.

B. Test Reports: Provide grounding system test reports per Part 3.4.

1.7 CLOSEOUT SUBMITTALS

A. Project Record Documents: Record actual locations of components and grounding electrodes.

1.8 QUALITY ASSURANCE

A. Provide grounding materials conforming to requirements of NEC, IEEE 142, and UL labeled.

1.9 QUALIFICATIONS

A. Manufacturer: Company specializing in manufacturing Products specified in this section with minimum three years experience.

B. Installer: Company specializing in performing work of this section with minimum 3 years experience.

1.10 DELIVERY, STORAGE, AND HANDLING

A. Accept materials on site in original factory packaging, labeled with manufacturer's identification.

B. Protect from weather and construction traffic, dirt, water, chemical, and mechanical damage, by storing in original packaging.

1.11 COORDINATION

A. Complete grounding and bonding of building reinforcing steel prior concrete placement.

PART 2 - PRODUCTS

2.1 ROD ELECTRODES

A. Manufacturers:
1. Copperweld, Inc.
2. Erico, Inc.
3. O-Z Gedney Co.
4. Thomas & Betts, Electrical.
5. Approved equal.

B. Product Description:
1. Material: Copper-clad steel.
2. Diameter: 3/4 inch.
3. Length: 10 feet.

C. Connector: Connector for exothermic welded connection.

2.2 WIRE

A. Material: Stranded copper.

B. Grounding Electrode Conductor: Copper conductor, insulated.

C. Bonding Conductor: Copper conductor, insulated.

2.3 MECHANICAL CONNECTORS

A. Manufacturers:
   1. Erico, Inc.
   2. ILSCO Corporation.
   3. O-Z Gedney Co.
   4. Thomas & Betts, Electrical.
   5. Approved equal.

B. Description: Bronze connectors, suitable for grounding and bonding applications, in configurations required for particular installation.

2.4 EXOTHERMIC CONNECTIONS

A. Manufacturers:
   1. Cadweld, Erico, Inc.
   2. Copperweld, Inc.
   3. ILSCO Corporation.
   4. O-Z Gedney Co.
   5. Thomas & Betts, Electrical.
   6. Approved equal.

B. Product Description: Exothermic materials, accessories, and tools for preparing and making permanent field connections between grounding system components.

PART 3 - EXECUTION

3.1 EXAMINATION

A. Verify final backfill and compaction has been completed before driving rod electrodes.

3.2 PREPARATION

A. Remove surface contaminants at connection points.

3.3 INSTALLATION

A. Install in accordance with IEEE 142.

B. Install rod electrodes at locations as indicated on Drawings. Install additional rod electrodes to achieve specified resistance to ground.

C. Install grounding and bonding conductors concealed from view.

D. Bond together metal siding not attached to grounded structure; bond to ground.

E. Install isolated grounding conductor for circuits supplying personal computers in accordance with IEEE 1100.

F. Equipment Grounding Conductor: Install separate, insulated conductor within each feeder and branch circuit raceway. Terminate each end on suitable lug, bus, or bushing.

G. Permanently ground entire light and power system in accordance with NEC, including service equipment, distribution panels, lighting panel boards, switch and starter enclosures, motor frames, grounding type receptacles, and other exposed non-current carrying metal parts of electrical equipment.

H. Install branch circuits feeding isolated ground receptacles with separate insulated grounding conductor, connected only at isolated ground receptacle ground terminals, and at isolated ground bus of serving panel.

I. Permanently attach equipment and grounding conductors prior to energizing equipment.

3.4 FIELD QUALITY CONTROL

A. Perform ground resistance testing in accordance with IEEE 142.

B. Perform continuity testing in accordance with IEEE 142.

C. When improper grounding is found on receptacles, check receptacles in entire project and correct. Perform retest.

D. All new ground rods shall be tested after installation using a ground rod resistance tester. The maximum resistance for each ground rod shall be no more than 25 ohms, as required by the NEC. After the ground rod resistance test, if the ground rod has a resistance higher than 25 ohms, the Contractor will need to modify the ground system to lower this resistance. To lower the resistance, the Contractor shall drive and interconnect additional ground rods in a triad formation, install longer ground rods or use manufactured, encapsulated electrolyte ground rods to obtain a resistance of 25 ohms or less. Manufactured, electrolyte ground rods shall be equal to Lyncole XIT Grounding Systems. For a multiple ground rod installations, rods shall be spaced 10' apart and #1/0 AWG or larger bare, copper conductors shall be installed underground between rods, minimum 18" below grade. After corrective measures are complete, the new ground rod installation shall be re-tested with a ground rod tester to show that each installation has a total resistance of 25 ohms or less. **Ground rod resistance test results shall be documented, signed by the licensed electrician performing the tests, and submitted to the Owner for approval. These test results shall include ground rod resistance values and the weather and soil conditions present during the tests**.

END OF SECTION

SECTION 16070
ELECTRICAL HANGERS AND SUPPORTS

PART 1 GENERAL

1.1 SUMMARY

A. Section Includes:
1. Conduit supports.
2. Formed steel channel.
3. Spring steel clips.
4. Sleeves.
5. Mechanical sleeve seals.
6. Equipment bases and supports.

1.2 Related Sections:

A. Section 03300 - Cast-In-Place Concrete: Product requirements for concrete for placement by this section.

1.3 REFERENCES

A. National Fire Protection Association:
1. NFPA 70 - National Electrical Code.

1.4 SUBMITTALS

A. Product Data:
1. Submit manufacturers catalog data including load capacity.

B. Manufacturer's Installation Instructions:

C. Manufacturer's Certificate: Certify products meet or exceed specified requirements.

1.5 QUALIFICATIONS

A. Manufacturer: Company specializing in manufacturing Products specified in this section with minimum three years experience.

B. Installer: Company specializing in performing work of this section with minimum 3 years experience.

1.6 DELIVERY, STORAGE, AND HANDLING

A. Accept materials on site in original factory packaging, labeled with manufacturer's identification.

B. Protect from weather and construction traffic, dirt, water, chemical, and mechanical damage, by storing in original packaging.

PART 2 PRODUCTS

2.1 CONDUIT SUPPORTS

A. Manufacturers:
   1. Allied Tube & Conduit Corp.
   2. Electroline Manufacturing Company.
   3. O-Z Gedney Co.
   4. Approved equal.

B. Hanger Rods: Threaded high tensile strength galvanized carbon steel with free running threads.

C. Beam Clamps: Malleable Iron, with tapered hole in base and back to accept either bolt or hanger rod. Set screw: hardened steel.

D. Conduit clamps for trapeze hangers: Galvanized steel, notched to fit trapeze with single bolt to tighten.

E. Conduit clamps - general purpose: One hole malleable iron for surface mounted conduits.

F. Cable Ties: High strength nylon temperature rated to 185 degrees F. Self locking.

2.2 FORMED STEEL CHANNEL

A. Manufacturers:
   1. Allied Tube & Conduit Corp.
   2. B-Line Systems.
   3. Midland Ross Corporation, Electrical Products Division.
   4. Unistrut Corp.
   5. Approved equal.

B. Product Description: Galvanized 12 gage thick steel. With holes 1-1/2 inches on center.

2.3 SLEEVES

A. Sleeves for conduits through Non-fire Rated Floors: 18 gage thick galvanized steel.

B. Sleeves for conduits through Non-fire Rated Beams, Walls, Footings, and Potentially Wet Floors: Steel pipe or 18 gage thick galvanized steel.

2.4 MECHANICAL SLEEVE SEALS

A. Manufacturers:
   1. Thunderline Link-Seal, Inc
   2. NMP Corporation.
   3. Approved equal.

B. Product Description: Modular mechanical type, consisting of interlocking synthetic rubber links shaped to continuously fill annular space between object and sleeve, connected with bolts and

pressure plates causing rubber sealing elements to expand when tightened, providing watertight seal and electrical insulation.

PART 3 EXECUTION

3.1 EXAMINATION

A. Verify openings are ready to receive sleeves.

3.2 INSTALLATION - HANGERS AND SUPPORTS

A. Anchors and Fasteners:
   1. Concrete Structural Elements: Provide expansion anchors or powder actuated anchors.
   2. Steel Structural Elements: Provide beam clamps.
   3. Concrete Surfaces: Provide self-drilling anchors and expansion anchors.
   4. Solid Masonry Walls: Provide expansion anchors.
   5. Sheet Metal: Provide sheet metal screws.
   6. Wood Elements: Provide wood screws.

B. Install conduit and raceway support and spacing in accordance with NEC.

C. Do not fasten supports to pipes, ducts, mechanical equipment, or conduit.

D. Install multiple conduit runs on common hangers.

E. Supports:
   1. Fabricate supports from structural steel or formed steel channel. Install hexagon head bolts to present neat appearance with adequate strength and rigidity. Install spring lock washers under nuts.
   2. Install surface mounted cabinets and panelboards with minimum of four anchors.
   3. In wet and damp locations install steel channel supports to stand cabinets and panelboards 1 inch off wall.

3.3 INSTALLATION - EQUIPMENT BASES AND SUPPORTS

A. Provide housekeeping pads of concrete, minimum 3-1/2 inches thick and extending 6 inches beyond supported equipment..

B. Using templates furnished with equipment, install anchor bolts, and accessories for mounting and anchoring equipment.

3.4 INSTALLATION - SLEEVES

A. Exterior watertight entries: Seal with adjustable interlocking rubber links.

B. Conduit penetrations not required to be watertight: Sleeve and fill with silicon foam.

C. Set sleeves in position in forms. Provide reinforcing around sleeves.

D. Size sleeves large enough to allow for movement due to expansion and contraction. Provide for continuous insulation wrapping.

E. Extend sleeves through floors 1inch above finished floor level. Caulk sleeves.

F. Where conduit or raceway penetrates floor, ceiling, or wall, close off space between conduit or raceway and adjacent work with stuffing insulation and caulk airtight. Provide close fitting metal collar or escutcheon covers at both sides of penetration.

G. Install chrome plated steel escutcheons at finished surfaces.

3.5 PROTECTION OF FINISHED WORK

A. Protect adjacent surfaces from damage by material installation.

END OF SECTION

SECTION 16075
ELECTRICAL IDENTIFICATION

PART 1 - GENERAL

1.1 SUMMARY

A. Section Includes:
   1. Nameplates.
   2. Adhesive signs.
   3. Wire markers.
   4. Conduit markers.
   5. Underground Warning Tape

1.2 RELATED SECTIONS

A. Section 16010 – Basic Electrical Requirements

1.3 SUBMITTALS

A. Product Data:
   1. Submit manufacturer's catalog literature for each product used on the project.

B. Manufacturer's Installation Instructions: Indicate installation instructions, special procedures, and installation.

1.4 QUALIFICATIONS

A. Manufacturer: Company specializing in manufacturing Products specified in this section with minimum three years experience.

B. Installer: Company specializing in performing Work of this section with minimum three years experience.

1.5 DELIVERY, STORAGE, AND HANDLING

A. Accept identification products on site in original containers. Inspect for damage.

B. Protect from weather and construction traffic, dirt, water, chemical, and mechanical damage, by storing in original wrapping.

1.6 NAMEPLATES

A. Product Description: Laminated three-layer plastic with engraved white letters on a black background color. Use white letters on red background for Fire Alarm equipment.

B. Letter Size:
   1. 1/8 inch high letters for identifying individual equipment and loads.
   2. ¼ inch high letters for identifying grouped equipment and loads.

C. Minimum nameplate thickness: 1/8 inch.

1.7 ADHESIVE WARNING SIGNS

A. Product Description: Sized as noted on the drawings. Pressure-Sensitive Vinyl with adhesive backing, 4- mil thick, white background with black lettering, OSHA header color as noted by the sign type, rated for outdoor use, fade resistant in sunlight, flexible down to -40° F.

1.8 WIRE MARKERS

A. Description: Split sleeve, or tubing type wire markers.

B. Legend:
1. Power and Lighting Circuits: Branch circuit or feeder number as indicated on Drawings.
2. Control Circuits: Control wire number as indicated Drawings.

1.9 CONDUIT AND RACEWAY MARKERS

A. Description: Labels fastened with adhesive.

B. Color:
1. 208 Volt System: Black lettering on white background.
2. Fire Alarm System: Red lettering on white background.
3. Telephone System: Blue lettering on white background.

C. Legend:
1. 208 Volt System: 208 VOLTS.
2. Fire Alarm System: FIRE ALARM.
3. Telephone System: TELEPHONE.

1.10 UNDERGROUND WARNING TAPE

A. Description: Minimum 4 inch wide plastic tape, detectable type, colored red with suitable warning legend describing buried electrical lines.

1.11 PREPARATION

A. Degrease and clean surfaces to receive adhesive for identification materials.

1.12 INSTALLATION

A. Install identifying devices after completion of painting.

B. Nameplate Installation:
1. Install nameplate parallel to equipment lines.
2. Install nameplate for each electrical distribution and control equipment enclosure with corrosive-resistant mechanical fasteners.
3. Install nameplates for each control panel and major control components located outside panel with corrosive-resistant mechanical fasteners.
4. Secure nameplate to equipment front using screws.

5. Secure nameplate to inside surface of door on recessed panel board in finished locations.
6. Each nameplate shall include the equipment name or designation, the voltage, the phase and the state the source panel of the feeder to the equipment in a statement that reads "FEEDS FROM PANEL __.
7. Install nameplates for the following:
   a. Main Service Disconnect Device.
   b. Switchboards.
   c. Panel boards.
   d. Transformers.
   e. Service Disconnect Devices for equipment.
   f. Individual Circuit Breaker enclosures.
   g. Current Transformer enclosures.
   h. Other enclosures as noted on the drawings or as directed by the Owner.

C. Junction Box Labeling:

1. All junction and pull boxes 4" square or smaller shall be labeled with the panel number and the circuit numbers contained in the box. This labeling shall be performed by legibly writing the information on the box cover with a black, indelible marker

D. Wire Marker Installation:
1. Install wire marker for each conductor (hot wires and neutral wires) at panel boards, load centers, wireways, pull boxes, junction boxes, and at each load circuit connection point.
2. Mark data cabling at each end. Install additional marking at accessible locations along the cable run.
3. Install labels at data outlets identifying patch panel and port designation as indicated on Drawings.

E. Underground Warning Tape Installation:
1. Install underground warning tape along length of each underground conduit, raceway, or cable 6 to 8 inches below finished grade, directly above buried conduit, raceway, or cable. Install warning tape with writing facing up.

END OF SECTION

SECTION 16123
BUILDING WIRE AND CABLE

PART 1 - GENERAL

1.1 SUMMARY

A. Section includes building wire and cable and wiring connectors and connections.

1.2 RELATED SECTIONS

A. Section 16010 – Basic Electrical Requirements

1.3 SYSTEM DESCRIPTION

A. Product Requirements: Provide products as follows:
   1. Solid conductor for feeders and branch circuits 10 AWG and smaller.
   2. Stranded conductors for control circuits.
   3. Conductor not smaller than 12 AWG for power and lighting circuits.
   4. Conductor not smaller than 12 AWG for line voltage control circuits.
   5. 10 AWG conductors for 20 ampere, 120 volt branch circuits longer than 75 feet.
   6. 10 AWG conductors for 20 ampere, 277 volt branch circuits longer than 200 feet.

B. Wiring Methods: Provide the following wiring methods:
   1. Concealed Dry Interior Locations: Use only Type THHN/THWN insulation, in raceway.
   2. Exposed Dry Interior Locations: Use only Type THHN/THWN insulation, in raceway.
   3. Above Accessible Ceilings: Use only Type THHN/THWN insulation, in raceway.
   4. Wet or Damp Interior Locations: Use only Type THHN/THWN insulation, in raceway.
   5. Exterior Locations: Use only Type THHN/THWN insulation, in raceway.
   6. Underground Locations: Use only Type THHN/THWN insulation, in raceway.

1.4 SUBMITTALS

A. Product Data: Submit for building wire and cable.

1.5 QUALIFICATIONS

A. Manufacturer: Company specializing in manufacturing products specified in this section with minimum three years experience.

1.6 FIELD MEASUREMENTS

A. Verify field measurements are as indicated on Drawings.

1.7 COORDINATION

A. Where wire and cable destination is indicated and routing is not shown, determine routing and lengths required.

1.8 BUILDING WIRE

A. Manufacturers:
   1. Diamond Wire & Cable Co.
   2. Essex Group Inc.
   3. General Cable Co.
   4. Approved equal.

B. Product Description: Single conductor insulated wire.

C. Conductor: Copper.

D. Insulation: NFPA 70; THHN/THWN insulation.

PART 2 - EXECUTION

2.1 EXAMINATION

A. Verify interior of building has been protected from weather.

B. Verify mechanical work likely to damage wire and cable has been completed.

C. Verify raceway installation is complete and supported.

2.2 PREPARATION

A. Completely and thoroughly swab raceway before installing wire.

2.3 INSTALLATION

A. Route wire and cable to meet Project conditions.

B. All electrical wiring and cable, including HVAC control and thermostat cables, shall be installed in conduit or other approved raceway.

C. Neatly train and lace wiring inside boxes, equipment, and panel boards.

D. Identify and color code wire and cable under provisions of Section 16075. Identify each conductor with its circuit number or other designation indicated.

E. Special Techniques--Building Wire in Raceway:
   1. Pull conductors into raceway at same time.
   2. Install building wire 4 AWG and larger with pulling equipment.
   3. Use pulling compound to install wiring in raceways.

F. Special Techniques - Wiring Connections:
   1. Clean conductor surfaces before installing lugs and connectors.
   2. Make splices, taps, and terminations to carry full ampacity of conductors with no perceptible temperature rise.
   3. Tape uninsulated conductors and connectors with electrical tape to 150 percent of insulation rating of conductor.
   4. Install split bolt connectors for copper conductor splices and taps, 6 AWG and larger.

5. Install solderless pressure connectors with insulating covers for copper conductor splices and taps, 8 AWG and smaller.
6. Install insulated spring wire connectors with plastic caps for copper conductor splices and taps, 10 AWG and smaller.
7. Install solid conductor for feeders and branch circuits 10 AWG and smaller.

2.4 WIRE COLOR

A. General
   1. For wire sizes 10 AWG and smaller, install wire colors in accordance with the following:
      a. Black, red, and blue for circuits at 120/208 volts single or three phase, wye systems.
      b. Three-way and four-way switch travelers shall be purple or lavender. Switch leg conductors shall be color coded different from the traveler conductors and the phase conductors of the system. The color used for switch leg conductors shall be the same throughout the project. The color used for traveler conductors shall be the same throughout the project.
   2. For wire sizes 8 AWG and larger, identify wire with colored tape at terminals, splices and boxes. Colors are as follows:
      a. Black, red, and blue for circuits at 120/208 volts single or three phase, wye system.

B. Neutral Conductors: White or gray per NEC. When two neutral conductors are routed in one conduit, install one white conductor and one gray conductor and identify each with the proper circuit number. When two or more neutrals are located in one conduit, individually identify each with proper circuit number, or use gray wire for one of two neutrals.

C. Branch Circuit Conductors: Install three or four wire home runs with each phase uniquely color coded.

D. Feeder Circuit Conductors: Uniquely color code each phase.

E. Ground Conductors:
   1. For 6 AWG and smaller: Green.
   2. For 4 AWG and larger: Identify with green tape at both ends and visible points including junction boxes.

END OF SECTION

SECTION 16130
RACEWAY AND BOXES

PART 1 - GENERAL

1.1 SUMMARY

A. Section includes conduit and tubing, surface raceways, wireways, outlet boxes, pull and junction boxes, and handholes.

1.2 RELATED SECTIONS

A. Section 16010 – Basic Electrical Requirements

B. Section 16060 - Grounding and Bonding

C. Section 16070 - Electrical Hangers and Supports

D. Section 16075 - Electrical Identification

1.3 REFERENCES

A. American National Standards Institute:
1. ANSI C80.1 - Rigid Steel Conduit, Zinc Coated
2. ANSI C80.3 - Specification for Electrical Metallic Tubing, Zinc Coated

B. National Electrical Manufacturers Association:
1. NEMA 250 - Enclosures for Electrical Equipment (1000 Volts Maximum)
2. NEMA FB 1 - Fittings, Cast Metal Boxes, and Conduit Bodies for Conduit and Cable Assemblies
3. NEMA OS 1 - Sheet Steel Outlet Boxes, Device Boxes, Covers, and Box Supports
4. NEMA RN 1 - Polyvinyl Chloride (PVC) Externally Coated Galvanized Rigid Steel Conduit and Intermediate Metal Conduit
5. NEMA TC 2 - Electrical Polyvinyl Chloride (PVC) Tubing and Conduit
6. NEMA TC 3 - PVC Fittings for Use with Rigid PVC Conduit and Tubing

1.4 SYSTEM DESCRIPTION

A. Raceway and boxes located as indicated on Drawings, and at other locations required for splices, taps, wire pulling, equipment connections, and compliance with regulatory requirements. Raceway and boxes are shown in approximate locations unless dimensioned. Provide raceway to complete wiring system.

B. Underground More than 5 feet outside Foundation Wall: Schedule 40 PVC, nonmetallic conduit. Provide cast metal boxes or nonmetallic handholes or other pullboxes as scheduled on the drawings.

C. Underground within 5 feet from Foundation Wall or edge of paving: Provide corrosion protected, rigid steel conduit or plastic coated rigid steel conduit. Provide pull boxes as noted on the drawings.

D. In or Under Slab on Grade: Provide corrosion protected rigid steel conduit or plastic coated rigid steel conduit. Provide cast metallic boxes.

E. Outdoor Locations, Above Grade: Provide rigid steel conduit. Provide cast metal outlet, pull, and junction boxes.

F. In Slab Above Grade: Provide corrosion protected rigid steel conduit or Schedule 40 PVC nonmetallic conduit. Provide cast boxes.

G. Wet and Damp Locations: Provide rigid steel conduit. Provide cast metal outlet, junction, and pull boxes. Provide flush mounting outlet box in finished areas.

H. Concealed Dry Locations: Provide electrical metallic tubing. Provide sheet-metal boxes. Provide flush mounting outlet box in finished areas. Provide hinged enclosure for large pull boxes. Type MC cable is not allowed.

I. Exposed Dry Locations: Provide electrical metallic tubing. Provide sheet-metal boxes. Provide flush mounting outlet box in finished areas. Provide hinged enclosure for large pull boxes. Type MC cable is not allowed.

1.5 DESIGN REQUIREMENTS

A. Minimum Raceway Size: ¾ inch unless otherwise specified.

1.6 SUBMITTALS

A. Product Data: Submit for the following:
1. Flexible metal conduit.
2. Liquid tight flexible metal conduit.
3. Nonmetallic conduit.
4. Raceway fittings.
5. Conduit bodies.
6. Wireway.
7. Pull and junction boxes.

B. Manufacturer's Installation Instructions: Submit application conditions and limitations of use stipulated by Product testing agency specified under Regulatory Requirements. Include instructions for storage, handling, protection, examination, preparation, and installation of Product.

1.7 DELIVERY, STORAGE, AND HANDLING

A. Protect conduit from corrosion and entrance of debris by storing above grade. Provide appropriate covering.

B. Protect PVC conduit from sunlight.

1.8 COORDINATION

A. Coordinate installation of outlet boxes for equipment connected under Section 16150.

B. Coordinate mounting heights, orientation and locations of outlets mounted above counters, benches, and backsplashes.

PART 2 - PRODUCTS

2.1 METAL CONDUIT

A. Rigid Steel Conduit: ANSI C80.1

B. Fittings and Conduit Bodies: NEMA FB 1 all steel threaded fittings. Do not use thread-less connectors for rigid steel conduit.

2.2 PVC COATED METAL CONDUIT

A. Product Description: NEMA RN 1; rigid steel conduit with external PVC coating, 20 mil thick.

B. Fittings and Conduit Bodies: NEMA FB 1; steel fittings with external PVC coating to match conduit.

2.3 FLEXIBLE METAL CONDUIT

A. Product Description: Interlocked steel construction.

B. Fittings: NEMA FB 1.

2.4 LIQUID-TIGHT FLEXIBLE METAL CONDUIT

A. Product Description: Interlocked steel construction with PVC jacket, type LFMC.

B. Fittings: NEMA FB 1

2.5 ELECTRICAL METALLIC TUBING (EMT)

A. Product Description: ANSI C80.3; galvanized tubing.

B. Fittings and Conduit Bodies: NEMA FB 1; steel or die-cast, compression type only. **Do not use set screw fittings.**

2.6 NON-METALLIC CONDUIT

A. Product Description: NEMA TC 2; Schedule 40 PVC or Schedule 80 PVC as noted on the drawings.

B. Fittings and Conduit Bodies: NEMA TC 3.

2.7 SURFACE METAL RACEWAY

A. Product Description: Sheet metal channel with fitted cover, suitable for use as surface metal raceway.

B. Finish: Gray enamel

C. Fittings, Boxes, and Extension Rings: Furnish manufacturer's standard accessories; match finish on raceway.

2.8 OUTLET BOXES

A. Sheet Metal Outlet Boxes: NEMA OS 1, galvanized steel.
   1. Luminaire and Equipment Supporting Boxes: Rated for weight of equipment supported; furnish 1/2 inch male fixture studs where required.
   2. Concrete Ceiling Boxes: Concrete type.

B. Cast Boxes: NEMA FB 1, Type FD, cast ferroalloy. Furnish gasketed cover by box manufacturer. Furnish threaded hubs.

C. Wall Plates for Finished Areas: As specified in Section 16140.

D. Wall Plates for Unfinished Areas: Furnish gasketed cover.

PART 3 - EXECUTION

3.1 EXAMINATION

A. Verify outlet locations and routing and termination locations of raceway prior to rough-in.

3.2 INSTALLATION

A. Ground and bond raceway and boxes in accordance with Section 16060.

B. Fasten raceway and box supports to structure and finishes.

C. Identify raceway and boxes in accordance with Section 16075.

D. Arrange raceway and boxes to maintain headroom and present neat appearance.

3.3 INSTALLATION - RACEWAY

A. Raceway routing is shown in approximate locations unless dimensioned. Route to complete wiring system.

B. Arrange raceway supports to prevent misalignment during wiring installation.

C. Support raceway using coated steel or malleable iron straps, lay-in adjustable hangers, clevis hangers, and split hangers in accordance with Section 16070.

D. Group related raceway; support using conduit rack. Construct rack using steel channel.

E. Do not support raceway with wire or perforated pipe straps. Remove wire used for temporary supports

F. Do not attach raceway to ceiling support wires or other piping systems.

G. Route exposed raceway parallel and perpendicular to walls.

H. Route raceway installed above accessible ceilings parallel and perpendicular to walls.

I. Maximum of 6' length for above ceiling, flexible raceway connections to light fixtures.

J. Maximum of 2' length for final, flexible raceway connection to equipment.

K. Route conduit in and under slab from point-to-point.

L. Maintain clearance between raceway and piping for maintenance purposes.

M. Maintain 12 inch clearance between raceway and surfaces with temperatures exceeding 104 degrees F.

N. Cut conduit square using saw or pipe cutter; de-burr cut ends.

O. Bring conduit to shoulder of fittings; fasten securely.

P. Join nonmetallic conduit using cement as recommended by manufacturer. Wipe nonmetallic conduit dry and clean before joining. Apply full even coat of cement to entire area inserted in fitting. Allow joint to cure for minimum 20 minutes.

Q. Install conduit hubs or sealing locknuts to fasten conduit to sheet metal boxes in damp and wet locations and to cast boxes.

R. Install no more than equivalent of three 90 degree bends between boxes. Install conduit bodies to make sharp changes in direction, as around beams.

S. Avoid moisture traps; install junction box with drain fitting at low points in conduit system.

T. Install fittings to accommodate expansion and deflection where raceway crosses control and expansion joints.

U. Install suitable pull string or cord in each empty raceway except sleeves and nipples.

V. Install suitable caps to protect installed conduit against entrance of dirt and moisture.

W. Surface Raceway: Install flat-head screws, clips, and straps to fasten raceway channel to surfaces; mount plumb and level. Install insulating bushings and inserts at connections to outlets and corner fittings.

X. Close ends and unused openings in wireway.

3.4 INSTALLATION - BOXES

A. Install wall mounted boxes at elevations to accommodate mounting heights as indicated on Drawings or as specified in section for outlet device.

B. Adjust box location prior to rough-in to accommodate intended purpose.

C. Orient boxes to accommodate wiring devices oriented as specified in Section 16140.

D. Install pull boxes and junction boxes above accessible ceilings and in unfinished areas only.

E. In Accessible Ceiling Areas: Install outlet and junction boxes no more than 6 inches from ceiling access panel or from removable recessed luminaire.

F. Locate flush mounting box in masonry wall to require cutting of masonry unit corner only. Coordinate masonry cutting to achieve neat opening.

G. Do not install flush mounting box back-to-back in walls; install with minimum 6 inches separation. Install with minimum 24 inches separation in acoustic rated walls.

H. Secure flush mounting box to interior wall and partition studs. Accurately position to allow for surface finish thickness.

I. Install stamped steel bridges to fasten flush mounting outlet box between studs.

J. Install flush mounting box without damaging wall insulation or reducing its effectiveness.

K. Install adjustable steel channel fasteners for hung ceiling outlet box.

L. Do not fasten boxes to ceiling support wires or other piping systems.

M. Support boxes independently of conduit.

N. Install gang box where more than one device is mounted together. Do not use sectional box.

O. Install gang box with plaster ring for single device outlets.

3.5 INTERFACE WITH OTHER PRODUCTS

A. Route conduit through roof openings for piping and ductwork or through suitable roof jack with pitch pocket

B. Locate outlet boxes to allow luminaries positioned as indicated on reflected ceiling plan.

C. Align adjacent wall mounted outlet boxes for switches, thermostats, and similar devices.

3.6 ADJUSTING

A. Adjust flush-mounting outlets to make front flush with finished wall material.

B. Install knockout closures in unused openings in boxes.

3.7 CLEANING

A. Clean interior of boxes to remove dust, debris, and other material.

B. Clean exposed surfaces and restore finish.

END OF SECTION

SECTION 16140
WIRING DEVICES

PART 1 - GENERAL

1.1 SUMMARY

A. Section includes wall switches; receptacles; multi outlet assembly; and device plates and decorative box covers.

B. Related Sections:
1. Section 16010 – Basic Electrical Requirements
2. Section 16130 - Raceway and Boxes: Outlet boxes for wiring devices.

1.2 REFERENCES

A. National Electrical Manufacturers Association:
1. NEMA WD 1 - General Requirements for Wiring Devices.
2. NEMA WD 6 - Wiring Devices-Dimensional Requirements.

1.3 SUBMITTALS

A. Product Data: Submit manufacturer's catalog information showing dimensions, colors, and configurations.

1.4 QUALIFICATIONS

A. Manufacturer: Company specializing in manufacturing products specified in this section with minimum three years experience.

PART 2 - PRODUCTS

2.1 WALL SWITCHES

A. Manufacturers:
1. Hubbell
2. Pass and Seymour
3. Leviton
4. Approved equal.

B. Product Description: NEMA WD 1, Heavy-Duty AC only general-use snap switch.

C. Body and Handle: Ivory plastic with toggle handle unless alternate color is specified on the drawings.

D. Ratings: Match branch circuit and load characteristics.

2.2 RECEPTACLES

A. Manufacturers:
1. Hubbell

2. Pass and Seymour
3. Leviton
4. Approved equal.

B. Product Description: NEMA WD 1, Heavy-duty general use receptacle.

C. Device Body: Ivory plastic unless alternate color is specified on the drawings

D. Convenience Receptacle: 20 amp, Type 5-20R.

E. GFCI Receptacle: Convenience receptacle with integral ground fault circuit interrupter to meet regulatory requirements.

2.3 WALL PLATES

A. Manufacturers:
1. Hubbell
2. Pass and Seymour
3. Leviton
4. Approved equal.

B. Decorative Cover Plate: Ivory nylon unless alternate color or metal plate is specified on the drawings.

C. Jumbo Cover Plate: Ivory nylon unless alternate color or metal plate is specified on the drawings.

D. Weatherproof Cover Plate: Gasketed cast metal plate with hinged and gasketed device cover unless a gasketed, in-use type cover is specified on the drawings.

PART 3 - EXECUTION

3.1 EXAMINATION

A. Verify outlet boxes are installed at proper height.

B. Verify wall openings are neatly cut and completely covered by wall plates.

C. Verify branch circuit wiring installation is completed, tested, and ready for connection to wiring devices.

3.2 PREPARATION

A. Clean debris from outlet boxes.

3.3 INSTALLATION

A. Install devices plumb and level.

B. Install switches with OFF position down.

C. Install receptacles with grounding pole on bottom.

D. Connect wiring device grounding terminal to branch circuit equipment grounding conductor.

E. Install decorative plates on switch, receptacle, and blank outlets in finished areas.

F. Install galvanized steel plates on outlet boxes and junction boxes in unfinished areas, above accessible ceilings, and on surface mounted outlets.

3.4 INTERFACE WITH OTHER PRODUCTS

A. Coordinate locations of outlet boxes provided under Section 16130 to obtain mounting heights as specified and as indicated on drawings.

B. Install wall switch 48 inches above finished floor or as noted on the drawings.

C. Install convenience receptacle and voice/data outlets 18 inches above finished floor or as noted on the drawings.

D. Install convenience receptacle and voice/data outlets 6 inches above counter or as noted on the drawings.

E. Install voice/data outlets for wall mounted telephone 48 inches above finished floor or as noted on the drawings.

3.5 FIELD QUALITY CONTROL

A. Inspect each wiring device for defects.

B. Operate each wall switch with circuit energized and verify proper operation.

C. Verify each receptacle device is energized.

D. Test each receptacle device for proper polarity.

E. Test each GFCI receptacle device for proper operation.

3.6 ADJUSTING

A. Adjust devices and wall plates to be flush and level.

3.7 CLEANING

A. Clean exposed surfaces to remove splatters and restore finish.

END OF SECTION

SECTION 16150
WIRING CONNECTIONS

PART 1 - GENERAL

1.1 SUMMARY

A. Section includes electrical connections to equipment.

B. Related Sections:
1. Section 16010 – Basic Electrical Requirements
2. Section 16123 - Building Wire and Cable.
3. Section 16130 - Raceway and Boxes.

1.2 REFERENCES

A. National Electrical Manufacturers Association:
1. NEMA WD 1 - General Requirements for Wiring Devices.
2. NEMA WD 6 - Wiring Devices-Dimensional Requirements.

1.3 SUBMITTALS

A. Product Data: Submit wiring device manufacturer’s catalog information showing dimensions, configurations, and construction.

B. Manufacturer's installation instructions.

1.4 COORDINATION

A. Obtain and review shop drawings, product data, manufacturer’s wiring diagrams, and manufacturer's instructions for equipment furnished under other sections.

B. Determine connection locations and requirements.

C. Sequence rough-in of electrical connections to coordinate with installation of equipment.

D. Sequence electrical connections to coordinate with start-up of equipment.

PART 2 - PRODUCTS

2.1 CORD AND PLUGS

A. Attachment Plug Construction: Conform to NEMA WD 1.

B. Configuration: NEMA WD 6; match receptacle configuration at outlet furnished for equipment.

C. Cord Construction: Type SO multiconductor flexible cord with identified equipment grounding conductor, suitable for use in damp locations.

D. Size: Suitable for connected load of equipment, length of cord, and rating of branch circuit over current protection.

PART 3 - EXECUTION

3.1 EXAMINATION

A. Verify equipment is ready for electrical connection, for wiring, and to be energized.

3.2 INSTALLATION

A. Make all line voltage electrical connections.

B. Make conduit connections to equipment using flexible metal conduit. Use liquid-tight flexible metal conduit with watertight connectors in damp or wet locations. Flexible conduit length to equipment is limited to 2 feet. Support flexible conduit.

C. Connect heat producing equipment using wire and cable with insulation suitable for temperatures encountered.

D. Install receptacle outlet to accommodate connection with attachment plug.

E. Install cord and cap for field-supplied attachment plug.

F. Install suitable strain-relief clamps and fittings for cord connections at outlet boxes and equipment connection boxes.

G. Install disconnect switches, controllers, control stations, and control devices to complete equipment wiring requirements.

H. Install terminal block jumpers to complete equipment wiring requirements.

I. Install interconnecting conduit and wiring between devices and equipment to complete equipment wiring requirements.

3.3 ADJUSTING

A. Cooperate with utilization equipment installers and field service personnel during checkout and starting of equipment to allow testing and balancing and other startup operations. Provide personnel to operate electrical system and checkout wiring connection components and configurations

END OF SECTION

SECTION 16210
ELECTRICAL UTILITY SERVICES

PART 1 - GENERAL

1.1 SUMMARY

A. Section includes arrangement with Utility Company for permanent electric service; payment of Utility Company charges for service; service provisions; and utility metering equipment.

1.2 RELATED SECTIONS

A. 16010 – Basic Electrical Requirements

1.3 SYSTEM DESCRIPTION

A. Utility Company: **Austin Energy**

B. System Characteristics: **208Y/120 volt, 3 phase, 4 wire, 60 hertz**

C. Service Entrance: Underground

D. Underground Service Provisions: Underground service entrance to building service entrance equipment.
   1. Contractor to provide transformer foundation to utility company's requirements and conduit for primary conductors from transformer to riser pole.
   2. Utility company will install primary conductors and transformer. They will also make connections to transformer.

1.4 QUALITY ASSURANCE

A. Perform work in accordance with Utility Company written requirements.

B. Maintain one copy of each document on site.

1.5 FIELD MEASUREMENTS

A. Verify field measurements are as indicated on Drawings.

1.6 COORDINATION

A. Contact Utility Company regarding charges related to service installation. Include utility charges in this contract.

PART 2 - PRODUCTS

2.1 UTILITY METERS

A. Furnished by Utility Company.

2.2 UTILITY METER BASE

A. Provide in accordance with Utility Company's requirements.

2.3 TRANSFORMER PAD

A. Product Description: Poured-in-place or pre-cast concrete pad as required by the Utility Company.

PART 3 - EXECUTION

3.1 EXAMINATION

A. Verify service equipment is ready to be connected and energized.

END OF SECTION

SECTION 16235
ENGINE GENERATORS

PART 1 - GENERAL

1.1 SUMMARY

A. Section includes engine generator set, exhaust silencer and fittings, transfer switch, fuel fittings, remote control panel, battery, and charger.

B. RELATED SECTIONS
1. 16010 – Basic Electrical Requirements
2. 16060 – Grounding and Bonding
3. 16075 – Electrical Identification

1.2 REFERENCES

A. National Electrical Manufacturers Association:
1. NEMA 250 - Enclosures for Electrical Equipment (1000 Volts Maximum).
2. NEMA AB 1 - Molded Case Circuit Breakers and Molded Case Switches.
3. NEMA ICS 10 - Industrial Control and Systems: AC Transfer Switch Equipment.
4. NEMA MG 1 - Motors and Generators.

B. National Fire Protection Association:
1. NFPA 110 - Standard for Emergency and Standby Power Systems.

1.3 SYSTEM DESCRIPTION

A. Description: Engine generator assembly and accessories to provide source of power for application in accordance with NFPA 110.

B. Capacity: 20 kW, 24 kVA at elevation of 3300 feet above sea level, standby rating using specified engine cooling scheme.

1.4 SUBMITTALS

A. Shop Drawings: Indicate electrical characteristics and connection requirements. Include plan and elevation views with overall and interconnection point dimensions, fuel consumption rate curves at various loads, ventilation and combustion air requirements, electrical diagrams including schematic and interconnection diagrams.

B. Product Data: Submit data showing dimensions, weights, ratings, interconnection points, and internal wiring diagrams for engine, generator, control panel, transfer switch, battery, battery rack, battery charger, exhaust silencer, and vibration isolators.

C. Test Reports: Indicate results of performance testing.

D. Manufacturer's Field Reports: Indicate inspections, findings, and recommendations.

1.5 CLOSEOUT SUBMITTALS

A. Operation and Maintenance Data: Submit instructions and service manuals for normal operation, routine maintenance, oil sampling and analysis for engine wear, and emergency maintenance procedures.

1.6 QUALIFICATIONS

A. Manufacturer: Company specializing in manufacturing products specified in this section with minimum three years.

1.7 WARRANTY

A. Furnish parts and labor warranty for 12 months after final acceptance of the system.

1.8 MAINTENANCE MATERIALS

A. Furnish one set of tools required for preventative maintenance of engine generator system. Package tools in adequately sized metal tool box.

B. Furnish two of each fuel, oil and air filter element.

PART 2 - PRODUCTS

2.1 SERVICE CONDITIONS

A. Temperature: 100 degrees F.

B. Altitude: 3,300 feet.

2.2 ENGINE

A. Manufacturers:
1. Generac
2. Cummins
3. Stewart & Stevenson.
4. Onan
5. Approved equal.

B. Product Description: Water-cooled in-line or V-type, four-stroke cycle internal combustion engine.

C. Rating: Sufficient to operate under 10 percent overload for one hour in ambient of 100 degrees F at elevation of 3300 feet.

D. Fuel System: Natural gas

E. Engine speed: 3600 rpm.

F. Safety Devices: Engine shutdown on high water temperature, low oil pressure, over speed, and engine over crank. Limits as selected by manufacturer.

G. Engine Starting: DC starting system with positive engagement, number and voltage of starter motors in accordance with manufacturer's instructions. Furnish remote starting control circuit, with MANUAL-OFF-REMOTE selector switch on engine-generator control panel.

H. Engine Jacket Heater: Thermal circulation type water heater with integral thermostatic control, sized to maintain engine jacket water at 90 degrees F, and suitable for operation on 120 volts AC.

I. Radiator: Radiator using glycol coolant, with blower type fan, sized to maintain safe engine temperature in ambient temperature of 110 degrees F. Radiator air flow restriction 0.5 inches of water maximum.

J. Engine Accessories: Fuel filter, lube oil filter, intake air filter, lube oil cooler, gear-driven water pump. Furnish water temperature gage and lube oil pressure gage on engine/generator control panel.

K. Mounting: Furnish unit with suitable spring-type vibration isolators and mount on structural steel base.

2.3 GENERATOR

A. Manufacturers:
1. Generac
2. Cummins
3. Stewart & Stevenson.
4. Onan
5. Approved equal.

B. Product Description: NEMA MG1, three phase, four pole, re-connectable brushless synchronous generator with brushless exciter.

C. Rating 20 kW, 24 kVA, at 0.8 power factor, 208Y/120 volts, 3 phase, 4 wire, 60 Hz .

D. Insulation Class: F.

E. Temperature Rise: 130 degrees C Standby.

F. Enclosure: NEMA MG1, open drip proof.

G. Voltage Regulation: Furnish generator mounted volts per hertz exciter-regulator to match engine and generator characteristics, with voltage regulation plus or minus 1 percent from no load to full load. Furnish manual controls to adjust voltage droop, voltage level (plus or minus 5 percent) and voltage gain.

2.4 GOVERNOR

A. Product Description: Electronic governor to maintain engine speed within 0.5 percent, steady state, and 5 percent, no load to full load, with recovery to steady state within 2 seconds following sudden load changes. Equip governor with means for manual operation and adjustment.

2.5 AUTOMATIC TRANSFER SWITCH

A. Manufacturers:

1. Generac
2. Cummins
3. Stewart & Stevenson.
4. Onan
5. Approved equal.

B. Product Description: NEMA ICS 10, automatic transfer switch.

C. Configuration: Electrically operated, mechanically held transfer switch.

D. Interrupting Capacity: 100 percent of continuous rating.

E. Withstand Current Rating: 50,000 rms symmetrical amperes, when used with molded case circuit breaker.

F. Control Features and Functions:
1. Indicating Lights: Mount in cover of enclosure to indicate NORMAL SOURCE AVAILABLE, ALTERNATE SOURCE AVAILABLE, switch position.
2. Test Switch: Mount in cover of enclosure to simulate failure of normal source.
3. Return to Normal Switch: Mount in cover of enclosure to initiate manual transfer from alternate source to normal source.
4. Transfer Switch Auxiliary Contacts: 1 normally open; 1 normally closed.
5. Normal Source Monitor: Monitor each line of normal source voltage and frequency; initiate transfer when voltage drops below 85 percent or frequency varies more than 3 percent from rated nominal value.
6. Alternate Source Monitor: Monitor alternate source voltage and frequency; inhibit transfer when voltage is below 85 percent or frequency varies more than 3 percent from rated nominal value.
7. Switched Neutral: Overlapping contacts.

G. Automatic Sequence of Operation:
1. Initiate Time Delay to Start Alternate Source Engine Generator: Upon initiation by normal source monitor.
2. Time Delay To Start Alternate Source Engine Generator: 0 to 30 seconds, adjustable.
3. Initiate Transfer Load to Alternate Source: Upon initiation by normal source monitor and permission by alternate source monitor.
4. Time Delay Before Transfer to Alternate Power Source: 0 to 30 seconds, adjustable.
5. Initiate Retransfer Load to Normal Source: Upon permission by normal source monitor.
6. Time Delay Before Transfer to Normal Power: 0 to 30 seconds, adjustable; bypass time delay in event of alternate source failure.

H. Time Delay Before Engine Shut Down: 0 to 30 minutes, adjustable, of unloaded operation.

I. Engine Exerciser: Start engine every 7 days; run for 30 minutes before shutting down. Bypass exerciser control when normal source fails during exercising period.

J. Enclosure:
1. Enclosure: ICS 10, Type 1.
2. Finish: Manufacturer's standard gray enamel

2.6 ACCESSORIES

A. Exhaust Silencer: Critical type silencer, with muffler companion flanges and flexible stainless steel exhaust fitting, sized in accordance with engine manufacturer's instructions.

B. Batteries: Heavy duty, lead-acid storage batteries, 170 ampere-hours minimum capacity. Match battery voltage to starting system. Furnish cables and clamps.

C. Battery Tray: Treated for electrolyte resistance, constructed to contain spillage.

D. Battery Charger: Current limiting type designed to float at 2.17 volts for each cell and equalize at 2.33 volts for each cell. Furnish overload protection, full wave rectifier, DC voltmeter and ammeter, and 120 volts AC fused input. Furnish wall mounted enclosure to meet NEMA 250, Type 1 requirements.

E. Line Circuit Breaker: NEMA AB 1 molded case circuit breaker on generator output with integral thermal and instantaneous magnetic trip in each pole. Furnish battery voltage operated shunt trip, connected to open circuit breaker on engine failure. Unit mounts in enclosure to meet NEMA 250, Type 1 requirements.

F. Engine-Generator Control Panel: NEMA 250, Type 1 generator-mounted control panel enclosure with engine and generator controls and indicators. Furnish provision for padlock and the following equipment and features:
   1. Frequency Meter: 45-65 Hz. range, 3.5 inch dial.
   2. AC Output Voltmeter: 3.5 inch dial, 2 percent accuracy, with phase selector switch.
   3. AC Output Ammeter: 3.5 inch dial, 2 percent accuracy, with phase selector switch.
   4. Output voltage adjustment.
   5. Push-to-test indicator lamps, one each for low oil pressure, high water temperature, over speed, and over crank.
   6. Engine start/stop selector switch.
   7. Engine running time meter.
   8. Oil pressure gage.
   9. Water temperature gage.
   10. Auxiliary Relay: 3PDT, operates when engine runs, with contact terminals pre-wired to terminal strip.
   11. Additional visual indicators and alarms in accordance with by NFPA 110.
   12. Remote Alarm Contacts: Factory wire SPDT contacts to terminal strip for remote alarm functions in accordance with NFPA 110.

G. Remote Annunciator Panel: Flush mounted panel with brushed stainless steel finish. Furnish audible and visible indicators and alarms in accordance with NFPA 110.

H. Weather-protective Enclosure: Reinforced steel housing allowing access to control panel and service points, with lockable doors and panels. Furnish fixed louvers, battery rack, and silencer.

2.7 SOURCE QUALITY CONTROL

A. Provide shop inspection and testing of completed assembly.

PART 3 - EXECUTION

3.1 INSTALLATION

A. Install engraved plastic nameplates in accordance with Section 16075.

B. Install Generator Set on concrete pad detailed in the plans. Anchor base frame to pad in accordance with manufacturer's recommendations.

C. Ground and bond generator and other electrical system components in accordance with Section 16060.

3.2 MANUFACTURER'S FIELD SERVICES

A. Before the work is accepted, an authorized representative of the manufacturer shall personally inspect the installation and operation of the equipment to determine that it is properly installed and in proper operating order. The qualifications of the representative shall be appropriate to the technical requirements of the installation and shall be submitted to the owner for approval. The decision of the owner concerning the appropriateness of the representative shall be final. Testing and checking shall be accomplished during the course of the work where required by work being concealed, and at the completion of the work otherwise. In addition, the Contractor shall submit to the Design Engineer a signed statement from the representative certifying as follows: "**I certify that the materials and/or equipment listed below have been personally inspected by the undersigned authorized manufacturer's representative and is properly installed and operating in accordance with the manufacturer's recommendations**".

B. Start-up of the equipment shall be performed by the authorized representative of the manufacturer.

3.3 ADJUSTING

A. Adjust generator output voltage and engine speed to meet specified ratings.

3.4 CLEANING

A. Clean engine and generator surfaces. Replace oil and fuel filters with new.

3.5 DEMONSTRATION AND TRAINING

A. Furnish 8 hours of instruction each for two persons, to be conducted at project site with manufacturer's representative.

B. Simulate power outage by interrupting normal source, and demonstrate system operates to provide standby power.

END OF SECTION

SECTION 16411
ENCLOSED SWITCHES

PART 1 - GENERAL

1.1 SUMMARY

A. Section includes fusible and non-fusible switches.

B. Related Sections:
1. Section 16010 - Basic Electrical Requirements
2. Section 16060 - Grounding and Bonding
3. Section 16075 - Electrical Identification
4. Section 16491 - Fuses

1.2 REFERENCES

A. National Electrical Manufacturers Association:
1. NEMA FU 1 - Low Voltage Cartridge Fuses.
2. NEMA KS 1 - Enclosed and Miscellaneous Distribution Equipment Switches (600 Volts Maximum).

B. International Electrical Testing Association:
1. NETA ATS - Acceptance Testing Specifications for Electrical Power Distribution Equipment and Systems.

1.3 SUBMITTALS

A. Product Data: Submit switch ratings and enclosure dimensions.

1.4 QUALIFICATIONS

A. Manufacturer: Company specializing in manufacturing products specified in this section with minimum three years documented experience.

PART 2 - PRODUCTS

2.1 FUSIBLE SWITCH ASSEMBLIES

A. Manufacturers:
1. GE Electrical
2. Cutler Hammer
3. Square D
4. Approved equal.

B. Product Description: NEMA KS 1, Type HD rated enclosed load interrupter knife switch. Handle lockable in OFF position.

C. Fuse clips: Designed to accommodate NEMA FU 1, Class R fuses.

D. Enclosure: NEMA KS 1, to meet conditions. Fabricate enclosure from steel finished with manufacturer's standard gray enamel.
   1. Interior Dry Locations: Type 1.
   2. Exterior Locations: Type 3R.

E. Service Entrance: Switches identified for use as service equipment are to be labeled for this application. Furnish solid neutral assembly and equipment ground bar.

F. Furnish switches with entirely copper current carrying parts.

2.2 NONFUSIBLE SWITCH ASSEMBLIES

A. Manufacturers:
   1. GE Electrical
   2. Cutler Hammer
   3. Square D
   4. Approved equal.

B. Product Description: NEMA KS 1, Type HD rated enclosed load interrupter knife switch. Handle lockable in OFF position.

C. Enclosure: NEMA KS 1, to meet conditions. Fabricate enclosure from steel finished with manufacturer's standard gray.
   1. Interior Dry Locations: Type 1.
   2. Exterior Locations: Type 3R.

D. Service Entrance: Switches identified for use as service equipment are to be labeled for this application. Furnish solid neutral assembly and equipment ground bar.

E. Furnish switches with entirely copper current carrying parts.

2.3 SWITCH RATINGS

A. Switch Rating: Horsepower rated for AC or DC as indicated on Drawings.

B. Short Circuit Current Rating: UL listed for 10,000 rms symmetrical amperes when used with or protected by Class H or K fuses (30-600 ampere), 200,000 rms symmetrical amperes when used with or protected by Class R or Class J fuses (30-600 ampere switches employing appropriate fuse rejection schemes), 200,000 rms symmetrical amperes when used with or protected by Class L fuses (800-1200 ampere).

PART 3 - EXECUTION

3.1 INSTALLATION

A. Install enclosed switches plumb. Provide supports in accordance with Section 16070.

B. Height: 5 feet to operating handle or as noted on the drawings.

C. Install fuses for fusible disconnect switches. Refer to Section 16491 for product requirements.

D. Install engraved plastic nameplates in accordance with Section 16075.

E. Apply adhesive tag on inside door of each fused switch indicating NEMA fuse class and size installed.

END OF SECTION

SECTION 16442
PANELBOARDS

PART 1 - GENERAL

1.1 SUMMARY

A. Section includes distribution and branch circuit panel boards.

B. Related Sections:
1. Section 16010 – Basic Electrical Requirements
2. Section 16060 - Grounding and Bonding
3. Section 16075 - Electrical Identification.
4. Section 16491 - Fuses

1.2 REFERENCES

A. National Electrical Manufacturers Association:
1. NEMA AB 1 - Molded Case Circuit Breakers and Molded Case Switches.
2. NEMA PB 1 - Panelboards.
3. NEMA PB 1.1 - General Instructions for Proper Installation, Operation, and Maintenance of Panelboards Rated 600 Volts or Less.

B. National Fire Protection Association:
1. NFPA 70 - National Electrical Code.

C. Underwriters Laboratories Inc.:
1. UL 67 - Safety for Panelboards.

1.3 SUBMITTALS

A. Shop Drawings: Indicate outline and support point dimensions, voltage, main bus ampacity, integrated short circuit ampere rating, circuit breaker and fusible switch arrangement and sizes.

B. Product Data: Submit catalog data showing specified features of standard products.

1.4 CLOSEOUT SUBMITTALS

A. Project Record Documents: Record actual locations of panelboards and record actual circuiting arrangements.

B. Operation and Maintenance Data: Submit spare parts listing; source and current prices of replacement parts and supplies; and recommended maintenance procedures and intervals.

1.5 QUALIFICATIONS

A. Manufacturer: Company specializing in manufacturing products specified in this section with minimum three years experience.

1.6 MAINTENANCE MATERIALS

A. Furnish two of each panelboard key. Panelboards keyed alike.

PART 2 - PRODUCTS

2.1 DISTRIBUTION PANELBOARDS

A. Manufacturers:
   1. Square D
   2. Cutler Hammer
   3. GE Electrical
   4. Approved equal.

B. Product Description: NEMA PB 1, circuit breaker type panel board.

C. Service Conditions:
   1. Temperature: 100 degrees F
   2. Altitude: 1000 feet above sea level.

D. Panelboard Bus: Copper current carrying components, ratings as indicated on Drawings. Furnish copper ground bus in each distribution panelboard; furnish insulated ground bus as indicated on Drawings.

E. Minimum integrated short circuit rating: 10,000 amperes rms symmetrical for 208/240 volt panel boards or as indicated on Drawings and 22,000 amperes rms symmetrical for 480 volt panel boards or as indicated on Drawings.

F. Molded Case Circuit Breakers: NEMA AB 1, bolt on circuit breakers with integral thermal and instantaneous magnetic trip in each pole. Furnish circuit breakers UL listed as Type HACR for air conditioning equipment branch circuits. Furnish circuit breakers UL listed as Type SWD for lighting branch circuits.

G. Circuit Breaker Accessories: Trip units and auxiliary switches as indicated on Drawings.

H. Enclosure: NEMA PB 1, Type 1 in interior areas and Type 3R in exterior areas.

I. Cabinet Front: Surface hinged door with flush lock, metal directory frame, finished in manufacturer's standard gray enamel.

2.2 BRANCH CIRCUIT PANELBOARDS

A. Manufacturers:
   1. GE Electrical Model
   2. Cutler Hammer
   3. Square D
   4. Approved equal.

B. Product Description: NEMA PB1, circuit breaker type, lighting and appliance branch circuit panelboard.

C. Panelboard Bus: Copper current carrying components, ratings as indicated on Drawings. Furnish copper ground bus in each panel board; furnish insulated ground bus as indicated on Drawings.

D. Minimum Integrated Short Circuit Rating: 10,000 amperes rms symmetrical for 208/240 volt panel boards, or as indicated on Drawings and 22,000 amperes rms symmetrical for 480 volt panel boards or as indicated on Drawings.

E. Molded Case Circuit Breakers: NEMA AB 1, bolt-on type thermal magnetic trip circuit breakers, with common trip handle for all poles, listed as Type SWD for lighting circuits, Type HACR for air conditioning equipment circuits. Do not use tandem circuit breakers.

F. Cabinet Front: Surface hinged door with flush lock, metal directory frame, finished in manufacturer's standard gray enamel.

G. Enclosure: NEMA PB 1, Type 1 in interior areas and Type 3R in exterior areas.

PART 3 - EXECUTION

3.1 INSTALLATION

A. Install panel boards in accordance with NEMA PB 1.1.

B. Install panelboards plumb.

C. Install recessed panelboards flush with wall finishes.

D. Height: 6 feet to top of panel board; install panel boards taller than 6 feet with bottom no more than 4 inches above floor.

E. Install filler plates for unused spaces in panelboards.

F. Provide typed circuit directory for each branch circuit panel board. Revise directory to reflect circuiting changes to balance phase loads.

G. Install engraved plastic nameplates in accordance with Section 16075.

H. Install spare conduits out of each recessed panelboard to accessible location above ceiling. Minimum spare conduits: 3 empty 1 inch. Identify each as SPARE.

I. Ground and bond panelboard enclosure according to Section 16060. Connect equipment ground bars of panels in accordance with NFPA 70.

J. Perform switch inspections and tests listed in NETA ATS, Section 7.5.

K. Perform controller inspections and tests listed in NETA ATS, Section 7.16.1.

3.2 ADJUSTING

A. Measure steady state load currents at each panelboard feeder; rearrange circuits in panelboard to balance phase loads to within 20 percent of each other. Maintain proper phasing for multi-wire branch circuits.

END OF SECTION

SECTION 16491
FUSES

PART 1 - GENERAL

1.1 SUMMARY]

Section includes fuses.

1.2 RELATED SECTIONS

A. 16010 – Basic Electrical Requirements
B. 16411 - Enclosed Switches

1.3 REFERENCES

National Electrical Manufacturers Association:
1. NEMA FU 1 - Low Voltage Cartridge Fuses.

1.4 FUSE PERFORMANCE REQUIREMENTS

A. Main Service Switches Larger than 600 amperes: Class L (fast-acting).

B. Main Service Switches: Class RK5, Dual Element, Time Delay.

C. Power Load Feeder Switches: RK5, Dual Element, Time Delay.

D. Motor Load Feeder Switches: Class RK1, Low Peak, Dual Element, Time Delay.

E. Lighting Load Feeder Switches: RK5, Dual Element, Time Delay.

F. Other Feeder Switches: RK5, Dual Element, Time Delay.

G. General Purpose Branch Circuits: Class RK1, Low Peak, Dual Element, Time Delay.

H. Control Circuits: Supply control circuit fuses per equipment manufacturer's recommendations.

1.5 SUBMITTALS

Product Data: Submit data sheets showing electrical characteristics, including time-current curves.

1.6 CLOSEOUT SUBMITTALS

Project Record Documents: Record actual sizes, ratings, and locations of fuses.

1.7 QUALIFICATIONS

Manufacturer: Company specializing in manufacturing products specified in this section with minimum three years experience.

1.8 MAINTENANCE MATERIALS

Furnish two fuse pullers for each size fuse on the project.

1.9 EXTRA MATERIALS

Furnish six spare fuses of each Class, size, and rating installed.

PART 2 - PRODUCTS

2.1 FUSES

A. Manufacturers:
   1. Bussman
   2. Shawmut
   3. Approved equal.

B. Dimensions and Performance: NEMA FU 1, Class as specified or as indicated on Drawings.

C. Voltage: Rating suitable for circuit phase-to-phase voltage.

PART 3 - EXECUTION

3.1 INSTALLATION

Install fuse with label oriented so manufacturer, type, and size are easily read.

END OF SECTION

SECTION 16510
INTERIOR LUMINAIRES

PART 1 - GENERAL

1.1 SUMMARY

A. Section includes interior luminaires, lamps, ballasts, and accessories.

B. Related Sections:
1. Section 16010 – Basic Electrical Requirements
2. Section 16530 - Emergency lighting

1.2 REFERENCES

A. American National Standards Institute:
1. ANSI C82.1 - American National Standard for Lamp Ballast-Line Frequency Fluorescent Lamp Ballast.
2. ANSI C82.4 - American National Standard for Ballasts-for High-Intensity-Discharge and Low-Pressure Sodium Lamps (Multiple-Supply Type).

1.3 SUBMITTALS

A. Shop Drawings: Indicate dimensions and components for each luminaire not standard product of manufacturer.

B. Product Data: Submit dimensions, ratings, and performance data.

1.4 QUALIFICATIONS

A. Manufacturer: Company specializing in manufacturing products specified in this section with minimum three years experience.

1.5 FIELD MEASUREMENTS

A. Verify field measurements prior to fabrication.

PART 2 - PRODUCTS

2.1 INTERIOR LUMINAIRES

A. Product Description: Complete interior luminaire assemblies, with features, options, and accessories as scheduled.

2.2 FLUORESCENT BALLASTS

A. Product Description: Electronic ballast less than 20 percent THD suitable for lamps specified, with voltage to match luminaire voltage.

2.3 HIGH INTENSITY DISCHARGE (HID) BALLASTS

A. Product Description: ANSI C82.4, metal halide lamp ballast, suitable for lamp specified, with voltage to match luminaire voltage.

2.4 FLUORESCENT LAMPS

A. Manufacturers:
   1. General Electric
   2. Philips
   3. Approved equal.

2.5 HID LAMPS

A. Manufacturers:
   1. General Electric
   2. Philips
   3. Approved equal.

PART 3 - EXECUTION

3.1 INSTALLATION

A. Install suspended luminaires using pendants supported from swivel hangers. Install pendant length required to suspend luminaire at indicated height.

B. Support luminaires larger than 2 x 4 foot size independent of ceiling framing.

C. Locate recessed ceiling luminaires as indicated on Drawings.

D. Install surface mounted luminaires plumb and adjust to align with building lines and with each other. Secure to prevent movement.

E. Install recessed luminaires to permit removal from below.

F. Install recessed luminaires using accessories and fire-stopping materials to meet regulatory requirements for fire rating.

G. Install clips to secure recessed grid-supported luminaires in place.

H. Install wall-mounted luminaires at height as indicated on Drawings.

I. Install accessories furnished with each luminaire.

J. Connect luminaires to branch circuit outlets provided under Section 16130 using flexible conduit.

K. Make wiring connections to branch circuit using building wire with insulation suitable for temperature conditions within luminaire.

L. Install specified lamps in each luminaire.

M. Ground and bond interior luminaires in accordance with Section 16060.

3.2 FIELD QUALITY CONTROL

A. Operate each luminaire after installation and connection. Inspect for proper connection and operation.

3.3 ADJUSTING

A. Aim and adjust luminaires.

3.4 CLEANING

A. Remove dirt and debris from enclosures.

B. Clean photometric control surfaces as recommended by manufacturer.

C. Clean finishes and touch up damage.

3.5 SPARE LAMPS

A. Re-lamp all incandescent or filament type luminaires at Substantial Completion.

B. Provide spare lamps as follows:
1. HID Lamps: Four spare lamps of each size and type.
2. Linear Fluorescent: Eight spare lamps of each size, type, and color.
3. Compact Fluorescent: Four spare lamps of each size, type, and color.
4. Incandescent, Quartz, Halogen: Eight spare lamps of each size and type.

3.6 SCHEDULES

A. See schedule on drawings.

END OF SECTION

SECTION 16530
EMERGENCY LIGHTING

PART 1 - GENERAL

1.1 SUMMARY

A. Section includes emergency lighting units.

1.2 RELATED SECTIONS

A. 16010 – Basic Electrical Requirements

B. 16510 - Interior Luminaries

1.3 REFERENCES

A. National Electrical Manufacturers Association:
   1. NEMA WD 6 - Wiring Devices-Dimensional Requirements.

1.4 SYSTEM DESCRIPTION

A. Emergency lighting to comply with requirements.

1.5 SUBMITTALS

A. Product Data: Submit dimensions, ratings, and performance data.

1.6 QUALIFICATIONS

A. Manufacturer: Company specializing in manufacturing products specified in this section with minimum three years experience.

PART 2 - PRODUCTS

2.1 EMERGENCY LIGHTING UNITS

A. Product Description: Self-contained incandescent emergency lighting unit as scheduled on the drawings.

2.2 EXIT SIGNS

A. Product Description: Exit sign fixture as scheduled on the drawings.

2.3 FLUORESCENT LAMP EMERGENCY POWER SUPPLY

A. Product Description: Emergency battery power supply suitable for installation in ballast compartment of fluorescent luminaire.

B. Lamp Ratings: One F32W lamp providing 1100 lumens, minimum.

C. Include TEST switch and AC ON indicator light, installed to be operable and visible from outside of assembled luminaire.

PART 3 - EXECUTION

3.1 INSTALLATION

A. Install suspended exit signs using pendants supported from swivel hangers. Install pendant length required to suspend sign at indicated height.

B. Install surface-mounted emergency lighting units and exit signs plumb and adjust to align with building lines and with each other. Secure to prevent movement.

C. Install wall-mounted emergency lighting units and exit signs at height as indicated on Drawings.

D. Install accessories furnished with each emergency lighting unit and exit sign.

E. Connect emergency lighting units and exit as indicated on Drawings.

F. Make wiring connections to branch circuit using building wire with insulation suitable for temperature conditions within unit.

G. Install specified lamps in each emergency lighting unit and exit sign.

H. Ground and bond emergency lighting units and exit signs in accordance with Section 16060.

3.2 FIELD QUALITY CONTROL

A. Operate each unit after installation and connection. Inspect for proper connection and operation.

3.3 ADJUSTING

A. Aim and adjust lamp fixtures.

B. Position exit sign directional arrows as indicated on Drawings.

3.4 PROTECTION OF FINISHED WORK

A. Re-lamp emergency lighting units and exit signs having failed lamps at Substantial Completion.

END OF SECTION

SECTION 16710
TELECOMMUNICATIONS CABLING

PART 1 – GENERAL

1.1 RELATED SECTIONS

A. 16010 – Basic Electrical Requirements

1.2 SCOPE OF WORK INCLUDED

A. Telecommunications Contractor (hereafter referred to as Contractor) shall, for a fixed fee, procure and install of all required materials to provide a complete and functional telecommunications cabling system as defined in the accompanying project drawings, notes, and specifications. Contractor shall provide a complete, functional system including all necessary components, whether identified in this Section or not.

B. The work performed under this Section shall be of high quality and performed in a professional manner. The Texas Department of Transportation (TXDOT) reserves the right to reject all or a portion of the work performed, either on technical or aesthetic grounds.

C. Contractor shall, through coordination with TxDOT or TxDOT's Representative, provide materials and labor to result in an installed and tested, complete and working telecommunication cabling system as depicted within the project drawings/notes, and as described herein.

D. This Section of the Project documentation identifies the components, manufacturers, and the acceptable installation standards for such components. Component identifications are included within this Section whether they are included in this project or not. Using the project drawings/notes, the Contractor shall determine which components do not need to be included and installed. Before beginning any work on the project, the Contractor shall provide a list of excluded components to TxDOT or TxDOT's Representative.

E. The Contractor shall initiate contact with and coordinate with the local telephone company and the TxDOT Information Systems Division - Voice Services Branch (512-465-7699) to ensure that a standard Regulated Service Entrance or acceptable substitute is available and adequate to support the number of devices called for in the drawings. The Regulated Service Entrance includes the termination, lightning protection, and Telephone Company demarcation equipment and must be installed in compliance with all applicable codes and standards. Contractor shall provide and install punch blocks, back boards, multi-pair riser cable, Cat-3 or Cat-5 compliant station wiring, ladder rack and/or J-hook assemblies, termination devices, and whatever else is needed to provide voice services at locations as depicted within the project drawings and notes. The drawings and notes depict routing, termination points, and other pertinent information.

F. If included within the project drawings and notes, Contractor shall provide and install termination devices, mounting cabinets, interduct, multi-strand fiber cable, and whatever else is needed to provide high speed data services over fiber cable. The drawings and notes depict routing, termination points, and other pertinent information.

G. Contractor shall provide and install device mounting racks, Cat-5 compliant station wiring, ladder rack and/or J-hook assemblies, patch panels, station outlet boxes, termination devices, and whatever else is needed to provide high speed data services at locations as depicted within the project drawings and notes. The drawings and notes depict routing, termination points, and other pertinent information.

H. Where called for within the drawings and notes, Contractor shall provide and install four-inch (4") RGS conduit and pull boxes. Unless otherwise depicted within the drawings/notes, all conduit shall be entombed in steel reinforced concrete. Each conduit shall contain a minimum of two (2) high strength nylon (or equivalent) pull cords at all times.

I. Horizontal Cat-5 UTP 4-pair blue-jacketed station cable shall be provided and installed as depicted on the drawings (denoted as "data"). Installed data station cables shall be placed within conduit, Cat-5 compliant cable clips, cable raceway, and/or cable ladder rack. Data station cables shall be routed from each outlet as shown on the drawings to the hub room as shown on the drawings. Data station cables shall be homerun from point to point with no splices. Data station cables shall be terminated on EIA/TIA-568-A Cat-5 compliant 8-position/8-conductor (8P8C) modular jacks utilizing T568B wiring pin-outs at the user end, and on EIA/TIA-568-A Cat-5 compliant 8P8C 48-port patch panels utilizing T568B wiring pin-outs within the hub room rack mounted patch panels.

J. Horizontal Cat-3 UTP 4-pair white-jacketed station cable shall be provided and installed as depicted on the drawings (denoted as "voice"). Installed voice station cables shall be placed within conduit, Cat-3/5 compliant cable clips, cable raceway, and/or cable ladder rack. Voice station cables shall be routed from each outlet as shown on the drawings to the punch blocks located within the hub room as shown on the drawings. Voice station cables shall be homerun from point to point with no splices. Each voice station cable shall be terminated on two (2) 6-position/6-conductor (6P6C) modular jacks at each outlet as indicated on the drawing details at the user end, and on 66M150 termination blocks within the hub room.

K. Exact layouts of fixed wall offices, conference rooms, and modular furniture outlet placements shall be as provided by TXDOT. In base bid, Contractor shall provide pricing based on the number of new outlets and reinstalled outlets shown on the drawings. Contractor shall provide unit pricing per each type of outlet that may be added by TxDOT or TxDOT’s Representative at any time prior to completion of Project. Contractor shall provide unit pricing for up to twenty (20) Cat-3 and/or Cat-5 (in any combination) point to point cable runs that may be added by TxDOT or TxDOT's Representative for miscellaneous use which may include, but is not limited to, elevator telephones, fire alarms, and card entry devices.

L. Prior to the installation of the modular furniture, Contractor shall install the appropriate number of cables to each power pole location and fixed wall location and safely coil and store, suspended above the ceiling. After the modular furniture has been installed (by others), Contractor shall install the fixed wall outlets and surface mount modular outlets, route the cables from the ceiling to the outlets, and terminate and dress the outlets. Contractor shall ensure that a minimum of fifteen feet (15’) per cable remains coiled above the drop location at completion of installation.

M. Except as otherwise shown on the drawings, each modular furniture and fixed wall outlet shall include two (2) 4-pair Cat-5 cables for data applications, terminated on Cat-5 compliant jacks, and

one (1) 4-pair Cat-3 cable for voice applications, terminated on two (2) voice grade jacks per the drawing details. Other outlets shall be configured as shown on the drawing details.

N. Voice cable backboards shall be color-coded strictly per this Specification. Horizontal station cable backboards shall be blue; Riser backboards shall be green; Cross-connect backboards shall be white and include wire spool type cable management for cross connect routing as shown on the drawing details.

O. Telecommunications cabling system ground shall be single point, terminating at the Building Electrical Service Entrance Ground per the National Electrical Code. Grounding connectivity shall be in accordance with TIA/EIA TSB 67 and the National Electrical Code. Grounding for all voice riser cables, equipment racks, termination hardware, and related equipment shall be provided and placed by the Contractor.

P. Equipment racks, backboards, termination hardware, cable and wire management hardware, cable labeling, grounding conductors and termination, and all other ancillary equipment required to provide a complete and working telecommunication system shall be provided and installed.

Q. Upon completion of installation of conduit, cable, and other components, Contractor shall firestop all penetrations through fire-rated barriers, panels, walls, floors, ceilings, and other partitions. Firestopping used must conform to an approved UL-listed firestopping system, and specific application of system components as set forth in an approved installation diagram. All system components, as well as specific UL-approved installation configuration diagram must be submitted prior to Contractor beginning any installation of cable, conduit, or other material. Any system submitted for installation must meet the codes and standards set forth below as a minimum. Contractor may exceed requirements if, in Contractor's judgment and with TxDOT or TxDOT's Representative acceptance, superior or more economical designs or materials are available for successful and continuous operation of the equipment as required by this Specification. Installed firestopping must meet requirements of applicable governing regulatory bodies and codes and must pass inspection by local authorities.

R. The entire cabling system shall be machine labeled with all cables numbered and terminated sequentially. The entire cabling system shall be tested and documented as specified herein and warranted to be free from defects in materials and workmanship and capable of transmitting standards based network applications regardless of protocol or network equipment manufacturer for a period of 10 years. Warranty period commences upon TxDOT's first use of complete installed system or upon TxDOT's written acceptance of completed installation, whichever occurs first.

S. Contractor shall prepare and submit record documentation and final As-Built drawings in both hard copy and electronic form as prescribed within the project specifications.

1.3 REFERENCE STANDARDS

The following codes and standards set forth the minimum requirements which may be exceeded by the Contractor if, in the Contractor's judgment and with TXDOTs' acceptance, superior or more economical designs or materials are available for successful and continuous operation of the equipment as required by this Specification:

A. The cable system shall meet the standards set forth in the American National Standards Institute / Electronic Industries Association / Telecommunications Industry Association recommended standards EIA/TIA-568-A, -569, -570, -606, -607, and EIA/TIA-TSB 67, 72.

B. All cables installed under this Specification shall be Underwriters' Laboratories (UL) listed and certified to pass the appropriate UL test for cable designated for installation in plenum and riser spaces per application.

C. The telecommunication cable system shall conform to all local codes and ordinances set forth by local jurisdictions as well as applicable sections of the National Electrical Code, NFPA-70-1996.

D. Firestopping shall be in accordance with ASTM E 814, ASTM E 136, and UL 1479 as well as Section 300-21 of the National Electrical Code.

E. Other applicable standards:
ANSI C2-1996 National Electrical Safety Code.
1. UL 497 Electrical Grounding and Bonding Equipment.
2. IEEE 802.2 Logical Link Control,
3. IEEE 802.3 Carrier Sense Multiple Access With Collision Detection,
4. IEEE 802.5 Token-ring.
5. FCC Rules and Regulations, Part 68.
6. All local codes as adopted by local governmental bodies and the State of Texas
7. Basic, Uniform, and Standard Building Codes (BOCA, ICBO, SSBC).
8. REA Cable Designations - PE Series Specifications
9. NFPA 101 - Life Safety Code.

1.4 CONTRACT DRAWINGS AND SPECIFICATIONS

A. The intent of the drawings and specifications is to establish the type of system and functions, but not to set forth each specific item essential to the functioning of the system. The drawings are generally diagrammatic and show approximate location and extent of work. In case of doubt of work intended, it is the responsibility of the Contractor to request instructions from TxDOT or TxDOT's Representative. The Contractor shall be responsible for installing a complete functioning system.

B. Contractor shall review all drawings and specifications before commencing work. Where discrepancies occur, Contractor shall immediately notify TxDOT or TxDOT's Representative for clarification.

1.5 SUBMITTALS

A. Prior to ordering any material, provide two (2) copies of complete brochure information on all products for installation on this project. All brochures and specification sheets shall be bound within a three-ring loose leaf binder and organized in the same manner as the Products portion of the Specifications. If more than one product is listed on the same page of the brochure or specification sheet submitted, the intended product or part number shall be clearly indicated or highlighted by the Contractor.

B. Contractor shall submit Proposed Test Procedures and a sample of the printout or test result form, as well as a list of all Test Equipment to be used for cable testing.

C. Contractor shall submit a Proposed Labeling and Cable Identification Scheme describing the outlet labeling, patch panel labeling, fiber patch panel labeling, voice termination labeling, and all cable end labeling procedures and samples.

D. Contractor shall submit all Proposed Firestopping System plans and methods for approval prior to beginning the firestopping portion of the work.

1.6 RECORD DRAWINGS

Contractor shall maintain one set of drawings on site to continually and accurately record the as-constructed work. The mark-up drawings shall accurately indicate locations of all equipment, pull-boxes, conduits, cable types, cable routing, cable labeling, outlet locations, and outlet labeling. All record drawings shall be maintained and updated daily and made available for inspection at any time during the course of the work by TxDOT or TxDOT's Representative. At project completion Contractor shall deliver drawings and documentation of the project, in both hard copy and in AutoCAD V12 or later format, to minimally include:

A. As-built connectivity diagram indicating pathways and utilization of ductbank system for fiber optic cable connectivity.

B. As-built telecommunications floor plans of the facility with entire contracted cable and outlet placement clearly depicted.

C. As-built elevations of all termination fields describing cable and outlet location labeling scheme.

D. As-built logical riser diagram describing connectivity and cable sizes for both telecommunications and grounding cabling systems.

E. Cable test results submitted in both hard copy and magnetic format along with viewing software from the tester manufacturer. Hard copy to be bound within loose-leaf binder neatly organized according to the test type and medium as identified in the Testing portion of this Specification.

2.0 PRODUCTS

A. Materials and equipment provided must be new products of manufacturers regularly engaged in the production of such products.

B. Products must be UL listed where a UL test procedure is applicable.

C. Substitutions of any equipment from the Approved Manufacturers listing of each product must be approved by the TXDOT Information Systems Division person assigned to this Project. Requests for substitutions must be submitted in writing and state which component is being requested for substitution, and include supporting documentation proving equivalency to all parameters of listed components.

2.1 TELECOMMUNICATIONS CABLES

A. Fiber Optic Cable

1. Either/or Single-mode and Multi-mode Fiber Optic Cable shall be used to provide connectivity between buildings located on the same campus complex and between the hub room and wire closets located within the same building. All fiber optic cable shall be encased in code compliant plastic duct (Innerduct). From point to point, without splices unless splicing is approved in advance by TxDOT or TxDOT's representative.
2. Cables shall consist of multiple strands of 62.5/125-micron tight buffered fibers each with a color-coded buffer and central strength member.
3. Cable shall utilize a hard flouropolymer plenum rated outer jacket with individual fibers coated with a plenum secondary buffer.
4. Cables placed within riser shafts shall be UL-listed riser rated OFNR and meet NEC sections 770-51(b) as well as 770-53(b) for use in vertical runs in building riser shafts or from floor to floor.
5. Cables placed within plenums shall be UL-listed plenum-rated type OFNP, and meet NEC sections 770-51(a) as well as 770—53(a) for use in ducts, plenums, and air-handling spaces.
6. All cables shall comply with or exceed EIA/TIA-568, EIA/TIA-492AAAA, Bellcore, FDDI, and ICEA standards.
7. Approved Manufacturers:
   a. Optical Cable Corporation (OCC)
   b. Approved Equivalent

B. Multi-pair Copper Voice Riser Cable

Multi-pair Copper Voice Shielded Riser Cable shall be used to provide connectivity between buildings located on the same campus and from the Regulated Service Entrance to wire closets on each floor of a building. Cable shall be placed in RGS conduit where applicable. Other suitable cable support apparatus shall be provided where a part of cable run is not placed in conduit.

1. Cables that are placed between buildings shall have lightening protection on each end and be of the following type.
   Telephone Cable, _____ pair, 24AWG, Gel Filled for conduit placement or direct bury.
2. Cable shall be constructed of 24 AWG solid annealed and individually insulated copper conductors wholly surrounded by a corrugated aluminum shield bonded to the outer jacket. The insulated conductors shall be twisted into pairs of varying lengths to minimize crosstalk. The twisted pairs shall be coded using industry standard colors and bound into the drawing specified number of pair groups as per ANSI/ICEA S-80-576.
3. Cable shall be UL listed as type CMR (communications riser cable) as required per the installation environment for which it is placed and as outlined in the NEC Sections 800-51(a) and (b) respectively.
4. Approved Manufacturers:
   a. Lucent
   b. General Cable
   c. Essex Cable
   d. Approved Equivalent

C. Cat-5 Data Station Cables

1. Cat-5 rated 4-pair UTP Horizontal/Station cables shall provide connectivity from the hub room to each fixed wall and workstation outlet location as indicated on the project drwaings each outlet shall be served with the quantity of Cat-5 cables listed per the outlet legend described in the project drawings.
2. Cables shall be constructed of 24 AWG solid annealed and individually insulated copper conductors. The insulated conductors shall be twisted to form non-shielded pairs using standard telephone industry color codes. The outer cable sheath of all data station cables shall be blue.
3. Cables shall be type CMP rated as outlined in the NEC Sections 800-51(a). For plenum rated cables, the conductor insulation of all pairs shall be FEP or Teflon material.

4. Cables shall meet or exceed the minimum structural and electrical characteristics defined within ANSI/TIA/EIA-568-A for Cat-5 cables and shall be acceptable for IEEE 802.3 applications
5. Approved Manufacturers:
   a. Lucent
   b. Berk-Tek
   c. CommScope
   d. Approved Equivalent

D. Cat-3 Voice Station Cables
1. Cat-3 rated 4-pair UTP Horizontal/Station cables shall provide connectivity from the hub room to each auxiliary wire closet and fixed wall and workstation outlet location as indicated on the project drawings. Each outlet shall be served with the quantity of Cat-3 cables listed per the outlet legend described in the project drawings.
2. Cables shall be constructed of 24 AWG solid annealed and individually insulated copper conductors. The insulated conductors shall be twisted to form non-shielded pairs using standard telephone industry color codes. The outer cable sheath of all voice station cables shall be white.
3. Cables shall be type CMP rated as outlined in the NEC Sections 800-51(a).
4. Cables shall meet or exceed the minimum structural and electrical characteristics defined within ANSI/TIA/EIA-568-A for Cat-3 cables and shall be acceptable for IEEE 802.3 applications.
5. Approved Manufacturers:
   a. Lucent
   b. Berk-Tek
   c. CommScope
   d. Approved Equivalent

E. Cross Connect Wire
1. Contractor shall provide one Reel/Box (1000ft) of telephone cross-connect wire for installation of cross-connections by TxDOT.
2. Wire shall be solid, 24 AWG, two-pair, copper conductors insulated with industry standard color-coded PVC. Provide cross connect wire in reel containing one thousand feet (1000') of wire.
3. Cross Connect Wire shall be of the same manufacturer as Multi-pair Copper Voice Riser Cable manufacturer.

F. Grounding Conductor
   1. Bare stranded copper ground conductors shall be provided and installed by the Contractor as shown on the project drawings to provide a grounding system consistent with the 1996 National Electrical Code as well as EIA/TIA 607.
   2. Ground conductors shall be minimum 6 AWG between the Building Service Ground point and the hardware components located within the Laboratory hub room.

2.2 TERMINATION EQUIPMENT

Termination equipment shall be provided and installed by the Contractor. Mounting hardware and accessories typically required to provide a complete and working installation shall be provided and installed by the Contractor whether listed herein or not.

A. Fiber Optic Distribution Centers
   1. Self-contained 19" equipment rack-mounted 36-port or 72-port fiber optic patch/splice distribution centers shall be provided and installed in the hub room and in any auxiliary wire closets as indicated on the project drawings. Fiber distribution centers shall be loaded with 6-pack bulkhead panels and coupling plates accommodating ST style sleeves.
   2. Contractor shall provide and install all termination sleeves, mounting hardware, accessories, and cable management devices required to provide and install a working fiber optic termination and patching system.
   3. Approved Manufacturers
      a. Leviton
      b. Siecor
      c. Approved Equivalent

B. Cat-5 Patch Panels
   1. 19" equipment rack-mounted 48-port modular patch panels shall be provided and installed in the hub room and in any auxiliary wire closets as indicated on the project drawings. Patch panel shall be rated Cat-5 compliant (per ANSI/EIA/TIA-568-A) and shall utilize 8P/8C style non-keyed jacks with T568B pinout assignments and 110-type termination.
   2. Approved Manufacturer
      a. Panduit

C. Voice Punchdown Termination and Connecting Blocks
   1. Type 66M150 termination/wiring blocks for cross connecting between voice station and Riser cables shall be provided and installed within the hub room and any auxiliary wire closets as shown on the project drawings. 66M150 Style blocks shall be wall mountable and manufactured with standoff legs to allow cables to pass behind. All required connecting blocks (4-pair and 5-pair), and labeling strips shall be included.
   2. Approved Manufacturers
      a. Lucent
      b. Siemon
      c. Approved Equivalent

2.3 TELECOMMUNICATIONS WORKSTATION OUTLETS

A. Telecommunications Workstation Outlets shall be provided at the locations shown on the project drawings. Cabling of all telecommunications outlets is the responsibility of the Contractor. Outlets shall be configured, and labeled as depicted in the project drawings. One manufacturer shall supply all components for all outlet assemblies.

B. Voice/Data outlets will be of modular design. Faceplates and jack inserts shall be color coordinated per TxDOT's direction. Each outlet shall be configured with modular Cat-5 compliant 8P/8C jacks wired to the T568B pin assignment sequence and/or modular voice grade 6P/6C jacks wired to a "split-pair" USOC pin assignment per the project details.

C. Any unused faceplate ports shall have blank covers installed.

D. Approved Manufacturers
   1. Panduit
   2. Approved Equivalent

2.4 CABLE SUPPORT HARDWARE AND MOUNTING EQUIPMENT

Miscellaneous Equipment shall be provided and installed by the Contractor as described below and on the drawings. Mounting hardware and accessories typically required to provide a complete and working installation shall be provided and installed by the Contractor whether listed herein or not.

A. Plywood Backboards: Plywood backboards shall be 4' x 8' x ¾" grade CDX plywood mounted with the 8' length placed in the vertical position and securely anchored to wall with fasteners appropriate for the wall construction. Backboards shall be painted white with fire retardant paint as per local code requirements.

B. Termination Backboards: Voice components shall be mounted on Terminal Backboards per the project drawings. Contractor shall utilize Blue (183B1) backboards for station cable termination, Green (183B2) backboards for Riser cable termination, and White (187B1) backboards for all cross connections.

C. Plywood and Termination Backboard Cable Management shall be provided and placed by Contractor on all telecommunications backboards to provide effective routing of all telecommunications cabling. Contractor shall utilize D-rings, Wire Distribution Spools, and Cable Clamps as depicted on the accompanying project drawings.

D. Equipment Rack shall be provided and placed by Contractor as shown on the project drawings. Unit shall be self-supporting, floor-mounted and shall be manufactured of aluminum. Nominal equipment relay rack height shall be 84" and rack width shall be 19". Equipment rack shall conform to EIA Standard RS-310-C.
   1. Approved Manufacturers:
      a. Chatsworth Products
      b. Homaco
      c. Harris

d. Approved Equivalent

E. Relay Rack Cable Management: Contractor shall provide and install double-sided vertical and, in multiple equipment rack applications, horizontal Cable Management sections to effectively organize, strain relieve, and manage data station, and patch cables as detailed in the project drawings.
1. Approved Manufacturers:
   a. Chatsworth Products
   b. Homaco
   c. Ortronics
   d. Approved Equivalent

F. Ground Bars, Lugs, and Clamps: Where applicable, ¼" x 12" x 1" copper ground bars shall be installed on the telecommunications Backboard as shown on the drawings. Ground bars shall be mounted utilizing insulated standoffs. Copper grounding conductors shall be placed per the accompanying drawings to effectively bond each ground bar to the Building Electrical Service Entrance Ground. Equipment racks and any other telecommunications equipment requiring grounding shall be bonded to the nearest ground bar using industry standard grounding connectors or lugs as recommended by the respective equipment manufacturer.
1. Approved Manufacturers:
   a. Ground Bar - Newton Instruments Fig. 3059
   b. Approved Equivalent

G. Fiber Innerduct: Contractor shall provide and install non-metallic, corrugated, flexible innerduct manufactured specifically for routing of fiber optic cables. It shall exhibit low smoke generation and flame spread characteristics, and have a very high temperature service tolerance. Overall construction shall be of corrugated PVC material except where used in plenum environments, where the Contractor shall provide and install plenum rated, non-metallic, flexible corrugated raceway as per applicable codes.
1. Approved Manufacturers:
   a. Carlon
   b. Dura-line
   c. Approved Equivalent.

H. Surface Mounted Raceway
1. The raceway and all of its fittings and system components shall be nonmetallic, UL-listed with nonflammable self-extinguishing characteristics tested to comparable specifications of UL94V-0.
2. The raceway shall be a two-piece design with a base and a snap-on cover, or one-piece with a plastic hinged cover section. Total width shall be a minimum of 1.5" by 0.75" deep with an approximate thickness of 0.10". Each channel shall be of sufficient size as to adequately support the number of telecommunications cables required per the outlet configuration(s).
3. Transition fittings shall consist of tees, elbows, cover clips, end fittings, and drop ceiling connectors. Transition fittings shall be of the same Manufacture as the raceway, shall be placed per Manufacturer's recommendations and installation requirements, and shall be designed for the specific installation application where installed.
4. Approved Manufacturer:
   a. Wiremold

b. Panduit
c. Approved Equivalent

I. J-hook Assemblies: Contractor shall comply with the maximum fill and spacing requirements as specified herein and/or shown on the project drawings/notes. Contractor shall provide and install J-hook assemblies as required to meet spacing and fill requirements.
1. J-hook horizontal cable supporting hardware shall be UL listed. The J-hook shall provide a broad flat base for proper cable support, thereby reducing stress and bending of cabling.
2. Contractor shall attach appropriate J-hook fasteners for wall, stud, beam, or flange mounting to the supporting structure. Space fasteners to fall a maximum of 5' apart and no more than 4' from the final outlet destination turn point as shown on the project drawings.
3. Approved Product:
   a. Caddy CableCat Clips and Caddy supporting hardware
   b. Approved Equivalent

3.0 EXECUTION

3.1 INSTALLATION REQUIREMENTS

A. Contractor shall give notice to all entities requiring advance notification and comply with all regulations specified by all governing agencies having jurisdiction over the performance of the work.

B. Contractor shall coordinate with and abide by the construction schedule and sequencing as dictated by TxDOT or TxDOT's Representative. Storage and staging areas within the job site shall be as dictated by TxDOT or TxDOT's Representative.

C. Contractor shall provide and pay for all permits, labor, materials, equipment, tools, utilities, and services necessary for the proper execution and completion of the Telecommunications Cabling System.

D. Contractor shall maintain during construction and submit accurate record construction drawings as described in Section 1.5 Record Drawings within two (2) workdays after completion of construction.

3.2 INSTALLATION METHODS

Contractor shall provide and install telecommunications cabling system as detailed by the project drawings, notes, details, specifications, and addenda if so issued. Where specific equipment and cable layouts are provided, it is the Contractor's responsibility to install as specified or provide complete information justifying alternatives prior to beginning work on affected portions of the project.

The following prescribes methods, which shall define a minimum level of quality to be maintained throughout the project. By prior written agreement with TxDOT, the Contractor may exceed this level of quality; however, the project schedule, budget, and function of the delivered system must be maintained while doing so.

A. Use the maximum possible bending radius on all cables during installation. A radius of curvature greater than the minimum bending radius of the cable per the manufacturer's specifications shall be maintained at all times.

B. Where placed within conduit, all cables shall be continuously lubricated during the pulling-in process. The maximum pulling tensions specified by the cable manufacturers shall not be exceeded. Monitor cable-pulling tension with a mechanical tension-meter.

C. Contractor shall use tools and equipment specifically designed for each installation task. The Contractor shall utilize installation practices, which ensure the highest quality installation. Contractor shall perform all cutting, splicing, pulling and termination of cables using equipment specifically designed for that purpose.

D. Contractor shall install tie wraps using a tension-controlling cutting device. Tension shall not exceed that which is specified by the manufacturer of the cable as being deleterious to the specified performance of the cable. Tie wraps and other securing hardware shall be rated as required for the installation environment.

E. Contractor shall fill conduit with cables with the following guidelines:
   1. Where conduits are stacked, the cabling system Contractor shall fill the bottom raceway to its maximum fill ratio first and then move to the next raceway above it and so on.

   2. Where multiple conduits are being used, the Contractor shall fill one conduit to its maximum fill ratio before going on to the next conduit. The cabling system Contractor shall leave as many spare conduits available as possible and under no circumstance shall the Contractor leave less than one spare conduit available.
   3. The maximum fill ratio for all conduits shall be 40%.
   4. The Contractor shall not exceed the maximum fill ratio, per the NEC, for any reason.
   5. All spare conduits shall have two (2) pull strings installed and left for future pulling in of cable. The pull strings shall be clearly labeled on each end as "Pulling Line Number 1 and Pulling Line Number 2," and each end shall be clearly labeled to indicate the location of its corresponding opposite end.

F. Contractor shall support cables running overhead that are not installed in raceway or conduit by approved load dispersing “J” hook assemblies, spaced a maximum of 5 feet from each other.

G. Install raceways or conduit system completely before pulling-in cables. Clean interior of each run of conduit before pulling-in cable.

H. Penetrations through walls and floors shall maintain fire resistance rating, per NEC 300-21.

I. Install connectors in conformance with manufacturer recommended stripping and crimping procedures. Use special tools designed for this purpose.

J. Termination onto patch panels and punch-down onto termination blocks of all station cables shall be in consecutive, as-built, numerical sequence from top to bottom and left to right without skipping any ports or positions. Where applicable, floor number will comprise the high order number of the sequence.

K. Cat-5 installation shall conform strictly to EIA/TIA-568-A and TSB-40B to insure a quality system that meets the transmission rate criteria.

L. Labeling of all telecommunications components shall be as described within the accompanying project drawings and Section 3.5 “Labeling Methods” of this Specification Document. Labeling shall be mechanically produced not handwritten.

3.3 FIBER OPTIC CABLE INSTALLATION

A. The fiber optic cable raceway must be continuous between fiber distribution cabinets. The protective innerduct raceway system must enter and be secured to enclosures.

B. The fiber optic raceway system shall be routed with largest bend radius possible. Bends in the fiber optic raceway system shall be accomplished with large radius pre-formed ells. Field bending shall be in accordance with NEC minimum radii requirements. Use only equipment specifically designed for the material and size involved.

C. The entire fiber optic raceway system shall be complete and the raceway interior cleaned prior to the installation of the fiber optic cables.

D. Securely fasten the fiber optic cables or raceway to the cable tray, or walls when routed inside buildings, using clamps and clips designed for this purpose.

E. Provide a nylon or polyethylene pulling line in all fiber optic raceways. Clearly label as "pulling line", indicating source and destination.

F. Openings around fiber optic raceway penetrations shall maintain the fire resistance rating as required in Section “Firestopping” of this Specification.

G. All fiber optic cables are to be run as efficiently as possible, minimizing the length of cable required.

H. All fiber optic cables shall be continuously lubricated during the pulling-in process. The maximum pulling tensions specified by the cable Manufacturers shall not be exceeded. Monitor cable-pulling tension with a mechanical tension meter.

I. The fiber optic cables passing through pull boxes shall be neatly arranged to afford maximum clearance between the several cable types within the box.

J. As fiber optic cables emerge from intermediate-point pull boxes, coil the cable in a figure eight pattern with loops not less than two feet in diameter.

K. Label all fiber optic cables at both ends. The label shall be permanent. Labels shall be produced by mechanical means, (not handwritten) and individual number strips are unacceptable. All cable labeling shall include numeric designation, source, destination, and cable type.

L. Fiber optic raceways shall be clearly marked with "CAUTION Fiber Optic Cable" markers on the outside at each pull box, indicating type and number of cables within.

M. If connectors have been factory installed on fiber optic cables, protect the connector during pulling-in by wrapping with a thin layer of foam and insert in a stiff plastic sleeve for protection.

3.4 FIRESTOPPING

A. For the purposes of this section the following definitions shall apply:
1. Firestop System means a specific construction consisting of any device intended to close off an opening or penetration during a fire and/or materials that fill an opening in a wall or floor assembly where penetration is by cables, cable trays, conduits, ducts, pipes and any poke through termination device, such as electrical outlet boxes along with their means of support through the wall or the floor opening. (Ref: ASTM E-814)
2. Listed System Design means an informational listing by an Accredited Testing Agency developed from Firestop Systems Reports depicting the correct use and installation of firestop materials. These published listings contain drawings depicting geometry, minimum/maximum dimensions for all the individual components tested including penetration item type and size, annular space, insulating materials used, substrate types and thickness, sealant types and thickness, etc.
3. Fire Resistance Rating means the time in hours or fraction thereof that a material or assembly of materials will withstand the passage of flame and the transmission of heat when exposed to fire under specified conditions of test and performance criteria, or as determined by extension of interpretation derived therefrom as prescribed in the National Building Code.
4. Service Penetration means any hole or void created in the faces or edges of Fire Separations or Firewalls for Mechanical and Electrical through penetrations or poke through termination devices and/or other building services.

5. Firestop Material means any material used individually or as a component to create an ASTM E-814 Firestop System.

B. Work Included in Firestopping
1. Work of this section comprises firestop materials and listed systems designs intended to act as firestop systems and smoke seals at openings around penetrations, at unpenetrated openings, at projecting or recessed items, and at openings and joints within and around fire separations and firewalls.
2. All plans involving the installation of the various firestopping systems must be submitted to and approved by TxDOT or TxDOT Representative prior to beginning the firestop systems portion of the work.
3. Cable shall at no point pass through an unsealed penetration through a fire-rated barrier.
4. Contractor shall provide seals approved by the UL in all fire rated separations and firewalls to form tight barriers to retard the passage of flame and smoke.
5. The installed seals shall provide and maintain the fire resistance rating of the adjacent floor, wall or other fire separation assembly to the requirements of ASTM E-814 and acceptable to authorities having jurisdiction and the Engineer.
6. Provide the work using competent installers, experienced in the application of the materials and systems being used, approved and trained by the material or system Manufacturer.

7. Firestop systems shall conform to the (F) and (T) ratings of ASTM E-814 and other local requirements of authorities having jurisdiction.

3.5 LABELING METHODS

A. General: Labeling shall be machine produced or typewritten, self laminating, indelible, and shall be permanently affixed to patch panel ports, termination blocks, and outlet locations, as well as all station and data riser cable ends. Handwritten labels will not be accepted. Contractor shall confirm final, as-built numbers with TxDOT or TxDOT's Representative prior to labeling. Proposed labeling scheme shall at a minimum meet the following criteria.

B. Labeling of all components within the hub rooms shall be in sequential order.

C. Outlet labels shall provide reference to the final, as-built outlet location and station position. Contractor shall clean outlet faceplates of all dirt and dust prior to applying labels. Provide "Voice" and "Data" descriptors or icons on the proper jacks.

D. Station Cable Labeling: Each station cable label shall possess characters describing the serving patch panel and port position, or serving termination block and position, and the destination room number and station identifier.

E. Voice Riser Cable Labeling: Each voice riser cable shall possess characters describing both the serving termination block and position, and destination termination block, and position.

F. Patch Panel Labeling: Each station patch panel port label shall possess characters describing the final, as built room number within which the outlet is located as well as the specific station identifier. Patch panels shall be numbered consecutively from top patch panel in rack to bottom patch panel in rack.

G. Termination Block Labeling: Each station termination block label shall possess characters describing the final, as built, room number within which the outlet is located as well as the specific station identifier. The positions shall be labeled in consecutive sequence from as-built, final room and station order.

4.0 TESTING AND QUALITY ASSURANCE

Contractor shall have installed similar systems in at least ten (10) other projects within the last five (5) years. Contractor shall submit evidence of compliance with this requirement prior to beginning work on the project.

Individual installers of cabling, components, and devices shall be certified through the Panduit Installer Certification Program. Contractor shall submit evidence of compliance with this requirement prior to any individual beginning work on the project.

A. The Contractor shall separately test and document the cables and terminations throughout the entire cabling system. The Contractor shall ensure that the installed cable and equipment is without flaw and that no damaged cable or equipment has been included in the installation.

TXDOT representatives shall be allowed to observe the testing of the installed cabling and terminations at any time during the testing process.

B. Acceptance of the installed Telecommunications Cabling System shall be based on the quality of Contractor performance by analysis/inspection of the testing program documentation and the conformance of the system operation with the criteria described herein. Contractor shall make available all drawings and documentation prior to acceptance testing.

C. Contractor shall provide all necessary testing equipment for performing the required acceptance test. Contractor shall verify the authenticity and display appropriate calibration data to include the expiration date of the correct calibration.

D. Contractor shall perform inspection of all products before installation and shall perform other inspections as necessary to assure that quality of performance conforms to specified requirements. Contractor shall perform timely quality assurance inspections throughout the duration of the project, including a pre-installation inspection and a final inspection. The pre-installation inspection shall be performed jointly by the Contractor and TxDOT or TxDOT's Representative a minimum of five (5) work days prior to beginning any work. The pre-installation inspection will, at a minimum, verify the conformance of all equipment to the requirements set forth by the drawings and Specifications and industry standards, site readiness, availability of Bill of Materials (BOM), and adequacy of equipment furnished by the Contractor.

E. The Contractor shall perform in-progress inspections regularly to verify conformance of the installation methods to the Scope of Work (SOW) and industry standards. The Contractor shall prepare an inspection checklist to facilitate an orderly inspection process and to insure that all installed components of the cabling infrastructure are examined before, during and after installation. Contractor shall provide one copy of each completed inspection checklist within one (1) workday after each inspection. Inspections during installation as well as a final inspection encompassing the entire installed system shall be performed prior to system acceptance by TxDOT or TxDOT’s Representative.

F. The Contractor shall correct, in a timely manner, any installation deficiencies or unacceptable equipment, based on a Contractor, TxDOT or TxDOT’s Representative quality assurance (QA) inspection. Contractor shall then perform re-certification of any affected portion of the installation. All quality assurance inspections are subject to verification by TxDOT or TxDOT's Representative.

G. The Contractor shall perform inspection of the project as a whole, assuring himself that the work on the project is ready for final acceptance, before calling upon TxDOT or TxDOT’s Representative to make a final inspection. Evidence during acceptance testing that such overall inspection has not been performed shall be grounds for rejection of installation and rescheduling of testing.

H. Testing of all installed telecommunications cabling systems shall be performed by the Contractor. Interim testing of the cabling systems during and after installation is encouraged to ensure that the following testing and acceptance criteria are met.

4.1 UTP COPPER CABLE SYSTEMS

A. All twisted pair cable shall be tested for continuity, crosses or grounds, and to ensure that pin-outs are in accordance with the drawings and these Specifications. Test results shall document each installed cable pair for pass/fail, problems encountered in the case of a failure, and the procedure required to result in a cleared pair. The results of the testing shall be furnished in printed format. All test documents shall be dated and signed by the personnel performing the testing. Hand-written test results are not acceptable.

B. Contractor shall perform final testing on the entire UTP voice copper cable system to demonstrate the acceptability of the project as installed. As a minimum, the Contractor shall perform and furnish documentation of the following tests:
1. Continuity.
2. Shorts/Crosses.
3. Grounds.
4. Opens.
5. Reversed Pairs.
6. Split Pairs.
7. NEXT Performance
8. Length
9. Attenuation Performance

C. Cat-5 End to End Link Performance shall be in accordance with the specification set forth in ANSI/TIA/EIA-568-A as well as meeting the documents' requirements for:
1. Cabling length and topology.
2. Component, performance and reliability.
3. Installation practices.

C. All Cat-5 wiring shall be tested to indicate a minimum of 100 Mbps transmission capability. Test results shall document each installed cable pair for measured attenuation and Near End Cross Talk (NEXT), problems encountered in the case of a value being unacceptable, and the procedure required to result in a compliant link. Cat-5 testing shall use an approved Cat-5 testing device for validation of performance. Each cable pair tested shall meet the following link performance requirements from the Hub Room termination to the outlet port as set forth in the ANSI/TIA/EIA-568B:

D.

CATEGORY FIVE END TO END LINK PERFORMANCE		
Frequency (MHz)	Maximum Attenuation (dB)	Maximum NEXT (dB)
1	2.2	-54.5
4	4.7	-59.5
10	7.0	-44
16	8.76	-40.5
20	10.0	-38.5

100	23.5	-27

4.2 FIBER OPTIC CABLE

A. The fiber optic cable shall be acceptance tested by the Contractor prior to installation. An optical time-domain reflectometer or Power Source/Light Meter with printer output shall be used to generate a baseline performance test. The Contractor shall return, at his or the Manufacturer's sole expense, any span of fiber optic cable identified as noncompliant based on the results of this test. A copy of the baseline test of all fiber spans shall be provided to TxDOT or TxDOT's Representative for comparison to the final installed cable OTDR or Light Source and Power Meter test results to be performed upon completion of the installation.

B. Standard tests for correct fiber identification and termination shall be performed by the Contractor during the installation to ensure proper installation and cable placement. TxDOT and/or TxDOT's Representative may, at their discretion, perform tests in addition to those specified herein. The party conducting the test shall document all testing accomplished. The test results shall be furnished to all involved parties.

C. A final test of the working installed fiber optic system shall be performed to demonstrate the acceptability of the project as installed. Testing shall be performed in accordance with a test plan supplied by the Contractor and approved by TxDOT or TxDOT's Representative. The Contractor shall furnish all labor, equipment, and instruments required to conduct the test. Any defective workmanship or material shall be corrected by the Contractor and re-tested. As a minimum, final testing for the fiber optic cable system, including spare cable, shall verify the conformance of attenuation, length, and bandwidth parameters with the performance specifications. Testing shall be in accordance with EIA-455-53.

D. A calibrated optical Light Source and Power Meter such as Seicor's Optical Meter/Source Model #OTS/111D or equal shall be employed for the testing of signal strength and optical connectivity. Testing shall be performed and documented at 850nm and 1300nm in both directions on each strand of fiber installed.

E. The Contractor shall record all test results. Copies of test results shall be submitted to TxDOT or TxDOT's Representative for review prior to consideration of acceptance.

F. The tested actual loss value shall be compared to the theoretical loss calculated using the following attenuation criteria:
   1. ST Type connectors (per mated pair):
      Multi-mode - 0.5dB.

   2. Fiber Cable
      Multi-mode - 3.75dB/km @ 850nm
      1.5dB/km @ 1300nm

G. The Contractor shall calculate the theoretical loss using installed cable lengths, compare and contrast this loss with the actual measured loss for each fiber, and submit these test results and comparisons for TxDOT or TxDOT's Representative review.

H. If the actual loss exceeds the theoretical loss then the fiber shall be considered as having not passed the acceptance criteria. Contractor shall perform the following further actions until acceptable test results are obtained:
   1. Re-test to insure accurate readings from the first test.
   2. Replace the defective fiber optic cable.
   3. Each strand of each cable shall be tested from each end at both 850nm and 1300nm using a Light Source and Power Meter

4.3 TESTING DELIVERABLES

Within ten (10) days of completion of testing all cabling systems, Contractor shall submit two (2) copies of the fiber, general copper, and Cat-5 test results as described in the Testing portion of the Specifications in both hard copy and electronic format. The hard copies shall be submitted in an orderly and typewritten format, bound, and separated by test type using dividers.

4.4 WARRANTY

In addition to guarantee of equipment by manufacturer(s), the Contractor shall also guarantee equipment. Such guarantee shall include tests, adjustments and/or replacements of defective equipment, materials, and workmanship for a period of ten (10) years from the date of acceptance of the project as complete by TxDOT or TxDOT's Representative.

- End of Section -

SECTION 16722
GAS MONITORING SYSTEM

PART 1 - GENERAL

1.1 GENERAL OPERATION

A. The Gas Monitoring System (GMS) shall operate as stand alone system(s). The monitors shall be engineered to continuously monitor for the presence of propane gas. When gas concentration surpasses the preset limit in any sensor module in a zone, audible alarm indication and relays shall be activated for that particular zone. Sensor reaction shall be instantaneous; however alarms shall be capable of being delayed dependent on user preference, and dedicated flashing warning lights for visual indication and low mounted side wall exhaust fans for propane gas evacuation shall be immediately activated.

B. The preset limit for activation shall be 20% LEL (lower explosive limit) for propane gas.

1.2 SCOPE – Install the following in accordance with the engineering drawings:

A. Gas detection monitor panels (with built-in audible alarm), sensors, flashing warning lights and dedicated exhaust fans.

B. All associated electrical equipment and materials – conduit, wiring, switches, relays, etc.

1.3 RELATED SECTIONS

A. Section 16123 – Building Wire and Cable

B. Section 16130 – Raceways and Boxes

C. Section 16010 – Basic Electrical Requirements

1.4 REFERENCES

A. NFPA 70 – National Electrical Code.

B. NFPA 58 – Liquefied Petroleum Gas Code

C. NFPA 72 – National Fire Alarm Code

1.5 SUBMITTALS

A. Product Data: Provide manufacturers data on all equipment and components described herein.

B. Submittal shall include Manufacturer's Installation Instructions and complete system wiring and central control station schematics.

1.6 OPERATION AND MAINTENANCE DATA

A. Calibrate monitoring system per manufacturer’s recommendations.

1. The manufacturer’s authorized technical representative shall be present during all tests and inspections. The manufacturer’s authorized representative shall provide supervision of final connections to the system panel, perform a complete functional test of the system and submit a written report to the contractor attesting to the proper operation of the completed system. This report shall be a part of the final documents submitted to the owner.

B. The manufacturer's authorized representative shall perform an eight (8) hour training session where the representative shall instruct and train a minimum of six (6) TxDOT personnel and, if applicable, local Fire Department personnel in the operation of the system. At the training session, the manufacturer's authorized representative shall provide a complete written operating and maintenance manual that clearly describes the system, its operation, and any maintenance requirements. It shall also have a clearly understandable maintenance schedule and a complete parts list for all components of the system(s).

1.7 DELIVERY, STORAGE, AND HANDLING

A. Deliver, store, protect and handle products to site under provisions of the Uniform General Conditions and Special Conditions.

1.8 EXTRA MATERIALS

A. Monitoring system Calibration Kit.

B. Furnish under provisions of the Uniform General Conditions and Special Conditions.

PART 2 - PRODUCTS

2.1 MANUFACTURERS

A. Gas Monitoring Equipment:

1. Armstrong Monitoring Corporation
2. BW Technologies
3. Enmet Corporation
4. Thermo Gas Tech
5. Rel-Tek Corporation
6. Approved equal

2.2 GAS MONITORING SYSTEM

A. Monitoring Panel:

B. Shall be enclosed in a NEMA 12 cabinet.

C. Dual DPDT 10 ampere relays for alarm actuation and control of ventilation equipment and/or auxiliary alarms.

D. LED's indicating power on, low and high alarms, fail, plus a user selectable audible indicator capable of being silenced for high alarm.

E. Test sequence activated by single push button.

F. Alarms shall be equipped with user selectable time delays whereby, when chosen, low and high alarm conditions must prevail for five and ten minutes respectively before activation occurs.

G. Alarms shall be equipped with dead bands which require gas levels to decline slightly below the original trip point before alarms will automatically reset.

H. Sensors:

1. Multi-drop propane gas sensor compatible with Monitor Panel.

I. Strobe (Warning) Light:

1. 120 VAC amber strobe light. See drawing schedule.

J. Alarm annunciator:

1. Annunciators in office areas shall be red in color, shall be clearly audible, well above a normal sound level, and shall be of such a size that it is inobtrusive in the environment.
2. Annunciators in exterior areas shall be red in color, and shall be clearly audible across the compound, well above a normal sound level.

PART 3 - EXECUTION

3.1 INSTALLATION

A. GMS shall be installed in accordance with manufacturer's instructions, NFPA 58, local codes, the National Electric Code (NEC) and the engineering Drawing. See Drawing for locations.

B. Monitor – Bottom of monitor panel shall be mounted on wall 48" above floor.

C. Sensors – Shall be mounted on wall 18" above floor. All wiring shall be run in conduit with no exposed wiring.

D. Strobe Warning Light – Shall be mounted on wall 10 feet above floor. All wiring shall be run in conduit with no exposed wiring.

E. Alarm Annunciators – Shall be mounted on wall 10 feet above floor (or just below ceiling in office areas). All wiring shall be run in conduit with no exposed wiring.

F. Side wall exhaust fans shall be wired into the GMS and set to activate set upon detection of LP gas. See drawings for fan locations.

END OF SECTION

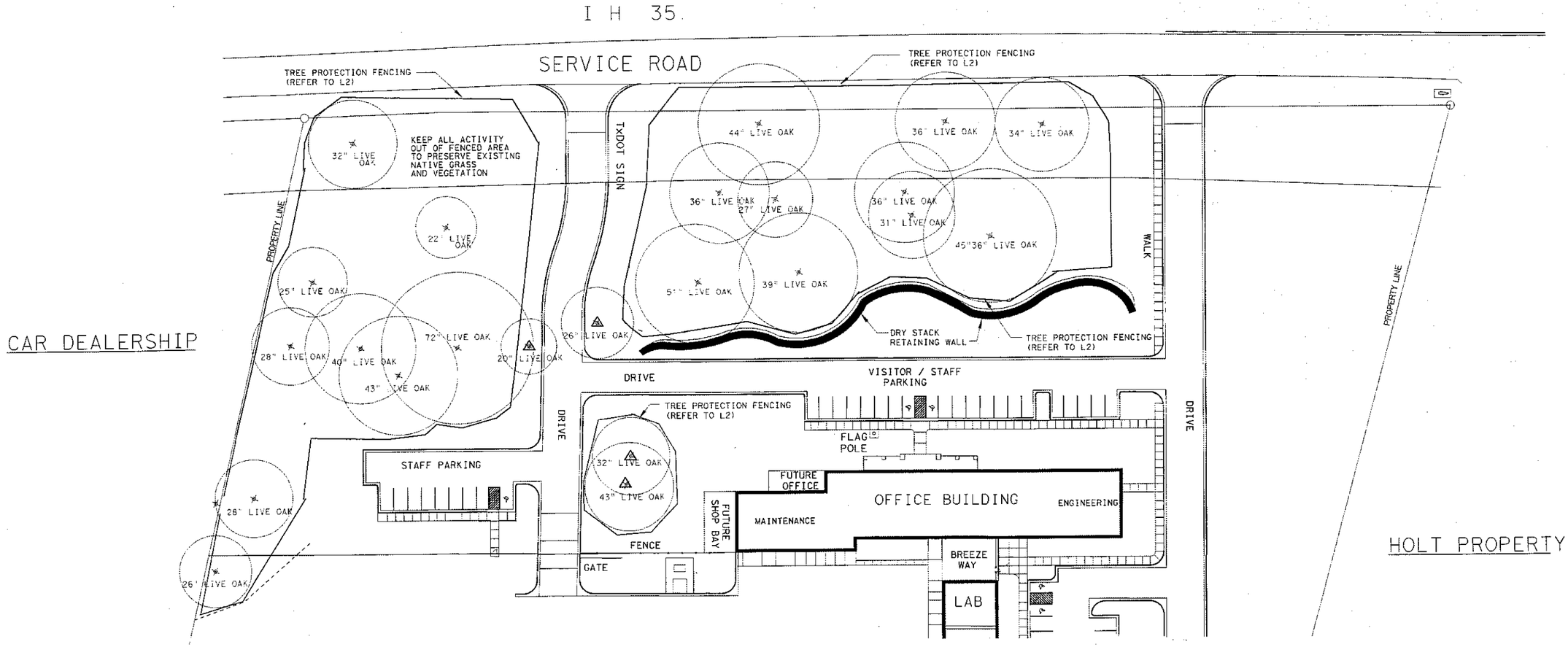

LEGEND

——— PROTECTIVE FENCING - REFER TO L2

△ BOUND WOOD PLANKING AROUND TREE TRUNKS

- - - - AREA TO PRESERVE EXISTING NATIVE GRASSES AND VEGETATION

NOTE:

1. PRESERVE EXISTING VEGETATION AND GRASSES IN AREAS THAT ARE NOT WITHIN THE LIMITS OF GRADING, PAVING, SLAB, AND UTILITY WORK, AS SHOWN IN THE PLANS.
2. USE CONSTRUCTION FENCING THAT IS APPROVED BY THE ARCHITECT.
3. REFER TO "TREE PROTECTION DETAILS" SHEET.
4. LOCATE NEW RET. WALL OUTSIDE TREE DRIPLINE PER LANDSCAPE ARCHITECT DIRECTIONS.
5. IN CASE OF DAMAGE TO EXISTING TREES, VALUE WILL BE ASSESSED AT $150.00 PER CALIPER INCH. DAMAGES WILL BE DEDUCTED FROM CONTACT AMOUNT.

TREE PROTECTION PLAN

0 20 40 60 80 100
SCALE IN FEET

Texas Department of Transportation
125 E. 11th Street
Austin, Texas 78701-2483
(512) 416-3048
Copyright © 2005 Texas Department of Transportation

03/23/05
REGISTERED LANDSCAPE ARCHITECT
KENNY D. BLACKMON
1251
STATE OF TEXAS

AREA ENGINEERING AND MAINTENANCE FACILITY
AUSTIN, TRAVIS COUNTY
AUSTIN DISTRICT 14

Revisions
△
△
△
△

Drawn by: KB
Project No. 470400238
Date 3/23/05
Sheet No. L1
of **sheets**

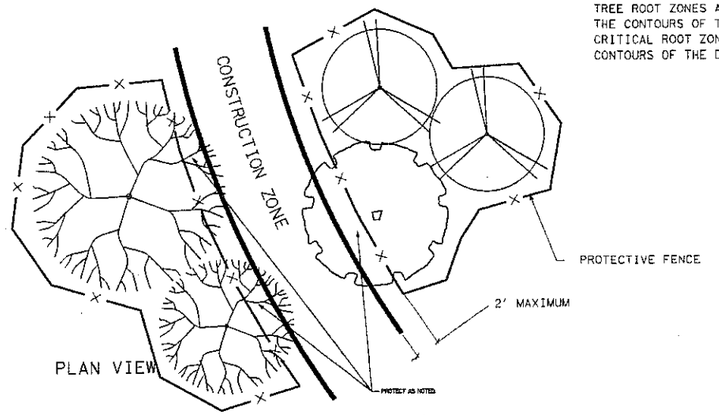

LINEAR CONSTRUCTION THROUGH STAND OF TREES

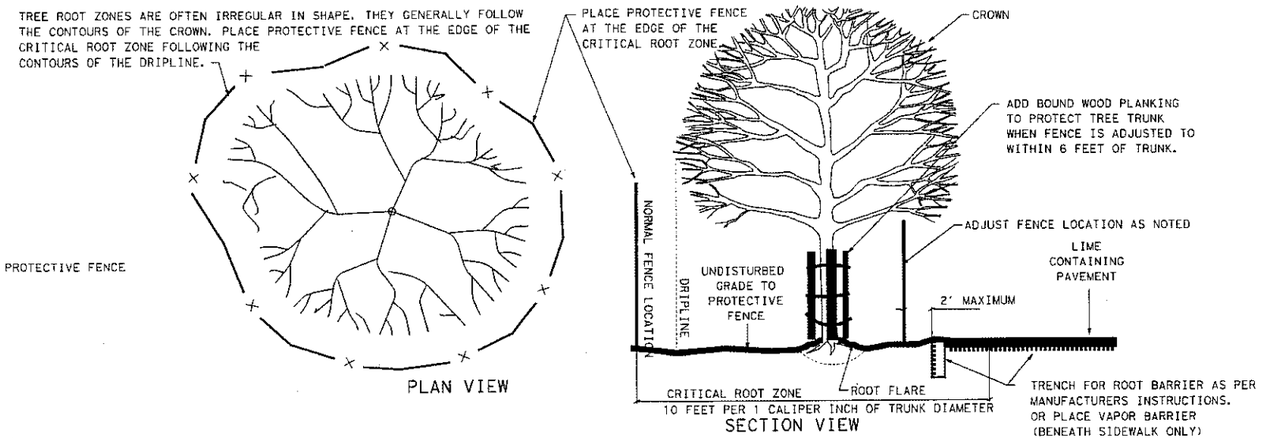

TYPICAL TREE PROTECTION

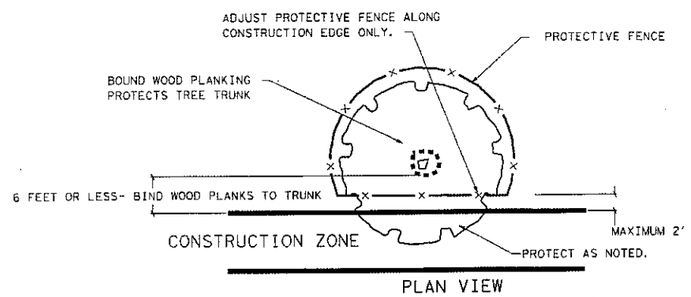

PAVING UNDER TREES

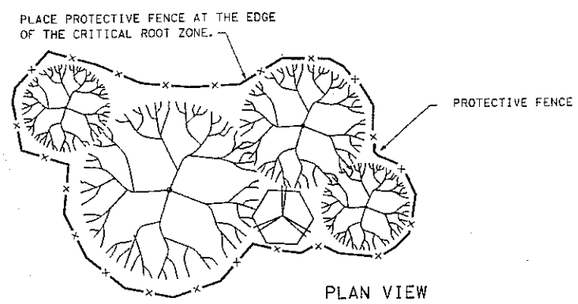

TYPICAL TREE GROUPING PROTECTION

NOTES:

DETAILS AND NOTES ON THIS SHEET APPLY TO ALL TREES IDENTIFIED FOR PROTECTION ELSEWHERE IN THE PLANS OR BY THE ENGINEER.

CRITICAL ROOT ZONE (CRZ) =10 FEET PER 1 CALIPER INCH OF TRUNK DIAMETER.

CONSTRUCTION IMPACT MITIGATION:

TREES IMPACTED BY CONSTRUCTION ACTIVITIES SHALL BE WATERED DEEPLY ONCE A WEEK DURING PERIODS OF HOT DRY WEATHER AS DEFINED BY THE ENGINEER. SPRAY CROWNS WITH WATER MONTHLY IF NEEDED TO REMOVE HEAVY ACCUMULATIONS OF DUST.

PROTECTIVE FENCE:

PLACE 4 FEET HIGH PROTECTIVE FENCE AT THE EDGE OF THE CRITICAL ROOT ZONE OF ALL TREES. NO EXCAVATION, FILLING, SOIL COMPACTION, PARKING OR EQUIPMENT STORAGE IS ALLOWED WITHIN THE FENCED AREA.

WHERE RIGHT OF WAY WIDTH IS INADEQUATE THROUGHOUT THE CRITICAL ROOT ZONE SO THAT A CONSTRUCTION ZONE PARTIALLY OVERLAPS THE ROOT ZONE, PLACE FENCE WITHIN 2 FEET OF CONSTRUCTION ZONE.

TRUNK PROTECTION:

WHEN A PROTECTIVE FENCE IS ADJUSTED, PLACE THE FENCE AS FAR AS POSSIBLE FROM THE TREE TRUNK.

WHERE ADJUSTMENT RESULTS IN A PROTECTIVE FENCE BEING CLOSER THAN 6 FEET FROM A TREE TRUNK, THE TREE TRUNK SHALL BE PROTECTED WITH STRAPPED ON PLANKING TO A HEIGHT OF 10 FEET, OR THE HEIGHT OF THE LOWEST MAJOR BRANCHING, WHICHEVER IS LESS.

ROOT ZONE PROTECTION:

COVER UNPROTECTED PARTS OF THE ROOT ZONE BEYOND THE PROPOSED CONSTRUCTION ZONE WITH 3 INCHES OF MULCH OR SMOOTH GRAVEL TO MINIMIZE COMPACTION.

WHEN CONCRETE OR LIME STABILIZED BASE IS PLACED DIRECTLY ADJACENT TO OR CROSSING INTO THE ROOT ZONE OF A TREE, USE PLASTIC VAPOR BARRIER BENEATH SIDEWALKS OR SOLID VERTICAL ROOT BARRIER ALONG THE EDGE OF ADJACENT CONSTRUCTION AS SHOWN IN THE PLANS.

WHERE SHOWN ELSEWHERE IN PLANS, SUBSTITUTE DRY LAID LANDSCAPE PAVERS FOR CONCRETE SIDEWALK WITHIN THE CRITICAL ROOT ZONE.

VEHICULAR TRAFFIC, STOCKPILING OR STORAGE OF MATERIALS, PARKING OF EQUIPMENT AND REFUELING EQUIPMENT IS PROHIBITED IN PROTECTED AREAS.

BORING, TRENCHING, GRADING, AND PRUNING:

WHERE SHOWN ELSEWHERE IN PLANS, PROPOSED UNDERGROUND UTILITIES CROSSING UNDER PROTECTED AREAS SHALL BE BORED BENEATH CRITICAL ROOT ZONES. BORES SHOULD AVOID CROSSING DIRECTLY BENEATH ROOT FLARE. BORES SHALL BE A MINIMUM OF 4 FEET BELOW EXISTING GRADE.

NO TRENCHING, EXCAVATION, FILLING, OR COMPACTION IS ALLOWED WITHIN THE CRITICAL ROOT ZONE EXCEPT AS SPECIFICALLY IDENTIFIED IN THE PLANS AND APPROVED BY THE ENGINEER.

WHEN GRADE MUST BE CUT WITHIN THE CRITICAL ROOT ZONE SAW CUT ROOTS TO THE DEPTH OF THE PROPOSED DISTURBANCE ALONG EDGE OF THE PROPOSED DISTURBANCE BEFORE EXCAVATION IS BEGUN.

ANY ROOTS EXPOSED BY CONSTRUCTION SHALL BE PRUNED FLUSH WITH THE SOIL. BACKFILL ROOT AREAS WITH GOOD QUALITY TOPSOIL AS SOON AS POSSIBLE. IF EXPOSED ROOT AREAS ARE NOT TO BE BACKFILLED WITHIN TWO (2) DAYS, THEY SHALL BE TEMPORARILY COVERED WITH A MINIMUM OF SIX (6) INCHES OF ORGANIC MULCH.

EXCEPT FOR WORK WITHIN THE LIMITS OF EXISTING AND PROPOSED ROADWAY PAVEMENT, GRADING WITHIN THE CRITICAL ROOT ZONE SHALL BE DONE BY HAND OR SMALL EQUIPMENT AND GRADE SHALL BE ALTERED NO MORE THAN FOUR (4) INCHES. NO SOIL DISTURBANCE IS ALLOWED ON THE ROOT FLARE UNDER ANY CIRCUMSTANCES.

ANY PRUNING TO PROVIDE CLEARANCE FOR STRUCTURES, VEHICULAR TRAFFIC, AND CONSTRUCTION EQUIPMENT SHALL BE PERFORMED BEFORE CONSTRUCTION DAMAGE MIGHT OCCUR. ALL PRUNING MUST BE DONE ACCORDING TO STANDARDS OF THE INTERNATIONAL ARBORIST ASSOCIATION.

DISINFECT PRUNING TOOLS WITH 70 PERCENT METHYL ALCOHOL OR CHLORINE SOLUTION BETWEEN EACH TREE.

WOUND REPAIR:

REPAIR ANY WOUNDS TO TREE TRUNKS AND LIMBS WITHIN 24 HOURS OF OCCURRENCE. TREATING OF WOUNDS MUST BE DONE ACCORDING TO RECOGNIZED, APPROVED STANDARDS OF THE INDUSTRY.

TREE PROTECTION DETAILS

Texas Department of Transportation
125 E. 11th Street
Austin, Texas 78701-2483
(512) 416-3048
Copyright © 2005 Texas Department of Transportation

REGISTERED LANDSCAPE ARCHITECT
KERRY O. NICKSON
STATE OF TEXAS
3/23/05

AREA ENGINEERING AND MAINTENANCE FACILITY
AUSTIN, TRAVIS COUNTY
AUSTIN DISTRICT 14

Revisions

Drawn by: KB
Project No. 470400238
Date 3/23/05
Sheet No. L2
of sheets

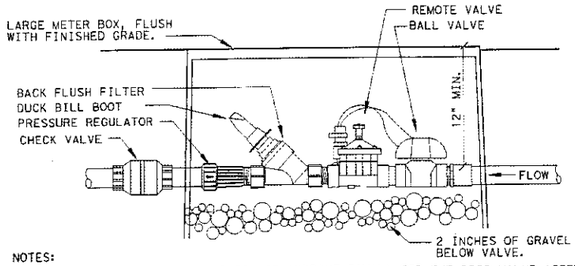

NOTES:

1. USE THE FOLLOWING COMPONENTS (OR APPROVE EQUAL) FOR THE DRIP VALVE ASSEMBLY:
   - RAINBIRD PEB VALVE
   - RAINBIRD AUTOMATIC BACK FLUSH FILTER WTIH 150 MESH FILTER SCREEN AND DUCK BILL BOOT
   - IN-LINE PRESSURE REGULATOR WITH A PRESET OUTLET PRESSURE OF 40 PSI,
   - SPRING LOADED CHECK VALVE
   - RAINBIRD FPT BALL VALVE ON THE UPSTREAM SIDE OF VALVE
2. ALL COMPONENTS IN DRIP VALVE ASSEMBLY MUST BE SAME DIAMETER SIZE AS VALVE.

DRIP VALVE ASSEMBLY

SECTION NTS

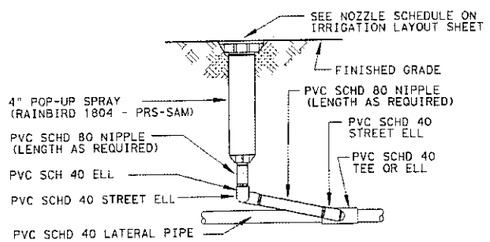

POP-UP SPRAY HEAD

SECTION (W/ RB-TSJ SERIES SWING JOINT) NTS

NOTES:

1. TOTAL OUTPUT OF EMITTERS SHALL NOT EXCEED 20 GPM PER SECTION.
2. COMBINED LENGTHS OF DRIP TUBING SHALL NOT EXCEED 250' IN ITS RUN BETWEEN CONNECTIONS TO PVC HEADER.
3. LOCATE EMITTERS NEAR THE BASE OF EACH PLANT.

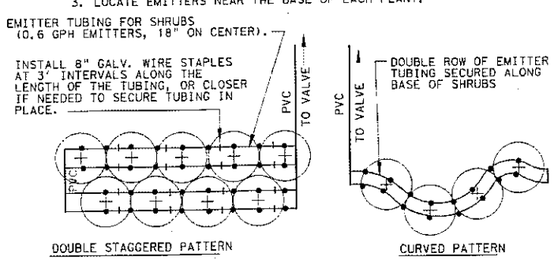

DRIP TUBING LAYOUT-SHRUBS

PLAN NTS

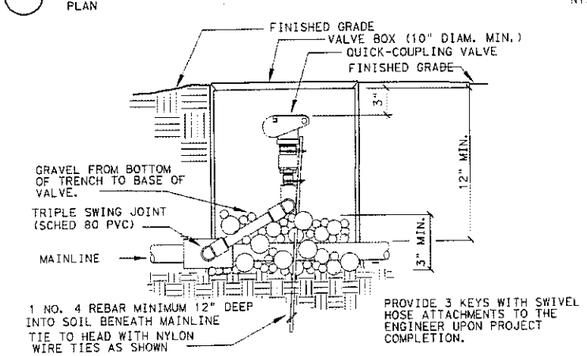

QUICK-COUPLING VALVE

SECTION NTS

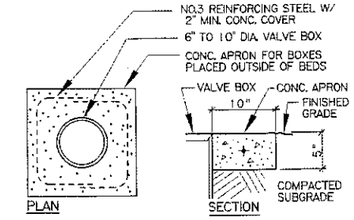

NOTE: VALVE BOXES PLACED OUTSIDE OF BED AREAS SHALL HAVE CONCRETE APRONS, 10" SIDE x 8" DEEP, SURROUNDING THE VALVE BOXES AT GRADE. ONE APRON MAY SURROUND TWO OR MORE BOXES, IF THEY ARE CLUSTERED TOGETHER.

CONCRETE APRON FOR VALVE BOXES

NTS

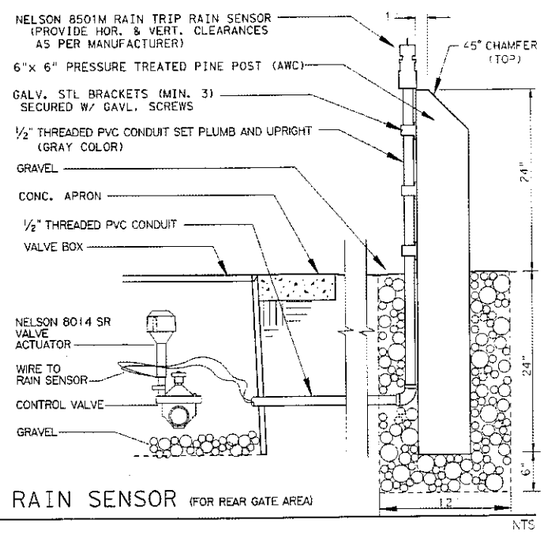

RAIN SENSOR (FOR REAR GATE AREA)

NTS

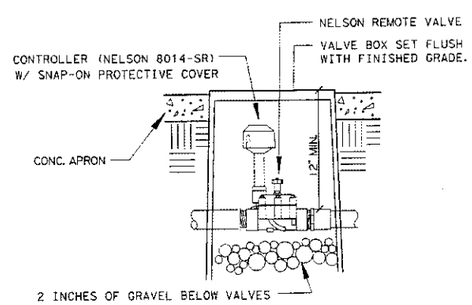

REMOTE VALVE AND BATTERY CONTROLLER

(FOR VEGETATIVE SCREEN AREA) NTS

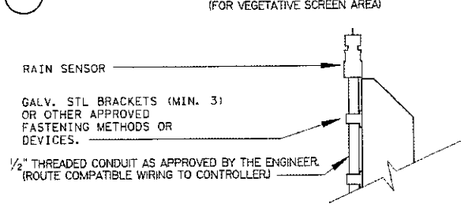

PROVIDE AND ATTACH IRRIGATION RAIN SHUT-OFF DEVICE TO THE STRUCTURE OR OTHER OBJECT, AS DIRECTED BY THE ENGINEER.

USE A RAIN SENSOR THAT IS COMPATIBLE TO THE CONTROLLER AND IRRIGATION SYSTEM AND ATTACH ACCORDING TO MANUFACTURER'S DIRECTIONS.

RAIN SHUT-OFF SENSOR

SECTION NTS

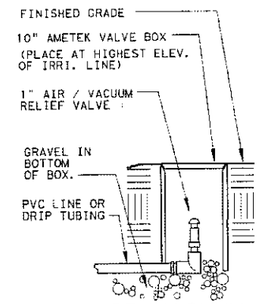

AIR/VACUUM RELIEF VALVE

SECTION NTS

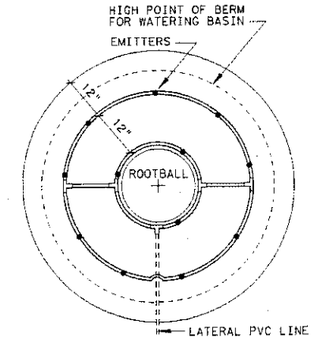

PLACE TREE DRIP LOOPS WITHIN THE WATERING BASIN.

DRIP TUBING LOOPS

PLAN (APPLY TO YAUPON HOLLY) NTS

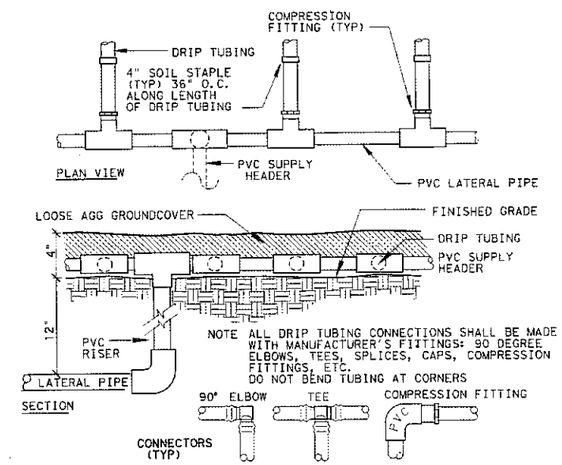

RISER DETAIL FOR DRIP IRRIGATION

- SUPPLY HEADER TO DRIP TUBING NTS

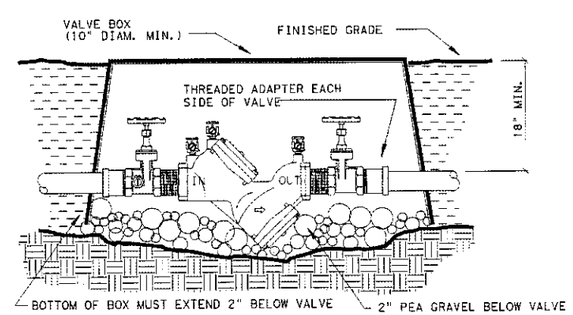

DOUBLE-CHECK VALVE

BACKFLOW PREVNTER N.T.S.

IRRIGATION DETAILS

Texas Department of Transportation
125 E. 11th Street
Austin, Texas 78701-2483
(512) 416-3048

Copyright © 2005 Texas Department of Transportation

REGISTERED LANDSCAPE ARCHITECT STATE OF TEXAS

03/23/05

AREA ENGINEERING AND MAINTENANCE FACILITY
AUSTIN, TRAVIS COUNTY
AUSTIN DISTRICT 14

Revisions

Drawn by: KB

Project No. 470400238

Date 3/23/05

Sheet No. L3

of sheets

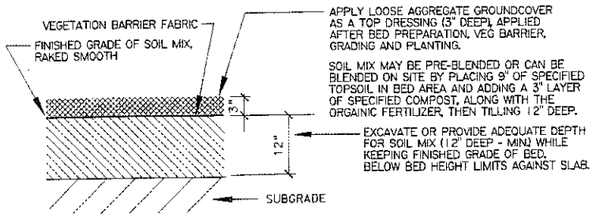

NOTES:
1. EXCAVATE BED AREA TO A DEPTH OF 12".
2. INSTALL SOIL MIX (75% TOPSOIL, 25% ORGANIC COMPOST) TO PROPER GRADE.
3. TILL IN ORGANIC FERTILIZERS & OTHER AMENDMENTS AS SPECIFIED.
4. REMOVE ANY EXISTING VEGETATION INSIDE BED AREA PRIOR TO PLANTING BY APPLYING AN APPROVED HERBICIDE OR OTHER METHOD APPROVED BY THE ENGINEER.

BED PREPARATION
SECTION — NTS

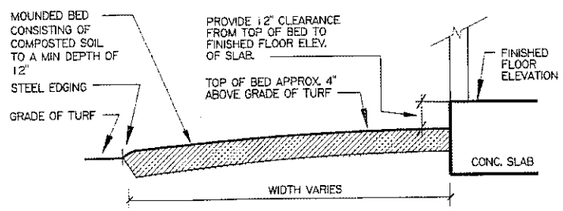

BED GRADING AT WALL
SECTION — NTS

APPLY AN ORGANIC, NON-CHEMICAL FERTILIZER TO ALL PLANTING BEDS, SOD AREAS, AND SEED AREAS.
1. APPLY FERTILIZER TO SOIL PRIOR TO CULTIVATION.
2. USE A NON-CHEMICAL FERTILIZER WHICH IS:
   (A) REGISTERED WITH TEXAS STATE CHEMIST AS A COMMERCIAL FERTILIZER.
   (B) MEETS USEPA GUIDELINES FOR UNRESTRICTED USE.
   (C) DERIVED FROM BIOLOGICAL SOURCES, SUCH AS, BUT NOT LIMITED TO: SEWAGE SLUDGE, MANURES, VEGETATION, ETC.
   (D) USE THE FOLLOWING PRODUCT, OR AN APPROVED EQUAL, CONTAINING HUMATES, ECO-MIN, AND BENEFICIAL SOIL INNOCULANTS IN GRANULAR FORM: MICROLIFE ULTIMATE 8-4-5, SAN JACINTO ENVIRONMENTAL SUPPLIES 713-957-0909

APPLICATION RATES:

BED AREAS	= 30 LBS PER 1000 SF
SEEDED AREAS	= 10 LBS PER 1000 SF
SODDED AREAS	= 10 LBS PER 1000 SF

BED PREPARATION NOTES:
ORGANIC FERTILIZERS AND SOIL AMENDMENTS:

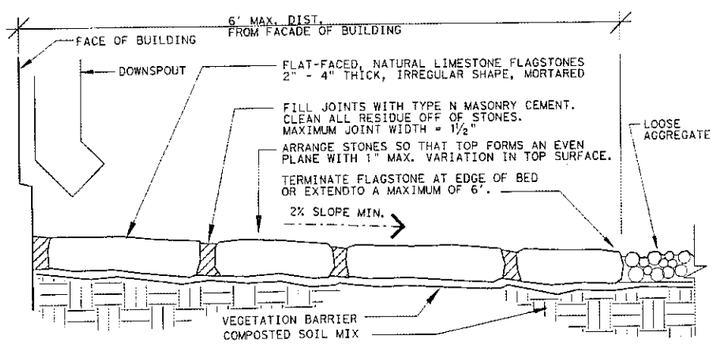

FLAGSTONE SPLASH DISPERSAL
SECTION — NTS

USE FLAT FACED LIMESTONE FROM LOCAL SOURCES, AS APPROVED BY THE ENGINEER. GROUT COLOR TO MATCH BUILDING GROUT.

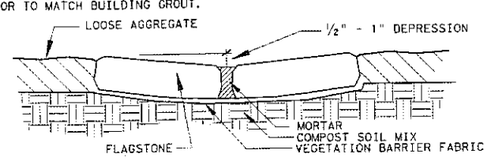

FLAGSTONE SPLASH DISPERSAL
SECTION - FRONT VIEW

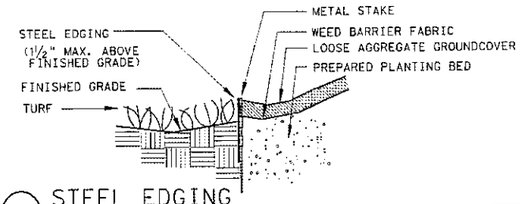

STEEL EDGING
SECTION — NTS

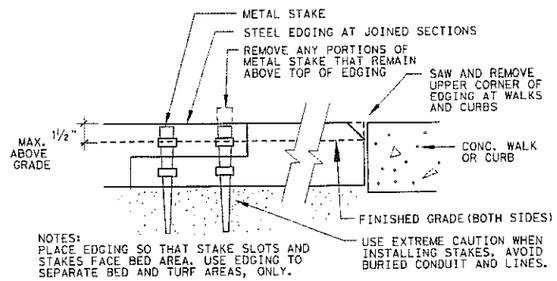

NOTES:
PLACE EDGING SO THAT STAKE SLOTS AND STAKES FACE BED AREA. USE EDGING TO SEPARATE BED AND TURF AREAS, ONLY.

STEEL EDGING
NTS

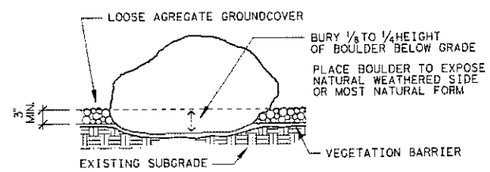

BOULDER PLACEMENT
SECTION — NTS

NOTE:
PROVIDE NATURAL LIMESTONE BOULDERS WITH WEATHERED, ROUNDED OR IRREGULAR AESTHETIC FORMS, AS APPROVED BY THE ENGINEER. NO BROKEN, SQUARED, SAWED, CHIPPED, OR MACHINE DAMAGED BOULDERS WILL BE ALLOWED. COLOR MAY VARY FROM OFF-WHITE, BEIGE, GRAY, BROWN OR SIMILAR NATURAL LIMESTONE COLORS.

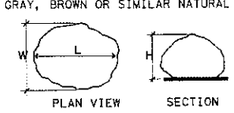

BOULDER MEASUREMENT CHART			
MINIMUM SIZES *	W	L	H
BOULDER (MEDIUM)	20"	26"	14"
BOULDER (LARGE)	30"	36"	24"

BOULDER MEASUREMENT
NTS

* SIZES SHOWN ARE MINIMUM ACCEPTABLE SIZES PER EACH DIMENSION MEASURED ALONG CENTER AXIS OF BOULDER

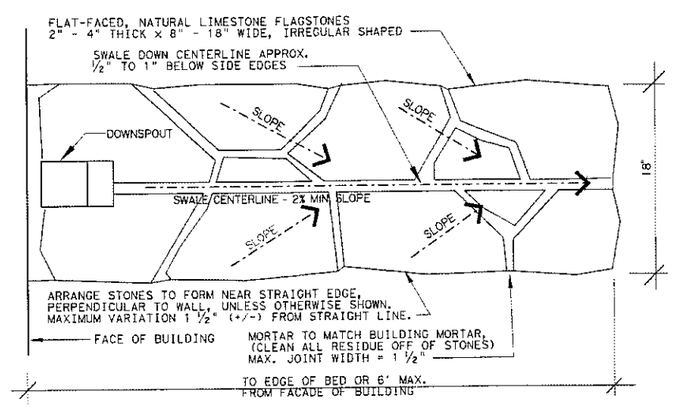

FLAGSTONE SPLASH DISPERSAL
PLAN VIEW — NTS

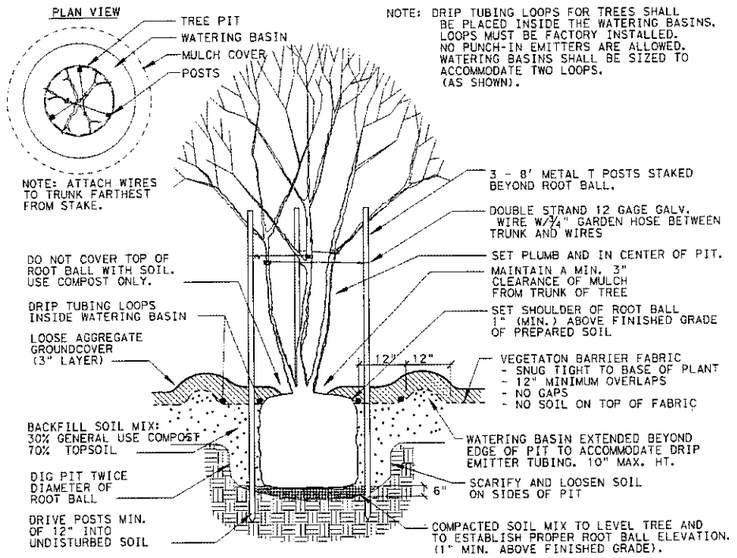

YAUPON HOLLY PLANTING (IN BEDS BY BUILDING)
SECTION (APPLY TO MULTI-TRUNK YAUPON HOLLY) — NTS

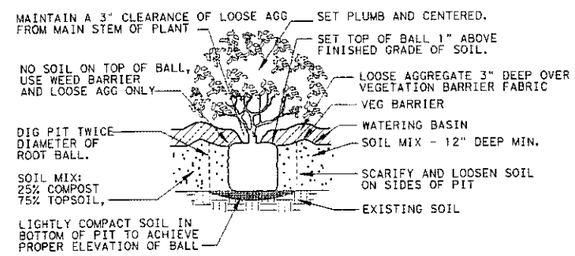

SHRUB PLANTING (IN BEDS BY BUILDING)
SECTION — NTS

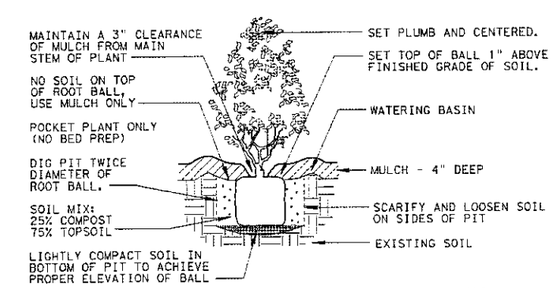

SHRUB PLANTING (FOR VEGETATIVE SCREEN AT REAR DRIVEWAY)
SECTION (APPLY TO COMPACT CHERRY LAUREL)) — NTS

PLANTING & LANDSCAPE CONSTRUCTION DETAILS

Texas Department of Transportation
125 E. 11th Street
Austin, Texas 78701-2483
(512) 416-3048

Copyright © 2005 Texas Department of Transportation

03/23/05
REGISTERED LANDSCAPE ARCHITECT
KERRY C. BLACKMON
STATE OF TEXAS

AREA ENGINEERING AND MAINTENANCE FACILITY
AUSTIN, TRAVIS COUNTY
AUSTIN DISTRICT 14

Revisions
△
△
△
△

Drawn by: KB
Project No. 470400238
Date 3/23/05
Sheet No. L4
of sheets

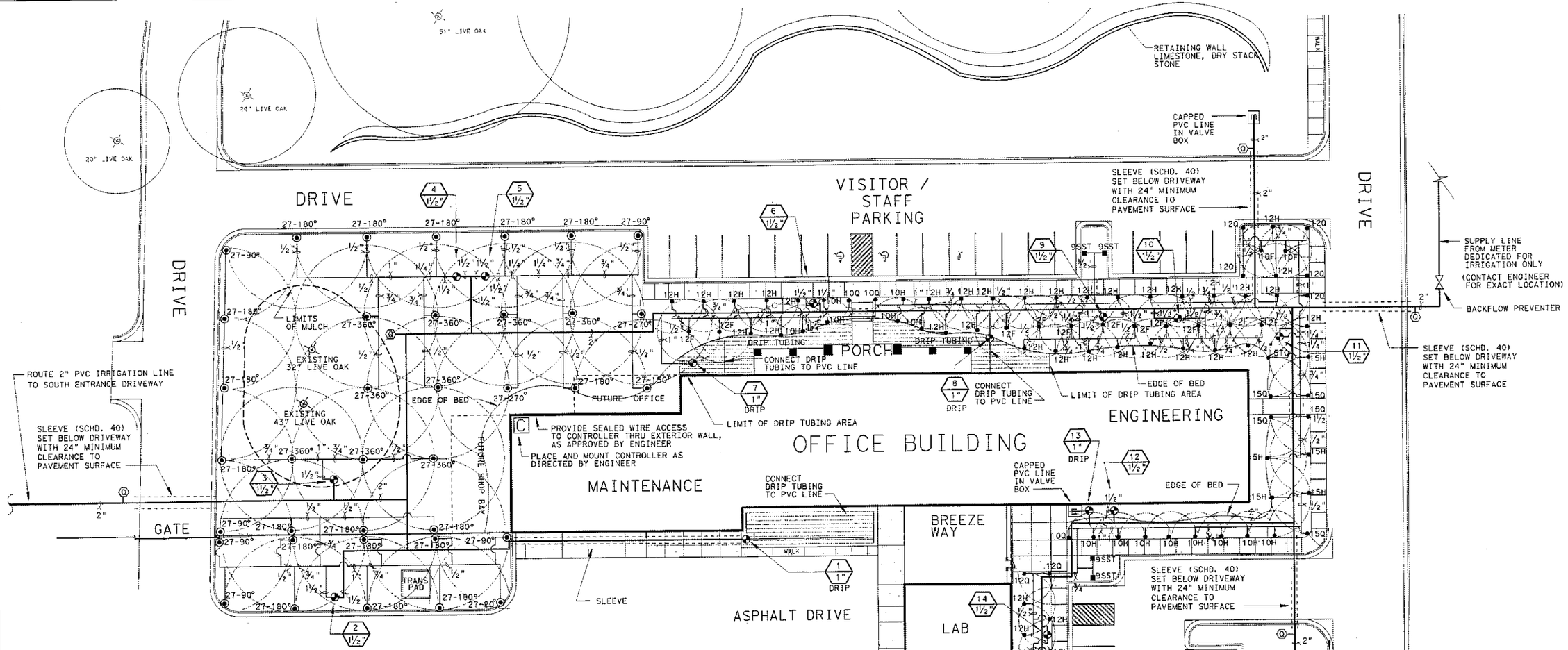

IRRIGATION MATERIALS SPECIFICATIONS

DESCRIPTION	EXAMPLE OR EQUAL	SIZE	EST. QTY.
BACKFLOW PREVENTER	AS APPROVED BY COA WATER DEPT	2"	1
CONTROLLER	RAINBIRD ESP-20LX PLUS	20 STATION	1
REMOTE CONTROL VALVE	RAINBIRD PEB (FOR DRIP SECTIONS)	1"	4
REMOTE CONTROL VALVE	RAINBIRD PEB (FOR SPRAY SECTIONS)	1½"	9
DRIP VALVE ASSEMBLY-INCLUDES: BACK FLUSH FILTER W/ DUCK BILL, PRESSURE REGULATOR, MANUAL BALL VALVE, SPRING LOADED CHECK VALVE	RAINBIRD BFF 100 W/ 150 MESH; RAINBIRD PSI-M40X-100; RAINBIRD BV SERIES; RAINBIRD CV 100	1 INCH SIZE FOR ALL DRIP DEVICES	4
DRIP EMITTER TUBING *	RAINBIRD LANDSCAPE DRIPLINE W/ DUAL OUTLET PORTS FOR EACH EMITTER LD-06-18-500	0.630" O.D. 0.6 EMITTERS AT 18" O.C.	AS REQ'D.
QUICK COUPLING VALVE	RAINBIRD 33DRC W/ 33DK KEYS **	¾"	6
POP-UP SPRAY HEAD (SEE SCHEDULE FOR NOZZLES)	RAINBIRD 1804 SAM-PRS (PRS SET AT 30 PSI)	4" POP-UP	142
SPRAY NOZZLES, STRIP NOZZLES, STREAM ROTATOR NOZZLES	RAINBIRD U SERIES; RAINBIRD SST STRIP SERIES; WALLA WALLA MP3000 ROTATOR	(SEE NOZZLES ON SUMMARY SHEET)	(SEE NOZZLES ON SUMMARY SHEET)
PIPE	SCHD 40 PVC	AS REQ'D.	AS REQ'D.
SLEEVES	SCHD 40 PVC	AS REQ'D.	AS REQ'D.
SWING JOINTS (ON ALL HEADS)	RAINBIRD TSJ SERIES	AS REQ'D.	AS REQ'D.
RAIN SENSOR	RAINBIRD RSD-BEX	N/A	1

NOTE: ALL FITTINGS SHALL BE OF THE SAME TYPE, SIZE AND CLASS AS THE PIPE.

FOR CONTRACTOR'S INFORMATIONAL PURPOSES ONLY. QUANTITIES ARE APPROXIMATE. CONTRACTOR MUST VERIFY AND PROVIDE QUANTITIES, MATERIALS, AND DEVICES NECESSARY TO COMPLETE JOB.

* PROVIDE DRIP TUBING TO ASSURE PROPER IRRIGATION FOR PLANTS SHOWN ON PLANTING PLAN, ONLY. DO NOT INSTALL DRIP TUBING IN UNPLANTED PORTIONS OF BED AREAS.

** PROVIDE 3 QUICK COUPLER KEYS (RB-33DK) WITH SWIVEL HOSE CONNECTORS TO THE ENGINEER PRIOR TO COMPLETION OF PROJECT.

(REFER TO GENERAL NOTES FOR ADDITIONAL WORK AND INFORMATION)

LEGEND OF SYMBOLS

VALVE INFORMATION
- 1 — STATION NUMBER
- 1" — VALVE SIZE

BACKFLOW PREVENTER
MAINLINE
LATERALS
SCH 40 SLEEVES
DRIP TUBING
REMOTE CONTROL VALVE
QUICK COUPLER VALVE
SPRAY HEADS W/ U NOZZLES
SPRAY HEADS W/ SST NOZZLES
SPRAY HEADS W/ MP3000 ROTATORS
CONTROLLER

IRRIGATION (AT BUILDING)

SCALE 1" = 20'

0 10 20 30 40 50
SCALE IN FEET

Texas Department of Transportation
125 E. 11th Street
Austin, Texas 78701-2483
(512) 416-3048
Copyright © 2005 Texas Department of Transportation

REGISTERED LANDSCAPE ARCHITECT KENNETH D. WILKINSON 251 STATE OF TEXAS
05/23/05

AREA ENGINEERING AND MAINTENANCE FACILITY
AUSTIN, TRAVIS COUNTY
AUSTIN DISTRICT 14

Revisions

Drawn by: KB
Project No. 470400238
Date 3/23/05
Sheet No. L5
of sheets

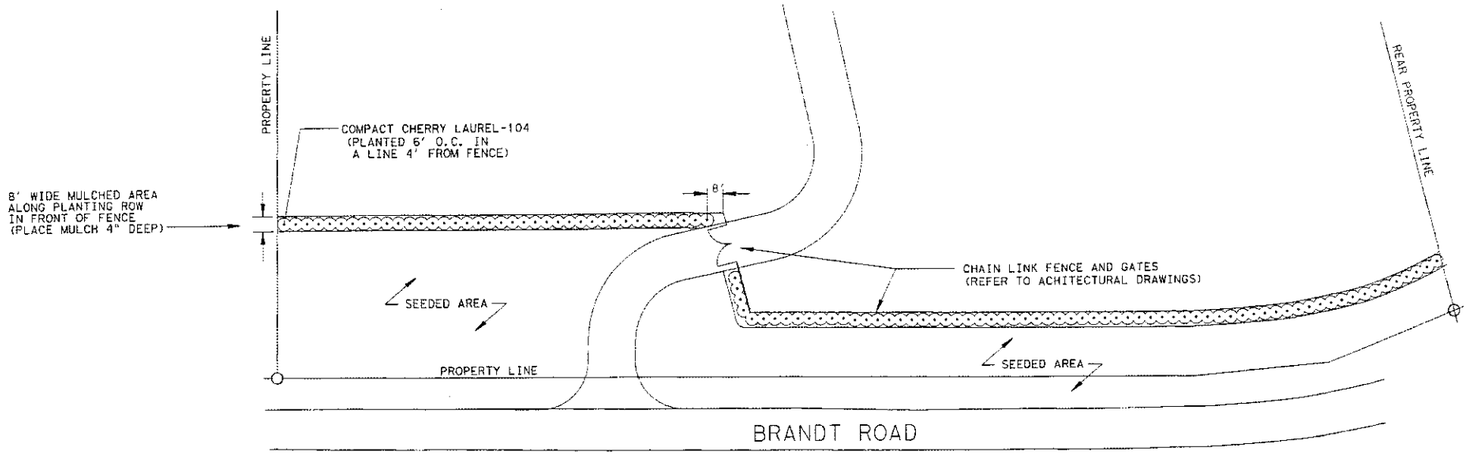

ESTIMATED SHEET QUANTITIES

PLANTS

QTY.	UNIT	DESCRIPTION	BOTANICAL NAME	SIZE	SPACING
104	EA	COMPACT CHERRY LAUREL	*PRUNUS CAROLINIANA*	5 GALLON	6' O.C.

MISC MATERIALS

34 *	CY	LANDSCAPE MULCH

* QUANTITIES SHOWN ARE APPROXIMATE.

PROVIDE ADEQUATE QUANTITIES NEEDED TO ENSURE PROPER COVERAGE FOR PROJECT.

PLANT NOTES:

1. PROVIDE PLANTS THAT HAVE FULL CROWNS AND ARE THOROUGHLY ROOTED IN THEIR CONTAINERS.
2. SIZES SHOWN ARE MINIMUM SIZES ALLOWED.
3. PROVIDE NURSERY GROWN PLANTS WITH NAME TAGS ATTACHED SHOWING THE COMMON NAME.

(REFER TO NOTES AND SPECIFICATIONS FOR ADDITIONAL WORK AND INFORMATION)

VEGETATIVE SCREENING PLAN

(REAR DRIVEWAY VEGETATIVE SCREEN)

PLANTING

SCALE 1" = 40'

0 20 40 60 80 100

SCALE IN FEET

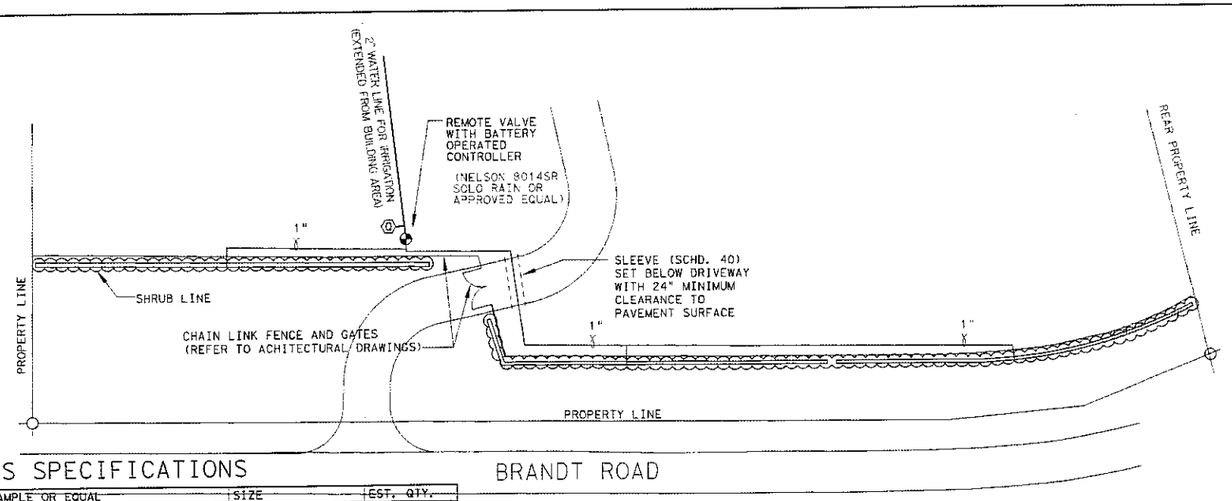

NOTES:

1. PROVIDE TWO PARALLEL LINES OF DRIP TUBING ON BOTH SIDES OF SHRUB LINE.
2. TRENCH AND COVER TUBING WITH 2 INCHES OF SOIL AND PLACE SO THAT TWO EMITTER OUTLETS (ONE FROM EACH TUBE) IS WITHIN THE WATERING BASIN FOR EACH SHRUB.
3. PLACE AIR/VACUUME RELIEF VALVE AT HIGH POINT OF EACH TUBING RUN. PLACE IN VALVE BOX WITH TOP FLUSH TO GRADE. VALVE MUST BE COMPATIBLE TO FIT RAINBIRD DRIP TUBING.

(REFER TO GENERAL NOTES FOR ADDITIONAL WORK AND INFORMATION)

IRRIGATION MATERIALS SPECIFICATIONS

DESCRIPTION	EXAMPLE OR EQUAL	SIZE	EST. QTY.
CONTROLLER (BATTERY OPERATED) (WITH 10 YEAR LITHIUM BATTERY)	NELSON SOLORAIN DURALIFE 8014SR (RAIN SENSOR READY)	SINGLE STATION	1
REMOTE CONTROL VALVE	NELSON 7900	1"	1
DRIP VALVE ASSEMBLY-INCLUDES:			1
BACK FLUSH FILTER W/ DUCK BILL PRESSURE REGULATOR MANUAL BALL VALVE SPRING LOADED CHECK VALVE	RAINBIRD BFF 100 W/ 150 MESH RAINBIRD PSI-M40X-100 RAINBIRD BV SERIES RAINBIRD CV 100	1 INCH SIZE FOR ALL DRIP DEVICES	
DRIP EMITTER TUBING *	RAINBIRD LANDSCAPE DRIPLINE W/ DUAL OUTLET PORTS FOR EACH EMITTER LD-09-24-500	0.630" O.D. 0.9 GPH EMITTERS AT 24" O.C.	AS REQ'D.
QUICK COUPLING VALVE	RAINBIRD 33DRC W/ 33DK KEYS **	¾"	1
PIPE	SCHD 40 PVC	AS REQ'D.	AS REQ'D.
SLEEVES	SCHD 40 PVC	AS REQ'D.	AS REQ'D.
RAIN SENSOR	NELSON RAIN TRIP RAIN SENSOR 8501	N/A	1
AIR/VACUUM RELIEF VALVE	MUST BE COMPATIBLE WITH RAINBIRD DRIP TUBING		6

NOTE: ALL FITTINGS SHALL BE OF THE SAME TYPE, SIZE AND CLASS AS THE PIPE.

FOR CONTRACTOR'S INFORMATIONAL PURPOSES ONLY. QUANTITIES ARE APPROXIMATE. CONTRACTOR MUST VERIFY AND PROVIDE QUANTITIES, MATERIALS, AND DEVICES NECESSARY TO COMPLETE JOB.

LEGEND OF SYMBOLS

- MAINLINE
- LATERALS
- SCH 40 SLEEVES
- QUICK COUPLER VALVE
- DRIP TUBING (0.9GPM AT 24" O.C.)
- REMOTE CONTROL VALVE (WITH LITHIUM BATTERY OPERATED CONTROLLER)

VEGETATIVE SCREENING PLAN

(REAR DRIVEWAY VEGETATIVE SCREEN)

IRRIGATION

SCALE 1" = 40'

0 20 40 60 80 100

SCALE IN FEET

Texas Department of Transportation
125 E. 11th Street
Austin, Texas 78701-2483
(512) 416-3048
Copyright © 2003 Texas Department of Transportation

03/23/05
REGISTERED LANDSCAPE ARCHITECT
KENNY D. CLEMON
2251
STATE OF TEXAS

AREA ENGINEERING
AND MAINTENANCE FACILITY
AUSTIN, TRAVIS COUNTY
AUSTIN DISTRICT 14

Revisions
1
2
3
4

Drawn by: KB
Project No. 470400238
Date 3/23/05
Sheet No. L6
of sheets

SUMMARY OF LANDSCAPE QUANTITIES

PLANTS

QTY.	UNIT	DESCRIPTION	BOTANICAL NAME	SIZE	REMARKS	SPACING
2	EA	YAUPON HOLLY	*ILEX VOMITORIA*	8' HT. x 6' SPD.	MULTI-TRUNK, FEMALE	AS SHOWN
3	EA	TEXAS MOUNTAIN LAUREL	*SOPHORA SECUNDIFLORA*	5' HT. x 3.5' SPD.	MULTI-TRUNK	AS SHOWN
2	EA	TEXAS SOTOL	*DASYLIRION TEXANUM*	2' HT. x 3' SPD.	FULL SPECIMEN	
34	EA	DWARF WAX MYRTLE	*MYRICA PUSILLA*	5 GALLON		42" O.C.
24	EA	DWARF YAUPON	*ILEX VOMITORIA NANA*	5 GALLON		30" O.C.
24	EA	LINDHEIMER MUHLY GRASS	*MUHLENBERGIA LINDHEIMERII*	5 GALLON		36" O.C.
27	EA	GULF MUHLY GRASS "REGAL MIST"	*MUHLENBERGIA CAPILLARIS*	5 GALLON		24" O.C.
1	EA	FLAME ACANTHUS	*ANISACANTHUS QUADRIDUS*	5 GALLON	*VAR. WRIGHTII*	
6	EA	AGARITA	*BERBERIS TRIFOLIATA*	5 GALLON		
3	EA	RED YUCCA	*HESPERALOE PARVIFLORA*	5 GALLON		
9	EA	YELLOW BELLS (ESPERANZA)	*TECOMA STANS*	5 GALLON		
104	EA	COMPACT CHERRY LAUREL	*PRUNUS CAROLINIANA*	5 GALLON		6' O.C.
8	EA	TURK'S CAP	*MALVAVISCUS ARBOREUS*	1 GALLON	*VAR. DRUMMONDII*	
27	EA	FALL ASTER	*ASTER OBLONGIFOLIUS*	1 GALLON		48" O.C.
13	EA	PAVONIA (ROCK ROSE)	*PAVONIA LASIOPETALA*	1 GALLON		36" O.C.
60	EA	AUTUMN SAGE	*SALVIA GREGGII*	1 GALLON	ROSE PINK	24" O.C.
66	EA	NEW GOLD LANTANA	*LANTANA HYBRID*	1 GALLON		18" O.C.

PLANT NOTES:

1. PROVIDE PLANTS THAT HAVE FULL CROWNS AND ARE THOROUGHLY ROOTED IN THEIR CONTAINERS.
2. PROVIDE SPECIMEN QUALITY, TREE-FORM, FEMALE BERRY-BEARING, YAUPON HOLLIES WITH A MINIMUM OF 3 TRUNKS. CROWNS MUST BE FULL IN CIRCUMFERENCE WITHOUT FLAT OR DAMAGED SIDES. YAUPON HOLLIES MUST BE CONTAINER GROWN.
3. PROVIDE MULTI-TRUNK TEXAS MOUNTAIN LAURELS, B&B OR CONTAINER GROWN.
4. SIZES SHOWN ARE MINIMUM SIZES ALLOWED.
5. PROVIDE NURSERY GROWN PLANTS WITH NAME TAGS ATTACHED SHOWING COMMON NAME

(REFER TO GENERAL NOTES FOR ADDITIONAL WORK AND INFORMATION)

MISC MATERIALS

610	* LF	STEEL EDGING
4845	* SF	VEGETATION BARRIER FABRIC
40	* CY	LOOSE AGGREGATE GROUNDCOVER
79	* CY	LANDSCAPE MULCH
3365	* SY	TIFWAY 419 BERMUDA SOD
4	EA	BOULDERS (MEDIUM)
5	EA	BOULDERS (LARGE)

* QUANTITIES SHOWN ARE APPROXIMATE.

PROVIDE ADEQUATE QUANTITIES NEEDED TO ENSURE PROPER COVERAGE FOR PROJECT.

SEEDING:

1. SEED ALL DISTURBED, BARE, OR SPARSE AREAS THAT ARE OUTSIDE THE AREAS FOR SOD, PAVEMENT, OR OTHER SURFACE TREATMENTS (REFER TO SPEICIFICATIONS FOR SEED MIX, RATES, AND APPLICATION.)

FERTILIZER AND SOIL AMENDMENTS:

(REFER TO SPECIFICATIONS FOR TYPE, RATES AND APPLICATIONS.)

SEEDING:
(REFER TO SPECIFICATIONS AND PLAN NOTES FOR SEEDING TYPES, RATES, AND APPLICATION.)

IRRIGATION

DESCRIPTION	EXAMPLE OR EQUAL	SIZE	EST. QTY.
BACKFLOW PREVENTER	AS APPROVED BY COA WATER DEPT	2	1
CONTROLLER	RAINBIRD ESP-20LX PLUS	20 STATION	1
CONTROLLER (BATTERY OPERATED) (WITH 10 YEAR LITHIUM BATTERY)	NELSON SOLORAIN DURALIFE 8014SR (RAIN SENSOR READY)	SINGLE STATION	
REMOTE CONTROL VALVE	RAINBIRD PEB (FOR DRIP SECTIONS)	1"	4
REMOTE CONTROL VALVE	RAINBIRD PEB (FOR SPRAY SECTIONS)	1½"	9
REMOTE CONTROL VALVE (AT REAR GATE)	NELSON 7900 (FOR DRIP SECTION)	1"	1
DRIP VALVE ASSEMBLY-INCLUDES:			5
BACK FLUSH FILTER W/ DUCK BILL	RAINBIRD BFF 100 W/ 150 MESH	1 INCH SIZE	
PRESSURE REGULATOR	RAINBIRD PSI-M40X-100	FOR ALL DRIP	
MANUAL BALL VALVE	RAINBIRD BV SERIES	DEVICES	
SPRING LOADED CHECK VALVE	RAINBIRD CV 100		
DRIP EMITTER TUBING	RAINBIRD LANDSCAPE DRIPLINE W/ DUAL OUTLET PORTS FOR EACH EMITTER LD-06-18-500	0.630" O.D. 0.6 EMITTERS AT 18" O.C.	AS REQ'D.
DRIP EMITTER TUBING (AT REAR GATE)	RAINBIRD LANDSCAPE DRIPLINE W/ DUAL OUTLET PORTS FOR EACH EMITTER LD-09-24-500	0.630" O.D. 0.9 GPH EMITTERS AT 24" O.C.	AS REQ'D.
QUICK COUPLING VALVE	RAINBIRD 33DRC W/ 33DK KEYS **	¾	7
POP-UP SPRAY HEAD	RAINBIRD 1804 SAM-PRS	4" POP-UP	142
(SEE SUMMARY FOR NOZZLES BELOW)	(PRS SET AT 30 PSI)		
SPRAY NOZZLES	RAINBIRD U SERIES	(SEE NOZZLE SUMMARY)	(SEE NOZZLE SUMMARY)
STRIP NOZZLES	RAINBIRD SST STRIP SERIES		
STREAM ROTATOR NOZZLES	WALLA WALLA MP3000 ROTATOR		
PIPE	SCHD 40 PVC	AS REQ'D.	AS REQ'D.
SLEEVES	SCHD 40 PVC	AS REQ'D.	AS REQ'D.
SWING JOINTS (ON ALL HEADS)	RAINBIRD TSJ SERIES	AS REQ'D.	AS REQ'D.
RAIN SENSOR	RAINBIRD RSD-BEX	N/A	1
RAIN SENSOR	NELSON RAIN TRIP RAIN SENSOR 8501	N/A	1
AIR/VACUUM RELIEF VALVE (REAR GATE)	MUST BE COMPATIBLE WITH RAINBIRD	DRIP TUBING	6

FOR CONTRACTOR'S INFORMATIONAL PURPOSES ONLY. QUANTITIES ARE APPROXIMATE. CONTRACTOR MUST VERIFY AND PROVIDE QUANTITIES, MATERIALS, AND DEVICES NECESSARY TO COMPLETE JOB.

NOTE: ALL FITTINGS SHALL BE OF THE SAME TYPE, SIZE AND CLASS AS THE PIPE.

(REFER TO SPECIFICATIONS AND PLAN SHEETS FOR ADDITIONAL WORK AND INFORMATION)

NOZZLES

(RAINBIRD OR APPROVED EQUAL)

TYPE	RADIUS	COVER	QTY.
STRIP SERIES	SST9	9'x18'	4
U SERIES	10F	360°	2
	10H	180°	14
	10Q	90°	3
	12F	360°	12
	12TQ	270°	1
	12H	180°	51
	12Q	90°	7
	15TQ	270°	1
	15H	180°	5
	15Q	90°	1
MP3000 ROTATOR	27F *	360°	
	27TQ *	270°	9
	27H *	180°	2
	27Q *	90°	26

* RADIUS DISTANCE AT 30 PSI

(RAINBIRD 1800 SAM-PRS SPRAY HEAD IS FACTORY SET AT 30 PSI)

LANDSCAPE SUMMARIES

Texas Department of Transportation
125 E. 11th Street
Austin, Texas 78701-2483
(512) 416-3048
Copyright © 2005 Texas Department of Transportation

03/23/05
REGISTERED LANDSCAPE ARCHITECT
K. BLANCHARD
STATE OF TEXAS

AREA ENGINEERING AND MAINTENANCE FACILITY
AUSTIN, TRAVIS COUNTY
AUSTIN DISTRICT 14

Revisions
△
△
△
△

Drawn by: KB
Project No. 47040023B
Date 3/23/05
Sheet No. L7
of sheets

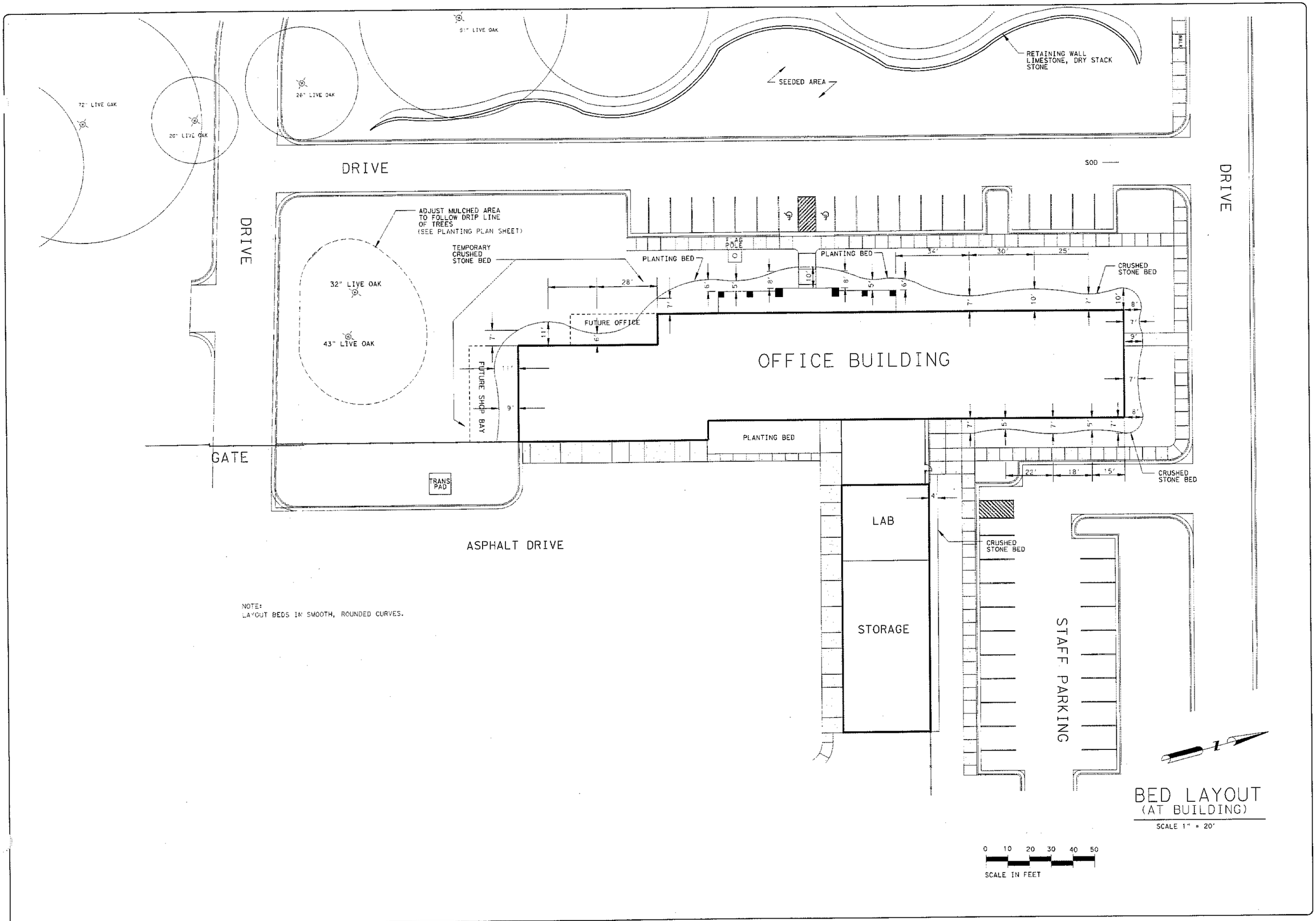

Texas Department of Transportation
125 E. 11th Street
Austin, Texas 78701-2483
(512) 416-3646
Copyright © 2005 Texas Department of Transportation

03/23/05
REGISTERED LANDSCAPE ARCHITECT
KENNETH O. BLACKMON
125
STATE OF TEXAS

AREA ENGINEERING AND MAINTENANCE FACILITY
AUSTIN, TRAVIS COUNTY
AUSTIN DISTRICT 14

Revisions

Drawn by: KB

Project No. 470400238

Date 3/23/05

Sheet No. L8

of sheets

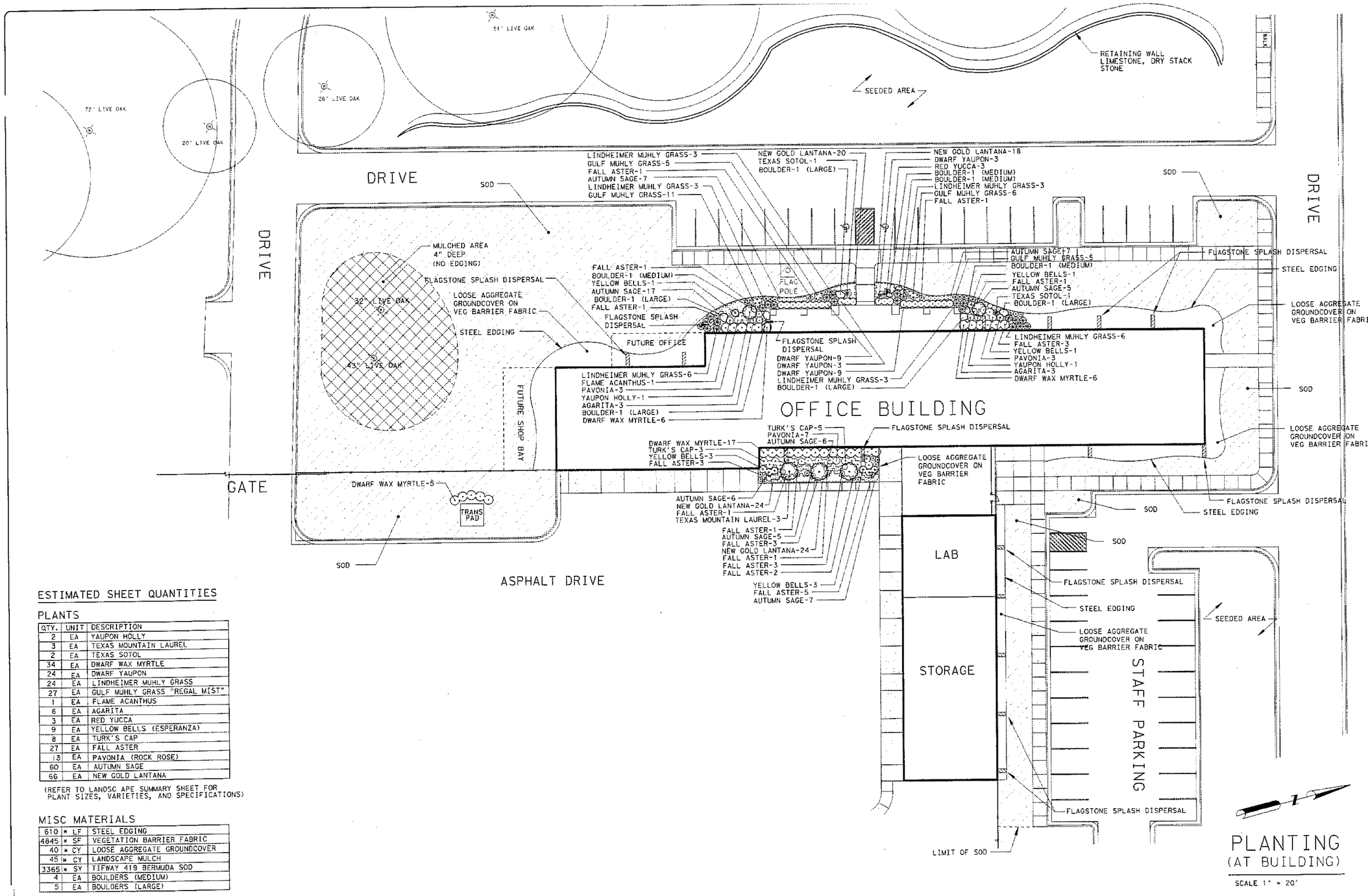

ESTIMATED SHEET QUANTITIES

PLANTS

QTY.	UNIT	DESCRIPTION
2	EA	YAUPON HOLLY
3	EA	TEXAS MOUNTAIN LAUREL
2	EA	TEXAS SOTOL
34	EA	DWARF WAX MYRTLE
24	EA	DWARF YAUPON
24	EA	LINDHEIMER MUHLY GRASS
27	EA	GULF MUHLY GRASS "REGAL MIST"
1	EA	FLAME ACANTHUS
6	EA	AGARITA
3	EA	RED YUCCA
9	EA	YELLOW BELLS (ESPERANZA)
8	EA	TURK'S CAP
27	EA	FALL ASTER
13	EA	PAVONIA (ROCK ROSE)
60	EA	AUTUMN SAGE
66	EA	NEW GOLD LANTANA

(REFER TO LANDSCAPE SUMMARY SHEET FOR PLANT SIZES, VARIETIES, AND SPECIFICATIONS)

MISC MATERIALS

610	*	LF	STEEL EDGING
4845	*	SF	VEGETATION BARRIER FABRIC
40	*	CY	LOOSE AGGREGATE GROUNDCOVER
45	*	CY	LANDSCAPE MULCH
3365	*	SY	TIFWAY 419 BERMUDA SOD
4		EA	BOULDERS (MEDIUM)
5		EA	BOULDERS (LARGE)

* QUANTITIES SHOWN ARE APPROXIMATE.

PROVIDE ADEQUATE QUANTITIES NEEDED TO ENSURE PROPER COVERAGE FOR PROJECT.

SEEDING NOTE:

1. SEED ALL DISTURBED, BARE, OR SPARSE AREAS THAT ARE OUTSIDE THE AREAS FOR SOD, PAVEMENT, OR OTHER SURFACE TREATMENTS

(REFER TO GENERAL NOTES FOR SEED MIX AND RATES).

FLAGSTONE SPASH DISPERSAL:

PLACE PLANTS TO FIT AROUND FLAGSTONE SPLASH DISPERSAL UNITS. (REF. TO PLANTING AND LANDSCAPE CONSTRUCTIONS DETAILS SHEET)

Texas Department of Transportation
125 E. 11th Street
Austin, Texas 78701-2483
(512) 416-2048

Copyright © 2005 Texas Department of Transportation

03/23/05

REGISTERED LANDSCAPE ARCHITECT
KERRY O. MACKSON
STATE OF TEXAS

AREA ENGINEERING AND MAINTENANCE FACILITY
AUSTIN, TRAVIS COUNTY
AUSTIN DISTRICT 14

Revisions

Drawn by: KB

Project No. 470400238

Date 3/23/05

Sheet No. L9

of sheets

STRUCTURAL GENERAL NOTES

FOUNDATION NOTES :

1. REMOVE ALL VEGETATION AND TOP SOIL FROM THE BUILDING AREA. STOCKPILE TOP SOIL FOR USE AT THE END OF PROJECT. EXCAVATE THE EXISTING SUBGRADE TO A DEPTH OF 3 FEET WITHIN THE BUILDING PERIMETER.
2. SCARIFY, MIX 7 % LIME/CEMENT BY WT. DEPENDING ON SOIL CONDITION, AND RECOMPACT THE NEXT 8" OF SOIL TO 95 % OF MAX DENSITY PER ASTM D698. THEN BACKFILL IN 8" LIFTS USING STRUCTURAL FILL . COMPACT TO A DENSITY OF 95 % PER ASTM D698 AT MOISTURE CONTENT EQUAL TO OR GREATER THAN THE OPTIMUM MOISTURE CONTENT FOR COHESIVE FILL AND AT WORKABLE MOISTURE CONTENT FOR GRANULAR FILL.
3. STRUCTURAL FILL SHALL CONSIST OF WELL GRADED GRANULAR MATERIAL FREE OF ORGANIC MATTER AND DEBRIS. NATURALLY OR ARTIFICIALLY WELL GRADED MIXTURE OF GRAVEL, CRUSHED STONE AND SAND: ASTM D 2940 WITH AT LEAST 95 PERCENT PASSING A 1 1/2 INCH SIEVE AND NOT MORE THAN 20 % PASSING No 200 U.S. STANDARD SIEVE, AND INCLUDE ALL IN BETWEEN SIZES. A PLASTIC INDEX OF 8 TO 18 WITH A LIQUID LIMIT OF 35 OR LESS IS REQUIRED.
4. COMPACTION AND MOISTURE CONTENT OF SUBGRADE AND EACH LIFT SHALL BE MONITORED BY QC INSPECTOR.
5. ALLOWABLE BEARING = 2000 PSF.
6. FOOTING EXCAVATION SHALL BE NEAT AND FREE OF LOOSE OR WET MATERIALS.
7. THE VAPOR BARRIER BELOW ALL SLAB AREAS SHALL BE 10 MIL POLYETHYLENE WITH ALL JOINTS LAPPED 12" CONTINUOUS AND SEALED. DROP VAPOR BARRIER DOWN THE SIDES OF ALL BEAM TRENCHES. DO NOT PLACE VAPOR BARRIER ACROSS TRENCH BOTTOM.
8. IF BEARING SOILS ARE SOFTENED BY SURFACE WATER INTRUSIONS DURING EXPOSURE OR BY DESICCATION, THE UNSUITABLE SOILS MUST BE REMOVED FROM THE FOUNDATION EXCAVATION PRIOR TO PLACEMENT OF CONCRETE
9. REFER TO GEOTECHINICAL EXPLORATION BY ETTL ENGINEERS AND CONSULTANTS, INC. ETTL JOB No. G1571-04 DATED 10 / 29 / 2004.
10. GRADE AREA AROUND BUILDING TO DRAIN WATER AWAY FROM THE STRUCTURE. FINISHED FLOOR ELEVATIONS SHALL BE MINIMUM 12" ABOVE THE FINISH GRADE.
11. REFER TO PLUMBING DRAWINGS FOR LOCATION OF ALL SLAB PENETRATIONS

APPLICABLE SPECIFICATIONS AND CODES:

CONSTRUCTION SHALL BE IN ACCORDANCE WITH THE INTERNATIONAL BUILDING CODE, IBC 2003; ACI 318-99; AISC MANUAL OF STEEL CONSTRUCTION, 9TH ED.; SPECIFICATION FOR THE DESIGN OF COLD FORMED STEEL STRUCTURAL MEMBERS AISI

REINFORCING CONCRETE NOTES:

1. CONCRETE CONSTRUCTION SHALL BE IN ACCORDANCE WITH THE AMERICAN CONCRETE INSTITUTE "BUILDING CODE REQUIREMENTS FOR REINFORCED CONCRETE," ACI 318-99.
2. ALL CONCRETE SHALL HAVE A SPECIFIED MINIMUM COMPRESSIVE STRENGTH OF 3000 P.S.I. AT 28 DAYS.
3. SLUMP 3" to 5" WITH MAX. WATER/CEMENT RATIO OF 0.45
4. PROVIDE 5 % ±1-1/2 % OF ENTRAINED AIR IN CONCRETE PERMANENTLY EXPOSED TO THE WEATHER.
5. CONSTRUCTION JOINTS AS SHOWN ON THE DRAWING. CONTRACTOR SHALL SUBMIT ANY ADDITIONAL CONSTRUCTION JOINTS FOR ENGINEER'S REVIEW.
6. EMBEDDED CONDUITS, PIPES AND SLEEVES SHALL MEET THE REQUIREMENTS OF ACI 318-99 SECT. 6.3. INCLUDING THE FOLLOWING:
   A. CONDUITS AND PIPES EMBEDDED WITHIN A SLAB, WALL, OR BEAM (OTHER THAN THOSE PASSING THROUGH) SHALL NOT BE LARGER IN OUTSIDE DIMENSION THAN 1/3 THE OVERALL THICKNESS OF THE SLAB, WALL OR BEAM IN WHICH THEY ARE EMBEDDED.
   B. CONDUITS, PIPES AND SLEEVES SHALL NOT BE SPACED CLOSER THAN THREE DIAMETERS OR WIDTHS ON CENTER.
   C. EMBEDDED CONDUITS, PIPES AND SLEEVES SHALL BE OF UNCOATED OR GALVANIZED IRON OR STEEL NOT THINNER THAN STANDARD SCHEDULE 40 STEEL PIPE.
7. REINFORCING STEEL SHALL BE DEFORMED BARS IN CONFORMANCE WITH ASTM A615 GRADE 60.
8. DETAILING OF REINFORCING STEEL IN ACCORDANCE WITH ACI DETAILING MANUAL
9. MIN. LAP 38 X BAR DIA. (NOMINAL)
10. STEEL CLEAR COVER:
    GRADE BEAM.- 1-1/2" TOP, 3" BOTTOM , AND 2" SIDE (FORMED). 3" SIDE (PLACE AGAINST EARTH)
    SLAB ON GRADE.- 2" TOP
11. USE WATER CURING FOR CONCRETE
12. PROVIDE CORNER AND INTERSECTION REINFORCEMENT AS SHOWN IN STD. DETAIL 10/S3.3
13. CONCRETE DESIGNED TO BE PUMPED SHALL BE SO NOTED ON THE MIX DESIGNS AND SHALL HAVE MIX PROPORTIONS COMPATIBLE WITH THE PUMPING PROCESS.
14. ALL MAJOR DEFECTIVE AREAS IN CONCRETE INCLUDING HONEYCOMBS, CRACKS IN EXCESS OF 0.01", AND SPALLS THAT OCCUR IN LOAD CARRYING MEMBERS VITAL TO STRUCTURAL INTEGRITY SHALL BE REPAIRED USING EPOXY ADHESIVE, EPOXY MORTAR AND/OR POLYMER CONCRETE. EXTENT AND DETERMINATION OF MAJOR DEFECTIVE AREAS SHALL BE DETERMINED BY THE ENGINEER.
15. REFER TO TxDOT STANDARD 1993 SPECIFICATIONS FOR CURING, FINISHES AND REBAR PREPARATION

CONCRETE FORMWORK

1. THE DESIGN, CONSTRUCTION, AND SAFETY OF ALL FORM WORK SHALL BE THE RESPONSIBILITY OF THE GENERAL CONTRACTOR. ALL FORMS, SHORES, BACK SHORES, FALSEWORK, BRACING, AND OTHER TEMPORARY SUPPORTS SHALL BE ENGINEERED TO SUPPORT ALL LOADS IMPOSED INCLUDING THE WET WEIGHT OF CONCRETE, CONSTRUCTION EQUIPMENT, LIVE LOADS, LATERAL LOADS DUE TO WIND AND WET UNBALANCED CONCRETE. THE CONTRACTOR SHALL ALSO BE RESPONSIBLE FOR DETERMINING WHEN TEMPORARY SUPPORTS, SHORES, BACKSHORING, AND OTHER BRACING SHALL BE SAFELY REMOVED.

LIGHT GAGE STEEL FRAMING

1. BASED ON USG STEEL FRAMING SYSTEMS. PROVIDE USG OR APPROVED EQUIVALENT
2. FRAMING MEMBERS SHALL BE AS NOTED WITH STEEL BLOCKING AT MIDHEIGHT FOR WALLS GREATER THAN 8'-6" IN HEIGHT.
   EXTERIOR WALLS 6" STEEL STUDS
   INTERIOR WALLS 3⅝" STEEL STUDS
3. ALL MEMBERS SHALL BE FORMED FROM STEEL HAVING A MINIMUM YIELD STRENGTH OF 40 KSI.
4. ALL TRACK AND PERIMETER CHANNEL SHALL BE UNPUNCHED NOMINALLY THE SAME SIZE AND GAGE AS THE STUD.

STEEL FRAMING NOTES

1. STRUCTURAL STEEL SHALL CONFORM TO ASTM A36. STRUCTURAL TUBING SHALL CONFORM TO ASTM A500, GRADE B, Fy = 46 KSI. CONNECTIONS SHALL CONFORM TO REQUIREMENTS OF AISC.
2. CONNECTIONS SHALL BE ASTM A325 BOLTS OR WELDED TO CARRY THE TABULATED AISC CAPACITY FOR THE SPAN OF THE MEMBER
3. COLUMN BASE PLATES SHALL BE SET TO THE ELEVATION INDICATED ON THE DRAWINGS AND LEVELED USING STEEL SHIMS OR BY DOUBLE NUTS ON ANCHOR BOLTS. BASE PLATES SHALL THEN BE GROUTED WITH A MINIMUM 1" OF NON-SHRINK, HIGH STRENGTH NONMETALLIC GROUT. TIGHTEN ANCHOR BOLTS AFTER SUPPORTED MEMBERS HAVE BEEN POSITIONED AND PLUMBED.
4. WHERE METAL DECK IS SUPPORTED CONTINUOUSLY AT EDGES, WELD DECK TO STEEL SUPPORT AT 12" O. C.
5. ROOF DECK IS 1½" - 22 GAUGE TYPE F INTERMEDIATE RIB DECK COMPLYING WITH STEEL DECK INSTITUTE WITH MINIMUM I = 120 IN^4, SN = 120 IN^3 ATTACH TO SUPPORTING MEMBERS BY PLUG WELDING DIRECTLY THROUGH BOTTOM OF THE RIBS AT EVERY SUPPORT. WELD EACH SHEET AT BOTH SIDES AND AT OTHER SO THAT SPACING BETWEEN WELDS ACROSS THE WIDTH OF EACH SHEET DOES NOT EXCEED 18", IN ACCORDANCE WITH STEEL DECK INSTITUTE'S SPECIFICATIONS
6. FIELD CUTTING OF STRUCTURAL STEEL OR ANY FIELD MODIFICATION TO STRUCTURAL STEEL SHALL NOT BE MADE WITHOUT APPROVAL OF THE ENGINEER.

COORDINATION

1. IT IS THE RESPONSIBILITY OF THE GENERAL CONTRACTOR TO OBTAIN ALL CONTRACT DOCUMENTS AND LATEST ADDENDA AND TO SUBMIT SUCH DOCUMENTS TO ALL SUBCONTRACTORS AND MATERIAL SUPPLIERS PRIOR TO THE SUBMITTAL OF SHOP DRAWINGS, FABRICATION OF ANY STRUCTURAL MEMBERS, AND CONSTRUCTION.
2. THE GENERAL CONTRACTOR SHALL COMPARE THE ARCHITECTURAL, STRUCTURAL AND MECHANICAL DRAWINGS AND REPORT ANY DISCREPANCY BETWEEN EACH SET OF DRAWINGS AND WITHIN EACH SET OF DRAWINGS TO THE ARCHITECT AND ENGINEER PRIOR TO THE FABRICATION AND INSTALLATION OF ANY STRUCTURAL MEMBERS.
3. ONLY LARGER SLEEVE OPENINGS AND FRAMED OPENINGS IN STRUCTURAL FRAMING COMPONENT MEMBERS ARE INDICATED ON THE STRUCTURAL DRAWINGS. HOWEVER, ALL SLEEVES, INSERTS AND OPENINGS, INCLUDING FRAMES AND/OR SLEEVES SHALL BE PROVIDED FOR PASSAGE, PROVISION AND/OR INCORPORATION OF THE WORK OF THE CONTRACT, INCLUDING BUT NOT LIMITED TO MECHANICAL, ELECTRICAL AND PLUMBING WORK. THIS WORK SHALL INCLUDE THE COORDINATION OF SIZES, ALIGNMENT, DIMENSIONS, POSITION, LOCATIONS, ELEVATIONS AND GRADES AS REQUIRED TO SERVE THE INTENDED PURPOSE. OPENINGS NOT INDICATED ON THE STRUCTURAL DRAWINGS, BUT REQUIRED AS NOTED ABOVE, SHALL BE SUBMITTED TO THE ENGINEER FOR REVIEW.
4. REFER TO ARCHITECTURAL, MECHANICAL, ELECTRICAL AND PLUMBING DRAWINGS FOR FLOOR ELEVATIONS, SLOPES, DRAINS AND LOCATION OF DEPRESSED AND ELEVATED FLOOR AREAS.
5. COMPATIBILITY OF THE STRUCTURE AND PROVISIONS FOR BUILDING EQUIPMENT SUPPORTED ON OR FROM STRUCTURAL COMPONENTS SHALL BE VERIFIED AS TO SIZE, DIMENSIONS, CLEARANCES, ACCESSIBILITY, WEIGHTS AND REACTION WITH THE EQUIPMENT FOR WHICH THE STRUCTURE HAS BEEN DESIGNED PRIOR TO SUBMISSION OF SHOP DRAWINGS AND DATA FOR EACH PIECE OF EQUIPMENT AND FOR STRUCTURAL COMPONENTS. DIFFERENCES SHALL BE NOTED ON THE SUBMITTALS. SUCH DETAILS SHALL APPLY WHETHER OR NOT THEY ARE KEYED IN AT EACH LOCATION. QUESTIONS REGARDING APPLICABILITY OF TYPICAL DETAILS SHALL BE DETERMINED BY THE ENGINEER.
6. SHOP DRAWINGS SHALL BE PREPARED FOR ALL STRUCTURAL ITEMS AND SUBMITTED FOR REVIEW BY THE ENGINEER. CONTRACT DRAWINGS SHALL NOT BE REPRODUCED AND USED AS SHOP DRAWINGS. ALL ITEMS DEVIATING FROM THE CONTRACT DRAWINGS OR FROM PREVIOUSLY SUBMITTED SHOP DRAWINGS SHALL BE CLOUDED.
7. THE DETAILS DESIGNATED AS "TYPICAL DETAILS" APPLY GENERALLY TO THE DRAWINGS IN ALL AREAS WHERE CONDITIONS ARE SIMILAR TO THOSE DESCRIBED IN THE DETAILS.
8. ALL DIMENSIONS AND CONDITIONS OF EXISTING CONSTRUCTION SHALL BE VERIFIED BY THE CONTRACTOR AT THE JOB SITE. DIFFERENCES BETWEEN EXISTING CONSTRUCTION AND THE DRAWINGS SHALL BE REFERRED TO THE ARCHITECT. DIFFERENCES SHALL ALSO BE CLOUDED ON THE SHOP DRAWINGS.
9. THE DESIGN AND PROVISION OF ALL TEMPORARY SUPPORTS SUCH AS GUYS, BRACES, FALSEWORK, SUPPORTS AND ANCHORS FOR SAFETY LINES, CRIBBING OR ANY OTHER TEMPORARY ELEMENTS REQUIRED FOR THE EXECUTION OF THE CONTRACT ARE NOT INCLUDED IN THE DRAWINGS AND SHALL BE THE RESPONSIBILITY OF THE CONTRACTOR. TEMPORARY SUPPORTS SHALL NOT RESULT IN THE OVER STRESS OR DAMAGE OF THE ELEMENTS TO BE BRACED NOR ANY ELEMENTS USED AS BRACE SUPPORTS.
10. THE CONTRACT STRUCTURAL DRAWINGS AND SPECIFICATIONS REPRESENT THE FINISHED STRUCTURE, EXCEPT WHERE SPECIFICALLY SHOWN, AND DO NOT INDICATE THE METHOD OR MEANS OF CONSTRUCTION. THE CONTRACTOR SHALL SUPERVISE AND DIRECT THE WORK AND SHALL BE SOLELY RESPONSIBLE FOR ALL CONSTRUCTION MEANS, METHODS, PROCEDURES, TECHNIQUES, AND SEQUENCE.
11. THE ENGINEER SHALL NOT HAVE CONTROL OF, AND SHALL NOT BE RESPONSIBLE FOR, CONSTRUCTION MEANS, METHODS, TECHNIQUES, SEQUENCES, OR PROCEDURES, FOR SAFETY PRECAUTIONS AND PROGRAMS IN CONNECTION WITH THE WORK, FOR THE ACTS OR OMISSION OF THE CONTRACTOR, SUBCONTRACTOR, OR ANY OTHER PERSONS PERFORMING ANY OF THE WORK, OR FOR THE FAILURE OF ANY OF THEM TO CARRY OUT THE WORK IN ACCORDANCE WITH THE CONTRACT DOCUMENTS.
12. PERIODIC SITE OBSERVATION BY FIELD REPRESENTATIVES OF TXDOT IS SOLELY FOR THE PURPOSE OF DETERMINING IF THE WORK OF THE CONTRACTOR IS PROCEEDING IN ACCORDANCE WITH THE STRUCTURAL CONTRACT DOCUMENTS. THIS LIMITED SITE OBSERVATION IS NOT INTENDED TO BE AN EXHAUSTIVE CHECK OF THE QUALITY OR QUANTITY OF THE WORK, BUT RATHER PERIODIC IN AN EFFORT TO INFORM THE OWNER AGAINST DEFECTS AND DEFICIENCIES IN THE WORK OF THE CONTRACTOR.

SCHEDULE OF ABBREVIATIONS

A	
ACI	AMERICAN CONCRETE INSTITUTE
ADD'L	ADDITIONAL
AISC	AMERICAN INSTITUTE OF STEEL CONSTRUCTION
ASTM	AMERICAN SOCIETY FOR TESTING OF MATERIALS
AWS	AMERICAN WELDING SOCIETY
B	
BLDG	BUILDING
BM	BENCH MARK OR BEAM
BOT	BOTTOM
C	
CJ	CONTROL JOINT
CL	CENTERLINE
COL	COLUMN
CONC	CONCRETE
CONT	CONTINUOUS
D	
DIA	DIAMETER
DWL	DOWEL
E	
E	EAST
EA	EACH
EF	EACH FACE
EJ	EXPANSION JOINT
EW	EACH WAY
EXIST	EXISTING
EXT	EXTERIOR
F	
FDN	FOUNDATION
FF	FINISH FLOOR
G	
GA	GAUGE (GAGE)
GALV.	GALVANIZED
GR	GRADE
H	
HB	HOSE BIBB
HD	HOT DIPPED
HP	HIGH POINT
HORIZ	HORIZONTAL
HT	HEIGHT
I	
INSUL	INSULATION
INT	INTERIOR
J	
J	JUNCTION
JB	JUNCTION BOX
JT	JOINT
K	
KSI	THOUSAND POUNDS PER SQUARE INCH
L	
L	LENGTH
LL	LIVE LOAD
LLH	LONG LEG HORIZONTAL
LP	LOW POINT
LVL	LEVEL
M	
M	MOTOR
MAT'L	MATERIAL
MAX	MAXIMUM
MIN	MINIMUM
MPH	MILES PER HOUR
MTL	METAL
N	
N	NORTH
NO	NUMBER
NTS	NOT TO SCALE
O	
OC	ON CENTER
OH	OVERHEAD
OSL	OUTSIDE
P	
PART	PARTITION
PI	PLASTICITY INDEX
PSF	POUNDS PER SQUARE FOOT
PSI	POUNDS PER SQUARE INCH
PT	POINT
Q	
QC	QUALITY CONTROL
R	
REF	REFERENCE
REINF	REINFORCING OR (REINFORCED)
REQ'D	REQUIRED
S	
S	SOUTH
SPEC	SPECIFICATION
STD	STANDARD
STL	STEEL
STR	STRUCTURAL
T	
T&B	TOP AND BOTTOM
TxDOT	TEXAS DEPARTMENT OF TRANSPORTATION
TYP	TYPICAL
U	
UBC	UNIFORM BUILDING CODE
V	
VERT	VERTICAL
W	
W	WIDTH, WASTE OR WEST
W/	WITH
WT	WEIGHT

SYMBOLS

Ø	DIAMETER
*	CONTRACTOR MAY ADJUST THIS DIMENSION TO SUIT PREFABRICATED METAL BLDG. WALL PANELS
X / X.X	FLOOR OR FOUNDATION DETAIL NUMBER
X.X.X	FOUNDATION SECTION MARK
	DETAIL SECTION MARK
	SLOPE ARROW

PRE-ENGINEERED METAL BUILDING

1. THE DESIGN OF THE STRUCTURE SYSTEM SHALL BE CLEAR RIGID FRAME WITH STRAIGHT COLUMNS AND ROOF BEAMS WITH A STANDING SEAM ROOF AND EXPANSION CLIPS.
2. ACTUAL BUILDING LENGTH SHALL BE STRUCTURAL LINE TO STRUCTURAL LINE, AND SHALL BE THE SAME AS NOMINAL LENGTH.
3. ACTUAL BUILDING WIDTH SHALL BE STRUCTURAL LINE TO STRUCTURAL LINE AND SHALL BE NOMINAL BUILDING WIDTH
4. REFER TO BUILDING ELEVATIONS FOR ROOF SLOPE
5. SEALED SHOP DRAWINGS AND CALCULATIONS FOR METAL BUILDING WITH PORCH SHALL BE SUBMITTED FOR ENGINEER'S APPROVAL
6. ALL COMPONENTS AND PARTS OF THE STRUCTURAL SYSTEM SHALL BE AS INDICATED ON THE DRAWING AND/OR SPECIFICATIONS.
7. ALL MODIFICATIONS WILL REQUIRE ENGINEER'S REVIEW.
8. ALL REACTIONS FOR FOUNDATION DESIGN SHALL BE SUPPLIED BY PRE-ENGINEERED BUILDING MANUFACTURER. NUMBER OF ANCHOR BOLTS AND DIAMETER SHALL BE SPECIFIED BY BUILDING MANUFACTURER.
9. FOUNDATION DESIGN WILL BE PROVIDED BY OWNER
10. BUILDING SHALL BE PRODUCED IN A MANUFACTURING FACILITY THAT IS CERTIFIED BY AISC- CATEGORY MB.
11. ALL STRUCTURAL MILL SECTIONS OR WELDED PLATE SECTIONS SHALL BE DESIGNED IN ACCORDANCE WITH AISC SPECIFICATION FOR THE DESIGN FABRICATION AND ERECTION OF STRUCTURAL STEEL FOR BUILDINGS AND ALL COLD FORMED STEEL MEMBERS SHALL BE IN ACCORDANCE WITH THE AISI LATEST EDITION.
12. THE STRUCTURAL SYSTEM WILL BE DESIGNED IN ACCORDANCE WITH IBC 2003 AND THE REQUIREMENTS OF THE LOCAL CITY/TOWN

DEAD LOAD	ACTUAL WEIGHT OF MATERIALS
LIVE LOAD ROOF	20 PSF
WIND	90 MPH EXPOSURE C
SNOW	___ AS PER CODE

MECHANICAL AND OTHER ATTACHMENTS TO ROOF 7 PSF
WEIGHT OF MAJOR EQUIPMENT SHALL BE CONSIDERED INDIVIDUALLY

13. WELDING SHALL CONFORM TO AWS D1.1

STEEL LINTEL SCHEDULE

SIZE	CLEAR OPENING	REMARKS	DETAIL
L 4 X 4 X 3/8	0'-0" UP TO 8'-0"	MIN. OF 8" BEARING @ EA. END	L
L 6 X 4 X 3/8	8'-0" UP TO 11'-0"	MIN. OF 8" BEARING @ EA. END	L
L 7 X 4 X 3/8	11'-0" UP TO 16'-0"	MIN. OF 8" BEARING @ EA. END	L

STRUCTURAL NOTES

NOTE: THIS DRAWING WAS CREATED FOR PRODUCTION ON 22" x 34" SHEET SIZE. DO NOT SCALE PRINTS.

Texas Department of Transportation
125 E. 11th Street
Austin, Texas 78701-2483
(512) 416-3848
Copyright © 2005 Texas Department of Transportation

STATE OF TEXAS
ARRIAS UD DEAN
67118
REGISTERED PROFESSIONAL ENGINEER
3/23/05

SOUTH TRAVIS AREA ENGINEER AND MAINTENANCE FACILITY
AUSTIN, TRAVIS COUNTY
AUSTIN DISTRICT 14

Revisions
1
2
3

Drawn by: J.O.T.
Project No. 470400238
Date 03.23.2005
Sheet No.
S1.1
of sheets

CADFILE: T:\MNTFM\D14\US470400238\Acad\Struct\S1_1.dwg Plotted: Wed, Mar. 23, 2005 @ 3:22 PM By: SFLORE2

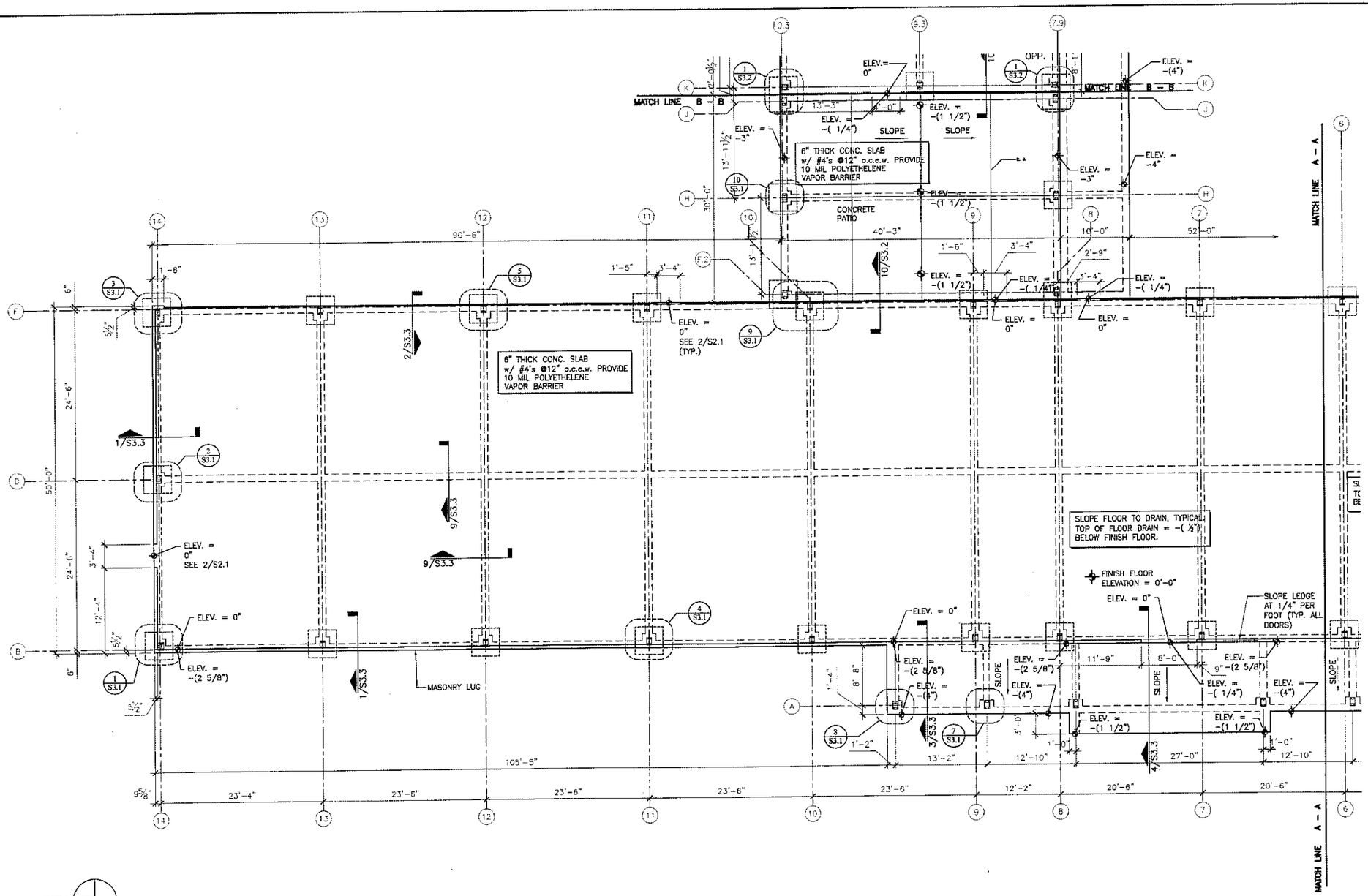

1 FOUNDATION PLAN - BUILDING 1
SCALE: 1/8" = 1'-0" PARTITIAL

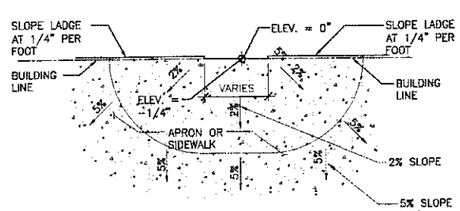

NOTES: 1. PROVIDE #5 DOWELS AT 12" O. C. AGAINST BUIDING FOUNDATION FOR SIDEWALKS LACATED AGAINST BUILDING REF. TO ARCHITECTURAL SITE PLAN

2 PLAN DETAIL @ DOOR STOOP
SCALE: 1/4" = 1'-0"

NOTES:
1. LOCATION OF WIND PORTAL FRAME AS PER PRE–ENGINEER FABRICATOR
2. SIZE OF FOOTING SHALL BE ADJUSTED TO ACCOMODATE WIND PORTAL FRAME
3. SLOPE CONCRETE APRON AT A RATE OF 2%
4. SLOPE CONCRETE AT ALL EXIT DOORS AT A RATE OF 2% (TYPICAL) STARTING AT ELEV. –1/4"
5. ASSUMED FINISH FLOOR ELEVATION = 0'–0" UNLESS NOTED OTHERWISE. SEE CIVIL DWGS. FOR ACTUAL ELEVATIONS.
6. TOP OF STRUCTURAL CONCRETE ELEVATION = FINISH FLOOR. UNLESS RECESSED TO RECEIVE TOPPING OR FLOORING MATERIALS.
7. REFER TO THE ARCHITECTURAL DRAWINGS FOR EXACT LOCATIONS OF FLOOR RECESSES, DROPS AND SLOPES NOT DIMENSIONED ON PLAN.
8. SEE PLUMBING DWG'S FOR FLOOR DRAINS

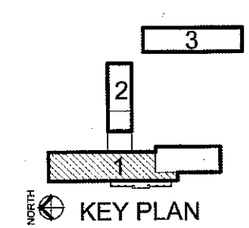

KEY PLAN

FOUNDATION PLAN - BUILDING 1

NOTE: THIS DRAWING WAS CREATED FOR PRODUCTION ON 22" x 34" SHEET SIZE. DO NOT SCALE PRINTS.

Texas Department of Transportation
125 E. 11th Street
Austin, Texas 78701-2483
(512) 416-3848
Copyright © 2005 Texas Department of Transportation

STATE OF TEXAS
GHIAS UD DEAN
67118
LICENSED PROFESSIONAL ENGINEER
3/23/05

SOUTH TRAVIS AREA ENGINEER AND MAINTENANCE FACILITY
AUSTIN, TRAVIS COUNTY
AUSTIN DISTRICT 14

Revisions

Drawn by: S. F.
Project No. 470400238
Date 03.23.2005
Sheet No.
S2.1
of sheets

CADFILE: T:\MNTFN\ID14AUS\470400238\Acad\Struc\S2_1.dwg Plotted: Wed, Mar. 23, 2005 @ 1:03 PM By: SFLORE2

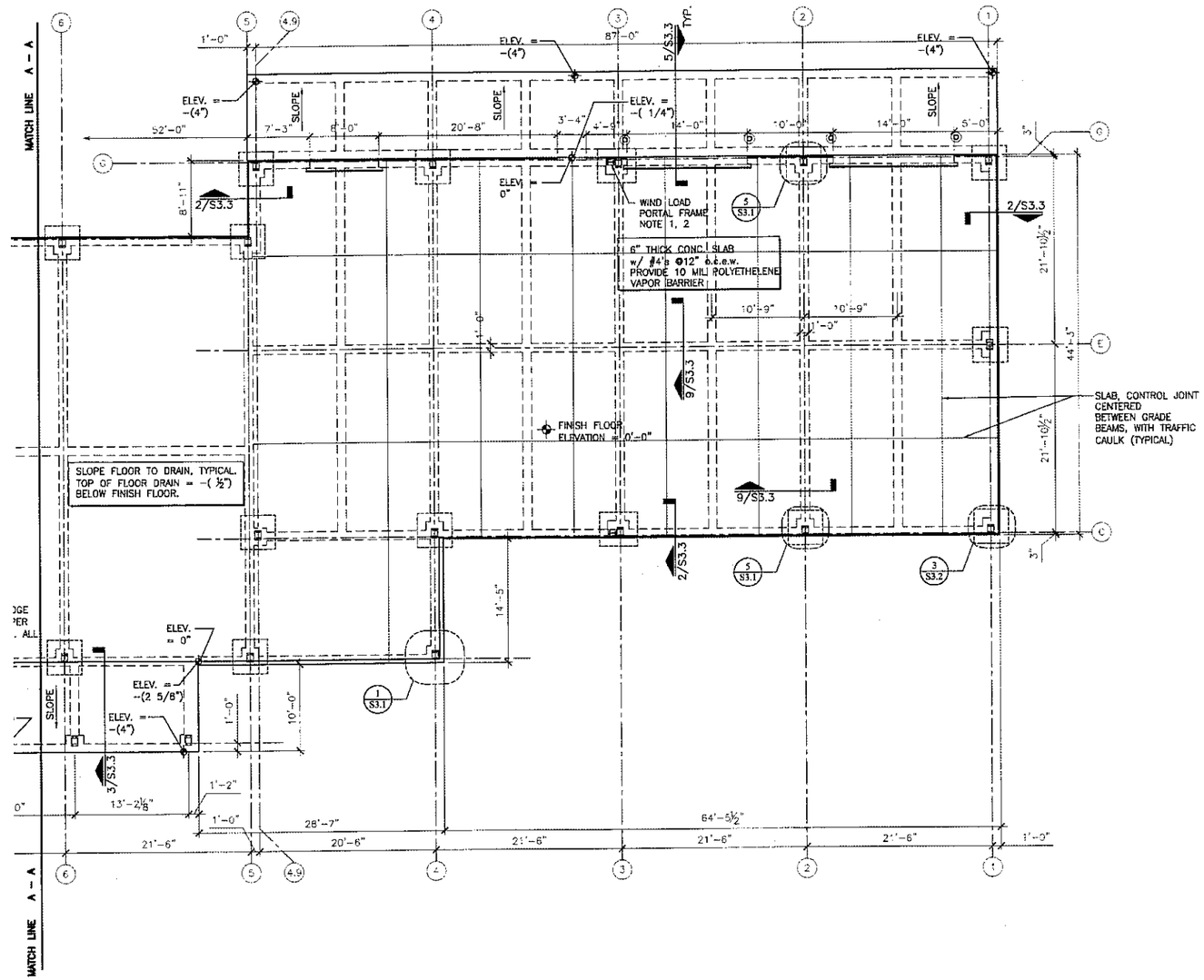

NOTES:

1. LOCATION OF WIND PORTAL FRAME AS PER PRE-ENGINEER FABRICATOR
2. SIZE OF FOOTING SHALL BE ADJUSTED TO ACCOMODATE WIND PORTAL FRAME
3. SLOPE CONCRETE APRON AT A RATE OF 2%
4. SLOPE CONCRETE AT ALL EXIT DOORS AT A RATE OF 2% (TYPICAL) STARTING AT ELEV. -1/4"
5. ASSUMED FINISH FLOOR ELEVATION = 0'-0" UNLESS NOTED OTHERWISE. SEE CIVIL DWGS. FOR ACTUAL ELEVATIONS.
6. TOP OF STRUCTURAL CONCRETE ELEVATION = FINISH FLOOR. UNLESS RECESSED TO RECEIVE TOPPING OR FLOORING MATERIALS.
7. REFER TO THE ARCHITECTURAL DRAWINGS FOR EXACT LOCATIONS OF FLOOR RECESSES, DROPS AND SLOPES NOT DIMENSIONED ON PLAN.
8. SEE PLUMBING DWG'S FOR FLOOR DRAINS

NORTH

1 FOUNDATION PLAN - BUILDING 1
SCALE: 1/8" = 1'-0"
PARTITIAL

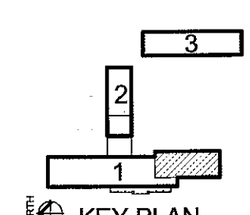

KEY PLAN

FOUNDATION PLAN - BUILIDING 1

NOTE: THIS DRAWING WAS CREATED FOR PRODUCTION ON 22" x 34" SHEET SIZE. DO NOT SCALE PRINTS.

Texas Department of Transportation
125 E. 11th Street
Austin, Texas 78701-2483
(512) 416-3048
Copyright © 2005 Texas Department of Transportation

STATE OF TEXAS
GHIAS UD DEAN
87118
LICENSED
PROFESSIONAL ENGINEER
3/23/05

SOUTH TRAVIS AREA ENGINEER AND MAINTENANCE FACILITY
AUSTIN, TRAVIS COUNTY
AUSTIN DISTRICT 14

Revisions

Drawn by: S. F.
Project No. 470400238
Date 03.23.2005
Sheet No.
S2.2
of sheets

CADFILE: T:\MNTFM\D14AUS\470400238\Acad\Struct\S2_1.dwg Plotted: Wed, Mar. 23, 2005 @ 1:09 PM By: SFLORE2

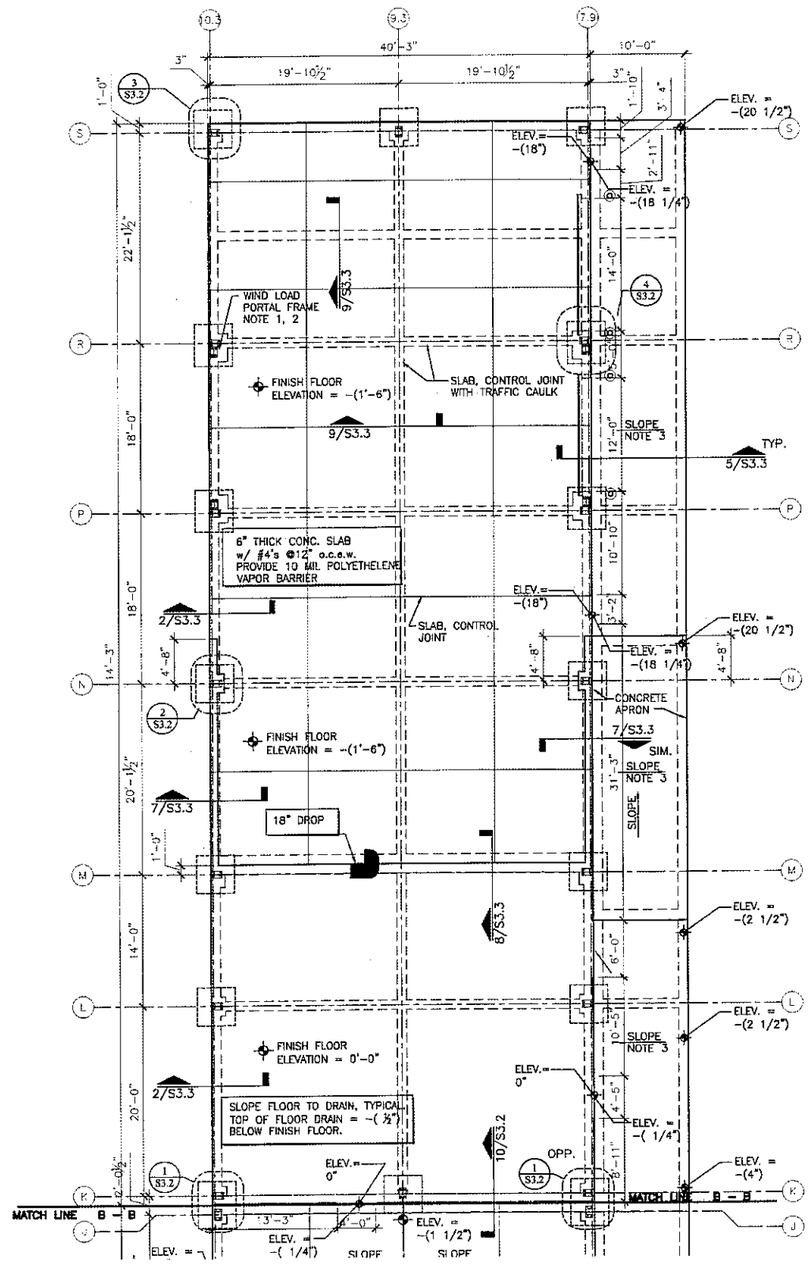

NOTES:

1. LOCATION OF WIND PORTAL FRAME AS PER PRE-ENGINEER FABRICATOR
2. SIZE OF FOOTING SHALL BE ADJUSTED TO ACCOMODATE WIND PORTAL FRAME
3. SLOPE CONCRETE APRON AT A RATE OF 2%
4. SLOPE CONCRETE AT ALL EXIT DOORS AT A RATE OF 2% (TYPICAL) STARTING AT ELEV. -1/4"
5. ASSUMED FINISH FLOOR ELEVATION = 0'-0" UNLESS NOTED OTHERWISE. SEE CIVIL DWGS. FOR ACTUAL ELEVATIONS.
6. TOP OF STRUCTURAL CONCRETE ELEVATION = FINISH FLOOR. UNLESS RECESSED TO RECEIVE TOPPING OR FLOORING MATERIALS.
7. REFER TO THE ARCHITECTURAL DRAWINGS FOR EXACT LOCATIONS OF FLOOR RECESSES, DROPS AND SLOPES NOT DIMENSIONED ON PLAN.

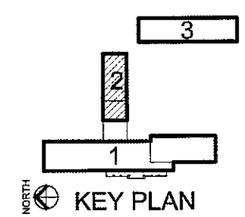

NORTH

1 FOUNDATION PLAN - BUILDING 2
SCALE: 1/8" = 1'-0" PARTIAL

FOUNDATION PLAN - BUILDING 2

Texas Department of Transportation
125 E. 11th Street
Austin, Texas 78701-2483
(512) 416-3046

Copyright © 2005 Texas Department of Transportation

STATE OF TEXAS
GHIAS UD DEAN
67118
LICENSED
PROFESSIONAL ENGINEER
3/23/05

SOUTH TRAVIS AREA ENGINEER AND MAINTENANCE FACILITY
AUSTIN, TRAVIS COUNTY
AUSTIN DISTRICT 14

Revisions

Drawn by: S. F.
Project No. 470400238
Date 03.23.2005
Sheet No.
S2.3
of sheets

CADFILE: T:\MNTF\MD14\AUS\470400238\Acad\Struct\S2_1.dwg Plotted: Wed, Mar. 23, 2005 @ 1:09 PM By: SFLORES2

NOTE: THIS DRAWING WAS CREATED FOR PRODUCTION 22"x 34" SHEET SIZE. DO NOT SCALE PRINTS.

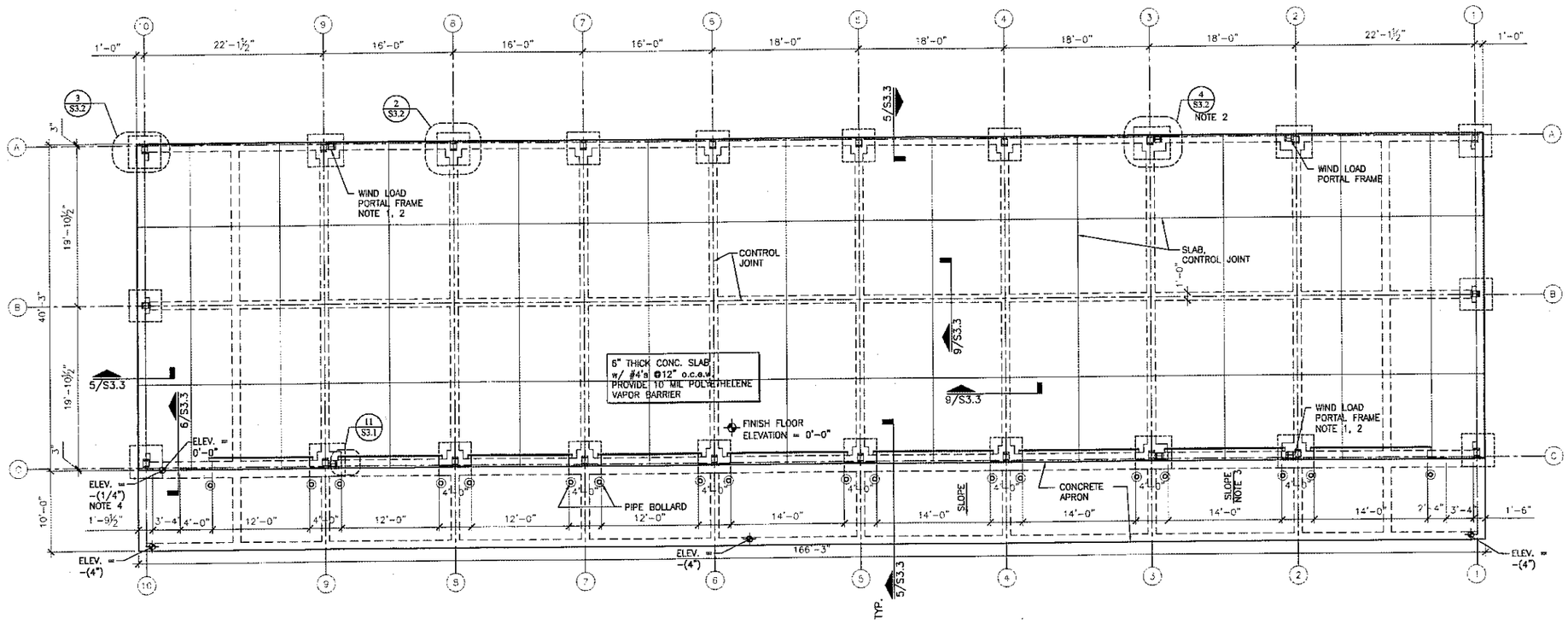

NORTH

1 FOUNDATION PLAN - BUILDING 3
SCALE: 1/8" = 1'-0"

NOTES:

1. LOCATION OF WIND PORTAL FRAME AS PER PRE-ENGINEER FABRICATOR
2. SIZE OF FOOTING SHALL BE ADJUSTED TO ACCOMODATE WIND PORTAL FRAME
3. SLOPE CONCRETE APRON AT A RATE OF 2%
4. SLOPE CONCRETE AT ALL EXIT DOORS AT A RATE OF 2% (TYPICAL) STARTING AT ELEV. -1/4"
5. ASSUMED FINISH FLOOR ELEVATION = 0'-0" UNLESS NOTED OTHERWISE. SEE CIVIL DWGS. FOR ACTUAL ELEVATIONS.
6. TOP OF STRUCTURAL CONCRETE ELEVATION = FINISH FLOOR. UNLESS RECESSED TO RECEIVE TOPPING OR FLOORING MATERIALS.
7. REFER TO THE ARCHITECTURAL DRAWINGS FOR EXACT LOCATIONS OF FLOOR RECESSES, DROPS AND SLOPES NOT DIMENSIONED ON PLAN.

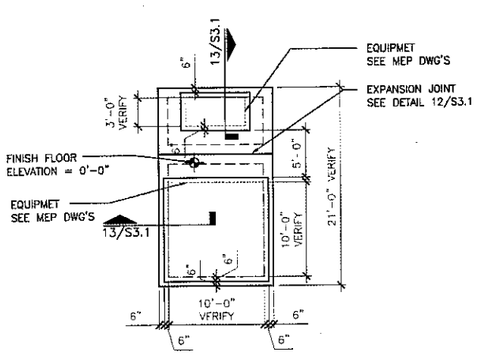

NOTE. REFER TO ARCHITECTURAL SITE PLAN FOR LOCATION

2 FOUNDATION PLAN - TRANSFORMER
SCALE: 1/8" = 1'-0"

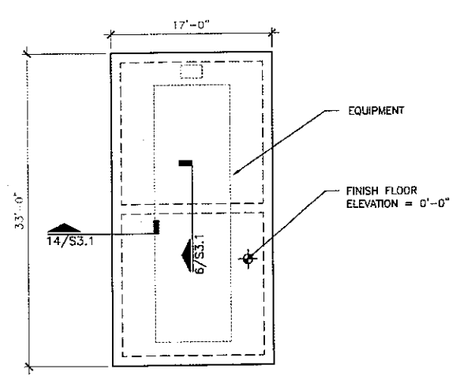

NOTE. REFER TO ARCHITECTURAL SITE PLAN FOR LOCATION

3 FOUNDATION PLAN - LPG TANK
SCALE: 1/8" = 1'-0"

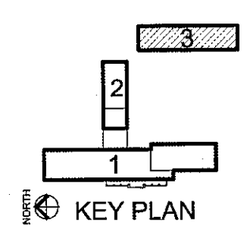

KEY PLAN

FOUNDATION PLAN - BUILDG. 3

NOTE: THIS DRAWING WAS CREATED FOR PRODUCTION ON 22" x 34" SHEET SIZE. DO NOT SCALE PRINTS.

Texas Department of Transportation
125 E. 11th Street
Austin, Texas 78701-2483
(512) 416-3048
Copyright © 2005 Texas Department of Transportation

STATE OF TEXAS
GHIAS UD DEAN
67118
LICENSED PROFESSIONAL ENGINEER
3/23/05

SOUTH TRAVIS AREA ENGINEER AND MAINTENANCE FACILITY
AUSTIN, TRAVIS COUNTY
AUSTIN DISTRICT 14

Revisions

Drawn by: S. F.
Project No. 470400238
Date 03.23.2005
Sheet No.
S2.4
of sheets

CADFILE: T:\MNTFWD14\AUSM70400238\Acad\Struct\S2_1.dwg Plotted: Wed, Mar 23, 2005 @ 1:09 PM By: SFLORE2

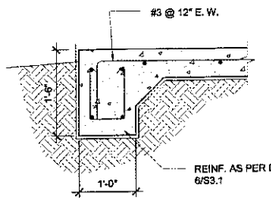

14 SECTION DETAIL
SCALE: 3/4" = 1' - 0"

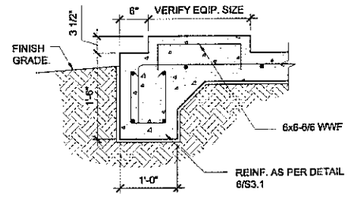

13 SECTION DETAIL
SCALE: 3/4" = 1' - 0"

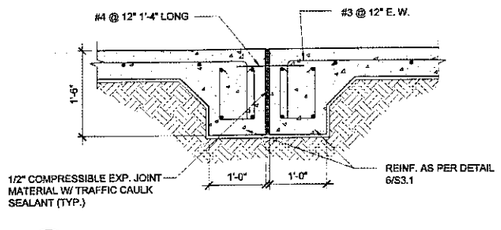

12 SECTION DETAIL
SCALE: 3/4" = 1' - 0"

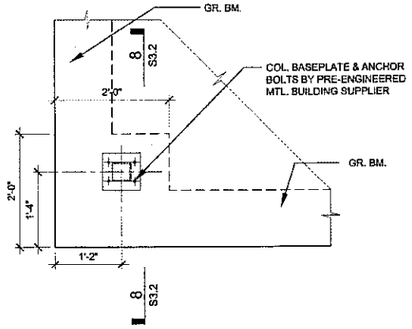

8 PLAN DETAIL
SCALE: 3/4" = 1' - 0"

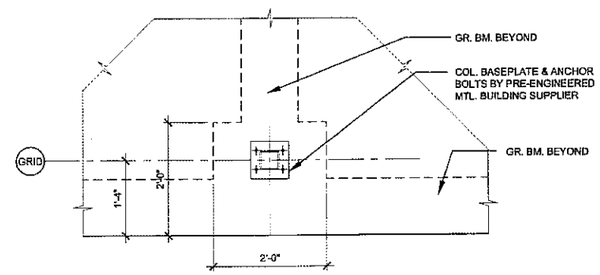

7 PLAN DETAIL
SCALE: 3/4" = 1' - 0"

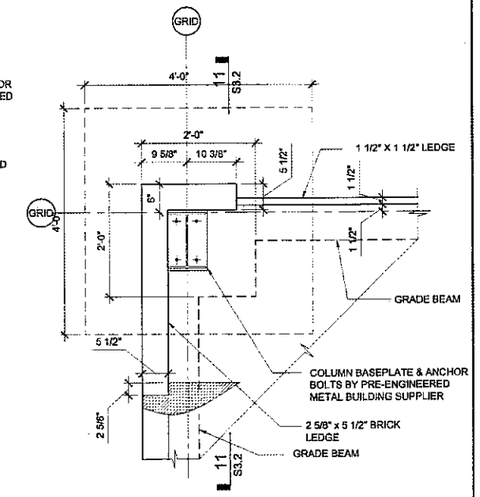

3 PLAN DETAIL
SCALE: 3/4" = 1' - 0"

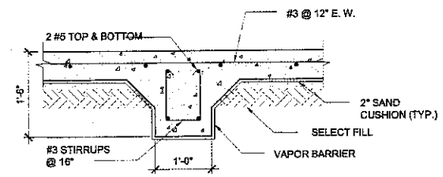

6 SECTION DETAIL
SCALE: 3/4" = 1' - 0"

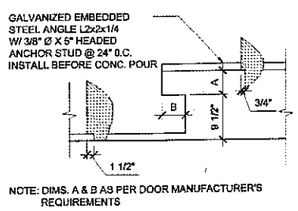

11 PLAN DETAIL
SCALE: 3/4" = 1' - 0"

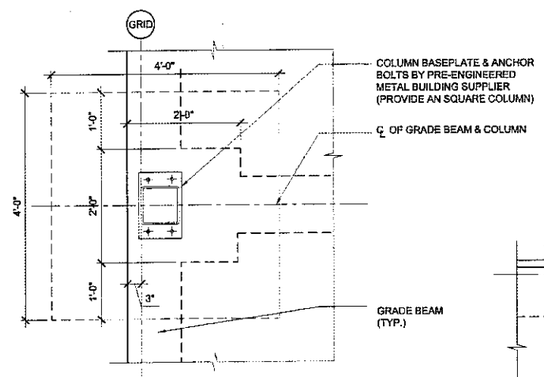

10 PLAN DETAIL
SCALE: 3/4" = 1' - 0"

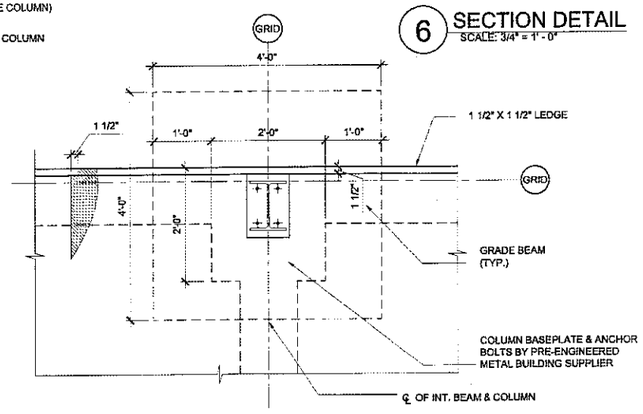

5 PLAN DETAIL
SCALE: 3/4" = 1' - 0"

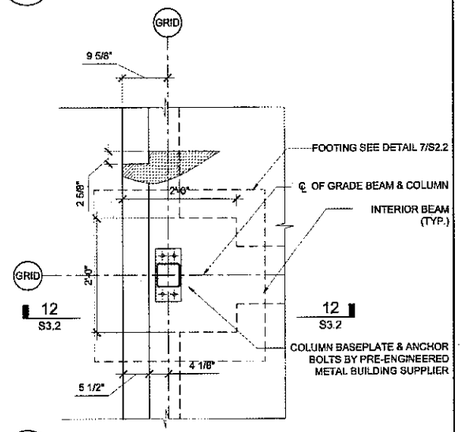

2 PLAN DETAIL
SCALE: 3/4" = 1' - 0"

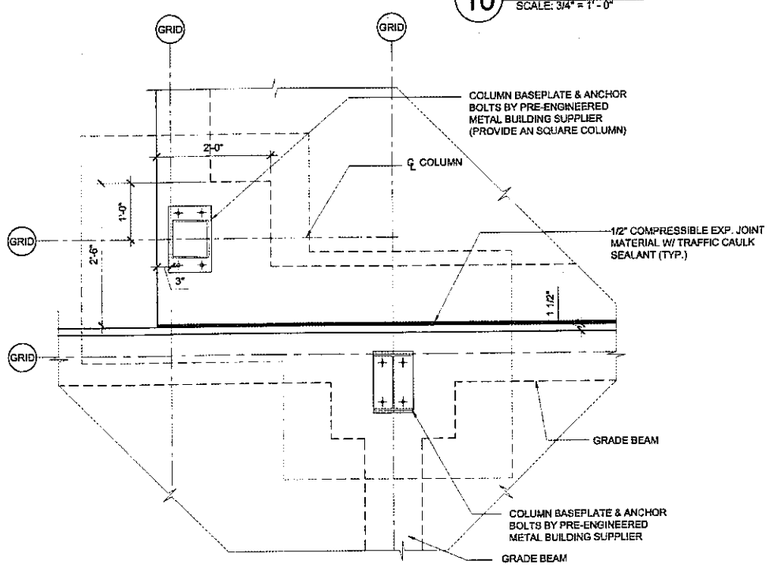

9 PLAN DETAIL
SCALE: 3/4" = 1' - 0"

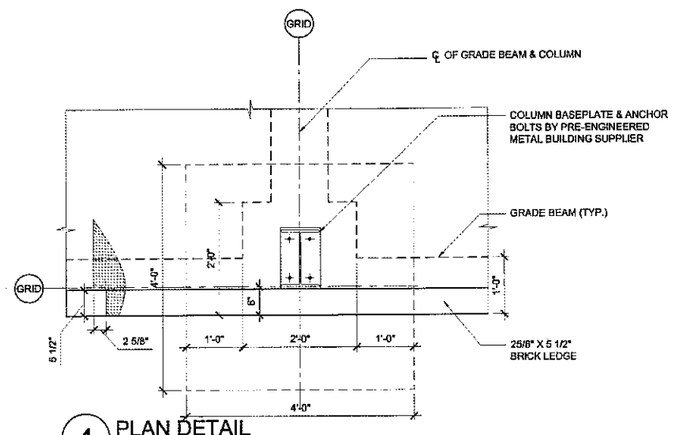

4 PLAN DETAIL
SCALE: 3/4" = 1' - 0"

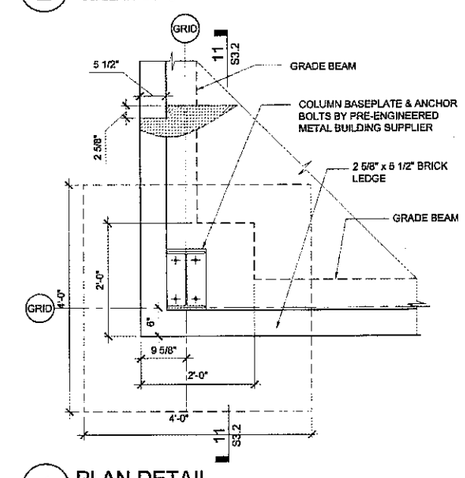

1 PLAN DETAIL
SCALE: 3/4" = 1' - 0"

FOUNDATION DETAILS

NOTE: THIS DRAWING WAS CREATED FOR PRODUCTION ON 22" x 34" SHEET SIZE. DO NOT SCALE PRINTS.

CADFILE: T:\MNTF\MD\14AUS\470400238\Acad\Struc\S3_1.dwg Plotted: Wed, Mar. 23, 2005 @ 11:56 AM By: SFLORE2

Texas Department of Transportation
125 E. 11th Street
Austin, Texas 78701-2483
(512) 416-3048

Copyright © 2005 Texas Department of Transportation

STATE OF TEXAS
GHIAS UD DEAN
67118
REGISTERED PROFESSIONAL ENGINEER
3/23/05

SOUTH TRAVIS AREA ENGINEER AND MAINTENANCE FACILITY
AUSTIN, TRAVIS COUNTY
AUSTIN DISTRICT 14

Revisions
1
2
3

Drawn by: S. F.
Project No. 470400238
Date 03.23.2005
Sheet No.

S3.1
of sheets

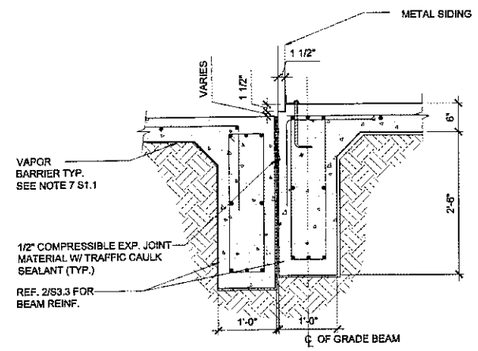

10 SECTION DETAIL
SCALE: 3/4" = 1' - 0"

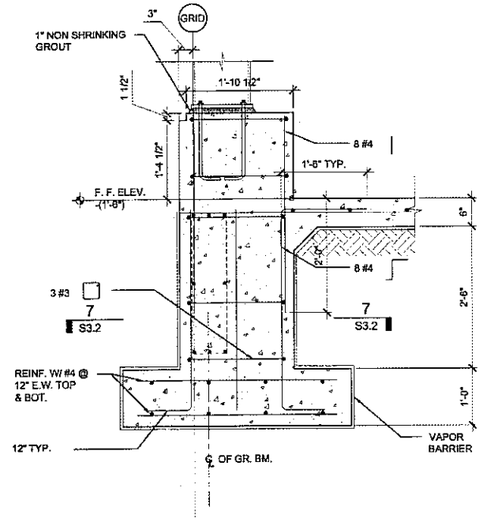

9 SECTION DETAIL
SCALE: 3/4" = 1' - 0"

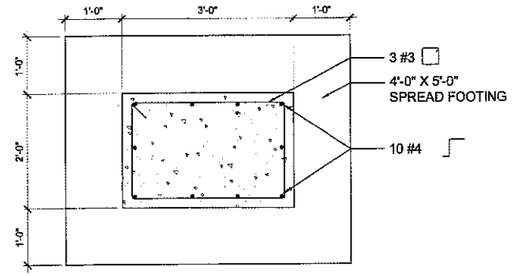

6 SECTION DETAIL
SCALE: 3/4" = 1' - 0"

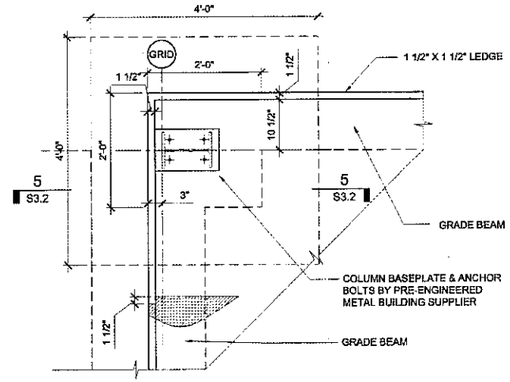

3 PLAN DETAIL
SCALE: 3/4" = 1' - 0"

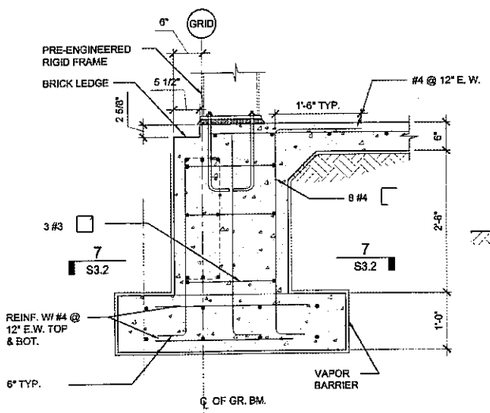

11 SECTION DETAIL
SCALE: 3/4" = 1' - 0"

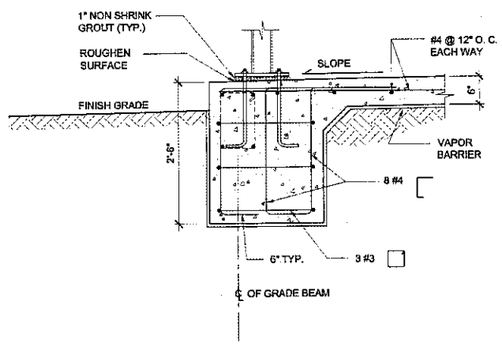

8 SECTION DETAIL
SCALE: 3/4" = 1' - 0"

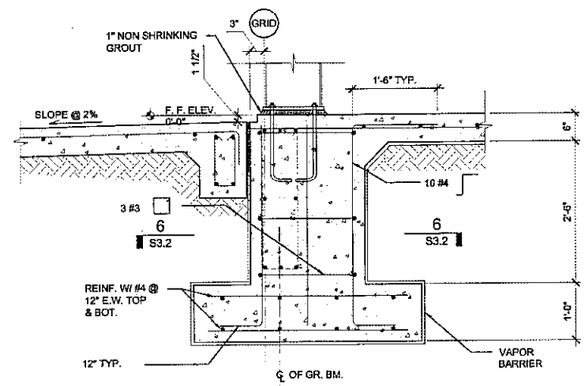

5 SECTION DETAIL
SCALE: 3/4" = 1' - 0"

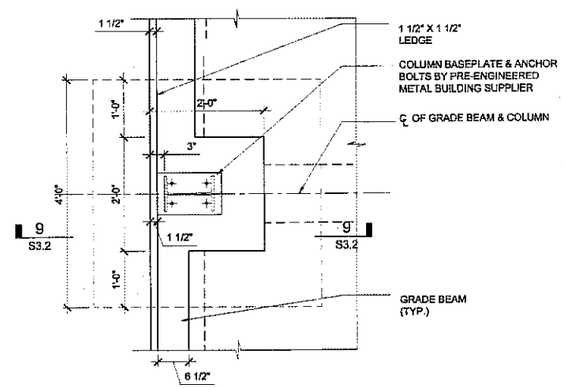

2 PLAN DETAIL
SCALE: 3/4" = 1' - 0"

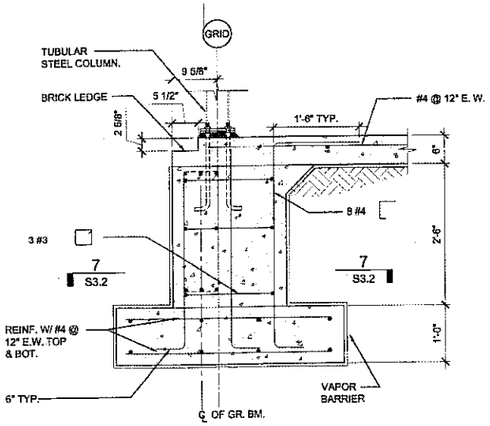

12 SECTION DETAIL
SCALE: 3/4" = 1' - 0"

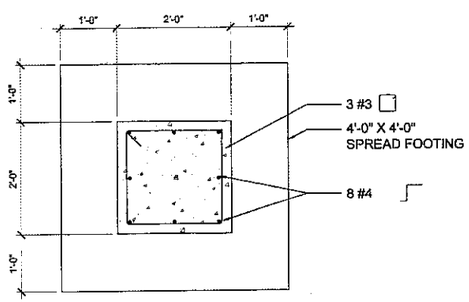

7 SECTION DETAIL
SCALE: 3/4" = 1' - 0"

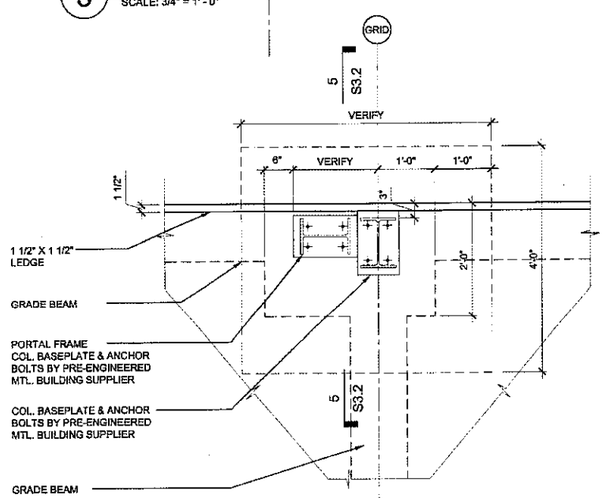

4 PLAN DETAIL
SCALE: 3/4" = 1' - 0"

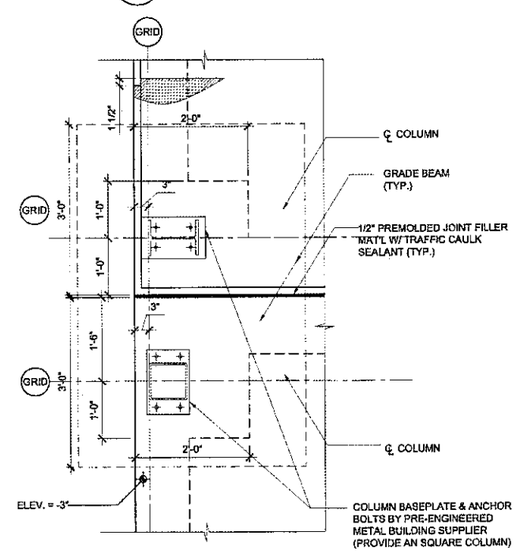

1 PLAN DETAIL
SCALE: 3/4" = 1' - 0"

FOUNDATION DETAILS

NOTE: THIS DRAWING WAS CREATED FOR PRODUCTION ON 22" x 34" SHEET SIZE. DO NOT SCALE PRINTS.

CADFILE: T:\WINTF\WD14AUS\470400238\Acad\Stru\S3_1.dwg Plotted: Wed, Mar. 23, 2005 @ 11:57 AM By: SFLORE2

Texas Department of Transportation
125 E. 11th Street
Austin, Texas 78701-2483
(512) 416-3948

Copyright © 2005 Texas Department of Transportation

STATE OF TEXAS
GHIAS UD DEAN
67118
REGISTERED PROFESSIONAL ENGINEER
3/23/05

SOUTH TRAVIS AREA ENGINEER AND MAINTENANCE FACILITY
AUSTIN, TRAVIS COUNTY
AUSTIN DISTRICT 14

Revisions

Drawn by: S. F.
Project No. 470400238
Date 03.23.2005
Sheet No.

S3.2
of sheets

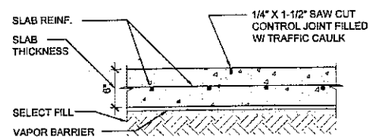

13 SECTION @ CONTROL JOINT
SCALE: 1" = 1' - 0"

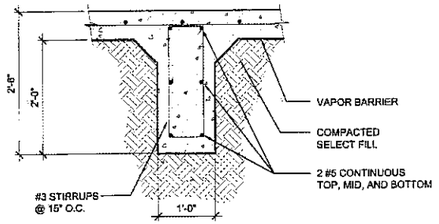

9 SECTION @ GRADE BEAM
SCALE: 1" = 1' - 0"

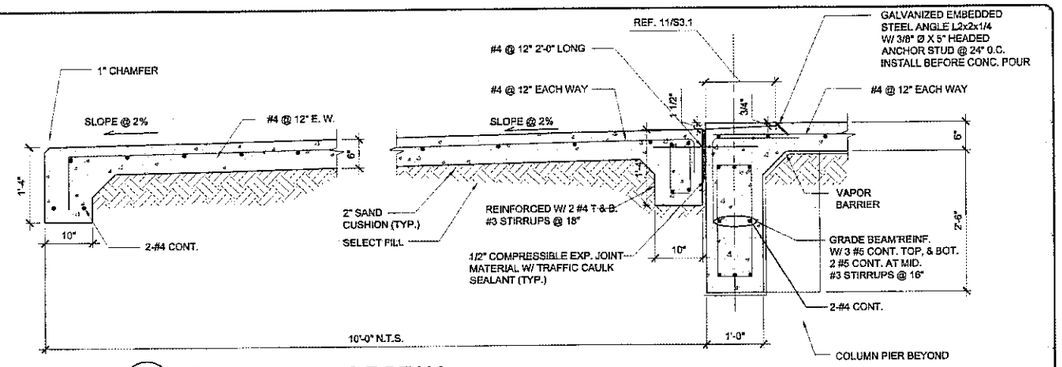

5 SECTION @ GRADE BEAM
SCALE: 3/4" = 1' - 0"

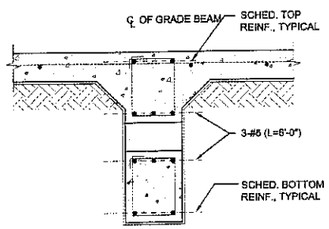

12 SECTION @ GRADE BEAM
SCALE: 3/4" = 1' - 0"

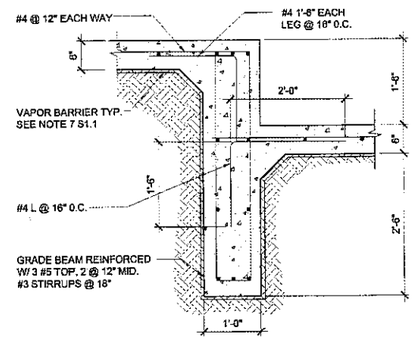

8 SECTION @ GRADE BEAM
SCALE: 3/4" = 1' - 0"

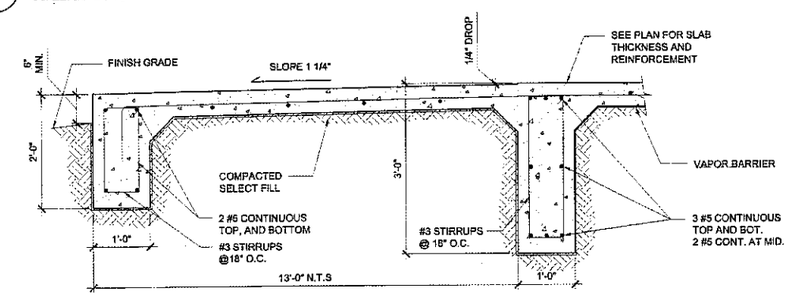

4 SECTION @ GRADE BEAM & PORCH
SCALE: 3/4" = 1' - 0"

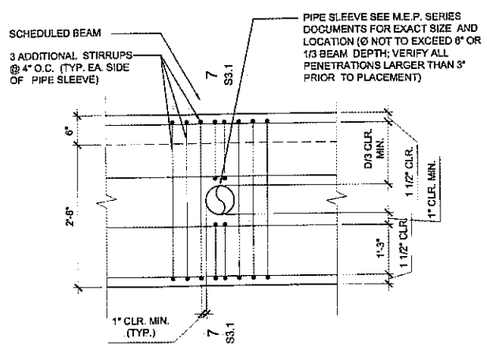

11 SECTION @ GRADE BEAM
SCALE: 3/4" = 1' - 0"

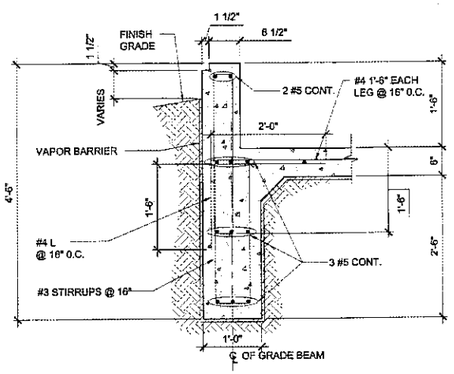

7 SECTION @ GRADE BEAM
SCALE: 3/4" = 1' - 0"

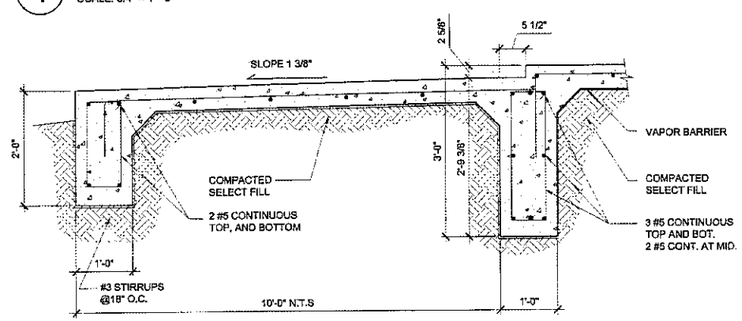

3 SECTION @ GRADE BEAM & PORCH
SCALE: 3/4" = 1' - 0"

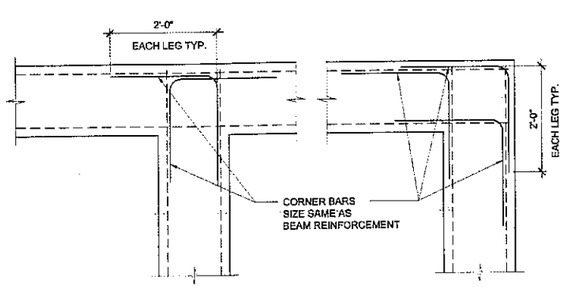

CORNER AND INTERSECTION REINFORCING APPLIES TO TOP AND BOTTOM AND INTERMEDIATE BARS

10 SECTION @ GRADE BEAM
SCALE: 3/4" = 1' - 0"

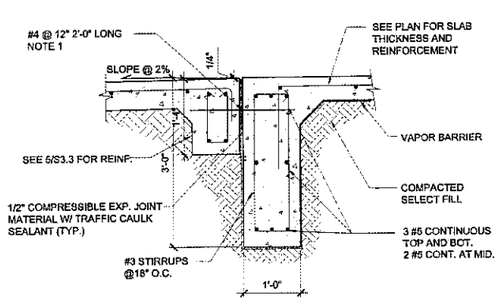

NOTES: 1. PROVIDE #5 DOWELS AT 12" O. C. AGAINST BUIDING FOUNDATION FOR SIDEWALKS LOCATED AGAINST BUILDING

6 SECTION @ GRADE BEAM
SCALE: 3/4" = 1' - 0"

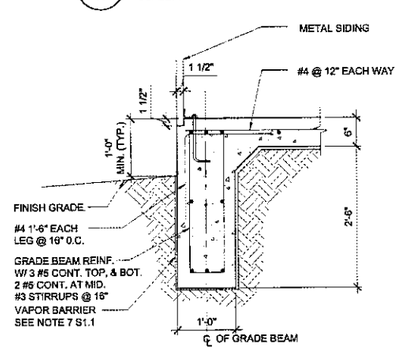

2 SECTION @ GRADE BEAM
SCALE: 3/4" = 1' - 0"

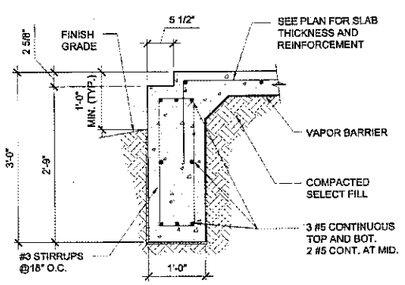

1 SECTION @ GRADE BEAM
SCALE: 3/4" = 1' - 0"

FOUNDATION DETAILS

NOTE: THIS DRAWING WAS CREATED FOR PRODUCTION ON 22" x 34" SHEET SIZE. DO NOT SCALE PRINTS.

CADFILE: T:\WNTFM\D14AUS\470400238\Acad\Struct\S3_1.dwg Plotted: Wed, Mar. 23, 2005 @ 11:57 AM By: SFLORE2

Texas Department of Transportation
125 E. 11th Street
Austin, Texas 78701-2483
(512) 416-3048
Copyright © 2005 Texas Department of Transportation

STATE OF TEXAS
GHIAS UD DEAN
67118
REGISTERED PROFESSIONAL ENGINEER
3/23/05

SOUTH TRAVIS AREA ENGINEER AND MAINTENANCE FACILITY
AUSTIN, TRAVIS COUNTY
AUSTIN DISTRICT 14

Revisions
1
2
3
4

Drawn by: S. F.
Project No. 470400238
Date 03.23.2005
Sheet No.
S3.3
of sheets

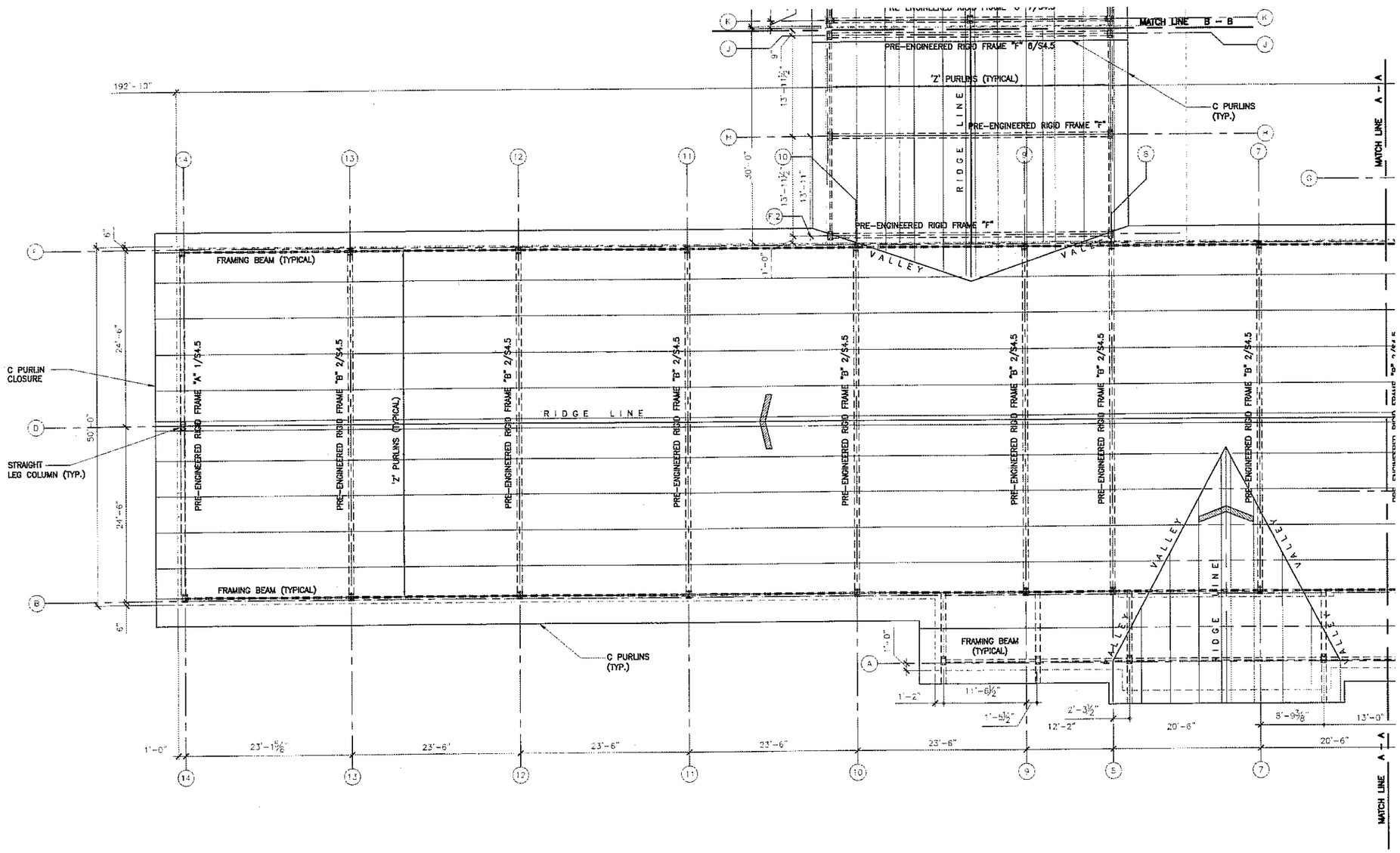

NORTH

1 FRAMING PLAN - BUILDING 1
SCALE: 1/8" = 1'-0" PARTITIAL

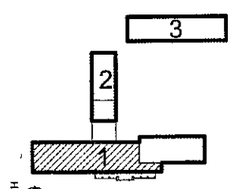

NORTH KEY PLAN

FRAMING PLAN - BUILDING 1

Texas Department of Transportation
125 E. 11th Street
Austin, Texas 78701-2483
(512) 416-2948
Copyright © 2005 Texas Department of Transportation

STATE OF TEXAS
GHIAS UD DEAN
67118
LICENSED PROFESSIONAL ENGINEER
3/23/05

SOUTH TRAVIS AREA ENGINEER AND MAINTENANCE FACILITY
AUSTIN, TRAVIS COUNTY
AUSTIN DISTRICT 14

Revisions

Drawn by: S. F.
Project No. 470400238
Date 03.23.2005
Sheet No.
S4.1
of sheets

CADFILE: T:\MNTF\MD14\US\470400238\cad\Struct\S4_1.dwg Plotted: Wed, Mar. 23, 2005 @ 1:13 PM By: SFLORE2

NOTE: THIS DRAWING WAS CREATED FOR PRODUCTION ON 22" x 34" SHEET SIZE. DO NOT SCALE PRINTS.

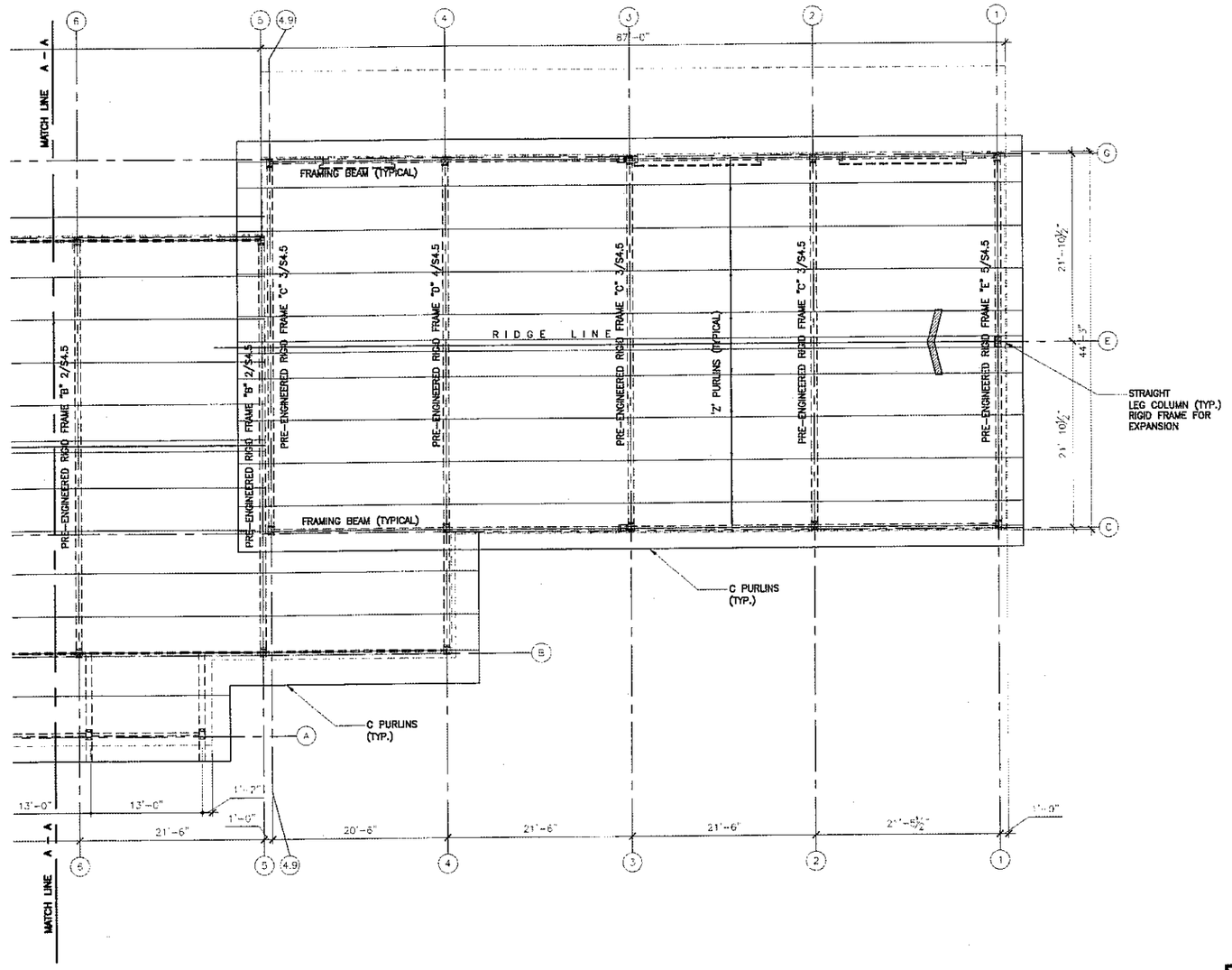

NORTH

FRAMING PLAN - BUILDING 1
SCALE: 1/8" = 1'-0"
PARTIAL

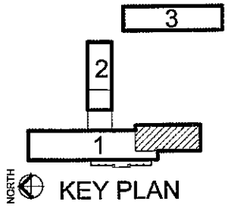

KEY PLAN

FRAMING PLAN - BUILDING 1

NOTE: THIS DRAWING WAS CREATED FOR PRODUCTION ON 22" x 34" SHEET SIZE. DO NOT SCALE PRINTS.

Texas Department of Transportation
125 E. 11th Street
Austin, Texas 78701-2483
(512) 416-3948

Copyright © 2005 Texas Department of Transportation

STATE OF TEXAS
GHIAS UD DEAN
67118
LICENSED PROFESSIONAL ENGINEER
3/23/05

SOUTH TRAVIS AREA ENGINEER AND MAINTENANCE FACILITY

AUSTIN, TRAVIS COUNTY
AUSTIN DISTRICT 14

Revisions

Drawn by: S. F.
Project No. 470400238
Date 03.23.2005
Sheet No.

S4.2
of sheets

CADFILE: T:\MNTFMD14\US\470400238\Acad\Struct\S4_1.dwg Plotted: Wed, Mar 23, 2005 @ 1:14 PM By: SFLORE2

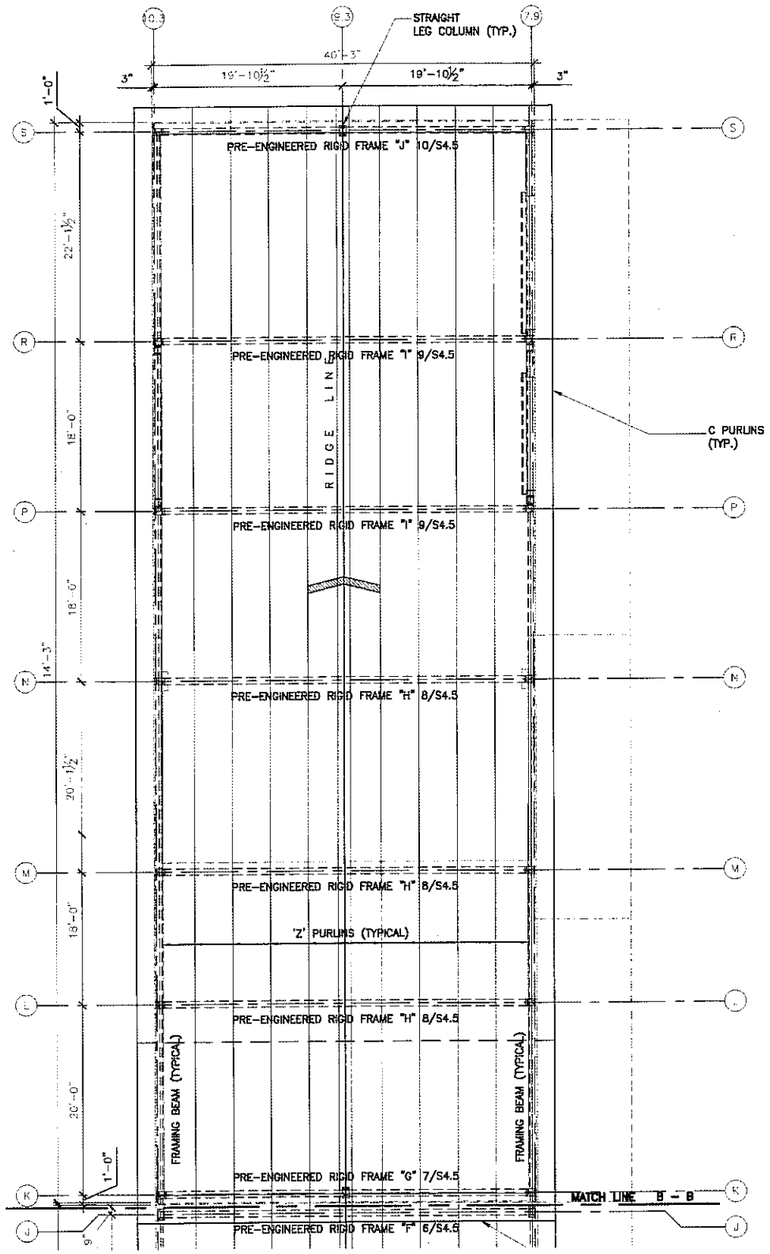

NORTH

1 FRAMING PLAN - BUILDING 2
SCALE: 1/8" = 1' - 0"
PARTITIAL

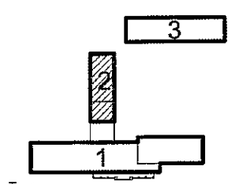

KEY PLAN

FRAMING PLAN - BUILDING 2

NOTE: THIS DRAWING WAS CREATED FOR PRODUCTION 22IN x 34" SHEET SIZE. DO NOT SCALE PRINTS.

Texas Department of Transportation
125 E. 11th Street
Austin, Texas 78701-2483
(512) 416-3046
Copyright © 2003 Texas Department of Transportation

STATE OF TEXAS
GHIAS UD DEAN
67118
LICENSED
PROFESSIONAL ENGINEER
3/23/05

SOUTH TRAVIS AREA ENGINEER AND MAINTENANCE FACILITY
AUSTIN, TRAVIS COUNTY
AUSTIN DISTRICT 14

Revisions
△
△
△
△

Drawn by:
S. F.
Project No.
470400238
Date
03.23.2005
Sheet No.
S4.3
of sheets

CADFILE: T:\MNTFMID14AUS\470400238\acad\Struct\S4_1.dwg Plotted: Wed, Mar. 23, 2005 @ 1:14 PM By: SFLORE2

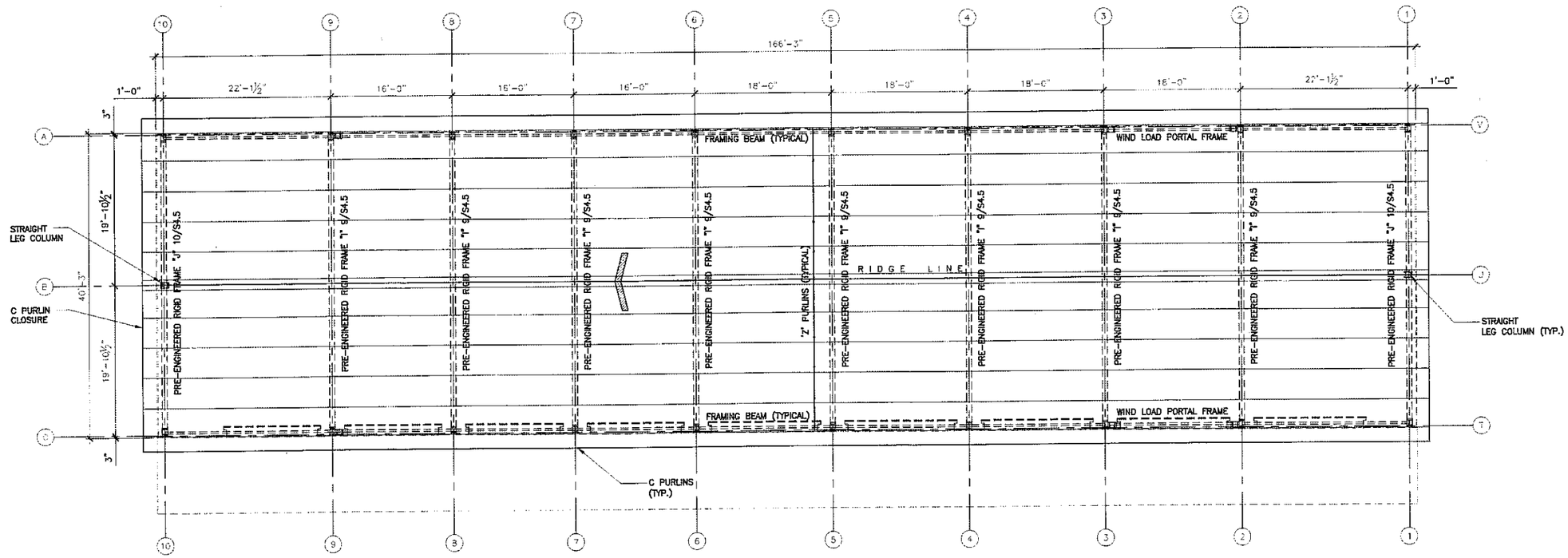

NORTH

1 FRAMING PLAN - BUILDING 3
SCALE: 1/8" = 1'-0"

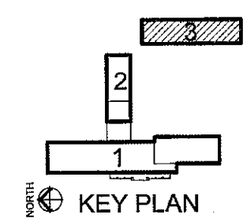

KEY PLAN

FRAMING PLAN - BUILDING 3

NOTE: THIS DRAWING WAS CREATED FOR PRODUCTION 22"x 34" SHEET SIZE. DO NOT SCALE PRINTS.

Texas Department of Transportation
125 E. 11th Street
Austin, Texas 78701-2483
(512) 416-3048

Copyright © 2005 Texas Department of Transportation

STATE OF TEXAS
GHIAS UD DEAN
67118
LICENSED PROFESSIONAL ENGINEER
3/23/05

SOUTH TRAVIS AREA ENGINEER AND MAINTENANCE FACILITY
AUSTIN, TRAVIS COUNTY
AUSTIN DISTRICT 14

Revisions

Drawn by: S. F.
Project No. 470400238
Date 03.23.2005
Sheet No.
S4.4
of sheets

CADFILE: T:\MNTFWD14AUS\470400238\cad\Struct\S4_1.dwg Plotted: Wed, Mar. 23, 2005 @ 1:15 PM By: SFLORE2

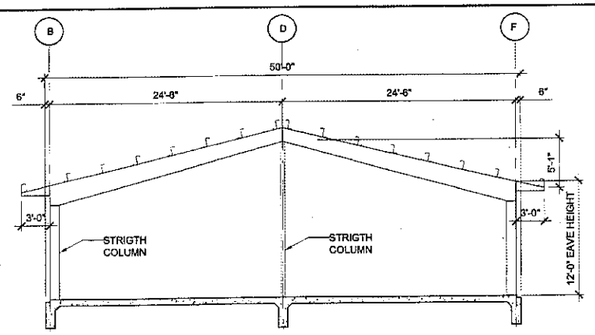

1 PRE-ENGINEERED RGID FRAME "A"
SCALE: 1/8" = 1' - 0"
STRIGTH COLUNS

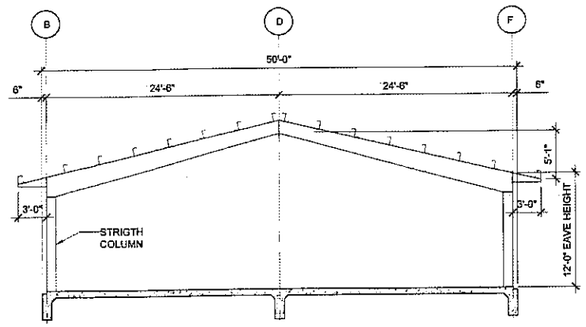

2 PRE-ENGINEERED RIGID FRAME "B"
SCALE: 1/8" = 1' - 0"
STRIGTH COLUMNS

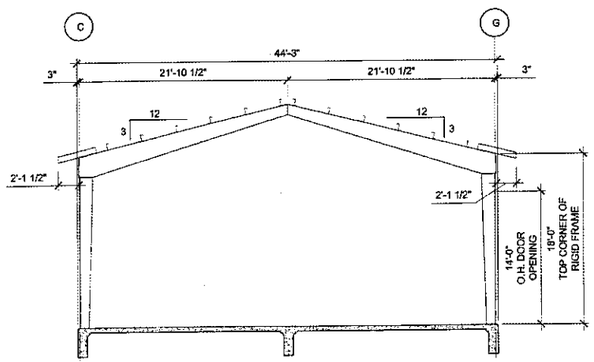

3 PRE-ENGINEERED RIGID FRAME "C"
SCALE: 1/8" = 1' - 0"

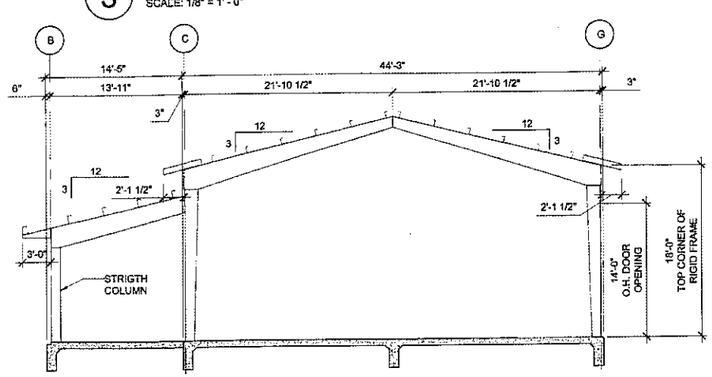

4 PRE-ENGINEERED RGID FRAME "D"
SCALE: 1/8" = 1' - 0"

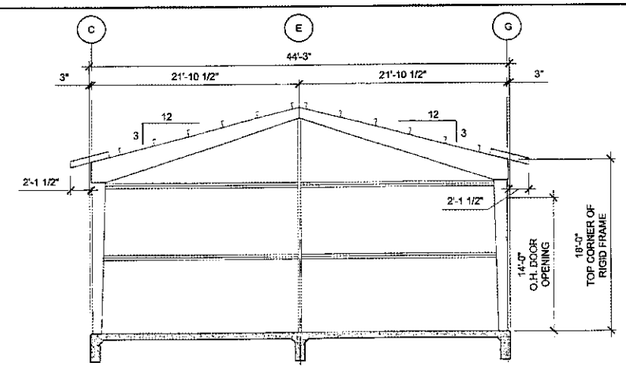

5 PRE-ENGINEERED RIGID FRAME "E"
SCALE: 1/8" = 1' - 0"
RIGID FRAME FOR FUTURE EXPANSION

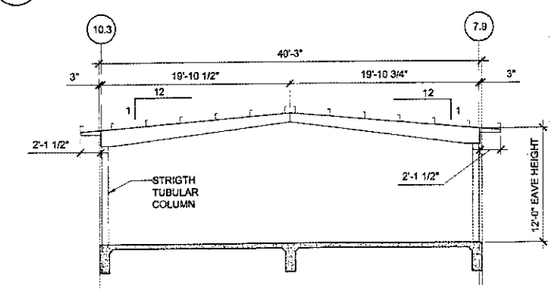

6 PRE-ENGINEERED RIGID FRAME "F"
SCALE: 1/8" = 1' - 0"
STRIGTH TUBULAR COLUMNS

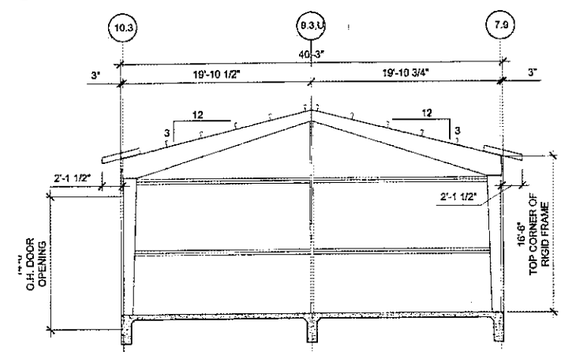

7 PRE-ENGINEERED RGID FRAME "G"
SCALE: 1/8" = 1' - 0"

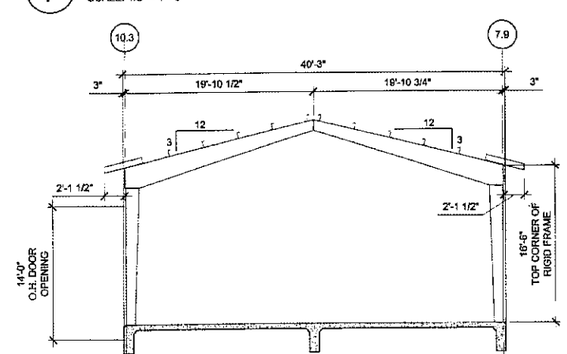

8 PRE-ENGINEERED RIGID FRAME "H"
SCALE: 1/8" = 1' - 0"

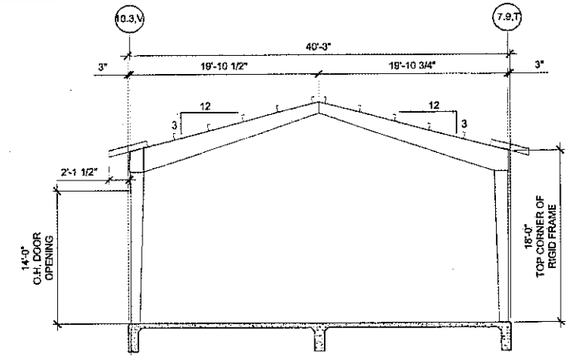

9 PRE-ENGINEERED RIGID FRAME "I"
SCALE: 1/8" = 1' - 0"

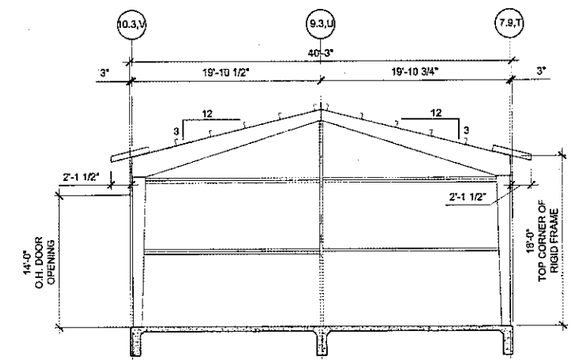

10 PRE-ENGINEERED RIGID FRAME "J"
SCALE: 1/8" = 1' - 0"

FRAMING SECTION

NOTE: THIS DRAWING WAS CREATED FOR PRODUCTION ON 22" x 34" SHEET SIZE. DO NOT SCALE PRINTS.

CADFILE: T:\MAINTEN\0114AUS\470400238\Acad\Struc\S4_5.dwg Plotted: Wed, Mar. 23, 2005 @ 1:16 PM By: SFLORE2

Texas Department of Transportation
125 E. 11th Street
Austin, Texas 78701-2483
(512) 416-3048

Copyright © 2005 Texas Department of Transportation

STATE OF TEXAS
GHIAS UD DEAN
67118
LICENSED
PROFESSIONAL ENGINEER
3/23/05

SOUTH TRAVIS AREA ENGINEER AND MAINTENANCE FACILITY
AUSTIN, TRAVIS COUNTY
AUSTIN DISTRICT 14

Revisions

Drawn by:
S. F.
Project No.
470400238
Date
03.23.2005
Sheet No.
S4.5
of sheets

TRAVIS COUNTY, TEXAS

SOUTH TRAVIS AREA ENGINEER AND MAINTENANCE FACILITY

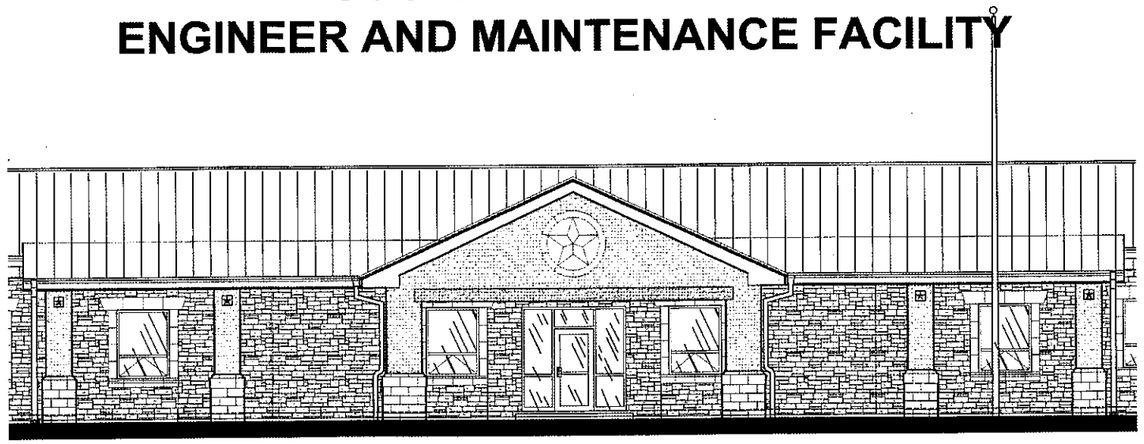

BUILDING SUMMARY:

BUILDING 1	13,812 SQ. FT. @ OFFICE AND SHOP BUILDING 9,201 SQUARE FEET OF OFFICE AREA 4,611 SQUARE FEET OF SHOP
BUILDING 2	4,598 SQ. FT. @ LABORATORY AND STORAGE BUILDING 1,460 SQUARE FEET OF LABORATORY AREA 3,138 SQUARE FEET OF STORAGE
BUILDING 3	6,692 SQ. FT. @ EQUIPMENT STORAGE BUILDING

PARKING SUMMARY:

20 - 11' x 20' SPACES
27 - 10' x 20' SPACES
5 - VAN ACCESSIBLE SPACES
52 - TOTAL SPACES PROVIDED

SCOPE OF WORK:

THIS PROJECT INCLUDES THE CONSTRUCTION OF AN OFFICE AND SHOP BUILDING, LABORATORY AND STORAGE BUILDING, EQUIPMENT STORAGE BUILDING, AND A FUEL STATION. SITE IMPROVEMENT WORK INCLUDES SERVICE UTILITIES, ASPHALT AND CONCRETE DRIVES, PARKING LOTS, SECURITY FENCING AND LANDSCAPING.

Texas Department of Transportation - Maintenance Division
150 East Riverside Drive
Austin, Texas 78704
(512) 416-3048
AREA ENGINEER AND MAINTENANCE FACILITY
Austin, Texas
Roel Bazan - Project Manager - (512) 416-2357

Copyright © 2005 Texas Department of Transportation

PROJECT:
SOUTH TRAVIS AREA ENGINEER AND MAINTENANCE FACILITY

IH 35 Frontage Road and Brandt Road
AUSTIN, TRAVIS COUNTY, TEXAS
AUSTIN DISTRICT #14
PROJECT NUMBER: CBC-47-040-0238
BID DATE: MAY 11, 2005

INDEX OF DRAWINGS

GENERAL
G1.1 ABBREVIATIONS & SYMBOLS

CIVIL
C1.1 GENERAL NOTES
C1.2 DIMENSIONAL PLAN
C2.1 EROSION & SEDIMENTATION CONTROL
C3.1 SITE GRADING & STORM SEWER
C3.2 STORM SEWER PROFILES
C4.1 WATER & WASTEWATER PLAN
C4.2 WATER & WASTEWATER PLAN
C4.3 WASTEWATER PROFILES
C5.1 CIVIL DETAILS
C5.2 CIVIL DETAILS
C5.3 CIVIL DETAILS
C5.4 CIVIL DETAILS
C5.5 CIVIL DETAILS
C5.6 TREE PROTECTION
C5.1 CIVIL DETAILS

ARCHITECTURAL
A1.1 SITE PLAN
A1.2 SITE PLAN
A1.3 SITE DETAILS
A1.4 SITE DETAILS
A1.5 ENLARGED SITE GRADING PLAN
A2.1 FLOOR PLAN – BUILDING 1
A2.2 FLOOR PLAN – BUILDING 1
A2.3 FLOOR PLAN – BUILDING 2
A2.4 FLOOR PLAN – BUILDING 3
A2.5 FUEL STATION / LPG PLANS & DETAILS
A3.1 ROOF PLAN – BUILDING 1
A3.2 ROOF PLAN – BUILDING 1
A3.3 ROOF PLAN – BUILDING 2
A3.4 ROOF PLAN – BUILDING 3
A3.5 ROOF DETAILS
A4.1 REFLECTED CEILING PLAN – BUILDING 1
A4.2 REFLECTED CEILING PLAN – BUILDING 1
A4.3 REFLECTED CEILING PLAN – BUILDING 2
A4.4 REFLECTED CEILING PLAN – BUILDING 3
A5.1 EXTERIOR ELEVATIONS
A5.2 EXTERIOR ELEVATIONS
A5.3 EXTERIOR ELEVATIONS
A6.1 TOILETS – PLANS & ELEVATIONS
A6.2 MILLWORK ELEVATIONS
A6.3 MILLWORK SECTIONS
A6.4 MILLWORK SECTIONS
A6.5 MILLWORK DETAILS
A7.1 BUILDING SECTIONS
A7.2 BUILDING SECTIONS
A7.3 BUILDING SECTIONS
A8.1 PARTITION TYPES
A8.2 WALL SECTIONS
A8.3 WALL SECTIONS
A8.4 WALL SECTIONS
A8.5 WALL SECTIONS
A9.1 FINISH SCHEDULE & DETAILS
A9.2 DOOR SCHEDULE – DOOR & WINDOW
A9.3 DOOR DETAILS
A9.4 DOOR AND WINDOW DETAILS
A9.5 PLAN DETAILS
A9.6 DETAILS
A11.1 TEXAS ACCESSIBILITY STANDARDS

LANDSCAPE
L1 TREE PROTECTION PLAN
L2 TREE PROTECTION DETAILS
L3 LANDSCAPE DETAILS
L4 LANDSCAPE DETAILS
L5 IRRIGATION PLAN
L6 VEGETATION SCREENING PLAN
L7 LANDSCAPE SUMMARIES
L8 BED LAYOUT
L9 PLANTING AT BUILDING

STRUCTURAL
S1.1 STRUCTURAL NOTES
S2.1 FOUNDATION PLAN – BUILDING 1
S2.2 FOUNDATION PLAN – BUILDING 1
S2.3 FOUNDATION PLAN – BUILDING 2
S2.4 FOUNDATION PLAN – BUILDING 3
S3.1 FOUNDATION DETAILS
S3.2 FOUNDATION DETAILS
S3.3 FOUNDATION DETAILS
S4.1 FRAMING PLAN – BUILDING 1
S4.2 FRAMING PLAN – BUILDING 1
S4.3 FRAMING PLAN – BUILDING 2
S4.4 FRAMING PLAN – BUILDING 3
S4.5 FRAMING SECTIONS

MECHANICAL
M2.1 MECHANICAL PLAN – BLDG. 1
M2.2 MECHANICAL PLAN – BLDG. 1
M2.3 MECHANICAL PLAN – BLDG. 2
M2.4 MECHANICAL PLAN – BLDG. 3
M4.1 MECHANICAL SCHEDULES
M4.2 MECHANICAL SCHEDULES
M5.1 MECHANICAL DETAILS

PLUMBING
P2.1 PLUMBING PLAN – BLDG. 1
P2.2 PLUMBING PLAN – BLDG. 1
P2.3 PLUMBING PLAN – BLDG. 2
P3.1 PLUMBING RISER DIAGRAMS
P3.2 PLUMBING RISER DIAGRAMS
P4.1 PLUMBING SCHEDULES
P5.1 PLUMBING DETAILS

ELECTRICAL
E1.1 ELECTRICAL AND GAS SITE PLAN
E2.1 LIGHTING PLAN – BLDG. 1
E2.2 LIGHTING PLAN – BLDG. 1
E2.3 LIGHTING PLAN – BLDG. 2
E2.4 LIGHTING PLAN – BLDG. 3
E2.5 POWER PLAN – BLDG. 1
E2.6 POWER PLAN – BLDG. 1
E2.7 POWER PLAN – BLDG. 2
E2.8 POWER PLAN – BLDG. 3
E2.9 GAS DETECTION SYSTEM – BLDG. 1
E2.91 POWER & SPECIAL SYSTEMS PLAN – FUEL STATION
E3.1 ELECTRICAL RISER, LEGEND & LIGHTING SCHEDULE
E4.1 ELECTRICAL PANEL BOARD SCHEDULES
E4.2 ELECTRICAL PANEL BOARD SCHEDULES
E5.1 ELECTRICAL DETAILS
EDV VOICE & DATA DETAILS
FS.2.1 FUEL STATION SCHEDULE & PLAN

STATE OF TEXAS – DAVID H. HAM – 46772 – REGISTERED PROFESSIONAL ENGINEER – 3/23/05

CIVIL ENGINEER
DAVID HAM, PE
Facilities Management
Maintenance Div., TxDOT
150 E. Riverside Drive
Austin, Texas 78704
(512) 416-3256
(512) 416-3078 (FAX)

REGISTERED ARCHITECT – ROEL BAZAN – 14289 – STATE OF TEXAS – 3/23/05

ARCHITECT
ROEL BAZAN, RA
Facilities Management
Maintenance Div., TxDOT
150 E. Riverside Drive
Austin, Texas 78704
(512) 416-2357
(512) 416-3078 (FAX)

STATE OF TEXAS – KERRY O. BLACKMON – 1251 – REGISTERED LANDSCAPE ARCHITECT – 03/23/05

LANDSCAPE ARCHITECT
KERRY O. BLACKMON
Austin HQ - Landscape TxDOT
7901 North IH35
Austin, Texas 78761
(512) 832-7097
(512) 832-7148 (FAX)

STATE OF TEXAS – GHIAS UD DEAN – 67116 – REGISTERED PROFESSIONAL ENGINEER – 3/23/05

STRUCTURAL ENGINEER
GHIAS DEAN, PE
Facilities Management
Maintenance Div., TxDOT
150 E. Riverside Drive
Austin, Texas 78704
(512) 416-3057
(512) 416-2941 (FAX)

STATE OF TEXAS – CARL OWEN NIX – 93674 – LICENSED PROFESSIONAL ENGINEER – 3/23/05

MECHANICAL ENGINEER
PLUMBING ENGINEER
CARL NIX, PE
Facilities Management
Maintenance Div., TxDOT
150 E. Riverside Drive
Austin, Texas 78704
(512) 416-3075
(512) 416-3078 (FAX)

STATE OF TEXAS – ROBERT S. RAY – 40152 – LICENSED PROFESSIONAL ENGINEER – 3/23/05

ELECTRICAL ENGINEER
BOB RAY, PE
Facilities Management
Maintenance Div., TxDOT
150 E. Riverside Drive
Austin, Texas 78704
(512) 416-3257
(512) 416-3078 (FAX)

AREA ENGINEER AND MAINTENANCE FACILITY
PROJECT NUMBER: CBC-47-040-0238

SCHEDULE OF ABBREVIATIONS

A

A	AMPERE
AB	ANCHOR BOLT
ABV	ABOVE
A/C	AIR CONDITIONING
ACC	ACCESS
ACI	AMERICAN CONCRETE INSTITUTE
ACOUST	ACOUSTICAL
ACU	AIR CONDITIONING UNIT
ADA	AMERICANS WITH DISABILITIES ACT
ADD'L	ADDITIONAL
ADD	ADDITION OR ADDITIVE
ADH	ADHESIVE
ADJ	ADJACENT OR ADJUSTABLE
AFF	ABOVE FINISH FLOOR
AGG	AGGREGATE
AHJ	AUTHORITY HAVING JURISDICTION
AISC	AMERICAN INSTITUTE OF STEEL CONSTRUCTION
ALT	ALTERNATE
ALUM	ALUMINUM
ANC	ANCHOR
APA	AMERICAN PLYWOOD ASSOCIATION
APPROX	APPROXIMATELY
ARCH	ARCHITECT(URAL)
ASM	SMACNA ARCHITECTURAL SHEET METAL MANUAL
ASPH	ASPHALT
ASTM	AMERICAN SOCIETY FOR TESTING OF MATERIALS
ATC	ACOUSTICAL TILE CEILING
AUTO	AUTOMATIC
AUX	AUXILIARY

B

B/F	BELOW FLOOR
BD	BOARD
BEL	BELOW
BET	BETWEEN
BLDG	BUILDING
BLK	BLOCK
BLKG	BLOCKING
BM	BENCH MARK OR BEAM
BOT	BOTTOM
BRG	BEARING
BRZ	BRONZE
BUR	BUILT-UP ROOF(ING)

C

C	CHANNEL OR CONDUIT
CAB	CABINET
CB	CATCH BASIN
C/C	CENTER TO CENTER
CCT	CIRCUIT
CER	CERAMIC
CFM	CUBIC FEET PER MINUTE
CG	CORNER GUARD
CHT	CEILING HEIGHT
CI	CAST IRON
CIP	CAST IRON PIPE OR CAST IN PLACE
CISP	CAST IRON SOIL PIPE
CJ	CONTROL JOINT
CL	CENTERLINE
CLG	CEILING
CLO	CLOSET
CLR	CLEAR
CMU	CONCRETE MASONRY UNIT
CO	CLEANOUT
COMP	COMPOSITION
COMPR	COMPRESSIBLE
CONC	CONCRETE
CONF	CONFER OR CONFERENCE
CONN	CONNECTION
CONST	CONSTRUCTION
CONT	CONTINUOUS
CONTR	CONTRACTOR
CPT	CARPET(ED)
CR	COLD ROLLED
CRC	COLD ROLLED CHANNEL
CSK	COUNTERSINK (SUNK)
CSMT	CASEMENT
CT	CERAMIC TILE
CTR	CENTER
CW	COLD WATER

D

D	DEPTH OR DRAIN
DBL	DOUBLE
DC	DIRECT CURRENT
DCO	DOUBLE CLEANOUT
DEMO	DEMOLITION
DET	DETAIL
DF	DRINKING FOUNTAIN
DHW	DOMESTIC HOT WATER
DI	DUCTILE IRON
DIA	DIAMETER
DIAG	DIAGONAL
DN	DOWN
DR	DOOR OR DRIVE
DS	DOWNSPOUT
DTL	DETAIL
DWC	DRYWALL CHANNEL
DWG	DRAWING
DWL	DOWEL

E

E	EAST
EA	EACH
ECJ	EDGE CONTROL JOINT
EEW	EMERGENCY EYE WASH
EF	EACH FACE
EIFS	EXTERIOR INSULATION AND FINISH SYSTEM
EJ	EXPANSION JOINT
EL	ELEVATOR
ELEC	ELECTRIC(AL)
ELEV	ELEVATION
EMER	EMERGENCY
EMH	ELECTRICAL MANHOLE
EQ	EQUAL
EQUIP	EQUIPMENT
ESE	EMERGENCY EYE SHOWER
EW	EACH WAY
EW-EF	EACH WAY - EACH FACE
EWC	ELECTRIC WATER COOLER
EWH	ELECTRIC WATER HEATER
EXH	EXHAUST
EXIST	EXISTING
EXP	EXPOSED
EXP JT	EXPANSION JOINT
EXT	EXTERIOR
EXTEN	EXTENSION

F

F	FIRE PIPE
FA	FIRE ALARM
FCO	FLOOR CLEANOUT
FD	FLOOR DRAIN
FDC	FIRE DEPT. CONNECTION
FDN	FOUNDATION
FE	FIRE EXTINGUISHER
FEC	FIRE EXTINGUISHER CABINET
FF	FINISH FLOOR
FFE	FINISH FLOOR EXISTING
FH	FIRE HYDRANT
FHC	FIRE HOSE CABINET
FIN	FINISH
FIX	FIXTURE
FL	FLOW LINE
FLR	FLOOR
FPRF	FIREPROOFING
FR	FIRE RATED
FRMG	FRAMING
FRP	FIBERGLASS REINFORCED PLASTIC
FS	FLOOR SINK
FT	FEET
FTG	FOOTING
FVC	FIRE VALVE CABINET

G

G	GRILLE OR GAS
GA	GAUGE (GAGE)
GALV	GALVANIZED
GB	GRAB BAR OR GRADE BEAM
GCO	GRADE CLEANOUT
GI	GALVANIZED IRON OR GRATE INLET
GL	GLASS
GND	GROUND
GR	GRADE
GSU	GLAZED STRUCTURAL UNIT
GWB	GYPSUM WALLBOARD
GYP	GYPSUM

H

HB	HOSE BIBB
HC	HANDICAP
HDWE	HARDWARE
HDWD	HARDWOOD
HM	HOLLOW METAL
HND	HAND
HP	HORSE POWER
HORIZ	HORIZONTAL
HR	HOUR
HS	HIGH STRENGTH OR HEADED STUDS
HT	HEIGHT
HTR	HEATER
HVAC	HEATING/VENTILATING/ AIR CONDITIONING
HW	HOT WATER
HWTM	HOT WATER TEMPER-ATURE MAINTENANCE

I

ID	INSIDE DIAMETER
IF	INSIDE FACE
IN	INCH
INFO	INFORMATION
INSUL	INSULATION
INT	INTERIOR
INTER	INTERMEDIATE

J

J	JUNCTION
JAN	JANITOR
JB	JUNCTION BOX
JST	JOIST
JT	JOINT

K

KCJ	KEYED CONSTRUCTION JOINT
KIT	KITCHEN
KV	KILOVOLT
KVA	KILOVOLT-AMPERE
KW	KILOWATT
KWH	KILOWATT-HOUR

L

L	LENGTH
LAM	LAMINATE
LAV	LAVATORY
LF	LINEAR FEET
LH	LEFT HAND
LL	LIVE LOAD
LLH	LONG LEG HORIZONTAL
LLV	LONG LEG VERTICAL
LOC	LOCATE OR LOCATION
LONG	LONGITUDINAL
LP	LOW POINT
LT	LIGHT(S)
LTG	LIGHTING
LT WT	LIGHT WEIGHT
LVL	LEVEL

M

M	MOTOR
MAINT	MAINTENANCE
MANUF	MANUFACTURER
MAS	MASONRY
MAT'L	MATERIAL
MAX	MAXIMUM
M.B.M.	METAL BUILDING MANUFACTURER
MBR	MEMBER
MDP	MAIN DISTRIBUTION PANEL
MECH	MECHANICAL
MEP	MECHANICAL/ELECTRICAL/ PLUMBING
MFR	MANUFACTURER
MG	MIRROR GLASS
MH	MANHOLE
MIN	MINIMUM
MJA	SEALANT JOINT SHAPE DETAIL
MO	MASONRY OPENING
MPH	MILES PER HOUR
MTG	MOUNTING OR MOUNTED
MTL	METAL

N

N	NORTH
NFWH	NON-FREEZE WALL HYDRANT
NFYH	NON-FREEZE YARD HYDRANT
NIC	NOT IN CONTRACT
NO	NUMBER
NOM	NOMINAL
NTS	NOT TO SCALE

O

OA	OUTSIDE AIR
OC	ON CENTER
OCEW	ON CENTER -EACH WAY
OD	OUTSIDE DIAMETER
OF	OUTSIDE FACE
OFD	OVERFLOW DRAIN
OH	OVERHEAD
OPNG	OPENING
OPP	OPPOSITE
OSL	OUTSIDE LEG
OZ	OUNCES

P

PART	PARTITION
PL	PROPERTY LINE OR PLATE
PLAM	PLASTIC LAMINATE
PLAS	PLASTER
PLF	POUNDS PER LINEAR FOOT
PLYWD	PLYWOOD
PNL	PANEL
PR	PAIR
PROV	PROVIDE
PSF	POUNDS PER SQUARE FOOT
PSI	POUNDS PER SQUARE INCH
PSIG	POUNDS PER SQUARE INCH GAGE
PT	POINT
PTD	PAPER TOWEL DISPENSER OR PAINTED
PVC	POLYVINYL CHLORIDE
PVMT	PAVEMENT

Q

QT	QUARRY TILE
QTY	QUANTITY

R

R	RISER OR REGISTER
RA	RETURN AIR
RAD	RADIUS OR RETURN AIR DUCT
RCP	REFLECTED CEILING PLAN
RD	ROOF DRAIN
RE	REFER TO
REF	REFERENCE
REFL	REFLECTED
REINF	REINFORCING (REINFORCED)
REM	REMARK OR REMOVE
REQ'D	REQUIRED
RET	RETAINING
REV	REVERSE OR REVISED
RH	RIGHT HAND
RM	ROOM
RO	ROUGH OPENING
RPM	REVOLUTIONS PER MINUTE
RPZ	REDUCED PRESSURE PRINCIPAL BACKFLOW PREVENTER
RTU	ROOF TOP UNIT

S

S	SOUTH
SA	SUPPLY AIR
SAN	SANITARY
SAT	SUSPENDED ACOUSTICAL TILE
SC	SCALE
SCH	SCHEDULE
SCW	SOLID CORE WOOD
SD	SMOKE DAMPER OR STORM DRAIN
SECT	SECTION
SF	SUPPLY FAN OR SQUARE FEET
SGFT	STRUCTURAL GLAZED FACING TILE
SH	SPRINKLER HEAD
SHT	SHEET
SIM	SIMILAR
SJ	SAWED JOINT
SM	SPRINKLER MAIN
SMACNA	SHEET METAL AND AIR CONDITIONING CONTRACTORS NATIONAL ASSOCIATION
SPC	SPACE
SPEC	SPECIFICATION
SPEC'D	SPECIFIED
SQ	SQUARE
SS	SERVICE SINK OR SANITARY SEWER
SSM	SOLID SURFACE MATERIAL

S

SHT	SHEET
SIM	SIMILAR
SJ	SAWED JOINT
SM	SPRINKLER MAIN
SMACNA	SHEET METAL AND AIR CONDITIONING CONTRACTORS NATIONAL ASSOCIATION
SPC	SPACE
SPEC	SPECIFICATION
SPEC'D	SPECIFIED
SQ	SQUARE
SSMH	SANITARY SEWER MANHOLE
SSTL	STAINLESS STEEL
STA	STATION
STD	STANDARD
STIFF	STIFFENER
STIR	STIRRUP
STL	STEEL
STOR	STORAGE
STR	STRUCTURAL
SUPT	SUPPORT
SUSP	SUSPENDED
SV	SHEET VINYL
SVC	SERVICE
SW	SWITCH
SYM	SYMMETRICAL

T

T	THICKNESS OR TREAD
TAS	TEXAS ACCESSIBILITY STANDARDS
T&B	TOP AND BOTTOM
TC	TOP OF CURB
TEL	TELEPHONE
TEMP	TEMPERATURE OR TEMPORARY
TH	THRESHOLD
THRU	THROUGH
THR'D	THREADED
TLT	TOILET
TOC	TOP OF CONCRETE
TOS	TOP OF STEEL
TOT	TOTAL
TOW	TOP OF WALL
TP	TOILET PARTITION
TRANS	TRANSVERSE OR TRANSITION
TS	TUBE STEEL
T-STAT	THERMOSTAT
TTD	TOILET TISSUE DISPENSER
TYP	TYPICAL

U

U/G	UNDERGROUND
UL	UNDERWRITERS LABORATORY INC.
UNO	UNLESS OTHERWISE NOTED
UR	URINAL

V

V	VENT OR VOLT
VAC	VACUUM
VB	VINYL BASE
VCT	VINYL COMPOSITION TILE
VERT	VERTICAL
VEST	VESTIBULE
VF	VENTILATION FAN
VIF	VERIFY IN FIELD
VOL	VOLUME
VTR	VENT THROUGH ROOF
VWC	VINYL WALL COVERING
VWF	VINYL WALL FABRIC

W

W	WIDTH, WASTE OR WEST
W/	WITH
W/O	WITHOUT
WC	WATER CLOSET
WD	WOOD
WDW	WINDOW
WH	WATER HEATER OR WALL HYDRANT
WP	WEATHERPROOF OR WORKING POINT
WPFG	WATERPROOFING
WPL	WATERPROOF LOUVER
WS	WATER STOP
WSCT	WAINSCOT
WT	WEIGHT
WV	WATER VALVE
WWF	WELDED WIRE FABRIC
WWM	WELDED WIRE MESH

GENERAL SYMBOLS

- 24.0 NEW CONTOUR
- 20.1 EXIST. SPOT ELEV.
- 24.0 EXIST. CONTOUR
- LEVEL LINE
- D5 DEMOLITION NOTE SYMBOL
- C8 NEW CONSTRUCTION SYMBOL
- 1/AB.4 PARTITION TYPE KEY
- 1/AB.4 PARTITION TYPE KEY
- TA9 TOILET ACCESSORIES KEY NOTE
- X COLUMN GRID LOCATION
- RECEPTION 101 ROOM NAME / NUMBER
- WHEELCHAIR TURNING RADIUS
- 1/A1.1 PLAN / DETAIL ENLARGED
- 1/A1.0 WALL SECTION
- 2/A2.0 BUILDING SECTION
- 1/A1.1 SECTION DETAIL
- 1/A1.1 INTERIOR ELEV. KEY
- 115 DOOR TYPE
- B WINDOW TYPE
- 1 XXXXXXX SCALE: XXXXXXX DRAWING TITLE / SCALE
- 1/A1.0 EXTERIOR ELEVATION
- NORTH TRUE NORTH NORTH — NORTH ARROWS
- FE FIRE EXTINGUISHER

ARCHITECTURAL SYMBOLS

SECTION

- CONCRETE
- PRECAST CONCRETE
- CMU
- BRICK
- CAST/CUT STONE
- NATURAL STONE
- STEEL
- ALUMINUM
- BRASS/BRONZE
- FINISHED WOOD
- METAL LATH & PLASTER
- CERAMIC/QUARRY TILE
- GLASS/MIRROR
- GRADE/EARTH
- CARPET
- GRAVEL
- SAND
- CONTINOUS WOOD BLOCKING
- DISCONTINUOUS WOOD SHIM
- PLYWOOD
- SPRAYED FIREPROOFING
- BATT/BLANKET INSULATION
- RIGID INSULATION
- ROOF DECK INSULATION
- GYPSUM SHEATHING
- GYPSUM WALLBOARD
- BACKER ROD & SEALANT
- JOINT FILLER
- ACOUSTICAL CEILING
- PLASTIC LAMINATE
- EXTERIOR INSULATED FINISH SYSTEM (E.I.F.S.)

ELEVATION

- CONCRETE
- BRICK
- BRICK
- BRICK
- GLASS
- CONCRETE
- BRICK
- BRICK
- WOOD
- SAND
- SAND

Texas Department of Transportation
125 E. 11th Street
Austin, Texas 78701-2483
(512) 416-3048

Copyright © 2005 Texas Department of Transportation

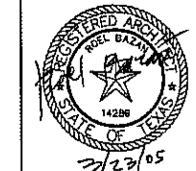

SOUTH TRAVIS AREA ENGINEER AND MAINTENANCE FACILITY
AUSTIN, TRAVIS COUNTY
AUSTIN DISTRICT 14

Revisions

Drawn by: --

Project No. 470400238

Date 03.23.2005

Sheet No. G1.1

of sheets

ABBREVIATIONS / SYMBOLS

NOTE: THIS DRAWING WAS CREATED FOR PRODUCTION ON 22" x 34" SHEET SIZE. DO NOT SCALE PRINTS.

CADFILE: T:\MNTFM\D14AUS\470400238\Acad\Arch\0238_G1_1.dwg Plotted: Tue, Mar. 22, 2005 @ 4:54 PM By: JTATE

GENERAL NOTES:

CIVIL GENERAL NOTES

The project includes grading, storm sewer, water line, gravity wastewater line, concrete driveways, sidewalks, curbs, asphalt pavement, concrete pavement and sanitary and storm sewer manholes. Specific items may have been identified as Future Work by TxDOT. These items are shown on the drawings for information purposes only.

The Texas Department of Transportation Standard Specifications, 2004 shall govern materials and methods used to perform this work. Water and wastewater improvements are to follow City of Austin Standard Specifications. All construction operations shall be accomplished in accordance with applicable State statutes and U.S. Occupational Safety Government printing office. Information and related reference materials may be obtained from O.S.H.A. AT 611 East 6th Street, Room 303, Austin, Texas.

Work to be performed within Interstate Highway 35 right-of-way shall be coordinated with Edward Villapando, TxDOT Roadway Maintenance Supervisor at 512\353-1061.

The Contractor must be licensed and must obtain a street cut permit from the City of Austin Department of Public Works and Transportation prior to the start of construction within the right-of-way of a public street or alley. within the City of Austin's jurisdiction.

The estimated quantities published with these construction documents are furnished as an aid in the bidding process and are not to be substituted for the Contractor's quantity take-offs.

Geotechnical information (i.e. soil borings) was prepared for use in establishing design controls for this project. Geotechnical information included in these documents is for informational purposes only, and is not to be construed as being an accurate representation of sub soil conditions. It shall be the Contractor's responsibility to determine the actual subsurface conditions.

The Bidder (Contractor after award) shall immediately notify the Engineer of any obstacles that may impede or prevent the proper construction of this project.

The Contractor shall arrange the operation in such a manner as to avoid unnecessary inconvenience to the public in construction areas.

Access to all side streets and driveways shall be maintained at all times at the sole expense of the Contractor unless otherwise directed by the Engineer.

Portions of the construction for this project authorized by permit or license agreement will be subject to such inspection and test as may be deemed necessary by the permit granting authorities. Contractor shall furnish information to authorities as required. Contractor shall also furnish incidental labor and equipment to allow testing personnel to access the work and cooperate fully with these authorities in conducting the testing and inspection program. Unless stated otherwise in the plans or project manual, costs of testing will be the responsibility of the Contractor.

The Construction Inspection Division of the Department of Public Works and Transportation shall arrange a pre-construction meeting not less than fourteen (14) days prior to beginning construction. Contractor shall notify Inspector forty-eight (48) hours in advance of beginning any construction in the R.O.W. or in easements. Contractor shall notify Inspector twenty-four (24) hours in advance of making any supplementary connection or closing off any water or wastewater services to property owners.

Contractor shall notify principles of each of the following entities of the construction schedule at least two weeks in advance of proposed construction operations. Contractor shall provide pertinent information about lane closures and detours and any other construction related activity which may interfere with normal services.

a) Austin Fire Department (512) 480-5283
b) Austin Police Department (512) 480-5283
c) Emergency Medical Services (EMS) (512) 480-5283
d) Austin Independent School District (512) 499-1715 (Jim Crook)
e) Capital Metro Transportation (512) 385-4295
f) U.S. Postal Service (512) 929-1252
g) Transportation Division (512) 499-7024

Contractor shall maintain the job site in a safe, neat, and workmanlike manner at all times. Job site safety shall not be compromised. Any unattractive nuisance shall be removed or camouflaged by Contractor when directed by the Owner or Engineer.

The attention of all prospective bidders is directed to Section 00140, paragraphs 2.08, 3.09, and 3.14 of the General Conditions of the Agreement, City of Austin Standard Specifications, the State Law (Vernon's annotated Texas statutes, Article 1436 (C)), and the need for effective precautionary measures when operating in the vicinity of electrical lines. If the Contractor chooses to use equipment with the potential of coming within the distances prescribed by statute, the Contractor is responsible for the coordination of the work with the appropriate Electric/utility Company.

The Contractor shall be responsible for all coordination between himself and other contractors and utilities in the vicinity of this project. This includes, but is not limited to, gas, water, wastewater, electrical, telephone, communications networks, cable television, petroleum pipelines, and street and drainage work. Once the Contractor becomes aware of a possible conflict, it is the Contractor's responsibility to notify the Project Inspector within twenty-four (24) hours.

Temporary blocking of inlets to prevent the entry of pollutants shall be used where traffic or construction operations preclude the use of filter dikes. Temporary blocking will not be paid for directly, but it will be considered subsidiary to other bid items.

The Contractors attention is called to the fact that all locations used for storing construction equipment, materials, and stockpiles of any type within the construction limits will be restricted to those locations where driver sight distance to businesses and side street intersections is not obstructed and all other locations where deemed as an unsightly appearance, as determined by the Engineer.

All construction equipment involved in roadway work shall be equipped with a permanently-mounted, Engineer-approved, 360-degree revolving or strobe warning light with amber lens in working order. This light shall have a minimum lens height of 5". This light shall have a mounting height of not less than 6 feet above the roadway surface and shall be visible from all sides. This equipment shall also have attached at each side of the rear end of the vehicle an approved orange warning flag mounted not less than 6 feet above the roadway surface.

All damage caused directly or indirectly to the street surface or subsurface outside the pavement cut area shall be regarded as a part of the street cut repair. This includes any scrapes, gouges, cuts, traffic signs and markings, and/or other damage caused by the Contractor's equipment. These areas will be included in the total area of repair. All repairs shall be at the Contractor's expense.

All existing sidewalks, curb and gutter, driveways, landscaping, or drainage facilities disturbed or damaged by the Contractor shall be removed and restored with materials equal to or better than the original and shall be at the Contractor's expense.

Blasting within the project area will not be allowed.

Contractor will minimize use of street parking by his/her employees in the vicinity of the construction area.

UTILITIES

Utilities shown reflect the best information available at the time that project was designed/surveyed. The Contractor shall contact the Austin area "One Call" system at (512) 472-2822, 48 hours prior to beginning any excavation for existing utility locations.

The information shown on these drawings indicating type and location of underground surface, and aerial utilities is not guaranteed to be exact or complete. The Contractor is responsible for determining the exact type, location, and depth of all utilities affected by construction for this project in order to avoid damaging those utilities. The Contractor shall immediately arrange for repair and restoration of Contractor-damaged utilities; and the Contractor shall pay for such repairs.

When an existing waterline main shut out is necessary or possible, the Contractor shall notify the construction inspector, who will then notify the water utility. The utility requires a minimum of seventy-two (72) hours advance notice for all shut outs.

Before disconnecting any wastewater line, Contractor must provide an alternate means of wastewater conveyance for the interrupted section at the Contractor's expense.

Contractor will be responsible for costs incurred as a result of utility relocation performed for Contractor's convenience.

Debris caps shall be placed as required after contractor has set up barricades. For new water line, debris caps shall be placed upon completion of water line.

CONSTRUCTION

Where removal of base and pavement is necessary for this project all base and pavement shall be replaced in accordance with the construction documents, City of Austin Standard specifications and Standard Specifications for cuts in public right-of-way. All pavement cuts shall be saw-cut prior to placement of HMAC.

Where Type - C HMAC is specified, lift thickness is 2".

Trucks delivering HMAC material to the site will be of sufficient number to ensure a continuous operation.

Laydown operations shall be performed in a sequence such that the longitudinal joint will be carried along without excess distance of lap back, not to exceed one day's operation, unless otherwise authorized by the Engineer.

All structural concrete shall be class "A" (5 sack, 3000 psi at 28 days), and all reinforcing steel shall be grade sixty, unless otherwise noted.

Contractor shall saw-cut or use Engineer approved alternative method to remove concrete pavements, to reconstruct cubs, to delineate milling edges, and to tie to existing pavement. Where cutting into base materials, saw-cut or approved alternative method shall be of sufficient depth to achieve a smooth, vertical face during excavation in the base. This item will not be paid for directly, but it will be considered subsidiary to other bid items.

All reconstruction, preparation work, and paving shall be completed in a manner so as to provide a smooth riding surface free of bumps, dips, and ripples and a smooth, uniform appearance.

If any pressure-carrying water utility line is less than two (2) feet under the proposed subgrade line of the new roadway and will not be lowered, no material shall be stockpiled over this line and no proof rolling will take place directly over the line. Contractor shall confirm with the "One Call" the exact location of the line and exercise caution when working in the vicinity of this line.

ENVIRONMENTAL

The placement of erosion/sedimentation controls shall be in accordance with the plans.

A pre-construction conference shall be held subsequent to installation of the initial phase of the erosion and sedimentation controls and prior to beginning construction. This conference should take place on the site to demonstrate compliance with the Storm Water Pollution Prevention Plan (SWPPP).

Any significant variation in materials or locations of controls of fences from that shown on the approved plans must be approved by the Project Manager and/or Environmental Specialist, as appropriate.

Off-site Disposal

The Contractor shall be responsible for disposing of all spoils material from the construction site. All spoils material shall be disposed of by the Contractor at an approved spoil site. The Contractor shall be responsible for locating and securing a permit for the site and shall notify the inspector at least forty-eight (48) hours prior to disposal of the materials. This item will not be paid for directly, but it will be considered subsidiary to other bid items.

Staging Area for Construction

All construction activities, including material storage and staging area, shall be within the construction limits indicated on the drawings. Use of the area within the construction limits for these purpose will be restricted to those locations where driver sight distance to businesses and side street intersections is not obstructed and at the other locations where an unsightly appearance, as determined by the engineer will not exist.

The following criteria will be used for storing materials within the construction limits:

Materials shall not be stored greater than three feet in height
Material must be used within three days.
Material must be in barricaded area.
If stored materials are located between curbs, they must be protected by guardrail.
If stored materials are located on sidewalks, they must be protected by Type III barricades.
If spoils materials are being stored, they must be protected by silt fence.
Materials must be maintained in a neat organized manner.

The following criteria will be used for storing equipment within the construction limits:

Equipment must be as far away from travel ways as practical.
Contractor shall minimize total area for equipment storage
Equipment storage areas shall be enclosed by the Contractor at no expense to the Owner.

Any additional areas required for construction materials and/or equipment at this project shall be the responsibility of the contractor and must be approved by the Drainage Utility Department. Permits and associated costs shall be the responsibility of the contractor.

The Owner does not take any responsibility or liability of equipment or materials stored on site.

SIDEWALKS

Expansion joints shall be provided at the tie-in of new curb and gutter to existing curb and gutter and at other locations to be determined by the engineer.

Expansion joint materials shall be as per City of Austin Item 408 the full depths of the concrete for wet joints and 1/2" bitumen filled fiber for cold joints or as directed by the engineer.

All fill areas shall be compacted to a uniform density of not less than 95 percent of the maximum dry density at not less than optimum moisture as determined by the test method TEX-113-E.

All flat concrete shall be broom finished.

SEEDING

Seeding for erosion control shall be applied at the specified rate over areas disturbed by construction activities as designated by the engineer. From September 14 to March 1, seeding shall be with a combination of 2 lbs. Per 1000 S.F. of unhulled Bermuda and 11 lbs. Per S.F. of Winter Rye with a purity of 955 with 90% germination. From March 2 to September 14, seeding shall be with hulled Bermuda grass (Cynoden Dactylon) at a rate of 2 lbs. Per 1000 S.F. with a purity of 95% with 90% germination. Fertilizer shall have an analysis of 16-20-0 and shall be applied at the rate of 400 lbs. Per acre. Seeding shall be watered until a uniform one-inch growth is established; at which time the payment will be made.

STANDARD TREE PROTECTION NOTES

The placement of tree protection controls shall be installed in accordance with the plans prior to construction.

All grading within protected root zone areas shall be done by hand or with small equipment to minimize root damage Prior to grading, relocate protective fencing to 2 feet behind the grade change area.

Any roots exposed by construction activity shall be pruned flush with the soil. Backfill root areas with good quality top soil as soon as possible. If exposed root areas are not back filled within 2 days, cover them with organic material in a manner which reduces soil temperature and minimizes water loss due to evaporation.

Prior to excavation or grade cutting within tree driplines, make a clean cut between the disturbed and undisturbed root zones with a rock saw or similar equipment to minimize damage to remaining roots.

Trees most heavily impacted by construction activities should be watered deeply once a week during periods of hot, dry weather. The crowns should be sprayed with feeder periodically to reduce dust accumulation on the leaves.

When installing concrete adjacent to the root zone of a tree use a plastic vapor barrier behind the concrete to prohibit leaching of lime into the root zone.

Any trenching required for the installation of landscape irrigation shall be placed as far from existing tree trunks as possible.

No landscape topsoil dressing greater than 4 inches shall be permitted within the dripline of trees. No soil is permitted on the root flare of any tree.

Pruning to provide clearance for structure, vehicular traffic and construction equipment shall take place before construction begins (before damage occurs). All finished pruning must be done according to recognized, approved standards of industry, reference the national arborist association pruning standards for shad trees class IV on pruning (available on request from the City Arborist).

All wounds which occur to tree trunks and limbs must be repaired within 24 hours of occurrence by bark Tracing to remove damaged wood and bark and thoroughly sealed with an acceptable tree wound dressing. This specifically applies to wounds created by construction vehicles and equipment, installation of towers and piers, and stringing of electrical lines.

Trees approved for removal shall be removed in a manner which does not impact trees to be preserved.

CITY OF AUSTIN WATER AND WASTEWATER UTILITY SPECIAL CONSTRUCTION NOTES 12/20/89

1. THE CITY STANDARD CONSTRUCTION SPECIFICATIONS CURRENT AT THE TIME OF BIDDING SHALL GOVERN MATERIAL AND METHODS USED TO DO THIS WORK.

2. CONTRACTOR MUST OBTAIN A STREET CUT PERMIT FROM TRANSPORTATION AND PUBLIC SERVICES DEPARTMENT BEFORE BEGINNING CONSTRUCTION WITHIN THE RIGHT-OF-WAY OF A PUBLIC STREET OR ALLEY.

3. AT LEAST 48 HOURS BEFORE BEGINNING ANY WATER AND WASTEWATER CONSTRUCTION IN PUBLIC R.O.W. OR PUBLIC EASEMENT, THE CONTRACTOR SHALL NOTIFY TRANSPORTATION AND PUBLIC SERVICES INSPECTION DIVISION FOR MAIN LINE CONSTRUCTION, OR WATER AND WASTEWATER UTILITY TAPS INSPECTION FOR TAPS ONLY CONSTRUCTION.

4. THE CONTRACTOR SHALL CONTACT THE AUSTIN AREA "ONE CALL" SYSTEM AT 472-2822 FOR EXISTING UTILITY LOCATIONS PRIOR TO ANY EXCAVATION. IN ADVANCE OF CONSTRUCTION, THE CONTRACTOR SHALL VERIFY THE LOCATIONS OF ALL UTILITIES TO BE EXTENDED, TIED TO, OR ALTERED, OR SUBJECT TO DAMAGE/INCONVENIENCE BY THE CONSTRUCTION OPERATIONS. THE CITY OF AUSTIN WATER AND WASTEWATER MAINTENANCE RESPONSIBILITY ENDS AT R.O.W./EASEMENT LINES.

5. NO OTHER UTILITY SERVICE/APPURTENANCES SHALL BE PLACED NEAR THE PROPERTY LINE, OR OTHER ASSIGNED LOCATION DESIGNATED FOR WATER AND WASTEWATER UTILITY SERVICE THAT WOULD INTERFERE WITH THE WATER AND WASTEWATER SERVICES.

6. THE CITY SPECIFICATION ITEM 509 WILL BE REQUIRED AS A MINIMUM TRENCH SAFETY MEASURE. CONTRACT DOCUMENTS WHICH INCLUDE A TRENCH SAFETY PLAN AND A PAY ITEM FOR TRENCH SAFETY MEASURES, IN COMPLIANCE WITH TEXAS HOUSE BILL 1569, MUST BE RECEIVED BY TRANSPORTATION AND PUBLIC SERVICES CONTRACT ADMINISTRATION OFFICE BEFORE BEGINNING WORK ON THE PROJECT.

7. ALL MATERIALS TEST, INCLUDING SOIL DENSITY TESTS AND RELATED SOIL ANALYSIS, SHALL BE ACCOMPLISHED BY AN INDEPENDENT LABORATORY FUNDED BY THE DEVELOPER IN ACCORDANCE WITH CITY STANDARD SPECIFICATION ITEM 1804.04.

8. PRESSURE TAPS SHALL BE IN ACCORDANCE WITH CITY STANDARD SPECIFICATION ITEM 510.3(24). THE CONTRACTOR SHALL DO ALL EXCAVATION ETC., AND SHALL FURNISH, INSTALL AND AIR TEST THE SLEEVE AND VALVE. IF A PRIVATE CONTRACTOR MARKS THE TAP A CITY INSPECTOR MUST BE PRESENT. WITH 2 WORKING DAYS (MIN.) NOTICE, CITY CREWS CAN MAKE TAPS UP TO 12 INCHES AT THE CONTRACTOR'S EXPENSE; FISCAL ARRANGEMENTS MUST BE MADE IN ADVANCE AT THE TAPS OFFICE, 625 EAST 10th STREET. "SIZE ON SIZE" TAPS WILL NOT BE PERMITTED, UNLESS MADE BY USE OF AN APPROVED FULL CIRCLE-GASKETED TAPPING SLEEVE. CONCRETE BLOCKING SHALL BE PLACED BEHIND AND UNDER ALL TAP SLEEVES 24 HOURS PRIOR TO MAKING THE WET TAP.

9. THRUST RESTRAINT SHALL BE IN ACCORDANCE WITH CITY STANDARD SPECIFICATION ITEM 510.3(22).

10. FIRE HYDRANTS SHALL BE SET IN ACCORDANCE WITH CITY STANDARD SPECIFICATION ITEM 511.4(2). FIRE HYDRANTS IN PARK LAND SHALL BE PAINTED GRAY.

11. WATER LINE TESTING AND STERILIZATION SHALL BE PERFORMED IN ACCORDANCE WITH CITY STANDARD SPECIFICATION ITEMS 510.3(27) - (29).

Texas Department of Transportation
125 E. 11th Street
Austin, Texas 78701-2483
(512) 416-3948
Copyright©2004 Texas Department of Transportation

STATE OF TEXAS
DAVID H. MAY
46772
REGISTERED PROFESSIONAL ENGINEER
7/23/05

SOUTH TRAVIS AREA ENGINEER AND MAINTENANCE FACILITY
AUSTIN, TRAVIS COUNTY
AUSTIN DISTRICT 14

Revisions

Drawn by: JOT
Project No. 470400238
Date 12.06.2004
Sheet No.
C1.1
of sheets

GENERAL NOTES

CADFILE: T:\MNTFMID14\US\470400238\Acad\Civil\00238_C1_1.dwg Plotted: Thu Mar. 17, 2005 @ 9:49 AM By: DHAM

NOTE: THIS DRAWING WAS CREATED FOR PRODUCTION ON 22" x 34" SHEET SIZE. DO NOT SCALE PRINTS.

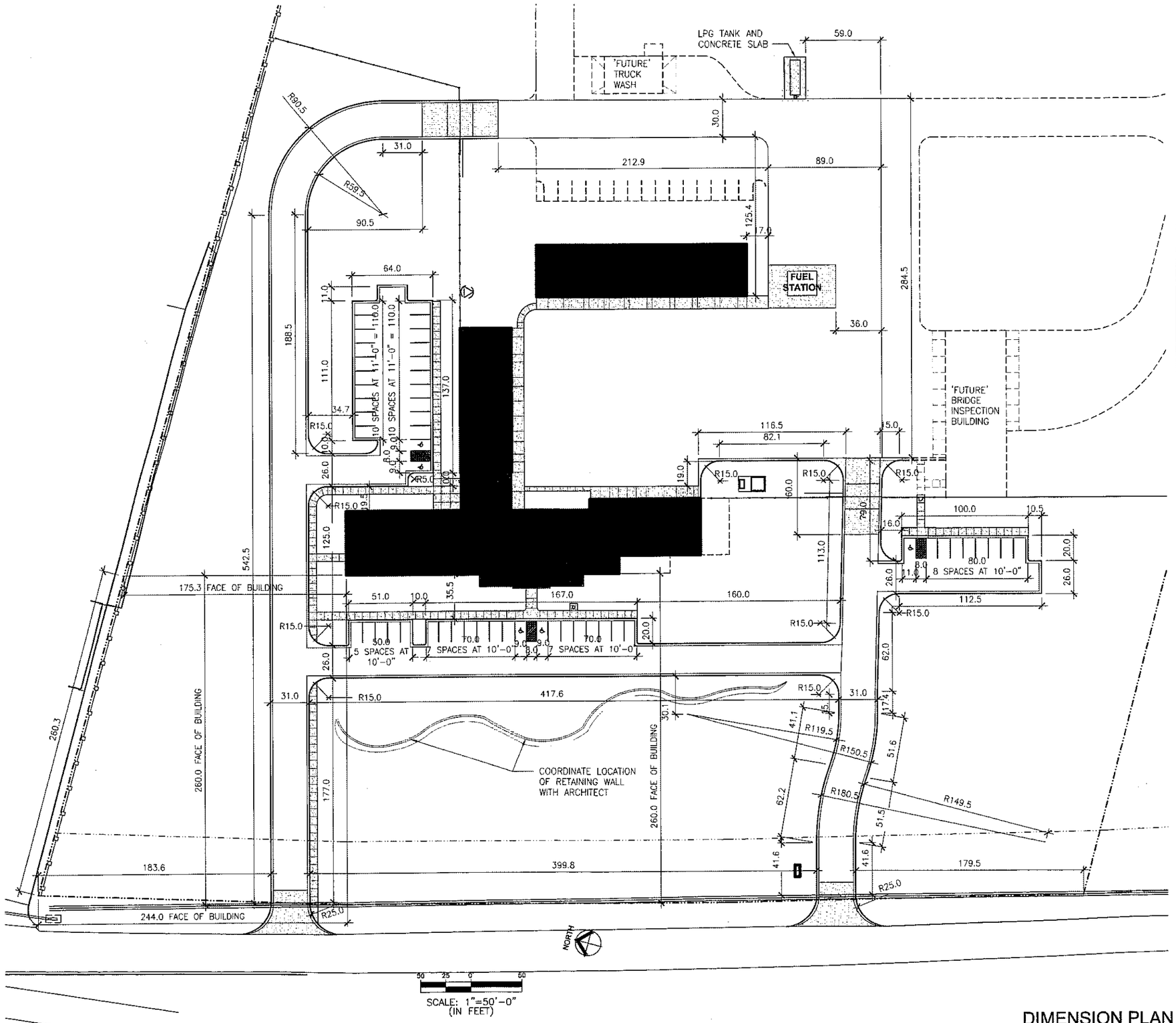

DIMENSION PLAN

NOTE: THIS DRAWING WAS CREATED FOR PRODUCTION ON 22" x 34" SHEET SIZE. DO NOT SCALE PRINTS.

Texas Department of Transportation
125 E. 11th Street
Austin, Texas 78701-2483
(512) 416-3048

Copyright © 2005 Texas Department of Transportation

STATE OF TEXAS
DAVID W. HAM
65772
REGISTERED PROFESSIONAL ENGINEER
3/24/05

SOUTH TRAVIS AREA ENGINEER AND MAINTENANCE FACILITY

AUSTIN, TRAVIS COUNTY
AUSTIN DISTRICT 14

Revisions

Drawn by: JOT
Project No. 470400238
Date 03.23.2005
Sheet No.

C1.2
of sheets

CADFILE: T:\BNTF\MD14\US\470400238\Acad\Civil\0238_C1.2.dwg Plotted: Thu, Mar 24, 2005 @ 8:24 AM By: JTATE

KEY NOTES:

SF - Silt Fence
RB - Rock Berm
SCE - Stablized Consrtuction Entrance
--X-- - Tree Protection Fencing

N

50 25 0' 50
SCALE: 1"=50'-0"
(IN FEET)

Erosion & Sedimentation Control

NOTE: THIS DRAWING WAS CREATED FOR PRODUCTION ON 22" x 34" SHEET SIZE. DO NOT SCALE PRINTS.

CADFILE: T:\MNTFM\D14\AUS\470400238\vcad\Civil\0238_C1_2.dwg Plotted: Thu, Mar. 17, 2005 @ 12:41 PM By: DHAM

Texas Department of Transportation
125 E. 11th Street
Austin, Texas 78701-2483
(512) 416-3048

Copyright © 2005 Texas Department of Transportation

STATE OF TEXAS
DAVID "M." HAM
46772
REGISTERED PROFESSIONAL ENGINEER
3/22/05

SOUTH TRAVIS AREA ENGINEER AND MAINTENANCE FACILITY
AUSTIN, TRAVIS COUNTY
AUSTIN DISTRICT 14

Revisions

Drawn by: JOT
Project No. 470400238
Date 03.23.2005
Sheet No.
C2.1
of sheets

SCALE: 1"=50'-0"
(IN FEET)

Site Grading & Storm Sewer

NOTE: THIS DRAWING WAS CREATED FOR PRODUCTION ON 22" x 34" SHEET SIZE. DO NOT SCALE PRINTS.

CADFILE: T:\MNTRMD14\US470400238\cad\Civil\0238_C1_2.dwg Plotted: Thu, Mar. 17, 2005 @ 1:34 PM By: DHAM

Texas Department of Transportation
125 E. 11th Street
Austin, Texas 78701-2483
(512) 416-3948

Copyright © 2005 Texas Department of Transportation

STATE OF TEXAS
DAVID H. HAM
46772
REGISTERED PROFESSIONAL ENGINEER
3/22/05

SOUTH TRAVIS AREA ENGINEER AND MAINTENANCE FACILITY

AUSTIN, TRAVIS COUNTY
AUSTIN DISTRICT 14

Revisions
1
2
3
4

Drawn by:
JOT
Project No.
470400238
Date
03.23.2005
Sheet No.

C3.1
of sheets

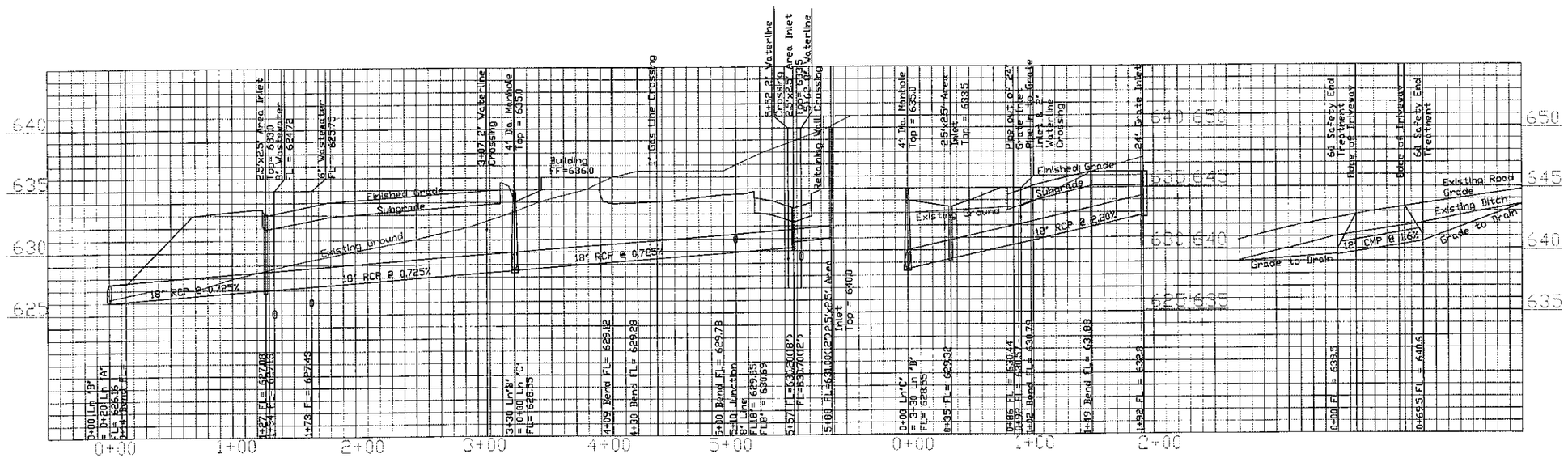

STORM SEWER LINE "B"

STORM SEWER LINE "C"

SOUTH ENTRANCE DRIVEWAY CULVERT

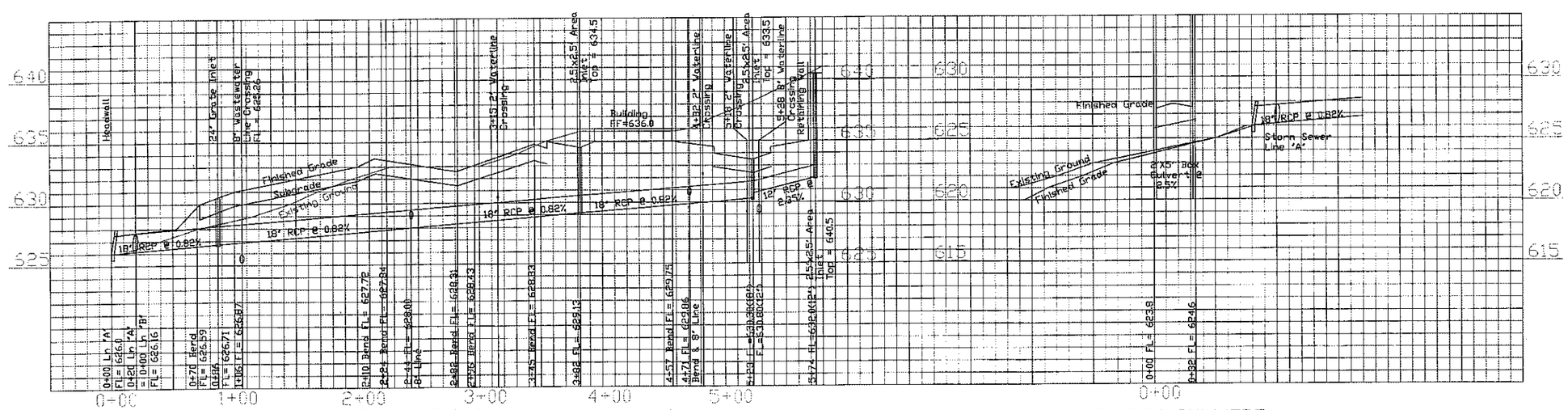

STORM SEWER LINE "A"

2'x5' BOX CULVERT

STORM SEWER PROFILES

NOTE: THIS DRAWING WAS CREATED FOR PRODUCTION ON SHEET SIZE. DO NOT SCALE PRINTS.

Texas Department of Transportation
125 E. 11th Street
Austin, Texas 78701-2483
(512) 416-3048

Copyright © 2003 Texas Department of Transportation

STATE OF TEXAS
DAVID H. HAM
46777
REGISTERED PROFESSIONAL ENGINEER
3/22/05

SOUTH TRAVIS AREA ENGINEER AND MAINTENANCE FACILITY

AUSTIN, TRAVIS COUNTY
AUSTIN DISTRICT 14

Revisions

Drawn by:

Project No.
470400238
Date
03.23.2005
Sheet No.
C3.2
of sheets

CADFILE: T:\MNTFA\D14\AUS\470400238\Acad\Civil\0238_C4_0.dwg Plotted: Wed, Mar. 23, 2005 @ 8:26 AM By: DHAM

MATCH SHEET C4.2

FUTURE BUILDING
FF =

8" SDR 35 PVC
SANITARY SEWER AT
0.50%

4" SDR 35 PVC
SANITARY SEWER
STUB OUT AT 630.0

14 + 58.2 LINE "A-1"
MANHOLE AND WATER TIGHT LID
RIM = 634.5
FL(IN)= 622.69
FL(OUT)= 622.59

8" SDR 35 PVC
SANITARY SEWER AT
1.73%

12 + 65.2 LINE "A-1"
MANHOLE AND WATER TIGHT LID
RIM= 623.25
FL(IN)= 619.25
FL(OUT)= 619.15

8" SDR 35 PVC
SANITARY SEWER AT
0.50%

9 + 94.6 LINE "A-1"
MANHOLE AND WATER TIGHT LID
RIM = 622.5
FL(IN)= 617.8
FL(OUT)= 617.7

8" SDR 35 PVC
SANITARY SEWER AT
0.50%

BEGIN CONSTRUCTION AT MANHOLE
DESIGNED BY BURY + PARTNERS AND
CONSTRUCTED FOR LINCOLN-MERCURY
TRACT

6 + 57.1 LINE "A-1" (BY OTHERS)
MANHOLE AND WATER TIGHT LID
RIM = 621.5
FL(IN) = 616.0
FL(OUT) = 615.9
6" FL (IN) = 616.17

MANHOLE (BY OTHERS)

25" LIVE OAK
40" LIVE OAK
28" LIVE OAK
28" LIVE OAK
28" LIVE OAK
28" LIVE OAK

LINCOLN-MERCURY TRACT

BRANDT ROAD

50' EASEMENT

650'
422'
25.0
30.0

3308
3309
3307

FL= 617.13'
FL= 617.32'
12" RCP

N

50 25 0' 50
SCALE: 1"=50'-0"
(IN FEET)

WATER & WASTEWATER PLAN

NOTE: THIS DRAWING WAS CREATED FOR PRODUCTION ON 22" x 34" SHEET SIZE. DO NOT SCALE PRINTS.

CADFILE: T:\MNTF\M\D14\AUS\470400236\Acad\Civil\0238_C1_2.dwg Plotted: Thu, Mar. 17, 2005 @ 10:21 AM By: DHAM

Texas Department of Transportation
125 E. 11th Street
Austin, Texas 78701-2483
(512) 416-3048

Copyright © 2005 Texas Department of Transportation

STATE OF TEXAS
DAVID H. HAM
46772
REGISTERED PROFESSIONAL ENGINEER
3/22/05

SOUTH TRAVIS AREA ENGINEER
AND MAINTENANCE FACILITY
AUSTIN, TRAVIS COUNTY
AUSTIN DISTRICT 14

Revisions

Drawn by:
JOT
Project No.
470400238
Date
03.23.2005
Sheet No.
C4.1
of sheets

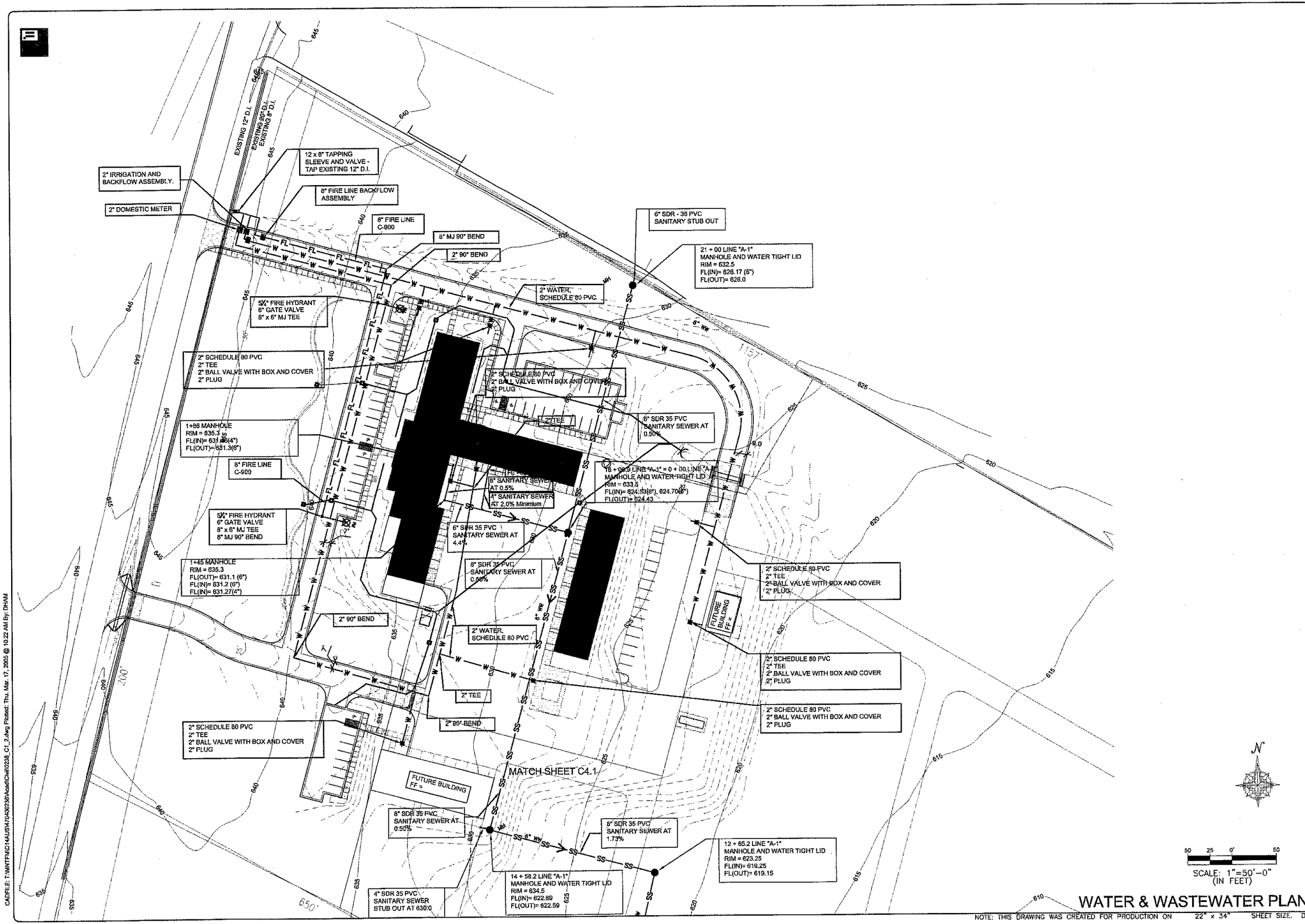

WATER & WASTEWATER PLAN

NOTE: THIS DRAWING WAS CREATED FOR PRODUCTION ON 22" x 34" SHEET SIZE. DO NOT SCALE PRINTS.

CADFILE: T:\MNTFMID14AUSW70400238\Acad\Civil\0238_C1_2.dwg Plotted: Thu, Mar. 17, 2005 @ 10:22 AM By: DHAM

Texas Department of Transportation
125 E. 11th Street
Austin, Texas 78701-2483
(512) 416-3848

Copyright © 2005 Texas Department of Transportation

STATE OF TEXAS
DAVID H. HAM
45772
REGISTERED PROFESSIONAL ENGINEER
2/22/05

SOUTH TRAVIS AREA ENGINEER AND MAINTENANCE FACILITY

AUSTIN, TRAVIS COUNTY
AUSTIN DISTRICT 14

Revisions

Drawn by: JOT
Project No. 470400238
Date 03.23.2005
Sheet No.
C4.2
of sheets

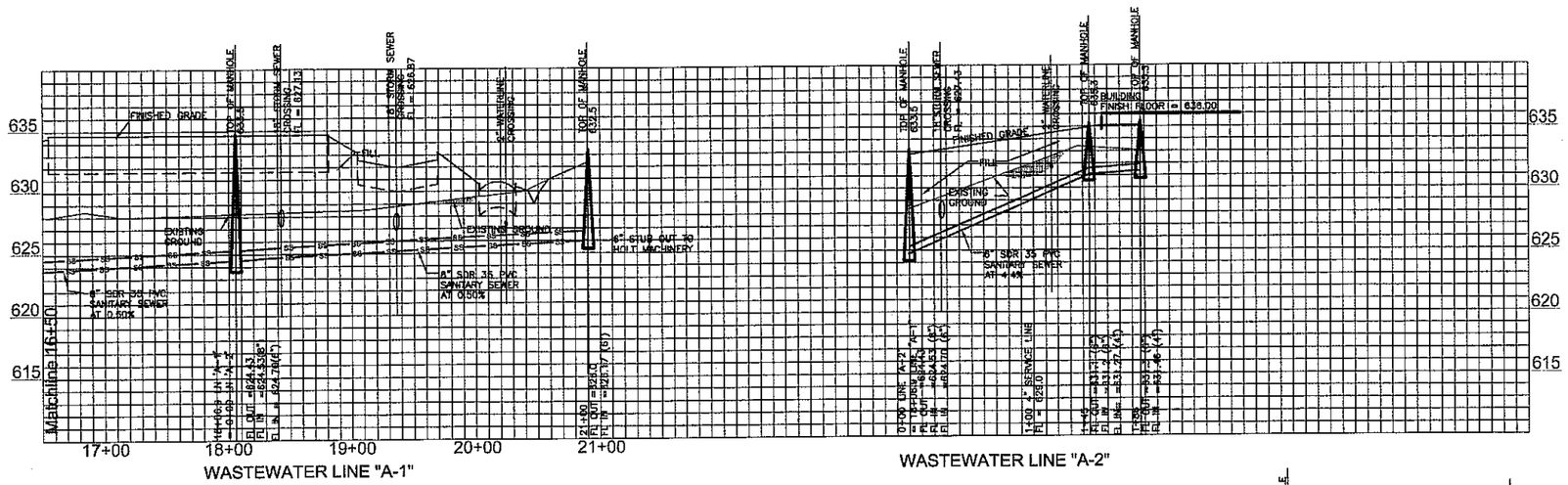

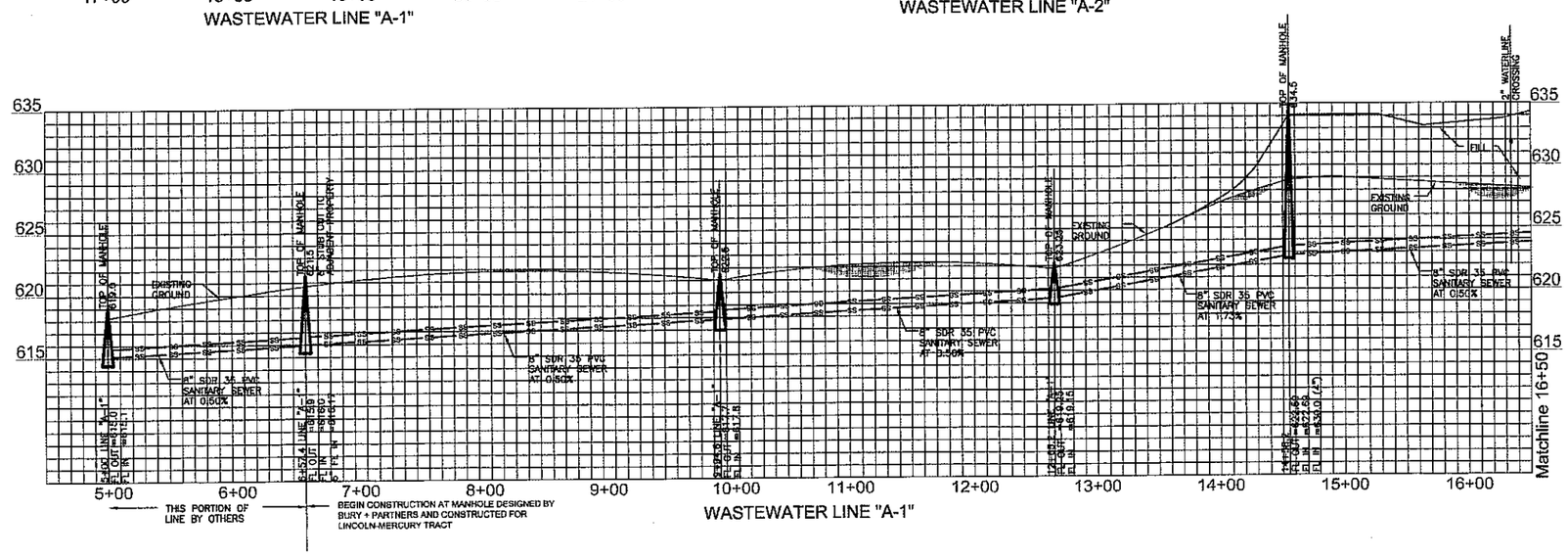

WASTEWATER PROFILES

NOTE: THIS DRAWING WAS CREATED FOR PRODUCTION ON 22" x 34" SHEET SIZE. DO NOT SCALE PRINTS.

Texas Department of Transportation
125 E. 11th Street
Austin, Texas 78701-2483
(512) 416-3048

Copyright©2004 Texas Department of Transportation

STATE OF TEXAS
DAVID H. HAM
46772
REGISTERED PROFESSIONAL ENGINEER
3/22/05

SOUTH TRAVIS AREA ENGINEER AND MAINTENANCE FACILITY
AUSTIN, TRAVIS COUNTY
AUSTIN DISTRICT 14

Revisions

Drawn by: JOT/DHH
Project No. 470400238
Date 12.06.2004
Sheet No.
C4.3
of X sheets

CADFILE: T:\MNTFM\DH4AUSN7040023B\acad\Civil\0238_C3.dwg Plotted: Thu, Mar. 17, 2005 @ 9:03 AM By: DHAM

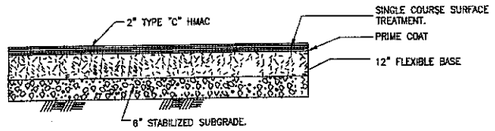

SUBGRADE TREATMENT: 3% LIME
FLEXIBLE BASE: TYPE A, GRADE 1
PRIME COAT: TYPE MC30, APPLICATION RATE 0.2 GAL/SY
SURFACE TREATMENT:
AGGREGATE: TYPE B, GRADE 4, APPLICATION RATE 0.01 CY/SY
ASPHALT: TYPE AC-20STR, APPLICATION RATE 0.4 GAL/SY
PAVEMENT SURFACE: 2" HMAC TYPE C.

14 FLEXIBLE BASE PAVEMENT SECTION
SCALE: N. T. S.

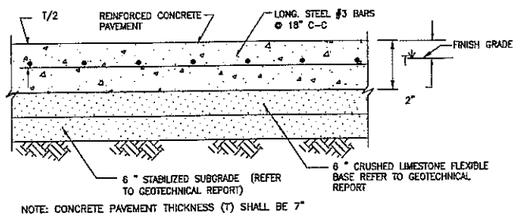

NOTE: CONCRETE PAVEMENT THICKNESS (T) SHALL BE 7"

13 REINFORCED PAVEMENT SECTION
SCALE: N. T. S.

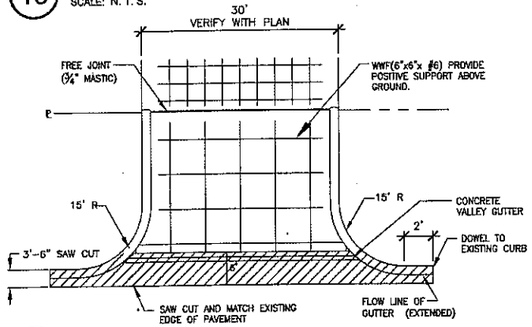

12 PLAN VIEW DRIVEWAY DETAIL
SCALE: N. T. S.

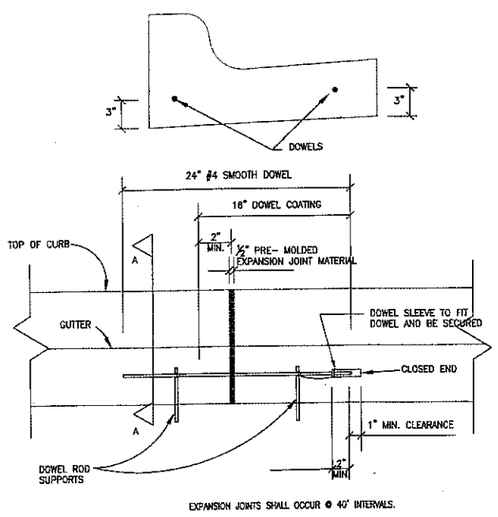

11 CURB EXPANSION JOINT DOWEL DETAIL
SCALE: 1 1/2" = 1'-0"

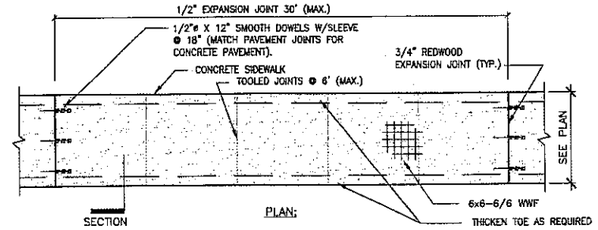

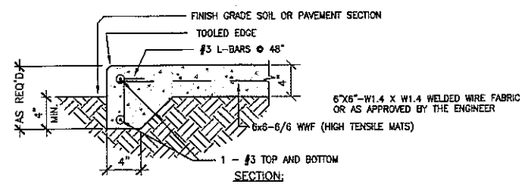

10 STANDARD SIDEWALK DETAIL
SCALE: N. T. S.

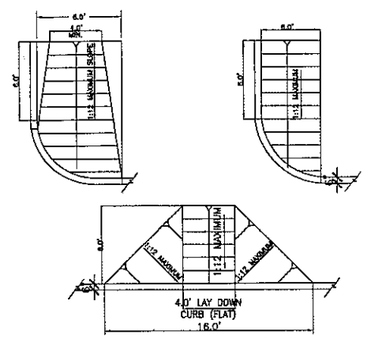

NOTE: ALL RAMP SURFACES SHALL BE BROOM FINISHED. TRAVERSE TRACTION GROOVES 1/4" X 1/4" SHALL BE INSTALLED ON 12" CENTERS ALONG TRAVEL PATH.

9 PEDESTRIAN RAMP
SCALE: N. T. S.

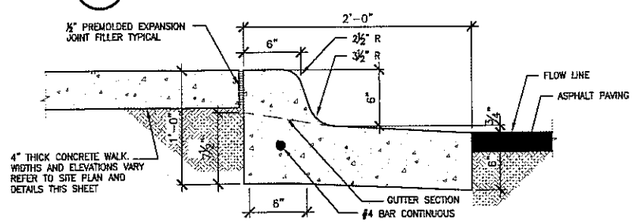

8 CURB AND GUTTER SECTION
SCALE: 1 1/2" = 1'-0"

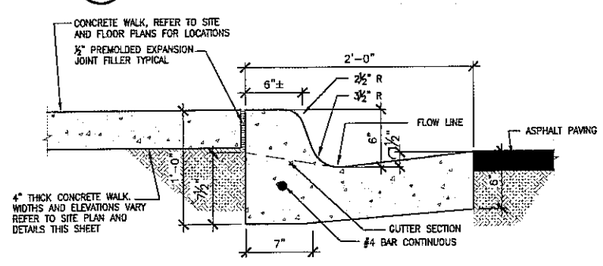

7 CURB AND GUTTER SECTION
SCALE: 1 1/2" = 1'-0"

PLAN

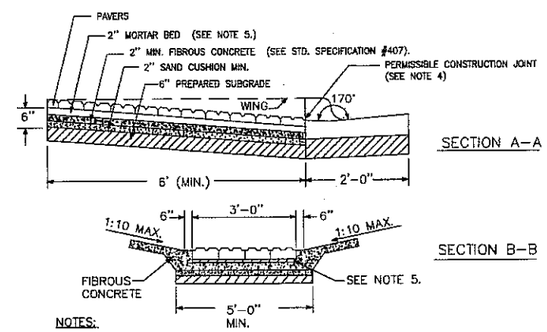

NOTES:

1. PAVERS WILL HAVE DETECTABLE WARNING THAT CONSIST OF RAISED TRUNCATED DOMES WITH A DIAMETER OF 0.9 IN. (23MM), A HEIGHT OF NOMINAL 0.2 IN. (5MM) AND A CENTER-TO-CENTER SPACING OF NOMINAL 2.35 IN. (60MM) AND SHALL CONTRAST VISUALLY WITH ADJOINING SURFACES, EITHER LIGHT-ON-DARK OR DARK-ON-LIGHT (RE: ADA SECTION 4.29.2). MATERIAL USED TO PROVIDE CONTRAST SHALL BE AN INTEGRAL PART OF THE WALKING SURFACE. PAVER PATTERN VARIES PER MANUFACTURER'S RECOMMENDATION.
2. AREA OF RAMP TO INCLUDE CONTRASTING COLOR DOES NOT HAVE TO INCLUDE THE WINGS.
3. THE PERMISSIBLE CONSTRUCTION JOINT BETWEEN THE BRICK PAVERS AND THE LAY DOWN CURB SHALL BE LIMITED TO 1/4" JOINT SIZE. GAPS LARGER THAN 1/4" MUST BE APPROVED BY THE PROJECT MANAGER/INSPECTOR. GAPS GREATER THAN 1/4" SHALL BE SOLID MORTAR FILLED BETWEEN THE BRICK PAVERS AND CURB UNLESS OTHERWISE INSTRUCTED BY THE PROJECT MANAGER/INSPECTOR.

6 SIDEWALK CURB RAMP
SCALE: N. T. S.

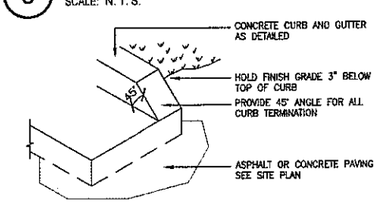

5 DETAIL - END OF CURB
SCALE: 1 1/2" = 1'-0"

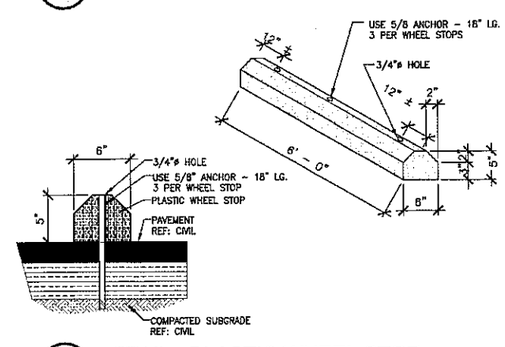

4 DETAIL - PLASTIC WHEEL STOP
SCALE: 1 1/2" = 1'-0"

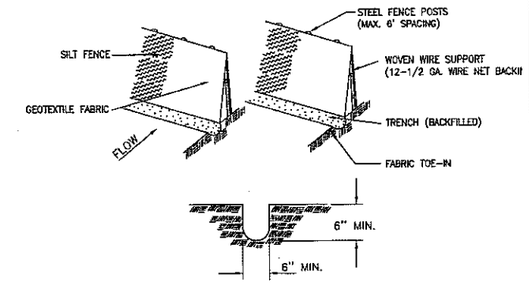

GENERAL NOTES:

1. STEEL POSTS WHICH SUPPORT THE SILT FENCE SHALL BE INSTALLED ON A SLIGHT ANGLE TOWARD THE ANTICIPATED RUNOFF SOURCE. POST MUST BE EMBEDDED A MINIMUM OF ONE FOOT.
2. THE TOE OF THE SILT FENCE SHALL BE TRENCHED IN WITH A SPADE OR MECHANICAL TRENCHER, SO THAT THE DOWN SLOPE FACE OF THE TRENCH IS FLAT AND PERPENDICULAR TO THE LINE OF FLOW. WHERE FENCE CAN NOT BE TREATED IN (e.g. pavement) WEIGHT FABRIC FLAP WITH WASHED GRAVEL ON UPHILL SIDE TO PREVENT FLOW UNDER FENCE.
3. THE TRENCH MUST BE A MINIMUM OF 6 INCHES DEEP AND 6 INCHES WIDE TO ALLOW FOR THE SILT FENCE FABRIC TO BE LAID IN THE GROUND AND BACKFILLED WITH COMPACTED MATERIAL.
4. SILT FENCE SHOULD BE SECURELY FASTENED TO EACH STEEL SUPPORT POSTS OR TO WOVEN WIRE, WHICH IS IN TURN ATTACHED TO THE STEEL FENCE POST.
5. INSPECTION SHALL BE MADE WEEKLY OR AFTER EACH RAINFALL EVENT AND REPAIR OR REPLACEMENT SHALL BE MADE PROMPTLY AS NEEDED.
6. SILT FENCE SHALL BE REMOVED WHEN THE SITE IS COMPLETELY STABILIZED SO AS NOT TO BLOCK OR IMPEDE STORM FLOW OR DRAINAGE.
7. ACCUMULATED SILT SHALL BE REMOVED WHEN IT REACHES A DEPTH OF 6 INCHES. THE SILT SHALL BE DISPOSED OF IN AN APPROVED SITE AND IN SUCH A MANNER AS TO NOT CONTRIBUTE TO ADDITIONAL SILTATION.

3 SILT FENCE
SCALE: N. T. S.

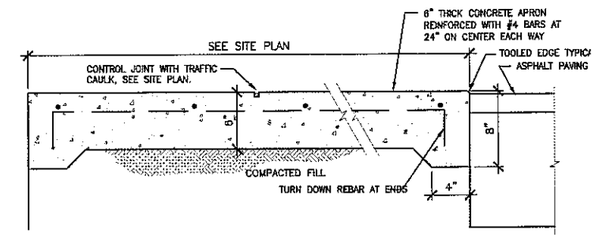

2 DETAIL - CONCRETE APRON
SCALE: 1 1/2" = 1'-0"

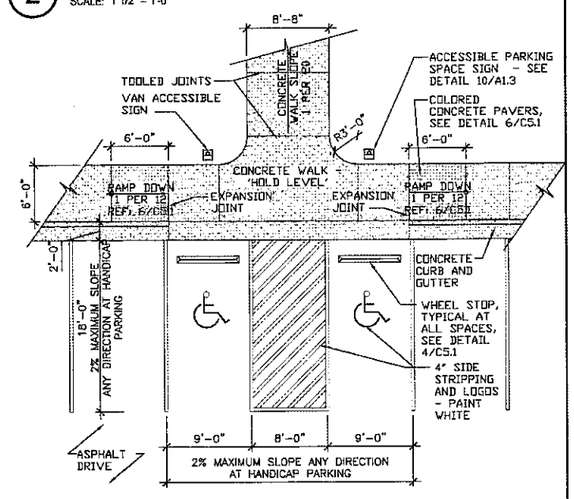

1 PLAN DETAIL AT PARKING
SCALE: 1/8" = 1'-0"

CIVIL DETAILS

Texas Department of Transportation
125 E. 11th Street
Austin, Texas 78701-2483
(512) 416-3048
Copyright © 2005 Texas Department of Transportation

STATE OF TEXAS
DAVID H. YAM
46772
REGISTERED PROFESSIONAL ENGINEER
3/23/05

SOUTH TRAVIS AREA ENGINEER AND MAINTENANCE FACILITY
AUSTIN, TRAVIS COUNTY
AUSTIN DISTRICT 14

Revisions

Drawn by: JOT / DH
Project No. 470400238
Date 03.23.2005
Sheet No.
C5.1
of X sheets

NOTE: THIS DRAWING WAS CREATED FOR PRODUCTION ON 22" x 34" SHEET SIZE. DO NOT SCALE PRINTS.

CADFILE: T:\MNTFM\D14\AUS\470400238\AssetCivil\DETAILS.dwg Plotted: Wed, Mar. 23, 2005 @ 11:56 AM By: JTATE

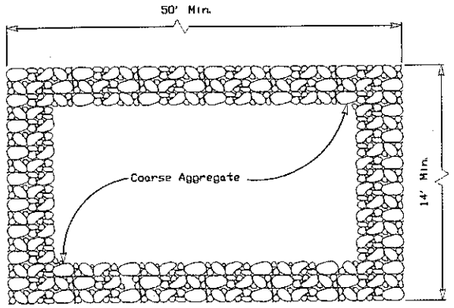

PLAN

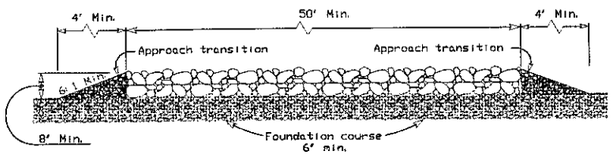

PROFILE

STABLIZED CONSTRUCTION ENTRANCE

GENERAL NOTES

1. The length of the stabilized construction entrance shall not be less than 50'.
2. The coarse aggregate should be open graded with a size of 4" to 8".
3. The approach transitions should be no steeper than 6:1 and constructed as directed by the Engineer.
4. The construction entrance foundation course shall be flexible base, bituminous concrete, portland cement concrete or other material as approved by the Engineer.
5. The guidelines shown hereon are suggestions only and may be modified by the Engineer.

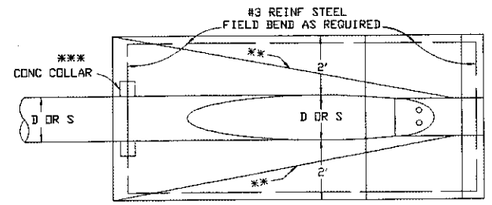

SINGLE PIPE PLAN

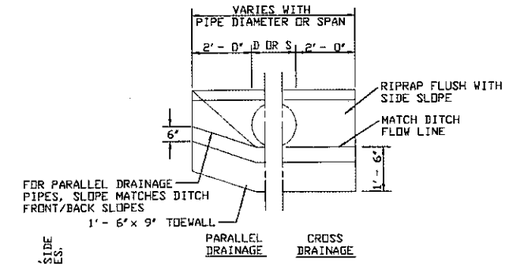

SINGLE PIPE
END ELEVATION

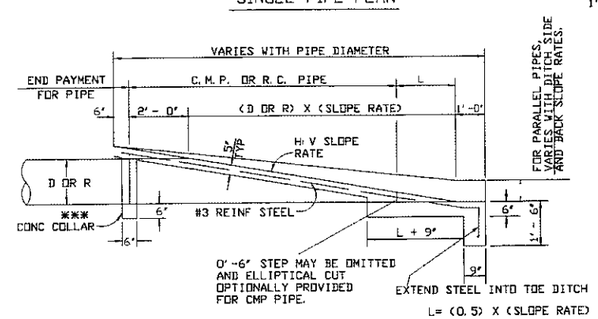

SIDE ELEVATION

SAFETY END TREATMENT
TYPE II

* CLEAR DISTANCE VARIES WITH PIPE DIAMETER.

** BREAK IN SLOPE APPLIES ONLY TO PARALLEL DRAINAGE PIPES.

*** WHEN NECESSARY

D = DIAMETER OF CIRCULAR PIPE

S = SPAN OF ARCH/ELLIPTICAL PIPE

R = RISE OF ARCH/ELLIPTICAL PIPE

GENERAL NOTES:

USE CLASS 'C' FOR ALL RIPRAP CONCRETE. REINFORCE WITH WWF 6X6-W2.9XW2.9 AND #3 REINFORCING STEEL AS SHOWN.

SLOPE RATE SHALL BE 6:1 OR FLATTER FOR PARALLEL DRAINAGE INSTALLATIONS; SLOPE RATE MATCHES ADJACENT SIDE SLOPE RATE FOR CROSS DRAINAGE INSTALLATIONS.

CONSIDER RIPRAP CONCRETE CL 'C', REINFORCING STEEL, CORRUGATED METAL PIPE OR REINFORCED CONCRETE PIPE SUBSIDIARY TO PERTINENT ITEM.

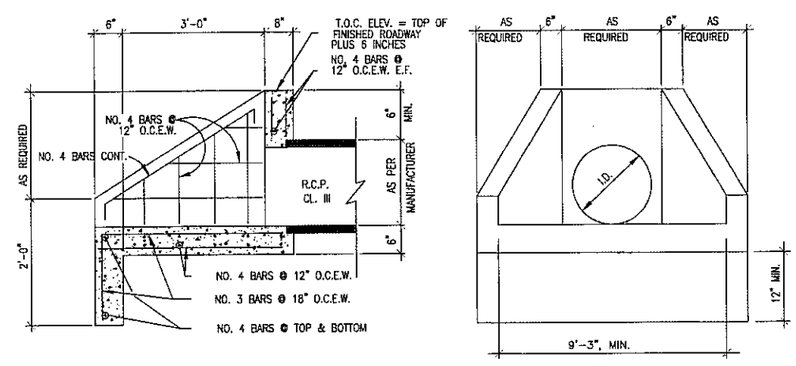

SECTION

FRONT

HEADWALL DETAIL
N.T.S.

CIVIL DETAILS

NOTE: THIS DRAWING WAS CREATED FOR PRODUCTION ON 22" x 34" SHEET SIZE. DO NOT SCALE PRINTS.

Texas Department of Transportation
125 E. 11th Street
Austin, Texas 78701-2483
(512) 416-3048
Copyright © 2005 Texas Department of Transportation

STATE OF TEXAS
DAVID W. HAN
48777
REGISTERED PROFESSIONAL ENGINEER
3/23/05

SOUTH TRAVIS AREA ENGINEER AND MAINTENANCE FACILITY
AUSTIN, TRAVIS COUNTY
AUSTIN DISTRICT 14

Revisions

Drawn by: JOT
Project No. 470400238
Date 03.23.2005
Sheet No.
C5.2
of sheets

CADFILE: T:\MNTFNID14\AUS\470400238\Cad\Civil\0238_C_DETAILS.dwg Plotted: Wed, Mar. 23, 2005 @ 11:38 AM By: JTATE

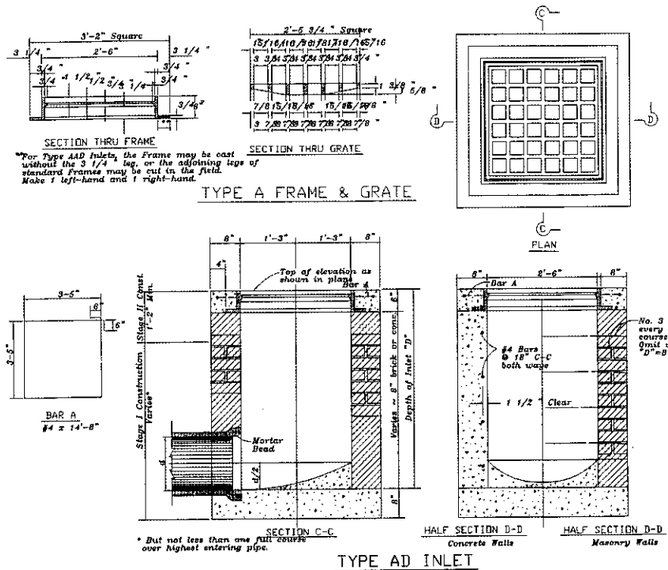

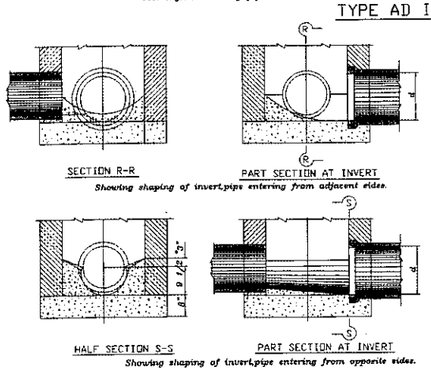

GENERAL NOTES:

Equip Type AD Inlets with Type A Frame and Type AD Grate.

Where size of pipes passing through inlet exceeds 30", increase inside width of diameter of pipe and slope walls from horizontal diameter of pipe to 2'-6" at top.

Provide and place Cast Iron Manhole steps (See Manhole Details) spaced at 18" centers and located on wall as directed where "D" exceeds 5'-0".

Build Type AD & AAD Inlets to Stage I and finish after all grading operations are substantially completed.

Use Ductile Iron for Type AD Grates. Type A Frames and Grates may be Gray Cast Iron.

Consider the furnishing and installation of Cast Iron I-Beams subsidiary to pertinent items.

AREA INLET DETAILS
TYPE AD

Austin District Standard

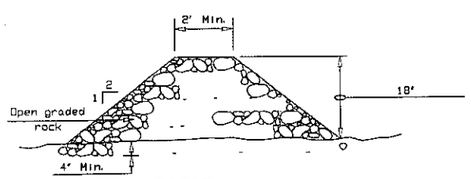

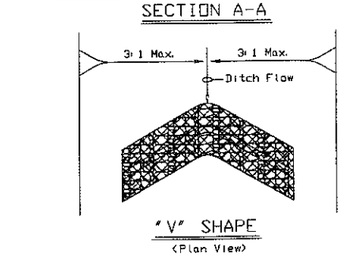

ROCK BERMS

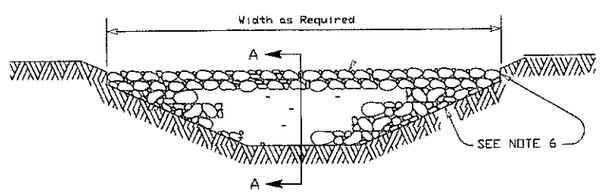

FILTER DAM AT CHANNEL SECTIONS

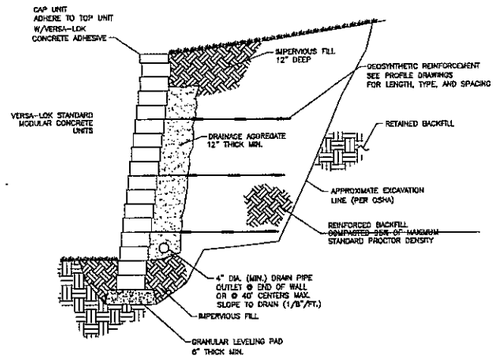

TYPICAL SECTION-REINFORCED RETAINING WALL

MODULAR CONCRETE UNIT
SCALE: NONE

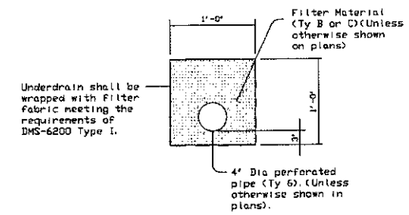

UNDERDRAIN DETAIL

① For systems utilizing continuous structural pins passing thru a minimum of 3 block layers, the minimum block depth shall be 8". The maximum vertical spacing of primary reinforcement on these systems shall be 24", and intermediate reinforcement will not be required.

② Unless noted elsewhere in the plans, 1'-0" minimum cover shall be provided from the top of leveling pad to finish grade.

③ For walls which are designated as landscape walls and are less than 6' tall, the following modifications to the design criteria will be allowed:

Factor of safety in sliding > 1.2.
Factor of safety in overturning > 1.5.
Connection strength factor of safety of 1.0 at 3/4" strain.
Minimum earth reinforcement length of 4'.

The above modified criteria does not apply to walls over 6' tall regardless of designation.

EARTH REINFORCEMENTS:

Walls may be constructed without earth reinforcements if all stability criteria are met with the blocks alone. If all stability criteria are not satisfied, earth reinforcements shall be provided.

The long term design strength (LTDS) of earth reinforcement shall be calculated in accordance with current AASHTO Standard and Interim Specifications.

Soil-geogrid pullout coefficient values shall be determined in accordance with Geosynthetics Research Institute (GRI) Method GG-5, "Guidelines for Evaluating Geogrid Pullout".

For the combination of concrete block and geogrid chosen, connection strength data shall be provided. The allowable connection load shall be limited to the connection strength developed at 3/4" displacement, divided by a 1.5 safety factor. ③

For internal stability calculations, the failure plane will be assumed to originate at the back of the concrete blocks.

The factor of safety against pullout of the earth reinforcements shall be determined from test data evaluated at 3/4" strain.

The maximum vertical spacing of primary earth reinforcement layers shall be 40 inches. ①

The minimum length of primary earth reinforcements shall be 8 feet, measured from the front of the blocks. ①

A layer of intermediate reinforcement shall be provided between primary reinforcements when the spacing between primary layers exceeds twice the horizontal depth of the concrete block unit. Intermediate reinforcement shall have a minimum length of 4 feet, and shall provide local stability for the concrete block units. ①

STABILITY CRITERIA:

Factor of safety in sliding along the base of the structure shall be greater than or equal to 1.5. ③

Factor of safety in overturning shall be greater than or equal to 2.0. ③

The base pressure resultant shall fall within the middle third of the retaining wall.

DESIGN PARAMETERS:

Structure shall be based on the following design parameters:

Random Backfill: Unit weight = 120 pcf.
(Embankment or Existing Soils) ϕ = 30° c = 0 psf
Select Backfill: Unit weight = 120 pcf
ϕ = 34° c = 0 psf

GENERAL NOTES:

Sections and Typical Elevation shown are for informational purposes only. Specific geometry is to be determined based on wall layouts and other plan information.

Unless otherwise shown in the plans, wall batter shall be a maximum of 3" per foot. Blocks shall be placed horizontally, and a positive means of obtaining batter such as pins, keyways, or concrete lips shall be provided.

COLOR AND TEXTURE OF BLOCKS AS SPECIFIED BY THE ARCHITECT.

CONCRETE BLOCK
RETAINING WALL

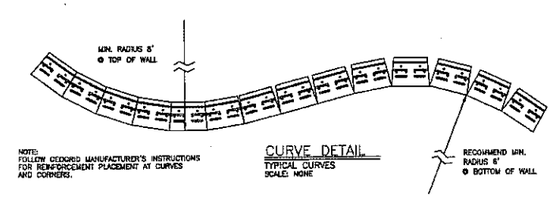

CURVE DETAIL

TYPICAL CURVES
SCALE: NONE

CIVIL DETAILS

Texas Department of Transportation
125 E. 11th Street
Austin, Texas 78701-2483
(512) 416-3048

Copyright © 2005 Texas Department of Transportation

STATE OF TEXAS
DAVID W. HAM
46772
REGISTERED PROFESSIONAL ENGINEER
3/23/05

SOUTH TRAVIS AREA ENGINEER AND MAINTENANCE FACILITY
AUSTIN, TRAVIS COUNTY
AUSTIN DISTRICT 14

Revisions

Drawn by: JOT
Project No. 470400238
Date 03.23.2005
Sheet No. C5.3
of sheets

NOTE: THIS DRAWING WAS CREATED FOR PRODUCTION ON 22" x 34" SHEET SIZE. DO NOT SCALE PRINTS.

CADFILE: T:\WNTFMD14\AUS\470400238\Acad\Civil\0238_C_DETAILS.dwg Plotted: Wed, Mar. 23, 2005 @ 11:26 AM By: JTATE

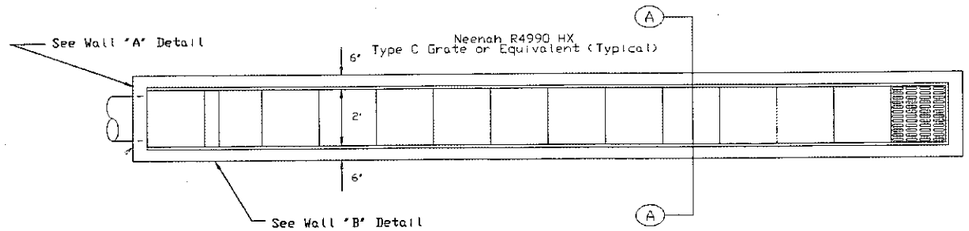

PLAN

LOCATION AND ELEVATION TABLE								
INLET DESIGNATION	STATION/OFFSET @ H_1	STATION/OFFSET @ H_2	F	H_1	H_2	G_1	G_2	G_3

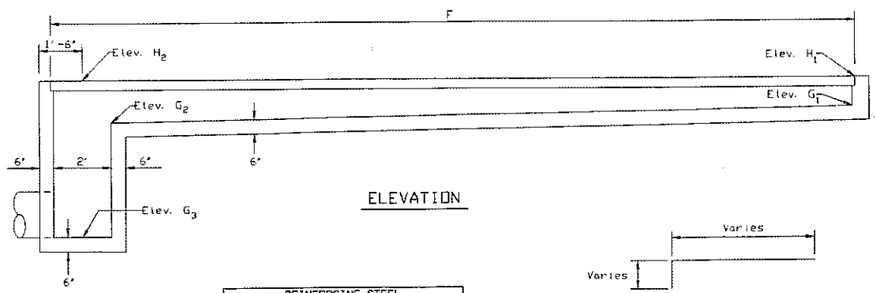

ELEVATION

REINFORCING STEEL		
BAR	SIZE	SPACING
A	#4	16"±
B	#4	12"±
C	#4	9"
D	#4	9"

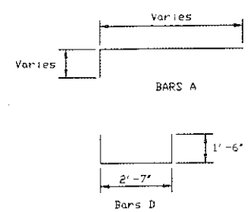

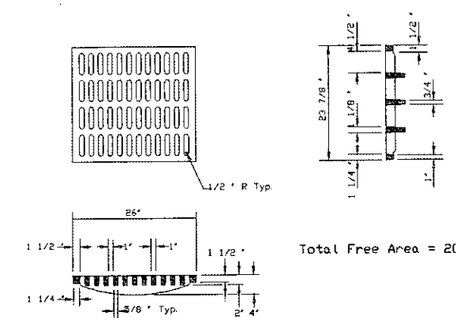

Total Free Area = 208 Sq. In. /Grate

GRATE DETAILS

GENERAL NOTES:

Use Neenah R-4990-HX Type 'C' Grate or equivalent for Driveway Drain as approved by the Engineer.

Consider Excavation, Backfill, Frames and Grates subsidiary to pertinent Item.

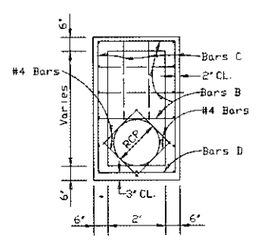

WALL 'A' DETAIL

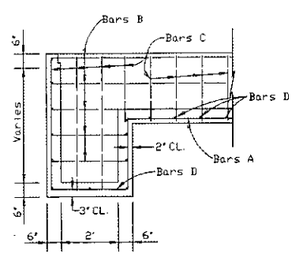

WALL 'B' DETAIL

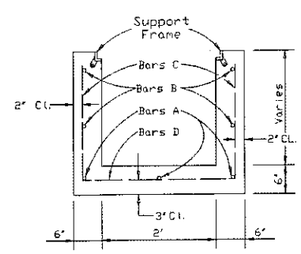

SECTION A - A

DRIVEWAY DRAIN
TYPE DD

Austin District Standard

CIVIL DETAILS

Texas Department of Transportation
125 E. 11th Street
Austin, Texas 78701-2483
(512) 416-3048
Copyright © 2005 Texas Department of Transportation

STATE OF TEXAS
DAVID "H." HAM
65772
REGISTERED PROFESSIONAL ENGINEER
3/23/05

SOUTH TRAVIS AREA ENGINEER AND MAINTENANCE FACILITY
AUSTIN, TRAVIS COUNTY
AUSTIN DISTRICT 14

Revisions

Drawn by: JOT
Project No. 470400238
Date 03.23.2005
Sheet No.
C5.4
of sheets

CADFILE: T:\MNTFMD14\US470400238\cad\Civil\0235_C_DETAILS.dwg Plotted: Wed, Mar. 23, 2005 @ 11:38 AM By: JTATE

NOTE: THIS DRAWING WAS CREATED FOR PRODUCTION ON 22" x 34" SHEET SIZE. DO NOT SCALE PRINTS.

METER NOTES:

1. SERVICE PIPE SHALL BE COPPER TUBE SIZE. IT MAY BE 150 PSI ANNEALED SEAMLESS TYPE "K" COPPER TUBING (NO SWEAT OR SOLDERED JOINTS) 200 PSI BLACK COLORED POLYETHYLENE HAVING A DIMENSION RATIO OF 9 (DR9).
2. SERVICE SADDLES SHALL BE COMPLETELY WRAPPED WITH 8 MIL POLYETHYLENE FILM.
3. PIPE MARKED "Z" SHALL BE A MINIMUM OF 4' LONG METAL PIPE.
4. TOP OF BOXES SHALL BE 1" ABOVE GROUND OR FLUSH WITH PAVEMENT SURFACE.
5. IF TWO METERS ARE INSTALLED WITH A SINGLE SERVICE LINE, THEY SHALL BE INSTALLED IN SEPARATE BOXES WITH PIPING AS SHOWN FROM A TEE. THE COMMON SERVICE LINE TO THE TEE SHALL BE 2" FOR TWO 1-1/2" METERS, OR 4" DUCTILE IRON PIPE FOR TWO 2" METERS.
6. PIPING AND TUBING IN STREET RIGHT-OF-WAY SHALL BE BEDDED IN GRANULAR MATERIALS AS REQUIRED BY SECTIONS VI A-3.3 AND VII A-3.3 OF THE WATER AND WASTEWATER DEPARTMENT STANDARD CONSTRUCTION SPECIFICATIONS; BACKFILL ABOVE GRANULAR BEDDING AS REQUIRED BY SECTIONS VI A-4.3 AND VII A-4.3.
7. BOX MUST BE BEHIND CURB AND/OR WALK AND OUT OF VEHICULAR TRAFFIC AREA.

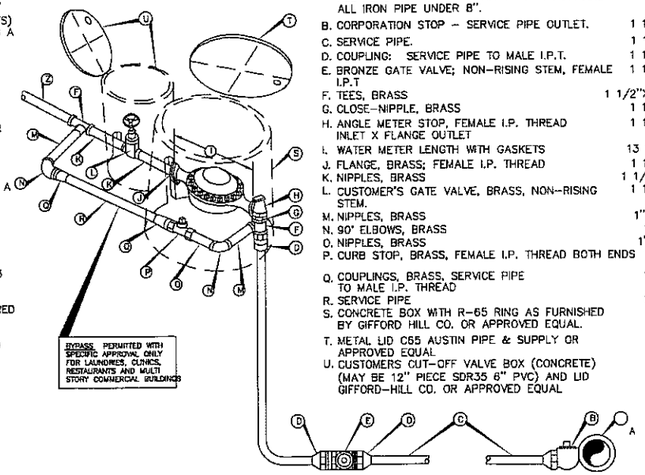

MATERIAL LIST	FOR 1 1/2" METER	FOR 2" METER
A. SERVICE CLAMP FOR CONNECTION – REQUIRED ON ALL PLASTIC AND ASBESTOS-CEMENT PIPE AND ALL IRON PIPE UNDER 8".	1 1/2"	2"
B. CORPORATION STOP – SERVICE PIPE OUTLET.	1 1/2"	2"
C. SERVICE PIPE.	1 1/2"	2"
D. COUPLING: SERVICE PIPE TO MALE I.P.T.	1 1/2"	2"
E. BRONZE GATE VALVE; NON-RISING STEM, FEMALE I.P.T	1 1/2"	2"
F. TEES, BRASS	1 1/2"X1/2"X1"	2"X2"X1"
G. CLOSE-NIPPLE, BRASS	1 1/2"	2"
H. ANGLE METER STOP, FEMALE I.P. THREAD INLET X FLANGE OUTLET	1 1/2"	2"
I. WATER METER LENGTH WITH GASKETS	13 1/4"	17-3/4"
J. FLANGE, BRASS; FEMALE I.P. THREAD	1 1/2"	2"
K. NIPPLES, BRASS	1 1/2"X8"	2"X8"
L. CUSTOMER'S GATE VALVE, BRASS, NON-RISING STEM.	1 1/2"	2"
M. NIPPLES, BRASS	1"X5"	1"X5"
N. 90° ELBOWS, BRASS	1"	1"
O. NIPPLES, BRASS	1"X3"	1"X3"
P. CURB STOP, BRASS, FEMALE I.P. THREAD BOTH ENDS	1"	1"
Q. COUPLINGS, BRASS, SERVICE PIPE TO MALE I.P. THREAD	1"	1"
R. SERVICE PIPE	1"	1"
S. CONCRETE BOX WITH R-65 RING AS FURNISHED BY GIFFORD HILL CO. OR APPROVED EQUAL.		
T. METAL LID C65 AUSTIN PIPE & SUPPLY OR APPROVED EQUAL.		
U. CUSTOMERS CUT-OFF VALVE BOX (CONCRETE) (MAY BE 12" PIECE SDR35 6" PVC) AND LID GIFFORD-HILL CO. OR APPROVED EQUAL		

9 1-1/2" & 2" METER DETAIL
SCALE: N. T. S.

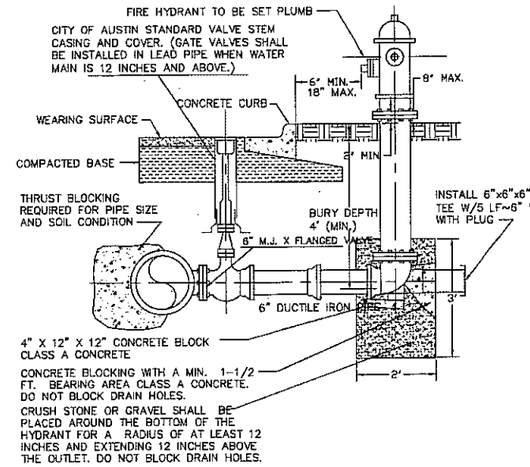

6 STANDARD FIRE HYDRANT INSTALLATION
SCALE: N. T. S.

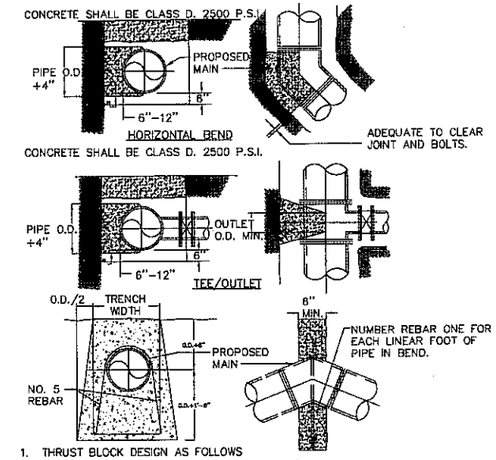

1. THRUST BLOCK DESIGN AS FOLLOWS
   A. PRESSURE OF 150 P.S.I. (ACTUAL IF HIGHER) + 50% SURGE ALLOWANCE.
   B. MAXIMUM SOIL BEARING:

SOIL TYPE	PRESSURE
LIMESTONE	4000 LBS/SQ. FT.
UNDISTURBED SOIL / CALICHE	2000 LBS/SQ. FT.
LOOSE / SPONGY SOIL	1500 LBS/SQ. FT.

3 CONCRETE THRUST DETAIL
SCALE: N. T. S.

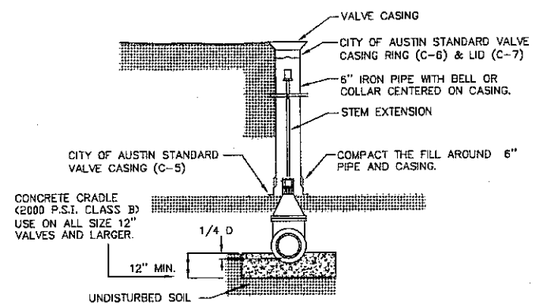

8 GATE VALVE
SCALE: N. T. S.

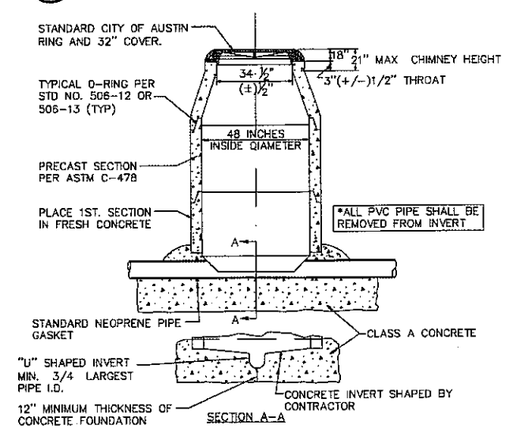

2 MANHOLE FLOOR PLAN
SCALE: N. T. S.

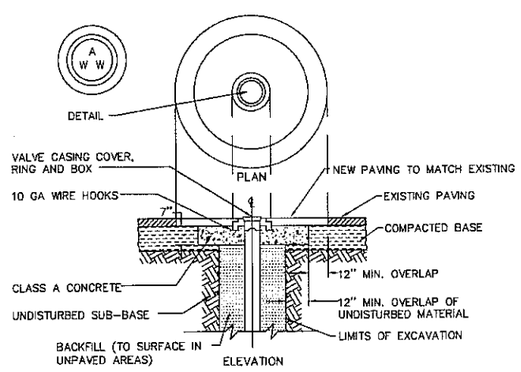

NOTES:

1. ALL SIDES OF EXCAVATION FOR BASE MATERIAL SHALL BE VERTICAL, AND ALL LOOSE OR DISTURBED MATERIAL SHALL BE REMOVED.
2. REFERENCES TO PAVING REPAIRS SHALL BE DELETED WHEN CASTINGS ARE RAISED TO PREPARE A STREET FOR PAVING, BUT ALL OTHER WORK SHALL BE AS SHOWN.

7 VALVE CASING IN PAVEMENT
SCALE: N. T. S.

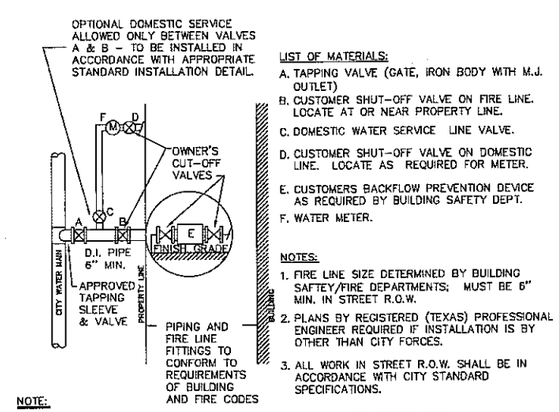

LIST OF MATERIALS:

A. TAPPING VALVE (GATE, IRON BODY WITH M.J. OUTLET)
B. CUSTOMER SHUT-OFF VALVE ON FIRE LINE. LOCATE AT OR NEAR PROPERTY LINE.
C. DOMESTIC WATER SERVICE LINE VALVE.
D. CUSTOMER SHUT-OFF VALVE ON DOMESTIC LINE. LOCATE AS REQUIRED FOR METER.
E. CUSTOMERS BACKFLOW PREVENTION DEVICE AS REQUIRED BY BUILDING SAFETY DEPT.
F. WATER METER.

NOTES:

1. FIRE LINE SIZE DETERMINED BY BUILDING SAFTEY/FIRE DEPARTMENTS; MUST BE 6" MIN. IN STREET R.O.W.
2. PLANS BY REGISTERED (TEXAS) PROFESSIONAL ENGINEER REQUIRED IF INSTALLATION IS BY OTHER THAN CITY FORCES.
3. ALL WORK IN STREET R.O.W. SHALL BE IN ACCORDANCE WITH CITY STANDARD SPECIFICATIONS.

NOTE:

ALL BACKFLOW DEVICES WILL CARRY A MANUFACTURER RATING NOT TO EXCEED A 7 P.S.I. PRESSURE DROP THROUGH BACKFLOW DEVICE AND SHALL COMPLY WITH NFPA-24 REQUIREMENTS.

4 BACKFLOW PREVENTER DETAIL
SCALE: N. T. S.

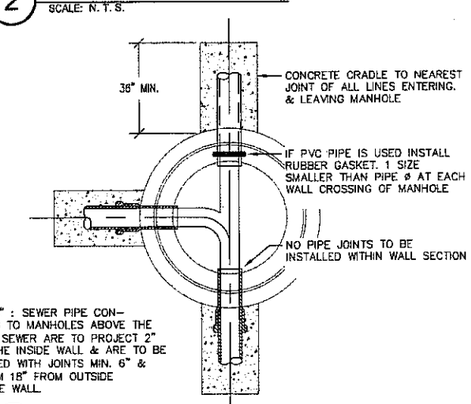

NOTE "x" : SEWER PIPE CONNECKING TO MANHOLES ABOVE THE LOWEST SEWER ARE TO PROJECT 2" FROM THE INSIDE WALL & ARE TO BE INSTALLED WITH JOINTS MIN. 6" & MAXIMUM 18" FROM OUTSIDE MANHOLE WALL.

1 MANHOLE FLOOR PLAN
SCALE: N. T. S.

CIVIL DETAILS

NOTE: THIS DRAWING WAS CREATED FOR PRODUCTION ON 22" x 34" SHEET SIZE. DO NOT SCALE PRINTS.

Texas Department of Transportation
125 E. 11th Street
Austin, Texas 78701-2483
(512) 416-3048

Copyright©2004 Texas Department of Transportation

STATE OF TEXAS
DAVID W. HAM
46772
REGISTERED PROFESSIONAL ENGINEER
3/22/05

AREA ENGINEER
AND MAINTENANCE FACILITY
AUSTIN, TRAVIS COUNTY
AUSTIN DISTRICT 14

Revisions

Drawn by: XXX
Project No. 470400238
Date 12.06.2004
Sheet No.
C5.5
of X sheets

CADFILE: T:\MNTFM\D14AUSW\70400238\Cad\Civil\DETAILS.dwg Plotted: Fri, Mar. 11, 2005 @ 9:33 AM By: DHAM

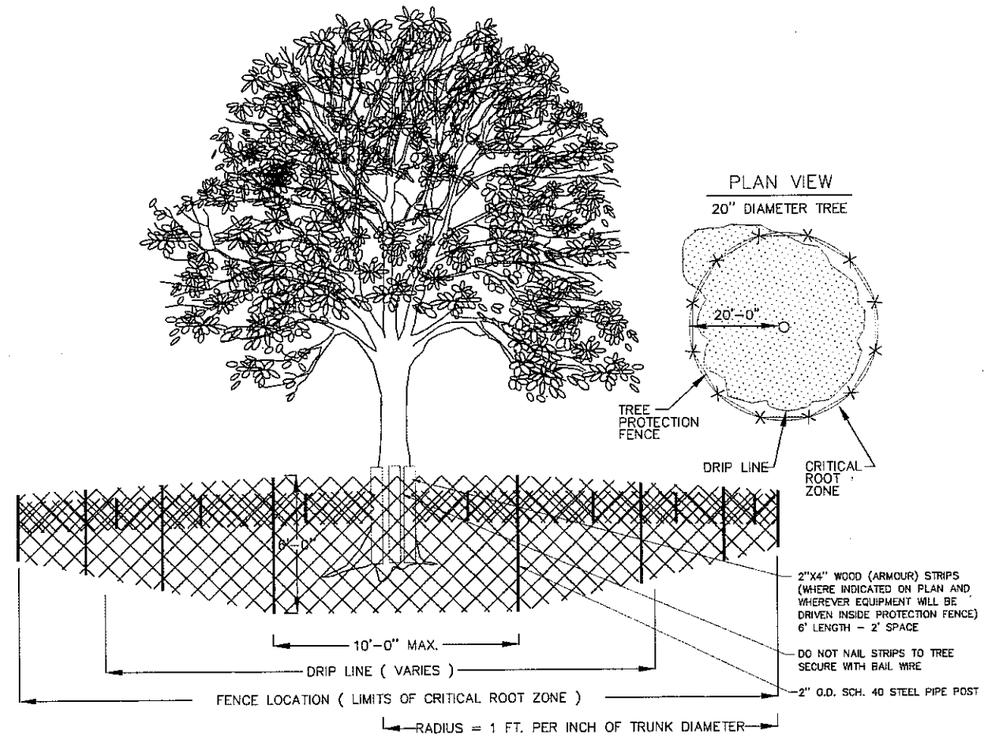

TREE PROTECTION

N.T.S.

Texas Department of Transportation
125 E. 11th Street
Austin, Texas 78701-2483
(512) 416-3040
Copyright © 2005 Texas Department of Transportation

STATE OF TEXAS
DAVID H. NAM
46772
REGISTERED PROFESSIONAL ENGINEER
3/22/05

SOUTH TRAVIS AREA ENGINEER AND MAINTENANCE FACILITY
AUSTIN, TRAVIS COUNTY
AUSTIN DISTRICT 14

Revisions

Drawn by: JOT
Project No. 470400238
Date 03.23.2005
Sheet No.
C5.6
of sheets

CADFILE: T:\MNTFMD14\US\470400238\Acad\Civil\0238_C_DETAILS.dwg Plotted: Thu, Mar. 17, 2005 @ 11:18 AM By: DHAM

NOTE: THIS DRAWING WAS CREATED FOR PRODUCTION ON 22" x 34" SHEET SIZE. DO NOT SCALE PRINTS.

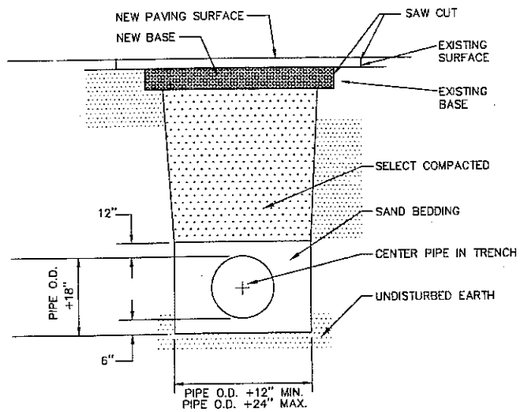

ELEVATION

NOTES:

1. THE EXISTING PAVING SURFACE SHALL BE SAW CUT IN A STRAIGHT LINE, A MINIMUM OF 12" WIDER THAN THE UNDISTURBED SIDES OF THE TRENCH, SYMMETRICAL ABOUT THE CENTERLINE OF THE EXCAVATION.
2. ANY CONCRETE PAVING SHALL BE SAW CUT 6" WIDER THAN UNDISTURBED SIDES OF EXCAVATION.
3. IF EXCAVATION AREA IS OPEN FOR TEMPORARY PUBLIC USE THE SURFACE SHALL BE MAINTAINED LEVEL WITH ADJACENT RIDING SURFACE WITH COLD MIX OR FLEXIBLE BASE MATERIAL.
4. ROAD BASE AND SURFACE MATERIALS SHALL BE REPLACED IN KIND OF EQUAL THICKNESS WITH MINIMUM BASE THICKNESS OF 8".

PIPE BEDDING

N.T.S.

BOX DATA																
SECTION DIMENSIONS					Fill Height	M (Min)	REINFORCING (in^2/ft) ②								① Lift Weight (Tons)	Governing ASTM Standard
S (ft)	H (ft)	T_T (in)	T_B (in)	T_S (in)	(ft)	(in)	A_{S1}	A_{S2}	A_{S3}	A_{S4}	A_{S7}	A_{S8}	A_{S5}	A_{S6}		
5	2	8	7	6	< 2	-	0.24	0.33	0.25	0.14	0.19	0.17	0.19	0.19	6.0	C 850
5	2	6	6	6	18	23	0.27	0.19	0.19	0.14	-	-	-	-	5.1	C 789

⑤

① For Box Length = 8'-0"

② A_{S1} thru A_{S4}, A_{S7} and A_{S8} are minimum required areas of reinforcement per linear foot of box length. A_{S6} and A_{S5} are minimum required areas of reinforcement per linear foot of box width.

⑤ These designs were created by TxDOT and are not shown in the ASTM Specifications.

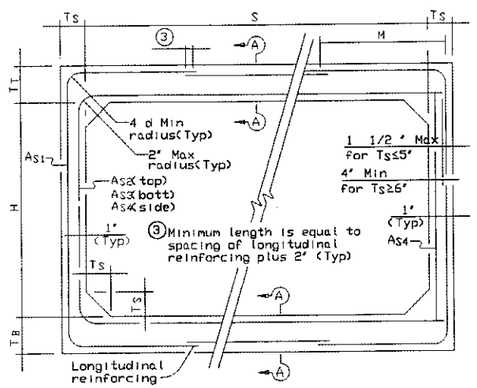

C789 CORNER OPTION 'A'

C789 CORNER OPTION 'B'

ASTM C789 STANDARD

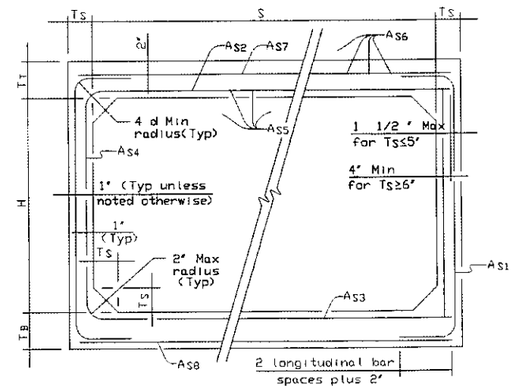

C850 CORNER OPTION 'A'

C850 CORNER OPTION 'B'

ASTM C850 STANDARD

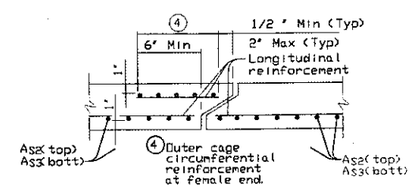

SECTION A-A

(TOP AND BOTTOM SLAB JOINT REINFORCEMENT)

GENERAL NOTES:

Designs shown conform to ASTM C789 or ASTM C850. Refer to ASTM C789 or ASTM C850 for information or details not shown.

For ASTM C789 designs, all reinforcing steel shall have a minimum specified yield stress of 65 ksi.

For ASTM C850 designs, all reinforcing steel shall have a minimum specified yield stress of 60 ksi.

All concrete shall be Class 'H' Concrete with a minimum compressive strength of 5,000 psi.

See SCP-MD standard sheet for miscellaneous details and notes not shown.

Designed to the maximum fill height shown.

In lieu of furnishing the designs shown on this sheet, the contractor may furnish an alternate design that is equal to or exceeds the box design for the design fill height in the table. Shop plans for alternate designs shall be submitted in accordance with Item 'Precast Concrete Structures'.

SINGLE BOX CULVERTS
PRECAST
5'-0" SPAN

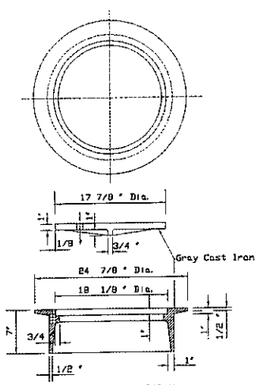

Approximate Weight 240 lbs.

RING AND COVER DETAILS

V-1846-2 or Equal

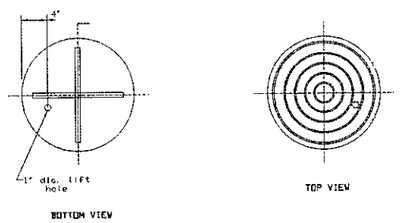

GENERAL NOTES:

Use class 'A' for all Concrete.

Construct Manhole walls of concrete sewer brick, precast concrete, or concrete blocks. Ensure maximum size of concrete block is 8"x8"x16".

Fit existing inlets to be capped with either a precast or cast in place cap, as directed. Use noncorroding rigid metal to form the bottom of cast in place cap. Ensure the size and shape conforms to the inside dimensions of the inlet. Ensure the form is suspended such that no inside support is required.

Consider excavation and backfill, frames, grates, rings and covers subsidiary to pertinent Items.

Ensure connecting pipes enter within 10 degrees of normal to inlet wall. Use pipe elbow or curved approach alignment as necessary to meet this requirement.

Use alternate frame and cover only as approved by the Engineer.

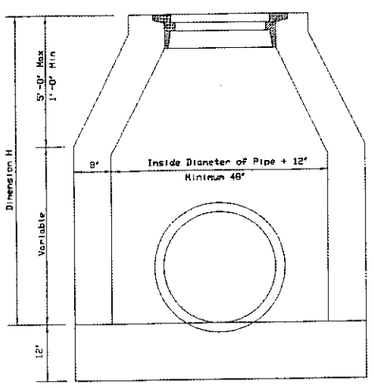

℄ SECTION OF MANHOLE

STORM SEWER MANHOLE

Texas Department of Transportation
125 E. 11th Street
Austin, Texas 78701-2483
(512) 416-3048
Copyright © 2005 Texas Department of Transportation

STATE OF TEXAS
DAVID W. HAN
46772
REGISTERED PROFESSIONAL ENGINEER
3/23/05

SOUTH TRAVIS AREA ENGINEER AND MAINTENANCE FACILITY
AUSTIN, TRAVIS COUNTY
AUSTIN DISTRICT 14

Revisions

Drawn by: JOT
Project No. 470400238
Date 03.23.2005
Sheet No.
C5.7
of sheets

CADFILE: T:\MNTFMD14AUS470400238\Acad\Ch#0238_C_DETAILS.dwg Plotted: Wed, Mar. 23, 2005 @ 11:48 AM By: JTATE

NOTE: THIS DRAWING WAS CREATED FOR PRODUCTION ON 22" x 34" SHEET SIZE. DO NOT SCALE PRINTS.

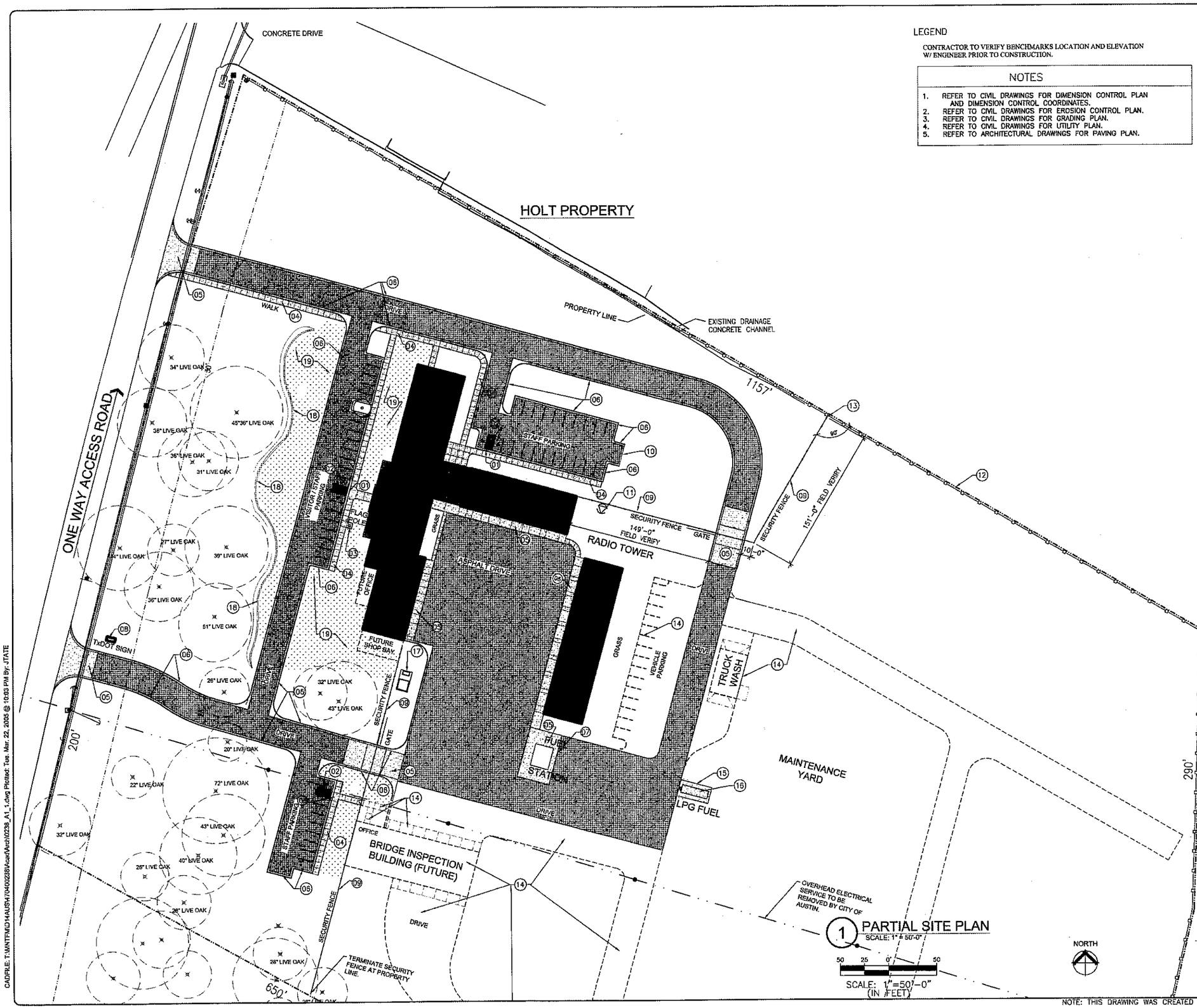

1 PARTIAL SITE PLAN
SCALE: 1" = 50'-0"

LEGEND

CONTRACTOR TO VERIFY BENCHMARKS LOCATION AND ELEVATION W/ ENGINEER PRIOR TO CONSTRUCTION.

NOTES
1. REFER TO CIVIL DRAWINGS FOR DIMENSION CONTROL PLAN AND DIMENSION CONTROL COORDINATES.
2. REFER TO CIVIL DRAWINGS FOR EROSION CONTROL PLAN.
3. REFER TO CIVIL DRAWINGS FOR GRADING PLAN.
4. REFER TO CIVIL DRAWINGS FOR UTILITY PLAN.
5. REFER TO ARCHITECTURAL DRAWINGS FOR PAVING PLAN.

KEY NOTES:

01. HANDICAP CURB CUT – REFER TO SHEET C5.1
02. 4" WIDE STRIPPING AND HANDICAP LOGOS – REFER TO SHEET C5.1
03. FLAG POLE – REFER TO DETAIL 9 SHEET A1.3
04. 4" THICK REINFORCED CONCRETE WALK – REFER TO SHEET C5.1
05. REINFORCED CONCRETE APRON – REFER TO SHEET C5.1. SCORE CONTROL JOINTS AS SHOWN AND PROVIDE ½" THICK EXPANSION JOINT AT 20'-0"± MAXIMUM (SEE CIVIL)
06. CONCRETE CURB AND GUTTER – REFER TO SHEET C5.1. EXTEND TO CONCRETE WALK
07. FUELING STATION – REFER TO SHEET A2.5.
08. BUILDING IDENTIFICATION SIGN – REFER TO DETAIL 1 SHEET A1.3
09. CONTINUOUS SECURITY FENCE AND GATE REFER TO SHEET A1.4 FOR DETAILS.
10. LAY DOWN CONCRETE CURB, SIMILAR TO DETAIL 9 SHEET A1.4
11. COMMUNICATION TOWER – NOT IN CONTRACT (N.I.C.)
12. EXISTING FENCE TO REMAIN, PROTECT.
13. START POINT OF NEW SECURITY FENCE, NEW FENCE MUST BE PERPENDICULAR TO EXISTING FENCE.
14. FUTURE FACILITY, BUILDING AND PAVING AREAS ARE NOT IN CONTRACT.
15. CONCRETE SLAB FOR LPG TANK, REFER TO SHEET 5/A2.5.
16. LPG TANK, BY OWNER, NOT IN CONTRACT.
17. CONCRETE PAD FOR TRANSFORMER AND GENERATOR.
18. DRY-STACK LIMESTONE RETAINING WALL, REFER TO SHEET
19. LANDSCAPING, REFER TO SHEETS L5, L8, AND L9 FOR ADDITIONAL INFORMATION.

GENERAL NOTES:

1. REFER TO SHEET FOR DIMENSIONAL SITE PLAN.
2. REFER TO SHEET LX FOR LANDSCAPING SITE PLAN.
3. REFER TO SHEET A2.1, A2.2, A2.3, A2.4, AND A2.5 FOR LARGE SCALE PLANS AND ADDITIONAL INFORMATION
4. ALL DIMENSIONS ARE FROM BACK OF CURB, FACE OF MASONRY, PROPERTY LINE OR METAL WALL PANEL
5. ALL SITE IMPROVEMENTS ADJACENT TO PROPERTY LINE SHALL EXTEND TO PROPERTY LINE OR TO SECURITY FENCE – REFER TO TYPICAL FENCE DETAIL SHEET A1.4
6. REFER TO ARCHITECTURAL DRAWINGS FOR DIMENSION CONTROL PLAN AND DIMENSION CONTROL COORDINATES.
7. REFER TO CIVIL DRAWINGS FOR EROSION CONTROL PLAN.
8. REFER TO CIVIL DRAWINGS FOR GRADING PLAN.
9. REFER TO CIVIL DRAWINGS FOR UTILITY PLAN.
10. REFER TO ARCHITECTURAL DRAWINGS FOR PAVING PLAN.

SITE PLAN LEGEND:

- ASPHALT PAVING AND BASE AS SCHEDULED FOR BIDDING UNDER THIS CONTRACT.
- LANDSCAPING AND IRRIGATION SYSTEM AS SPECIFIED – REFER TO SHEET LXX
- REINFORCED CONCRETE PAVING / WALK – REFER TO DETAILS ON SHEET C5.1
- FINISH GRADING REQUIRED TO CONTRACT BOUNDARY LINE. REMOVE ALL DEBRIS AND RAKE SMOOTH
- CONCRETE CURB AND GUTTER – REFER TO SHEET C5.1
- LANDSCAPING, PROTECT EXISTING TREES AND VEGETATION. REFER TO CIVIL DRAWINGS.
- PROPERTY LINE
- EXISTING FENCE

SITE PLAN

NOTE: THIS DRAWING WAS CREATED FOR PRODUCTION ON 22" x 34" SHEET SIZE. DO NOT SCALE PRINTS.

Texas Department of Transportation
125 E. 11th Street
Austin, Texas 78701-2483
(512) 416-3648
Copyright © 2005 Texas Department of Transportation

REGISTERED ARCHITECT ROEL BAZAN 14289 STATE OF TEXAS

SOUTH TRAVIS AREA ENGINEER AND MAINTENANCE FACILITY

AUSTIN, TRAVIS COUNTY
AUSTIN DISTRICT 14

Revisions

Drawn by: JOT
Project No. 470400238
Date 03.23.2005
Sheet No.

A1.1
of sheets

CADFILE: T:\MNTFMCD14\AUSW\70400238\Acad\Arch\0238_A1_1.dwg Plotted: Tue, Mar. 22, 2005 @ 10:03 PM By: JTATE

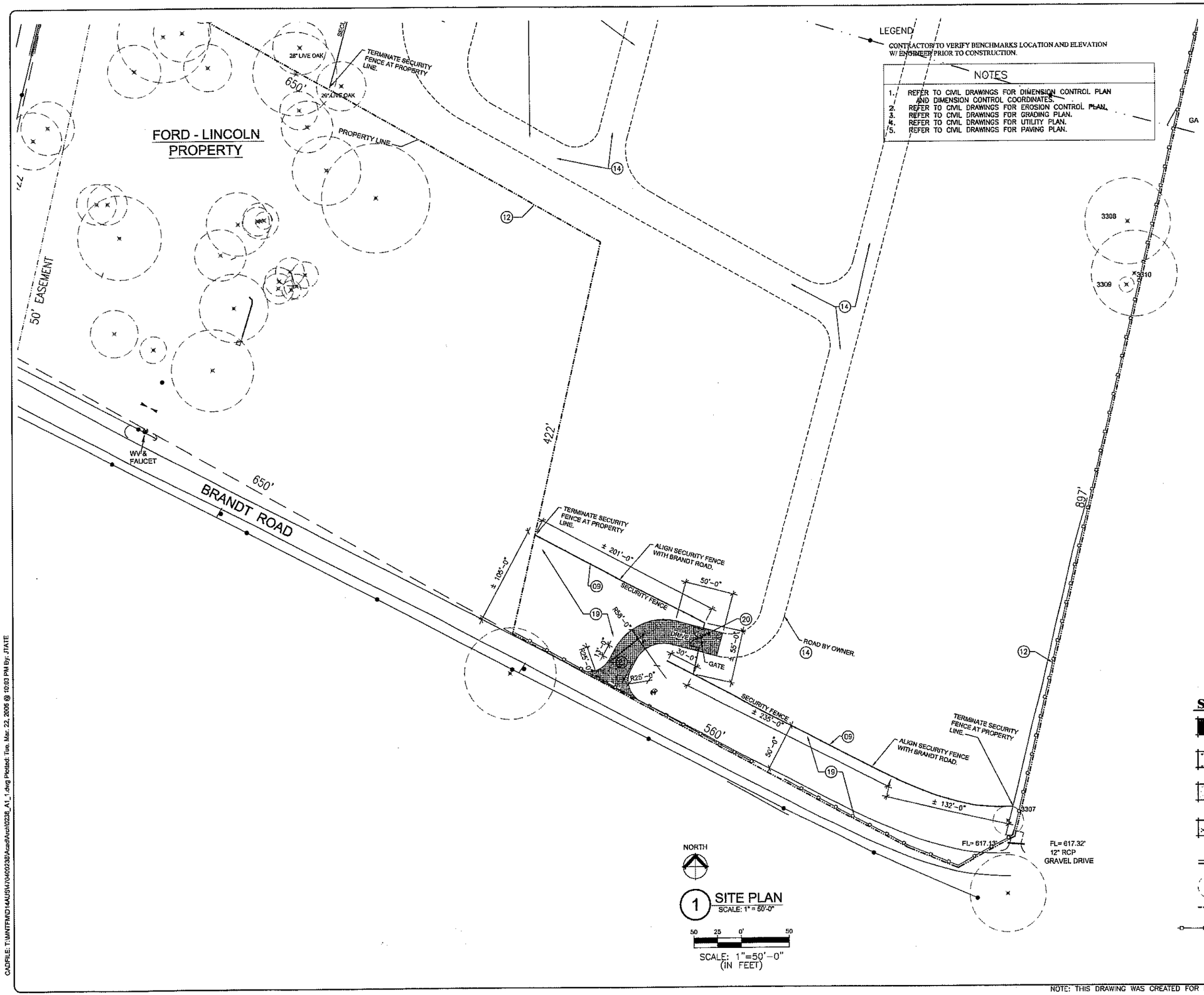

1 SITE PLAN
SCALE: 1" = 50'-0"

LEGEND

CONTRACTOR TO VERIFY BENCHMARKS LOCATION AND ELEVATION W/ ENGINEER PRIOR TO CONSTRUCTION.

NOTES

1. REFER TO CIVIL DRAWINGS FOR DIMENSION CONTROL PLAN AND DIMENSION CONTROL COORDINATES.
2. REFER TO CIVIL DRAWINGS FOR EROSION CONTROL PLAN.
3. REFER TO CIVIL DRAWINGS FOR GRADING PLAN.
4. REFER TO CIVIL DRAWINGS FOR UTILITY PLAN.
5. REFER TO CIVIL DRAWINGS FOR PAVING PLAN.

KEY NOTES:

(09) CONTINUOUS SECURITY FENCE AND GATE REFER TO SHEET A1.4 FOR DETAILS.

(12) EXISTING FENCE TO REMAIN, PROTECT.

(14) FUTURE FACILITY, BUILDING AND PAVING AREAS ARE NOT IN CONTRACT.

(19) LANDSCAPING, REFER TO SHEETS L5, L8, AND L9

(20) TWO (2) 6' WIDE CHAIN LINK GATES WITH SECURITY FENCE. SEE SHEET A1.4 PROVIDE SLATTED INSERTS FOR PRIVACY AT THIS GATE ONLY.

GENERAL NOTES:

1. REFER TO SHEET FOR DIMENSIONAL SITE PLAN.
2. REFER TO SHEET L FOR LANDSCAPING SITE PLAN.
3. REFER TO SHEET A2.1, A2.2, A2.3, A2.4, AND A2.5 FOR LARGE SCALE PLANS AND ADDITIONAL INFORMATION
4. ALL DIMENSIONS ARE FROM BACK OF CURB, FACE OF MASONRY, PROPERTY LINE OR METAL WALL PANEL
5. ALL SITE IMPROVEMENTS ADJACENT TO PROPERTY LINE SHALL EXTEND TO PROPERTY LINE OR TO SECURITY FENCE – REFER TO TYPICAL FENCE DETAIL SHEET A1.4
6. REFER TO ARCHITECTURAL DRAWINGS FOR DIMENSION CONTROL PLAN AND DIMENSION CONTROL COORDINATES.
7. REFER TO CIVIL DRAWINGS FOR EROSION CONTROL PLAN.
8. REFER TO CIVIL DRAWINGS FOR GRADING PLAN.
9. REFER TO CIVIL DRAWINGS FOR UTILITY PLAN.
10. REFER TO ARCHITECTURAL DRAWINGS FOR PAVING PLAN.

SITE PLAN LEGEND:

- ASPHALT PAVING AND BASE AS SCHEDULED FOR BIDDING UNDER THIS CONTRACT.
- LANDSCAPING AND IRRIGATION SYSTEM AS SPECIFIED – REFER TO SHEET L5, L8, AND L9
- REINFORCED CONCRETE PAVING / WALK – REFER TO DETAILS ON SHEET C5.1
- FINISH GRADING REQUIRED TO CONTRACT BOUNDARY LINE. REMOVE ALL DEBRIS AND RAKE SMOOTH
- CONCRETE CURB AND GUTTER – REFER TO SHEET C5.1
- LANDSCAPING, PROTECT EXISTING TREES AND VEGETATION. REFER TO CIVIL DRAWINGS.
- PROPERTY LINE
- EXISTING FENCE

SITE PLAN

Texas Department of Transportation
125 E. 11th Street
Austin, Texas 78701-2483
(512) 416-3848
Copyright © 2005 Texas Department of Transportation

REGISTERED ARCHITECT RIGEL BAZZANI 14289 STATE OF TEXAS
3/23/05

SOUTH TRAVIS AREA ENGINEER AND MAINTENANCE FACILITY
AUSTIN, TRAVIS COUNTY
AUSTIN DISTRICT 14

Revisions

Drawn by: JOT
Project No. 470400238
Date 03.23.2005
Sheet No.
A1.2
of sheets

NOTE: THIS DRAWING WAS CREATED FOR PRODUCTION ON 22" x 34" SHEET SIZE. DO NOT SCALE PRINTS.

CADFILE: T:\MNTFMD14AUS\470400238\Acad\Arch\0238_A1_1.dwg Plotted: Tue, Mar. 22, 2005 @ 10:03 PM By: JTATE

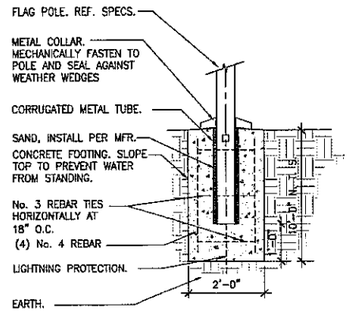

9 FLAG POLE BASE
SCALE: 1/2" = 1'-0"

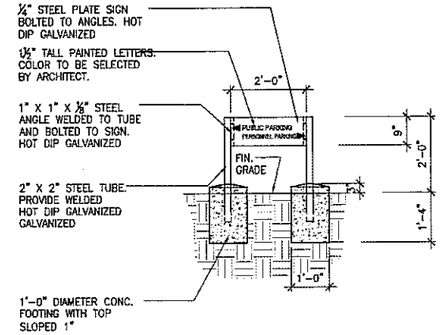

6 ENTRY SIGN ELEVATION
SCALE: 1/2" = 1'-0"

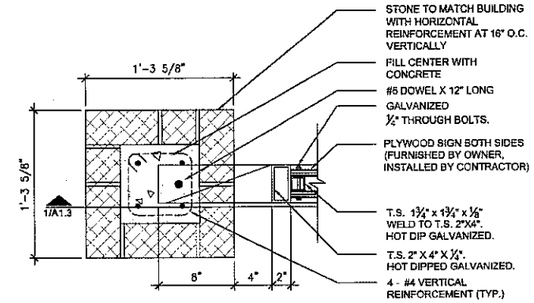

3 SIGN PLAN VIEW
SCALE: 1/2" = 1'-0"

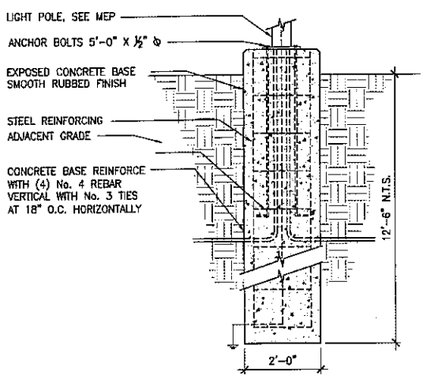

11 LIGHT POLE BASE
SCALE: 1/2" = 1'-0"

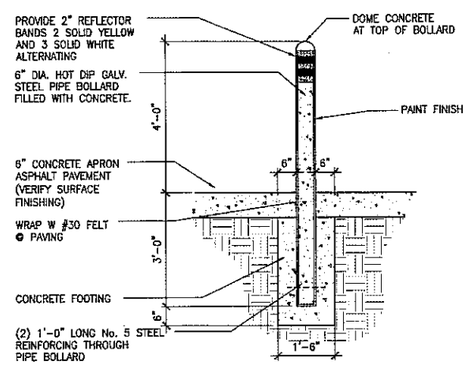

8 BOLLARD DETAIL
SCALE: 1/2" = 1'-0"

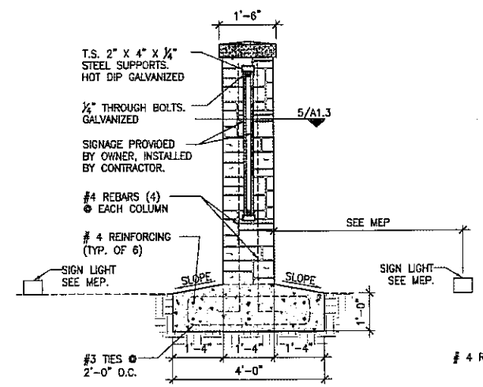

5 SIGN SECTION
SCALE: 1/2" = 1'-0"

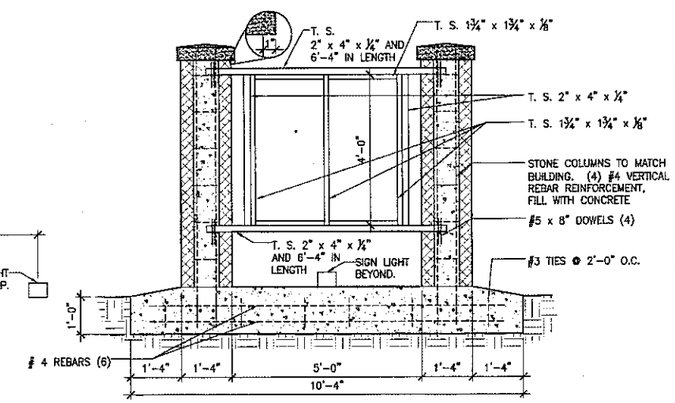

2 SIGN SECTION
SCALE: 1/2" = 1'-0"

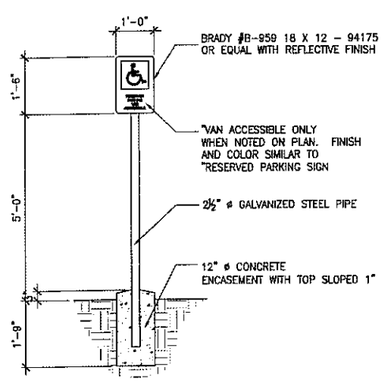

10 ACCESSIBLE SIGN
SCALE: 1/2" = 1'-0"

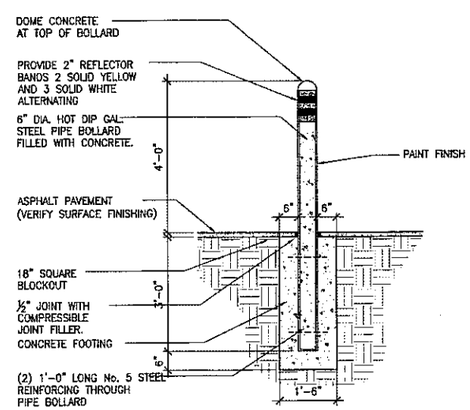

7 BOLLARD DETAIL
SCALE: 1/2" = 1'-0"

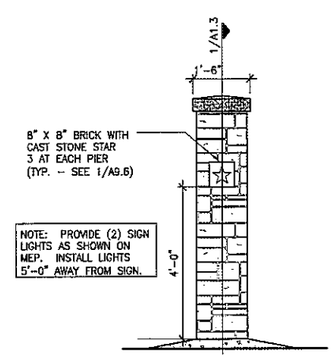

4 SIGN ELEVATION
SCALE: 1/2" = 1'-0"

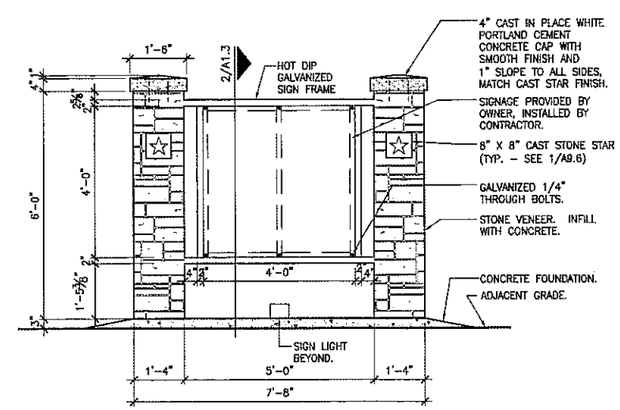

1 SIGN ELEVATION
SCALE: 1/2" = 1'-0"

SITE DETAILS

NOTE: THIS DRAWING WAS CREATED FOR PRODUCTION ON 22" x 34" SHEET SIZE. DO NOT SCALE PRINTS.

CADFILE: T:\MNTFM\D14\AUS\470400238\Acad\Arch\D238_A1_3.dwg Plotted: Tue, Mar. 22, 2005 @ 10:36 AM By: JTATE

Texas Department of Transportation
125 E. 11th Street
Austin, Texas 78701-2483
(512) 416-3046
Copyright © 2003 Texas Department of Transportation

REGISTERED ARCHITECT
RUEL BAZAN
14289
STATE OF TEXAS
3/23/05

SOUTH TRAVIS AREA ENGINEER AND MAINTENANCE FACILITY
AUSTIN, TRAVIS COUNTY
AUSTIN DISTRICT 14

Revisions

Drawn by: JOT
Project No. 470400238
Date 03.23.2005
Sheet No.
A1.3
of sheets

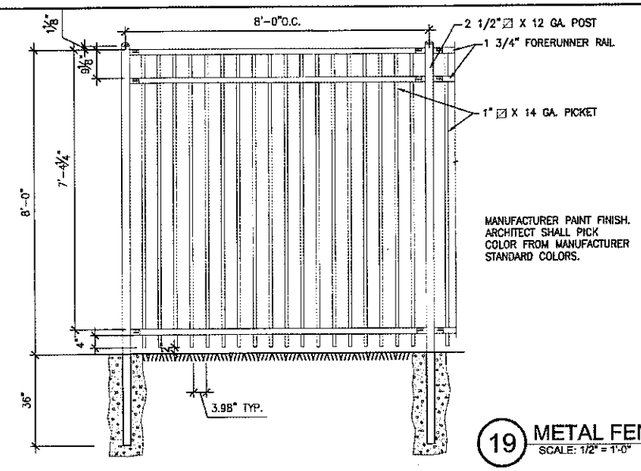

19 METAL FENCE
SCALE: 1/2" = 1'-0"

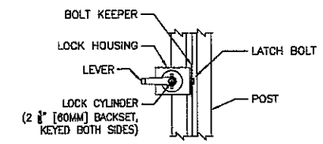

18 GATE LATCH
SCALE: N. T. S.

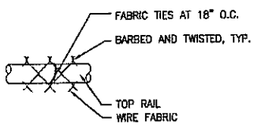

17 FABRIC & TOP RAIL
SCALE: N. T. S.

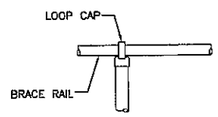

14 TOP RAIL
SCALE: N. T. S.

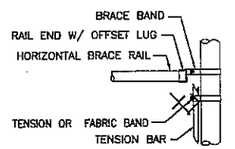

11 BRACE RAIL
SCALE: N. T. S.

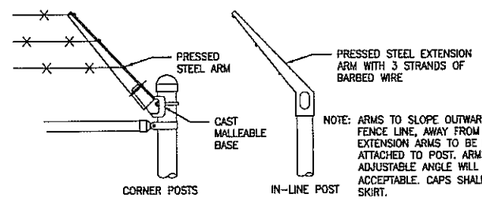

8 BARBED WIRE GATE SECTION
SCALE: 1" = 1'-0"

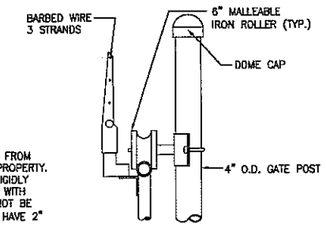

6 TOP ROLLER ASSEMBLY
SCALE: 1" = 1'-0"

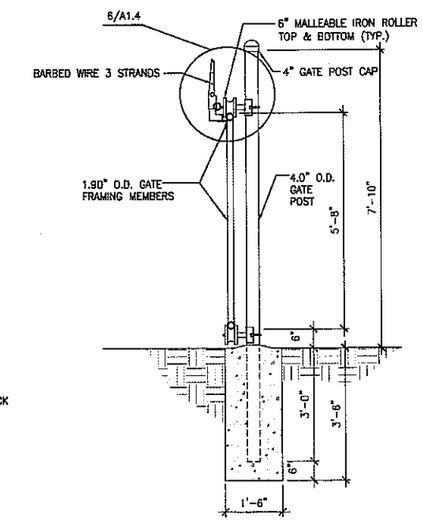

4 GATE SECTION
SCALE: 1/2" = 1'-0"

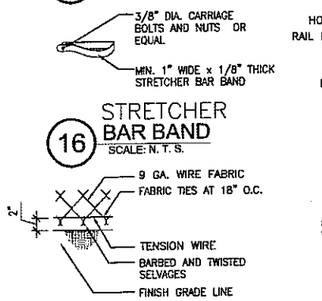

16 STRETCHER BAR BAND
SCALE: N. T. S.

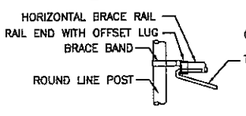

13 ELEVATION LINE POST
SCALE: N. T. S.

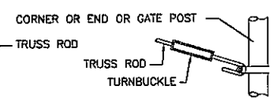

10 ELEVATION END POST
SCALE: N. T. S.

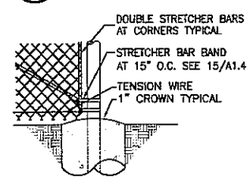

7 CORNER OR END POST DETAIL
SCALE: 1" = 1'-0"

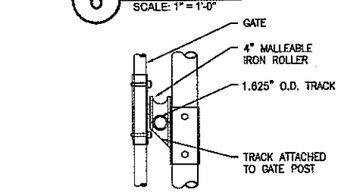

5 TRACK & ROLLER ASSEMBLY
SCALE: 1" = 1'-0"

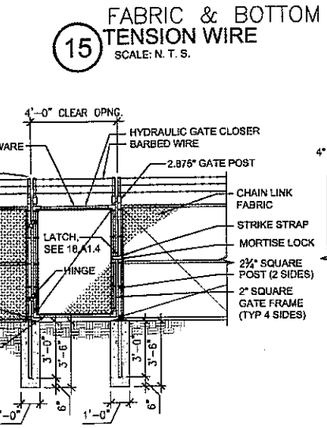

3 WALK GATE
SCALE: 1/4" = 1'-0"

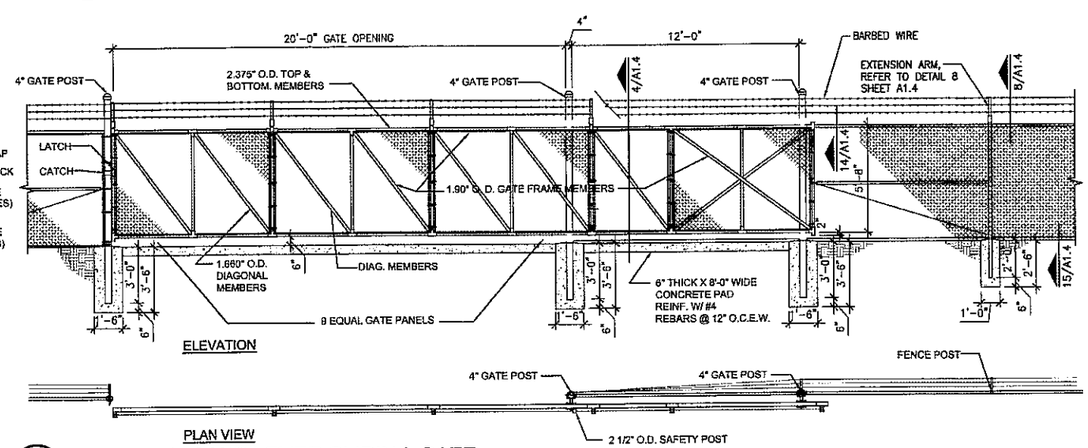

2 STANDARD CANTILEVER SLIDING GATE
SCALE: 1/4" = 1'-0"

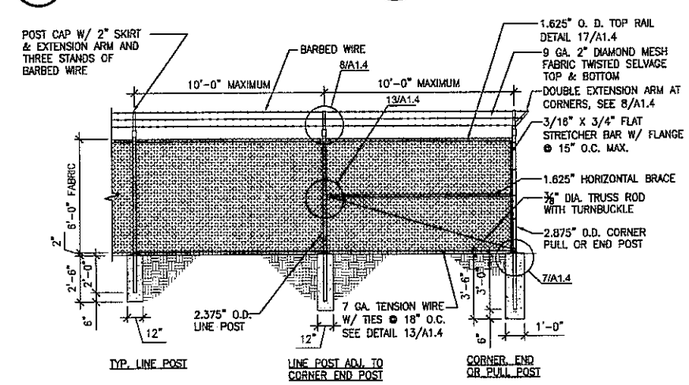

1 SECURITY FENCING WITH BARBED WIRE
SCALE: 1/4" = 1'-0"

SITE DETAILS

Texas Department of Transportation
125 E. 11th Street
Austin, Texas 78701-2483
(512) 416-3948
Copyright © 2005 Texas Department of Transportation

REGISTERED ARCHITECT MOEL BAZAN 14289 STATE OF TEXAS
3/23/05

SOUTH TRAVIS AREA ENGINEER AND MAINTENANCE FACILITY
AUSTIN, TRAVIS COUNTY
AUSTIN DISTRICT 14

Revisions

Drawn by: JOT
Project No. 470400238
Date 03.23.2005
Sheet No.
A1.4
of sheets

NOTE: THIS DRAWING WAS CREATED FOR PRODUCTION ON 22" x 34" SHEET SIZE. DO NOT SCALE PRINTS.

CADFILE: T:\MNTFMU...\S470400238\AcadArch\0208_A1_4.dwg Plotted: Tue, Mar. 22, 2005 @ 10:49 AM By: JTATE

LEGEND

249	EXISTING CONTOURS
+ 249.50	EXISTING SPOT GRADES
250	NEW FINISH GRADE
+ 249.35	NEW FINISH GRADE ELEV.
+ 249.85 T/C	TOP OF CURB ELEV.
+ 249.35 G	GUTTER ELEV.
+ 249.85 T/S	TOP OF SIDEWALK ELEV.

KEY NOTES

1. REFER TO STRUCTURAL DRAWINGS FOR SLAB ELEVATIONS @ ALL BUILDINGS

SCALE: 1"=40'-0" (IN FEET)

Enlarged Site Grading Plan

NOTE: THIS DRAWING WAS CREATED FOR PRODUCTION ON 22" x 34" SHEET SIZE. DO NOT SCALE PRINTS.

CADFILE: T:\MNTT\MD14\US470400239\Acad\Civil\0238_C1_2.dwg Plotted: Wed, Mar 23, 2005 @ 4:17 PM By: JTATE

Texas Department of Transportation
125 E. 11th Street
Austin, Texas 78701-2483
(512) 416-3048

Copyright © 2005 Texas Department of Transportation

REGISTERED ARCHITECT ROEL BAZAN 14289 STATE OF TEXAS
3/23/05

SOUTH TRAVIS AREA ENGINEER AND MAINTENANCE FACILITY
AUSTIN, TRAVIS COUNTY
AUSTIN DISTRICT 14

Revisions

Drawn by: JOT
Project No. 470400238
Date 03.23.2005
Sheet No.
A1.5
of sheets

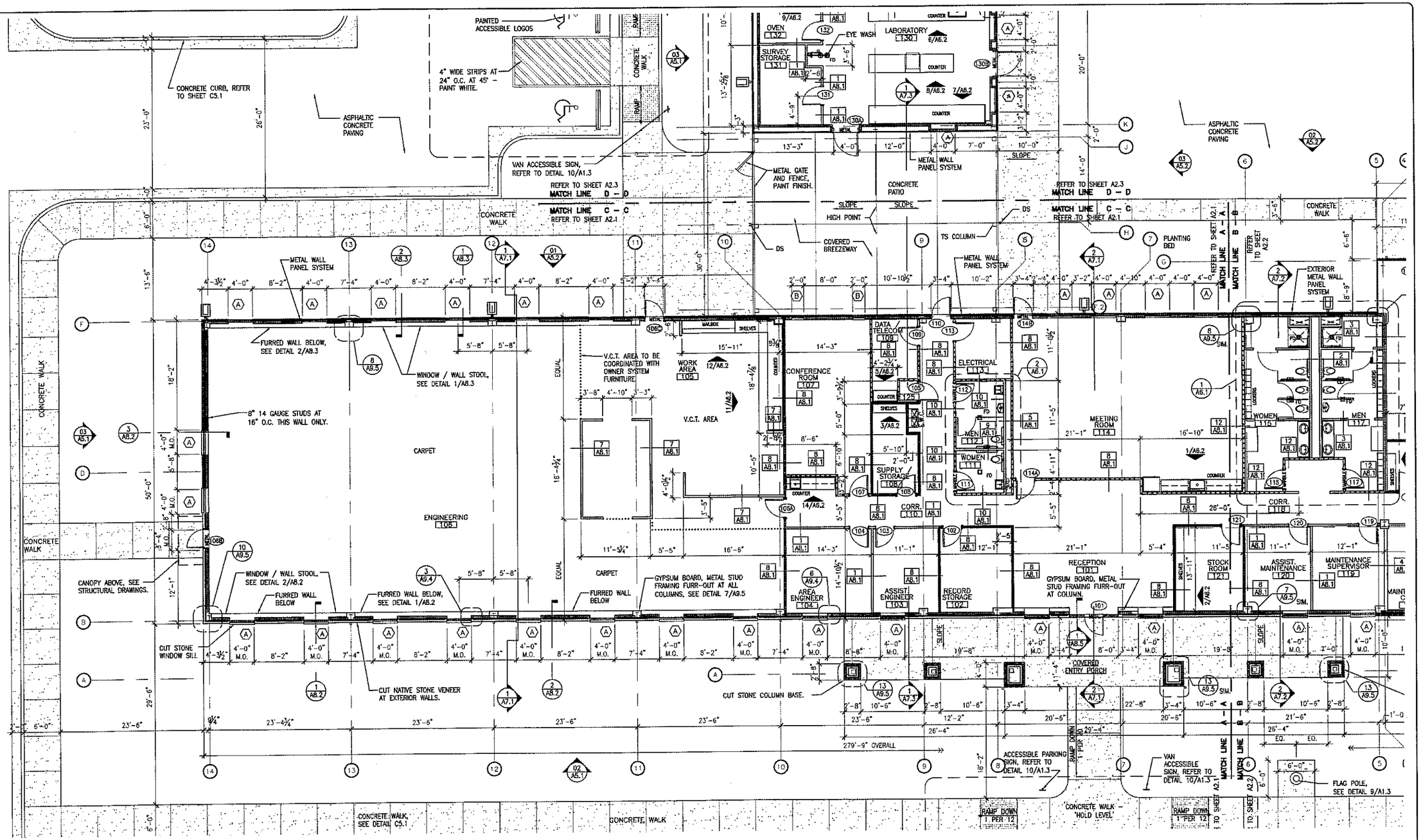

NORTH

PARTIAL NORTH FLOOR PLAN - BUILDING 1

1 SCALE: 1/8" = 1'-0"

GENERAL NOTES:

1. DIMENSIONS ARE FROM FACE OF STUD TO FACE OF STUD.
2. DIMENSIONS ARE FROM FACE OF STUD TO CENTERLINE OF COLUMN.
3. DIMENSIONS ARE FROM FACE OF STUD TO EXTERIOR FACE OF MASONRY OR METAL PANEL.
4. DIMENSIONS OF MASONRY ARE NOMINAL ON PLANS AND ACTUAL OF DETAILS.
5. SEE SHEET G1.1 FOR SYMBOLS DESCRIPTIONS.

WALL PARTITION
WALL PARTITION WITH ACOUSTICAL / BATT INSULATION
WALL PARTITION TO EXTEND TO ROOF DECK ABOVE.
WALL PARTITION - ONE HOUR FIRE RATED PARTITION.

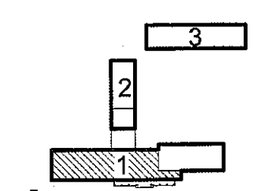

NORTH

KEY PLAN

FLOOR PLAN - BUILDING 1

NOTE: THIS DRAWING WAS CREATED FOR PRODUCTION ON 22" x 34" SHEET SIZE. DO NOT SCALE PRINTS.

Texas Department of Transportation
125 E. 11th Street
Austin, Texas 78701-2483
(512) 416-3049
Copyright © 2005 Texas Department of Transportation

REGISTERED ARCHITECT ROEL BAZAN 14280 STATE OF TEXAS
3/23/05

SOUTH TRAVIS AREA ENGINEER AND MAINTENANCE FACILITY

AUSTIN, TRAVIS COUNTY
AUSTIN DISTRICT 14

Revisions

Drawn by: JOT
Project No. 470400238
Date 03.23.2005
Sheet No.

A2.1
of sheets

CADFILE: T:\ANTFAND14\US470400238\Acad\Arch\0208_A2_1.dwg Plotted: Tue, Mar. 22, 2005 @ 10:05 PM By: JTATE

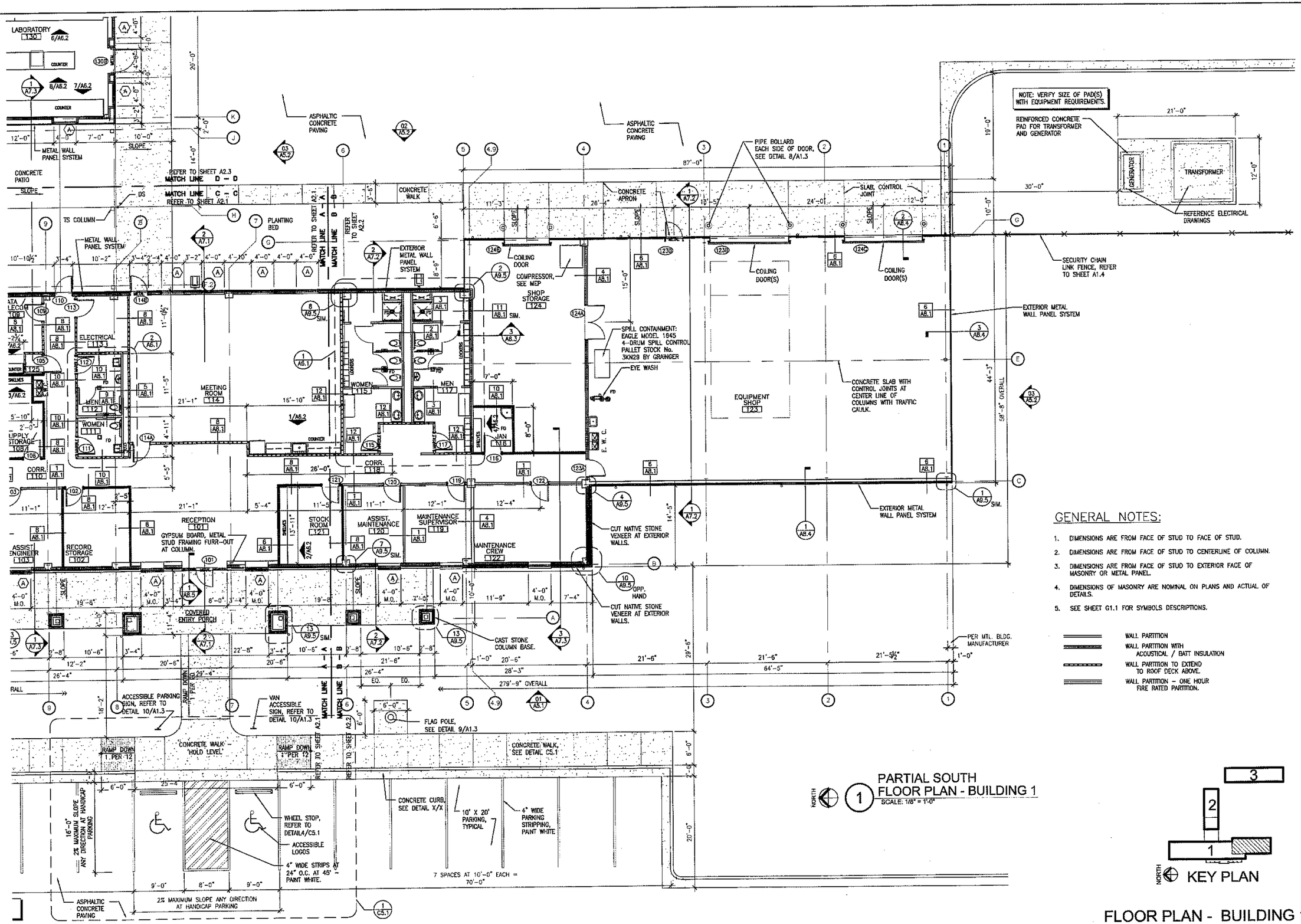

PARTIAL SOUTH FLOOR PLAN - BUILDING 1
SCALE: 1/8" = 1'-0"

GENERAL NOTES:

1. DIMENSIONS ARE FROM FACE OF STUD TO FACE OF STUD.
2. DIMENSIONS ARE FROM FACE OF STUD TO CENTERLINE OF COLUMN.
3. DIMENSIONS ARE FROM FACE OF STUD TO EXTERIOR FACE OF MASONRY OR METAL PANEL.
4. DIMENSIONS OF MASONRY ARE NOMINAL ON PLANS AND ACTUAL OF DETAILS.
5. SEE SHEET G1.1 FOR SYMBOLS DESCRIPTIONS.

- WALL PARTITION
- WALL PARTITION WITH ACOUSTICAL / BATT INSULATION
- WALL PARTITION TO EXTEND TO ROOF DECK ABOVE.
- WALL PARTITION – ONE HOUR FIRE RATED PARTITION.

KEY PLAN

FLOOR PLAN - BUILDING 1

NOTE: THIS DRAWING WAS CREATED FOR PRODUCTION ON 22" x 34" SHEET SIZE. DO NOT SCALE PRINTS.

Texas Department of Transportation
125 E. 11th Street
Austin, Texas 78701-2483
(512) 416-3048

Copyright © 2005 Texas Department of Transportation

REGISTERED ARCHITECT ROEL BAZAN 14289 STATE OF TEXAS
3/23/05

SOUTH TRAVIS AREA ENGINEER AND MAINTENANCE FACILITY
AUSTIN, TRAVIS COUNTY
AUSTIN DISTRICT 14

Revisions

Drawn by: JOT
Project No. 470400238
Date 03.23.2005
Sheet No.

A2.2
of sheets

CADFILE: T:\MNTFND14\US\470400238\Acad\Arch\0238_A2_1.dwg Plotted: Tue, Mar. 22, 2005 @ 10:05 PM By: JTATE

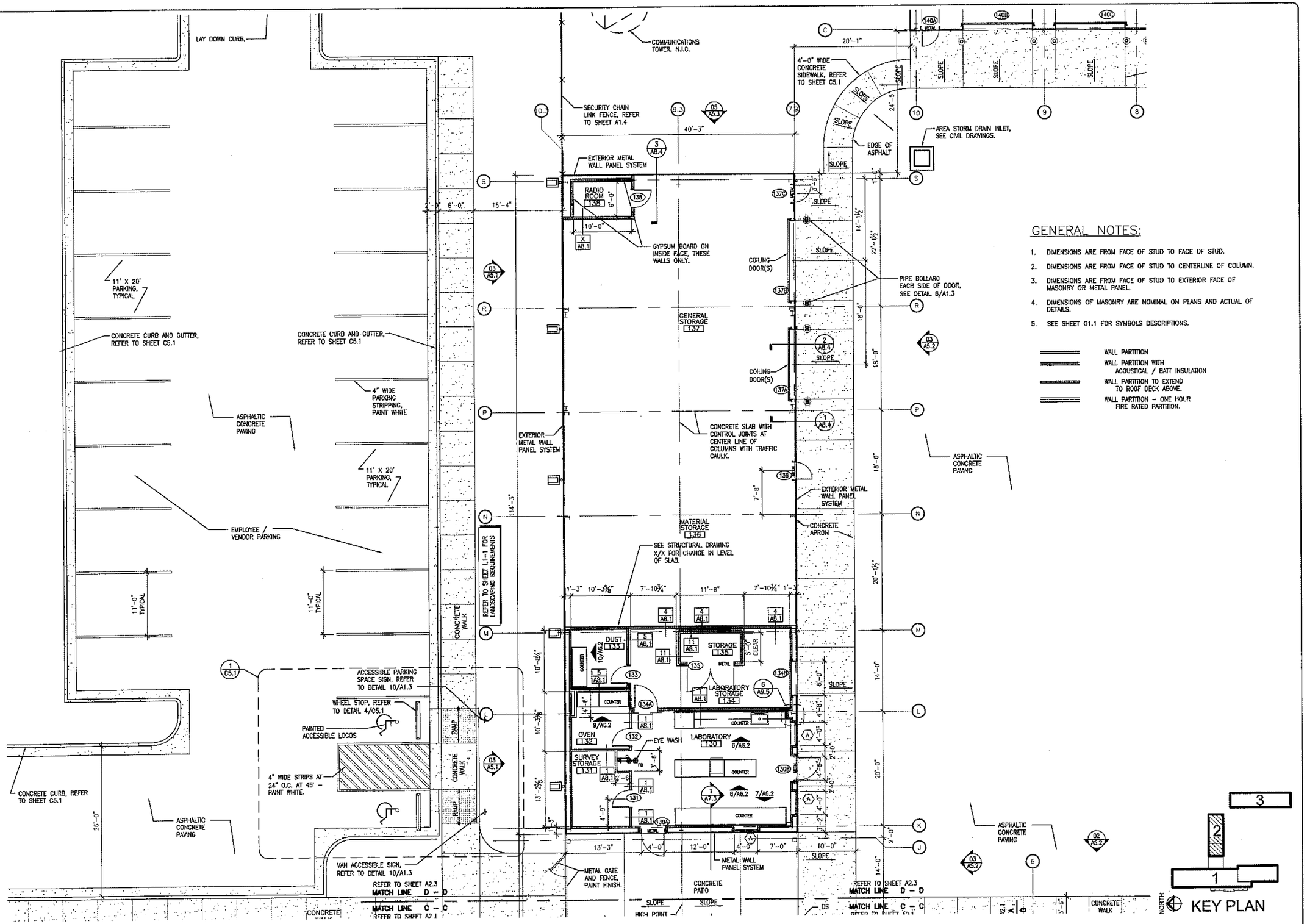

GENERAL NOTES:

1. DIMENSIONS ARE FROM FACE OF STUD TO FACE OF STUD.
2. DIMENSIONS ARE FROM FACE OF STUD TO CENTERLINE OF COLUMN.
3. DIMENSIONS ARE FROM FACE OF STUD TO EXTERIOR FACE OF MASONRY OR METAL PANEL.
4. DIMENSIONS OF MASONRY ARE NOMINAL ON PLANS AND ACTUAL OF DETAILS.
5. SEE SHEET G1.1 FOR SYMBOLS DESCRIPTIONS.

WALL PARTITION
WALL PARTITION WITH ACOUSTICAL / BATT INSULATION
WALL PARTITION TO EXTEND TO ROOF DECK ABOVE.
WALL PARTITION - ONE HOUR FIRE RATED PARTITION.

1 FLOOR PLAN - BUILDING 2
SCALE: 1/8" = 1'-0"

FLOOR PLAN - BUILDING 2

NOTE: THIS DRAWING WAS CREATED FOR PRODUCTION ON 22" x 34" SHEET SIZE. DO NOT SCALE PRINTS.

Texas Department of Transportation
125 E. 11th Street
Austin, Texas 78701-2483
(512) 416-3048
Copyright © 2003 Texas Department of Transportation

REGISTERED ARCHITECT RUEL BAZAN 14289 STATE OF TEXAS 3/23/05

SOUTH TRAVIS AREA ENGINEER AND MAINTENANCE FACILITY
AUSTIN, TRAVIS COUNTY
AUSTIN DISTRICT 14

Revisions

Drawn by: JOT
Project No. 470400238
Date 03.23.2005
Sheet No.
A2.3
of sheets

CADFILE: T:\MNTFRND14\US\470400238\Acad\Arch\0238_A2_1.dwg Plotted: Tue, Mar 22, 2005 @ 4:47 PM By: JTATE

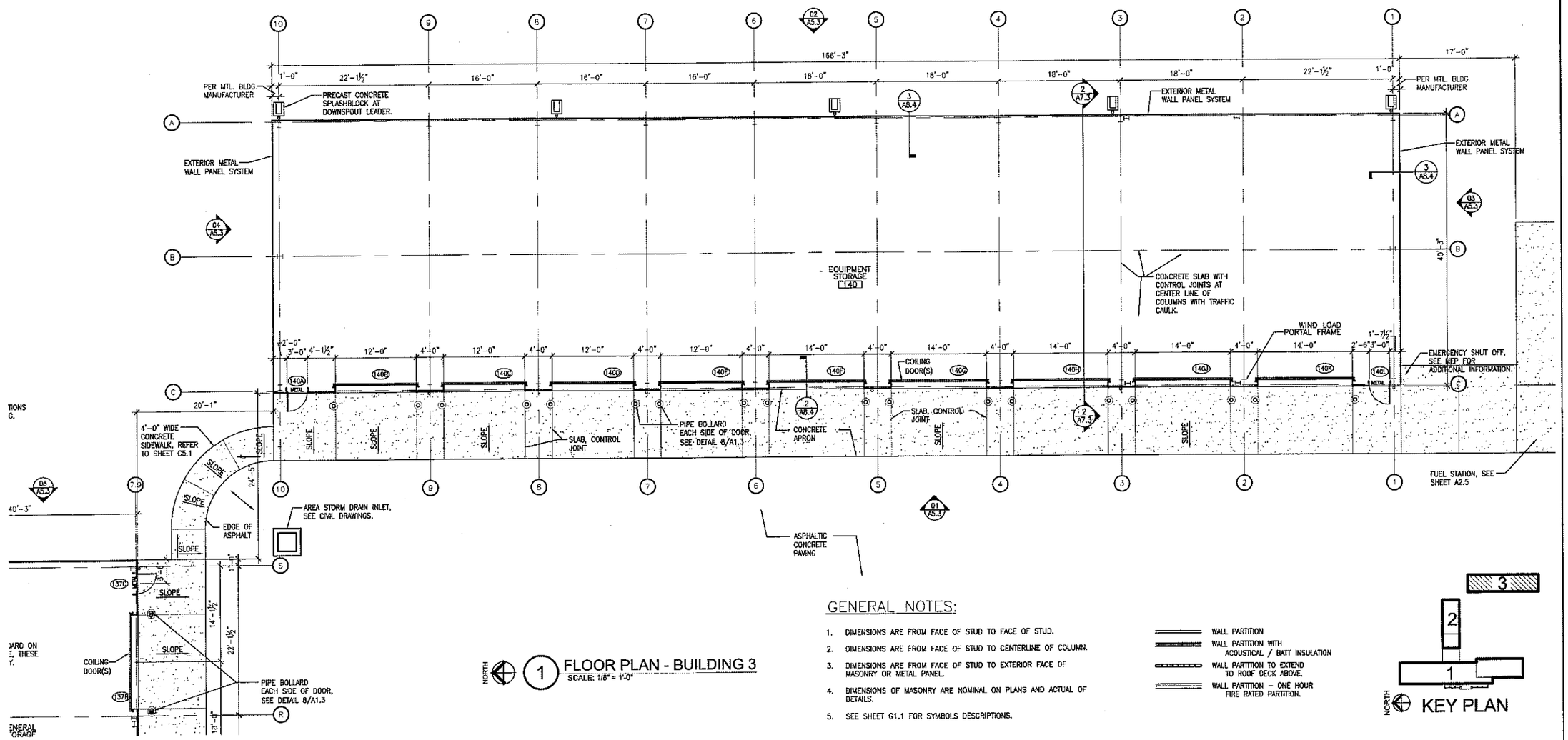

NORTH

1 FLOOR PLAN - BUILDING 3
SCALE: 1/8" = 1'-0"

GENERAL NOTES:

1. DIMENSIONS ARE FROM FACE OF STUD TO FACE OF STUD.
2. DIMENSIONS ARE FROM FACE OF STUD TO CENTERLINE OF COLUMN.
3. DIMENSIONS ARE FROM FACE OF STUD TO EXTERIOR FACE OF MASONRY OR METAL PANEL.
4. DIMENSIONS OF MASONRY ARE NOMINAL ON PLANS AND ACTUAL OF DETAILS.
5. SEE SHEET G1.1 FOR SYMBOLS DESCRIPTIONS.

WALL PARTITION
WALL PARTITION WITH ACOUSTICAL / BATT INSULATION
WALL PARTITION TO EXTEND TO ROOF DECK ABOVE.
WALL PARTITION – ONE HOUR FIRE RATED PARTITION.

KEY PLAN

FLOOR PLAN- BUILDING 3

NOTE: THIS DRAWING WAS CREATED FOR PRODUCTION ON 22" x 34" SHEET SIZE. DO NOT SCALE PRINTS.

Texas Department of Transportation
125 E. 11th Street
Austin, Texas 78701-2483
(512) 416-3048

Copyright © 2005 Texas Department of Transportation

REGISTERED ARCHITECT RUEL BAZAN 14269 STATE OF TEXAS
3/23/05

SOUTH TRAVIS AREA ENGINEER AND MAINTENANCE FACILITY
AUSTIN, TRAVIS COUNTY
AUSTIN DISTRICT 14

Revisions

Drawn by: JOT
Project No. 470400238
Date 03.23.2005
Sheet No.
A2.4
of sheets

CADFILE: T:\MNTFIND14AUS\470400238\Acad\Arch\0238_A2_1.dwg Plotted: Tue, Mar. 22, 2005 @ 5:01 PM By: JTATE

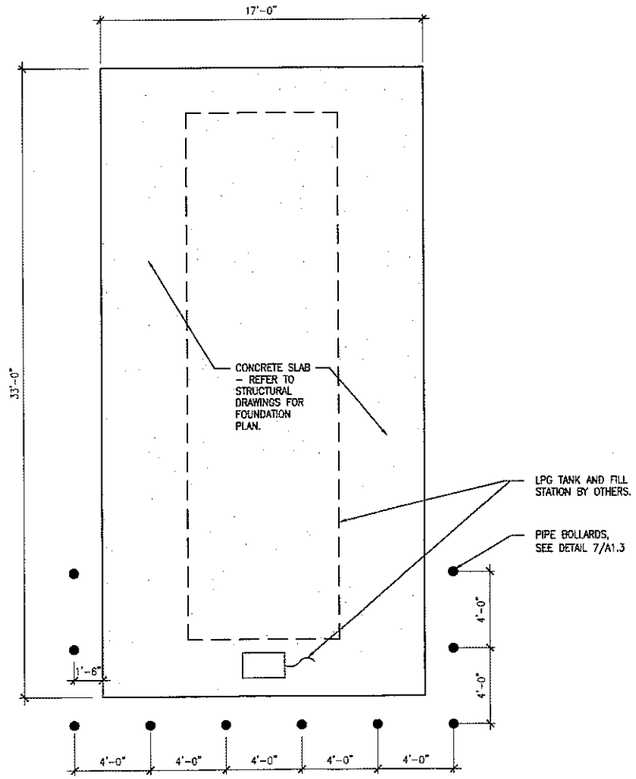

5 PLAN - LPG STORAGE TANKS
SCALE: 1/4" = 1'-0"

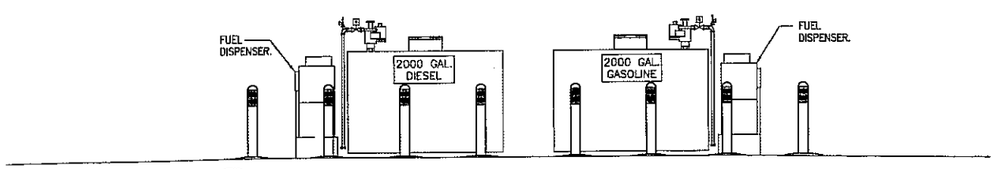

4 ELEVATION
SCALE: 1/4" = 1'-0"

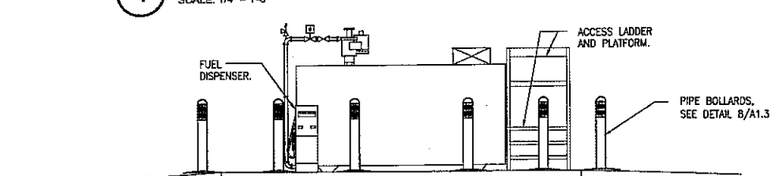

3 ELEVATION
SCALE: 1/4" = 1'-0"

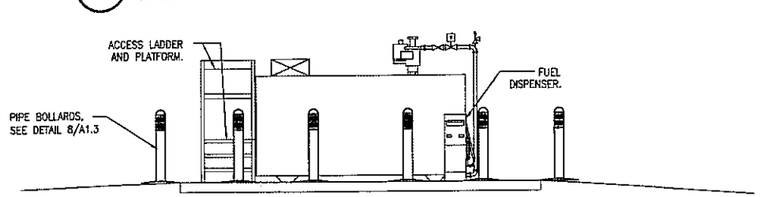

2 ELEVATION
SCALE: 1/4" = 1'-0"

DIMENSIONAL NOTES:

THESE DIMENSIONS SHALL MATCH THE HEIGHT, LENGTH AND WIDTH OF THE ABOVEGROUND STORAGE TANK TO BE INSTALLED.

THESE DIMENSIONS HAVE BEEN DETERMINED AS A FUNCTION OF THE ABOVE GROUND STORAGE TANK HEIGHT. CONTRACTOR SHALL BE RESPONSIBLE FOR MAINTAINING ALL OTHER DIMENSIONS NOT AFFECTED BY TANK HEIGHT, IN CASE A TALLER OR SHORTER TANK IS INSTALLED.

NOTE:

1. SEE M.E.P. DRAWINGS FOR LIGHTING/ELECTRICAL DESIGN.
2. SEE STRUCTURAL DRAWINGS FOR FOUNDATION DESIGN.

SITE PLAN – GENERAL NOTES

1. PRIOR TO COMMENCEMENT OF CONSTRUCTION ACTIVITIES, THE FINAL ABOVEGROUND STORAGE TANK (AST) & LPG TANK LOCATIONS FOR EACH FACILITY SHALL BE SUBMITTED IN SCHEMATIC FORM TO THE TXDOT DISTRICT PETROLEUM STORAGE TANK (PST) COORDINATOR, TXDOT PROJECT MANAGER AND ENGINEER FOR REVIEW AND APPROVAL. CONTRACTOR SHALL SUBMIT CONSTRUCTION SCHEMATICS THAT INCLUDE ACTUAL TANK DIMENSIONS, ACCESS STAIR LENGTHS, AND ALL OTHER DATA THAT WILL AFFECT THE FINAL OVERALL LENGTH AND WIDTH OF THE PROPOSED AST FUELING SYSTEM.

2. THE AST FUELING SYSTEM LOCATION TO BE SUBMITTED SHALL COMPLY WITH ALL THE CLEARANCE REQUIREMENTS AS ESTABLISHED IN THE APPLICABLE CODES FOR ABOVE GROUND STORAGE TANK FUELING SYSTEMS.

3. THE CONTRACTOR SHALL BE RESPONSIBLE FOR FIELD VERIFYING BOTH HORIZONTAL AND VERTICAL LOCATIONS OF UTILITIES AND MARKING THEIR LOCATIONS BEFORE COMMENCING EXCAVATION OR UNDERGROUND OPERATIONS. ANY DAMAGE TO UTILITIES CAUSED BY THE CONTRACTOR SHALL BE REPAIRED BY THE CONTRACTOR AT NO ADDITIONAL EXPENSE TO THE TEXAS DEPARTMENT OF TRANSPORTATION (TXDOT).

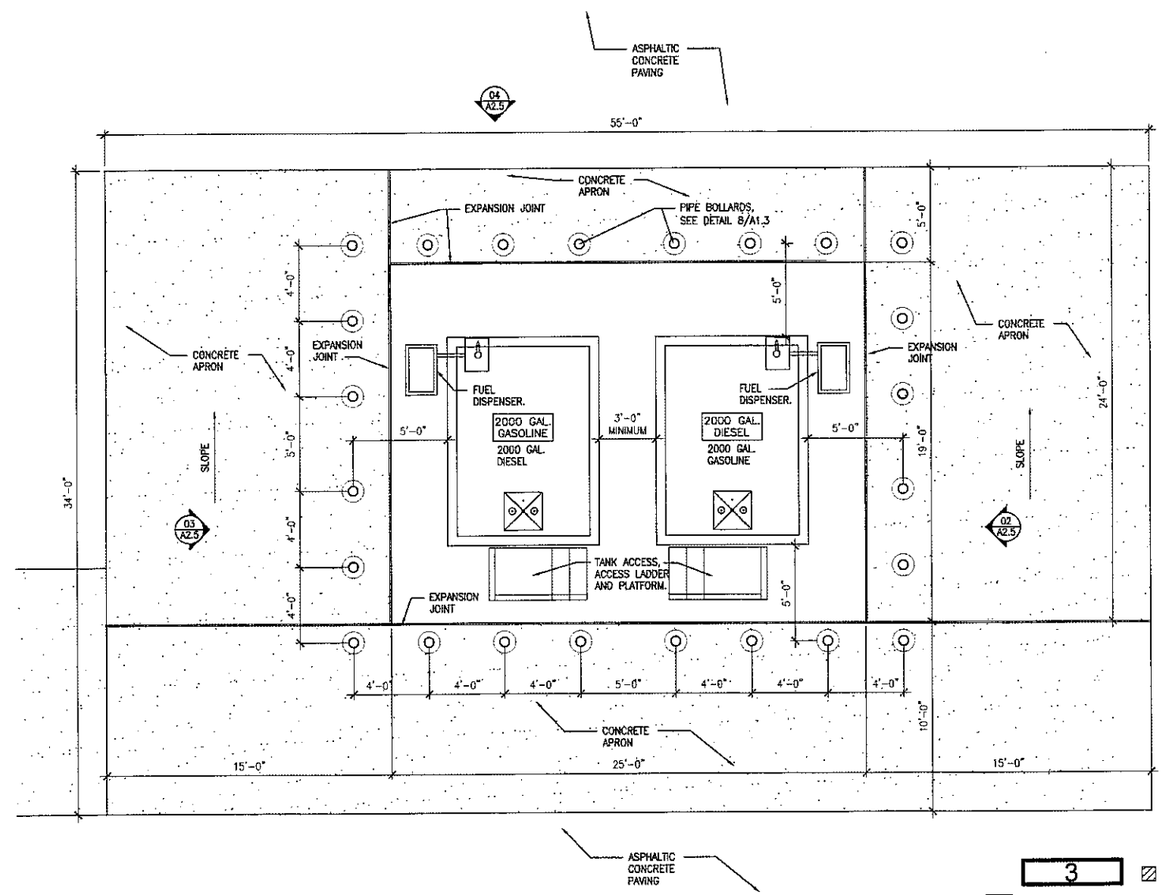

1 PLAN - ABOVE GROUND STORAGE TANKS
SCALE: 1/4" = 1'-0"

NORTH

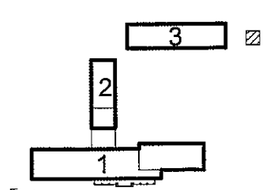

KEY PLAN

FUEL STATION / LPG PLANS & DETAILS

NOTE: THIS DRAWING WAS CREATED FOR PRODUCTION ON 22" x 34" SHEET SIZE. DO NOT SCALE PRINTS.

Texas Department of Transportation
125 E. 11th Street
Austin, Texas 78701-2483
(512) 416-3048
Copyright © 2005 Texas Department of Transportation

REGISTERED ARCHITECT ROEL BAZAN 14289 STATE OF TEXAS
3/23/05

SOUTH TRAVIS AREA ENGINEER AND MAINTENANCE FACILITY
AUSTIN, TRAVIS COUNTY
AUSTIN DISTRICT 14

Revisions

Drawn by: JOT
Project No. 470400238
Date 03.23.2005
Sheet No.
A2.5
of sheets

CADFILE: T:\MNTFAID14AUS\470400238\cadArch\0238_A2_5.dwg Plotted: Tue, Mar. 22, 2005 @ 12:45 PM By: JTATE

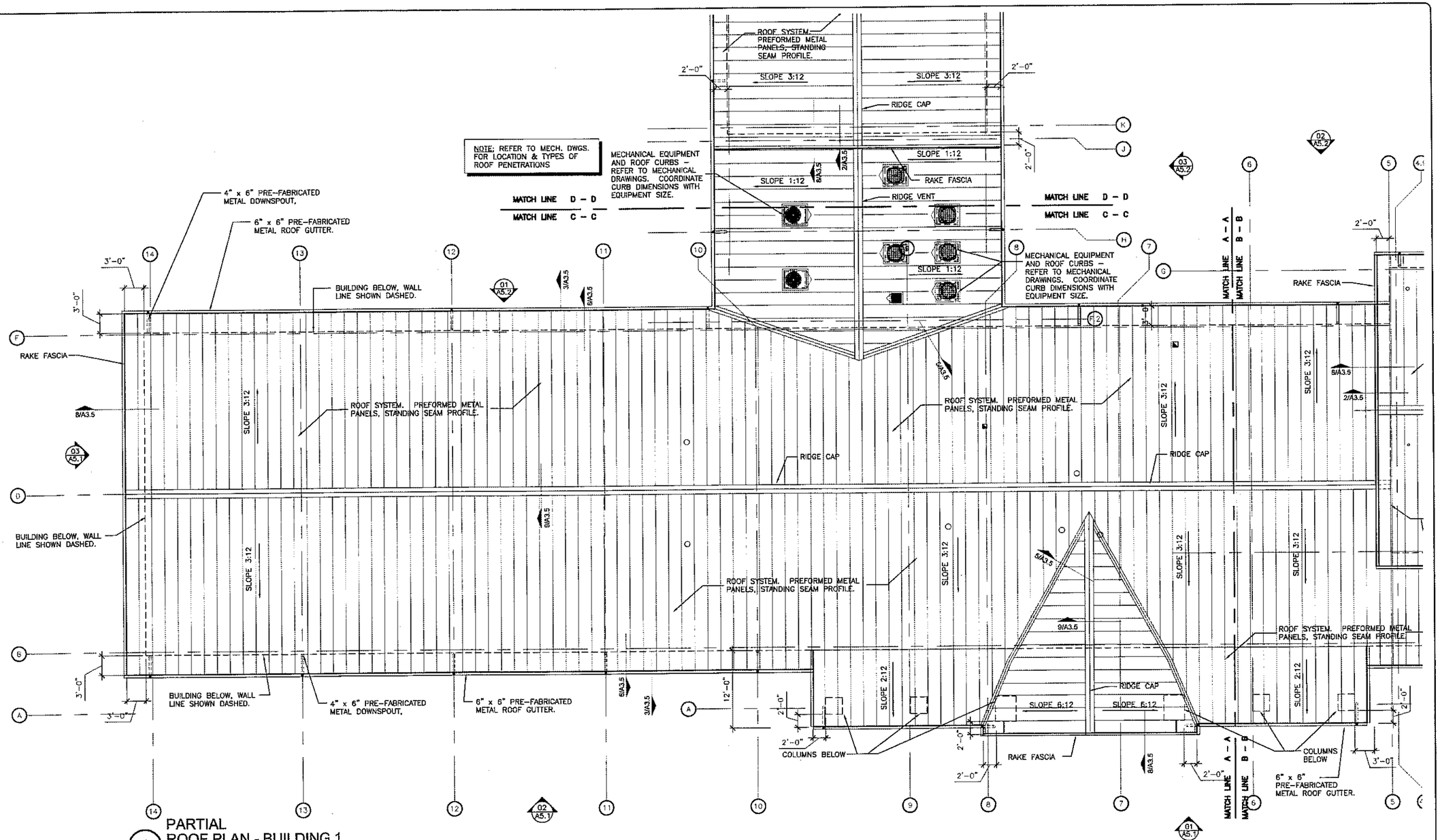

1 PARTIAL ROOF PLAN - BUILDING 1
SCALE: 1/8" = 1'-0"

NOTE: VENTS THRU ROOF ARE FOR ARCH. AND MEP COORDINATION. CONTRACTOR SHALL VERIFY LOCATION & QUANTITY W/ MECHANICAL CONTRACTOR

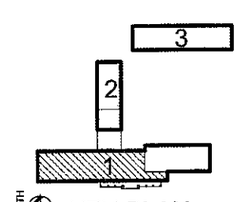

KEY PLAN

ROOF PLAN - BUILDING 1

NOTE: THIS DRAWING WAS CREATED FOR PRODUCTION ON 22" x 34" SHEET SIZE. DO NOT SCALE PRINTS.

Texas Department of Transportation
125 E. 11th Street
Austin, Texas 78701-2483
(512) 416-3048
Copyright © 2005 Texas Department of Transportation

REGISTERED ARCHITECT ROEL BAZAN 14259 STATE OF TEXAS 3/23/05

SOUTH TRAVIS AREA ENGINEER AND MAINTENANCE FACILITY
AUSTIN, TRAVIS COUNTY
AUSTIN DISTRICT 14

Revisions

Drawn by: JOT
Project No. 470400238
Date 03.23.2005
Sheet No.
A3.1
of sheets

CADFILE: T:\WTFMD14\AUS470400238\Acad\Arch\0238_A3_1.dwg Plotted: Tue, Mar 22, 2005 @ 5:07 PM By: JTATE

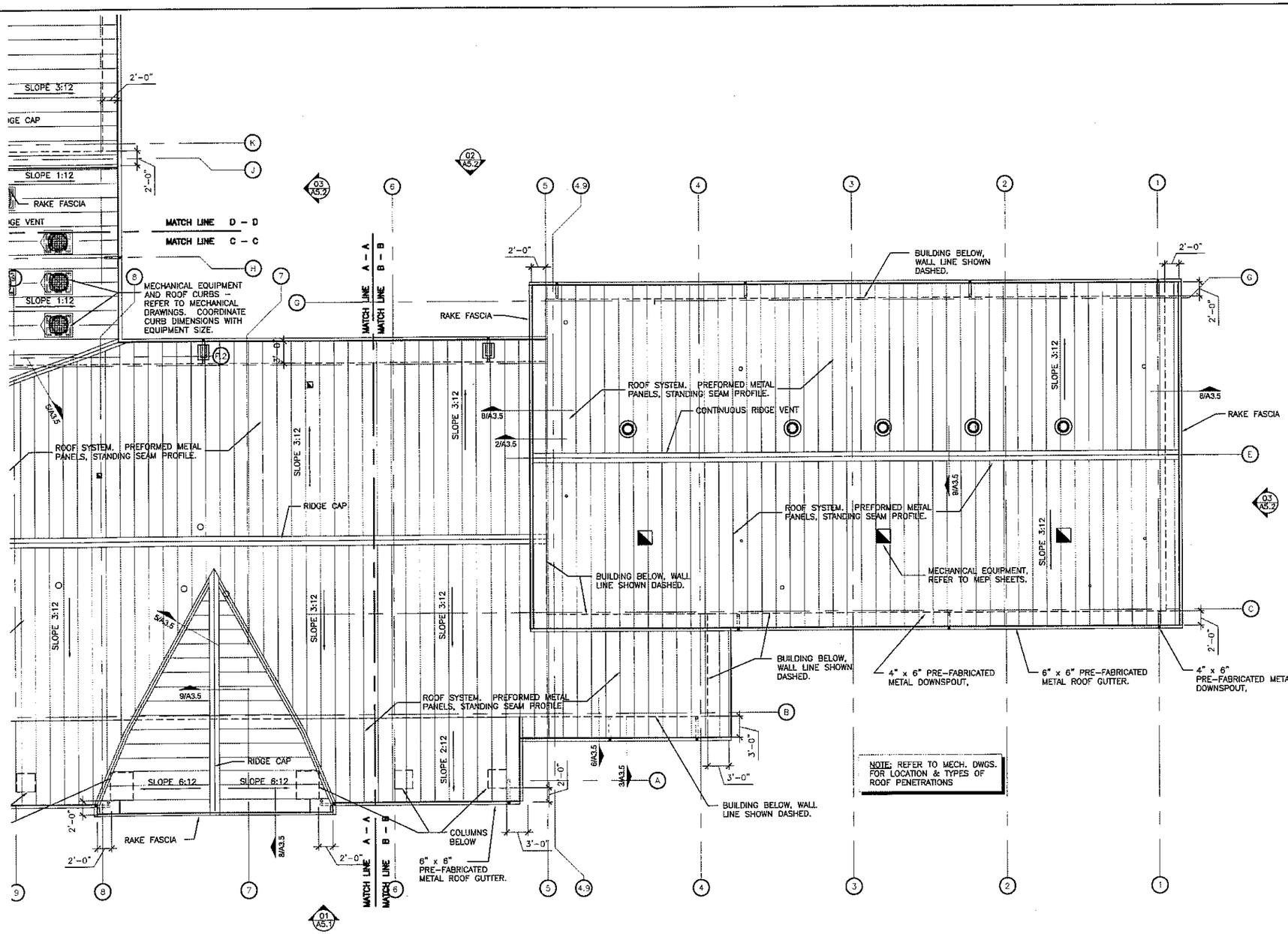

1 PARTIAL ROOF PLAN - BUILDING 1
SCALE: 1/8" = 1'-0"

NOTE: VENTS THRU ROOF ARE FOR ARCH. AND MEP COORDINATION. CONTRACTOR SHALL VERIFY LOCATION & QUANTITY W/ MECHANICAL CONTRACTOR

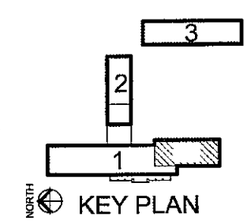

KEY PLAN

ROOF PLAN - BUILDING 1

NOTE: THIS DRAWING WAS CREATED FOR PRODUCTION ON 22" x 34" SHEET SIZE. DO NOT SCALE PRINTS.

Texas Department of Transportation
125 E. 11th Street
Austin, Texas 78701-2483
(512) 416-3848
Copyright © 2005 Texas Department of Transportation

REGISTERED ARCHITECT JOEL BAZAN 14289 STATE OF TEXAS 3/23/05

SOUTH TRAVIS AREA ENGINEER AND MAINTENANCE FACILITY
AUSTIN, TRAVIS COUNTY
AUSTIN DISTRICT 14

Revisions

Drawn by: JOT
Project No. 470400238
Date 03.23.2005
Sheet No.

A3.2
of sheets

CADFILE: T:\MNTFIM\D14AUS\470400239\acad\arch\0238_A3_1.dwg Plotted: Tue, Mar. 22, 2005 @ 10:04 PM By: JTATE

NOTE: REFER TO MECH. DWGS. FOR LOCATION & TYPES OF ROOF PENETRATIONS

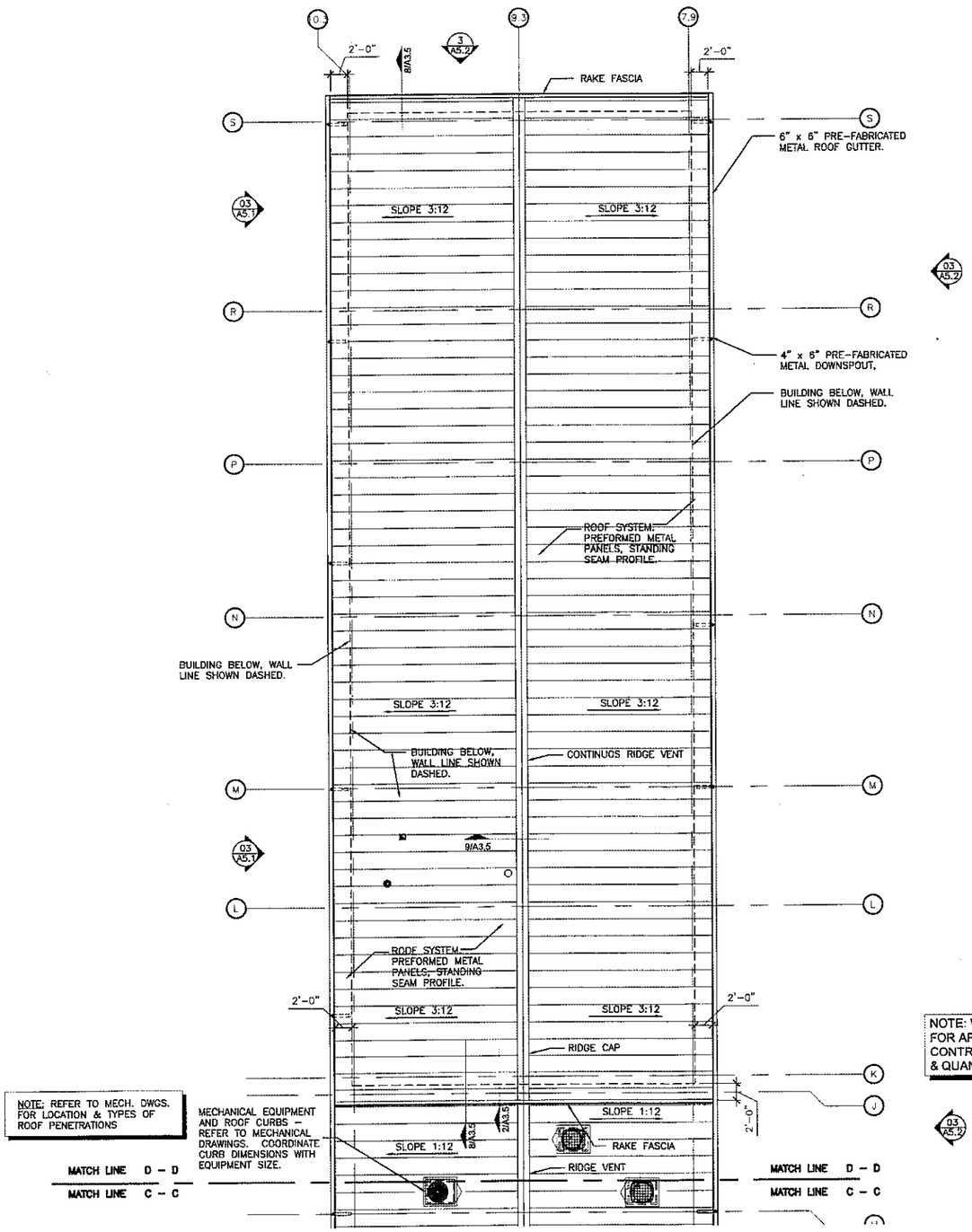

NOTE: REFER TO MECH. DWGS. FOR LOCATION & TYPES OF ROOF PENETRATIONS

MECHANICAL EQUIPMENT AND ROOF CURBS – REFER TO MECHANICAL DRAWINGS. COORDINATE CURB DIMENSIONS WITH EQUIPMENT SIZE.

NOTE: VENTS THRU ROOF ARE FOR ARCH. AND MEP COORDINATION. CONTRACTOR SHALL VERIFY LOCATION & QUANTITY W/ MECHANICAL CONTRACTOR

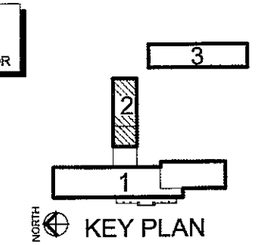

KEY PLAN

1 ROOF PLAN - BUILDING 2
SCALE: 1/8" = 1'-0"

ROOF PLAN - BUILDING 2

NOTE: THIS DRAWING WAS CREATED FOR PRODUCTION 22"x 34" SHEET SIZE. DO NOT SCALE PRINTS.

Texas Department of Transportation
125 E. 11th Street
Austin, Texas 78701-2483
(512) 416-3048

Copyright © 2005 Texas Department of Transportation

REGISTERED ARCHITECT ROEL BAZAN 14289 STATE OF TEXAS
3/25/05

SOUTH TRAVIS AREA ENGINEER AND MAINTENANCE FACILITY
AUSTIN, TRAVIS COUNTY
AUSTIN DISTRICT 14

Revisions

Drawn by: JOT
Project No. 470400238
Date 03.23.2005
Sheet No.
A3.3
of sheets

CADFILE: T:\WINTFRM01\AUS\470400238\Acad\Arch\0238_A3_1.dwg Plotted: Tue, Mar. 22, 2005 @ 10:04 PM By: JTAYE

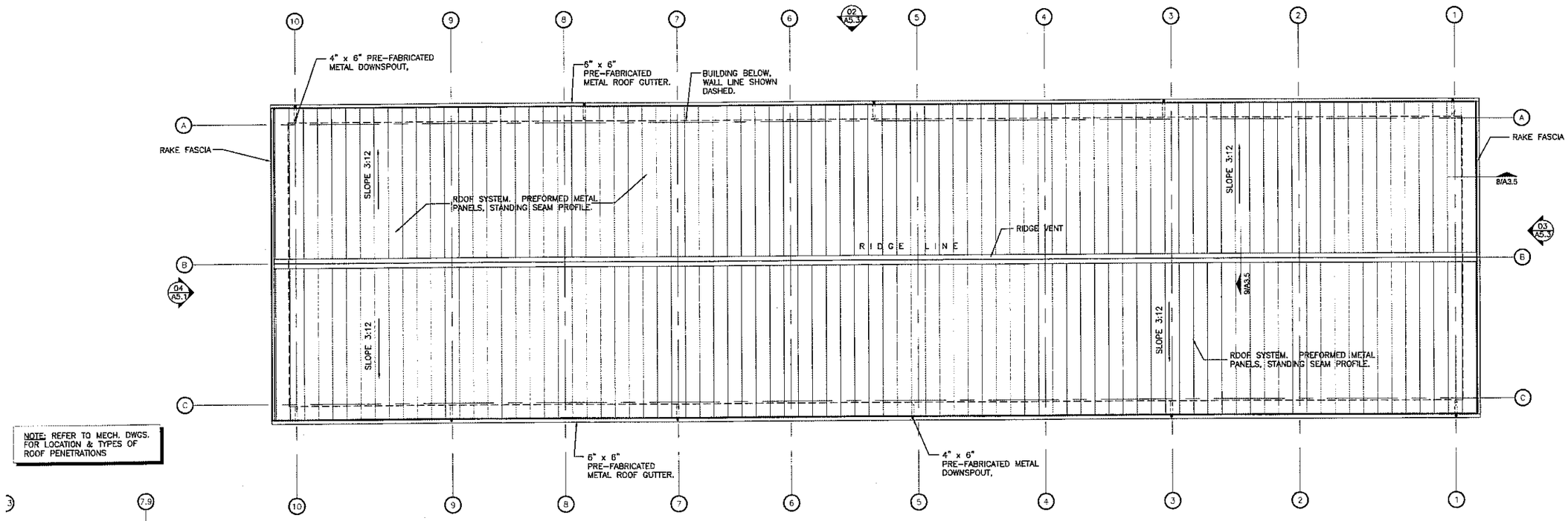

NOTE: REFER TO MECH. DWGS. FOR LOCATION & TYPES OF ROOF PENETRATIONS

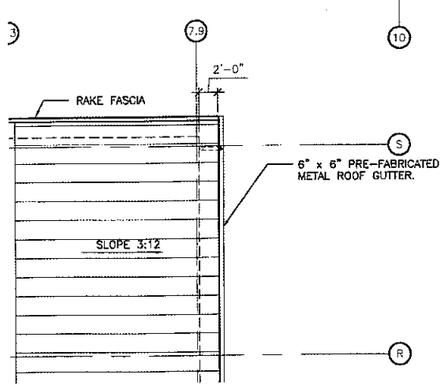

1 ROOF PLAN - BUILDING 3
SCALE: 1/8" = 1'-0"

NOTE: VENTS THRU ROOF ARE FOR ARCH. AND MEP COORDINATION. CONTRACTOR SHALL VERIFY LOCATION & QUANTITY W/ MECHANICAL CONTRACTOR

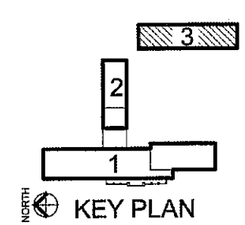

KEY PLAN

ROOF PLAN-BLDG. #3

Texas Department of Transportation
125 E. 11th Street
Austin, Texas 78701-2483
(512) 416-3948
Copyright © 2005 Texas Department of Transportation

REGISTERED ARCHITECT ROEL BAZAN 14289 STATE OF TEXAS 3/23/05

SOUTH TRAVIS AREA ENGINEER AND MAINTENANCE FACILITY
AUSTIN, TRAVIS COUNTY
AUSTIN DISTRICT 14

Revisions

Drawn by: JOT
Project No. 470400238
Date 03.23.2005
Sheet No. A3.4
of sheets

CADFILE: T:\ANTFHUD14\AUS470400238\Acad\Arch\0238_A3_1.dwg Plotted: Tue, Mar 22, 2006 @ 5:58 PM By: JTATE

NOTE: THIS DRAWING WAS CREATED FOR PRODUCTION 22"x 34" SHEET SIZE. DO NOT SCALE PRINTS.

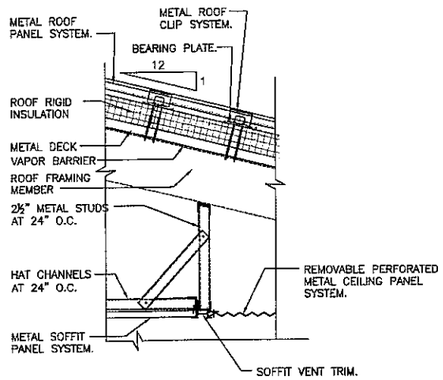

12 SECTION AT REMOVABLE PANEL
SCALE: N.T.S.

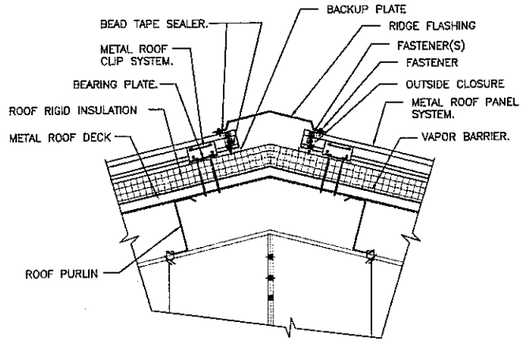

9 SECTION DETAIL AT ROOF RIDGE
SCALE: N.T.S.

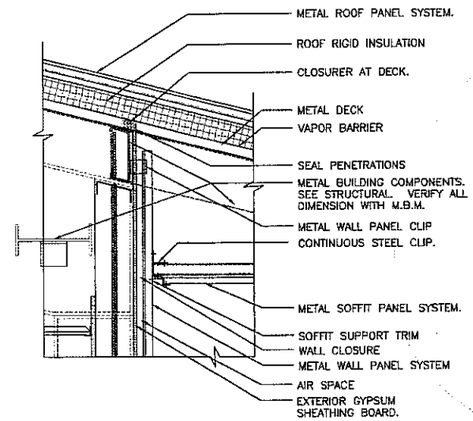

6 SECTION DETAIL AT SOFFIT
SCALE: N.T.S.

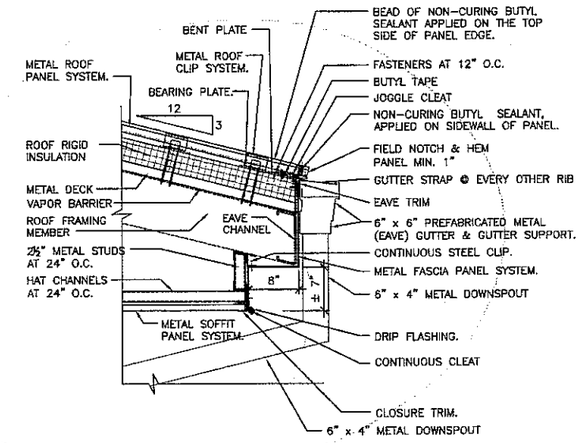

3 SECTION DETAIL AT ROOF EAVE
SCALE: N.T.S.

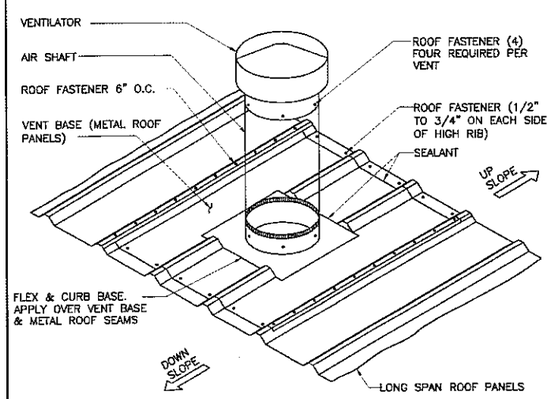

11 VTR (VENT THROUGH ROOF) DETAIL
SCALE: N.T.S.

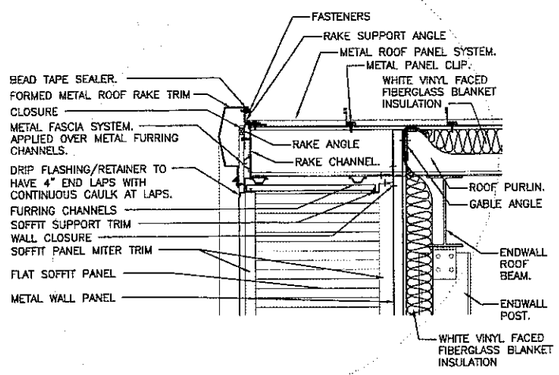

8 SECTION DETAIL AT END OF BUILDING
SCALE: N.T.S.

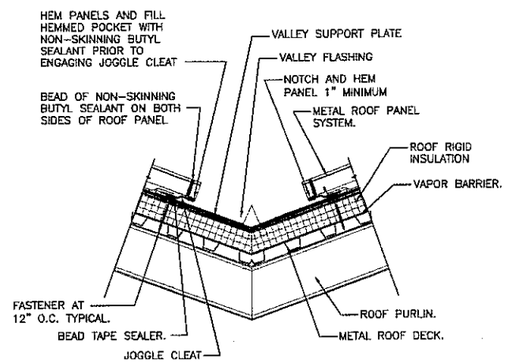

5 SECTION DETAIL AT ROOF VALLEY
SCALE: N.T.S.

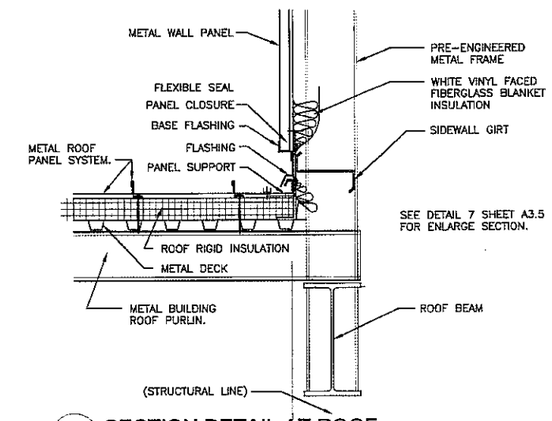

2 SECTION DETAIL AT ROOF
SCALE: N.T.S.

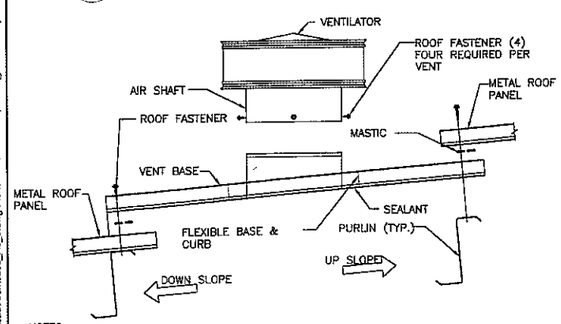

NOTES:
1. INSTALL VENT ACCORDING TO MANUFACTURERS RECOMMENDED INSTALLATION PROCEDURES.
2. SEAL ALL CONNECTIONS WITH GUTTER SEAL TO INSURE WEATHER TIGHTNESS.
3. TAPE MASTIC SIZE SHALL BE THE SAME AS FURNISHED FOR ROOF PANELS.

10 VTR (VENT THROUGH ROOF) SECTION
SCALE: N.T.S.

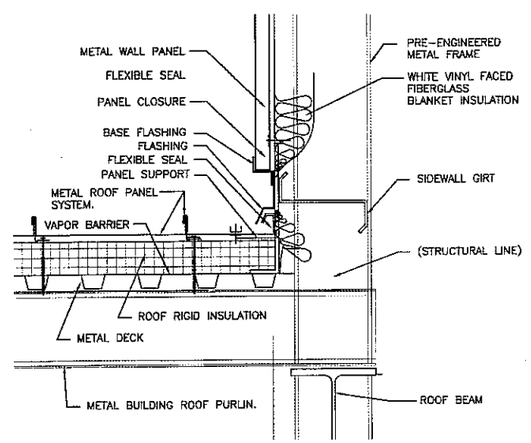

7 ENLARGED DETAIL
SCALE: N.T.S.

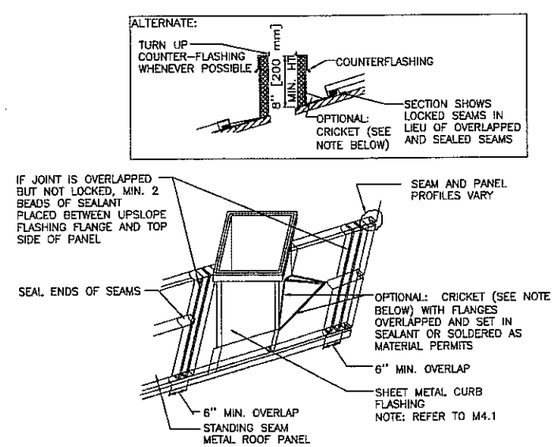

4 CURB DETAIL
SCALE: N.T.S.

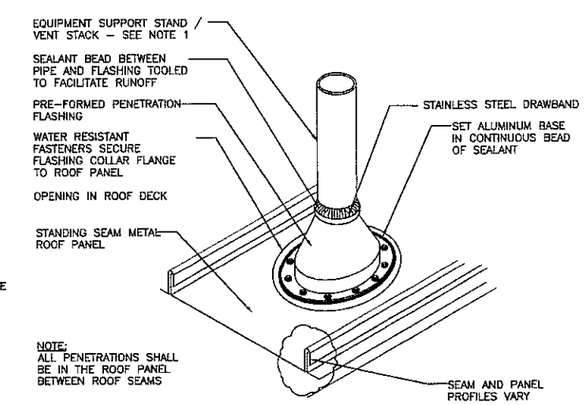

1 VTR (VENT THROUGH ROOF) DETAIL
SCALE: N.T.S.

ROOF DETAILS

NOTE: THIS DRAWING WAS CREATED FOR PRODUCTION ON 22" x 34" SHEET SIZE. DO NOT SCALE PRINTS.

Texas Department of Transportation
125 E. 11th Street
Austin, Texas 78701-2483
(512) 416-3048
Copyright © 2005 Texas Department of Transportation

REGISTERED ARCHITECT ROEL BAZAN 14258 STATE OF TEXAS
3/23/05

SOUTH TRAVIS AREA ENGINEER AND MAINTENANCE FACILITY
AUSTIN, TRAVIS COUNTY
AUSTIN DISTRICT 14

Revisions

Drawn by: JOT
Project No. 470400238
Date 03.23.2005
Sheet No.
A3.5
of sheets

CADFILE: T:\MNTFMID14\AUS\470400238\Acad\Arch\0238_A3_5.dwg Plotted: Wed, Mar. 23, 2005 @ 4:37 PM By: JTATE

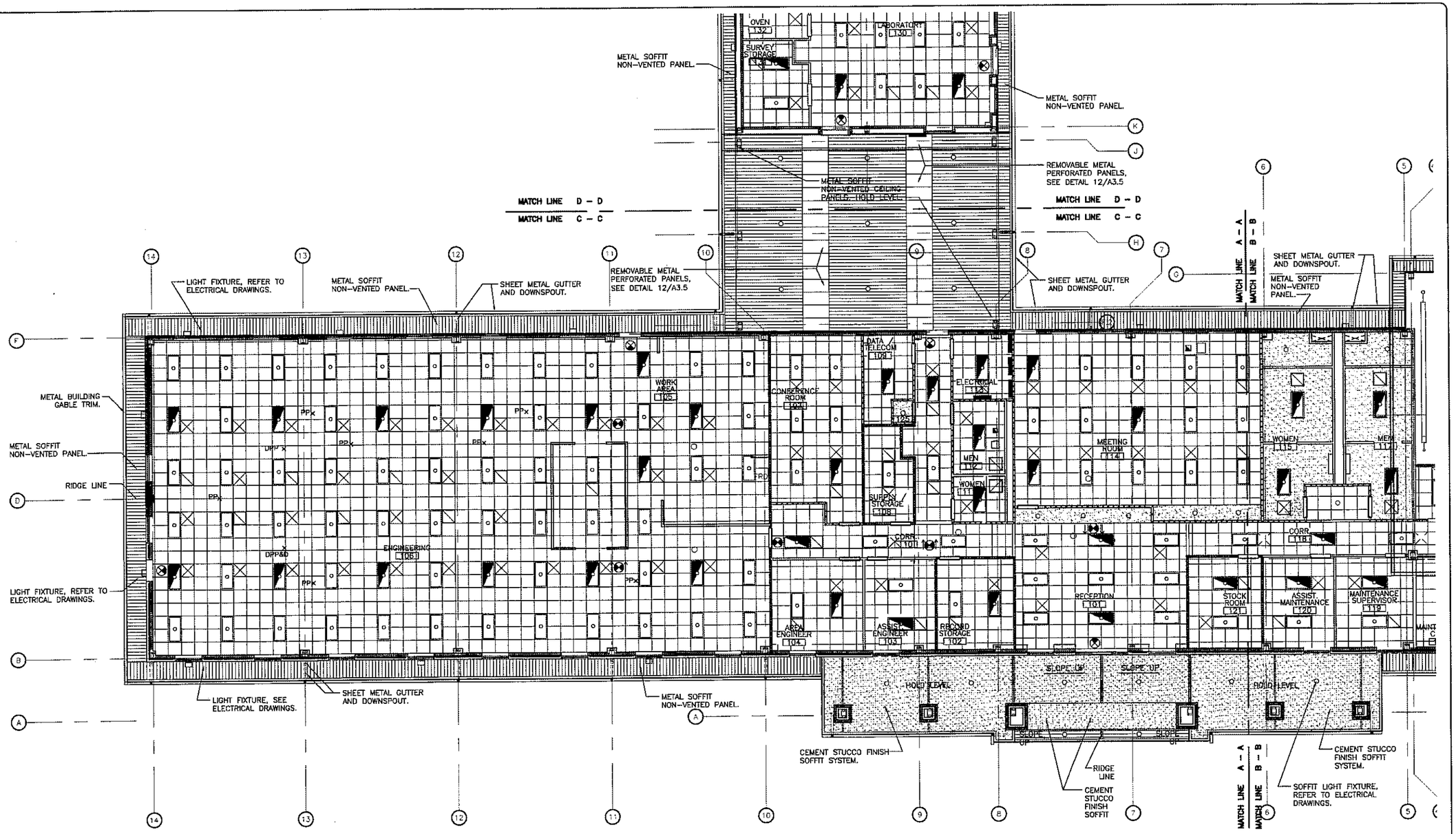

LEGEND

- 2' X 2' SUSPENDED ACOUSTICAL CEILING GRID
- RETURN AIR DIFFUSER
- SUPPLY AIR DIFFUSER
- LIGHT FIXTURE REF: ELEC.
- EMERGENCY LIGHT FIXTURE REF: ELEC.
- METAL PANEL SOFFIT
- RECESSED LIGHT FIXTURE
- LIGHT FIXTURE REF: ELEC.
- LIGHT FIXTURE REF: ELEC.
- EXHAUST FAN
- EXIT LIGHT
- LIGHT FIXTURE REF: ELEC.
- GYPSUM BOARD CEILING
- CEMENT PLASTER STUCCO

NORTH

1 PARTITIAL REFLECTED CEILING PLAN - BUILDING 1

SCALE: 1/8" = 1'-0"

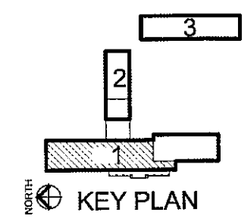

KEY PLAN

REFLECTED CEILING PLAN-BLDG. #1

NOTE: THIS DRAWING WAS CREATED FOR PRODUCTION ON 22" x 34" SHEET SIZE. DO NOT SCALE PRINTS.

Texas Department of Transportation
125 E. 11th Street
Austin, Texas 78701-2483
(512) 416-3048
Copyright © 2005 Texas Department of Transportation

REGISTERED ARCHITECT MOEL BAZAN 14289 STATE OF TEXAS 3/23/05

SOUTH TRAVIS AREA ENGINEER AND MAINTENANCE FACILITY

AUSTIN, TRAVIS COUNTY
AUSTIN DISTRICT 14

Revisions

Drawn by: JOT
Project No. 470400238
Date 03.23.2005
Sheet No.

A4.1
of sheets

CADFILE: T:\MNTFMAD14AUS470400238\Acad\Archi\0238_A4_1.dwg Plotted: Tue, Mar. 22, 2005 @ 5:47 PM By: JTATE

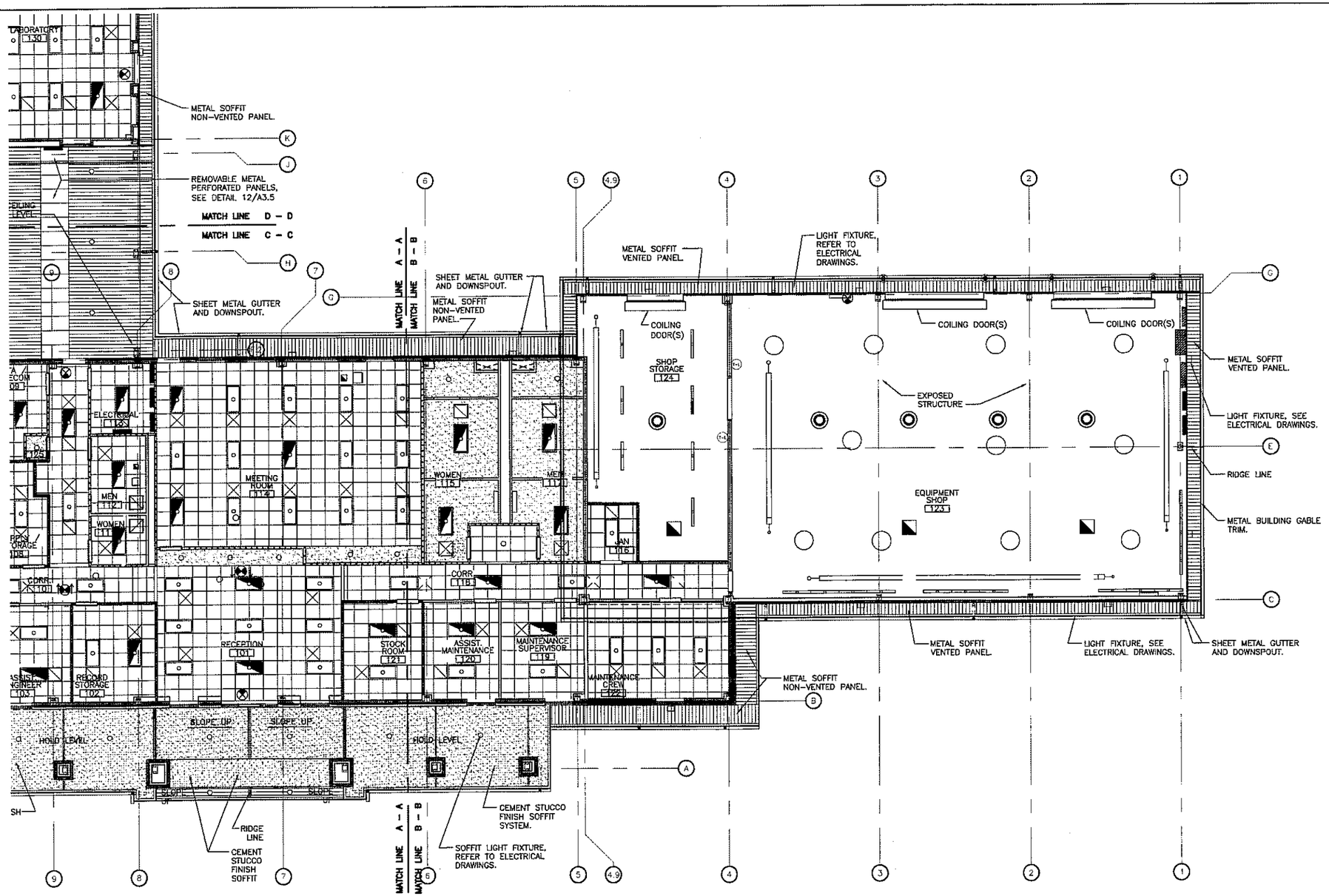

LEGEND

- 2' X 2' SUSPENDED ACOUSTICAL CEILING GRID
- RETURN AIR DIFFUSER
- SUPPLY AIR DIFFUSER
- LIGHT FIXTURE REF: ELEC.
- EMERGENCY LIGHT FIXTURE REF: ELEC.
- METAL PANEL SOFFIT
- RECESSED LIGHT FIXTURE
- LIGHT FIXTURE REF: ELEC.
- LIGHT FIXTURE REF: ELEC.
- EXHAUST FAN
- EXIT LIGHT
- LIGHT FIXTURE REF: ELEC.
- GYPSUM BOARD CEILING
- CEMENT PLASTER STUCCO

NORTH 1 PARTITIAL REFLECTED CEILING PLAN - BUILDING 1
SCALE: 1/8" = 1'-0"

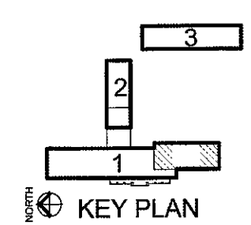

KEY PLAN

REFLECTED CEILING PLAN-BLDG. #1

NOTE: THIS DRAWING WAS CREATED FOR PRODUCTION ON 22" x 34" SHEET SIZE. DO NOT SCALE PRINTS.

Texas Department of Transportation
125 E. 11th Street
Austin, Texas 78701-2483
(512) 416-3948
Copyright © 2005 Texas Department of Transportation

REGISTERED ARCHITECT ROEL BAZAN 14289 STATE OF TEXAS
3/23/05

SOUTH TRAVIS AREA ENGINEER AND MAINTENANCE FACILITY
AUSTIN, TRAVIS COUNTY
AUSTIN DISTRICT 14

Revisions

Drawn by: JOT
Project No. 470400238
Date 03.23.2005
Sheet No.

A4.2
of sheets

CADFILE: T:\INTFMD1\AUS\470400238\Acad\Arch\0238_A4_1.dwg Plotted: Tue, Mar 22, 2005 @ 5:59 PM By: JTATE

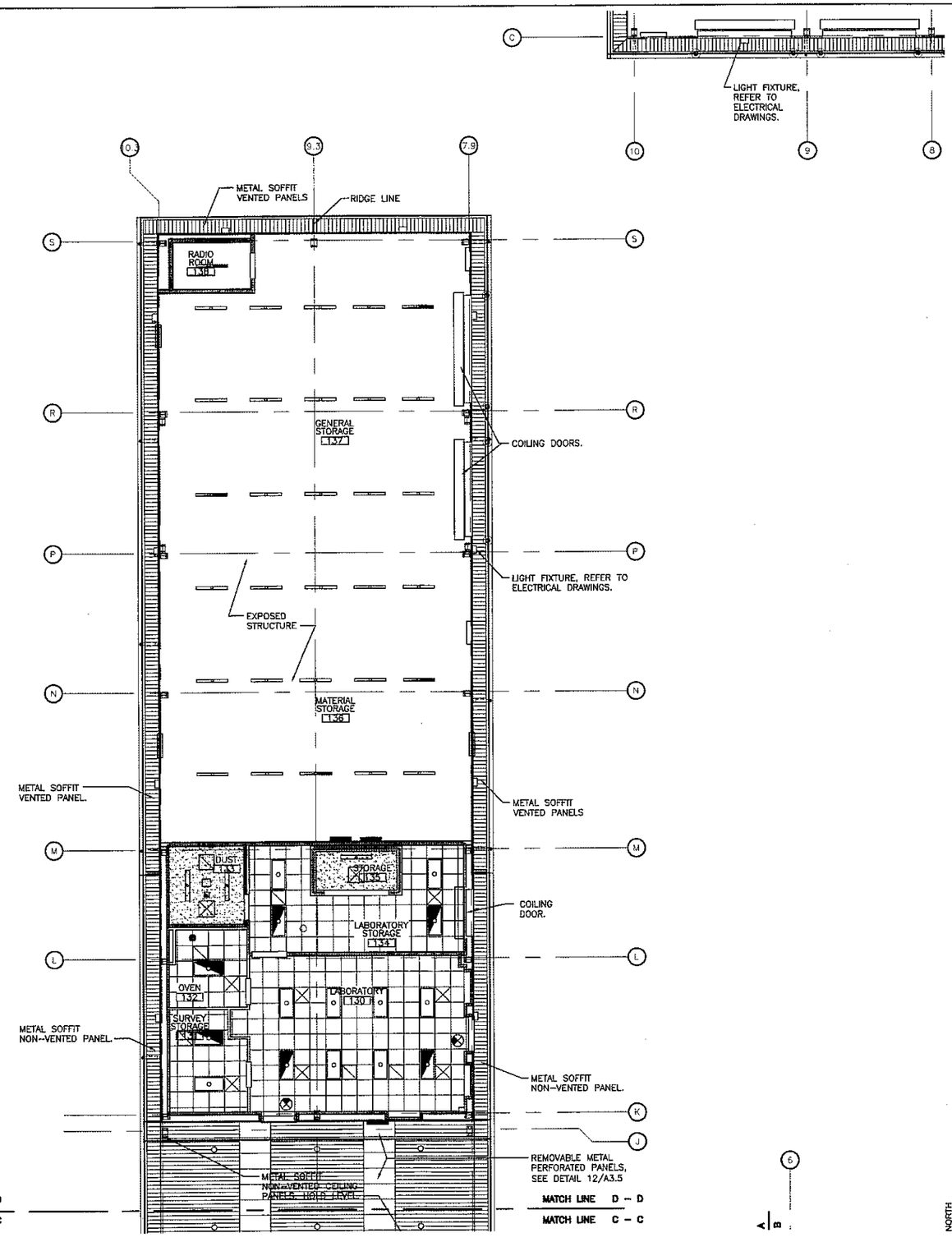

1 REFLECTED CEILING PLAN - BUILDING 2
SCALE: 1/8" = 1'-0"

LEGEND

- 2' X 2' SUSPENDED ACOUSTICAL CEILING GRID
- RETURN AIR DIFFUSER
- SUPPLY AIR DIFFUSER
- LIGHT FIXTURE REF: ELEC.
- EMERGENCY LIGHT FIXTURE REF: ELEC.
- METAL PANEL SOFFIT
- RECESSED LIGHT FIXTURE
- LIGHT FIXTURE REF: ELEC.
- LIGHT FIXTURE REF: ELEC.
- EXHAUST FAN
- EXIT LIGHT
- LIGHT FIXTURE REF: ELEC.
- GYPSUM BOARD CEILING
- CEMENT PLASTER STUCCO

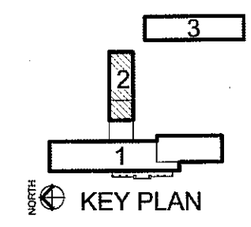

KEY PLAN

REFLECTED CEILING PLAN-BLDG. #2

NOTE: THIS DRAWING WAS CREATED FOR PRODUCTION 22"x 34" SHEET SIZE. DO NOT SCALE PRINTS.

Texas Department of Transportation
125 E. 11th Street
Austin, Texas 78701-2483
(512) 416-3048
Copyright © 2005 Texas Department of Transportation

REGISTERED ARCHITECT MOEL BAZAN 14259 STATE OF TEXAS
3/23/05

SOUTH TRAVIS AREA ENGINEER AND MAINTENANCE FACILITY
AUSTIN, TRAVIS COUNTY
AUSTIN DISTRICT 14

Revisions

Drawn by: JOT
Project No. 470400238
Date 03.23.2005
Sheet No.
A4.3
of sheets

CADFILE: T:\INTFMD14\US470400238\Arch\0238_A4_1.dwg Plotted: Tue, Mar. 22, 2005 @ 5:21 PM By: JTATE

LEGEND

- 2' X 2' SUSPENDED ACOUSTICAL CEILING GRID
- RETURN AIR DIFFUSER
- SUPPLY AIR DIFFUSER
- LIGHT FIXTURE REF: ELEC.
- EMERGENCY LIGHT FIXTURE REF: ELEC.
- METAL PANEL SOFFIT
- RECESSED LIGHT FIXTURE
- LIGHT FIXTURE REF: ELEC.
- LIGHT FIXTURE REF: ELEC.
- EXHAUST FAN
- EXIT LIGHT
- LIGHT FIXTURE REF: ELEC.
- GYPSUM BOARD CEILING
- CEMENT PLASTER STUCCO

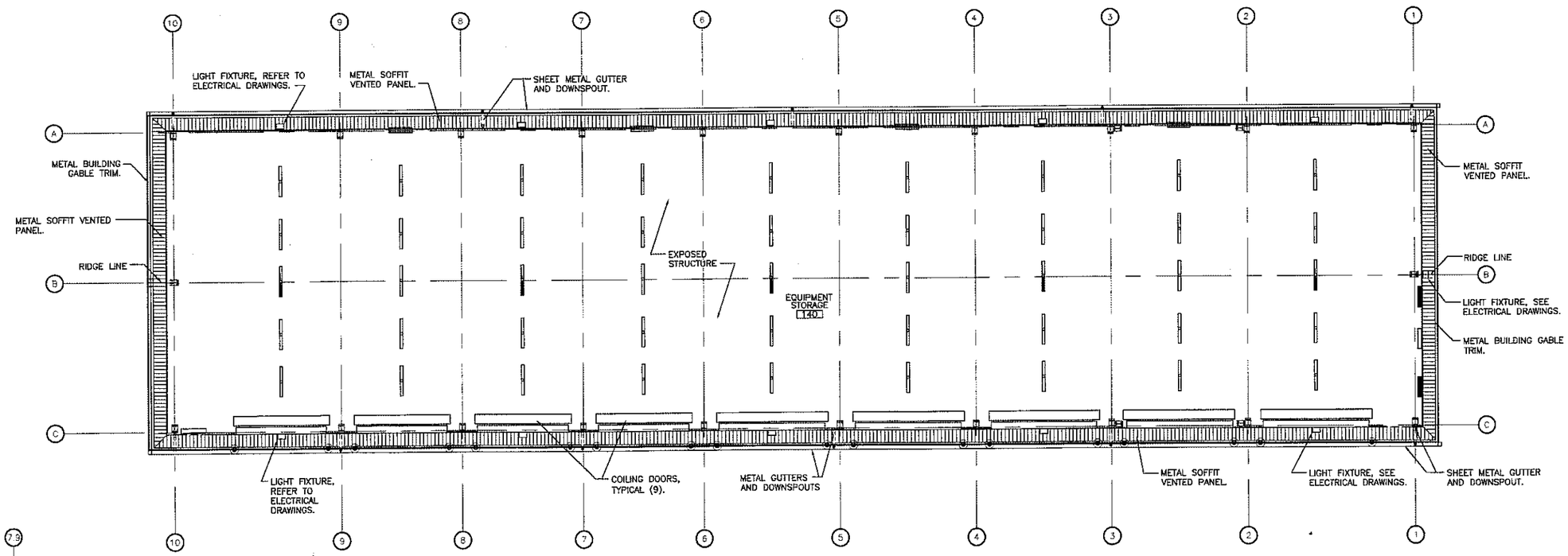

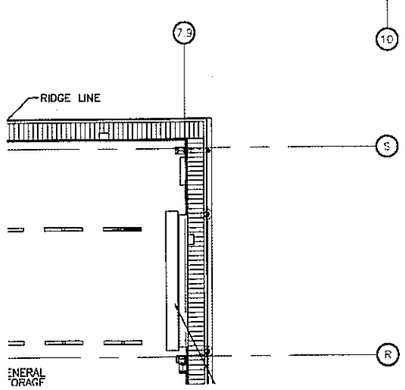

1 REFLECTED CEILING PLAN - BUILDING 3
SCALE: 1/8" = 1'-0"

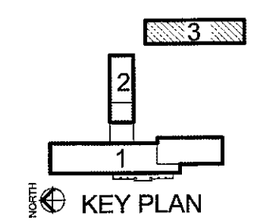

REFLECTED CEILING PLAN - BUILDING 3

NOTE: THIS DRAWING WAS CREATED FOR PRODUCTION ON 22" x 34" SHEET SIZE. DO NOT SCALE PRINTS.

Texas Department of Transportation
125 E. 11th Street
Austin, Texas 78701-2483
(512) 416-3948

Copyright © 2005 Texas Department of Transportation

REGISTERED ARCHITECT ADEL BAZAMEH 14289 STATE OF TEXAS 3/23/05

SOUTH TRAVIS AREA ENGINEER AND MAINTENANCE FACILITY
AUSTIN, TRAVIS COUNTY
AUSTIN DISTRICT 14

Revisions

Drawn by: JOT
Project No. 470400238
Date 03.23.2005
Sheet No.

A4.4
of sheets

CADFILE: T:\MNTFR\D14AUS\470400238\AcadArch\0238_A4_1.dwg Plotted: Tue, Mar. 22, 2005 @ 5:22 PM By: JTATE

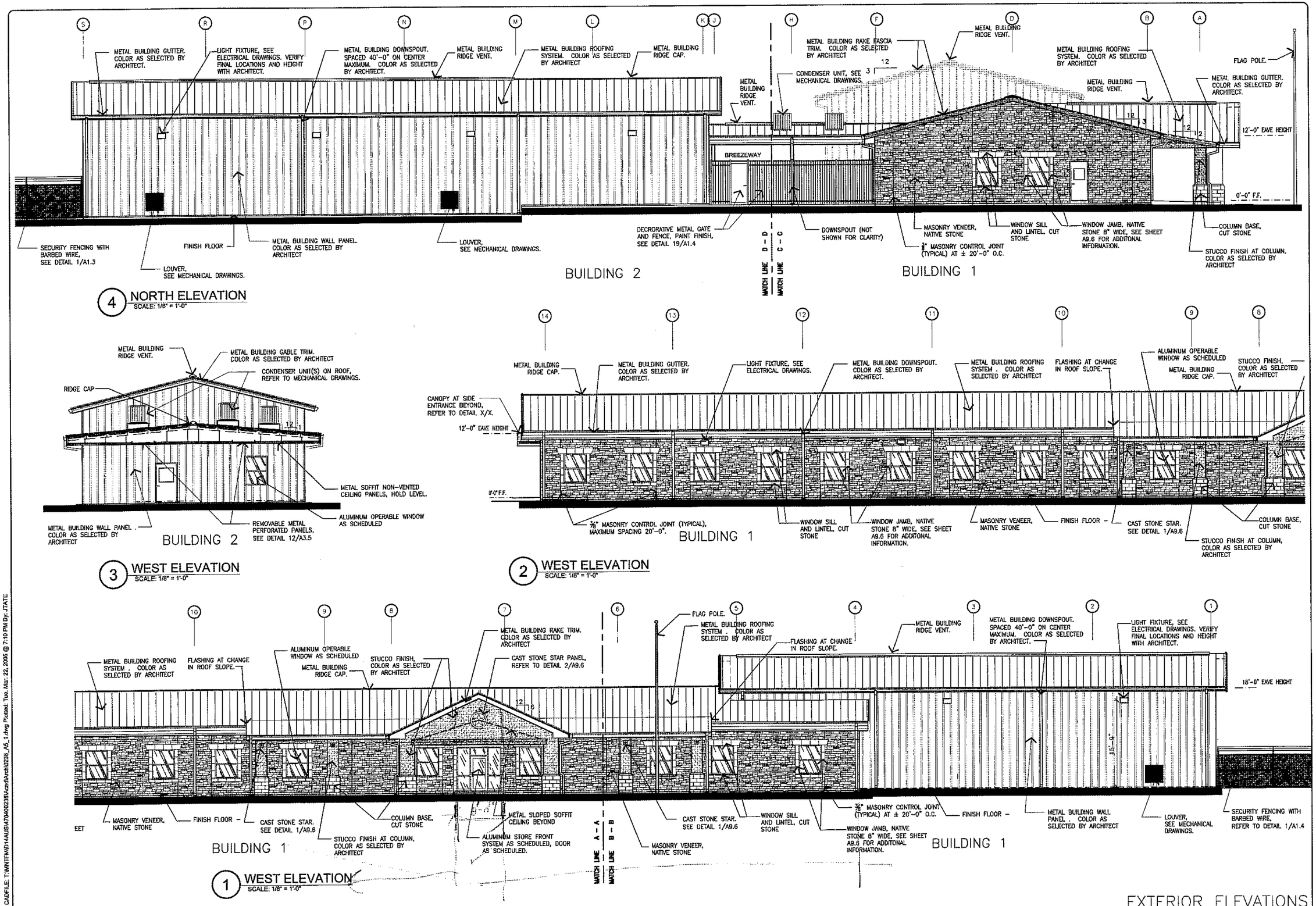

Texas Department of Transportation
125 E. 11th Street
Austin, Texas 78701-2483
(512) 416-3046
Copyright © 2005 Texas Department of Transportation

REGISTERED ARCHITECT
RIGEL BAZAN
14289
STATE OF TEXAS
3/23/05

SOUTH TRAVIS AREA ENGINEER AND MAINTENANCE FACILITY
AUSTIN, TRAVIS COUNTY
AUSTIN DISTRICT 14

Revisions

Drawn by: JOT
Project No. 470400238
Date 03.23.2005
Sheet No.
A5.1
of sheets

CADFILE: T:\MNTFM\214AUS\470400238\acad\Arch\0238_A5_1.dwg Plotted: Tue, Mar 22, 2005 @ 7:10 PM By: JTATE

NOTE: THIS DRAWING WAS CREATED FOR PRODUCTION 22" x 34" SHEET SIZE. DO NOT SCALE PRINTS.

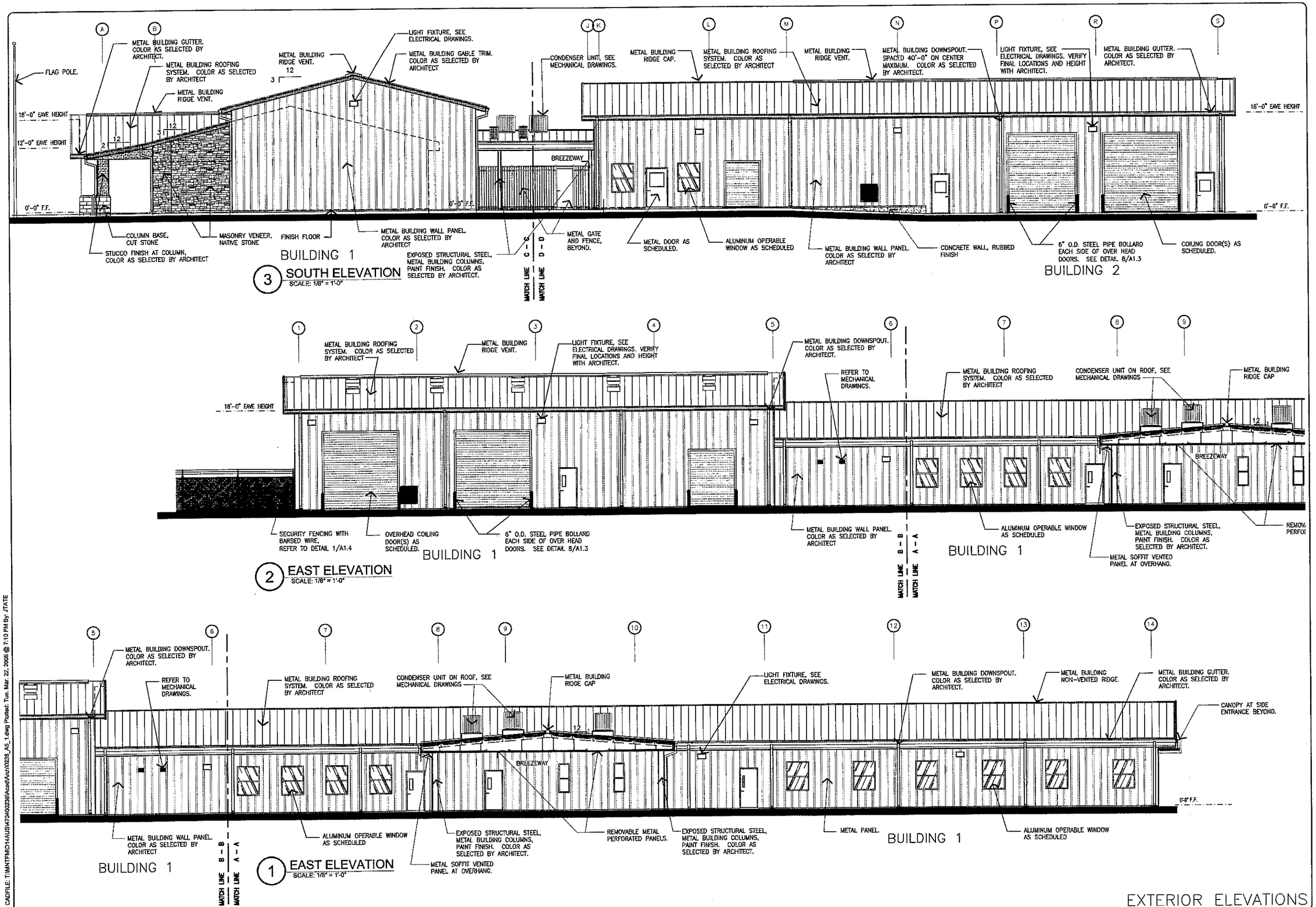

Texas Department of Transportation
125 E. 11th Street
Austin, Texas 78701-2483
(512) 416-3048
Copyright © 2003 Texas Department of Transportation

REGISTERED ARCHITECT ROEL BAZAN 14289 STATE OF TEXAS
3/23/05

SOUTH TRAVIS AREA ENGINEER AND MAINTENANCE FACILITY

AUSTIN, TRAVIS COUNTY
AUSTIN DISTRICT 14

Revisions

Drawn by: JOT
Project No. 470400238
Date 03.23.2005
Sheet No. A5.2 of sheets

NOTE: THIS DRAWING WAS CREATED FOR PRODUCTION 22 x 34" SHEET SIZE. DO NOT SCALE PRINTS.

CADFILE: T:\MNTFMD14\US470400238\Acad\Arch\0238_A5_1.dwg Plotted: Tue, Mar 22, 2005 @ 7:10 PM By: JTATE

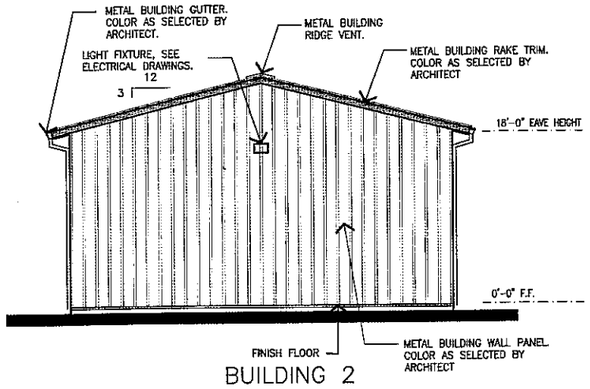

5 EAST ELEVATION
SCALE: 1/8" = 1'-0"

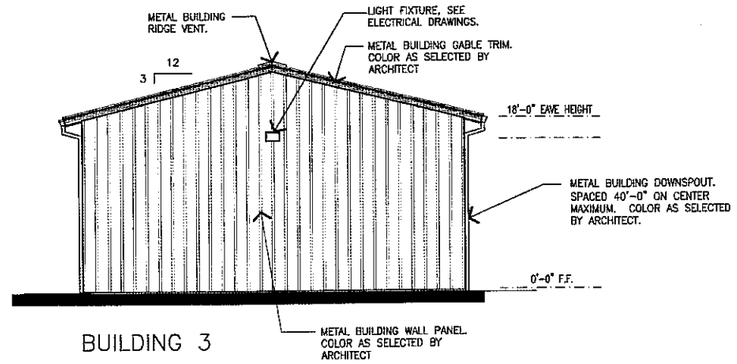

4 NORTH ELEVATION
SCALE: 1/8" = 1'-0"

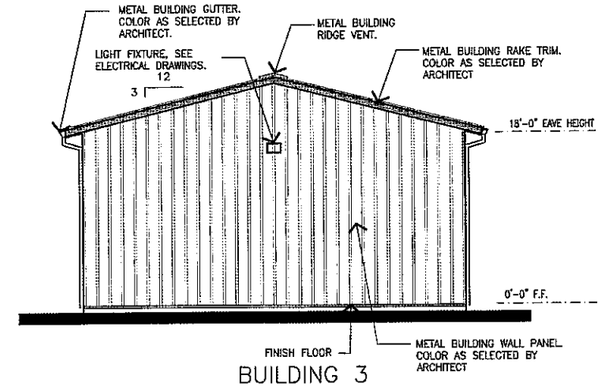

3 SOUTH ELEVATION
SCALE: 1/8" = 1'-0"

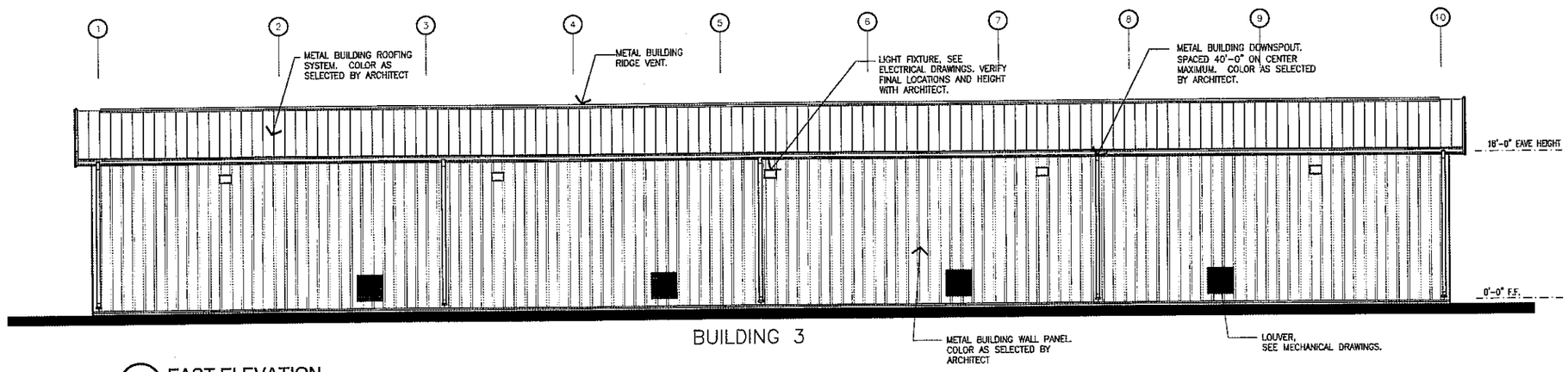

2 EAST ELEVATION
SCALE: 1/8" = 1'-0"

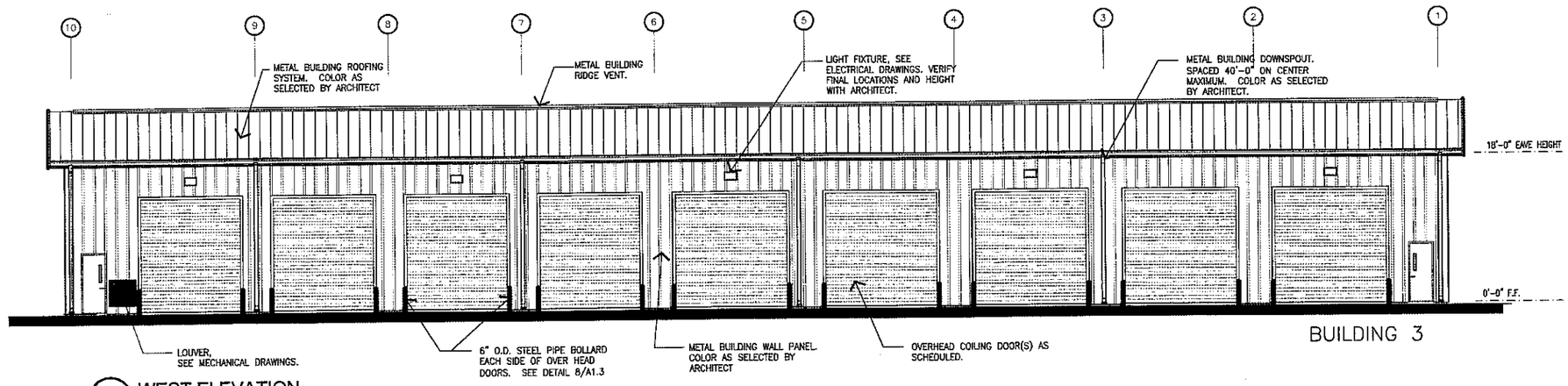

1 WEST ELEVATION
SCALE: 1/8" = 1'-0"

EXTERIOR ELEVATIONS

NOTE: THIS DRAWING WAS CREATED FOR PRODUCTION ON 22"x 34" SHEET SIZE. DO NOT SCALE PRINTS.

CADFILE: T:\MNTF\MED14\US470400238\Arch\0238_A5_1.dwg Plotted: Tue, Mar 22, 2005 @ 7:12 PM By: JTATE

Texas Department of Transportation
125 E. 11th Street
Austin, Texas 78701-2483
(512) 416-3048

Copyright © 2005 Texas Department of Transportation

REGISTERED ARCHITECT
ADEL BAZAN
14282
STATE OF TEXAS
3/23/05

SOUTH TRAVIS AREA ENGINEER AND MAINTENANCE FACILITY
AUSTIN, TRAVIS COUNTY
AUSTIN DISTRICT 14

Revisions

Drawn by: JOT
Project No. 470400238
Date 03.23.2005
Sheet No.
A5.3
of sheets

TOILET ACCESSORIES SCHEDULE / KEY NOTES

TA1 – 24" X 36" MIRROR. BOTTOM EDGE MOUNTED 40" A.F.F.
TA2 – DOUBLE ROLL TOILET TISSUE DISPENSER
TA3 – SANITARY NAPKIN DISPOSAL/TOILET TISSUE DISPENSER
TA4 – SURFACE MOUNTED PAPER TOWEL DISPENSER – 4'–2" A.F.F. TO DISPENSER OPENING
TA5 – SOAP DISPENSER @ 44" AFF
TA6 – TOILET GRAB BARS – 34" A.F.F. 36" LONG AT REAR, 42" LONG ON SIDE LOCATED 12" MAX FROM REAR WALL.
TA7 – NOT USED
TA8 – WALL MOUNTED LAVATORY
TA9 – WALL MOUNTED WATER CLOSET
TA10– WALL MOUNTED URINAL
TA11– URINAL SCREEN
TA12– CURTAIN AND ROD
TA13– 9" WIDE BENCH ON PEDESTALS
TA14– LOCKERS ON 4" CONCRETE CURB
TA15– STAINLESS STEEL CORNER GUARDS 5'–0" HT.
TA16– CLOTHES HOOK @ 48" AFF MAX.
TA17– PROTECTIVE COVERS AT PIPES
TA18– SHOWER GRAB BAR @ 34" A. F. F.
TA19– 4" SPLASH GUARD
TA20– ACCESSIBLE ONE–PIECE SHOWER ASSEMBLY. PROVIDE APPROPRIATE BACK BLOCKING @ ALL THREE SIDES. REF: PLUMBING
TA21– RECESSED PAPER TOWEL DISPENSER/DISPOSAL
TA22– PLASTIC LAMINATE COUNTER WITH RECESSED LAVATORY
TA23– 24"x48" BENCH ON 4 PEDESTALS
TA24– 70" X 36" MIRROR. BOTTOM EDGE MOUNTED 40" A.F.F.
TA25– TOILET PARTITIONS

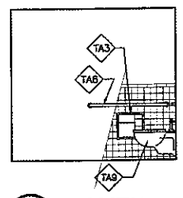

13 WOMEN
SCALE: 1/4" = 1'-0"

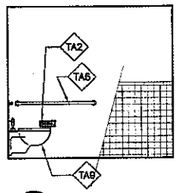

12 MEN
SCALE: 1/4" = 1'-0"

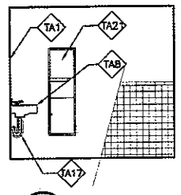

11 WOMEN
SCALE: 1/4" = 1'-0"

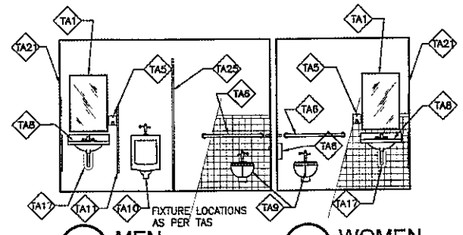

10 MEN
SCALE: 1/4" = 1'-0"

9 WOMEN
SCALE: 1/4" = 1'-0"

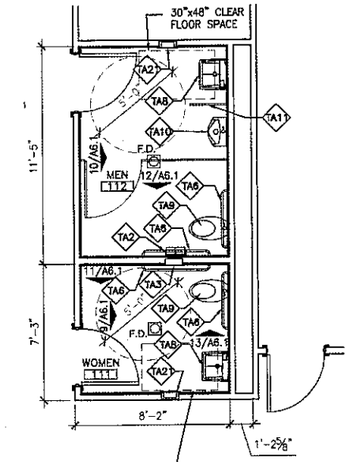

2 ENLARGED FLOOR PLAN
SCALE: 1/4" = 1'-0"

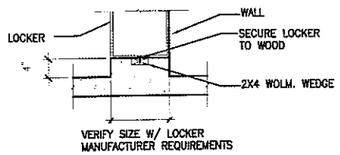

14 BASE AT LOCKERS
SCALE: 3/4" = 1'-0"

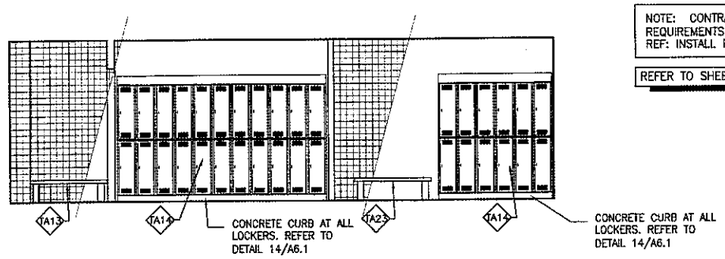

8 MEN - ELEVATION
SCALE: 1/4" = 1'-0"

NOTE: CONTRACTOR TO VERIFY OPENING REQUIREMENTS FOR NEW PRE–FAB SHOWER STALL. REF: INSTALL PLUMBING PER ADA & TAS COMPLIANCE

REFER TO SHEET A11–1 FOR ADA MOUNTING HEIGHTS

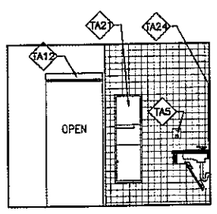

7 WOMEN
SCALE: 1/4" = 1'-0"

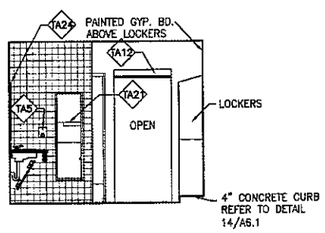

6 MEN - ELEVATION
SCALE: 1/4" = 1'-0"

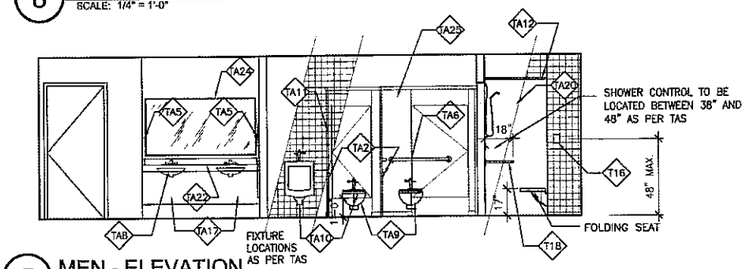

5 MEN - ELEVATION
SCALE: 1/4" = 1'-0"

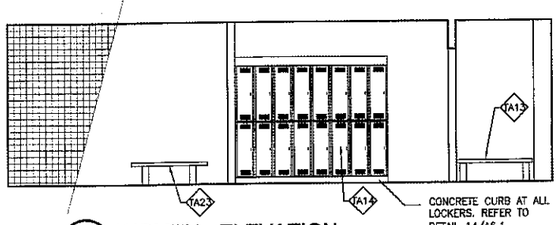

4 WOMEN - ELEVATION
SCALE: 1/4" = 1'-0"

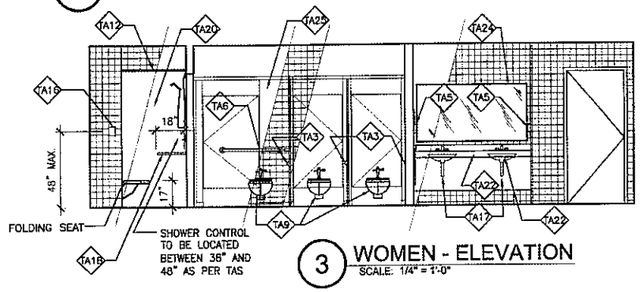

3 WOMEN - ELEVATION
SCALE: 1/4" = 1'-0"

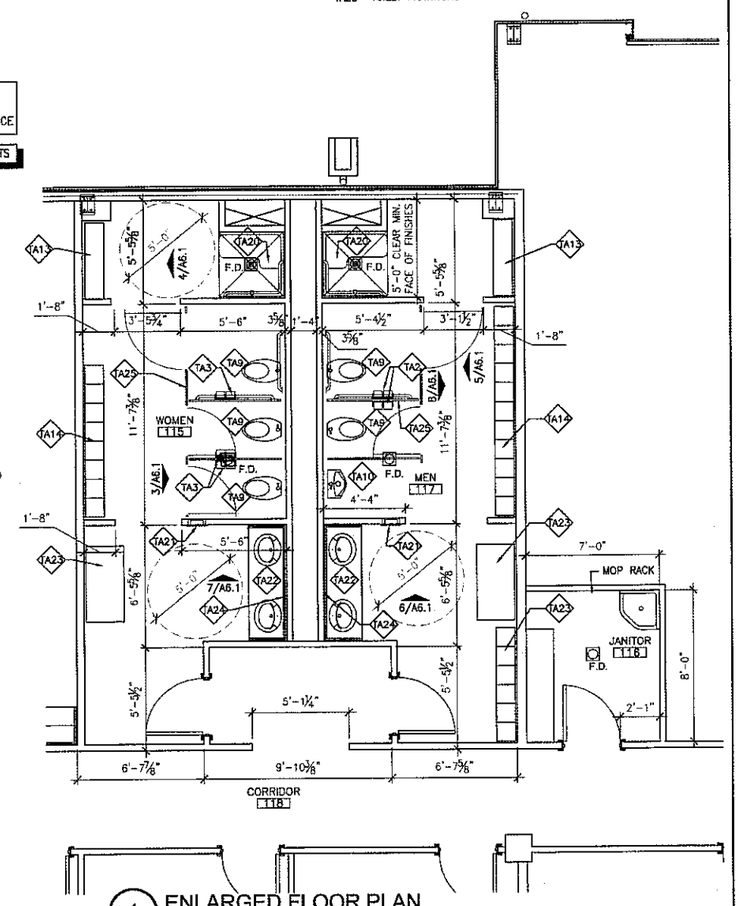

1 ENLARGED FLOOR PLAN
SCALE: 1/4" = 1'-0"

TOILETS - PLANS & ELEVATIONS

NOTE: THIS DRAWING WAS CREATED FOR PRODUCTION ON 22" x 34" SHEET SIZE. DO NOT SCALE PRINTS.

Texas Department of Transportation
125 E. 11th Street
Austin, Texas 78701-2483
(512) 416-3948

Copyright © 2005 Texas Department of Transportation

REGISTERED ARCHITECT ROEL BAZAN 14289 STATE OF TEXAS
3/23/05

SOUTH TRAVIS AREA ENGINEER AND MAINTENANCE FACILITY
AUSTIN, TRAVIS COUNTY
AUSTIN DISTRICT 14

Revisions

Drawn by: JOT
Project No. 470400238
Date 03.23.2005
Sheet No.
A6.1
of sheets

CADFILE: T:\MNTFMD14\US47\0400238\Acad\Arch\0238_A6_1.dwg Plotted: Tue, Mar 22, 2005 @ 10:07 PM By: JTATE

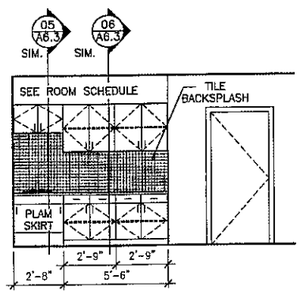

14 ELEVATION CORRIDOR 110
SCALE: 1/4" = 1'-0"

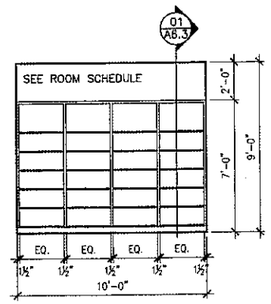

13 ELEVATION STORAGE 102
SCALE: 1/4" = 1'-0"

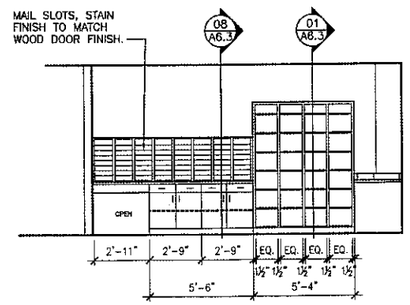

12 ELEVATION WORK AREA 105
SCALE: 1/4" = 1'-0"

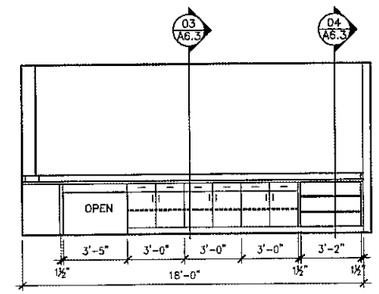

11 ELEVATION WORK AREA 105
SCALE: 1/4" = 1'-0"

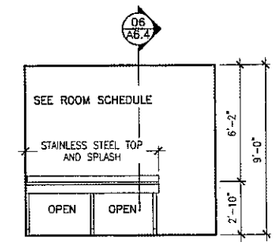

10 ELEVATION DUST 133
SCALE: 1/4" = 1'-0"

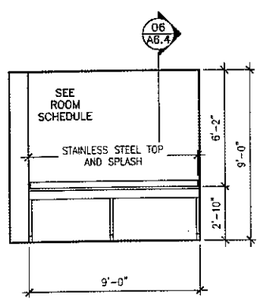

9 ELEVATION OVEN 132
SCALE: 1/4" = 1'-0"

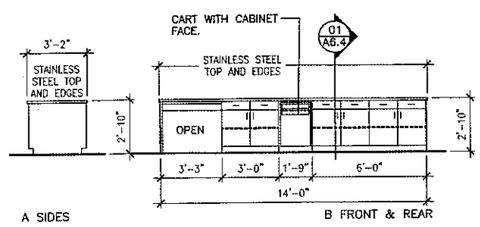

8 ELEVATION LABORATORY 130
SCALE: 1/4" = 1'-0"

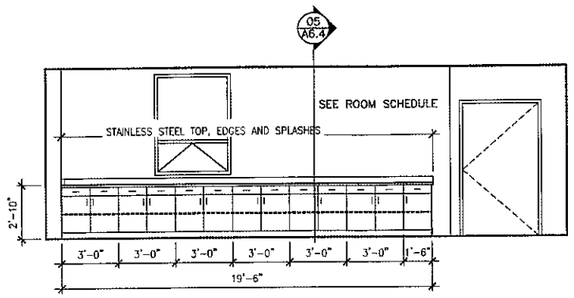

7 ELEVATION WEST WALL LABORATORY 130
SCALE: 1/4" = 1'-0"

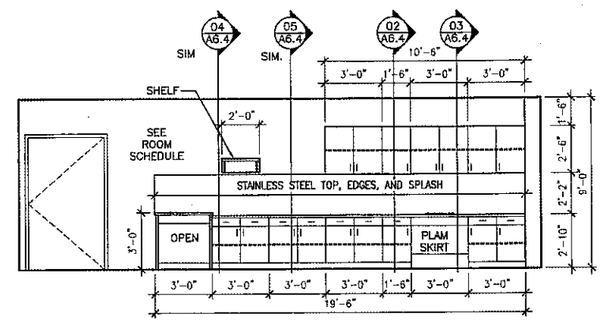

6 ELEVATION EAST WALL LABORATORY 130
SCALE: 1/4" = 1'-0"

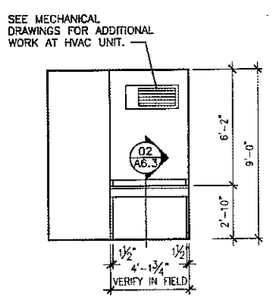

5 ELEVATION TELECOM 109
SCALE: 1/4" = 1'-0"

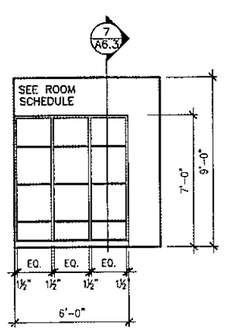

4 ELEVATION JANITOR 116
SCALE: 1/4" = 1'-0"

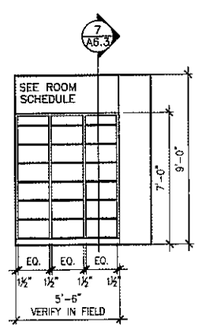

3 ELEVATION STORAGE 108
SCALE: 1/4" = 1'-0"

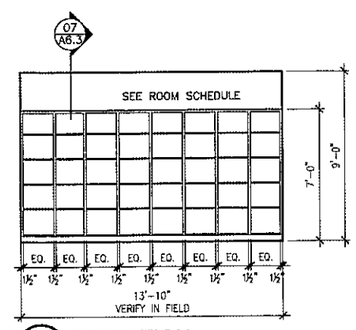

2 ELEVATION ROOM 121
SCALE: 1/4" = 1'-0"

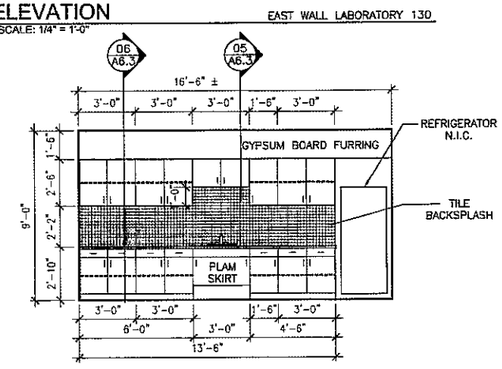

1 ELEVATION MEETING ROOM 114
SCALE: 1/4" = 1'-0"

MILLWORK ELEVATIONS

NOTE: THIS DRAWING WAS CREATED FOR PRODUCTION ON 22" x 34" SHEET SIZE. DO NOT SCALE PRINTS.

CADFILE: T:\MINTFAN\D14\US470400238\Acad\Arch\0238_A6_2.dwg Plotted: Tue, Mar 22, 2005 @ 1:06 PM By: JTATE

Texas Department of Transportation
125 E. 11th Street
Austin, Texas 78701-2483
(512) 416-2048

Copyright © 2005 Texas Department of Transportation

REGISTERED ARCHITECT
ROBERT BAZANT JR.
14280
STATE OF TEXAS
3/23/05

SOUTH TRAVIS AREA ENGINEER AND MAINTENANCE FACILITY
AUSTIN, TRAVIS COUNTY
AUSTIN DISTRICT 14

Revisions

Drawn by: JOT
Project No. 470400238
Date 03.23.2005
Sheet No.
A6.2
of sheets

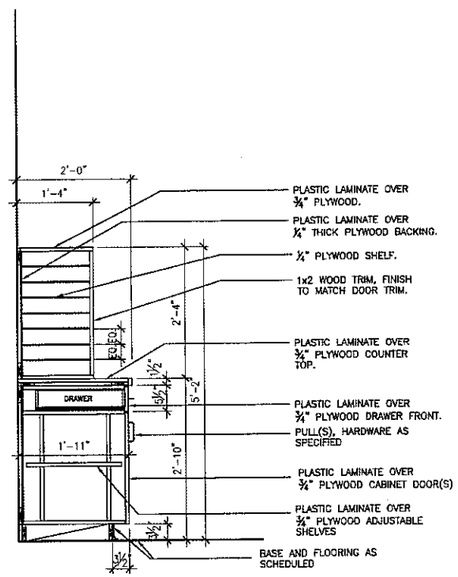

8 SECTION
SCALE: 3/4" = 1'-0"

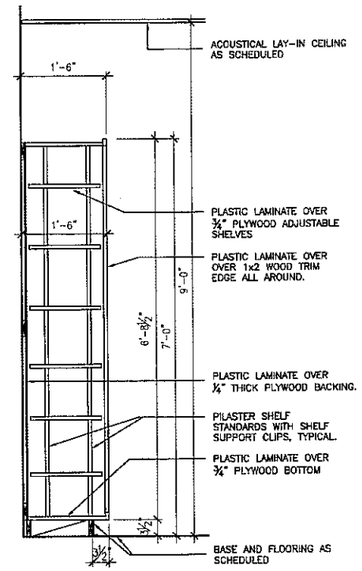

7 SECTION
SCALE: 3/4" = 1'-0"

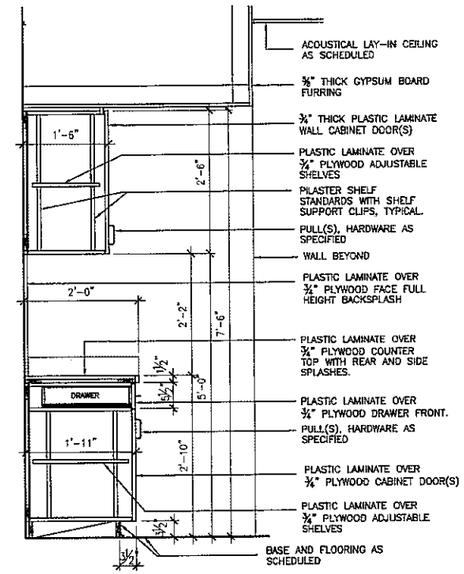

6 SECTION
SCALE: 3/4" = 1'-0"

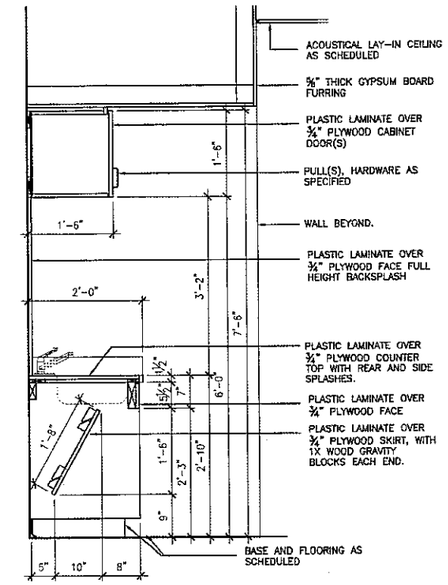

5 SECTION
SCALE: 3/4" = 1'-0"

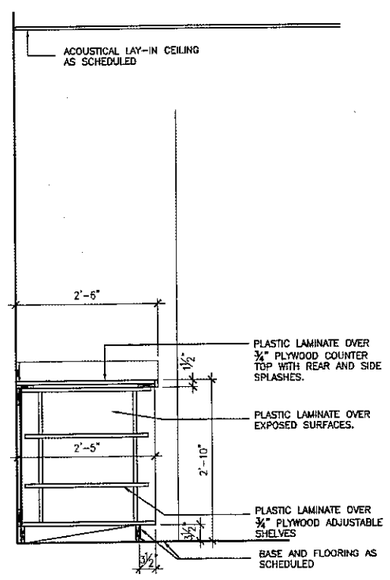

4 SECTION
SCALE: 3/4" = 1'-0"

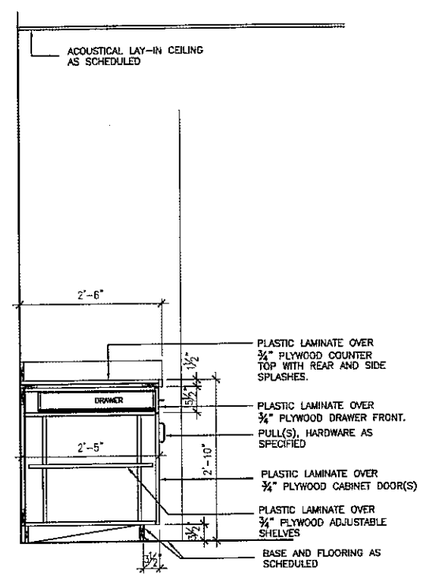

3 SECTION
SCALE: 3/4" = 1'-0"

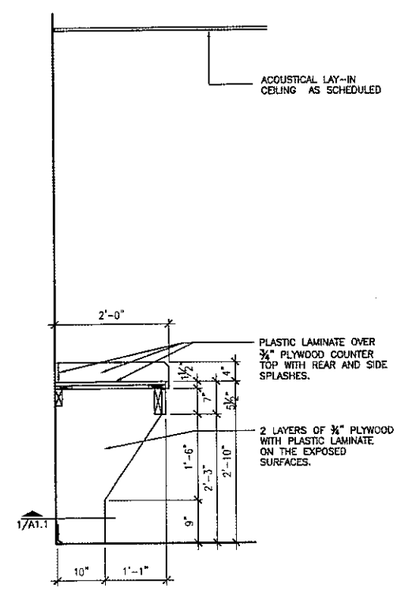

2 SECTION
SCALE: 3/4" = 1'-0"

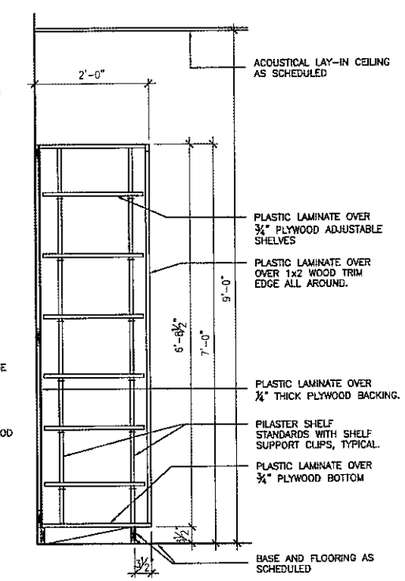

1 SECTION
SCALE: 3/4" = 1'-0"

GENERAL NOTES:

1. PROVIDE 2 ROWS OF 2X6 FIRE-RETARDANT WOOD BLOCKING FOR EACH UPPER CABINET.
2. SEE MILLWORK ELEVATIONS FOR NUMBER OF ADJUSTABLE SHELVES.
3. PLASTIC LAMINATE FINISH AT THE INTERIOR SURFACES OF ALL CABINETS AND SHELVES SURFACES.
4. REFER TO SHEET A6.5 FOR MILLWORK DETAILS.

MILLWORK SECTIONS

NOTE: THIS DRAWING WAS CREATED FOR PRODUCTION ON 22" x 34" SHEET SIZE. DO NOT SCALE PRINTS.

Texas Department of Transportation
125 E. 11th Street
Austin, Texas 78701-2483
(512) 416-3048

Copyright © 2005 Texas Department of Transportation

REGISTERED ARCHITECT
RUEL BAZAN
14269
STATE OF TEXAS
3/23/05

SOUTH TRAVIS AREA ENGINEER AND MAINTENANCE FACILITY
AUSTIN, TRAVIS COUNTY
AUSTIN DISTRICT 14

Revisions

Drawn by: JOT
Project No. 470400238
Date 03.23.2005
Sheet No.
A6.3
of sheets

CADFILE: T:\MNTFNID14\US470400238\Acad\Arch\0238_A6_2.dwg Plotted: Tue, Mar. 22, 2005 @ 5:43 PM By: JTATE

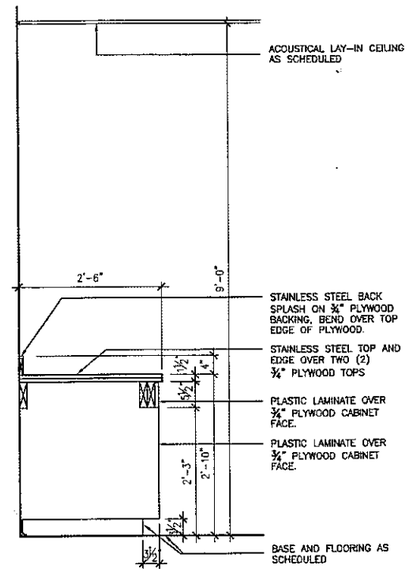

7 SECTION
SCALE: 3/4" = 1'-0"

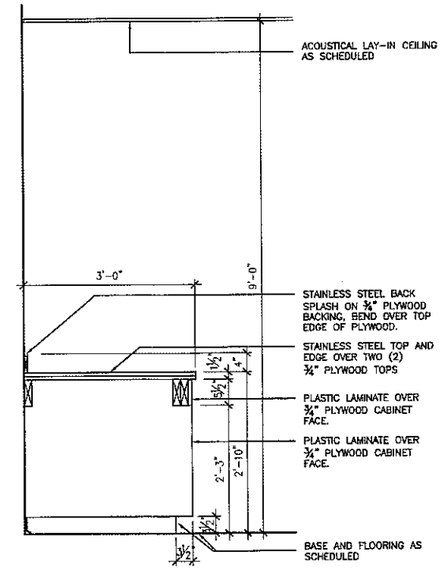

6 SECTION
SCALE: 3/4" = 1'-0"

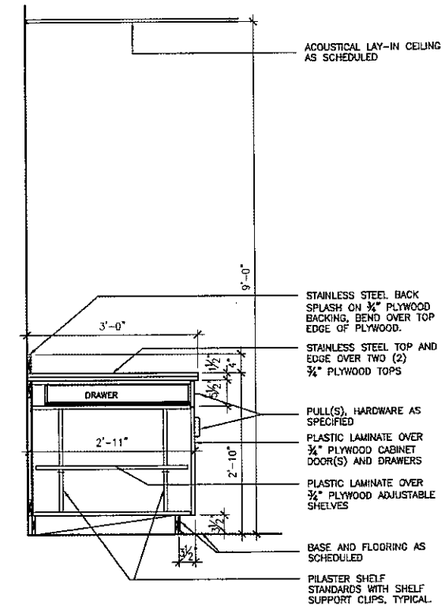

5 SECTION
SCALE: 3/4" = 1'-0"

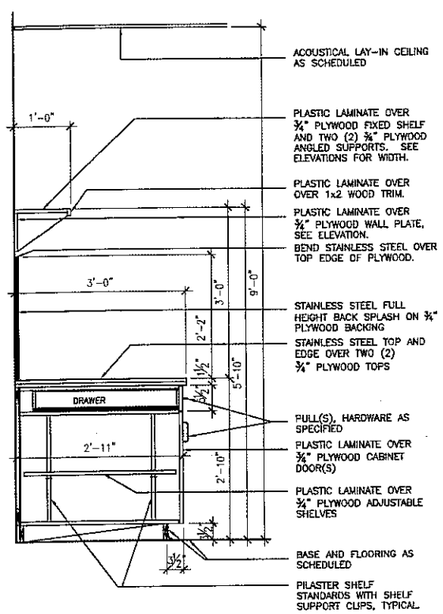

4 SECTION DETAIL
SCALE: 3/4" = 1'-0"

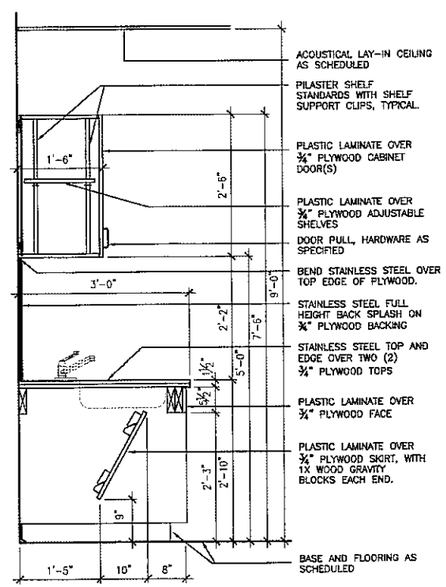

3 SECTION DETAIL
SCALE: 3/4" = 1'-0"

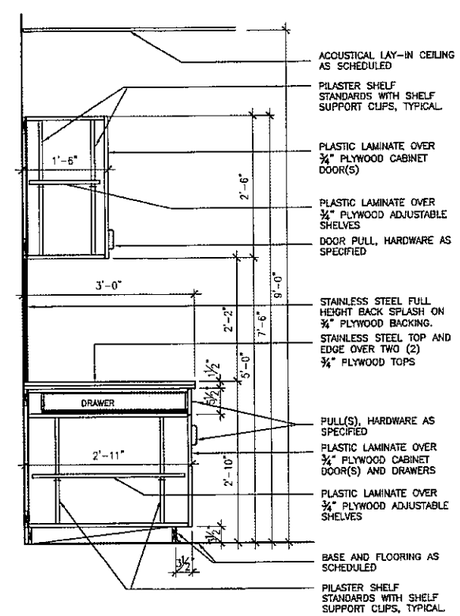

2 SECTION DETAIL
SCALE: 3/4" = 1'-0"

GENERAL NOTES:

1. PROVIDE 2 ROWS OF 2X6 FIRE-RETARDANT WOOD BLOCKING FOR EACH UPPER CABINET.
2. SEE MILLWORK ELEVATIONS FOR NUMBER OF ADJUSTABLE SHELVES.
3. PLASTIC LAMINATE FINISH AT THE INTERIOR SURFACES OF ALL CABINETS AND SHELVES SURFACES.
4. REFER TO SHEET A6.5 FOR MILLWORK DETAILS.

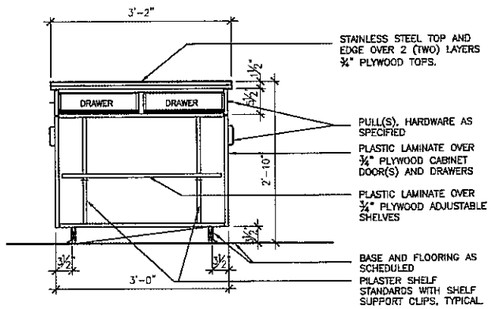

1 SECTION
SCALE: 3/4" = 1'-0"

MILLWORK SECTIONS

NOTE: THIS DRAWING WAS CREATED FOR PRODUCTION 22in x 34" SHEET SIZE. DO NOT SCALE PRINTS.

Texas Department of Transportation
125 E. 11th Street
Austin, Texas 78701-2483
(512) 416-3048

Copyright © 2005 Texas Department of Transportation

REGISTERED ARCHITECT ROEL BAZANTE 14286 STATE OF TEXAS
3/23/05

SOUTH TRAVIS AREA ENGINEER AND MAINTENANCE FACILITY
AUSTIN, TRAVIS COUNTY
AUSTIN DISTRICT 14

Revisions

Drawn by: JOT
Project No. 470400238
Date 03.23.2005
Sheet No.
A6.4
of sheets

CADFILE: T:\MNTFMD14\US470400238\Cad\Arch\0238_A5_2.dwg Plotted: Tue, Mar. 22, 2005 @ 1:52 PM By: JTATE

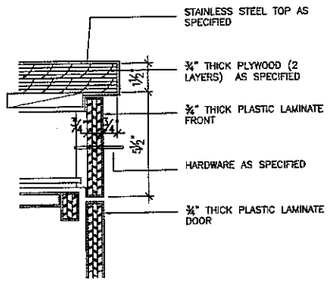

14 ENLARGED DETAIL
SCALE: 3" = 1'-0"

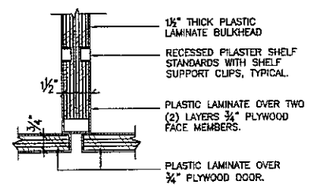

13 ENLARGED DETAIL
SCALE: 3" = 1'-0"

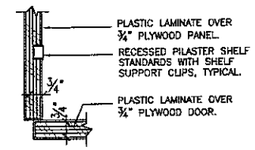

12 ENLARGED DETAIL
SCALE: 3" = 1'-0"

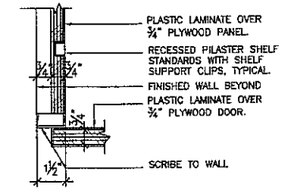

11 ENLARGED DETAIL
SCALE: 3" = 1'-0"

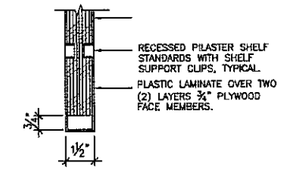

10 ENLARGED DETAIL
SCALE: 3" = 1'-0"

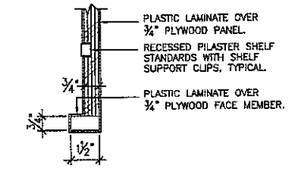

9 ENLARGED DETAIL
SCALE: 3" = 1'-0"

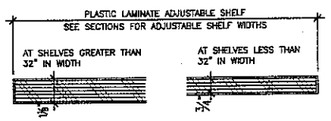

8 ENLARGED DETAIL
SCALE: 3" = 1'-0"

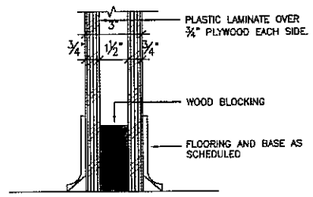

7 ENLARGED DETAIL
SCALE: 3" = 1'-0"

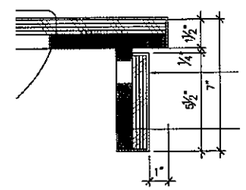

6 ENLARGED DETAIL
SCALE: 3" = 1'-0"

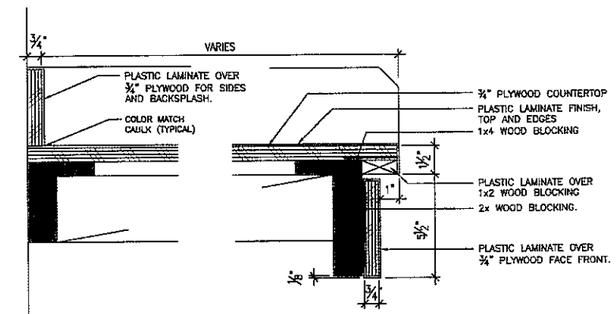

5 ENLARGED DETAIL
SCALE: 3" = 1'-0"

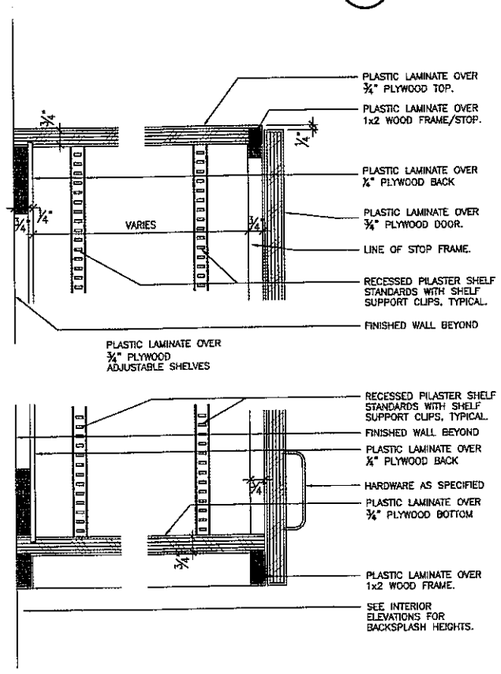

4 ENLARGED DETAIL
SCALE: 3" = 1'-0"

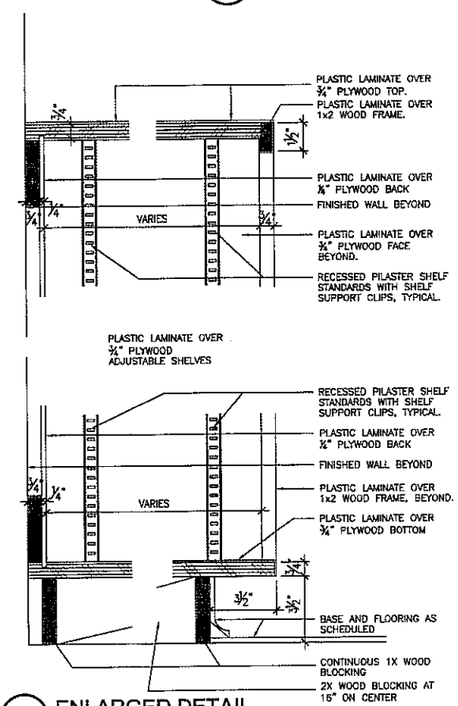

3 ENLARGED DETAIL
SCALE: 3" = 1'-0"

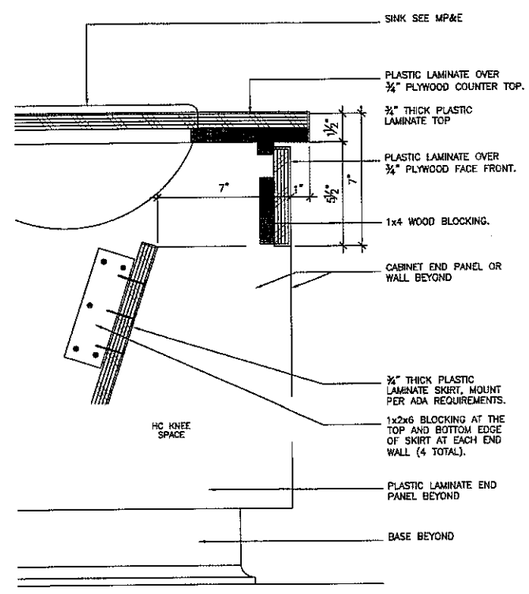

2 ENLARGED DETAIL
SCALE: 3" = 1'-0"

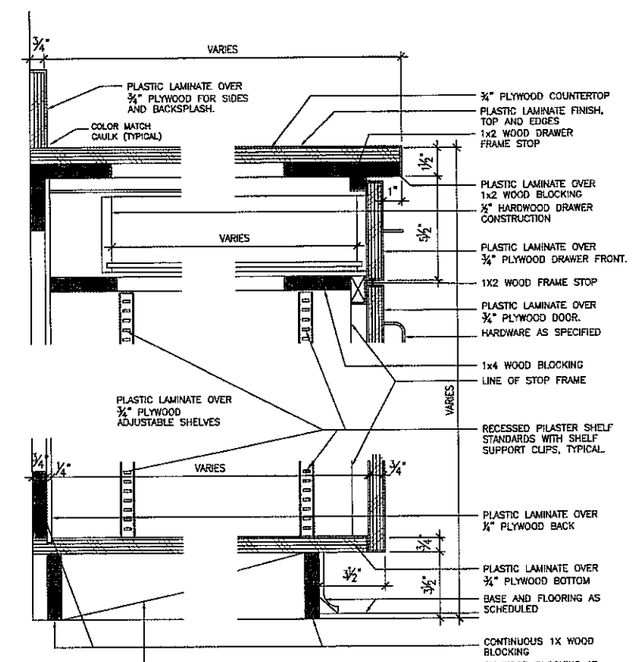

1 ENLARGED DETAIL
SCALE: 3" = 1'-0"

MILLWORK DETAILS

NOTE: THIS DRAWING WAS CREATED FOR PRODUCTION ON 22" x 34" SHEET SIZE. DO NOT SCALE PRINTS.

Texas Department of Transportation
125 E. 11th Street
Austin, Texas 78701-2483
(512) 416-3048
Copyright © 2005 Texas Department of Transportation

REGISTERED ARCHITECT ROEL BAZAN 14259 STATE OF TEXAS 3/23/05

SOUTH TRAVIS AREA ENGINEER AND MAINTENANCE FACILITY
AUSTIN, TRAVIS COUNTY
AUSTIN DISTRICT 14

Revisions

Drawn by: JOT
Project No. 470400238
Date 03.23.2005
Sheet No.
A6.5
of sheets

CADFILE: T:\MNTFIARD14\AUS\470400238\Acad\Arch\0238_A6_2.dwg Plotted: Tue, Mar 22, 2005 @ 1:52 PM By: JTATE

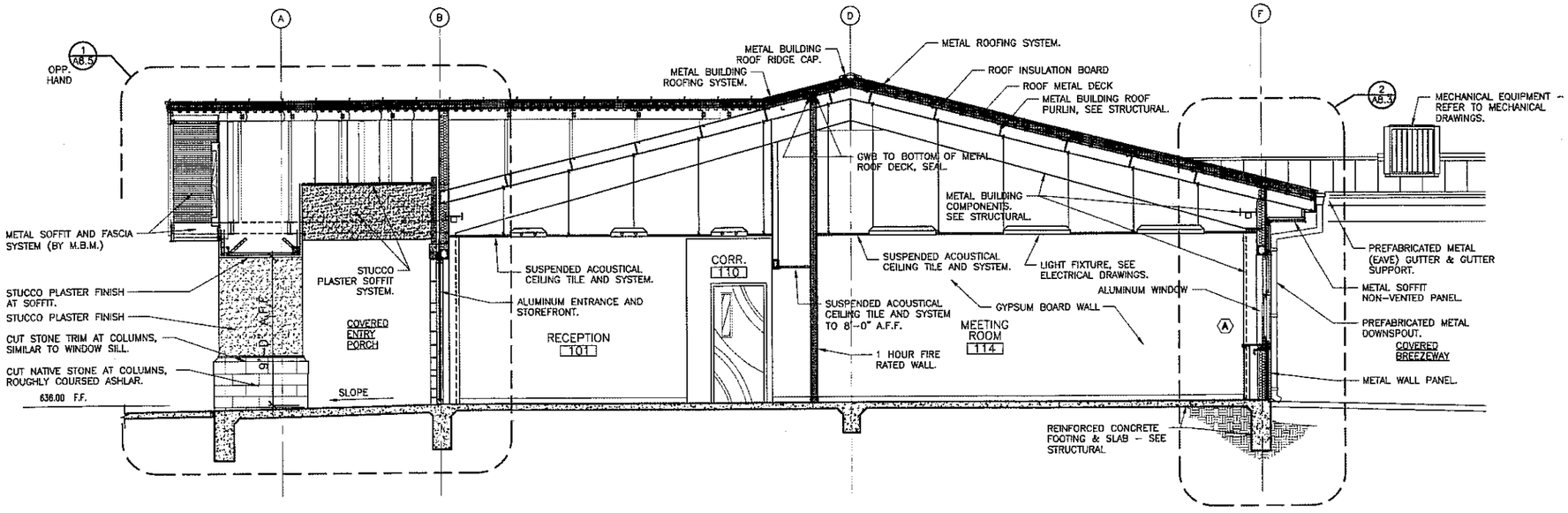

2 BUILDING SECTION - OFFICE
SCALE: 1/4" = 1'-0"

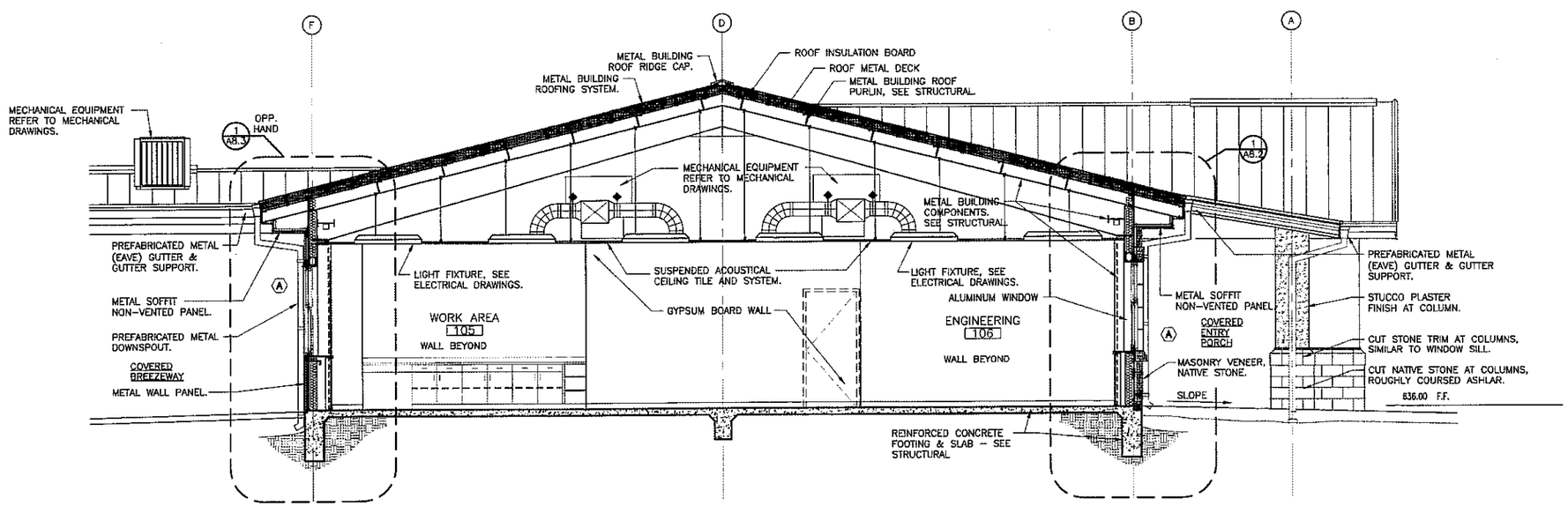

1 BUILDING SECTION - OFFICE
SCALE: 1/4" = 1'-0"

BUILDING SECTIONS

NOTE: THIS DRAWING WAS CREATED FOR PRODUCTION ON 22" x 34" SHEET SIZE. DO NOT SCALE PRINTS.

CADFILE: T:\MNTFIND14\US470400238\Acad\Arch\0238_A7.dwg Plotted: Tue, Mar. 22, 2005 @ 5:12 PM By: JTATE

Texas Department of Transportation
125 E. 11th Street
Austin, Texas 78701-2483
(512) 416-3948

Copyright © 2005 Texas Department of Transportation

REGISTERED ARCHITECT KIRK BAZAN 14260 STATE OF TEXAS
3/23/05

SOUTH TRAVIS AREA ENGINEER AND MAINTENANCE FACILITY
AUSTIN, TRAVIS COUNTY
AUSTIN DISTRICT 14

Revisions

Drawn by: JOT
Project No. 470400238
Date 03.23.2005
Sheet No.
A7.1
of sheets

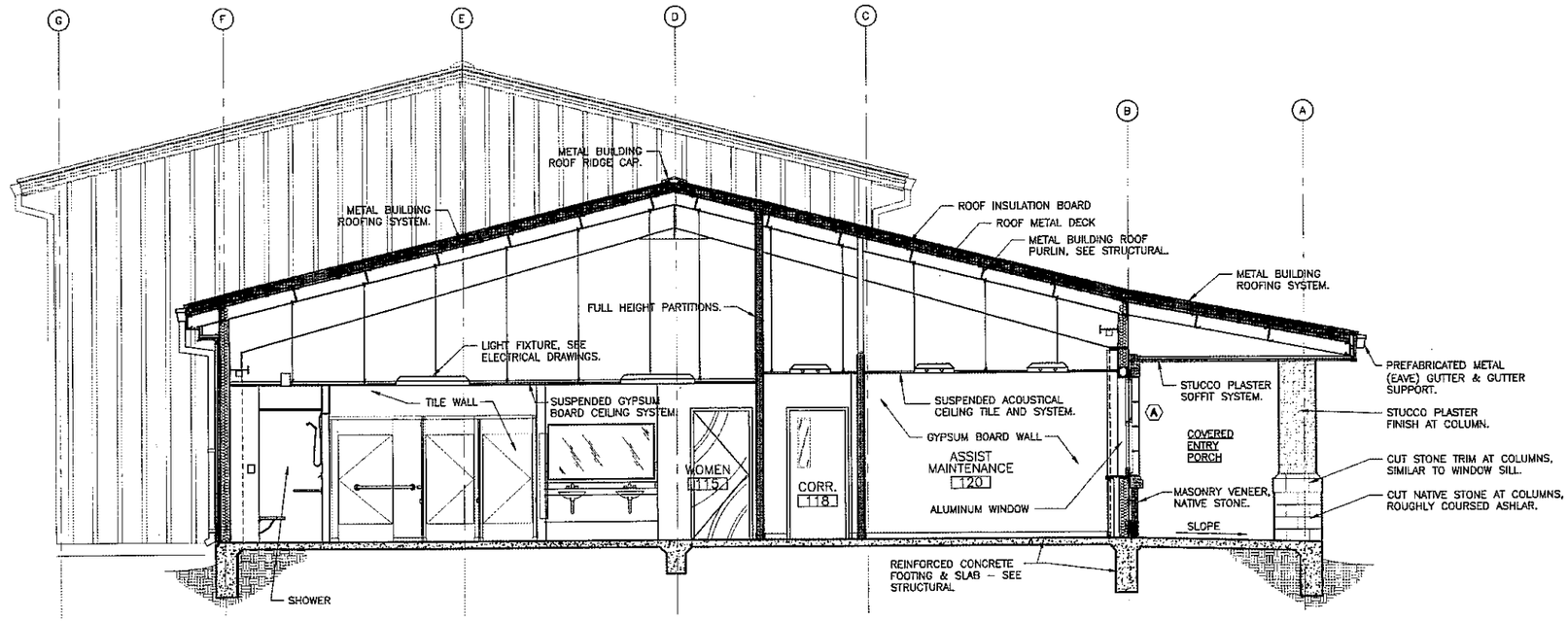

2 BUILDING SECTION - OFFICE
SCALE: 1/4" = 1'-0"

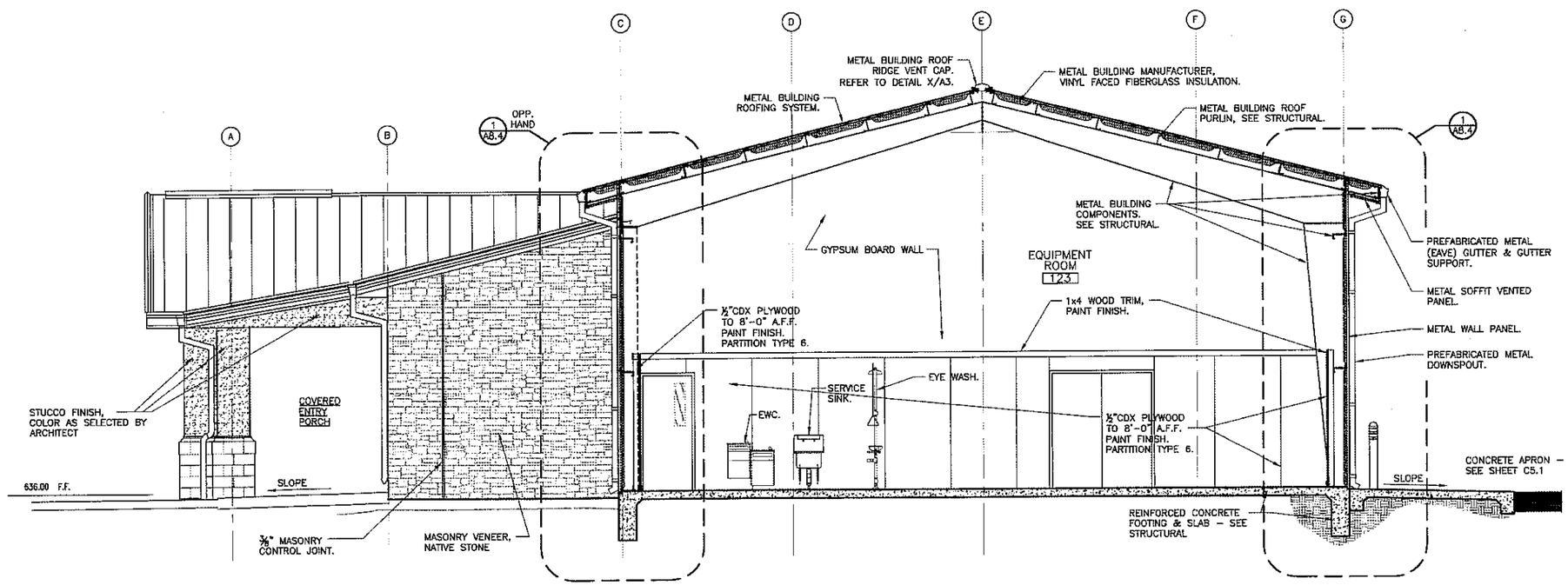

1 BUILDING SECTION - SHOP
SCALE: 1/4" = 1'-0"

BUILDING SECTIONS

NOTE: THIS DRAWING WAS CREATED FOR PRODUCTION 22 x 34" SHEET SIZE. DO NOT SCALE PRINTS.

CADFILE: T:\MNTFR\0014AUS\470400238\cad\Acsi\0238_A7.dwg Plotted: Tue, Mar 22, 2005 @ 8:12 PM By: JTATE

Texas Department of Transportation
125 E. 11th Street
Austin, Texas 78701-2483
(512) 416-3048

Copyright © 2005 Texas Department of Transportation

REGISTERED ARCHITECT ROEL BAZAN 14289 STATE OF TEXAS
3/23/05

SOUTH TRAVIS AREA ENGINEER AND MAINTENANCE FACILITY
AUSTIN, TRAVIS COUNTY
AUSTIN DISTRICT 14

Revisions
△
△
△
△

Drawn by: JOT
Project No. 470400238
Date 03.23.2005
Sheet No.
A7.2
of sheets

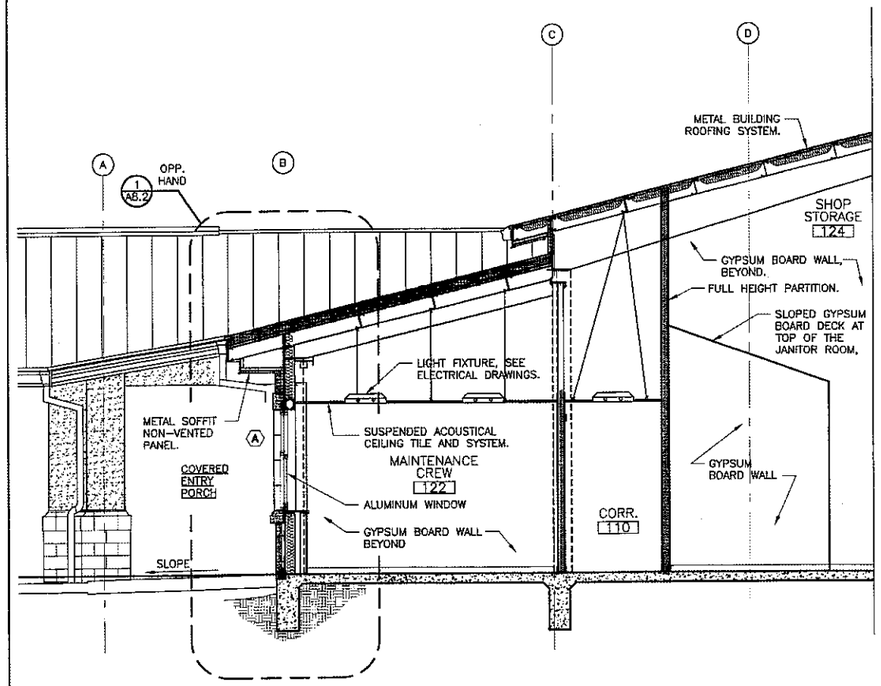

3 PARTIAL BUILDING SECTION - SHOP
SCALE: 1/4" = 1'-0"

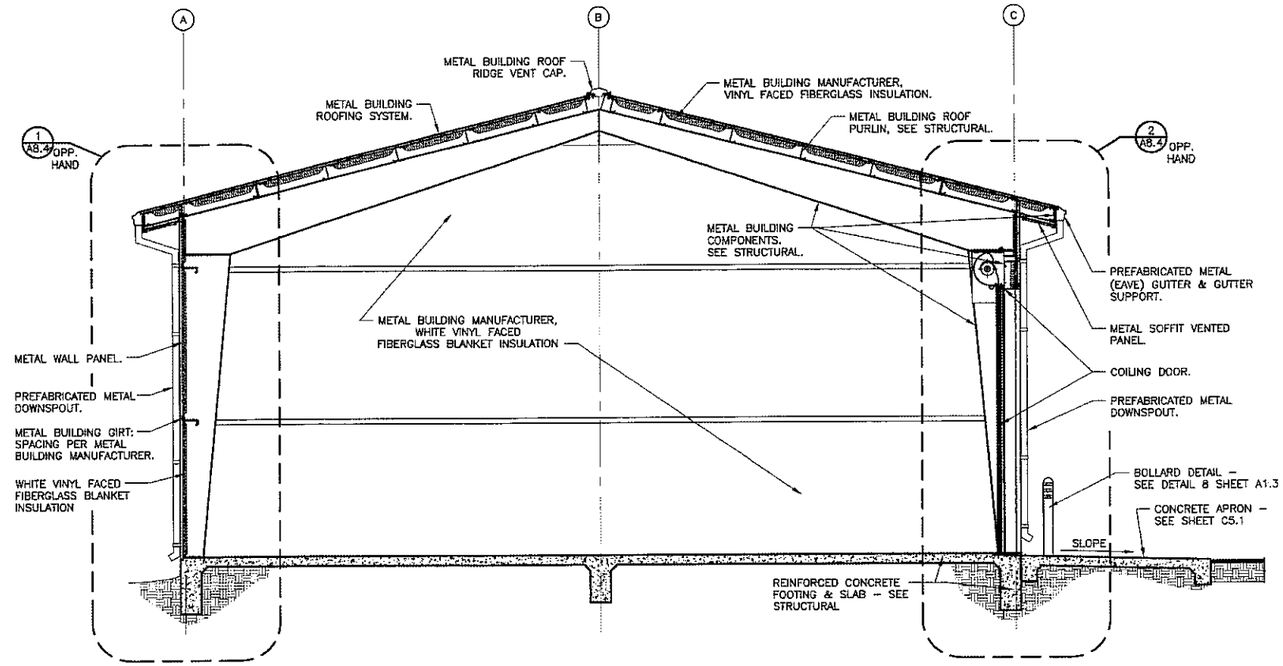

2 BUILDING SECTION - SHOP
SCALE: 1/4" = 1'-0"

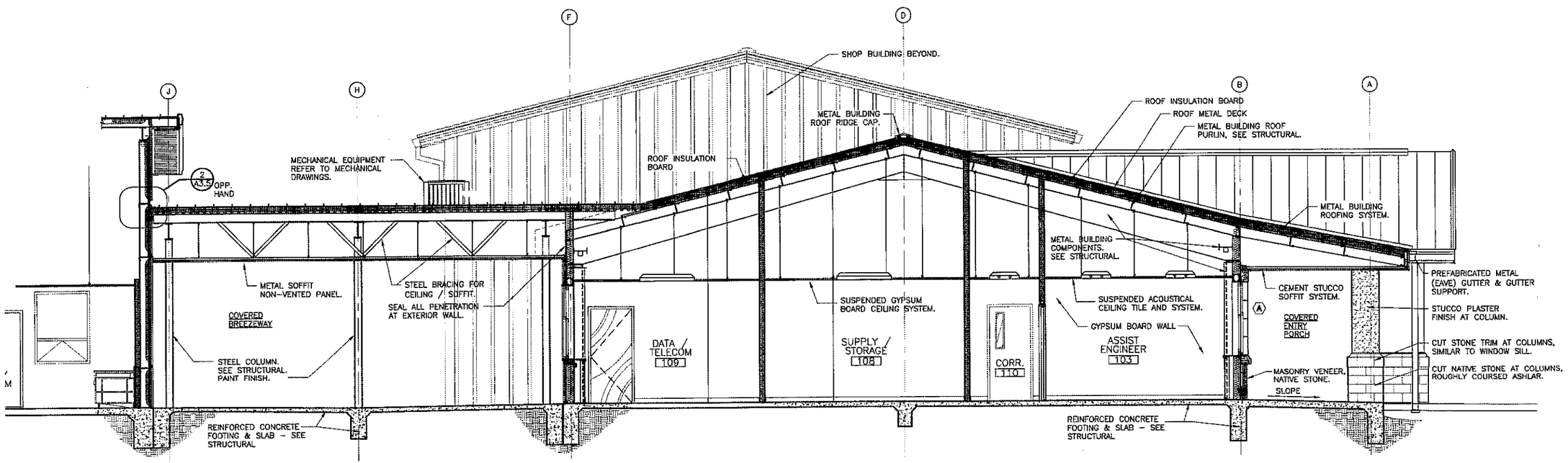

1 BUILDING SECTION - OFFICE
SCALE: 1/4" = 1'-0"

BUILDING SECTIONS

NOTE: THIS DRAWING WAS CREATED FOR PRODUCTION ON 22" x 34" SHEET SIZE. DO NOT SCALE PRINTS.

CADFILE: T:\WNTFWD14\AUS470400239\Acad\Arch\0239_A7.dwg Plotted: Tue, Mar. 22, 2005 @ 9:06 PM By: JTATE

Texas Department of Transportation
125 E. 11th Street
Austin, Texas 78701-2483
(512) 416-3048

Copyright © 2005 Texas Department of Transportation

REGISTERED ARCHITECT ROEL BAZAN 14288 STATE OF TEXAS
3/22/05

SOUTH TRAVIS AREA ENGINEER AND MAINTENANCE FACILITY
AUSTIN, TRAVIS COUNTY
AUSTIN DISTRICT 14

Revisions

Drawn by: JOT
Project No. 470400238
Date 03.23.2005
Sheet No.
A7.3
of sheets

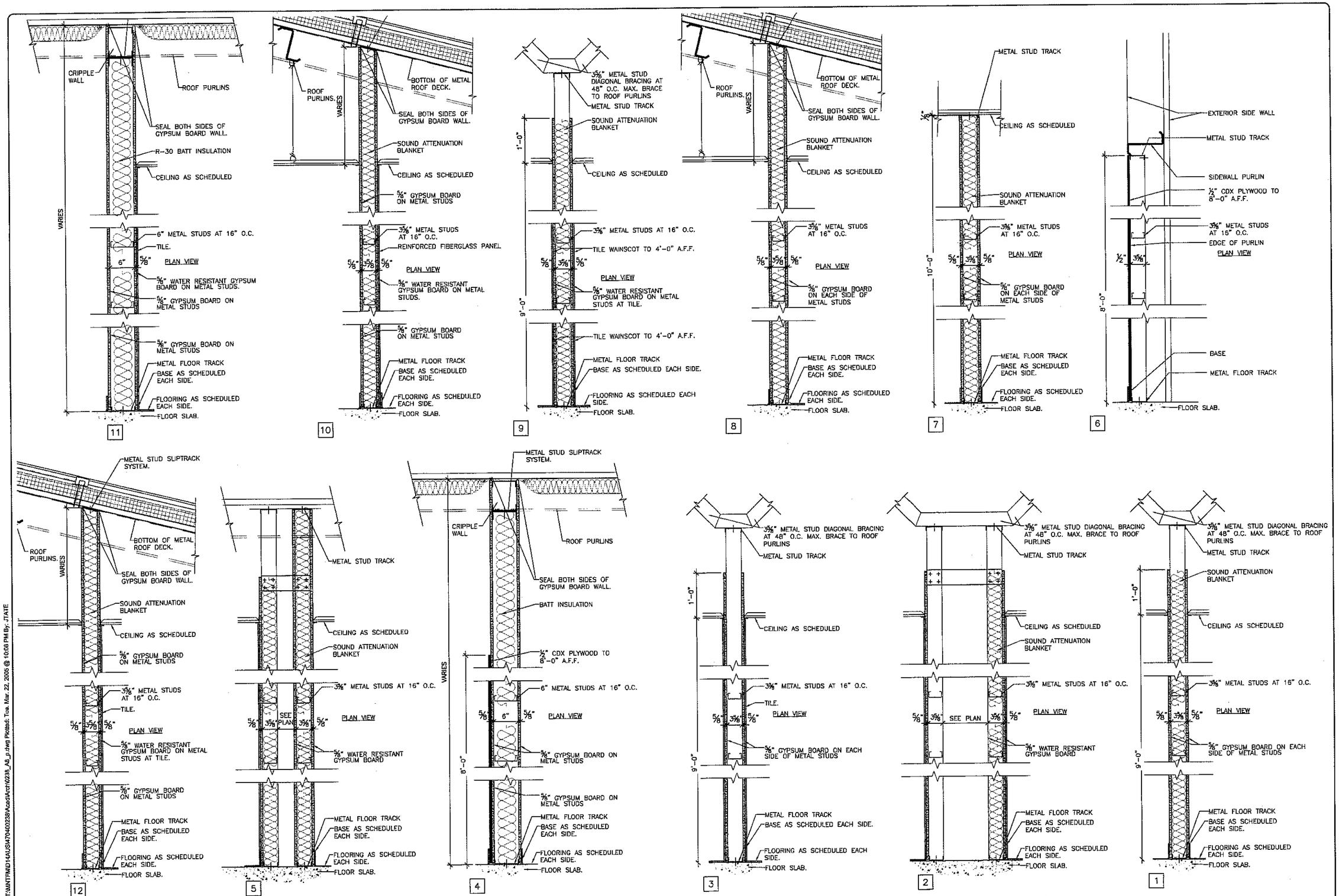

1 PARTITION TYPES
SCALE: 1" = 1'-0"

PARTITION TYPES

NOTE: THIS DRAWING WAS CREATED FOR PRODUCTION ON 22" x 34" SHEET SIZE. DO NOT SCALE PRINTS.

CADFILE: T:\MAINTFAND14\US470400238\Acad\Arch\0238_A8_p.dwg Plotted: Tue, Mar. 22, 2005 @ 10:08 PM By: JTATE

Texas Department of Transportation
125 E. 11th Street
Austin, Texas 78701-2483
(512) 416-3948

Copyright © 2005 Texas Department of Transportation

REGISTERED ARCHITECT
RIDEL BAZIM
14289
STATE OF TEXAS
3/23/05

SOUTH TRAVIS AREA ENGINEER AND MAINTENANCE FACILITY
AUSTIN, TRAVIS COUNTY
AUSTIN DISTRICT 14

Revisions

Drawn by: JOT
Project No. 470400238
Date 03.23.2005
Sheet No.
A8.1
of sheets

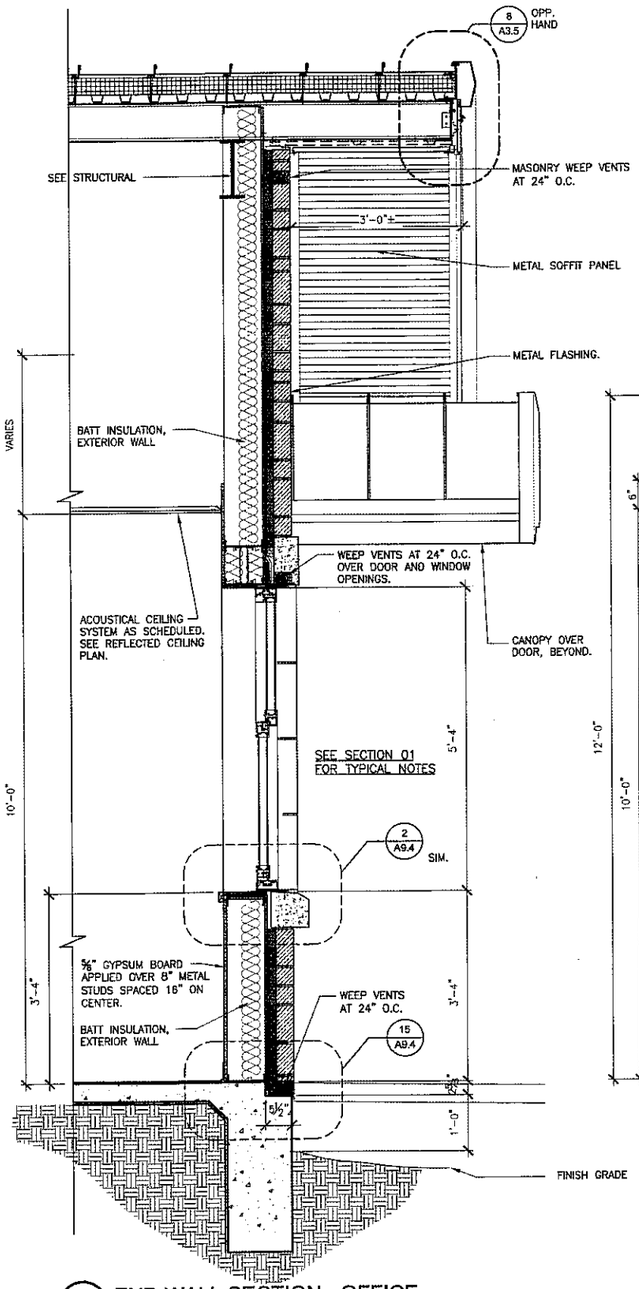

3 END WALL SECTION - OFFICE
SCALE: 3/4" = 1'-0"

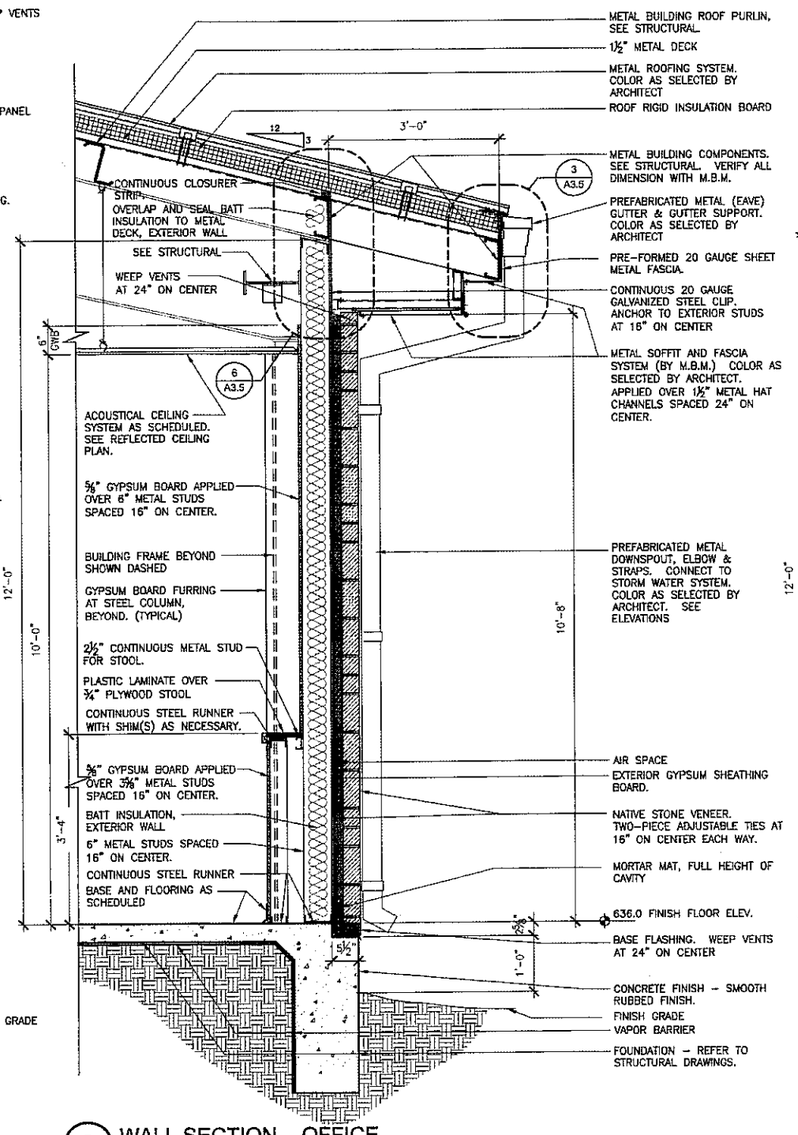

2 WALL SECTION - OFFICE
SCALE: 3/4" = 1'-0"

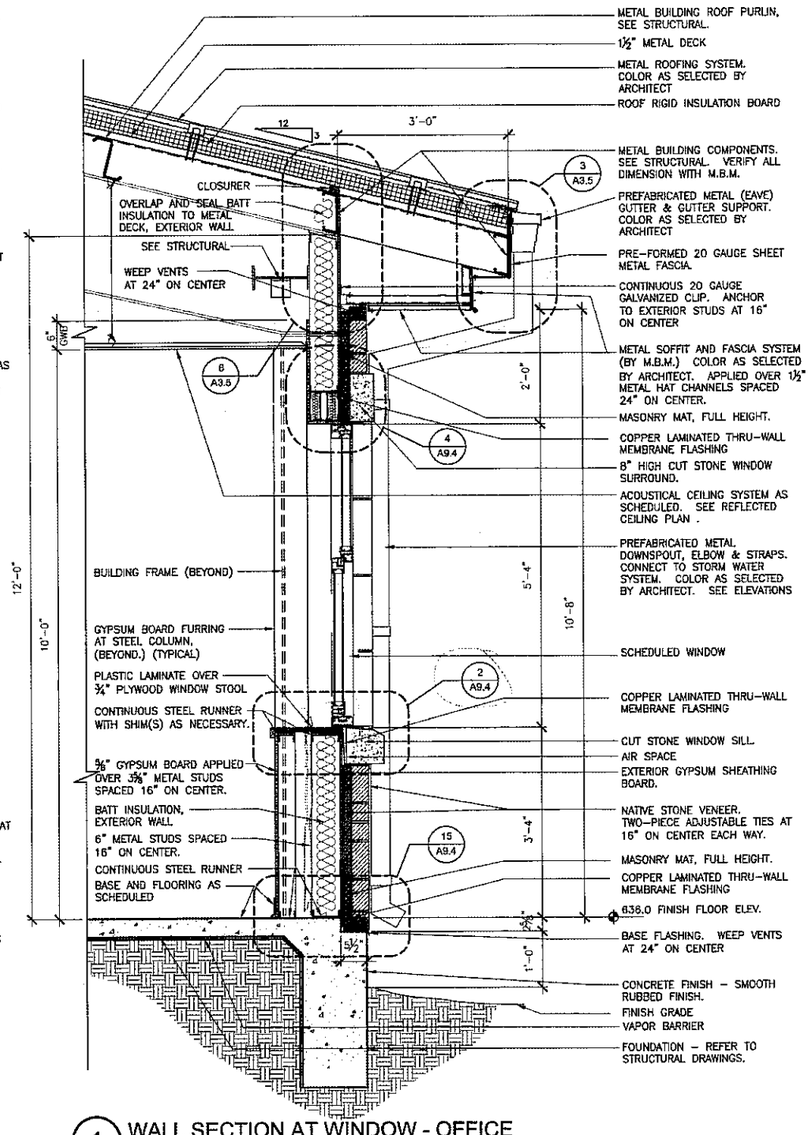

1 WALL SECTION AT WINDOW - OFFICE
SCALE: 3/4" = 1'-0"

WALL SECTIONS

NOTE: THIS DRAWING WAS CREATED FOR PRODUCTION ON 22" x 34" SHEET SIZE. DO NOT SCALE PRINTS.

CADFILE: T:\MNTFND14\US470400238\Acad\Arch\0238_A8.dwg Plotted: Tue, Mar. 22, 2005 @ 1:56 PM By: JTATE

Texas Department of Transportation
125 E. 11th Street
Austin, Texas 78701-2483
(512) 416-3048

Copyright © 2005 Texas Department of Transportation

REGISTERED ARCHITECT ROGER BAUMAN 14289 STATE OF TEXAS
3/23/05

SOUTH TRAVIS AREA ENGINEER AND MAINTENANCE FACILITY
AUSTIN, TRAVIS COUNTY
AUSTIN DISTRICT 14

Revisions
1
2
3
4

Drawn by: JOT
Project No. 470400238
Date 03.23.2005
Sheet No.
A8.2
of sheets

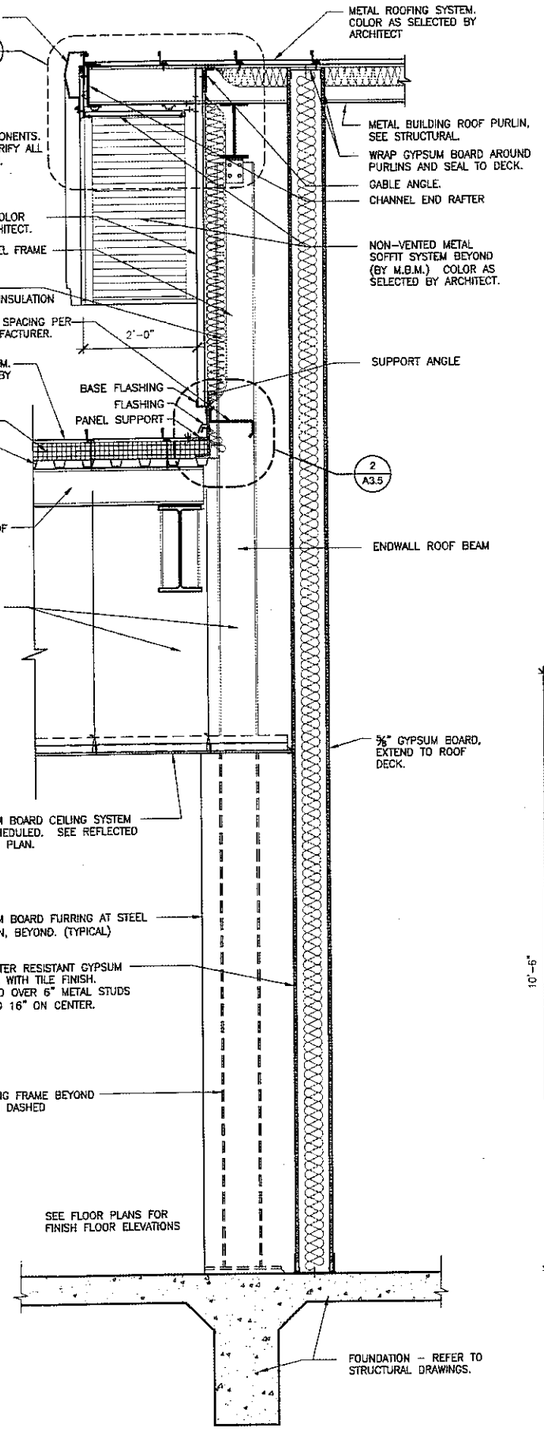

3 TYPICAL SECTION - SHOP
SCALE: 3/4" = 1'-0"

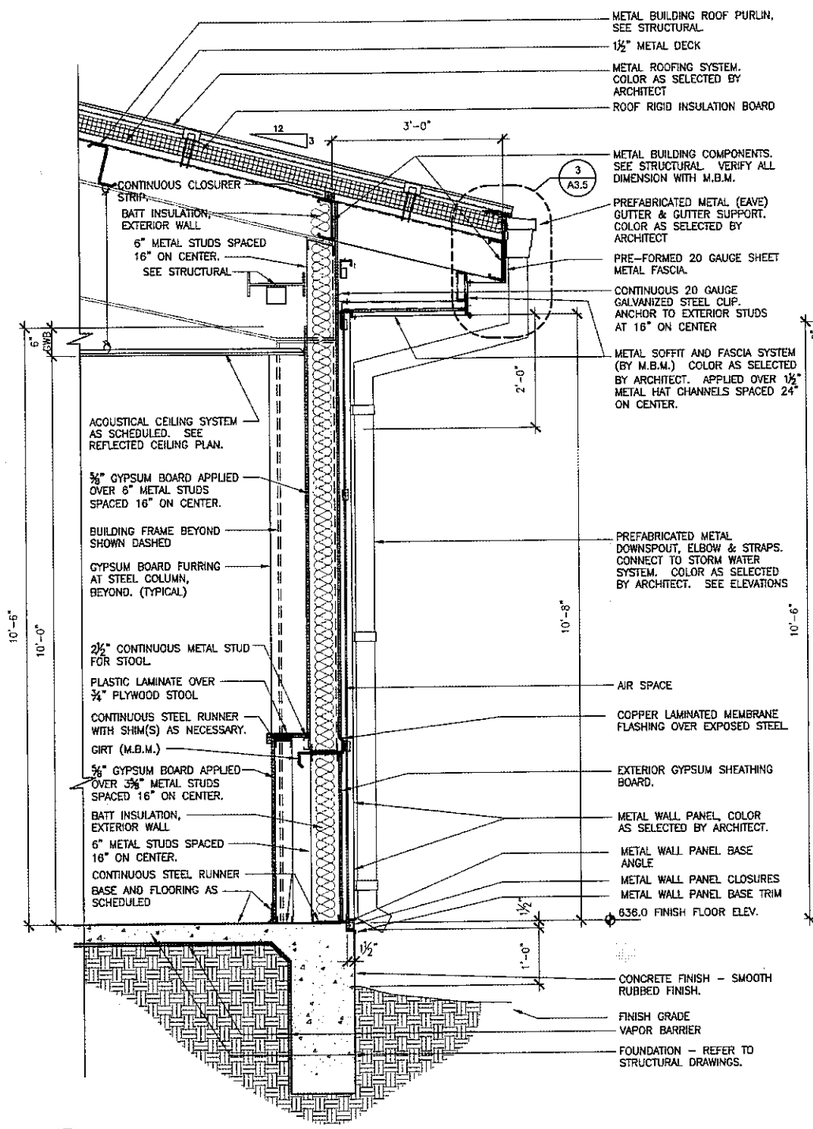

2 WALL SECTION - OFFICE
SCALE: 3/4" = 1'-0"

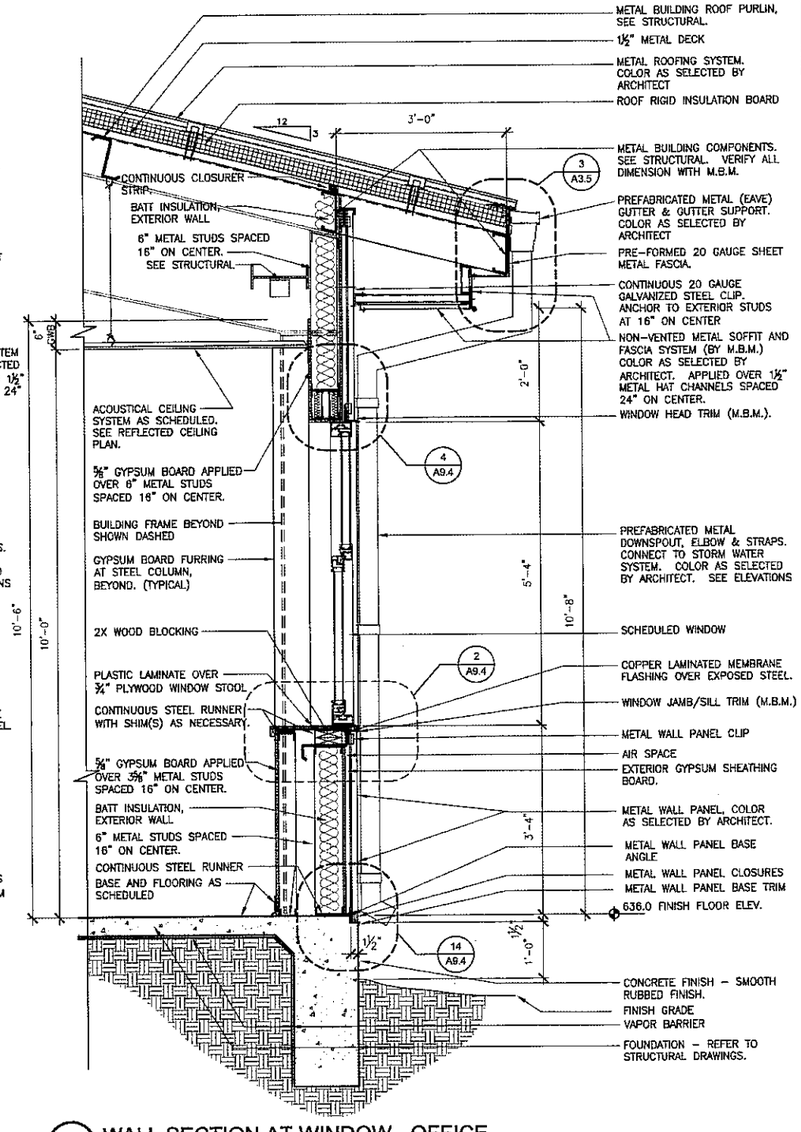

1 WALL SECTION AT WINDOW - OFFICE
SCALE: 3/4" = 1'-0"

WALL SECTIONS

NOTE: THIS DRAWING WAS CREATED FOR PRODUCTION 22"x 34" SHEET SIZE. DO NOT SCALE PRINTS.

CADFILE: T:\MNTF\MD14\US\470400238\Acad\Arch\0238_A8.dwg Protract: Tue, Mar. 22, 2005 @ 2:50 PM By: JTATE

Texas Department of Transportation
125 E. 11th Street
Austin, Texas 78701-2483
(512) 416-3948

Copyright © 2005 Texas Department of Transportation

REGISTERED ARCHITECT ROEL BAZAN 14269 STATE OF TEXAS
3/23/05

SOUTH TRAVIS AREA ENGINEER AND MAINTENANCE FACILITY
AUSTIN, TRAVIS COUNTY
AUSTIN DISTRICT 14

Revisions

Drawn by: JOT
Project No. 470400238
Date 03.23.2005
Sheet No.
A8.3
of sheets

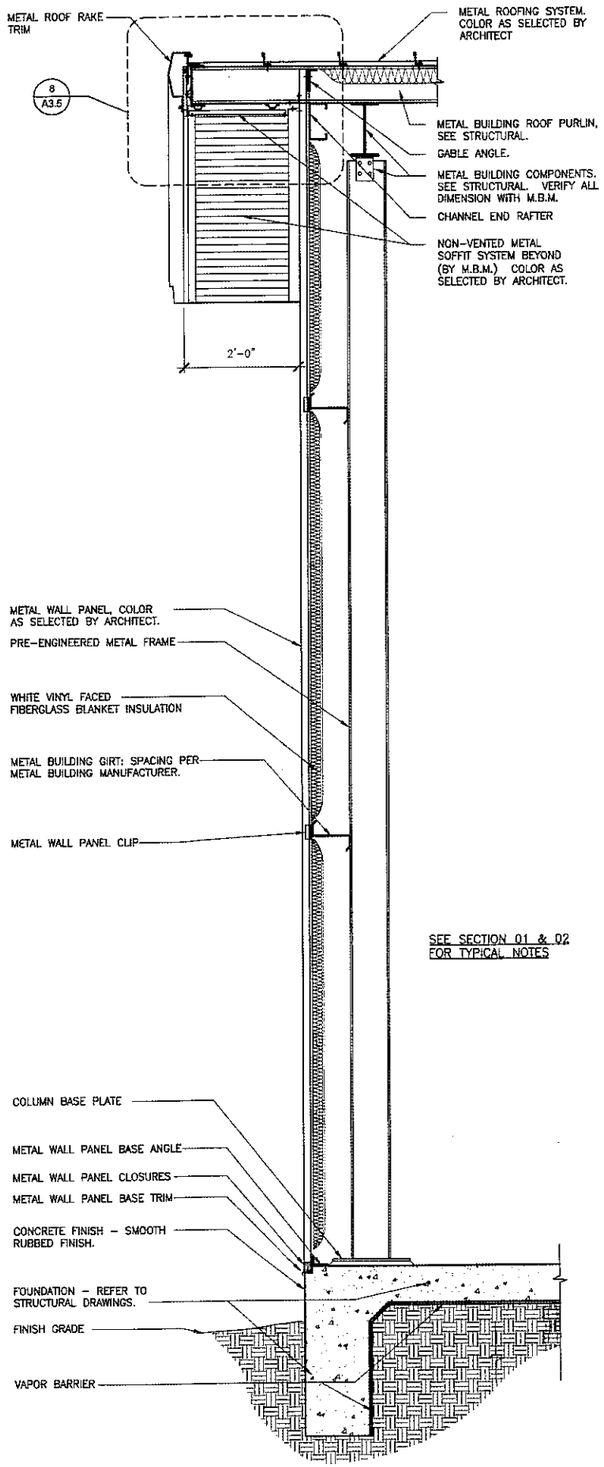

3 TYPICAL SECTION - SHOP
SCALE: 3/4" = 1'-0"

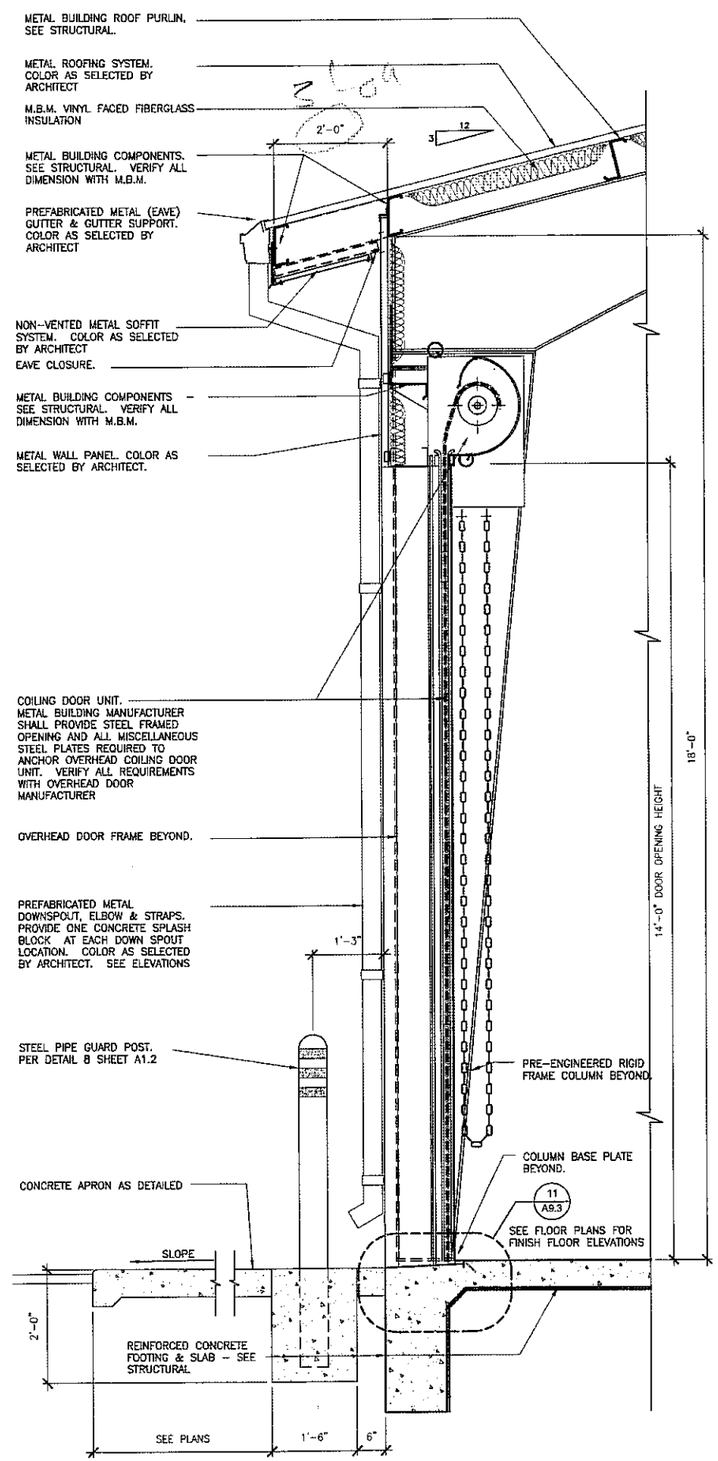

2 TYPICAL SECTION - SHOP
SCALE: 3/4" = 1'-0"

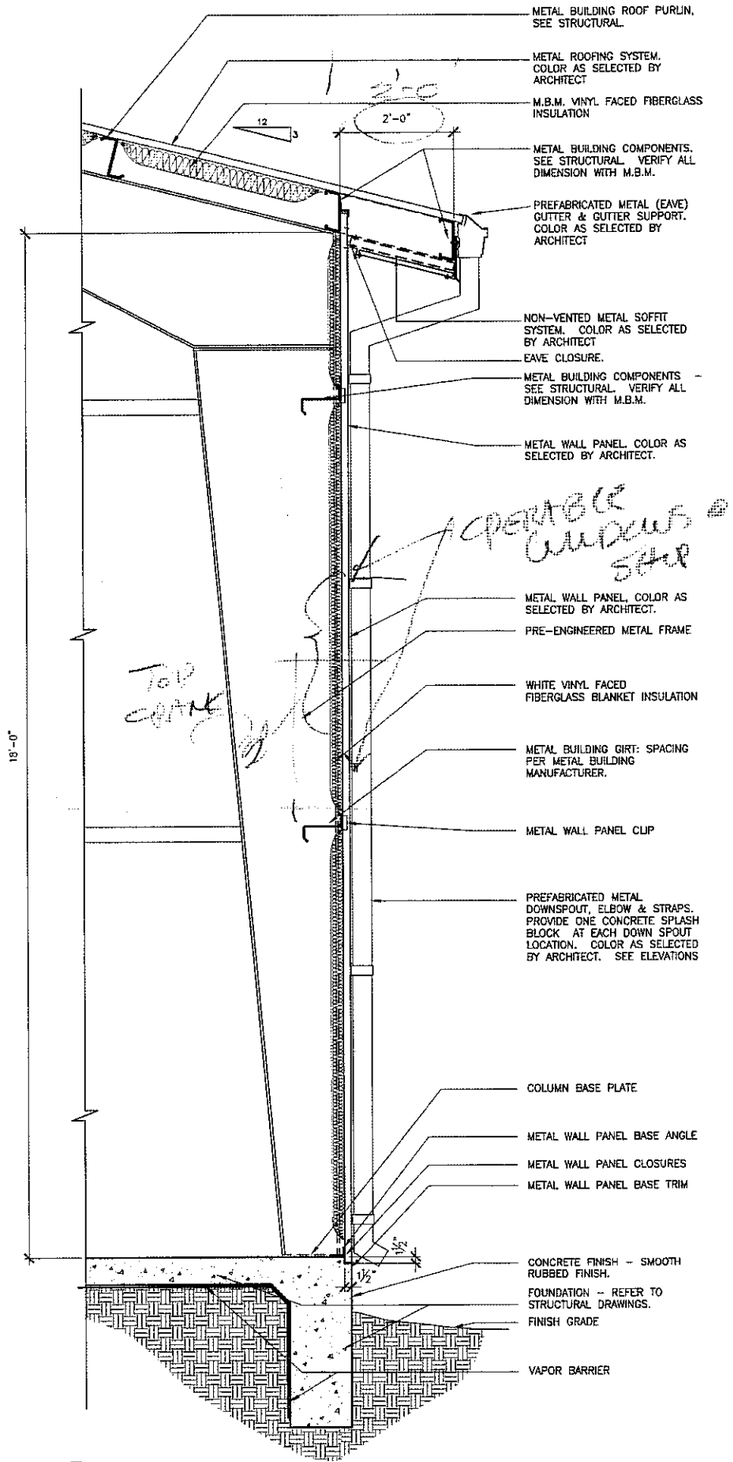

1 TYPICAL SECTION - SHOP
SCALE: 3/4" = 1'-0"

WALL SECTIONS

NOTE: THIS DRAWING WAS CREATED FOR PRODUCTION 22 in x 34" SHEET SIZE. DO NOT SCALE PRINTS.

Texas Department of Transportation
125 E. 11th Street
Austin, Texas 78701-2483
(512) 416-3048

Copyright © 2005 Texas Department of Transportation

REGISTERED ARCHITECT ROEL BAZAN-PEÑA 14288 STATE OF TEXAS
3/23/05

SOUTH TRAVIS AREA ENGINEER AND MAINTENANCE FACILITY
AUSTIN, TRAVIS COUNTY
AUSTIN DISTRICT 14

Revisions

Drawn by: JOT
Project No. 470400238
Date 03.23.2005
Sheet No.
A8.4
of sheets

CADFILE: T:\MNTFN\D14AUS\470\0238\Acad\Arch\0238_A8.dwg Plotted: Tue, Mar. 22, 2005 @ 3:13 PM By: JTATE

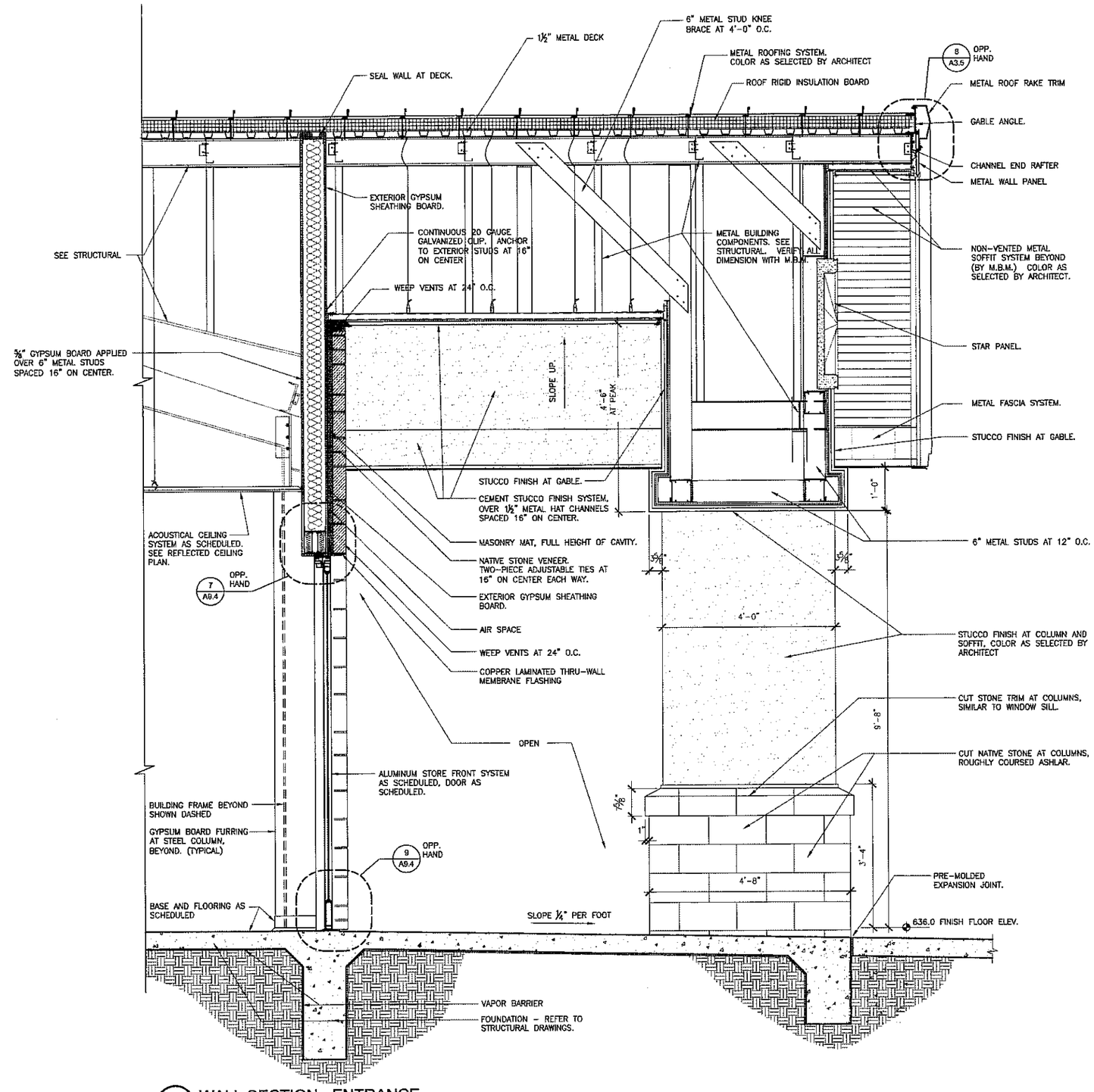

1 WALL SECTION - ENTRANCE
SCALE: 3/4" = 1'-0"

WALL SECTIONS

Texas Department of Transportation
125 E. 11th Street
Austin, Texas 78701-2483
(512) 416-3048
Copyright © 2005 Texas Department of Transportation

REGISTERED ARCHITECT ROEL BAZAN 14289 STATE OF TEXAS
3/23/05

SOUTH TRAVIS AREA ENGINEER AND MAINTENANCE FACILITY
AUSTIN, TRAVIS COUNTY
AUSTIN DISTRICT 14

Revisions

Drawn by: JOT
Project No. 470400238
Date 03.23.2005
Sheet No.
A8.5
of sheets

NOTE: THIS DRAWING WAS CREATED FOR PRODUCTION ON 22" x 34" SHEET SIZE. DO NOT SCALE PRINTS.

CADFILE: T:\MNTFMD14\MUSX470400238\Acad\Arch\0238_A8.dwg Plotted: Tue, Mar. 22, 2005 @ 10:09 PM By: JTATE

KEY TO ROOM FINISH SCHEDULE

FLOOR	BASE	WALLS	CEILING
F1 SEALED CONCRETE F2 12" X 12" VINYL COMPOSITION TILE F3 1" x 1" CERAMIC TILE F4 CARPET	B1 4" RUBBER BASE B2 NOT USED B3 CERAMIC TILE – COVED	W1 GYPSUM BOARD – PAINTED W2 2" x 2" GLAZED CERAMIC TILE (FULL HT.) W3 2" x 2" – 48" HT. GLAZED CERAMIC TILE WAINSCOT– PAINTED GYPSUM BOARD ABOVE W4 48" HT. FIBERGLASS REINFORCED PANEL (FRP) W5 PAINTED PLYWOOD TO 8' AFF W6 EXPOSED STRUCTURE	C1 2' x 2' ACOUSTICAL TILE C2 GYPSUM BOARD – PAINTED C3 EXPOSED STRUCTURE

SCHEDULE OF ROOM FINISHES

	ROOM NO.	ROOM NAME	FLOOR	BASE	WALLS NORTH	WALLS EAST	WALLS SOUTH	WALLS WEST	CEILING MTL.	CEILING HT.	REMARKS
OFFICE BUILDING / SHOP	101	RECEPTION	F 2	B 1	W 1	W 1	W 1	W 1	C 1	9'–0"	
	102	RECORD STORAGE	F 2	B 1	W 1	W 1	W 1	W 1	C 1	9'–0"	
	103	ASSISTANT ENGINEER	F 4	B 1	W 1	W 1	W 1	W 1	C 1	9'–0"	
	104	AREA ENGINEER	F 4	B 1	W 1	W 1	W 1	W 1	C 1	9'–0"	
	105	WORK AREA	F 2	B 1	W 1	W 1	W 1	W 1	C 1	10'–0"	
	106	ENGINEERING	F 4	B 1	W 1	W 1	W 1	W 1	C 1	10'–0"	
	107	CONFERENCE ROOM	F 4	B 1	W 1	W 1	W 1	W 1	C 1	10'–0"	NOTE 2
	108	SUPPLY / STORAGE	F 2	B 1	W 1	W 1	W 1	W 1	C 1	9'–0"	
	109	DATA / TELECOM	F 1	B 1	W 1	W 1	W 1	W 1	C 1	9'–0"	NOTE 1
	110	CORRIDOR	F 2	B 1	W 1	W 1	W 1	W 1	C 1	9'–0"	
	111	WOMEN	F 2	B 1	W 3	W 3	W 3	W 3	C 1	9'–0"	
	112	MEN	F 2	B 1	W 3	W 3	W 3	W 3	C 1	9'–0"	
	113	ELECTRICAL	F 2	B 1	W 1	W 1	W 1	W 1	C 1	9'–0"	
	114	MEETING ROOM	F 2	B 1	W 1	W 1	W 1	W 1	C 1	10'–0"	
	115	WOMEN	F 3	B 3	W 2	W 2	W 2	W 2	C 2	9'–0"	
	116	JANITOR	F 3	B 3	W 1	W 4	W4/W1	W 1	C 1	9'–0"	NOTE 3
	117	MEN	F 3	B 3	W 2	W 2	W 2	W 2	C 2	9'–0"	
	118	CORRIDOR	F 2	B 1	W 1	W 1	W 1	W 1	C 1	9'–0"	
	119	MAINTENANCE SUPERVISOR	F 4	B 1	W 1	W 1	W 1	W 1	C 1	9'–0"	
	120	ASSISTANT MAINTENANCE	F 4	B 1	W 1	W 1	W 1	W 1	C 1	9'–0"	
	121	STOCK ROOM	F 2	B 1	W 1	W 1	W 1	W 1	C 1	9'–0"	
	122	MAINTENANCE CREW	F 2	B 1	W 1	W 1	W 1	W 1	C 1	9'–0"	
	123	EQUIPMENT SHOP	F 1	B 1	W 1	W 5/6	W 5/6	W 5/6	C 3		
	124	SHOP STORAGE	F 2	B 1	W 1	W 6	W 1	W 1	C 3		
	125	CLOSET	F 1	B 1	W 1	W 1	W 1	W 1	C 1	8'–0"	
LABORATORY / STORAGE	130	LABORATORY	F 1	B 1	W 1	W 1	W 1	W 1	C 1	9'–0"	
	131	EXTRACTOR	F 1	B 1	W 1	W 1	W 1	W 1	C 1	9'–0"	
	132	DUST	F 1	B 1	W 1	W 1	W 1	W 1	C 1	9'–0"	
	133	SURVEY STORAGE	F 1	B 1	W 1	W 1	W 1	W 1	C 1	9'–0"	
	134	LABORATORY STORAGE	F 1	B 1	W 1	W 1	W 1	W 1	C 1	9'–0"	
	135	STORAGE	F 1	B 1	W 1	W 1	W 1	W 1	C 1	9'–0"	
	136	MATERIAL STORAGE	F 1	B 1	W 6	–	W 6	W 1	C 3		
	137	GENERAL STORAGE	F 1	B 1	W 6	W 6	W 6	–	C 3		
	138	RADIO ROOM	F 1	B 1	W 1	W 1	W 1	W 1	C 1	9'–0"	
STORAGE	140	EQUIPMENT STORAGE	F 1	B 1	W 6	W 6	W 6	W 6	C 3		

REMARK NOTES:

NOTE 1. INSTALL 1/2"x 4'x 8' PLYWOOD ON WALL 4' A.F.F. ON NORTH WALL. PROVIDE NECESSARY BLOCKING IN STUD WALLS TO SUPPORT PLYWOOD.

NOTE 2. PROVIDE BLOCKING IN STUD WALL @ 3' & 7' A.F.F. ON NORTH AND SOUTH WALL OF CONFERENCE ROOM 107 AND NORTH WALL OF MEETING ROOM 114.

NOTE 3. INSTALL REINFORCED FIBERGLASS PANEL (RFP- 4'x8') AS NOTED ON PLANS

FINISH SCHEDULE & DETAILS

NOTE: THIS DRAWING WAS CREATED FOR PRODUCTION ON 22" x 34" SHEET SIZE. DO NOT SCALE PRINTS.

Texas Department of Transportation
125 E. 11th Street
Austin, Texas 78701-2483
(512) 416-3948
Copyright © 2005 Texas Department of Transportation

REGISTERED ARCHITECT ADEL BAZAN 14269 STATE OF TEXAS
3/23/05

SOUTH TRAVIS AREA ENGINEER AND MAINTENANCE FACILITY
AUSTIN, TRAVIS COUNTY
AUSTIN DISTRICT 14

Revisions

Drawn by: JOT
Project No. 470400238
Date 03.23.2005
Sheet No.
A9.1
of sheets

CADFILE: T:\MNTFMD\14AUS\470400238\Acad\ArchN\238_A9_1.dwg Plotted: Wed, Mar. 23, 2005 @ 4:51 PM By: JTATE

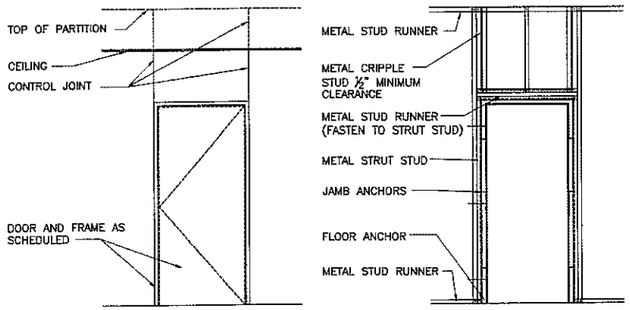

6 DOOR FRAMING
SCALE: N. T. S.

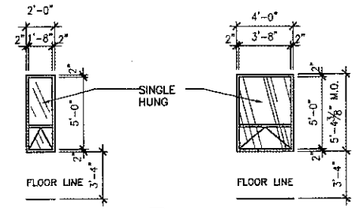

WINDOW TYPE (B)
ALUMINUM STORE FRONT SYSTEM (2" X 4½") WITH CLEAR ANODIZED FINISH.
GLAZE WITH 1" THICK, GREEN TINTED (OUTER PANE ONLY), TEMPERED, INSULATING GLASS.

WINDOW TYPE (A)
ALUMINUM STORE FRONT SYSTEM (2" X 4½") WITH CLEAR ANODIZED FINISH.
GLAZE WITH 1" THICK, GREEN TINTED (OUTER PANE ONLY), TEMPERED, INSULATING GLASS.

5 WINDOW TYPES
SCALE: N. T. S.

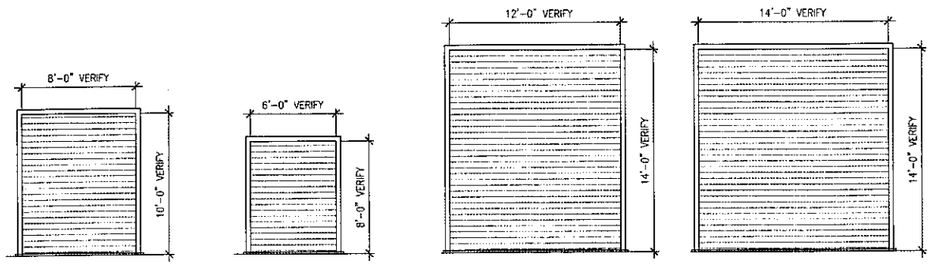

DOOR TYPE – OH4
2" THICK, STEEL, COILING DOOR (INSULATED), PAINT FINISH.

DOOR TYPE – OH3
2" THICK, STEEL, COILING DOOR (INSULATED), PAINT FINISH.

DOOR TYPE – OH2
2" THICK, STEEL, COILING DOOR (INSULATED), PAINT FINISH.

DOOR TYPE – OH1
2" THICK, STEEL, COILING DOOR (INSULATED), PAINT FINISH.

4 COILING DOOR TYPES
SCALE: N. T. S.

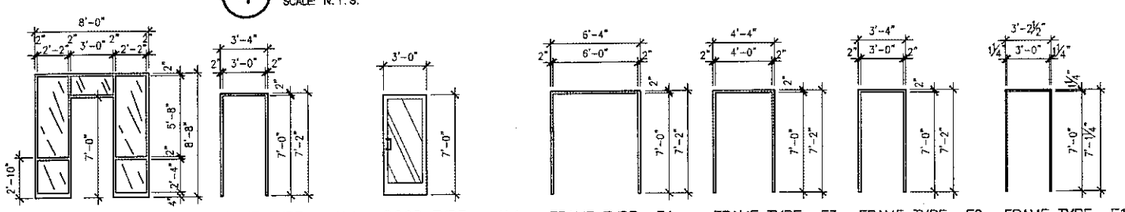

FRAME TYPE – AL2
ALUMINUM STORE FRONT SYSTEM (2" X 4½") WITH CLEAR ANODIZED FINISH.
GLAZE WITH 1" THICK, GREEN TINTED (OUTER PANE ONLY), TEMPERED, INSULATING GLASS.

FRAME TYPE – AL1
ALUMINUM STORE FRONT SYSTEM (2" X 4½") WITH CLEAR ANODIZED FINISH.

DOOR TYPE – AL1
1¾" THICK, ALUMINUM FRAME, MEDIUM STYLE DOOR WITH 10" HIGH BOTTOM RAIL – CLEAR ANODIZED FINISH.
GLAZE WITH ½" THICK, GREEN, TEMPERED PLATE GLASS.

FRAME TYPE F4
HOLLOW METAL FRAME.
PAINT FINISH.

FRAME TYPE F3
HOLLOW METAL FRAME.
PAINT FINISH.

FRAME TYPE F2
HOLLOW METAL FRAME.
PAINT FINISH.

FRAME TYPE F1
RED OAK WOOD FRAME.
STAIN AND VARNISH FINISH.

3 STORE FRONT SYSTEM
SCALE: N. T. S.

2 FRAME TYPES
SCALE: N. T. S.

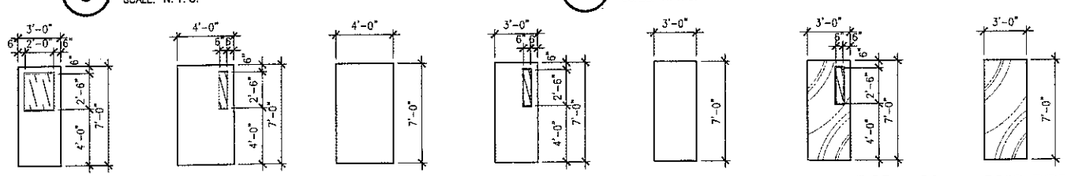

DOOR TYPE – D7
1¾" THICK, FLUSH, EXTRA HEAVY-DUTY, HOLLOW METAL DOOR.
PAINT FINISH.
FURNISH DOOR WITH ¼" THICK, CLEAR, GLASS VIEW LITE (6"WX24"H) IN METAL FRAME

DOOR TYPE – D6
1¾" THICK, FLUSH, EXTRA HEAVY-DUTY, HOLLOW METAL DOOR.
PAINT FINISH.
FURNISH DOOR WITH ¼" THICK, CLEAR, GLASS VIEW LITE (6"WX24"H) IN METAL FRAME

DOOR TYPE – D5
1¾" THICK, FLUSH, EXTRA HEAVY-DUTY, HOLLOW METAL DOOR.
PAINT FINISH.

DOOR TYPE – D4
1¾" THICK, FLUSH, EXTRA HEAVY-DUTY, HOLLOW METAL DOOR.
PAINT FINISH.
FURNISH DOOR WITH ¼" THICK, CLEAR, GLASS VIEW LITE (6"WX24"H) IN METAL FRAME

DOOR TYPE – D3
1¾" THICK, FLUSH, EXTRA HEAVY-DUTY, HOLLOW METAL DOOR.
PAINT FINISH.

DOOR TYPE – D2
1¾" THICK, FLUSH, SOLID CORE, PLAIN SLICED, RED OAK, VENEER DOOR.
STAIN AND VARNISH FINISH.
FURNISH DOOR WITH ¼" THICK, CLEAR, GLASS VIEW LITE (6"WX24"H) IN METAL FRAME

DOOR TYPE – D1
1¾" THICK, FLUSH, SOLID CORE, PLAIN SLICED, RED OAK, VENEER DOOR.
STAIN AND VARNISH FINISH.

1 DOOR TYPES
SCALE: N. T. S.

DOOR SCHEDULE

	DOOR NUMBER	DOOR SIZE	DOOR TYPE	DOOR MAT'L	FRAME TYPE	FRAME MAT'L	DETAILS HEAD	DETAILS JAMB	DETAILS SILL	FIRE RATE	HDWE SET	REMARKS
OFFICE BUILDING (SCREEN & GRIT BLASTS BUILDING)	101	3'-0" X 7'-0" X 1 3/4"	ALD1	ALUM.	ALF2	ALUM.	11/A9.4	11/A9.4	9/A9.4		1	NOTE 1
	102	3'-0" X 7'-0" X 1 3/4"	D1	WOOD	F1	WOOD	10/A9.3	9/A9.3			6	
	103	3'-0" X 7'-0" X 1 3/4"	D1	WOOD	F1	WOOD	10/A9.3	9/A9.3			2	
	104	3'-0" X 7'-0" X 1 3/4"	D1	WOOD	F1	WOOD	10/A9.3	9/A9.3			2	
	105	3'-0" X 7'-0" X 1 3/4"	D1	WOOD	F1	WOOD	10/A9.3	9/A9.3			4	
	106A	3'-0" X 7'-0" X 1 3/4"	D2	WOOD	F1	WOOD	10/A9.3	9/A9.3			6	
	106B	3'-0" X 7'-0" X 1 3/4"	D4	H. M.	F2	H. M.	3/A9.3	2/A9.3	1/A9.3		5	NOTE 1
	106C	3'-0" X 7'-0" X 1 3/4"	D4	H. M.	F2	H. M.	16/A9.3	15/A9.3	11/A9.3		2	
	107	3'-0" X 7'-0" X 1 3/4"	D1	WOOD	F1	WOOD	10/A9.3	9/A9.3			2	
	108	3'-0" X 7'-0" X 1 3/4"	D1	WOOD	F1	WOOD	10/A9.3	9/A9.3			6	
	109	3'-0" X 7'-0" X 1 3/4"	D1	WOOD	F1	WOOD	10/A9.3	9/A9.3			4	
	110	3'-0" X 7'-0" X 1 3/4"	D4	H. M.	F2	H. M.	3/A9.3	2/A9.3	1/A9.3		5	NOTE 1
	111	3'-0" X 7'-0" X 1 3/4"	D1	WOOD	F1	WOOD	10/A9.3	9/A9.3			3	
	112	3'-0" X 7'-0" X 1 3/4"	D1	WOOD	F1	WOOD	10/A9.3	9/A9.3			3	
	113	3'-0" X 7'-0" X 1 3/4"	D1	WOOD	F1	WOOD	10/A9.3	9/A9.3			4	NOTE 2
	114A	3'-0" X 7'-0" X 1 3/4"	D1	WOOD	F1	WOOD	10/A9.3	9/A9.3			2	
	114B	3'-0" X 7'-0" X 1 3/4"	D4	H. M.	F2	H. M.	3/A9.3	2/A9.3	1/A9.3		5	NOTE 1
	115	3'-0" X 7'-0" X 1 3/4"	D1	WOOD	F1	WOOD	10/A9.3	9/A9.3			3	
	116	3'-0" X 7'-0" X 1 3/4"	D1	WOOD	F1	WOOD	10/A9.3	9/A9.3			6	NOTE 2
	117	3'-0" X 7'-0" X 1 3/4"	D1	WOOD	F1	WOOD	10/A9.3	9/A9.3			3	
	118	–	–	–	–	–	–	–			–	NOT USED
	119	3'-0" X 7'-0" X 1 3/4"	D1	WOOD	F1	WOOD	10/A9.3	9/A9.3			2	
	120	3'-0" X 7'-0" X 1 3/4"	D1	WOOD	F1	WOOD	10/A9.3	9/A9.3			2	
	121	3'-0" X 7'-0" X 1 3/4"	D1	WOOD	F1	WOOD	10/A9.3	9/A9.3			6	
	122	3'-0" X 7'-0" X 1 3/4"	D1	WOOD	F1	WOOD	10/A9.3	9/A9.3			2	
	123A	3'-0" X 7'-0" X 1 3/4"	D4	H.M.	F2	H.M.	8/A9.3	7/A9.3			6	
	123B	14'-0" x 14'-0" x 2"	OH1	STEEL		STEEL	12/A9.3	11/A9.3			7	
	123C	14'-0" x 14'-0" x 2"	OH1	STEEL		STEEL	12/A9.3	11/A9.3			7	
	123D	3'-0" X 7'-0" X 1 3/4"	D3	H.M.	F2	H.M.	16/A9.3	15/A9.3	4/A9.3		5	
	124A	PAIR 3'-0" X 7'-0" X 1 3/4"	D3	H.M.	F4	H.M.	8/A9.3	7/A9.3			8	
	124B	8'-0" x 10'-0" x 2"	OH4	STEEL		STEEL	16/A9.3	15/A9.3			7	
LAB / STORAGE	130A	4'-0" X 7'-0" X 1 3/4"	D6	H.M.	F3	H.M.	16/A9.3	15/A9.3	4/A9.3		5	
	130B	4'-0" X 7'-0" X 1 3/4"	D6	H.M.	F3	H.M.	16/A9.3	15/A9.3	4/A9.3		5	
	131	3'-0" X 7'-0" X 1 3/4"	D3	H.M.	F2	H.M.	6/A9.3	5/A9.3			9	
	132	3'-0" X 7'-0" X 1 3/4"	D3	H.M.	F2	H.M.	6/A9.3	5/A9.3			9	
	133	3'-0" X 7'-0" X 1 3/4"	D3	H.M.	F2	H.M.	6/A9.3	5/A9.3			9	
	134A	4'-0" X 7'-0" X 1 3/4"	D5	H.M.	F3	H.M.	6/A9.3	5/A9.3			9	
	134B	6'-0" x 6'-0" x 2"	OH3	STEEL		STEEL	12/A9.3	11/A9.3			7	
	135	(2) 3'-0" X 7'-0" X 1 3/4"	D3	H.M.	F4	H.M.	8/A9.3	5/A9.3			8	
	136	3'-0" X 7'-0" X 1 3/4"	D3	H.M.	F2	H.M.	16/A9.3	15/A9.3	4/A9.3		5	
	137A	12'-0" x 14'-0" x 2"	OH2	STEEL		STEEL	12/A9.3	11/A9.3			7	
	137B	14'-0" x 14'-0" x 2"	OH1	STEEL		STEEL	12/A9.3	11/A9.3			7	
	137C	3'-0" X 7'-0" X 1 3/4"	D3	H.M.	F2	H.M.	16/A9.3	15/A9.3	4/A9.3		5	
	138	3'-0" X 7'-0" X 1 3/4"	D3	H.M.	F2	H.M.	6/A9.3	5/A9.3			2	
VEHICLE STORAGE	140A	4'-0" X 7'-0" X 1 3/4"	D6	H.M.	F3	H.M.	16/A9.3	15/A9.3	4/A9.3		5	
	140B	14'-0" x 14'-0" x 2"	OH1	STEEL		STEEL	12/A9.3	11/A9.3			2	
	140C	14'-0" x 14'-0" x 2"	OH1	STEEL		STEEL	12/A9.3	11/A9.3			7	
	140D	14'-0" x 14'-0" x 2"	OH1	STEEL		STEEL	12/A9.3	11/A9.3			7	
	140E	14'-0" x 14'-0" x 2"	OH1	STEEL		STEEL	12/A9.3	11/A9.3			7	
	140F	14'-0" x 14'-0" x 2"	OH1	STEEL		STEEL	12/A9.3	11/A9.3			7	
	140G	14'-0" x 14'-0" x 2"	OH1	STEEL		STEEL	12/A9.3	11/A9.3			7	
	140H	14'-0" x 14'-0" x 2"	OH1	STEEL		STEEL	12/A9.3	11/A9.3			7	
	140J	14'-0" x 14'-0" x 2"	OH1	STEEL		STEEL	12/A9.3	11/A9.3			7	
	140K	14'-0" x 14'-0" x 2"	OH1	STEEL		STEEL	12/A9.3	11/A9.3			7	
	140L	3'-0" X 7'-0" X 1 3/4"	D3	H.M.	F2	H.M.	16/A9.3	15/A9.3	4/A9.3		5	

REMARK NOTES:

1. 1/2" THRESHOLD WEATHER STRIPING AND DOOR SWEEP
2. UNDERCUT DOOR 1"

DOOR SCHEDULE - DOOR & WINDOW TYPES

Texas Department of Transportation
125 E. 11th Street
Austin, Texas 78701-2483
(512) 416-3948
Copyright © 2005 Texas Department of Transportation

REGISTERED ARCHITECT NOEL BAZAN 14289 STATE OF TEXAS
3/23/05

SOUTH TRAVIS AREA ENGINEER AND MAINTENANCE FACILITY
AUSTIN, TRAVIS COUNTY
AUSTIN DISTRICT 14

Revisions

Drawn by: JOT
Project No. 470400238
Date 03.23.2005
Sheet No.
A9.2
of sheets

NOTE: THIS DRAWING WAS CREATED FOR PRODUCTION ON 22" x 34" SHEET SIZE. DO NOT SCALE PRINTS.

CADFILE: T:\MNTFR\ID14\AUS\470400238\Acad\Arch\0238_A9_2.dwg Plotted: Tue, Mar. 22, 2005 @ 10:10 PM By: JTATE

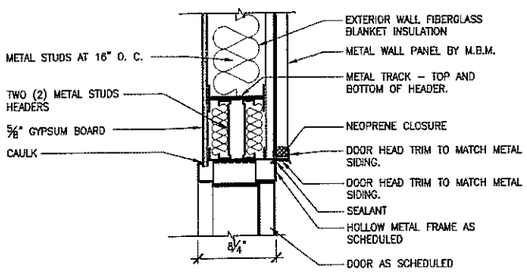

16 EXTERIOR DOOR HEAD
SCALE: 1 -1/2"= 1'-0"

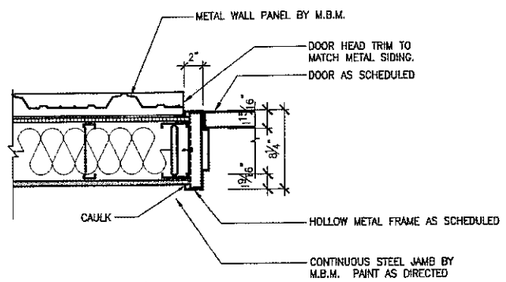

15 EXTERIOR DOOR JAMB
SCALE: 1 -1/2"= 1'-0"

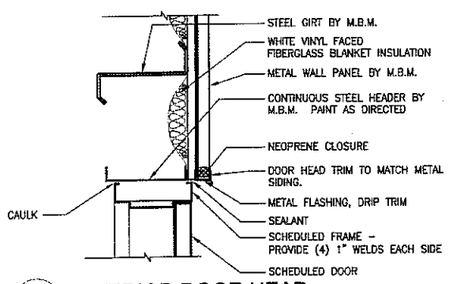

14 EXTERIOR DOOR HEAD
SCALE: 1 -1/2"= 1'-0"

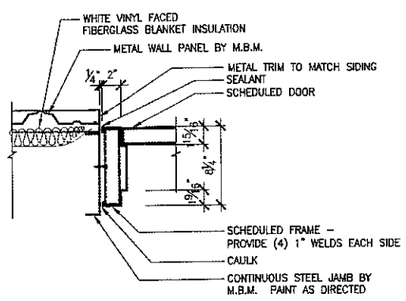

13 EXTERIOR DOOR JAMB
SCALE: 1 -1/2"= 1'-0"

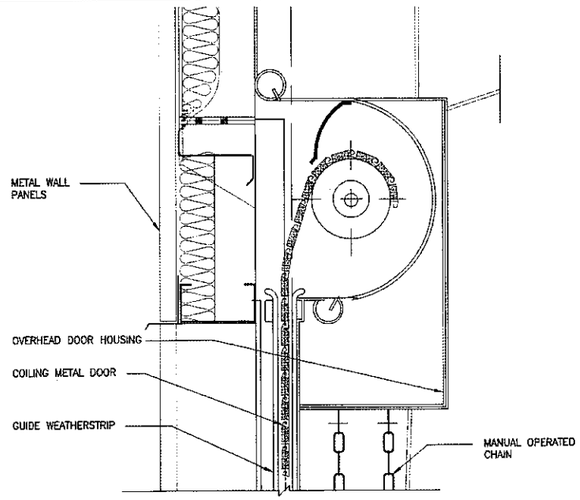

12 COILING DOOR HEAD
SCALE: 1 -1/2"= 1'-0"

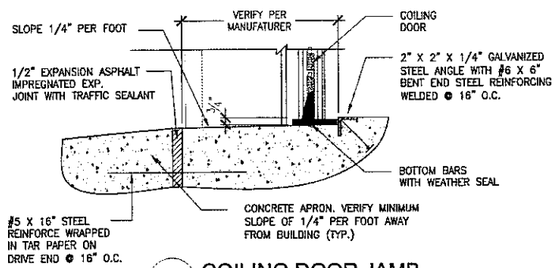

11 COILING DOOR JAMB
SCALE: 1 -1/2"= 1'-0"

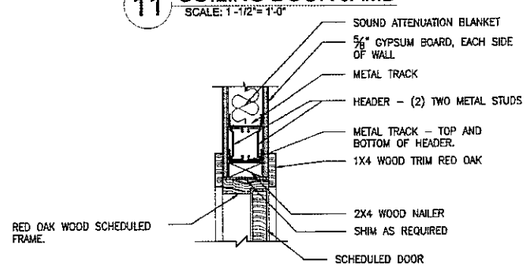

10 INTERIOR DOOR HEAD
SCALE: 1 -1/2"= 1'-0"

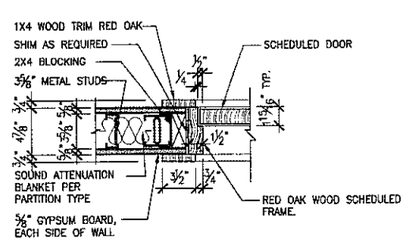

9 INTERIOR DOOR JAMB
SCALE: 1 -1/2"= 1'-0"

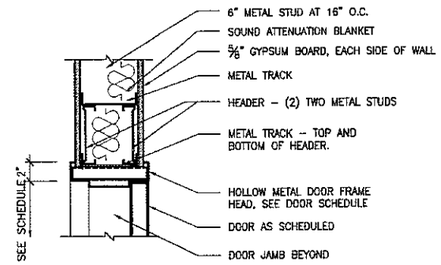

8 INTERIOR DOOR HEAD
SCALE: 1 -1/2"= 1'-0"

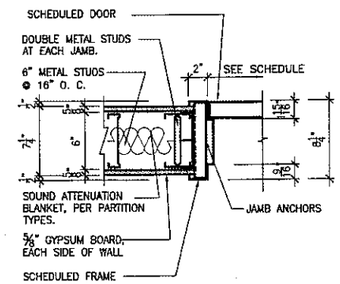

7 INTERIOR DOOR JAMB
SCALE: 1 -1/2"= 1'-0"

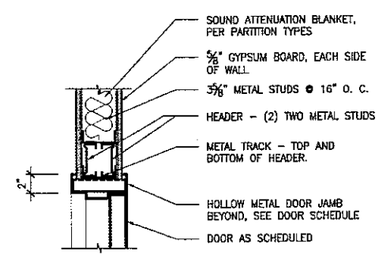

6 INTERIOR DOOR HEAD
SCALE: 1 -1/2"= 1'-0"

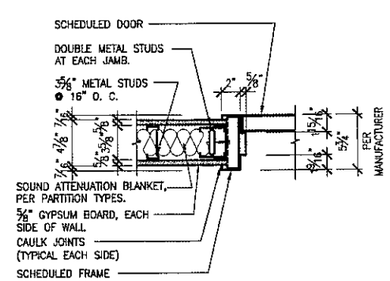

5 INTERIOR DOOR JAMB
SCALE: 1 -1/2"= 1'-0"

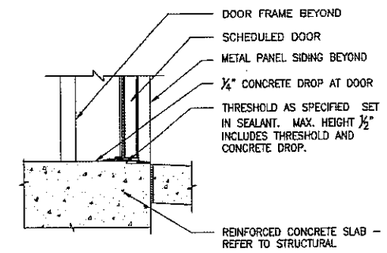

4 EXTERIOR DOOR SILL
SCALE: 1 -1/2"= 1'-0"

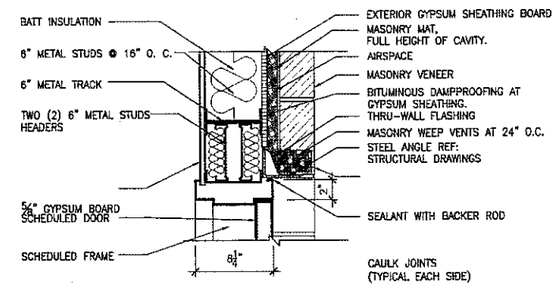

3 EXTERIOR DOOR HEAD
SCALE: 1 -1/2"= 1'-0"

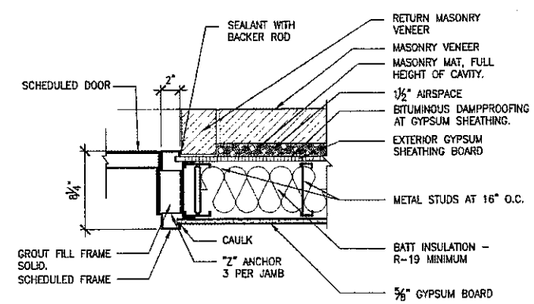

2 EXTERIOR DOOR JAMB
SCALE: 1 -1/2"= 1'-0"

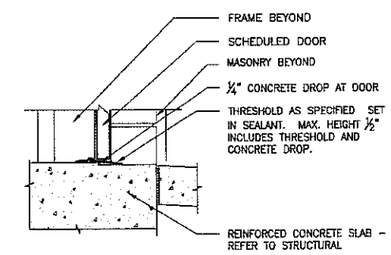

1 EXTERIOR DOOR SILL
SCALE: 1 -1/2"= 1'-0"

DOOR DETAILS

Texas Department of Transportation
125 E. 11th Street
Austin, Texas 78701-2483
(512) 416-3048
Copyright © 2005 Texas Department of Transportation

REGISTERED ARCHITECT ROEL BAZAN 14289 STATE OF TEXAS
3/23/05

SOUTH TRAVIS AREA ENGINEER AND MAINTENANCE FACILITY
AUSTIN, TRAVIS COUNTY
AUSTIN DISTRICT 14

Revisions

Drawn by: JOT
Project No. 470400238
Date 03.23.2005
Sheet No.
A9.3
of sheets

CADFILE: T:\MNTFM\D14\AUS\470400238\Acad\Arch\0238_A9_3.dwg Plotted: Tue, Mar 22, 2005 @ 3:30 PM By: JTATE

NOTE: THIS DRAWING WAS CREATED FOR PRODUCTION ON 22" x 34" SHEET SIZE. DO NOT SCALE PRINTS.

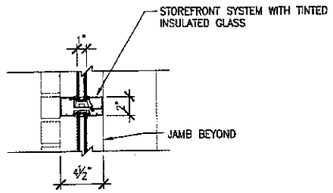

16 WINDOW MULLION DETAIL
SCALE: 1-1/2" = 1'-0"

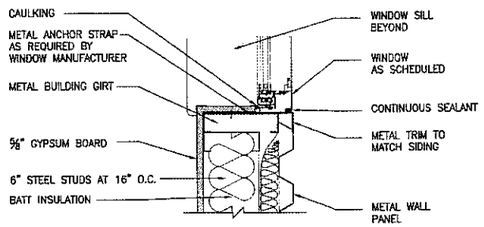

12 WINDOW JAMB
SCALE: 1-1/2" = 1'-0"

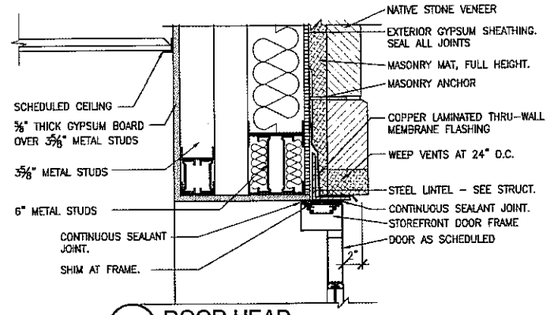

8 DOOR HEAD
SCALE: 1-1/2" = 1'-0"

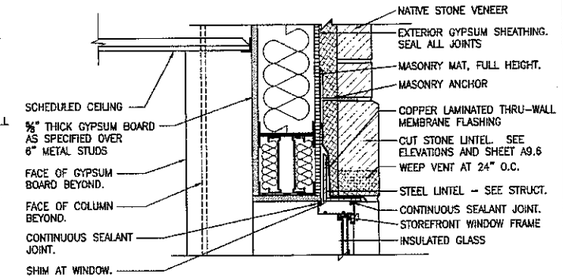

4 WINDOW HEAD
SCALE: 1-1/2" = 1'-0"

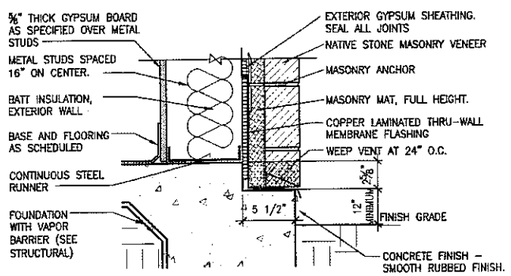

15 MASONRY BASE DETAIL
SCALE: 1-1/2" = 1'-0"

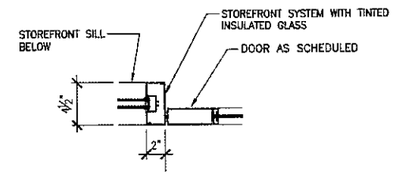

11 DOOR JAMB / HEAD SIMILAR
SCALE: 1-1/2" = 1'-0"

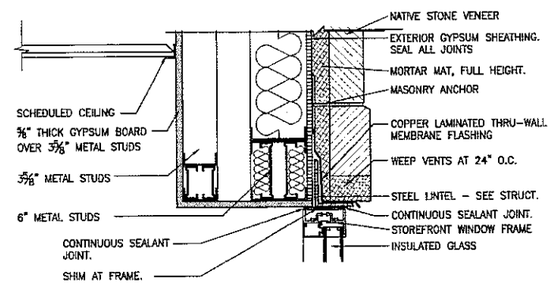

7 WINDOW HEAD
SCALE: 1-1/2" = 1'-0"

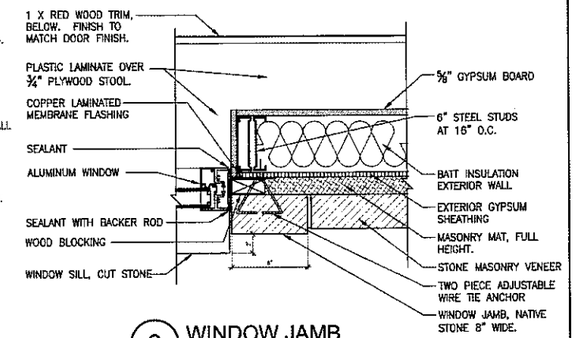

3 WINDOW JAMB
SCALE: 1-1/2" = 1'-0"

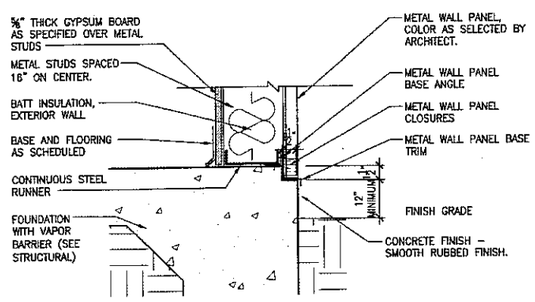

14 METAL SIDING BASE DETAIL
SCALE: 1-1/2" = 1'-0"

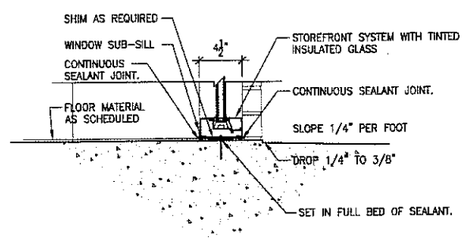

10 WINDOW SILL
SCALE: 1-1/2" = 1'-0"

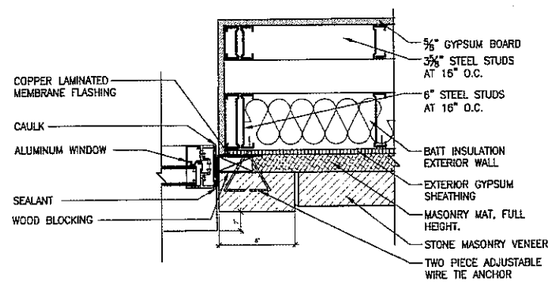

6 WINDOW JAMB
SCALE: 1-1/2" = 1'-0"

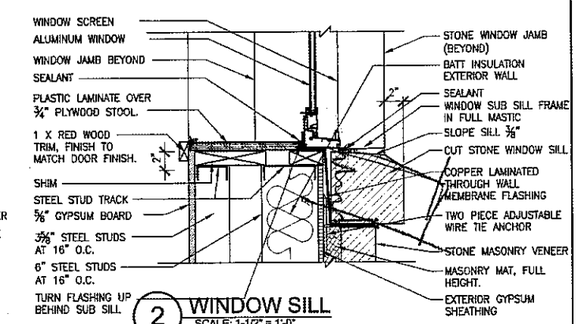

2 WINDOW SILL
SCALE: 1-1/2" = 1'-0"

13 NOT USED
SCALE: -

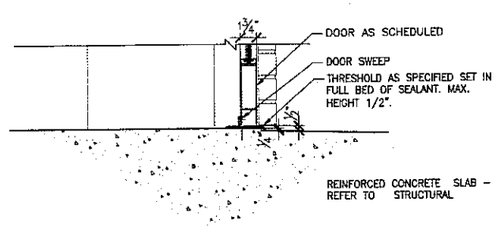

9 DOOR SILL
SCALE: 1-1/2" = 1'-0"

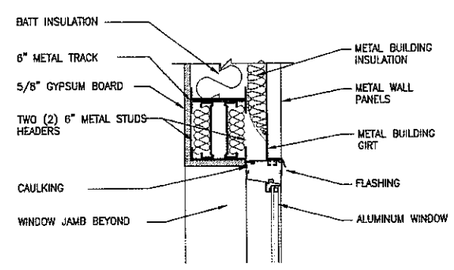

5 EXTERIOR DOOR HEAD
SCALE: 1-1/2" = 1'-0"

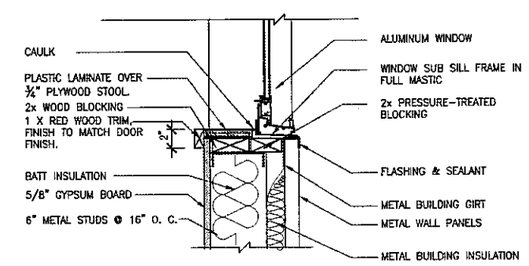

1 WINDOW SILL
SCALE: 1-1/2" = 1'-0"

WINDOW AND DOOR DETAILS

Texas Department of Transportation
125 E. 11th Street
Austin, Texas 78701-2483
(512) 416-3048
Copyright © 2005 Texas Department of Transportation

REGISTERED ARCHITECT JOEL BAZAN 14289 STATE OF TEXAS
3/23/05

SOUTH TRAVIS AREA ENGINEER AND MAINTENANCE FACILITY
AUSTIN, TRAVIS COUNTY
AUSTIN DISTRICT 14

Revisions

Drawn by: JOT
Project No. 470400238
Date 03.23.2005
Sheet No.
A9.4
of sheets

NOTE: THIS DRAWING WAS CREATED FOR PRODUCTION ON 22" x 34" SHEET SIZE. DO NOT SCALE PRINTS.

CADFILE: T:\WNTFMD14\AUS\470400238\Acad\Arch\0238_A9_3.dwg Plotted: Tue, Mar. 22, 2005 @ 10:28 PM By: JTATE

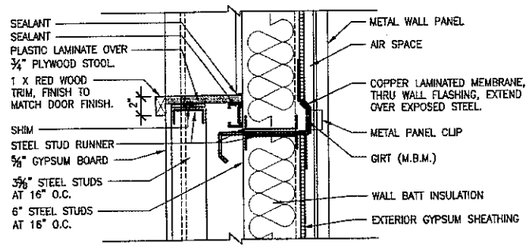

12 SILL SECTION DETAIL
SCALE: 1 -1/2"= 1'-0"

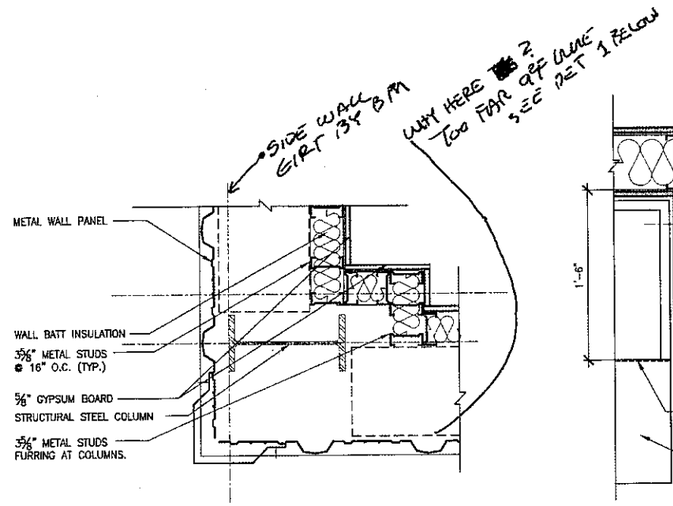

9 PLAN DETAIL
SCALE: 1 -1/2"= 1'-0"

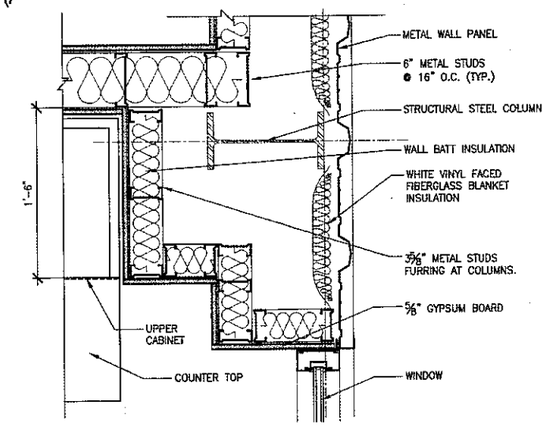

6 PLAN DETAIL
SCALE: 1 -1/2"= 1'-0"

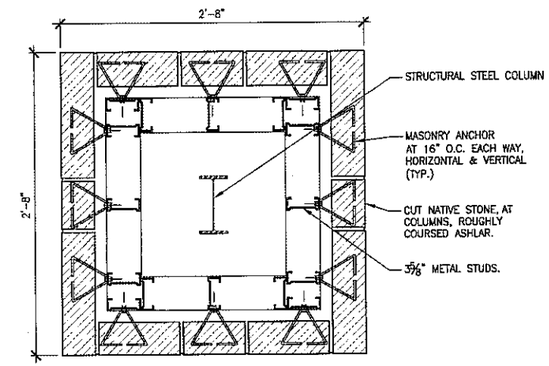

3 PLAN DETAIL
SCALE: 1 -1/2"= 1'-0"

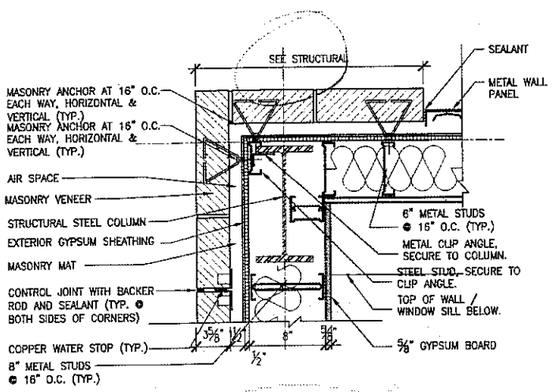

11 PLAN DETAIL
SCALE: 1 -1/2"= 1'-0"

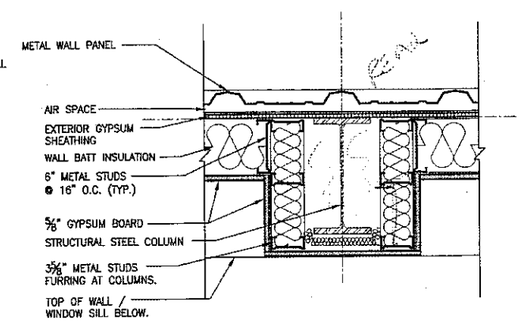

8 PLAN DETAIL
SCALE: 1 -1/2"= 1'-0"

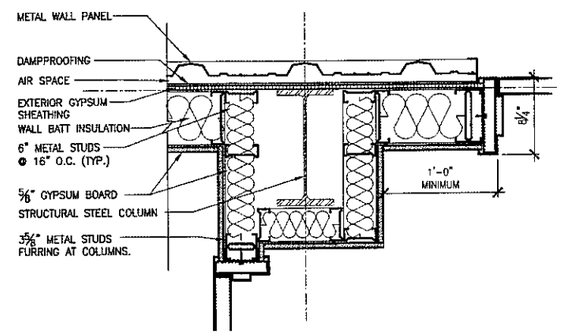

5 PLAN DETAIL
SCALE: 1 -1/2"= 1'-0"

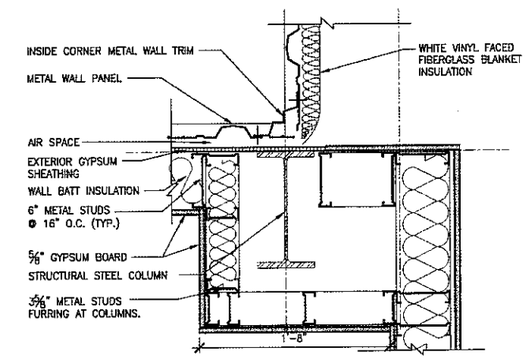

2 PLAN DETAIL
SCALE: 1 -1/2"= 1'-0"

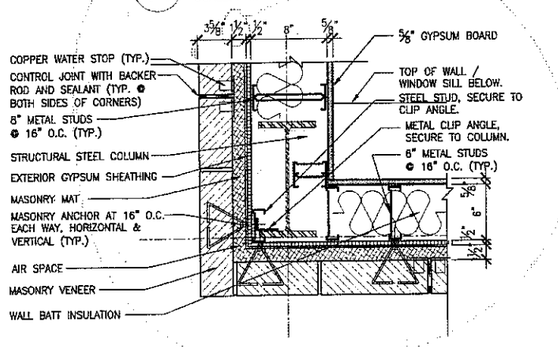

10 PLAN DETAIL
SCALE: 1 -1/2"= 1'-0"

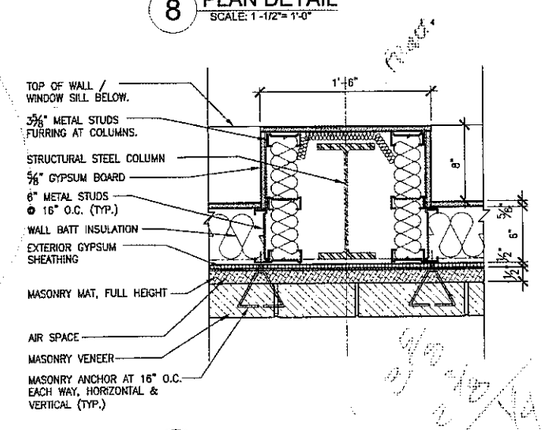

7 PLAN DETAIL
SCALE: 1 -1/2"= 1'-0"

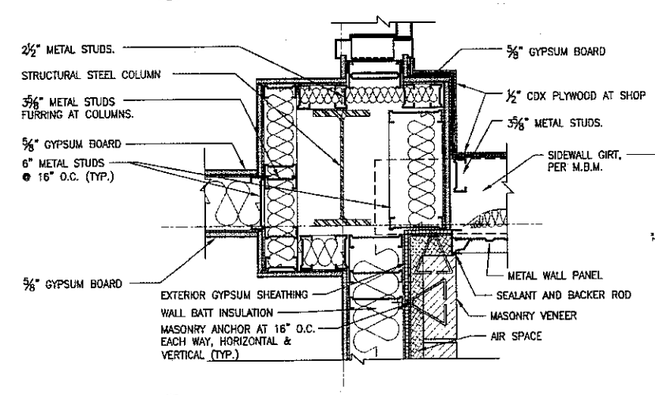

4 PLAN DETAIL
SCALE: 1 -1/2"= 1'-0"

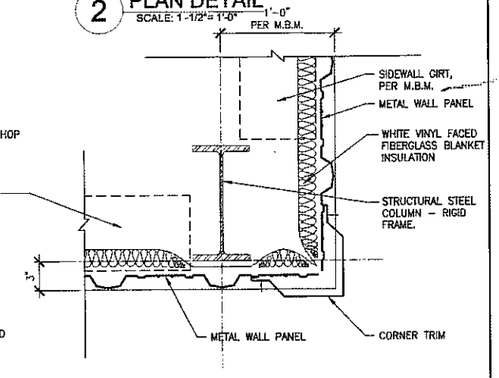

1 PLAN DETAIL
SCALE: 1 -1/2"= 1'-0"

DOOR DETAILS

NOTE: THIS DRAWING WAS CREATED FOR PRODUCTION ON 22" x 34" SHEET SIZE. DO NOT SCALE PRINTS.

CADFILE: T:\WINTFMD14\USH\70400238\acad\Ucsh\0238_A9_3.dwg Plotted: Wed, Mar. 23, 2005 @ 11:12 AM By: JTATE

Texas Department of Transportation
125 E. 11th Street
Austin, Texas 78701-2483
(512) 416-3049
Copyright © 2005 Texas Department of Transportation

REGISTERED ARCHITECT
JOEL BAZAN
14289
STATE OF TEXAS
3/23/05

SOUTH TRAVIS AREA ENGINEER AND MAINTENANCE FACILITY
AUSTIN, TRAVIS COUNTY
AUSTIN DISTRICT 14

Revisions

Drawn by: JOT
Project No. 470400238
Date 03.23.2005
Sheet No.
A9.5
of sheets

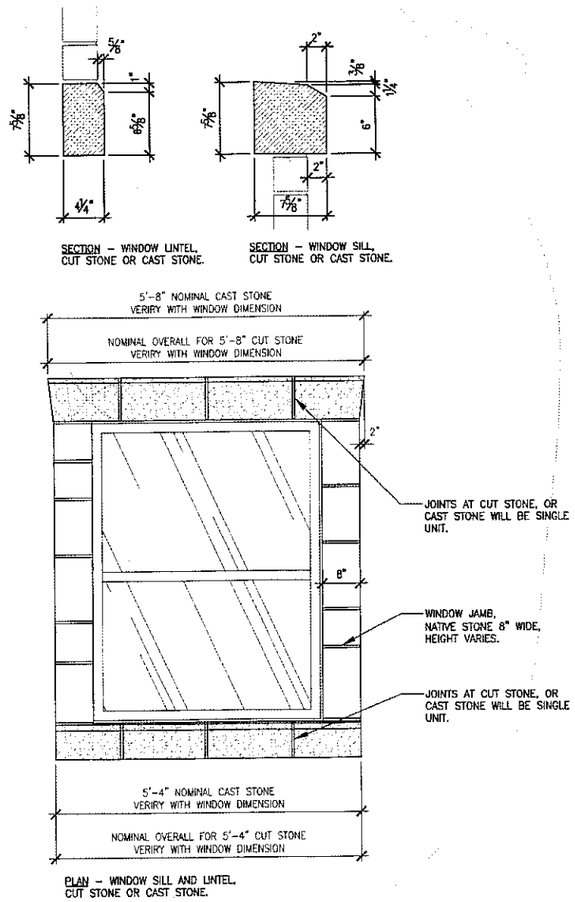

SECTION – WINDOW LINTEL, CUT STONE OR CAST STONE.

SECTION – WINDOW SILL, CUT STONE OR CAST STONE.

PLAN – WINDOW SILL AND LINTEL, CUT STONE OR CAST STONE.

4 WINDOW STONE DETAIL
SCALE: N.T.S.

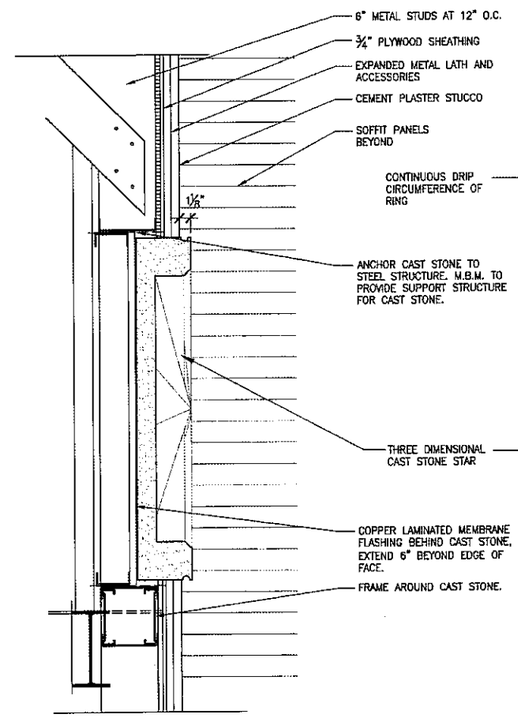

3 CAST STONE STAR DETAIL
SCALE: 1 -1/2"= 1'-0"

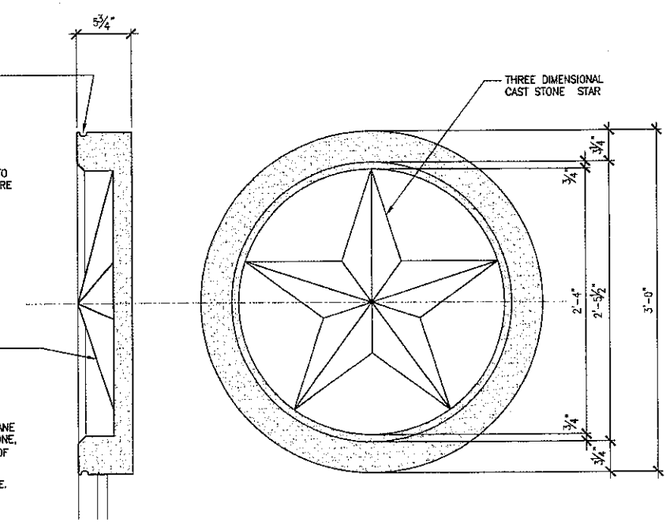

2 CAST STONE STAR ELEVATION / SECTION
SCALE: 1 -1/2"= 1'-0"

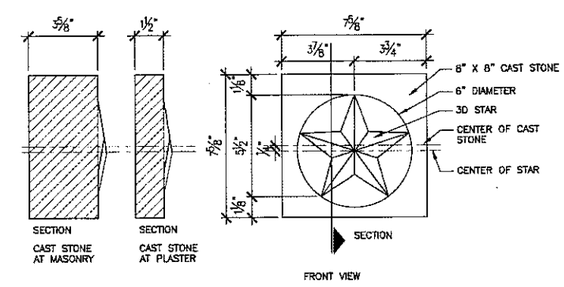

1 CAST STONE STAR DETAIL
SCALE: 3"= 1'-0"

DETAILS

NOTE: THIS DRAWING WAS CREATED FOR PRODUCTION ON 22" x 34" SHEET SIZE. DO NOT SCALE PRINTS.

Texas Department of Transportation
126 E. 11th Street
Austin, Texas 78701-2483
(512) 416-3048
Copyright © 2005 Texas Department of Transportation

REGISTERED ARCHITECT ROEL BAZAN 14269 STATE OF TEXAS
3/23/05

SOUTH TRAVIS AREA ENGINEER AND MAINTENANCE FACILITY
AUSTIN, TRAVIS COUNTY
AUSTIN DISTRICT 14

Revisions

Drawn by: JOT
Project No. 470400238
Date 03.23.2005
Sheet No.
A9.6
of sheets

CADFILE: T:\MNTFM\D14\US\470400238\acad\Arch\0238_A9_3.dwg Plotted: Wed, Mar. 23, 2005 @ 4:09 PM By: JTATE

MOUNTING HEIGHTS

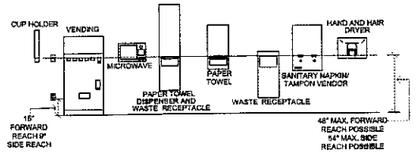

DOOR SIGNAGE MOUNTING HEIGHTS AND LOCATION

CHARACTER PROPORTIONS
LETTERS AND NUMBERS OF SIGNS SHALL HAVE A WIDTH-TO-HEIGHT RATIO OF BETWEEN 3/5 AND 1:1, AND STROKE/WIDTH-TO- HEIGHT RATIO BETWEEN 1:5 AND 1:10

CHARACTER HEIGHT
CHARACTERS AND NUMBERS ON SIGNS SHALL BE SIZED ACCORDING TO THE VIEWING DISTANCE FROM WHICH THEY ARE TO BE READ. THE MINIMUM HEIGHT IS MEASURED USING AN UPPER CASE "X". LOWER CASE CHARACTERS ARE PERMITTED. OVERHEAD SIGNS SHALL HAVE MINIMUM CLEARANCE OF 80" UNDER LOWEST POINT OF THE SIGN. MINIMUM CHARACTER HEIGHT SHALL BE 3".

RAISED AND BRAILLE CHARACTER
LETTERS AND NUMERALS SHALL BE RAISED 1/32" MINIMUM UPPER CASE "SANSERIF" OR "SIMPLE SERIF" TYPE AND SHALL BE ACCOMPANIED WITH GRADE 2 BRAILLE. RAISED CHARACTERS SHALL BE AT LEAST 5/8" HIGH, BUT NO HIGHER THAN 2". PICTOGRAMS SHALL BE ACCOMPANIED BY THE EQUIVALENT VERBAL DESCRIPTION PLACED DIRECTLY BELOW PICTOGRAMS. THE BORDER DIMENSION OF PICTOGRAM SHALL BE 6" MIN. IN HEIGHT.

FINISH AND CONTRAST
THE CHARACTERS AND THE BACKGROUND OF THE SIGNS SHALL BE EGGSHELL, MATTE, OR NON-GLARE FINISH. CHARACTERS AND SYMBOLS SHALL CONTRAST WITH THEIR BACKGROUND (LIGHT CHARACTERS ON DARK BACKGROUND OR VICE-VERSA)

MOUNTING LOCATIONS AND HEIGHT
SIGNS SHALL BE INSTALLED ON THE WALL ADJACENT TO THE LATCH SIDE OF THE DOOR. IF NO SPACE IS LEFT TO THE LATCH SIDE OF THE DOOR, SUCH AS DOUBLE-LEAF DOORS, SIGN SHALL BE PLACED ON THE NEAREST ADJACENT WALL. MOUNTING HEIGHT SHALL BE 60" ABOVE FINISH FLOOR TO THE CENTERLINE OF THE SIGN. MOUNTING LOCATION SHALL BE SUCH THAT A PERSON MAY APPROACH WITHIN 3" OF SIGNAGE WITHOUT ENCOUNTERING PROTRUDING OBJECT OR STANDING WITHIN THE SWING OF A DOOR.

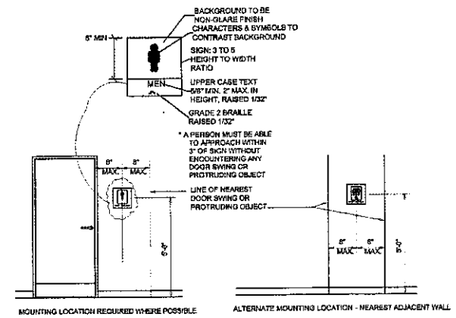

ACCESSIBLE ROUTE

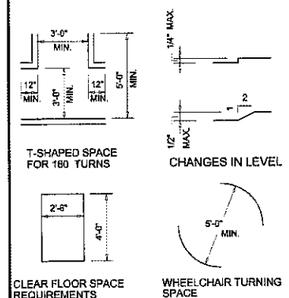

DRINKING FOUNTAINS

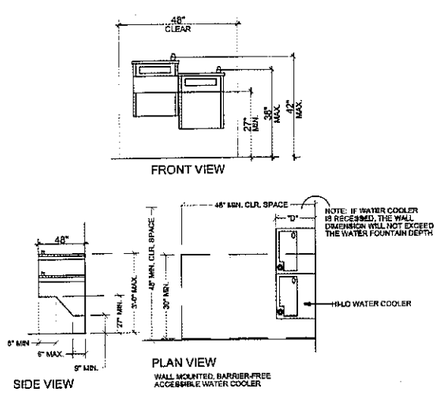

NOTES: 1. SPOUT SHALL BE WITHIN 3" FROM FRONT OF UNIT. FLOW OF WATER SHALL BE MIN. 4" HIGH AND PARALLEL TO FRONT OF UNIT.
2. CONTROLS SHALL BE FRONT-MOUNTED OR SIDE-MOUNTED NEAR THE FRONT. CONTROLS SHALL BE ABLE TO BE OPERATED WITH ONE HAND AND WITH MAX. FORCE OF 5 LBS.

REACHES AND PROTRUDING OBJECTS

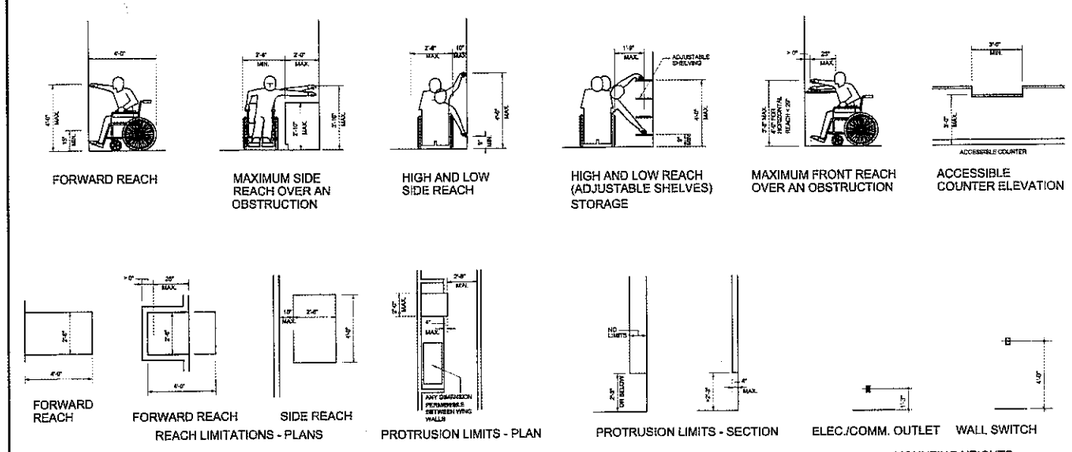

DOORS

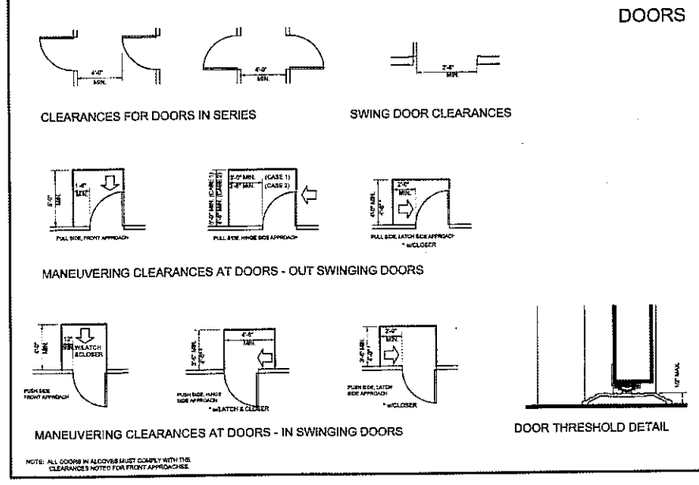

NOTE: ALL DOORS IN ALCOVES MUST COMPLY WITH THE CLEARANCES NOTED FOR FRONT APPROACHES

TOILET ROOMS

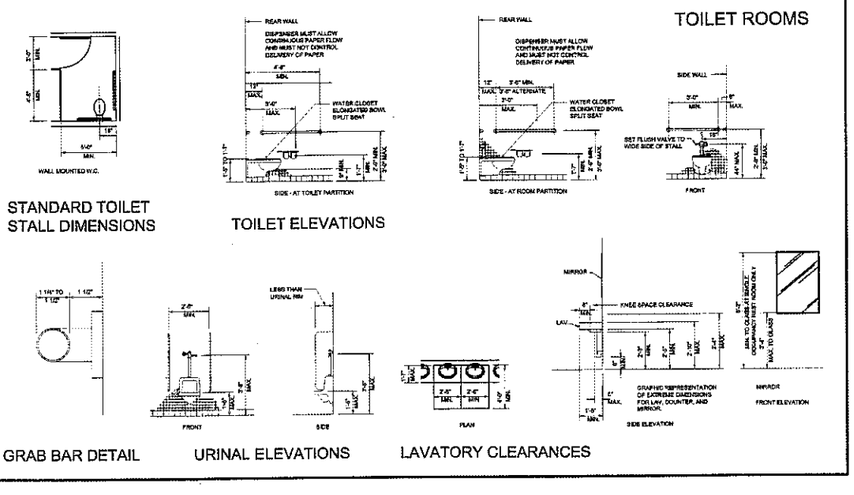

GENERAL NOTES

THIS SHEET IS FOR INFORMATION AND GUIDELINES ONLY
REFER TO ADA AND TAS FOR COMPLETE CRITERIA

1. INFORMATION SHOWN ON THIS SHEET IS THE MINIMUM REQUIRED FOR ADA COMPLIANCE.
2. ALL CONDITIONS SHOWN ON THIS SHEET MAY NOT BE REQUIRED BY THIS PROJECT. COMPARE THE REQUIREMENTS OF THE ARCHITECTURAL DRAWINGS WITH THIS SHEET FOR RELEVANT INFORMATION
3. NOTIFY THE ARCHITECT IMMEDIATELY OF ANY DISCREPANCIES BETWEEN THE ARCHITECTURAL DRAWINGS AND INFORMATION GIVEN ON THIS SHEET FOR CLARIFICATION.

General Notes:
1. Minimum clear width of accessible route: 36".
2. Running slope shall not exceed 1:20. (Cross slope shall not exceed 1:50)
3. 1/4" to 1/2" changes in level require edge to be beveled with a slope no greater than 1:2
4. The highest operable part of controls, dispensers, receptacles and other operable equipment shall be placed no higher than 4' and no lower than 1' 3" above the finish floor. These requirements shall apply to controls and operating mechanisms which are expected to be operable by occupants, visitors, or other users of a building or facility and may include but are not limited to, thermostats, light switches, alarm activated devices, ventilators or electrical outlets.
5. Provide solid blocking at all wall mounted accessories.

Ramps:
1. Maximum slope, 1:12.
2. Transitions shall be flush and free of abrupt changes.
3. Maximum slope of adjacent surfaces: 1:20.
4. Maximum clear width: 36".
5. Handrails required if rise exceeds 6" or run exceeds 72".
6. Handrails shall be provided in both sides of the ramp.
7. Inside rail on switch back or dogleg ramps shall be continuous.
8. Where no continuous, rails shall extend at least 12" beyond top and bottom of ramp parallel to the ground surface
9. Height of handrails: 36" (34-38).
10. Clear floor space between rails and any wall shall be 1-1/2".
11. Gripping surfaces shall be uninterrupted by newel posts, other construction elements, or obstructions.
12. Ends shall be rounded, or returned smoothly to floor, wall or post.
13. Handrails shall not rotate in their fittings.
14. Diameter or width of gripping surfaces shall be 1-1/4" to 1-1/2", or shall provide an equivalent gripping surface.
15. All required curb ramps shall have a groove surface w/grooves running perpendicular to route of travel.
16. All required curb ramps will be painted yellow for contrast.
17. Sides of required curb ramps will have a maximum of 1:10 slope.

Stairs:
1. All steps on all flights of stairs shall have uniform riser heights and tread widths. minimum tread depth shall be 11" unless otherwise noted, measured from riser to riser.
2. Underside of nosing shall not be abrupt. Radius of curvature at leading tread edge shall not exceed 1/2". Risers shall be sloped or underside of nosing shall have an angle not less than 60 degrees. Nosing shall project no more than 1-1/2".
3. Handrails are required at both sides of all stairs.
4. Inside rail on switch back or dogleg stairs shall be continuous.
5. Where no continuous, handrail extensions shall be provided as follows: Top of stairs flights: Parallel to floor, 12" minimum beyond top riser nosing. Bottom of stair flights: continue sloping for one tread width beyond bottom rise, plus 12" minimum parallel to floor.
6. Handrail height: 35" measured from stair nosing.
7. Clear floor space between rail and any wall shall be 1-1/2".
8. Gripping surfaces shall be uninterrupted by newel posts, other construction elements or obstructions.
9. Ends shall be rounded, or returned smoothly to floor, wall or post.
10. Handrails shall not rotate in their fittings.
11. Diameter or width of gripping surface shall be 1-1/4" to 1-1/2", or shall provide an equivalent gripping surface.

Doors:
Ref: Clearance diagrams - this sheet
1. Doorways shall provide a clear opening of 32" min., with the door open 90 degrees.
2. Openings more than 24" in depth shall provide a clear opening of 36" minimum.
3. Max. Threshold height: 1/2".
4. Door hardware: Handles, pulls, latches, locks and other operating devices shall have a shape that is easy to grasp with one hand and does not require tight grasping, tight pinching or twisting of the wrist to operate.
5. Lever-operated mechanisms, push-type mechanisms, and U-shaped handles are acceptable designs.
6. Hardware required fro passage shall be mounted no higher than 47-1/2" above finished floor.
7. Door Closer: If a door has a closer, then the sweep period of the closer shall be adjusted so that from an open position of 70 degrees, the door will take at least 3 seconds to move to a point 3" from the latch, measured to the leading edge of the floor.
8. Door opening Force: The maximum force for pinching or pulling open a door shall be as follows:
   a. Exterior hinged doors: 8 lb.
   b. Interior hinged doors: 5 lb.
   c. Sliding or folding doors: 5 lb.
9. Automatic Doors and Power-assisted Doors: If an automatic door is used, then it shall comply with ANSI/BHMAA156.10-1985. Slowly opening, low powered, automatic doors shall comply with ANSI/A156.19-1984. Such doors shall not open to back check faster than 3 seconds and shall required no more than 15 lb. to stop door movement. If a power-assisted door is used, its door opening force shall comply with forces listed above and its closing force shall comply with ANSI/A156.19-1984.

Water Closets:
1. Water closets shall be located 18" to the center line from a side wall or partition.
2. The height to the top of the toilet seat shall be 17" to 19".
3. For water closets not located in toilet stalls, the following grab bars shall be provided, 34" above the finish floor. Side Wall: 42" long min., 12" from back wall. Back Wall: 36" long min., 12" min. each of water closet center line.
4. Flush controls shall be 44" maximum above the finish floor. Controls for flush valves shall be mounted on the west side of toilet areas.
5. Toilet paper dispensers shall be installed on the side wall, below the grab bar, a minimum 19" above the floor, and a maximum 36" from the rear wall.
6. Toilet stalls will have a minimum depth of 7'-11".
7. Toilet stall doors will have no twist type hardware.

Urinals:
1. Urinals shall be wall hang with an elongated rim 17" maximum above the finish floor.
2. Flush controls shall be 44" maximum above the finished floor.

Lavatories and Mirrors:
1. Lavatories shall extend 17" minimum from the wall.
2. Clearance of 29" minimum shall be provided from finish floor to bottom of apron.
3. Knee clearance of 27" minimum shall extend 8" minimum under the edge of the lavatory.
4. Toe clearance of 9" minimum shall be provided for the full depth of the lavatory.
5. Hot water and drain pipes under lavatories shall be insulated or otherwise configured to protect against contact.
6. Mirrors shall be mounted with the bottom edge of the reflecting surface 40" maximum above the finish floor and the top edge 74" max. above finished floor.
7. If medicine cabinets are provided, at least one shall be located with a usable shelf no higher than 43-1/2" above the floor.

Sinks:
1. Knee clearance of 27" high minimum, 30" wide minimum and 19" deep minimum shall be provided underneath sinks.
2. Hot water and drain pipes under lavatories shall be insulated or otherwise configured to protect against contact.

Grab Bars:
1. Diameter or width of gripping surface shall be 1-1/4" to 1-1/2", or the shape shall provide an equivalent gripping surface.
2. The space between grab bars and adjacent walls shall be 1-1/2".
3. Grab bars shall not rotate within their fittings.
4. Grab bars and adjacent wall surfaces shall be free of sharp or abrasive surfaces.
5. Edges shall have a radius of 1/8" minimum.

Alarms:
1. Visual alarm signal appliances shall be placed 80 inches above the highest floor level within the space or 6" below the ceiling, whichever is lower.
2. Alarm system will meet ADA requirements including flashing lights at 100' max. spacing in corridors and eventually leased areas during tenant finish.

Signage:
1. Signs which designate permanent rooms and spaces shall comply with the requirements listed above for: Mounting Location and Height. Where permanent identification is provided for rooms and spaces, signs shall be installed on the wall adjacent to the latch side of the door. Where there is no wall space to the latch side of the door, including at double-leaf doors, signs shall be placed on the nearest adjacent wall. Mounting height shall be 60" above the finish floor to the centerline of the sign
2. Exterior traffic crossing from ADA spaces to Building entrances shall receive yellow surface markings 8'-0" wide (min.) and ADA crossing warning signs for auto traffic.

TEXAS ACCESSIBILITY STANDARDS

NOTE: THIS DRAWING WAS CREATED FOR PRODUCTION ON 22" x 34" SHEET SIZE. DO NOT SCALE PRINTS.

Texas Department of Transportation
125 E. 11th Street
Austin, Texas 78701-2483
(512) 416-3948

Copyright © 2005 Texas Department of Transportation

REGISTERED ARCHITECT ROEL BAZAN 14259 STATE OF TEXAS
3/23/05

SOUTH TRAVIS AREA ENGINEER AND MAINTENANCE FACILITY
AUSTIN, TRAVIS COUNTY
AUSTIN DISTRICT 14

Revisions

Drawn by: J.O.T.
Project No. 470400238
Date 03.23.2005
Sheet No.
A11.1
of sheets

CADFILE: T:\MNTFN\D14\AUS\470400238\Acad\Arch\0238_A11_1.dwg Plotted: Tue, Mar. 22, 2005 @ 10:05 PM By: JTATE

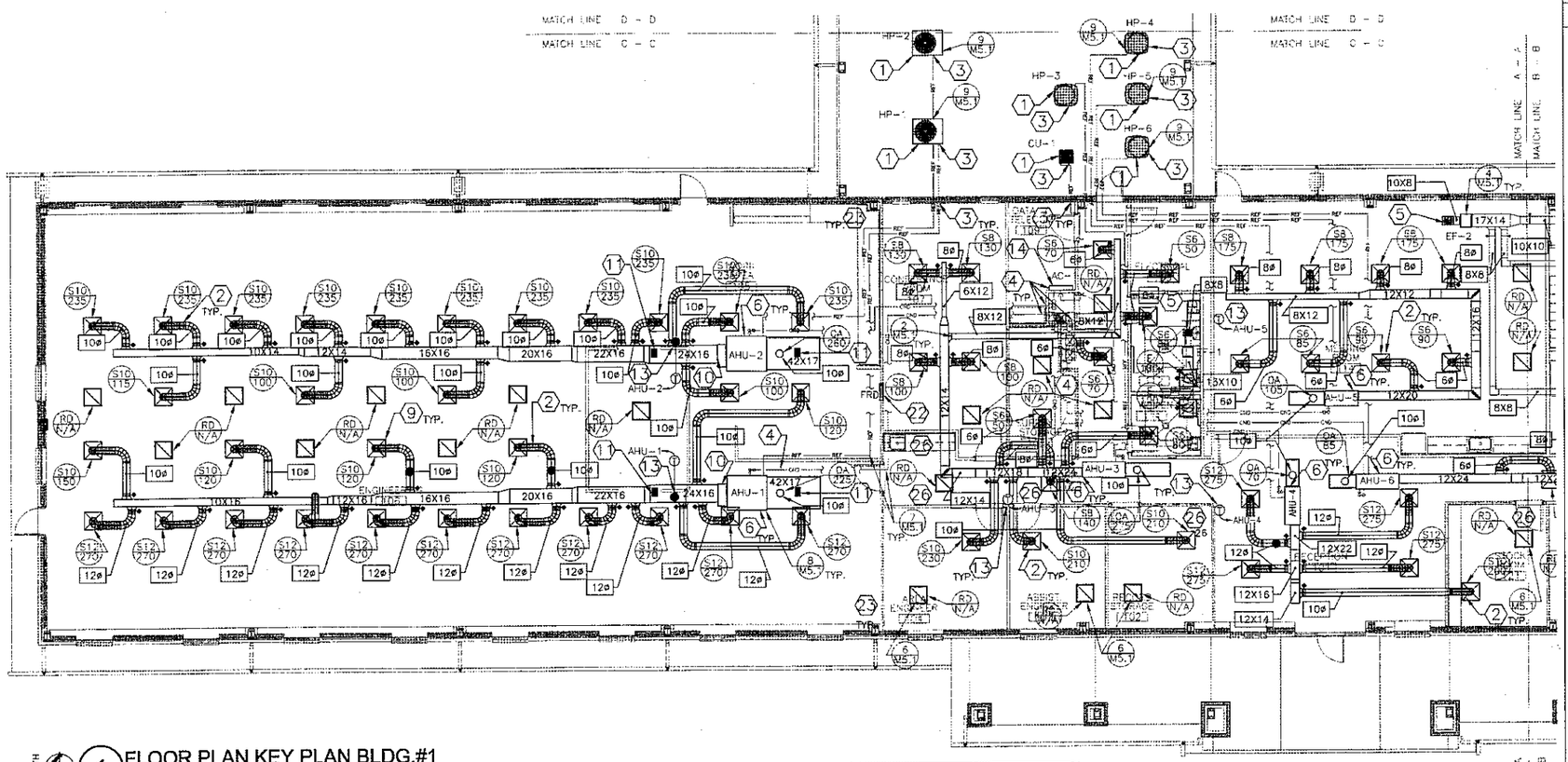

NORTH

1 FLOOR PLAN KEY PLAN BLDG.#1

SCALE: 1/8" = 1'-0"

0' 2' 4' 8' 16'

KEYED NOTES -

1. INSTALL VIBRATION ISOLATION PADS. MAINTAIN CLEARANCES BETWEEN EACH UNIT AND EDGE OF PAD AS DESCRIBED IN THE GENERAL NOTES. ANCHOR OUTDOOR UNIT TO ROOF CURB WITH FOUR LOOSE CABLES WITH ONE END BOLTED TO THE OUTDOOR UNIT AND THE OHTER END BOLTED TO THE CURB. CABLES SHALL BE LOOSE ENOUGH TO NOT TRANSMIT VIBRATION, BUT SHORT ENOUGH TO PREVENT THE UNIT FROM MOVING.

2. CONTRACTOR MAY USE FLEXIBLE METAL DUCT AS DESCRIBED IN THE GENERAL NOTES.

3. ROUTE FREON LINES AND CONTROL WIRING ABOVE CEILING TO EXTERIOR WALL. PENETRATE EXTERIOR WALL WITH FREON LINES AND CONTROL WIRING TO BREEZE WAY CAVITY LOCATED ABOVE SOFFIT ACCESS PANELS. ROUTE FREON LINES THROUGH CAVITY ABOVE ACCESS PANELS TO ROOF CURBS. DAYLIGHT FREON LINES AND CONTROL WIRING THROUGH THE SIDE OF THE ROOF CURB, JUST BELOW PROVIDED FLASHING. INSULATE AND SEAL EXTERIOR WALL PENETRATION. SEAL REFRIGERANT LINE PENETRATION THROUGH SIDE OF ROOF CURB.

4. ROUTE 3/4" HARDDRAWN TYPE "K" COPPER PIPING CONDENSATE DRAIN FROM EACH INDOOR UNIT TO FLOOR DRAIN. TERMINATE EACH CONDENSATE DRAIN OVER FLOOR DRAIN, MAINTAIN SLOPE 1/8" TO 1/4" PER FOOT WITH AN ELBOW INSTALLED IN THE DOWN POSITION. PROVIDE 1" AIR GAP ABOVE FLOOR DRAIN

5. DISCHARGE EXHAUST AIR TO ROOF JACK. SUSPEND EXHAUST FAN WITH UNISTRUT AND SPRING VIBRATION ISOLATORS.

6. PROVIDE AND INSTALL PLEATED FILTERS AND SUPPLY AND RETURN FLEXIBLE CONNECTORS FOR EACH INDOOR UNIT PER MANUFACTURER RECOMMENDATIONS.

7. INSTALL AND PROVIDE A DUCT MOUNTED SMOKE DETECTOR IN THE RETURN AND THE SUPPPLY AIR DUCT. SMOKE DETECTOR SHALL SHUT DOWN AHU-7. THE SMOKE DETECTOR IN THE SUPPLY SHALL BE LOCATED JUST BEFORE THE FIRST BRANCH AIR DUCT.

8. NOT USED.

9. ALL GRILLES AND DIFFUSERS IN ALL SPACES SHALL BE COORDINATED WITH BUILDING STRUCTURE AND SUPPORTED AT ALL FOUR CORNERS. (SEE ARCHITECTURAL AND STRUCTURAL DRAWINGS).

10. ACCESSORY CABINET WITH ELECTRIC HEAT.

11. INSTALL AND PROVIDE A DUCT MOUNTED SMOKE DETECTOR IN THE RETURN AND SUPPLY MAIN AIR DUCT. EACH SMOKE DETECTOR SHALL SHUT DOWN BOTH AHU-1 AND AHU-2. THE SMOKE DETECTORS IN THE SUPPLY SHALL BE LOCATED JUST BEFORE THE FIRST BRANCH AIR DUCT.

CONTINUED-KEYED NOTES -

12. INSTALL AND PROVIDE A 4"ø LISTED TYPE "B" VENT EXTEND 24" ABOVE ROOF.

13. INSTALL THERMOSTAT ON WALL 48" A.F.F.

14. MOUNT INDOOR UNIT CENTERED ON WALL 7FT ABOVE FINISHED FLOOR TO THE BOTTOM OF UNIT, COORDINATE WITH TRADES TO ENSURE UNIT DOES NOT OBSTRUCT TELECOMMUNICATION EQUIPMENT.

15. TRANSITION DUCT TO FIT CURB AND DAMPER. DUCT INTAKE AIR PARALLEL WITH ROOF DECK DROP DOWN AT WALL TO FLOOR 16"X16", 18 GAUGE SHEETMETAL LEAVE BOTTOM OF DUCT OPEN 24" A.F.F. PROVIDE AND INSTALL BIRDSCREEN.

16. DUCT EXHAUST AIR PARALLEL WITH ROOF DECK DROP DOWN AT WALL TO FLOOR 16"X16", 18 GAUGE SHEETMETAL LEAVE BOTTOM OF DUCT OPEN 24" A.F.F. PROVIDE AND INSTALL BIRDSCREEN.

17. INSTALL BOTTOM OF LOUVER 10FT A.F.F. COORDINATE WITH BUILDING STRUCTURE. (SEE ARCHITECTURAL AND STRUCTURAL DRAWINGS). INSTALL ASSEMBLY TO MANUFACTURER RECOMMENDATIONS. SECURE THE MOUNT PLATFORM TO BUILDING BEAM. DUCT FAN DISCHARGE TO LOUVER.

18. NOT USED.

19. INSTALL EXHAUST FAN ON ROOF CURB.

20. COORDINATE WITH ELECTRICAL. MECHANICAL SHALL SUPPLY ALL THERMOSTATS. ELECTRICAL SHALL PROVIDE WIRE AND CONDUIT AND INSTALL THE 120V THERMOSTATS WHICH SHALL CONTROL THE INFRARED HEATERS.

21. ROTATE INFRARED HEATER 20° TOWARD CENTER OF ROOM. INSTALL BOTTOM OF HEATER 14FT A.F.F.

22. TRANSFER AIR OPENING IN FIRE RATED WALL. PROVIDE AND INSTALL FIRE RATED DAMPER IN ACCORDANCE WITH MANUFACTURER INSTALLATION INSTRUCTIONS WITH SLEEVE.

23. FIRE CAULK ALL PENETRATIONS IN FIRE WALL. (SEE GENERAL NOTES).

24. INSTALL BOTTOM OF LOUVER 18" A.F.F. COORDINATE WITH BUILDING STRUCTURE. (SEE ARCHITECTURAL AND STRUCTURAL DRAWINGS).

25. NOT USED.

26. PROVIDE A 12"X12" FRAMED OPENING IN SHEET ROCK WALL ABOVE CEILING TO CORRIDOR FOR RECIRCULATION.

MECHANICAL LEGEND

	SUPPLY DIFFUSER		DUCT SIZE CHANGE
	RETURN GRILLE, OR EXHAUST		RECTANGULAR ELBOW WITH TURNING VANES
	VOLUME BALANCING DAMPER	XX CFM	GRILLE TYPE AIR FLOW
	VENTILATION LOUVER		RECTANGULAR "BOOT" TAP
T	THERMOSTAT		ROUND "CONICAL" FITTING WITH VOLUME DAMPER
S	REMOTE SENSOR		
H	HUMIDISTAT		STATIONARY SPLITTER WITH TURNING VANES AND DAMPER
# / X##	DETAIL NUMBER / SHEET DESIGNATOR		VAINED, RADIUS ELBOW

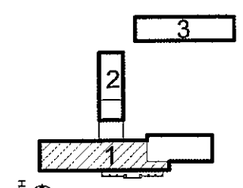

NORTH

KEY PLAN

APPLIES TO ALL M-SHEETS
GENERAL NOTES

1. NOTE THAT CONSTRUCTION DRAWINGS ARE DIAGRAMMATIC BY THEIR NATURE, AND ARE NOT INTENDED TO SHOW EVERY CONNECTION IN DETAIL OR EVERY PIPE, DUCT OR CONDUIT IN ITS EXACT LOCATION. FEATURES AND COMPONENTS NOT SHOWN ARE SUBJECT TO THE REQUIREMENTS OF STANDARDS REFERENCED ELSEWHERE IN THE CONSTRUCTION DOCUMENTS. THE CONTRACTOR SHALL COORDINATE THE VARIOUS TRADES IN ORDER TO AVOID INTERFERENCE BETWEEN THE VARIOUS SEGMENTS OF THE PROJECT.

2. ALL WORK SHALL BE INSTALLED PARALLEL OR PERPENDICULAR TO THE BUILDING LINES.

3. REFER TO SPECIFICATIONS FOR ADDITIONAL INFORMATION. THE SPECIFICATIONS REPRESENT AN ESSENTIAL PART OF THE CONSTRUCTION DOCUMENTS.

4. DIFFUSERS SHALL BE CENTERED IN THE ROOM OR AREA INDICATED. DIFFUSERS SHALL ALSO BE SPACED EVENLY AS SHOWN IN THE PLAN. COORDINATE WITH THE REFLECTED CEILING PLAN FOR EXACT LOCATIONS.

5. ALL DUCTWORK DIMENSIONS INDICATED IN PLANS ARE CLEAR UNOBSTRUCTED FREE AREA DIMENSIONS.

6. DUCTWORK SHALL BE FABRICATED FROM SHEETMETAL; INSTALLED AND TESTED AS RECOMMENDED BY SMACNA AS A MINIMUM STANDARD. NOTE THAT THE SPECIFICATIONS MAY STIPULATE STRICTER CONSTRUCTION REQUIREMENTS WHICH SHALL BE COMPLIED TO.

7. INSULATE ALL DUCTWORK INCLUDING SUPPLY AIR, RETURN AIR, OUTSIDE AIR, WITH EXTERNAL 2" BLANKET TYPE INSULATION. INSULATION SHALL HAVE A FOIL, REINFORCED KRAFT PAPER (FRK) VAPOR BARRIER FACING, AS SPECIFIED.

8. DUCT WORK TRANSITIONS SHALL HAVE MAXIMUM 15° CONVERGENCE, UNLESS NOTED OTHERWISE.

9. CHANGES IN DIRECTION IN ROUND DUCT WORK SHALL BE MADE USING 4-SECTION ADJUSTABLE "90's" OR 3-SECTION ADJUSTABLE "45's".

10. ALL 90° TURNS IN RECTANGULAR DUCT SHALL BE INSTALLED WITH TURNING VANES.

11. SUPPORT ALL DUCTWORK WITH UNISTRUT AND HANGERS AS SPECIFIED, AND PER MANUFACTURERS RECOMMENDATIONS.

12. ALL DROPS TO SUPPLY DIFFUSERS, RETURN DUCTS, EXHAUST GRILLES, AND ALL OUTSIDE AIR SUPPLIES, SHALL HAVE VOLUME BALANCING DAMPERS INSTALLED AT MAIN DUCT TAP.

13. ALL TAP CONNECTIONS IN RECTANGULAR DUCT FOR ROUND SHEETMETAL OR FLEXIBLE DUCT SHALL BE INSTALLED USING CONICAL BELLMOUTH WITH 1" FLANGE AND GASKET SPIN-IN CONNECTOR WITH DAMPER INCLUDING 2" BUILD OUT, NYLON BUSHINGS, LOCKING QUADRANT AND HANDLE.

14. DUCT SEALANT SHALL BE LATEX BASED, WATER SOLUBLE. SOLVENT BASED DUCT SEALANT IS PROHIBITED.

15. ALL AREAS: FLEXIBLE METAL DUCT IS PERMITTED AT THE DIFFUSERS, MAXIMUM LENGTH IS 4FT. ALL FLEXIBLE METAL DUCT SHALL HAVE A FLAME RETARDANT VAPOR BARRIER.

16. CONNECTIONS OF "AHU" UNITS TO DUCTWORK SHALL BE MADE WITH FLEXIBLE VIBRATION DAMPENING CONNECTIONS AS SPECIFIED.

17. USE SPRING ISOLATORS ON ALL SUSPENDED MECHANICAL EQUIPMENT. VIBRATION ISOLATION SHALL BE AS SPECIFIED.

18. ALL REFRIGERANT LINES SHALL BE INSULATED WITH 1/2" ARMAFLEX (OR APPROVED EQUAL) CLOSED CELL FOAM PIPE INSULATION. INSULATION INSTALLED WHERE EXPOSED TO SUNLIGHT SHALL BE PAINTED WITH TWO COATS OF WHITE EXTERIOR GRADE LATEX PAINT. INDIVIDUALLY INSULATE THE LIQUID AND VAPOR REFRIGERANT LINES. NEATLY BUNDLE THE REFRIGERANT LINES TOGETHER (FOR THE ENTIRE LENGTH), WITHOUT COMPRESSING INSULATION.

19. CONDENSATE LINES SHALL BE MINIMUM 3/4" TYPE "K" COPPER, INSTALLED AS SPECIFIED FOR WATER PIPING, INSULATED WITH SAME MATERIAL AS DESCRIBED FOR FREON LINES.

20. OUTSIDE AIR INTAKE LOUVERS SHALL BE INSTALLED AS INDICATED. MAINTAIN A DISTANCE OF AT LEAST 10 FT AWAY FROM ANY EXHAUST FAN, FLUE, COMBUSTION AIR VENT, AND/OR SANITARY SEWER VENT.

21. ROOF CONTRACTOR SHALL INSTALL ALL ROOF PENETRATIONS IN THE APPROXIMATE LOCATIONS SHOWN IN PLANS AS PER ARCHITECTURAL DRAWINGS AND SPECIFICATIONS.

22. INSTALL 4" SQUARE RESILIENT NEOPRENE AND CORK VIBRATION ISOLATION PADS ON ALL FOUR CORNERS. CONDENSING UNITS SHALL BE INSTALLED ON AN EQUIPMENT PAD (SEE THE ARCHITECT PLANS). MAINTAIN 36" CLEARANCE BETWEEN EACH UNIT, MINIMUM 48" FROM THE BUILDING STRUCTURE, AND MINIMUM 6" TO EDGE OF PAD, ALL SIDES. CONDENSING UNITS LARGER THAN FIVE TONS SHALL HAVE AN ADDITIONAL ISOLATION PAD ON EACH SIDE LOCATED IN THE CENTER OF THE UNIT AND 72" CLEARANCE FROM ALL OTHER UNITS.

23. SLEEVE ALL WALL PENETRATIONS WITH SLEEVE 2 PIPE SIZES LARGER THAN PENETRATING PIPE. SLEEVE AND PENETRATING PIPE SHALL BE CONSTRUCTED FROM THE SAME MATERIAL. MAINTAIN INSULATION THROUGH SLEEVES.

24. ALL EXTERIOR, SLAB AND CONDITIONED TO NON-CONDITIONED PENETRATIONS, PACK ANNULUR SPACE WITH MINERAL WOOL. SEAL EACH EXTERIOR END AND TOP END OF SLAB PENTRATION WITH SEALANT (SEE ARCHITECTURAL SPECIFICATIONS).

25. FIRE CAULK ALL PIPE PENETRATIONS WHERE ARHITECTURAL PLANS CALL FOR FIRE RATED CONTRUCTION WALLS. STOP INSULATION SHORT OF SLEEVE FILL ANNULAR SPACES WITH FIRE RATED CAULK.

26. FIRE CAULK ALL DUCT PENETRATIONS WHERE ARCHITECTURAL PLANS CALL FOR FIRE RATED CONSTRUCTION WALLS.

27. EQUIPMENT ACCESS PANELS SHALL REMAIN ACCESSIBLE.

MECHANICAL PLAN-BLDG.#1

NOTE: THIS DRAWING WAS CREATED FOR PRODUCTION ON 22" x 34" SHEET SIZE. DO NOT SCALE PRINTS.

Texas Department of Transportation
125 E. 11th Street
Austin, Texas 78701-2483
(512) 416-3048
Copyright © 2005 Texas Department of Transportation

STATE OF TEXAS
CARL OWEN NIX
93674
LICENSED PROFESSIONAL ENGINEER
3-23-05

SOUTH TRAVIS AREA ENGINEER AND MAINTENANCE FACILITY
AUSTIN, TRAVIS COUNTY
AUSTIN DISTRICT 14

Revisions
1
2
3
4

Drawn by:
CARL O. NIX, P.E.
Project No.
470400238
Date
03.23.2005
Sheet No.
M2.1
of X sheets

CADFILE: T:\MNTFN\D16\US470400238\cad\MEPM2_1_TO_M2_4.dwg Plotted: Wed, Mar. 23, 2005 @ 11:17 AM By: CNIX

SEE M2.1 FOR GENERAL AND KEYED NOTES

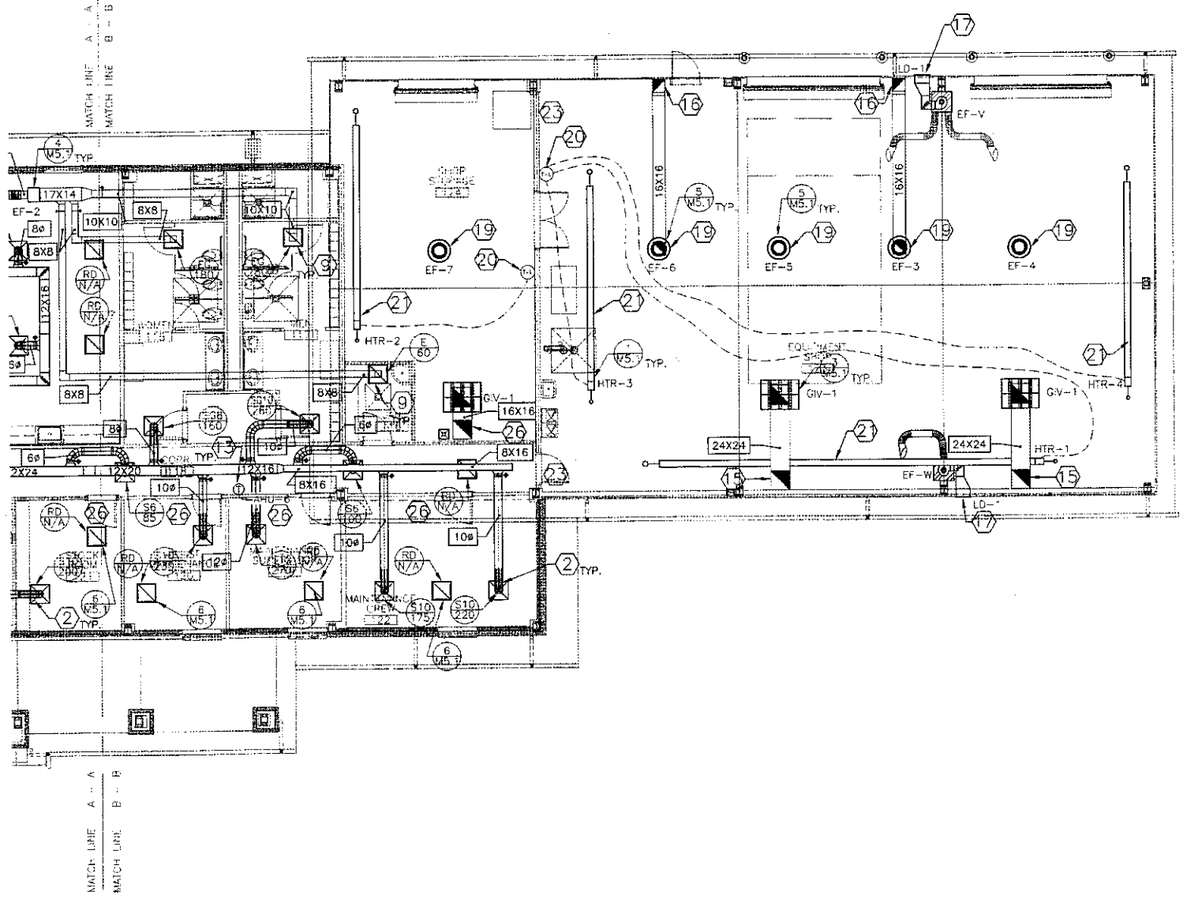

NORTH

1 FLOOR PLAN KEY PLAN BLDG. #1

SCALE: 1/8" = 1'-0"

0' 2' 4' 8' 16'

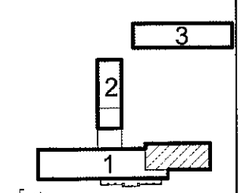

NORTH

KEY PLAN

MECHANICAL PLAN-BLDG.#1

NOTE: THIS DRAWING WAS CREATED FOR PRODUCTION ON 22" x 34" SHEET SIZE. DO NOT SCALE PRINTS.

CADFILE: T:\MNTFMD14\US470400238\Acad\MEP\M2_1_TO_M2_4.dwg Plotted: Wed, Mar. 23, 2005 @ 11:17 AM By: CNIX

Texas Department of Transportation
125 E. 11th Street
Austin, Texas 78701-2483
(512) 416-2048

Copyright © 2005 Texas Department of Transportation

STATE OF TEXAS
CARL OWEN NIX
93674
LICENSED PROFESSIONAL ENGINEER
4/13/05

SOUTH TRAVIS AREA ENGINEER AND MAINTENANCE FACILITY

AUSTIN, TRAVIS COUNTY
AUSTIN DISTRICT 14

Revisions

Drawn by:
CARL O. NIX, P.E.

Project No.
470400238

Date
03.23.2005

Sheet No.

M2.2

of X sheets

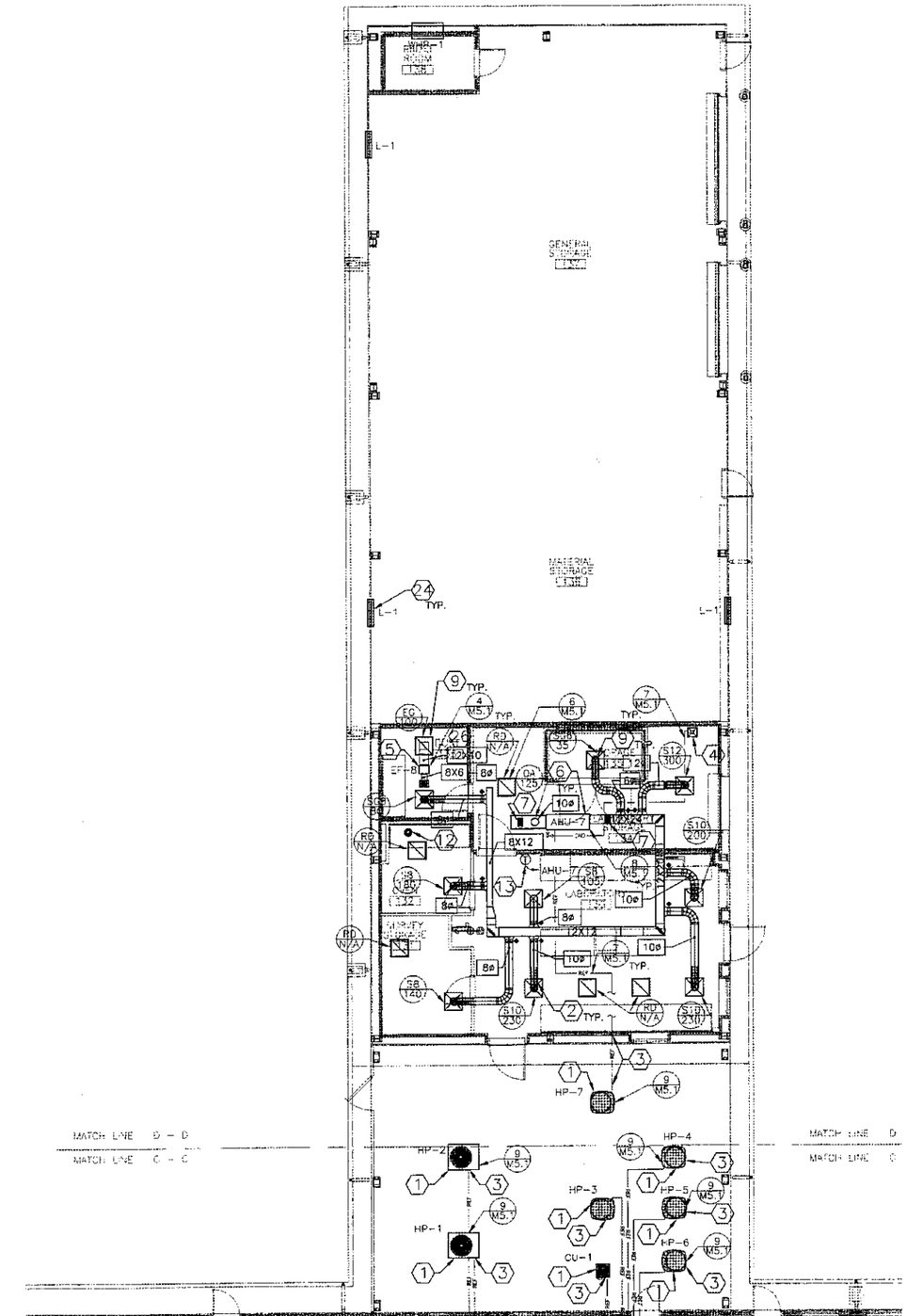

1 FLOOR PLAN KEY PLAN BLDG.#2
SCALE: 1/8" = 1'-0"

APPLIES TO WALL THRU UNIT IN RADIO ROOM
GENERAL NOTES

1. NOTE THAT CONSTRUCTION DRAWINGS ARE DIAGRAMMATIC BY THEIR NATURE, AND ARE NOT INTENDED TO SHOW EVERY CONNECTION IN DETAIL OR EVERY PIPE, DUCT OR CONDUIT IN ITS EXACT LOCATION. FEATURES AND COMPONENTS NOT SHOWN ARE SUBJECT TO THE REQUIREMENTS OF STANDARDS REFERENCED ELSEWHERE IN THE CONSTRUCTION DOCUMENTS. THE CONTRACTOR SHALL COORDINATE THE VARIOUS TRADES IN ORDER TO AVOID INTERFERENCE BETWEEN THE VARIOUS SEGMENTS OF THE PROJECT.

2. ALL WORK SHALL BE INSTALLED PARALLEL OR PERPENDICULAR TO THE BUILDING LINES UNLESS NOTED OTHERWISE.

3. REFER TO SPECIFICATIONS FOR ADDITIONAL INFORMATION.

4. CONTRACTOR SHALL INSTALL THE EXTENDED WALL SLEEVE AND CONDENSATE DRIP PANEL FOR THE WALL THRU UNIT IN THE LOCATION SHOWN IN THE ARCHITECTURAL PLANS. INSTALL A WEATHER PROOF INSTALLATION. ALL WALL PENETRATIONS SHALL BE INSTALLED IN ACCORDANCE TO THE ARCHITECTURAL PLANS.

5. SUPPORT THRU WALL UNIT IN ACCORDANCE TO THE MANUFACTURER'S RECOMMENDATIONS.

4. COORDINATE WITH ELECTRICAL. MECHANICAL SHALL SUPPLY NEMA PLUG FACE CONFIGURATION INFORMATION REQUIRMENTS FOR THRU WALL UNIT. ELECTRICAL SHALL PROVIDE AND INSTALL A MATCHING RECEPTACLE FOR THE UNIT.

SEE M2.1 FOR GENERAL AND KEYED NOTES

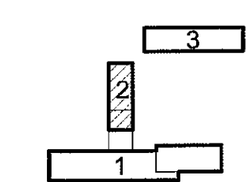

KEY PLAN

MECHANICAL PLAN-BLDG.#2

NOTE: THIS DRAWING WAS CREATED FOR PRODUCTION ON 22" x 34" SHEET SIZE. DO NOT SCALE PRINTS.

Texas Department of Transportation
125 E. 11th Street
Austin, Texas 78701-2483
(512) 416-3948
Copyright © 2005 Texas Department of Transportation

STATE OF TEXAS
CARL OWEN NIX
93674
LICENSED PROFESSIONAL ENGINEER
03/23/05

SOUTH TRAVIS AREA ENGINEER AND MAINTENANCE FACILITY
AUSTIN, TRAVIS COUNTY
AUSTIN DISTRICT 14

Revisions

Drawn by:
CARL O. NIX, P.E.
Project No.
470400238
Date
03.23.2005
Sheet No.
M2.3
of X sheets

CADFILE: T:\ANTF\MD14\US\470400238\Acad\MEP\M2_1_TO_M2_4.dwg Plotted: Wed, Mar 23, 2005 @ 11:17 AM By: CNIX

SEE M2.1 FOR GENERAL AND KEYED NOTES

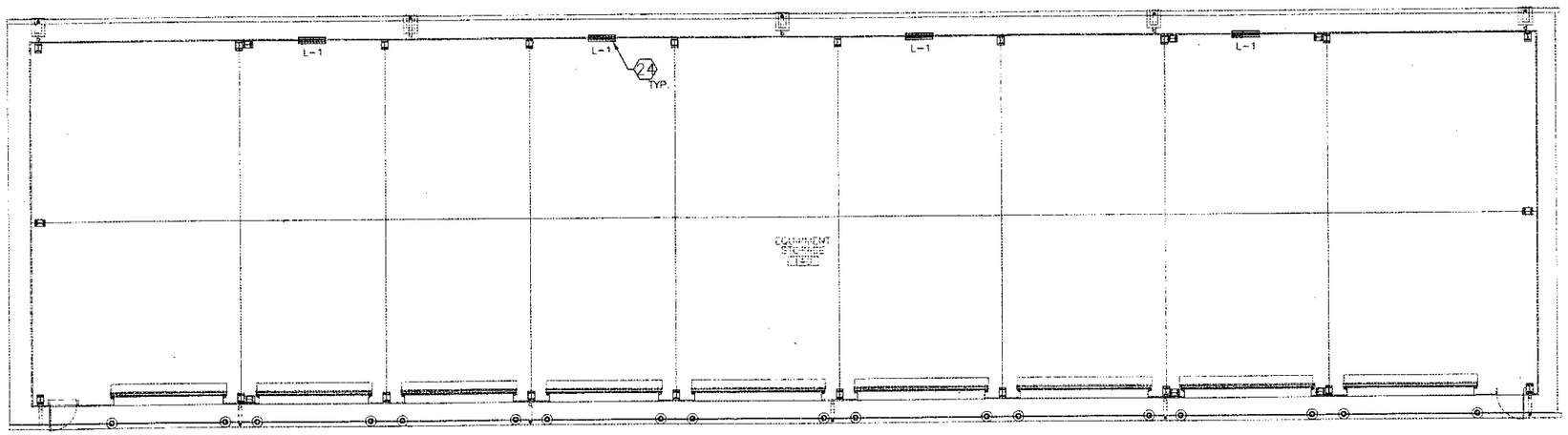

NORTH

1 FLOOR PLAN KEY PLAN BLDG. #3
SCALE: 1/8" = 1'-0"

0' 2' 4' 8' 16'

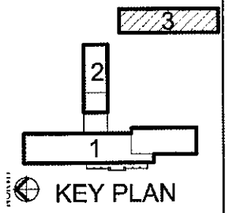

KEY PLAN

MECHANICAL PLAN-BLDG.#3

NOTE: THIS DRAWING WAS CREATED FOR PRODUCTION ON 22" x 34" SHEET SIZE. DO NOT SCALE PRINTS.

CADFILE: T:\INTFM\D14AUS\470400238\Acad\MEP\M2_1_TO_M2_4.dwg Plotted: Wed, Mar. 23, 2005 @ 11:16 AM By: CNIX

Texas Department of Transportation
125 E. 11th Street
Austin, Texas 78701-2483
(512) 416-3048

Copyright © 2005 Texas Department of Transportation

STATE OF TEXAS
CARL OWEN NIX
93674
LICENSED PROFESSIONAL ENGINEER
3/23/05

SOUTH TRAVIS AREA ENGINEER AND MAINTENANCE FACILITY

AUSTIN, TRAVIS COUNTY
AUSTIN DISTRICT 14

Revisions

Drawn by:
CARL O. NIX, P.E.
Project No.
470400238
Date
03.23.2005
Sheet No.

M2.4
of X sheets

HEAT PUMP SCHEDULE

INDOOR UNIT:	AHU-1	AHU-2	AHU-3	AHU-4	AHU-5	AHU-6	AHU-7
*ELECTRIC RESISTANCE HEATER MODEL No.	BAYHTRL315A	BAYHTRL315A	BAYHTR3415	BAYHTR3415	BAYHTR3410	BAYHTR3415	BAYHTR3415
*AUX. HEAT INPUT, KW / CONTROL STAGES	14.96 / 1	14.96 / 1	11.53 / 1	11.53 / 1	7.2 / 1	11.53 / 1	11.53 / 1
*AUX. HEATING CAPACITY, BTUH	51,058	51,058	39,300	39,300	24,600	39,300	39,300
*UNIT VOLTS / PHASE / HZ	208 / 3 / 60	208 / 3 / 60	208 / 3 / 60	208 / 3 / 60	208 / 3 / 60	208 / 3 / 60	208 / 3 / 60
*CIRCUIT#1 MCA / MOCP	52 / 60	52 / 60	45 / 45	45 / 45	37 / 40	45 / 45	45 / 45
CIRCUIT#2 MCA / MOCP	N/A	N/A	N/A	N/A	N/A	N/A	N/A
FAN DRIVE TYPE / No. SPEEDS	BELT / ADJUSTABLE	BELT / ADJUSTABLE	DIRECT / 3	DIRECT / 3	DIRECT / 3	DIRECT / 3	DIRECT / 3
DESIGN SUPPLY CFM (HORIZONTAL)	3,600 @ 0.7" ESP.	3,000 @ 0.7" ESP.	1,600 @ 0.6" W.G.	1,300 @ 0.58" W.G.	1,050 @ 0.58" W.G.	1,500 @ 0.71" W.G.	1,500 @ 0.71" W.G.
DESIGN SUPPLY CFM (VERTICAL)	N/A	N/A	N/A	N/A	N/A	N/A	N/A
DESIGN OUTSIDE AIR CFM (OA)	225	260	275	70	105	85	125
BLOWER FAN (HP)	1.5	1.5	1.0	1/2	1/3	1.0	1.0
NUMBER AND SIZE OF FILTERS (LOW VEL.)	(3) 16 x 25 x 1	(3) 16 x 25 x 1	(1) 20 X 25 X 1	(1) 20 X 20 X 1	(1) 20 X 20 X 1	(1) 20 X 25 X 1	(1) 20 X 25 X 1
MANUFACTURER	TRANE	TRANE	TRANE	TRANE	TRANE	TRANE	TRANE
AIR HANDLER MODEL	TWE090A300CA	TWE090A300CA	TWE048P13FB	TWE042P13FB	TWE036P13FB	TWE048P13FB	TWE048P13FB
No. REFRIGERANT CIRCUITS/ INDOOR UNIT	1	1	1	1	1	1	1
MOUNTING SUBBASE	N/A	N/A	N/A	N/A	N/A	N/A	N/A
OUTDOOR UNIT: (NOTE CAPACITIES LISTED/UNIT)	HP- 1	HP- 2	HP-3	HP-4	HP-5	HP-6	HP-7
No. OUTDOOR UNITS / INDOOR UNIT	1	1	1	1	1	1	1
**RATED PERFORMANCE BASED ON	3,000 CFM	3,000 CFM	1600 CFM	1,400 CFM	1200 CFM	1600 CFM	1600 CFM
**COOLING CAPACITY (TOTAL BTUH)	91,100	91,100	49,500	41,000	34,800	49,500	49,500
**COOLING CAPACITY (SENSIBLE BTUH)	65,900	65,900	36,700	30,500	25,400	36,700	36,700
**EER/SEER MATCHED AIR HANDLER	10.1 / N/A	10.1 / N/A	10.60 / 12.25	10.55 / 12.25	10.85 / 12.75	10.60 / 12.25	10.60 / 12.25
**HIGH TEMP. HTG. CAP. (BTUH)	87,000	87,000	46,500	39,500	35,400	46,500	46,500
**LOW TEMP. HTG. CAP. (BTUH)	55,000	55,000	N/A	N/A	N/A	N/A	N/A
**HIGH TEMPERATURE SYSTEM (COP)	3.3	3.3	3.46	3.36	3.42	3.46	3.46
**LOW TEMPERATURE SYSTEM (COP)	2.4	2.4	N/A	N/A	N/A	N/A	N/A
No. COMPRESSORS / OUTDOOR UNIT	1	1	1	1	1	1	1
COMPRESSOR TYPE	SCROLL	SCROLL	SCROLL	SCROLL	SCROLL	SCROLL	SCROLL
No. OUTDOOR FANS / OUTDOOR UNIT	1	1	1	1	1	1	1
REFRIGERANT	R-22	R-22	R-22	R-22	R-22	R-22	R-22
LOW AMBIENT (HEAD PRESSURE CONTROL)	0°F	0°F	0°F	0°F	0°F	0°F	0°F
*MIN CIRCUIT AMPACITY/MAX FUSE OR C.B.	35.6 / 60	35.6 / 60	20 / 30	17 / 25	20 / 20	20 / 30	20 / 30
*UNIT VOLTS / PHASE / HZ	208 / 3 / 60	208 / 3 / 60	208 / 3 / 60	208 / 3 / 60	208 / 3 / 60	208 / 3 / 60	208 / 3 / 60
MANUFACTURER	TRANE	TRANE	TRANE	TRANE	TRANE	TRANE	TRANE
MODEL (OUTSIDE UNIT)	TWA090A300A	TWA090A300A	2TWA2048A3000A	2TWA2042A3000A	2TWA2036A3000A	2TWA2048A3000A	2TWA2048A3000A

REMARKS:

* SINGLE POINT SERVICE CONNECTION

** LISTED PERFORMANCE DATA IS BASED ON A.R.I STANDARD 210/240 CAPACITY RATING CONDITIONS.

1. CONTRACTOR SHALL PROVIDE THE FOLLOWING: ANTI-SHORT-CYCLE KIT, DEFROST CONTROL, HEAT PUMP COIL GUARDS AND RUBBER-IN-SHEAR ISOLATORS.
2. CONTRACTOR SHALL FOLLOW MANUFACTURER'S RECOMMENDATIONS FOR REFRIGERANT LINE LENGTHS AND SIZES.
3. THE UNITS LISTED AS "HEAT PUMPS" INCLUDE MATCHED INSIDE COIL MOUNTED TO THE AIR HANDLER, AS WELL AS THE EXPANSION VALVES, AND ALL OTHER APPURTENANCES NECESSARY FOR COMPLETE SYSTEMS.
4. MECHANICAL CONTRACTOR SHALL INSTALL HARD DRAWN TYPE "K" COPPER CONDENSATE DRAIN LINE TO DRAINS AS SHOWN ON PLANS.
5. THE INSTALLATION SHALL INCLUDE A PROGRAMMABLE AUTOCHANGEOVER PROGRAMMABLE 3 STAGE HEAT / 2 STAGE COOL THERMOSTAT JOHNSON CONTROLS #T500HPP-1. NOTE TO CONTRACTOR SECOND STAGE COOLING ON SCHEDULED THEROMSTAT WILL NOT BE USED ON THIS PROJECT.
6. CONTRACTOR SHALL PROVIDE AND INSTALL A SMOKE DETECTION SYSTEM WITH A SENSOR FOR EACH AIR HANDLER EXCEEDING 2000 CFM SUPPLY AIR. MOUNT DUCT MOUNTED SENSOR IN THE SUPPLY DUCT AND RETURN DUCT. INTERLOCK SMOKE DETECTION SHUT OFF DEVICE WITH THE AIR HANDLER FANS.
7. THE CONTRACTOR SHALL GUARANTEE ALL INSTALLED EQUIPMENT, MATERIAL, AND WORK INCLUDED IN THIS CONTRACT AGAINST ANY DEFECTS IN MATERIAL OR WORKMANSHIP; AND SHALL SATISFACTORILY CORRECT, AT NO COST TO THE STATE, ANY SUCH DEFECT THAT MAY BECOME APPARENT WITHIN A PERIOD OF ONE YEAR AFTER COMPLETION OF THE INSTALLATION. THE WARRANTY PERIOD SHALL COMMENCE ON THE DATE OF ACCEPTANCE OF THE CONTRACT BY THE STATE. A MANUFACTURER'S 4 YEAR EXTENDED COMPRESSOR WARRANTY (BEYOND THE INITIAL ONE YEAR PERIOD) SHALL BE INCLUDED WHEN OFFERED BY THE MANUFACTURER FOR ALL SIZES OF UNITARY AND SELF-CONTAINED DIRECT EXPANSION EQUIPMENT. INSURANCE POLICIES ARE NOT ACCEPTABLE.
8. ALL COMPONENTS OF EACH HVAC SYSTEM SHALL BE PRODUCTS OF THE SAME MANUFACTURER, AND SHALL BE PERFORMANCE MATCHED WITH PUBLISHED PERFORMANCE RATINGS. HVAC SYSTEMS WITH COMPONENTS FROM DIFFERENT MANUFACTURERS, EVEN SUBSIDIARIES OF THE SAME COMPANY, WILL NOT BE ACCEPTED.
9. ALL INDOOR UNITS SHALL HAVE FLEXIBLE CONNECTIONS ON THE SUPPLY AND RETURN DUCT WITH PLEATED FILTERS INSTALLED.

WALL MOUNTED SPLIT SYSTEM

INDOOR UNIT:	AC-1
*UNIT VOLTS / PHASE / HZ	OUTDOOR UNIT
*MCA / MOCP	N/A
FAN DRIVE TYPE / No. SPEEDS	AUTO / 3
BLOWER FAN (HP)	0.024
NUMBER AND SIZE OF FILTERS (LOW VEL.)	FURNISHED
MANUFACTURER	TRANE
AIR HANDLER MODEL	MCW512AMUAO
No. REFRIGERANT CIRCUITS/ INDOOR UNIT	1
ELECTRIC RESISTANCE HEATER MODEL No.	N/A
OUTDOOR UNIT: (NOTE CAPACITIES LISTED/UNIT)	CU-1
No. OUTDOOR UNITS / INDOOR UNIT	1
**RATED PERFORMANCE BASED ON	311 CFM
**COOLING CAPACITY (TOTAL BTUH)	13,250
**COOLING CAPACITY (SENSIBLE BTUH)	8,215
**EER/SEER MATCHED AIR HANDLER	9.60 / 11.2
No. COMPRESSORS / OUTDOOR UNIT	1
COMPRESSOR TYPE	SCROLL
No. OUTDOOR FANS / OUTDOOR UNIT	1
REFRIGERANT	R-22
LOW AMBIENT (HEAD PRESSURE CONTROL)	30°F
*MIN CIRCUIT AMPACITY/MAX FUSE OR C.B.	11 / 15
*UNIT VOLTS / PHASE / HZ	208 / 1 / 60
MANUFACTURER	TRANE
MODEL (OUTSIDE UNIT)	TTB012C100A

REMARKS:

* SINGLE POINT SERVICE CONNECTION

** LISTED PERFORMANCE DATA IS BASED ON A.R.I STANDARD 210/240 CAPACITY RATING CONDITIONS.

1. CONTRACTOR SHALL FOLLOW MANUFACTURER'S RECOMMENDATIONS FOR REFRIGERANT LINE LENGTHS AND SIZES.
2. THE ABOVE SCHEDULED DUCTLESS SPLIT SYSTEM HAS AN OUTDOOR CONDENSING UNIT AND A WALL MOUNTED AIR HANDLER UNIT WITH REMOTE CONTROL FEATURES. WALL MOUNTED THERMOSTATS ARE ACCEPTABLE.
3. UNIT SHALL INCLUDE A PERMANENT WASHABLE FILTER.
4. MECHANICAL CONTRACTOR SHALL INSTALL HARD DRAWN TYPE "L" COPPER CONDENSATE DRAIN LINE TO DRAINS AS SHOWN ON PLANS.
5. THE CONTRACTOR SHALL GUARANTEE ALL INSTALLED EQUIPMENT, MATERIAL, AND WORK INCLUDED IN THIS CONTRACT AGAINST ANY DEFECTS IN MATERIAL OR WORKMANSHIP; AND SHALL SATISFACTORILY CORRECT, AT NO COST TO THE STATE, ANY SUCH DEFECT THAT MAY BECOME APPARENT WITHIN A PERIOD OF ONE YEAR AFTER COMPLETION OF THE INSTALLATION. THE WARRANTY PERIOD SHALL COMMENCE ON THE DATE OF ACCEPTANCE OF THE CONTRACT BY THE STATE. A MANUFACTURER'S 4 YEAR EXTENDED COMPRESSOR WARRANTY (BEYOND THE INITIAL ONE YEAR PERIOD) SHALL BE INCLUDED WHEN OFFERED BY THE MANUFACTURER FOR ALL SIZES OF UNITARY AND SELF-CONTAINED DIRECT EXPANSION EQUIPMENT. INSURANCE POLICIES ARE NOT ACCEPTABLE.
6. ALL COMPONENTS OF EACH HVAC SYSTEM SHALL BE PRODUCTS OF THE SAME MANUFACTURER, AND SHALL BE PERFORMANCE MATCHED WITH PUBLISHED PERFORMANCE RATINGS. HVAC SYSTEMS WITH COMPONENTS FROM DIFFERENT MANUFACTURERS, EVEN SUBSIDIARIES OF THE SAME COMPANY, WILL NOT BE ACCEPTED.

INFRA-RED RADIANT HEATER SCHEDULE

MARK	MBTU	MANUFACTURER, MODEL/SIZE	DESCRIPTION
HTR-1	100	RE-VERBER-RAY, DX 40-100	40FT LONG, INFRA-RED NATURAL GAS FIRED TUBE HEATER DX SERIES WITH A 100,000 BTUH. INPUT RATING. THE EMITTER & COMBUSTION CHAMBER ARE ALUMINIZED STEEL 16 GAGE 4" O.D. CONSTRUCTION AND COATED WITH A HIGH TEMPERATURE CORROSION RESISTANT COATING. THE POWER SUPPLY IS 120V, 3-WIRE SYSTEM. THE BURNER SHALL BE CONTROLLED WITH A 100% SAFETY SHUT-OFF SYSTEM WITH DUAL DIFFERENTIAL PRESSURE SWITCHES AND A SILICON CARBIDE HOT SURFACE IGNITOR.
HTR-2	50	RE-VERBER-RAY, DX 20-50	20FT LONG, INFRA-RED NATURAL GAS FIRED TUBE HEATER DX SERIES WITH A 50,000 BTUH. INPUT RATING. THE EMITTER & COMBUSTION CHAMBER ARE ALUMINIZED STEEL 16 GAGE 4" O.D. CONSTRUCTION AND COATED WITH A HIGH TEMPERATURE CORROSION RESISTANT COATING. THE POWER SUPPLY IS 120V, 3-WIRE SYSTEM. THE BURNER SHALL BE CONTROLLED WITH A 100% SAFETY SHUT-OFF SYSTEM WITH DUAL DIFFERENTIAL PRESSURE SWITCHES AND A SILICON CARBIDE HOT SURFACE IGNITOR.
HTR-3	60	RE-VERBER-RAY, DX 20-60	20FT LONG, INFRA-RED NATURAL GAS FIRED TUBE HEATER DX SERIES WITH A 60,000 BTUH. INPUT RATING. THE EMITTER & COMBUSTION CHAMBER ARE ALUMINIZED STEEL 16 GAGE 4" O.D. CONSTRUCTION AND COATED WITH A HIGH TEMPERATURE CORROSION RESISTANT COATING. THE POWER SUPPLY IS 120V, 3-WIRE SYSTEM. THE BURNER SHALL BE CONTROLLED WITH A 100% SAFETY SHUT-OFF SYSTEM WITH DUAL DIFFERENTIAL PRESSURE SWITCHES AND A SILICON CARBIDE HOT SURFACE IGNITOR.
HTR-4	75	RE-VERBER-RAY, DX 20-75	20FT LONG, INFRA-RED NATURAL GAS FIRED TUBE HEATER DX SERIES WITH A 75,000 BTUH. INPUT RATING. THE EMITTER & COMBUSTION CHAMBER ARE ALUMINIZED STEEL 16 GAGE 4" O.D. CONSTRUCTION AND COATED WITH A HIGH TEMPERATURE CORROSION RESISTANT COATING. THE POWER SUPPLY IS 120V, 3-WIRE SYSTEM. THE BURNER SHALL BE CONTROLLED WITH A 100% SAFETY SHUT-OFF SYSTEM WITH DUAL DIFFERENTIAL PRESSURE SWITCHES AND A SILICON CARBIDE HOT SURFACE IGNITOR.
T-L	---	COLUMBUS, S2022-11	120V SINGLE STAGE ELECTRIC THERMOSTAT WITH A CONTROL TEMPERATURE RANGE FROM 40° TO 80° F. HOUSED IN A WHITE PLASTIC COVER WITH DIAL ADJUSTMENT. THERMOSTAT SHALL BE CAPABLE OF CONTROLLING UP TO 4 INFRARED TUBE HEATERS.

NOTE: SUPPLY AND INSTALL AN 8" DIRT LEG AND A POINT OF USE GAS COCK WITH A SIDE PRESSURE TAP FOR EACH HEATER. REFER TO INFRARED HEATER DETAILS.

THRU-WALL PACKAGED HEAT PUMP

PACKAGED UNIT:	WHP-1
MANUFACTURER	FRIEDRICH
PACKAGED UNIT MODEL	PH12K
*COOLING CAPACITY (TOTAL BTUH)	11,800
*TOTAL INPUT COOLING WATTS	1,103
*AIR FLOW (HIGH) CFM	325
BLOWER FAN HP	1/10
*MOISTURE REMOVAL (PTS/H)	3.8
*EER	10.7
AUX. HEAT INPUT, WATTS	2,780
AUX. HEATING CURRENT (AMPS)	13.9
*HEATING CAPACITY, BTUH	10,600
*COEFFICIENT OF PERFORMANCE (COP)	3.1
OUTSIDE AIR VENTILATION CAPACITY (CFM)	70
REFRIGERANT	R-22
ELECTRICAL REQUIREMENTS:	
NEMA PLUG FACE	6-20
UNIT VOLTS/PHASE/HZ	208/1/60
MINIMUM AMPACITY (AMPS)	19
MAX. OVERLOAD PROTECTION	20
NUMBER AND SIZE OF FILTERS (LOW VEL.)	SUPPLIED BY MANUFACTURER

REMARKS:

* LISTED PERFORMANCE DATA IS BASED ON A.R.I STANDARD 210/240 CAPACITY RATING CONDITIONS.

1. THE PACKAGED THRU WALL SYSTEM SHALL HAVE A SLINGER RING WHICH ELIMINATES CONDENSATE.
2. UNIT SHALL INCLUDE A PERMANENT WASHABLE FILTER.
3. THERMOSAT AND CONTROLS SHALL BE AN INTEGRAL PART OF THE EQUIPMENT.
5. CONTRACTOR SHALL FOLLOW THE MANUFACTURER'S RECOMMENDATION FOR THE INSTALLATION OF THIS UNIT WHICH SHALL INCLUDE THE FOLLOWING: WALL SLEEVE EXTENSION PXWE, CONDENSATE DRIP PANEL, AND AN ANODIZED ALUMINUM OUTDOOR GRILLE. THE CONTRACTOR SHALL PROVIDE ALL OTHER ASSOCIATED ACCESSORIES REQUIRED FOR A FULLY FUNCTIONAL SYSTEM.
6. NOTE: WALL THRU UNIT SHALL BE EQUIPPED WITH A SLINGER RING ELIMINATING THE NEED FOR A CONDENSATE DRAIN.

MECHANICAL SCHEDULES

NOTE: THIS DRAWING WAS CREATED FOR PRODUCTION ON 22" x 34" SHEET SIZE. DO NOT SCALE PRINTS.

Texas Department of Transportation
125 E. 11th Street
Austin, Texas 78701-2483
(512) 416-3048
Copyright © 2005 Texas Department of Transportation

STATE OF TEXAS
CARL OWEN NIX
93674
LICENSED PROFESSIONAL ENGINEER
03/23/05

SOUTH TRAVIS AREA ENGINEER AND MAINTENANCE FACILITY
AUSTIN, TRAVIS COUNTY
AUSTIN DISTRICT 14

Revisions

Drawn by:
CARL O. NIX, P.E.
Project No.
470400238
Date
03.23.2005
Sheet No.
M4.1
of X sheets

CADFILE: T:\ANTFMD114\US470400238\Acad\MEPM4_1_TO_M4_2.dwg Plotted: Wed, Mar. 23, 2005 @ 11:19 AM By: CNIX

EXHAUST FAN SCHEDULE

UNIT	MODEL#	MANUFACTURER NAME	EXHAUST FAN DESCRIPTION	DESIGN EXHAUST (CFM)	EXHAUST CFM/@ IN. W.G.	MOTOR RPM	INPUT AMPS (HP)	SONES	VOLTS/ PHASE/HZ	DRIVE	INSTALLATION DESCRIPTION	ROOF CURB SIZE	ROOF CURB HEIGHT IN.	DUCT/DAMPER INLET SIZE WXH (IN.)
EF-1	CSP-A250	GREENHECK	IN-LINE	200	205/0.375	950	4.87	4.0	120/1/60	DIRECT	SUSPEND	N/A	N/A	12 7/8 X 10
EF-2	CSP-A710	GREENHECK	IN-LINE	520	566/0.375	1080	4.4	2.7	120/1/60	DIRECT	SUSPEND	N/A	N/A	16 7/8 X 13 1/4
EF-3	CUE-161-C	GREENHECK	UPBLAST	1,680	1,680/0.5	860	1/4	9.5	120/1/60	DIRECT	ROOF CURB	22	12	16 X 16
EF-4	CUE-161-C	GREENHECK	UPBLAST	2,105	2,126/0.25	860	1/4	9.9	120/1/60	DIRECT	ROOF CURB	22	12	16 X 16
EF-5	CUE-161-C	GREENHECK	UPBLAST	2,105	2,126/0.25	860	1/4	9.9	120/1/60	DIRECT	ROOF CURB	22	12	16 X 16
EF-6	CUE-161-C	GREENHECK	UPBLAST	1,680	1,680/0.5	860	1/4	9.5	120/1/60	DIRECT	ROOF CURB	22	12	16 X 16
EF-7	CUE-141-C	GREENHECK	UPBLAST	1,075	1,264/0.25	860	1/8	7.1	120/1/60	DIRECT	ROOF CURB	22	12	16 X 16
EF-8	CSP-A110	GREENHECK	IN-LINE	100	102/0.250	950	0.62	1.3	120/1/60	DIRECT	SUSPEND	N/A	N/A	12 X 9 1/4
EF-W	EX-100	CAR-MON	WELDING	600	600/3.00	N/A	3/4	N/A	120/1/60	DIRECT	BEAM MOUNT	N/A	N/A	N/A
EF-V	DUAL CO-X	CAR-MON	VEHICLE	600	600/3.00	N/A	3/4	N/A	120/1/60	DIRECT	BEAM MOUNT	N/A	N/A	N/A

REMARKS:

1. EF-1, EF-8 DUCTWORK SHALL TERMINATE AT PITCHED ROOF JACK (GREENHECK MODEL# RJ 6X9).
2. EF-2, DUCTWORK SHALL TERMINATE AT PITCHED ROOF JACK (GREENHECK MODEL# RJ 10X10).
3. EF-1, EF-2, EF-8 INTERLOCK EXHAUST FAN WITH LIGHT SWITCHES. (SEE ELECTRICAL).
5. EF-3, EF-6, INTERLOCK EXHAUST FAN WITH PROPANE LEAK DETECTION CONSOLE. (SEE ELECTRICAL). PROVIDE ALUMINUM RUB RING, AND BAKED PHENOLIC COATING ON ALL SURFACES EXPOSED TO AIRFLOW. MOTOR SHALL BE EXPLOSION PROOF AND MOUNTED OUT OF THE AIR STREAM.
6. EF-W, WELDING EXHAUST ASSEMBLY WITH CMW-9 FAN, 10 FEET TYPE PT WELDPROOF TUBING, SERIES EX-WB WALL PLATFORM AND "M" FUME RECEPTOR FITTING. CONTRACTOR SHALL INSTALL UNIT PER MANUFACTURER'S RECOMMENDATIONS. DUCT EXHAUST TO SCHEDULED LOUVER.
7. EF-V, VEHICLE EXHAUST PACKAGE, WITH SPRING ASSIST BALANCERS AND SLINGS, TWO 5" TYPE CLX HIGH TEMPERATURE TUBING, 30 FEET EACH, EPDM EXHAUST PIPE ADAPTERS CAR-MON SERIES CMW-9 FAN. ASSEMBLY SHALL BE SUITABLE FOR SIDE WALL MOUNTING AND SHALL BE MOUNTED PER MANUFACTURERS RECOMMENDATIONS. DUCT EXHAUST TO SCHEDULED LOUVER.
5. ALL ROOF JACKS SHALL BE INSTALLED BY ROOFER PER ARCHITECTURAL PLANS AND SPECIFICATIONS. SEE KEYED NOTES IN PLANS FOR EACH ROOF JACK LOCATION. SUSPEND EACH INLINE CABINET FAN WITH HANGING VIBRATION ISOLATORS.
6. PROVIDE AND INSTALL A BACKDRAFT DAMPER AND BIRDSREEN PROVIDED BY FAN MANUFACTURER ON ALL FANS.
7. CONTRACTOR SHALL INSTALL AND PROVIDE ROOF CURBS WITH A DAMPER SHELF FOR ALL ROOF MOUNTED EXHAUST FANS. CONTRACTOR IS RESPONSIBLE FOR MATCHING ROOF PROFILE AND PITCH ON ALL ROOF CURBS.
8. NOTE ALL EXHAUST FANS SHALL BE RUNNING WHILE PERFORMING TESTING AND AIR BALANCING MEASUREMENTS.

FIRE DAMPER SCHEDULE

MARK	MANUFACTURER, MODEL/SIZE	DESCRIPTION
FRD	MANUFACTURED BY RUSKIN IBD2 STYLE A CURTAIN TYPE STATIC SIZE: 6 in. W x 12 in. H	1-1/2 HOUR UL LISTED FIRE DAMPER WITH A 212'F FUSIBLE LINK.

DIFFUSER / GRILLE SCHEDULE

MARK	MANUFACTURER, MODEL/SIZE	DESCRIPTION
S12	MANUFACTURED BY TITUS TMS-AA-12-24X24-3-26-EG-IB-D75	FULL FACE T-BAR LAY-IN STYLE SQUARE CEILING DIFFUSER. ALL ALUMINUM CONSTRUCTION WITH FACTORY WHITE FINISH, WITH REMOVABLE 3-CONE INNER ASSEMBLIES; REMOVABLE BUTTON PLUG FOR ACCESS TO DAMPER OPERATOR AFTER INSTALLATION. INTEGRAL OPPOSED BLADE DAMPER COMPLETE WITH ROUND EQUALIZING GRID AND FACTORY INSTALLED ½" THICK FOIL BACKED INSULATION.
S10	MANUFACTURED BY TITUS TMS-AA-10-24X24-3-26-EG-IB-D75	
S8	MANUFACTURED BY TITUS TMS-AA-8-24X24-3-26-EG-IB-D75	
S6	MANUFACTURED BY TITUS TMS-AA-6-24X24-3-26-EG-IB-D75	
SG10	MANUFACTURED BY TITUS TMS-AA-10-24X24-1-26-EG-IB-D75	SURFACE MOUNT STYLE SQUARE CEILING DIFFUSER. ALL ALUMINUM CONSTRUCTION WITH FACTORY WHITE FINISH, WITH REMOVABLE 3-CONE INNER ASSEMBLIES; REMOVABLE BUTTON PLUG FOR ACCESS TO DAMPER OPERATOR AFTER INSTALLATION. INTEGRAL OPPOSED BLADE DAMPER COMPLETE WITH ROUND EQUALIZING GRID AND FACTORY INSTALLED ½" THICK FOIL BACKED INSULATION.
SG8	MANUFACTURED BY TITUS TMS-AA-8-24X24-1-26-EG-IB-D75	
SG6	MANUFACTURED BY TITUS TMS-AA-6-12X12-1-26-EG-IB-D75	
RD	MANUFACTURED BY TITUS 50F-24X24-3-26-A	T-BAR LAY-IN STYLE 24" X 24" SQUARE 1/2" X 1/2" X 1/2" EGGCRATE CORE CEILING RETURN GRILLE. ALL ALUMINUM CONSTRUCTION WITH FACTORY WHITE FINISH.
E	MANUFACTURED BY TITUS 50F-F-24X24-3-26-A	T-BAR LAY-IN STYLE 24" X 24" SQUARE 1/2" X 1/2" X 1/2" EGGCRATE CORE CEILING EXHAUST GRILLE WITH FILTER FRAME. INSTALL A PLEATED FILTER. ALL ALUMINUM CONSTRUCTION WITH FACTORY WHITE FINISH. TRANSISTION DUCT TO FIT GRILLE.
EG	MANUFACTURED BY TITUS 50F-F-24X24-1-26-A	SURFACE MOUNT STYLE 24" X 24" SQUARE 1/2" X 1/2" X 1/2" EGGCRATE CORE CEILING EXHAUST GRILLE WITH FILTER FRAME. ALL ALUMINUM CONSTRUCTION WITH FACTORY WHITE FINISH. TRANSISTION DUCT TO FIT GRILLE.

NOTE: DO NOT USE INTEGRAL OPPOSED BLADE DAMPERS IN GRILLES FOR BALANCING. UNLESS NOTED OTHERWISE. SUPPORT ALL T-BAR LAY IN GRILLES AT ALL FOUR CORNERS. SUPPORT ALL FLUSH MOUNT SIDEWALL REGISTERS, GRILLES AND ACCESS DOORS ON ALL FOUR SIDES BY PROVIDING BLOCKING IN FRAMING.

GRAVITY INTAKE/RELIEF VENTILATORS AND LOUVER SCHEDULE

MARK	MANUFACTURER, MODEL/SIZE	DESCRIPTION
GIV-1	MANUFACTURED BY GREENHECK FHI AND WD-410 FAN CURB: 32 in. W x 32 in. H FAN THROAT: 24 in. W x 24 in. H INTAKE DAMPER: 24 in. W x 24 in. H	GRAVITY INTAKE FABRA HOOD AND HORIZONTAL MOUNT FLANGLESS SPRING CLOSED INTAKE BACKDRAFT DAMPER. HOOD SHALL BE LOW PROFILE WITH AN ARCHED HOOD PANEL HEAVY GAGE GALVANIZED STEEL WITH FACTORY APPLIED BAKED ENAMEL FINISH, COLOR SELECTED BY ARCHITECT, APPROX. FREE AREA 4.0 SQFT. PRESSURE DROP ACROSS HOOD SHALL BE LESS THAN 0.149 IN. W.G. INSTALL WITH HEAVY GAGE ALUMINUM BIRDSCREEN. ALUMINUM DAMPER BLADES SHALL START TO OPEN AT 0.014 AND FULL OPEN AT 0.12 AT PRESSURE DROP IN. W.G. DUCT INTAKE AIR PARALLEL WITH ROOF DECK DROP DOWN AT WALL TO FLOOR 24"X24", 18 GAUGE SHEETMETAL LEAVE BOTTOM OF DUCT OPEN 24" A.F.F.
LD-1	MANUFACTURED BY GREENHECK ESJ-401 AND EM-30 SIZE: 18 in. W x 18 in. H	FLANGED EXTRUDED ALUMINUM STATIONARY LOUVER AND VERTICAL MOUNT FLANGLESS EXHAUST BACKDRAFT DAMPER IN BUILDING EXTERIOR WALL. LOUVER SHALL BE HEAVY GAGE EXTRUDED WITH FACTORY APPLIED FINISH, COLOR SELECTED BY ARCHITECT, APPROX. FREE AREA 0.89 SQFT. INSTALL WITH EXPANDED ALUMINUM BIRDSCREEN. COUNTERBALANCED DUCTED DAMPER BLADES SHALL START TO OPEN AT 0.01 AND FULL OPEN AT 0.055 AT PRESSURE DROP IN. W.G.
L-1	MANUFACTURED BY GREENHECK ESJ-401 SIZE: 36 in. W x 48 in. H	FLANGED EXTRUDED ALUMINUM STATIONARY LOUVER AND VERTICAL MOUNT FLANGE ON EXTERIOR WALL. LOUVER SHALL BE HEAVY GAGE EXTRUDED WITH FACTORY APPLIED FINISH, COLOR SELECTED BY ARCHITECT, APPROX. FREE AREA 6. SQFT. INSTALL WITH EXPANDED ALUMINUM BIRDSCREEN.

NOTE: DO NOT USE INTEGRAL OPPOSED BLADE DAMPERS IN GRILLES FOR BALANCING. UNLESS NOTED OTHERWISE. SUPPORT ALL T-BAR LAY IN GRILLES AT ALL FOUR CORNERS. SUPPORT ALL FLUSH MOUNT SIDEWALL REGISTERS, GRILLES AND ACCESS DOORS ON ALL FOUR SIDES BY PROVIDING BLOCKING IN FRAMING.

MECHANICAL SCHEDULES

NOTE: THIS DRAWING WAS CREATED FOR PRODUCTION ON 22" x 34" SHEET SIZE. DO NOT SCALE PRINTS.

CADFILE: T:\MNTFMD14AUS\470400238\Acad\MEP\M4_1_TO_M4_2.dwg Plotted: Wed, Mar. 23, 2005 @ 1:49 PM By: CNIX

Texas Department of Transportation
125 E. 11th Street
Austin, Texas 78701-2483
(512) 416-3046

Copyright © 2005 Texas Department of Transportation

STATE OF TEXAS
CARL OWEN NIX
93674
LICENSED PROFESSIONAL ENGINEER
9/23/05

SOUTH TRAVIS AREA ENGINEER AND MAINTENANCE FACILITY
AUSTIN, TRAVIS COUNTY
AUSTIN DISTRICT 14

Revisions

Drawn by:
CARL O. NIX, P.E.
Project No.
470400238
Date
03.23.2005
Sheet No.
M4.2
of X sheets

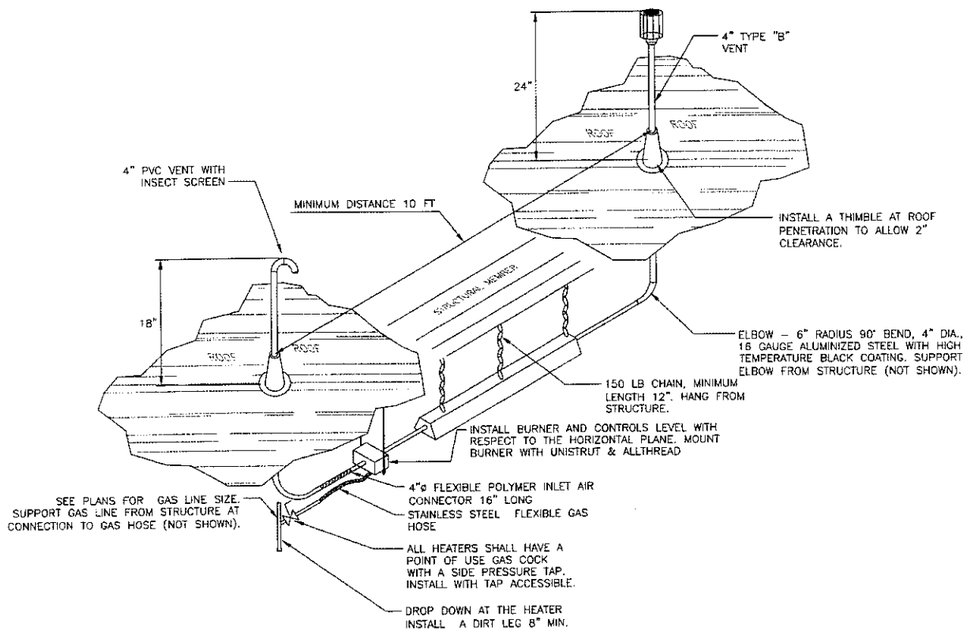

1 INFRARED TUBE HEATER
SCALE: NOT TO SCALE

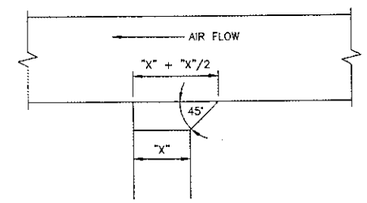

2 DUCT "BOOT" TAP DETAIL
SCALE: NOT TO SCALE

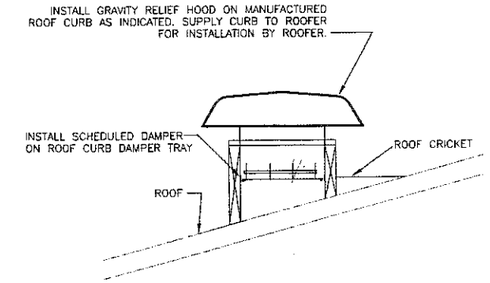

3 ROOF MOUNTED GRAVITY RELIEF HOOD
SCALE: NOT TO SCALE

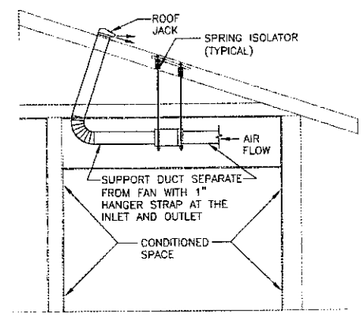

4 INLINE CABINET EXHAUST FAN TO ROOF JACK
SCALE: NOT TO SCALE

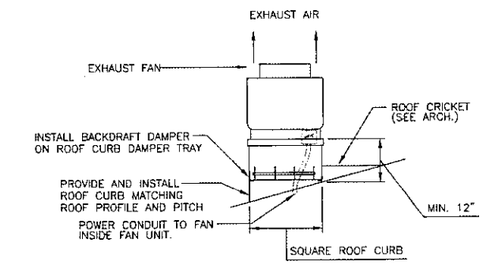

5 ROOF MOUNTED EXHAUST FAN
SCALE: NOT TO SCALE

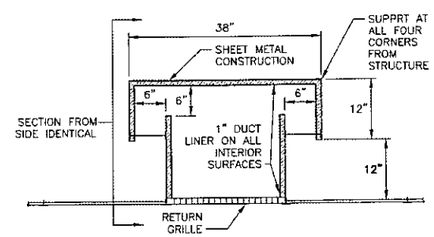

6 RETURN GRILLE SOUND BOX (SECTION CUT)
SCALE: NOT TO SCALE

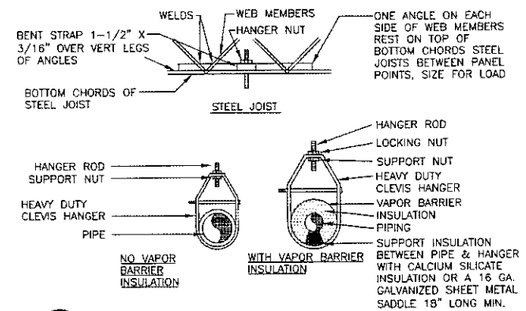

7 CLEVIS HANGERS
SCALE: NOT TO SCALE

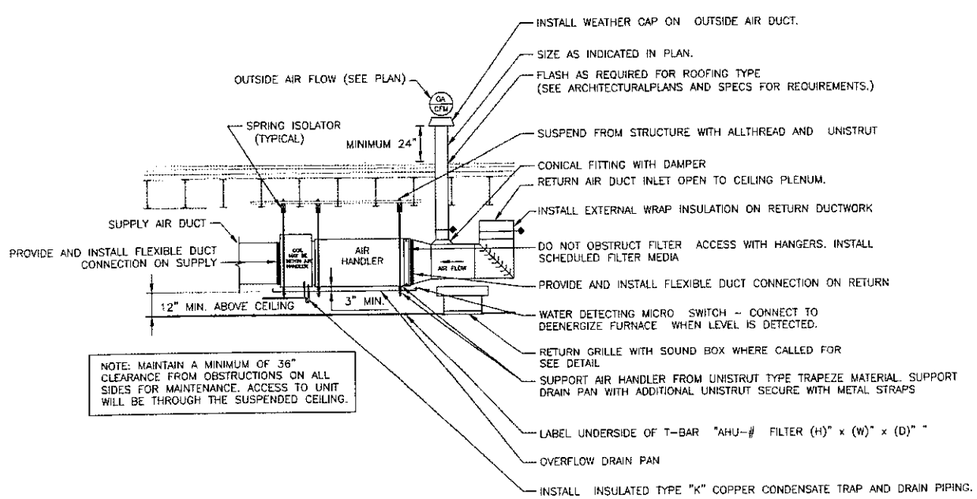

8 FREE RETURN INDOOR UNIT ABOVE CEILING
SCALE: NOT TO SCALE

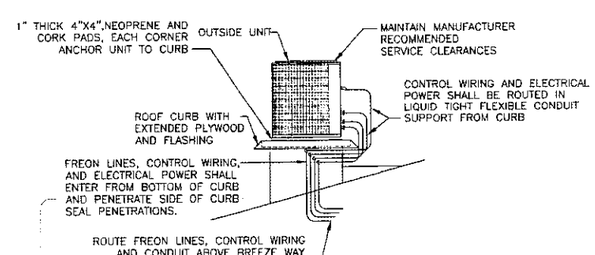

9 OUTSIDE UNIT ROOF CURB
SCALE: NOT TO SCALE

MECHANICAL DETAILS

NOTE: THIS DRAWING WAS CREATED FOR PRODUCTION ON 22" x 34" SHEET SIZE. DO NOT SCALE PRINTS.

Texas Department of Transportation
125 E. 11th Street
Austin, Texas 78701-2483
(512) 416-3048

Copyright © 2005 Texas Department of Transportation

STATE OF TEXAS
CARL OWEN NIX
93674
LICENSED PROFESSIONAL ENGINEER
3/23/05

SOUTH TRAVIS AREA ENGINEER AND MAINTENANCE FACILITY
AUSTIN, TRAVIS COUNTY
AUSTIN DISTRICT 14

Revisions

Drawn by: CARL O. NIX, P.E.
Project No. 470400238
Date 03.23.2005
Sheet No.
M5.1
of X sheets

CADFILE: T:\MNTFIND14\US\470400238\Acad\MEPM5_1.dwg Plotted: Wed, Mar 23, 2005 @ 11:20 AM By: CNIX

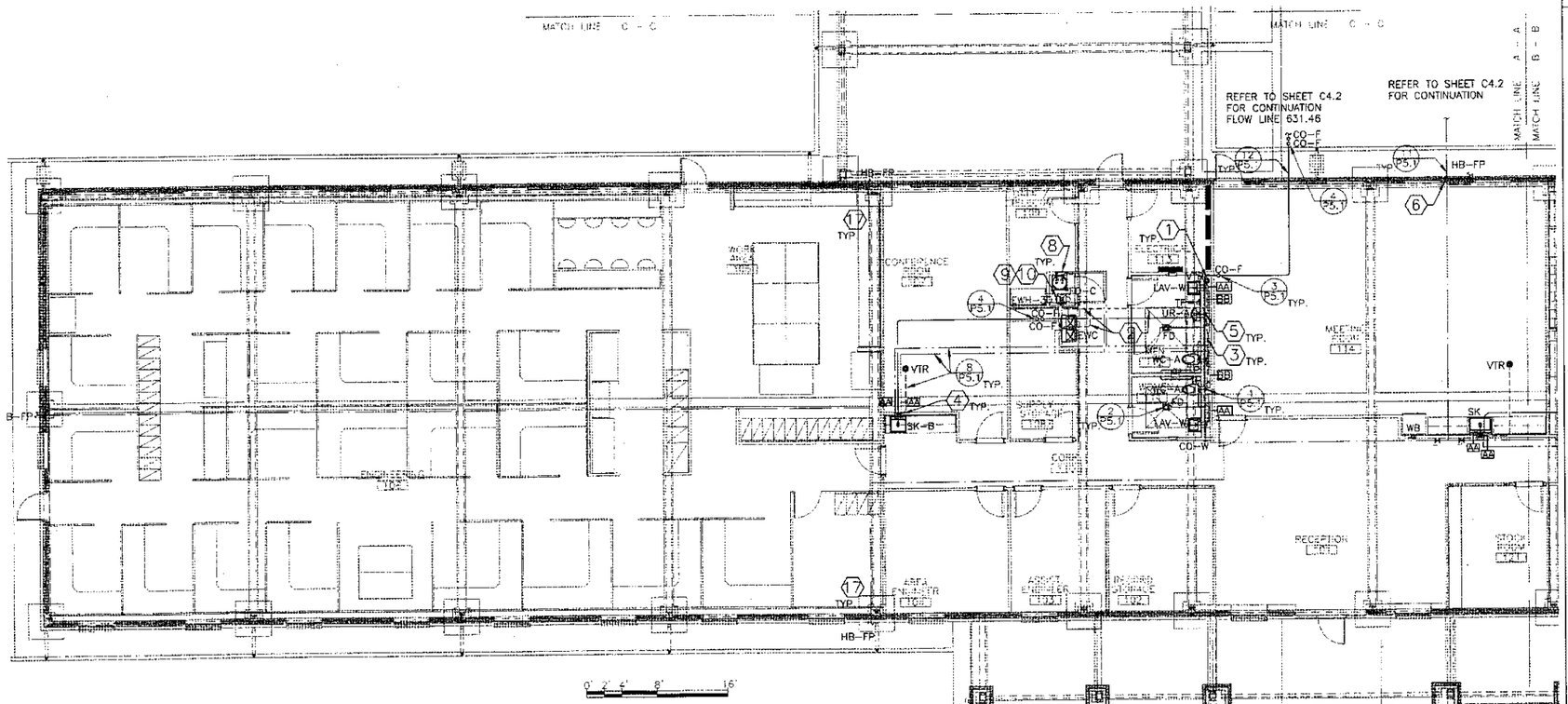

NORTH

1 FLOOR PLAN KEY PLAN BLDG #1

SCALE: 1/8" = 1'-0"

SYMBOL SCHEDULE

	SANITARY WASTE PIPING
	SANITARY VENT PIPING
	COLD WATER PIPING
	HOT WATER SUPPLY
	HOT WATER RETURN
HHW	HEATING HOT WATER SUPPLY
HHR	HEATING HOT WATER RETURN
CHS	CHILLED WATER SUPPLY
CHR	CHILLED WATER RETURN
NG	NATURAL GAS PIPING
LPG	LIQUID PETROLEUM GAS
CND	CONDENSATE DRAIN LINES
REF	REFRIGERANT PIPING
CA	COMPRESSED AIR PIPING
OIL	LUBRICANT PIPING
GR	GREASE PIPING
	HOSE BIBB
AA	WATER HAMMER ARRESTOR
	TEMP & PRESSURE VALVE
	BACKFLOW PREVENTER
	CHECK VALVE
CHR	CONTROL VALVE
NC	PRESURE REDUCING VALVE
	PIPE DROP
	PIPE RISER
	P-TRAP
	VALVE IN VALVE BOX
CHR	GATE VALVE
	BALL VALVE
VTR	VENT THRU ROOF
NG	TRENCH UNDER PAVEMENT INSTALL WITH SLEEVE

KEYED NOTES -

1. EXTEND SANITARY VENT THROUGH ROOF LINE AT LEAST 12" MAINTAINING AT LEAST 10FT FROM ANY OPENING IN BUILDING AND TERMINATING ON THE BACKSIDE OF RIDGE CAP.
2. MANIFOLD VENTS TOGETHER SLOPE AWAY FROM VENT THROUGH ROOF.
3. SANITARY VENT UP INSIDE CHASE, MANIFOLD VENTS TOGETHER SLOPE AWAY FROM VENT THROUGH ROOF.
4. SANITARY VENT UP INSIDE WALL, ROUTE ABOVE CEILING.
5. WASTE DOWN THROUGH SLAB, COORDINATE WITH STRUCTURAL TO CLEAR GRADE BEAMS.
6. BUILDING DOMESTIC WATER SUPPLY, ROUTE UNDER SLAB AND STUB UP IN EXTERIOR WALL TO ABOVE CEILING.
7. PIPE WATER DOWN INSIDE CHASE, ROUTED FROM ABOVE CEILING.
8. PIPE WATER DOWN INSIDE WALL, ROUTED FROM ABOVE CEILING.
9. PROVIDE AND INSTALL WATER HEATER DRAIN PAN WITH 1"ø TYPE "K" COPPER HARD DRAWN DRAIN FROM PAN TO FLOOR DRAIN ELBOW IN THE DOWN POSITION.
10. PROVIDE AND INSTALL WATER HEATER T&P VALVE WITH 1"ø TYPE "K" COPPER HARD DRAWN RELIEF DRAIN FROM VALVE TO FLOOR DRAIN ELBOW IN THE DOWN POSITION.
11. GAS LINE SHALL RUN UNDERGROUND UP TO THE BUILDING. CONTRACTOR SHALL INSTALL AND PROVIDE A TRANSITION GAS RISER, GAS PLUG COCK VALVE AND UNION. INSTALL VALVE 24" AFG AT THE TOP OF THE GAS RISER IN THE HORIZONTAL POSITION. RUN GAS LINE THROUGH EXTERIOR WALL AND INTO THE BUILDING. PROVIDE LEAK SEAL TO ENSURE A WEATHER TIGHT PENETRATION. PIPE UP AND ROUTE INSIDE BUILDING JUST BELOW BOTTOM OF THE ROOF PERLINS DROP DOWN TO EACH HEATER.
12. PIPE DOWN EXPOSED. INSTALL ANCHORS TO SUPPORT PIPE AND HOSE BIBB TO WALL, INSTALL A 3/4" HOSE BIBB ON INSIDE WALL, 18" A.F.F.
13. PROVIDE A VERTICAL DROP AND DIRT LEG AT EACH HEATER. REFER TO HEATER DETAILS.
14. PROVIDE AND INSTALL AN ACCESSIBLE LOCKING BALL VALVE, LOCKED IN THE OPEN POSITION.
15. PROVIDE AND INSTALL AN ADDITIONAL QUICK DISCONNECT TO AIR DROP WITH AN ADDITIONAL QUICK DISCONNECT TO THE EXTERIOR OF THE BUILDING.
16. ALL PIPING IN OPEN BAYS, PIPE UP, ROUTE INSIDE BUILDING JUST BELOW BOTTOM OF ROOF DECKING.
17. FIRE CHALK ALL PENETRATIONS IN FIRE WALL. (SEE GENERAL NOTES).

APPLIES TO ALL P-SHEETS
GENERAL NOTES

1. NOTE THAT CONSTRUCTION DRAWINGS ARE DIAGRAMMATIC BY THEIR NATURE, AND ARE NOT INTENDED TO SHOW EVERY CONNECTION IN DETAIL OR EVERY PIPE OR CONDUIT IN ITS EXACT LOCATION. FEATURES AND COMPONENTS NOT SHOWN ARE SUBJECT TO THE REQUIREMENTS OF STANDARDS REFERENCED ELSEWHERE IN THE CONSTRUCTION DOCUMENTS. THE CONTRACTOR SHALL COORDINATE THE VARIOUS TRADES IN ORDER TO AVOID INTERFERENCE BETWEEN THE VARIOUS SEGMENTS OF THE PROJECT. CONTRACTOR SHALL VERIFY ALL CRITICAL BUILDING DIMENSIONS FROM THE ARCHITECTURAL AND STRUCTURAL DRAWINGS.
2. ALL WORK SHALL BE INSTALLED PARALLEL OR PERPENDICULAR TO THE BUILDING LINES UNLESS NOTED OTHERWISE.
3. ALL COLD AND HOT WATER PIPING ABOVE SLAB SHALL BE HARD DRAWN TYPE "K" COPPER.
4. ALL COLD AND HOT WATER PIPING UNDER SLAB SHALL BE SOFT DRAWN TYPE "K" COPPER. MINIMIZE JOINT CONNECTIONS UNDER SLAB
5. COPPER SWEAT CONNECTIONS SHALL BE USED IN THE ASSEMBLY OF COPPER PIPING. USE ONLY SILVER OR ANTIMONY SOLDER, LEAD IS PROHIBITED.
6. USE DIELECTRIC UNIONS AT ALL CONNECTIONS BETWEEN COPPER AND GALVANIZED, IRON, OR STEEL PIPING.
7. USE DIELECTRIC UNIONS ON WATER HEATER CONNECTIONS. BOND HOT WATER AND COLD WATER PIPING WITH No. 8 AMERICAN WIRE GAUGE COPPER WIRE AND COPPER PIPE CLAMPS TO MAINTAIN GROUNDING ON HOT WATER PIPING. INSTALL AND PROVIDE FLEXIBLE CORRUGATED COPPER CONNECTORS PLACE LOOP IN CONNECTOR MAXIMUM TOTAL LENGTH 24".
8. ALL WATER PIPING SHALL SLOPE A MINIMUM OF 1/8" PER FOOT (1%) TO DRAIN TO ALL FIXTURES, HOSE BIBBS AND HOT WATER HEATERS TO ALLOW FOR WINTERIZATION.
9. ALL WASTE PIPING UNDER SLAB AND UP TO 5 FEET OUTSIDE THE BUILDING SHALL BE SERVICE WEIGHT CAST IRON BELL AND SPIGOT LABELED ASTM-74.
10. ALL WASTE AND VENT PIPING ABOVESLAB SHALL BE NO-HUB CAST IRON LABELED ASTM-888.
11. ALL HORIZONTAL WASTE AND VENT PIPING SHALL SLOPE A MINIMUM OF 1/8" PER FOOT (1%), AND A MAXIMUM OF 1/4" PER FOOT (2%), TOWARD THE DIRECTION OF WASTE FLOW.
12. DO NOT PENETRATE GRADE BEAMS UNLESS APPROVED BY STRUCTURAL ENGINEER AND AS NOTED OTHERWISE.
13. ALL FLOOR DRAINS SHALL BE FITTED WITH A TRAP PRIMER ACTIVATED BY A SURGE IN PRESSURE. RUN 1/2" COPPER TUBING FROM FLOOR DRAIN TO THE NEAREST AVAILABLE TRAP PRIMER DISTRIBUTION UNIT. INSTALL IN-LINE TRAP PRIMERS IN ADJACENT WATER SUPPLY FLUSH VALVE LINES AS INDICATED IN RISER DIAGRAMS.
14. ALL EXPOSED PIPING UNDER LAVATORIES SHALL BE INSULATED WITH SPECIFIED INSULATION.
15. INSULATION FOR COLD WATER PIPING STARTS AT THE BOTTOM OF THE SLAB PENETRATION. INSULATE ALL HOT WATER PIPING. (SEE SPECIFICATIONS).
16. ROOF CONTRACTOR SHALL INSTALL ALL ROOF PENETRATIONS IN THE APPROXIMATE LOCATIONS SHOWN IN PLANS. ALL ROOF PENETRATIONS SHALL BE INSTALLED PER ARCHITECTURAL DRAWINGS AND SPECIFICATIONS.
17. SUPPORT ALL ABOVE GRADE PIPING ON 6 FOOT CENTERS. USE UNISTRUT AND BRACES/TRAPEZES MADE OF UNISTRUT OR PER MANUFACTURER RECOMMENDATIONS.
18. CONTRACTOR IS RESPONSIBLE FOR COORDINATING, FILLING AND PAYING FOR ALL ASSOCIATED FEES AND PERMITS AS PART OF THIS BID PACKAGE.
19. SLEEVE ALL SLAB PENETRATIONS WITH SCHEDULE 40 PVC. SLEEVE SHALL BE 2 PIPE SIZES LARGER THAN PENETRATING PIPE. MAINTAIN INSULATION THROUGH SLEEVES.
20. SLEEVE ALL WALL PENETRATIONS WITH SLEEVE 2 PIPE SIZES LARGER THAN PENETRATING PIPE. SLEEVE AND PENETRATING PIPE SHALL BE CONSTRUCTED FROM THE SAME MATERIAL. MAINTAIN INSULATION THROUGH SLEEVES.
21. ALL EXTERIOR, SLAB AND CONDITIONED TO NON-CONDITIONED PENETRATIONS, PACK ANNULAR SPACE WITH MINERAL WOOL. SEAL EACH EXTERIOR END AND TOP END OF SLAB PENETRATION WITH SEALANT (SEE ARCHITECTURAL SPECIFICATIONS).
22. FIRE CHAULK ALL PENETRATIONS WHERE ARCHITECTURAL PLANS CALL FOR FIRE RATED CONSTRUCTION WALLS. STOP INSULATION SHORT OF SLEEVE FILL ANNULAR SPACES WITH FIRE RATED CHAULK.
23. ALL SANITARY DRAINAGE, VENT PIPING, FUEL PIPING, HOT AND COLD WATER SHALL BE PRESSURE TESTED BY THE CONTRACTOR AT WHICH TIME THE OWNER'S REPRESENTITIVE SHALL WITNESS THE PRESSURE TEST. REFERENCE THE SPECIFICATIONS FOR FURTHER REQUIREMENTS.

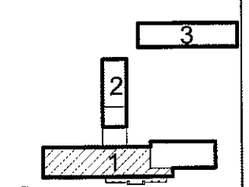

NORTH

KEY PLAN

PLUMBING PLAN-BLDG.#1

NOTE: THIS DRAWING WAS CREATED FOR PRODUCTION ON 22" x 34" SHEET SIZE. DO NOT SCALE PRINTS.

Texas Department of Transportation
125 E. 11th Street
Austin, Texas 78701-2483
(512) 416-3048

Copyright © 2005 Texas Department of Transportation

STATE OF TEXAS
CARL OWEN NIX
93674
LICENSED PROFESSIONAL ENGINEER
3-23-05

SOUTH TRAVIS AREA ENGINEER AND MAINTENANCE FACILITY
AUSTIN, TRAVIS COUNTY
AUSTIN DISTRICT 14

Revisions

Drawn by:
CARL O. NIX, P.E.
Project No.
470400238
Date
03.23.2005
Sheet No.

P2.1
of X sheets

CADFILE: T:\MNTF\MD14\US\470400238\Acad\MEP\P2_1_TO_P3_2.dwg Plotted: Wed, Mar. 23, 2005 @ 1:16 PM By: CNIX

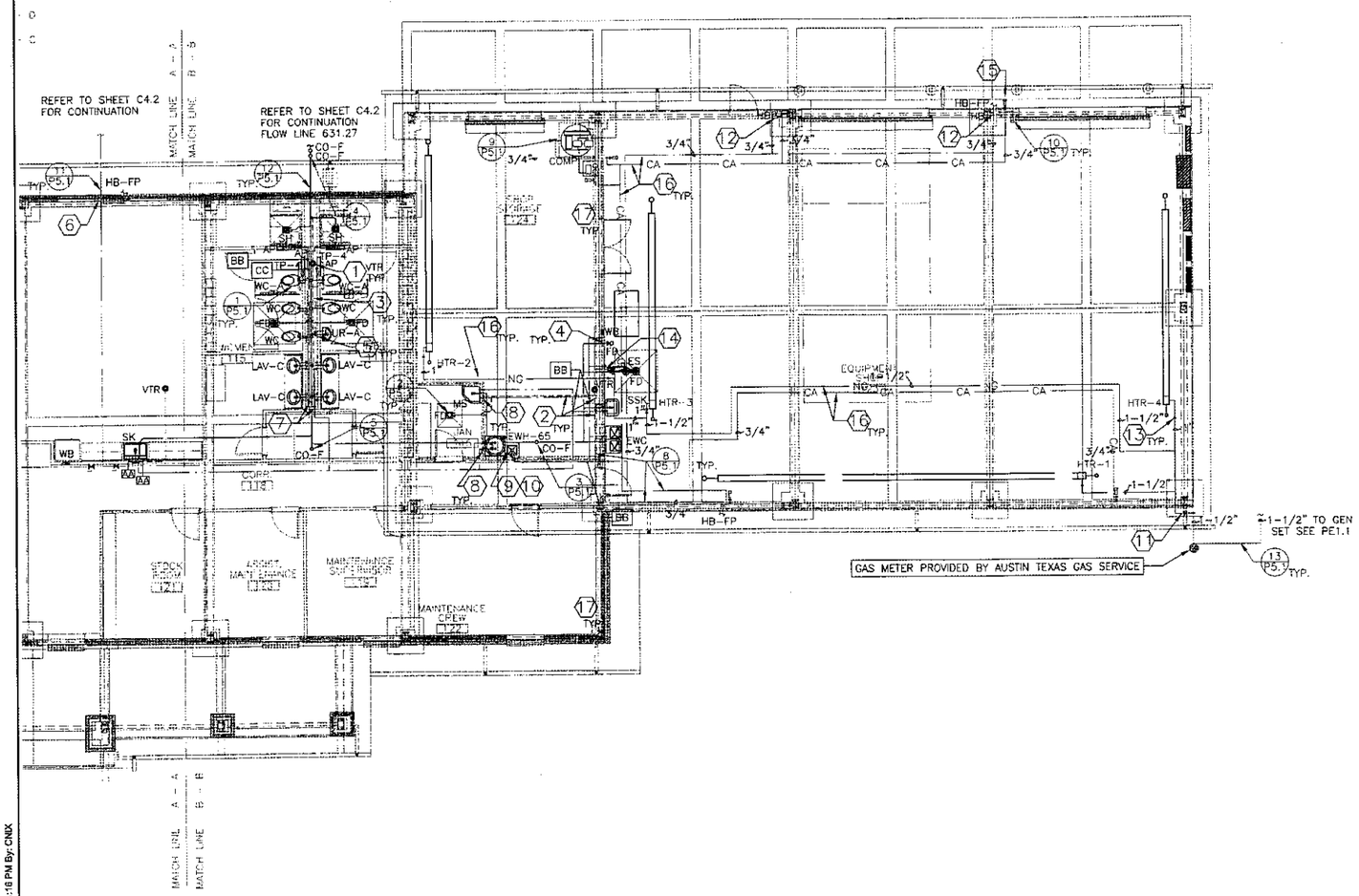

1 FLOOR PLAN KEY PLAN BILDG#1
SCALE: 1/8" = 1'-0"

NORTH

0' 2' 4' 8' 16'

SEE P2.1 FOR GENERAL AND KEYED NOTES

APPLIES TO ALL FUEL GAS PIPING
GENERAL NOTES

1. NOTE THAT CONSTRUCTION DRAWINGS ARE DIAGRAMMATIC BY THEIR NATURE, AND ARE NOT INTENDED TO SHOW EVERY CONNECTION IN DETAIL OR EVERY PIPE OR CONDUIT IN ITS EXACT LOCATION. FEATURES AND COMPONENTS NOT SHOWN ARE SUBJECT TO THE REQUIREMENTS OF STANDARDS REFERENCED ELSEWHERE IN THE CONSTRUCTION DOCUMENTS. THE CONTRACTOR SHALL COORDINATE THE VARIOUS TRADES IN ORDER TO AVOID INTERFERENCE BETWEEN THE VARIOUS SEGMENTS OF THE PROJECT. CONTRACTOR SHALL VERIFY ALL CRITICAL BUILDING DIMENSIONS FROM THE ARCHITECTURAL AND STRUCTURAL DRAWINGS.

2. ALL FUEL GAS PIPING SHALL BE INSTALLED PARALLEL OR PERPENDICULAR TO THE BUILDING LINES UNLESS NOTED OTHERWISE. ALL CONNECTIONS SHALL BE MADE AT THE TOP OR SIDE OF FUEL GAS PIPING. CONNECTIONS TO THE BOTTOM SIDE OF GAS PIPING IS NOT ACCEPTABLE.

3. ALL FUEL GAS PIPING UP TO 2" SHALL BE SCHEDULE 40 BLACK STEEL, THREADED WITH NPT PIPE THREADS. ALL JOINTS SHALL BE SEALED WITH TEFLON BASED PIPE DOPE MATERIAL AND TELFLON TAPE, INSOLUBLE IN THE PRESENCE OF GAS. ALL NATURAL GAS PIPING ABOVE 2" SHALL BE BLACK STEEL WITH WELDED FITTINGS. ALL WELDED JOINTS SHALL BE MADE BY A CERTIFIED PIPE WELDER AS DEFINED IN THE LATEST EDITION OF THE UNIFORM PLUMBING CODE.

4. SUPPORT ALL PIPING ON 6' CENTERS. USE UNISTRUT AND BRACES/TRAPEZES MADE OF UNISTRUT OR PER MANUFACTURER RECOMMENDATIONS.

5. PRESSURE TEST (DOWNSTREAM OF SERVICE REGULATOR) SHALL BE PERFORMED BY CONTRACTOR BEFORE INTRODUCING FUEL GAS TO THE SYSTEM AT WHICH TIME THE OWNER'S REPRESENTITIVE SHALL WITNESS THE TEST. CONTRACTOR SHALL ISOLATE ALL PRESSURE REGULATORS DURING LEAK TEST AND FIX ALL LEAKS. REFERENCE THE SPECIFICATIONS FOR ADDITIONAL REQUIREMENTS.

6. CONTRACTOR SHALL MEET THE MANUFACTURER'S RECOMMENDED INLET PRESSURE ON ALL RADIANT HEATERS TO ACHIEVE A FULLY FUNCTIONAL HEATING SYSTEM.

7. TAG ALL FUEL GAS PRESSURE REGULATORS SHOWING OPERATING PRESSURE IN INCHES OF WATER COLUMN AND LABELED NATURAL GAS.

8. CONTRACTOR SHALL INSTALL A UNION AND A FUEL GAS PLUG VALVE AT EVERY BUILDING ENTRY.

9. FUEL GAS PIPING INSTALLED BELOW GRADE SHALL BE EFFECTIVELY SUPPORTED AT ALL POINTS ON UNDISTURBED OR WELL COMPACTED SAND (SEE DETAILS).

10. ALL PROTECTIVELY COATED UNDERGROUND FUEL GAS PIPING SHALL BE INSPECTED BY OWNER'S REPRESENTATIVE FOR DAMAGE AND OR IMPERFECTIONS TO THE PIPE COATING. CONTRACTOR SHALL REPAIR NOTED AREAS AND HOLIDAYS PRIOR TO BACKFILLING TRENCH.

11. CONTRACTOR SHALL INSTALL A SLEEVE WHEN FUEL GAS PIPING PASSES UNDER PAVEMENT AND/OR CONCRETE. THE INSTALLED SLEEVE SHALL BE A MINIMUM OF TWO SIZES LARGER THAN THE SLEEVED GAS PIPING, THE SLEEVE SHALL BE SCHEDULE 80 PVC, OR C-900 PVC.

12. ALL UNDERGROUND FUEL GAS SUPPLY PIPING SHALL BE POLYMER COATED BLACK PIPE SCHEDULE 40. GAS PIPING INSTALLED UNDERGROUND IN EXTERIOR LOCATIONS SHALL BE PROTECTED FROM CORROSION BY APPROVED COATINGS MACHINE APPLIED AS SPECIFIED. FIELD WRAPPING SHALL BE INSTALLED AT JOINTS AND AREAS WHERE COATINGS HAVE BEEN DAMAGED OR INTERRUPTED.

13. ALL FUEL GAS PIPING SHALL BE "SAFETY YELLOW".

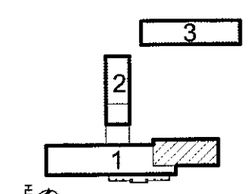

NORTH KEY PLAN

PLUMBING PLAN-BLDG.#1

NOTE: THIS DRAWING WAS CREATED FOR PRODUCTION ON 22" x 34" SHEET SIZE. DO NOT SCALE PRINTS.

Texas Department of Transportation
125 E. 11th Street
Austin, Texas 78701-2483
(512) 416-3048
Copyright © 2005 Texas Department of Transportation

STATE OF TEXAS
CARL OWEN NIX
93674
LICENSED PROFESSIONAL ENGINEER

SOUTH TRAVIS AREA ENGINEER AND MAINTENANCE FACILITY
AUSTIN, TRAVIS COUNTY
AUSTIN DISTRICT 14

Revisions

Drawn by:
CARL O. NIX, P.E.
Project No.
470400238
Date
03.23.2005
Sheet No.

P2.2
of X sheets

CADFILE: T:\MNTFRM\D14AUS\470400238\Acad\MEP\P2_1_TO_P3_2.dwg Plotted: Wed, Mar. 23, 2005 @ 1:16 PM By: CNIX

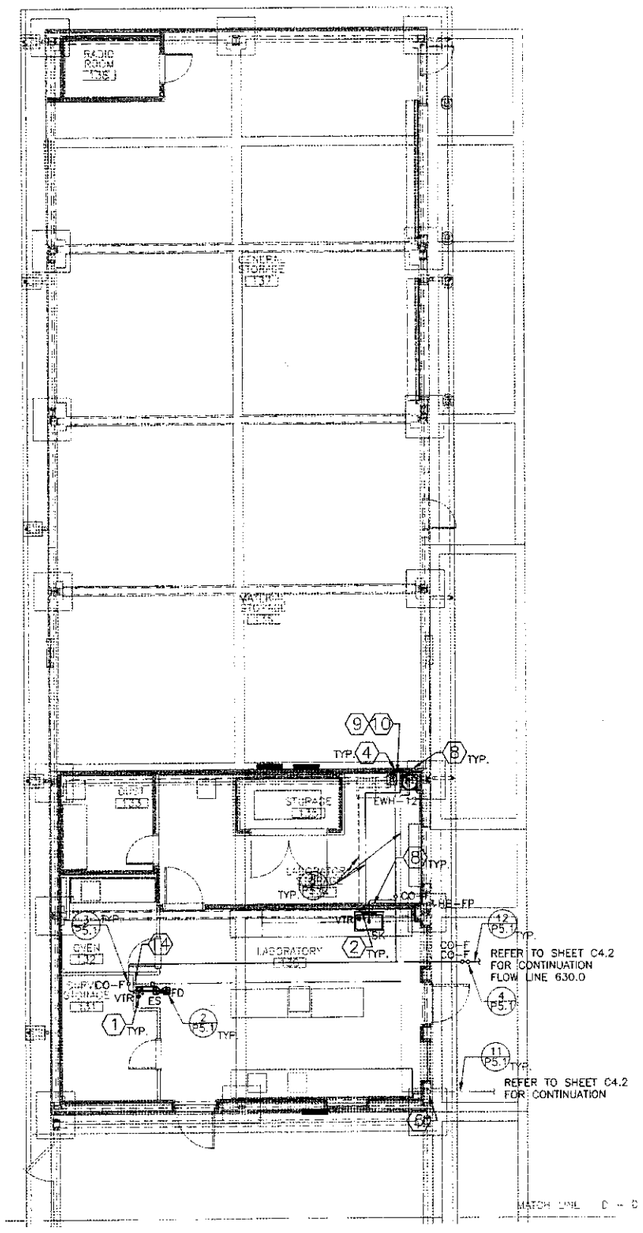

NORTH

1 FLOOR PLAN KEY PLAN BLDG#2
SCALE: 1/8" = 1'-0"

0' 2' 4' 8' 16'

SEE P2.1 FOR GENERAL AND KEYED NOTES

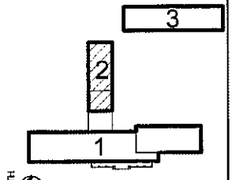

NORTH KEY PLAN

PLUMBING PLAN-BLDG.#2

NOTE: THIS DRAWING WAS CREATED FOR PRODUCTION ON 22" x 34" SHEET SIZE. DO NOT SCALE PRINTS.

Texas Department of Transportation
125 E. 11th Street
Austin, Texas 78701-2483
(512) 416-3048
Copyright © 2005 Texas Department of Transportation

STATE OF TEXAS
CARL OWEN NIX
93674
LICENSED PROFESSIONAL ENGINEER
3/23/05

SOUTH TRAVIS AREA ENGINEER AND MAINTENANCE FACILITY
AUSTIN, TRAVIS COUNTY
AUSTIN DISTRICT 14

Revisions
△
△
△
△

Drawn by:
CARL O. NIX, P.E.
Project No.
470400238
Date
03.23.2005
Sheet No.

P2.3
of X sheets

CADFILE: T:\MNTFN\D14\US\470400238\Acad\MEP\P2_1_TO_P3_2.dwg Plotted: Wed, Mar. 23, 2005 @ 1:16 PM By: CNIX

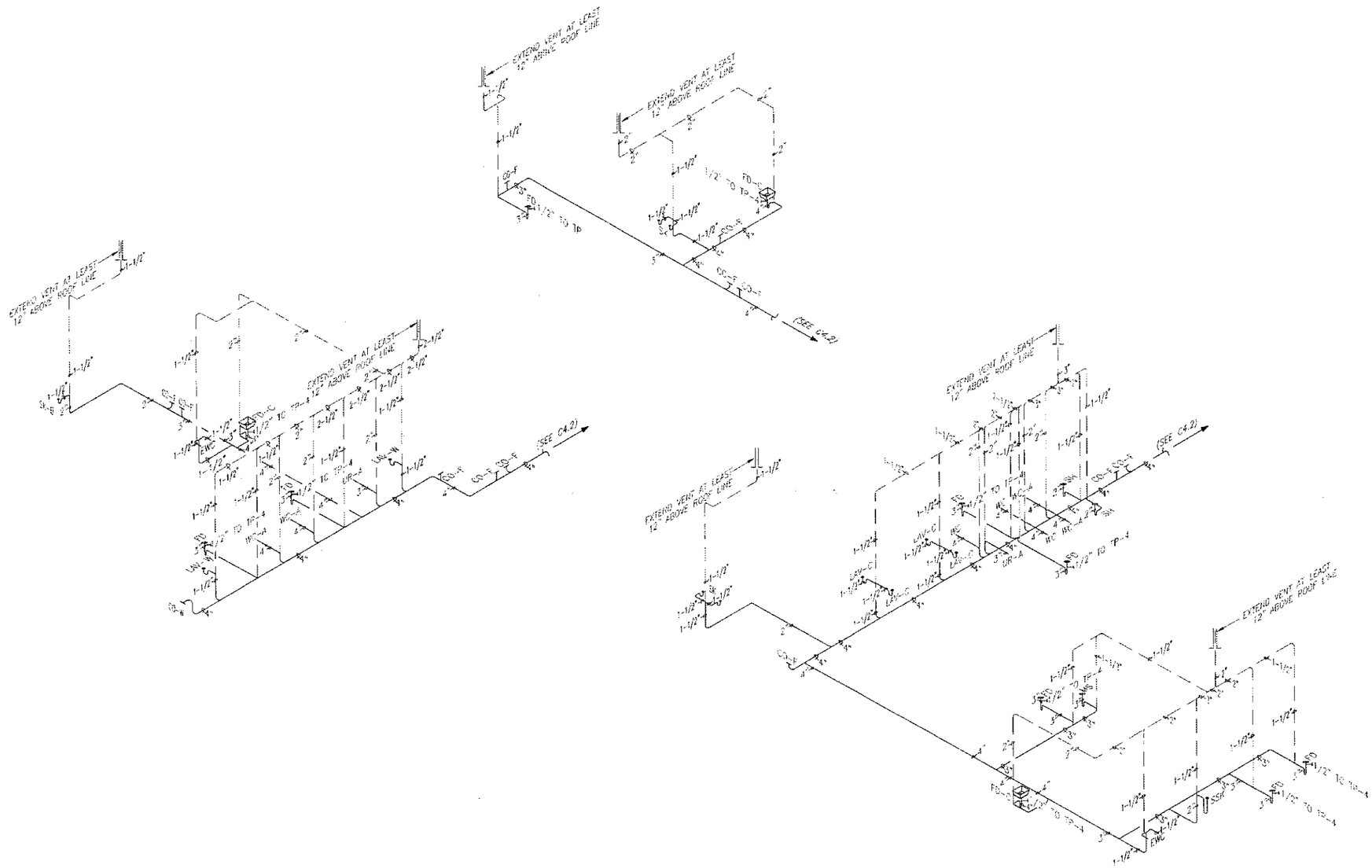

1 SANITARY RISER DIAGRAM
SCALE: NOT TO SCALE

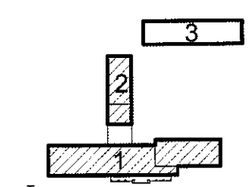

KEY PLAN

PLUMBING RISER DIAGRAMS

NOTE: THIS DRAWING WAS CREATED FOR PRODUCTION ON 22" x 34" SHEET SIZE. DO NOT SCALE PRINTS.

CADFILE: T:\MNTTM\D14\US\470400238\Acad\MEP\P2_1_TO_P3_2.dwg Plotted: Wed, Mar. 23, 2005 @ 12:57 PM By: CNIX

Texas Department of Transportation
125 E. 11th Street
Austin, Texas 78701-2483
(512) 416-3046
Copyright © 2005 Texas Department of Transportation

STATE OF TEXAS
CARL OWEN NIX
93674
LICENSED PROFESSIONAL ENGINEER
3/23/05

SOUTH TRAVIS AREA ENGINEER AND MAINTENANCE FACILITY
AUSTIN, TRAVIS COUNTY
AUSTIN DISTRICT 14

Revisions

Drawn by:
CARL O. NIX, P.E.
Project No.
470400238
Date
03.23.2005
Sheet No.

P3.1
of X sheets

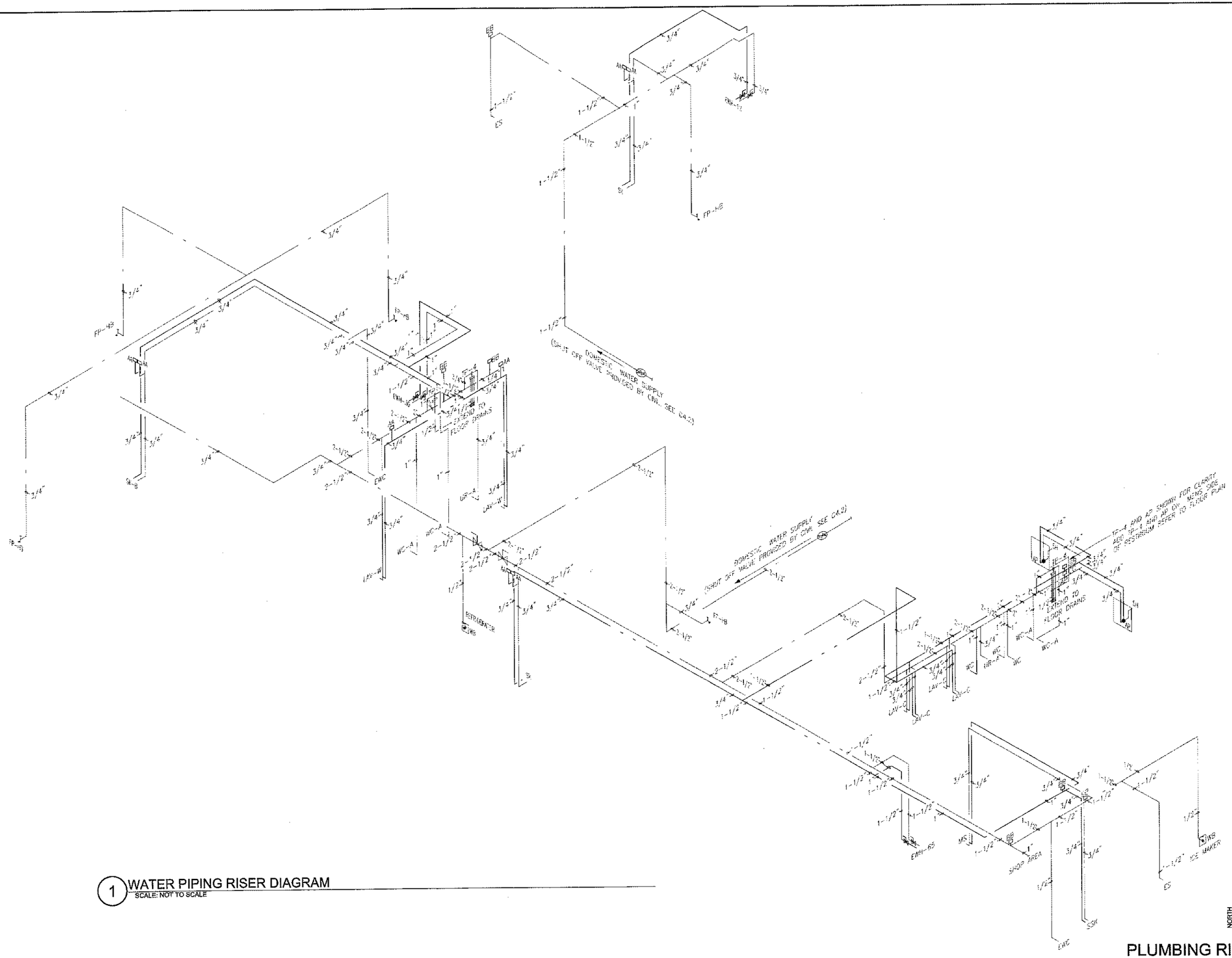

1 WATER PIPING RISER DIAGRAM
SCALE: NOT TO SCALE

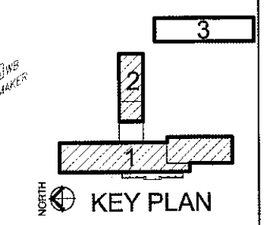

KEY PLAN

PLUMBING RISER DIAGRAMS

NOTE: THIS DRAWING WAS CREATED FOR PRODUCTION ON 22" x 34" SHEET SIZE. DO NOT SCALE PRINTS.

Texas Department of Transportation
125 E. 11th Street
Austin, Texas 78701-2483
(512) 416-3048
Copyright © 2005 Texas Department of Transportation

STATE OF TEXAS
CARL OWEN NIX
93874
LICENSED
PROFESSIONAL ENGINEER
3/10/05

SOUTH TRAVIS AREA ENGINEER AND MAINTENANCE FACILITY
AUSTIN, TRAVIS COUNTY
AUSTIN DISTRICT 14

Revisions

Drawn by:
CARL O. NIX, P.E.
Project No.
470400238
Date
03.23.2005
Sheet No.
P3.2
of X sheets

CADFILE: T:\MNTFMNO14\US\470400238\acad\MEP\P2_1_TO_P3_2.dwg Plotted: Wed, Mar. 23, 2005 @ 12:57 PM By: CNIX

PLUMBING FIXTURE SCHEDULE

EQUIPMENT CONNECTIONS LISTED BELOW: SYMBOL	COLD	HOT	WASTE	VENT	MANUFACTURER MODEL# WITH DESCRIPTION
AA	3/4"	3/4"	N/A	N/A	WADE MODEL#5 SHOKSTOP WITH A FIXTURE UNIT CAPACITY RANGE 1-11, ALL STAINLESS STEEL CONSTRUCTION WITH WELDED NESTED BELLOWS. LOCATE ABOVE REMOVABLE TILE DROP CEILING OR ACCESSIBLE FROM ACCESS DOOR AS INDICATED ON RISER DIAGRAM.
BB	1"	1"	N/A	N/A	WADE MODEL#10 SHOKSTOP WITH A FIXTURE UNIT CAPACITY RANGE 12-32, ALL STAINLESS STEEL CONSTRUCTION WITH WELDED NESTED BELLOWS. LOCATE ABOVE REMOVABLE TILE DROP CEILING OR ACCESSIBLE FROM ACCESS DOOR AS INDICATED ON RISER DIAGRAM.
CC	1"	1"	N/A	N/A	WADE MODEL#20 SHOKSTOP WITH A FIXTURE UNIT CAPACITY RANGE 33-60, ALL STAINLESS STEEL CONSTRUCTION WITH WELDED NESTED BELLOWS. LOCATE ABOVE REMOVABLE TILE DROP CEILING OR ACCESSIBLE FROM ACCESS DOOR AS INDICATED ON RISER DIAGRAM.
CO-F	N/A	N/A	4"	N/A	WADE MODEL#6004TY.1.118 CAST IRON CLEANOUT W/ VANDAL PROOF NICKEL BRONZE SCORIATED TOP. BRONZE GASKET PLUG, FOR TY-SEAL INSTALLATION. WHEN INSTALLED OUTSIDE CLEANOUT SHALL BE ENCASED IN 3" THICK CONCRETE PAD 12" X 12" DIMENSION, WITH CAST IRON TOP. PROVIDE APPROPRATE TOP TO MATCH ARCHITECTURAL FLOOR FINISH SCHEDULE.
CO-W	N/A	N/A	4"	N/A	WADE MODEL#8554.F CAST IRON CLEANOUT FERRULE WITH SPIGOT OUTLET AND THREADED BRASS COUNTERSUNK BRASS PLUG INCLUDING WADE MODEL#8480R8 ROUND STAINLESS STEEL ACCESS COVER.
ES	1-1/4"	N/A	1-1/4"	N/A	BRADLEY MODEL#S19-310BF COMBINATION DRENCH SHOWER AND EYE/FACE WASH UNIT WITH FACE SPRAY RING BARRIER FREE MODEL. UNIT SHALL HAVE A 10ø" YELLOW IMPACT-RESISTANT PLASTIC SHOWER HEAD, SPRAYHEAD ASSEMBLY WITH TWIN EYE WASH HEADS WITH PROTECTIVE COVERS, 10ø" STAINLESS STEEL BOWL, CHROME PLATED FACE SPRAY RING WITH HAND AND FOOT OPERATED STAY OPEN CHROME PLATED BRASS BALL VALVES WITH PRESSURE COMPENSATING DEVICES. ALL PIPE AND FITTINGS SHALL BE GALVANIZED STEEL COATED WITH SAFETY YELLOW. PIPE DRAIN OUTLET TOWARD FLOOR DRAIN.
EWC	3/8"	N/A	1-1/2"	N/A	ELKAY MODEL#LZSTL8 WITH LKAPREZL APRON, SELF CONTAINED WALL HUNG ELECTRIC REFRIGERATED WATER COOLER TWO-LEVEL MODEL. 3.7 FULL LOAD AMPS, 325 WATTS. INSTALL TO MEET ADA REQUIREMENTS WITH BUBBLER OUTLET AT 34" ABOVE FINISHED FLOOR. PROVIDE AND INSTALL TRAP.
FD	N/A	N/A	3"	N/A	WADE MODEL#1103.TY.STD5.1-27 CAST IRON FLOOR DRAIN WITH INTEGRAL CLAMPING COLLAR. 5ø" ADJUSTABLE NICKEL BRONZE STRAINER. TRAP PRIMER AND SEDIMENT BUCKET. PROVIDE AND INSTALL TRAP.
FD-C	N/A	N/A	4"	N/A	WADE MODEL#2374.TY.26 CAST IRON DEEP SUMP FLOOR DRAIN WITH SQUARE TOP AND LOOSE SET DUCTILE IRON GRATE. PROVIDE AND INSTALL TRAP.
HB-FP	3/4"	N/A	N/A	N/A	WATTS MODEL#FHB-2-4, FROST-PROOF DRAINING WALL HYDRANT 3/4" INLET WITH VACUUM BREAKER. 3/4" HOSE THREAD OUTLET. SPECIFIED WALL THICKNESS IS 4 INCHES. INSTALL 24" A.F.F.
HB	3/4"	N/A	N/A	N/A	WATTS MODEL#SC8-4, 3/4" FEMALE NPT INLET CAST BRASS HOSE BIBB, WITH VACUUM BREAKER. INSTALL 24" A.F.F.
LAV-C	1/2"	1/2"	1-1/4"	N/A	AMERICAN STANDARD MODEL#0475.020, "AQUALYN" 20-3/8" X 17-3/8" WHITE, VITREOUS CHINA, SELF RIMMING, OVAL, COUNTER TOP LAVATORY. CHICAGO FAUCETS #404CP LAVATORY FAUCET INCLUDES MODEL#E12 AERATOR AND MODEL#390 ADA-COMPLIANT CURVED LEVER HANDLES AND OFFSET LAVATORY STRAINER. SUPPLY AND INSTALL WITH STOPS AND BRAIDED STAINLESS STEEL RISER HOSES.
LAV-W	1/2"	1/2"	1-1/4"	N/A	AMERICAN STANDARD MODEL#0356.015, "LUCERNE" 20-1/2" X 18-1/4" WHITE VITREOUS CHINA WALL HUNG LAVATORY. CHICAGO FAUCETS #404CP LAVATORY FAUCET INCLUDES MODEL#E12 AERATOR AND MODEL#390 ADA-COMPLIANT CURVED LEVER HANDLES AND OFFSET LAVATORY STRAINER. SUPPLY AND INSTALL WITH STOPS AND BRAIDED STAINLESS STEEL RISER HOSES. INSTALL ON EXTENDED-ARM, IN-WALL CARRIER BY WADE, ZURN, OR APPROVED EQUAL.
MS	3/4"	3/4"	3"	N/A	ACORN MODEL#TNC-24-BDS-CRS-OC-SH-SSC-TF2-KH36-KMH-KF-KWG-2-24" PRECAST TERRAZZO-WARE NEO-CORNER MOP SINK WITH STAINLESS STEEL WALL GAURDS, 36" HOSE AND MOP HANGER, ALL EXPOSED SURFACES SHALL BE FREE FROM PITS AND IMPERFECTIONS WITH A SEALED SURFACE. INTEGRAL DRAIN SHALL HAVE A STAINLESS STEEL STRAINER AND PROVIDE FOR AN INSIDE CAULKED CONNECTION TO A 3" PIPE WITH TRAP TO BE INSTALLED PER MANUFACTURER'S RECOMMENDATION. CHICAGO FAUCETS #897-RCF-369 ROUGH CHROME FINISH ADJUSTABLE SERVICE SINK FAUCET, PAIL HOOK WITH WALL SUPPORT, VACUUM BREAKER SPOUT, 3/4" HOSE THREAD OUTLET INTEGRAL STOP ARMS. MOUNT ON WALL 36" A.F.F.
SH	1/2"	1/2"	2"	N/A	CLARION BATHWARE MODEL#3837BF. BARRIER-FREE WHITE SHOWER CONSTRUCTED FROM FIBERGLASS. REINFORCED GELCOAT CONSTRUCTION AND TEXTURED FLOOR, 38"LX38"WX78.25"H WITH 2" THRESHOLD COMPLETE WITH GRAB BARS#503016TS, SHOWER SEAT#400,N/L-LH-30". SHOWER CURTAIN ROD#IN-36 AND FLOOR DRAIN. INSTALL CHICAGO FAUCETS MIXING VALVE MODEL# 2500-VOCCP, HOSE/HEAD/SLIDE BAR CHICAGO FAUCETS MODEL#153CR20035, VACUUM BREAKER/WALL SPOUT CHICAGO FAUCETS MODEL#778-9KJKCP. WHICH INCLUDES THE FOLLOWING: A TEMPSHIELD MIXING VALVE CAPABLE OF THERMOSTATIC & PRESSURE BALANCING INCLUDING INTEGRAL CHECK STOPS WITH A HAND HELD SHOWER USING A 69" METAL CLAD HOSE WITH 51" SLIDE BAR AND WALL SPOUT WITH VACUUM BREAKER. THE CONTROLS SHALL BE MOUNTED ON THE OPPOSITE WALL OF THE SEAT. INSTALL IN ACCORDANCE TO ADA REQUIREMENTS AND SHOWER MANUFACTURER RECOMMENDATIONS.
SK	1/2"	1/2"	1-1/2"	N/A	JUST MANUFACTURING, MODEL#DL-ADA-1933-A-GR, 18 GAUGE STAINLESS DOUBLE BOWL KITCHEN SINK, DIMENSION 33" X 19" WITH CENTER DRAINS. CHICAGO FAUCETS # 201A-GN8AE3-370CPR SINK FAUCET, WITH BRAIDED STAINLESS STEEL RISER HOSES. CONTRACTOR SHALL PROVIDE AND INSTALL ADA-OFFSET SINK STAINLESS STRAINER.
SK-B	1/2"	1/2"	1-1/2"	N/A	JUST MANUFACTURING, MODEL#SL-ADA-1613-A-GR, 18 GAUGE STAINLESS SINGLE BOWL SINK, DIMENSION 13" X 16" WITH CENTER DRAINS. CHICAGO FAUCETS # 201A-GN8AE3-370CPR SINK FAUCET, WITH BRAIDED STAINLESS STEEL RISER HOSES. CONTRACTOR SHALL PROVIDE AND INSTALL ADA-OFFSET SINK STAINLESS STRAINER.
SSK	3/4"	3/4"	2"	N/A	AMERICAN STANDARD MODEL#7692.008, 22" X 18" ACID RESISTING, WHITE ENAMELED CAST IRON DRILLED BACK WALL HUNG SERVICE SINK, WITH 2" CAST IRON TRAP STANDARD MODEL#7798.020, RIM GUARD MODEL#8379.018, CHICAGO FAUCETS #897-RCF-369 ROUGH CHROME FINISH ADJUSTABLE SERVICE SINK FAUCET, PAIL HOOK WITH WALL SUPPORT, VACUUM BREAKER SPOUT, 3/4" HOSE THREAD OUTLET INTEGRAL STOP ARMS.
TP	1/2"	N/A	N/A	N/A	WADE MODEL#2400S, SINGLE DISTRIBUTION 1/2" TRAP PRIMER VALVE WITH VACUUM BREAKER. 1/2" SWEAT CONNECTIONS. ALL BRONZE BODY, NONLIMING INTERNAL OPERATING ASSEMBLY WITH A GASKETED BRONZE COVER OR APPROVED EQUAL. INSTALL PER MANUFACTURERS RECOMMENDATIONS.
TP-4	1/2"	N/A	N/A	N/A	WADE MODEL#2400MF, SINGLE DISTRIBUTION 1/2" TRAP PRIMER VALVE WITH VACUUM BREAKER INCLUDING OPTIONAL DISTRIBUTION UNIT WITH FOUR 3/8" NPT FEMALE CONNECTIONS. ALL BRONZE BODY, NONLIMING INTERNAL OPERATING ASSEMBLY WITH A GASKETED BRONZE COVER OR APPROVED EQUAL. INSTALL PER MANUFACTURERS RECOMMENDATIONS.
NOT USED	3/4"	N/A	2"	N/A	AMERICAN STANDARD MODEL#6501.010 "WASHBROOK 1.0 GPF, WHITE VITREOUS CHINA SIPHON JET URINAL WITH 3/4" TOP INLET SPUD WITH SLOAN FLUSH VALVE MODEL 186-1. MOUNT URINAL WITH TOP OF RIM AT 24" ABOVE FINISH FLOOR. INSTALL URNINAL ON IN-WALL UNIVERSAL CARRIER WADE MODEL#400 SERIES. INSTALL PER MANUFACTURERS' RECOMMENDATIONS.
UR-A (ADA)	3/4"	N/A	2"	N/A	AMERICAN STANDARD MODEL#6501.010 "WASHBROOK 1.0 GPF, BARRIER FREE WHITE VITREOUS CHINA SIPHON JET URINAL WITH 3/4" TOP INLET SPUD WITH SLOAN FLUSH VALVE MODEL 186-1. MOUNT URINAL WITH TOP OF RIM AT 17" ABOVE FINISH FLOOR. INSTALL URNINAL ON IN-WALL UNIVERSAL CARRIER WADE MODEL#400 SERIES. INSTALL PER MANUFACTURERS' RECOMMENDATIONS.
WB	1/2"	N/A	N/A	N/A	IPS CORPORATION MODEL#82088, RECESSED ICE MAKER BOX WITH FACTORY INSTALLED VALVE 1/2" SWEAT CONNECTION.
WC	1"	N/A	4"	2"	AMERICAN STANDARD MODEL#2257.103, "AFWALL ELONGATED SIPHON JET ACTION FLUSH VALVE TOILET 1.6 GPF, WHITE VITREOUS CHINA WALL HUNG MOUNTED WITH RIM AT 15" A.F.F., 1-1/2" BRASS TOP SPUD. SLOAN ROYAL #111 FLUSH VALVE. VALVE SHALL BE MOUNTED 24" ABOVE RIM OF TOILET BOWL. BENEKE #521HPSS ELONGATED WHITE OPEN FRONT SEAT WITHOUT LID. INSTALL TOILET ON NO-HUB SINGLE AND DOUBLE FIXED OFFSET VERTICAL CARRIER WADE MODEL#371SERIES. INSTALL CARRIER AND TOILET PER MANUFACTURERS' RECOMMENDATIONS.
WC (ADA)	1"	N/A	4"	2"	AMERICAN STANDARD MODEL#2257.103, "AFWALL ELONGATED SIPHON JET ACTION FLUSH VALVE TOILET 1.6 GPF, WHITE VITREOUS CHINA WALL HUNG MOUNTED WITH SEAT HEIGHT SET AT 17-19" A.F.F., 1-1/2" BRASS TOP SPUD. SLOAN ROYAL #111 FLUSH VALVE. VALVE SHALL BE MOUNTED 24" ABOVE RIM OF TOILET BOWL. FLUSH VALVE HANDLE SHALL BE LOCATED ON WIDE SIDE OF STALL. BENEKE #521HPSS ELONGATED WHITE OPEN FRONT SEAT WITH LID. INSTALL TOILET ON NO-HUB SINGLE AND DOUBLE FIXED OFFSET VERTICAL CARRIER WADE MODEL#371SERIES. INSTALL CARRIER AND TOILET PER MANUFACTURERS' RECOMMENDATIONS.

AIR COMPRESSOR SCHEDULE

MARK	MANUFACTURER, MODEL/SIZE	TANK SIZE (GALLONS)	TANK CONFIGURATION	MAX. HP	CAPACITY (CFM) @175 PSI	RPM	OUTLET SIZE	VOLT/HZ/PH	No. STAGES	MAX. PSI RATING	RATED FLOW SCFM	FILTRATION RATING (MICRONS)
COMP	MANUFACTURED BY INGERSOLL-RAND MODEL# 2545N7.5FP	80	VERTICAL	7.5	27.0	825	3/4" NPT	208/60/3	2	175	N/A	N/A
REG/GAUGE	MANUFACTURED BY INGERSOLL-RAND MODEL# R27241-600, WITH GUAGE	N/A	N/A	N/A	N/A	N/A	1/2" NPT	N/A	N/A	200	150	N/A
SEP	MANUFACTURED BY INGERSOLL-RAND MODEL# PS-060	1	N/A	15	N/A	N/A	3/4" NPT	N/A	N/A	N/A	60	N/A
P-FILTER	MANUFACTURED BY INGERSOLL-RAND MODEL# GP-123	N/A	N/A	N/A	N/A	N/A	3/4" NPT	N/A	N/A	N/A	123@100 PSI	1
A-FILTER	MANUFACTURED BY INGERSOLL-RAND MODEL# HE-123	N/A	N/A	N/A	N/A	N/A	3/4" NPT	N/A	N/A	N/A	123@100 PSI	0.01

REMARKS:

1. BOND COPPER COMPRESSED AIR PIPING WITH No. 8 AMERICAN WIRE GAUGE WITH COPPER PIPE CLAMPS TO NEAREST ABOVE SLAB DOMESTIC WATER PIPING.
2. AIR COMPRESSOR SHALL INCLUDE A FACTORY MOUNTED MOTOR STARTER, ADJUSTABLE PRESSURE SWITCH, CENTRIFUGAL UNLOADER AND AUTOMATIC RECIEVER TANK DRAIN.
3. AIR COMPPRESSOR PUMP SHALL BE 100% CAST IRON RATED FOR 15,000 HOURS.
4. START UP KIT SHALL BE INSTALLED AND PROVIDED WITH GIVING THE CAPABILITY OF MAINTENANCE FOR ONE YEAR.
5. AIR COMPRESSOR SHALL HAVE A TWO YEAR PUMP WARRANTY AND FIVE YEAR RECIEVER TANK WARRANTY.
6. AUTO DRAIN RECIEVER TANK DRAIN VALVE AND AUTO DRAIN COMPRESSED AIR FILTERS SHALL DRAIN TO OIL/WATER SEPARATOR.
7. RIGID MOUNT OIL/WATER SEPARATOR ON GALVANIZED METAL CHAIR. OIL/WATER SEPARATOR DRAIN SHALL BE 18 INCHES ABOVE FINISHED FLOOR.
8. COMPRESSED AIR PIPING SHALL BE 3/4" TYPE "K" COPPER.
9. PROVIDE ONE SPARE REPLACLEABLE FILTER ELEMENT WITH EACH COMPRESSED AIR FILTER.

ELECTRIC HOT WATER HEATER SCHEDULE

MARK	MANUFACTURER, MODEL/SIZE	GALLON CAPACITY	GPH RECOVERY @90° RISE	ELEMENT WATTAGE	FULL LOAD AMPERAGE	VOLT/HZ/PH	JACKET DIAMETER	TOTAL HEIGHT
EWH-65	MANUFACTURED BY AMERICAN MODEL#E62-65H-045DV INCLUDES METAL CHAIR MANUFACTURED BY WATTS, MODEL#AS-26	66	20.7	4,500	21.6	208/60/1	22"	59.25"
EWH-30	MANUFACTURED BY AMERICAN MODEL#E62-30H-045DV INCLUDES METAL CHAIR MANUFACTURED BY WATTS, MODEL#AS-20	30	20.7	4,500	21.6	208/60/1	16"	46"
EWH-12	MANUFACTURED BY AMERICAN MODEL#E61-12U-015SV INCLUDES METAL CHAIR MANUFACTURED BY WATTS, MODEL#AS-20	12	6.9	1,500	7.2	208/60/1	16"	22.75"

REMARKS:

1. WATER HEATERS SHALL BE UL 174 LISTED AND MEET OR EXCEED ASHRAE 90.1-2001.
2. ROUTE T&P RELIEF VALVE PIPING AS INDICATED IN PLANS.
3. PROVIDE AND INSTALL WATER HEATER DRAIN PAN. ROUTE DRAIN PIPING FOR DRAIN PAN AS INDICATED IN PLANS.
4. ALL DRAINS SHALL BE SHALL BE HARDDRAWN TYPE "K" COPPER.
5. PROVIDE AND INSTALL DRAIN PAN WITH DRAIN AND WATER HEATER GALVANIZED METAL CHAIR FOR EACH WATER HEATER, UNLESS NOTED OTHERWISE.
6. ALL HOT WATER HEATERS SHALL COME WITH A 6 YEAR LIMITED TANK AND PARTS WARRANTY.
7. INSTALL DIELECTRIC UNIONS AND HEAT TRAP CHECK VALVES ON HOT AND COLD WATER HOT WATER HEATER CONNECTIONS.
8. BOND HOT AND COLD WATER PIPING WITH No. 8 AMERICAN WIRE GAUGE WITH COPPER PIPE CLAMPS TO MAINTAIN GROUNDING ON HOT WATER PIPING.
9. EACH ELECTRIC HOT WATER HEATER SHALL INCLUDE THE FOLLOWING: INTERNAL ANODE ROD, COLD WATER DIP TUBE WITH TOP WATER CONNECTIONS, BUILT IN ELECTRIC JUNCTION BOX READY FOR 3/4" CONDUIT CONNECTION.

ACCESS DOORS

MARK	MANUFACTURER, MODEL/SIZE	DOOR SIZE (INCHES)	DOOR RELEASE MECHANISM	CONSTRUCTION MATERIAL	DOOR PANEL AND FRAME GAGE no.	MOUNTING HEIGHT BOTTOM OF PANEL TO FLOOR
AP	MANUFACTURED BY MILCOR MODEL#MS-24X24	24X24	SCREW DRIVER CAM-LATCH	STAINLESS STEEL	16	48 INCHES

PLUMBING SCHEDULES

Texas Department of Transportation
125 E. 11th Street
Austin, Texas 78701-2483
(512) 416-3048
Copyright © 2005 Texas Department of Transportation

STATE OF TEXAS — CARL OWEN NIX — 93674 — LICENSED PROFESSIONAL ENGINEER

SOUTH TRAVIS AREA ENGINEER AND MAINTENANCE FACILITY
AUSTIN, TRAVIS COUNTY
AUSTIN DISTRICT 14

Revisions

Drawn by:
CARL O. NIX, P.E.
Project No.
470400238
Date
03.23.2005
Sheet No.

P4.1
of X sheets

NOTE: THIS DRAWING WAS CREATED FOR PRODUCTION ON 22" x 34" SHEET SIZE. DO NOT SCALE PRINTS.

CADFILE: T:\MNTFMD14AUS\470400238\Acad\MEP\P4_1.dwg Plotted: Wed. Mar. 23, 2005 @ 12:55 PM By: CNIX

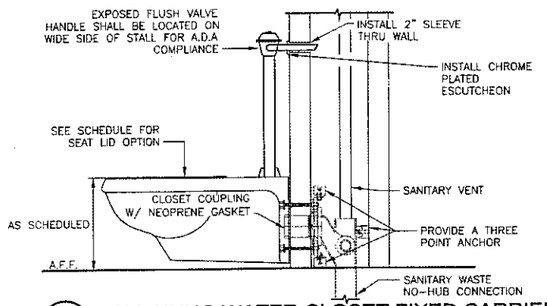

1 WALL HUNG WATER CLOSET FIXED CARRIER
SCALE: NOT TO SCALE

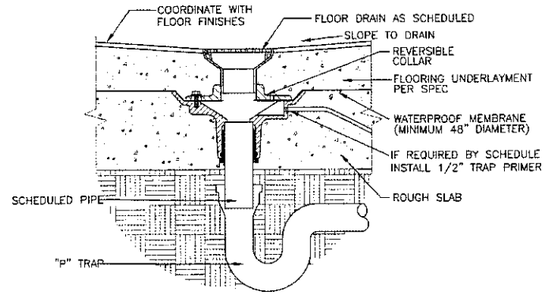

2 FLOOR DRAIN WITH TRAP PRIMER
SCALE: NOT TO SCALE

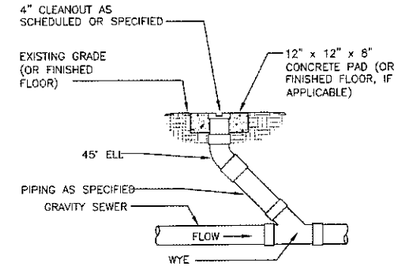

3 ONE WAY CLEANOUT
SCALE: NOT TO SCALE

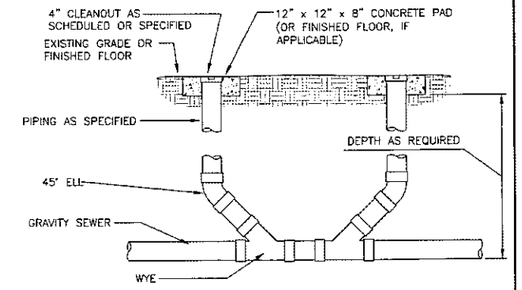

4 TWO WAY CLEANOUT
SCALE: NOT TO SCALE

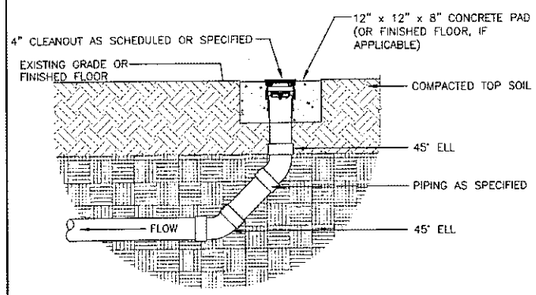

5 END OF LINE CLEANOUT
SCALE: NOT TO SCALE

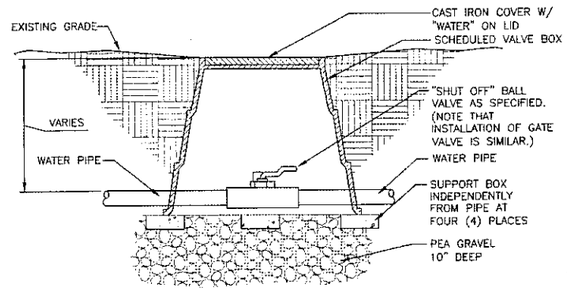

6 BALL VALVE IN VALVE BOX IN SOIL
SCALE: NOT TO SCALE

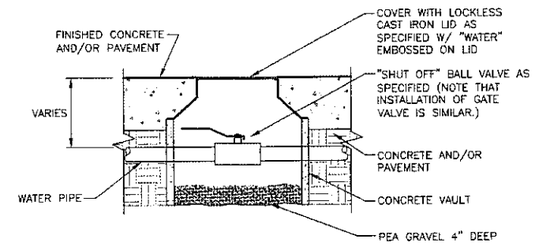

7 BALL VALVE IN VALVE BOX IN CONCRETE
SCALE: NOT TO SCALE

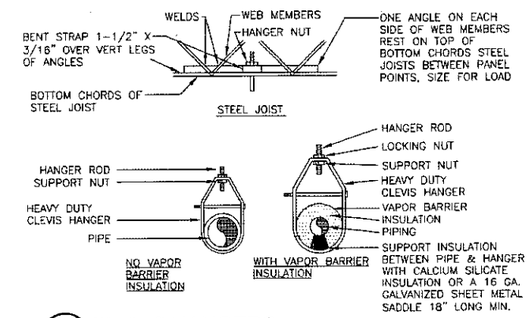

8 CLEVIS HANGERS
SCALE: NOT TO SCALE

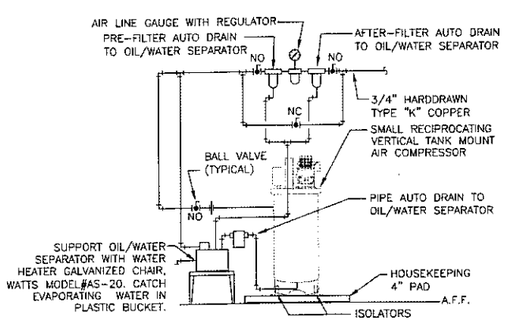

9 COMPRESSED AIR SYSTEM
SCALE: NOT TO SCALE

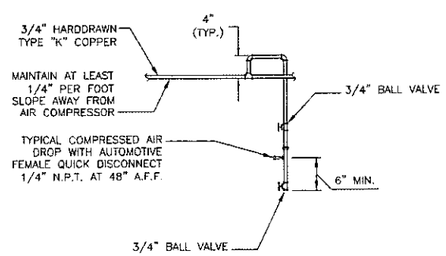

10 AIR DROP WITH QUICK DISCONNECT
SCALE: NOT TO SCALE

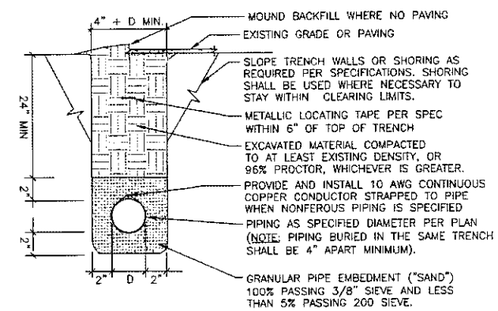

11 WATER PIPING TRENCH
SCALE: NOT TO SCALE

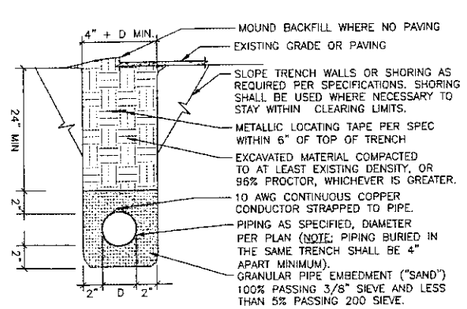

12 SEWER PIPING TRENCH
SCALE: NOT TO SCALE

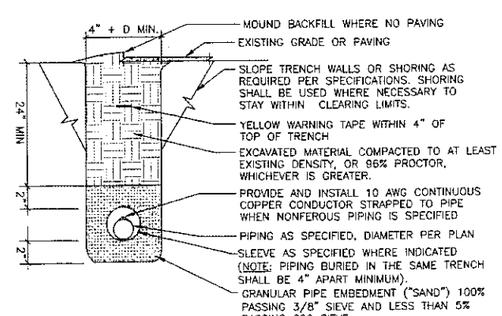

13 GAS PIPING TRENCH
SCALE: NOT TO SCALE

PLUMBING DETAILS

NOTE: THIS DRAWING WAS CREATED FOR PRODUCTION ON 22" x 34" SHEET SIZE. DO NOT SCALE PRINTS.

Texas Department of Transportation
125 E. 11th Street
Austin, Texas 78701-2483
(512) 416-3048
Copyright © 2005 Texas Department of Transportation

STATE OF TEXAS
CARL OWEN NIX
93674
LICENSED PROFESSIONAL ENGINEER
2/23/05

SOUTH TRAVIS AREA ENGINEER AND MAINTENANCE FACILITY
AUSTIN, TRAVIS COUNTY
AUSTIN DISTRICT 14

Revisions
1
2
3
4

Drawn by:
CARL O. NIX, P.E.
Project No.
470400238
Date
03.23.2005
Sheet No.
P5.1
of X sheets

CADFILE: T:\MNTFM\D14AUS\470400238\Acad\MEP\P5_1.dwg Plotted: Wed, Mar. 23, 2005 @ 12:54 PM By: CNIX

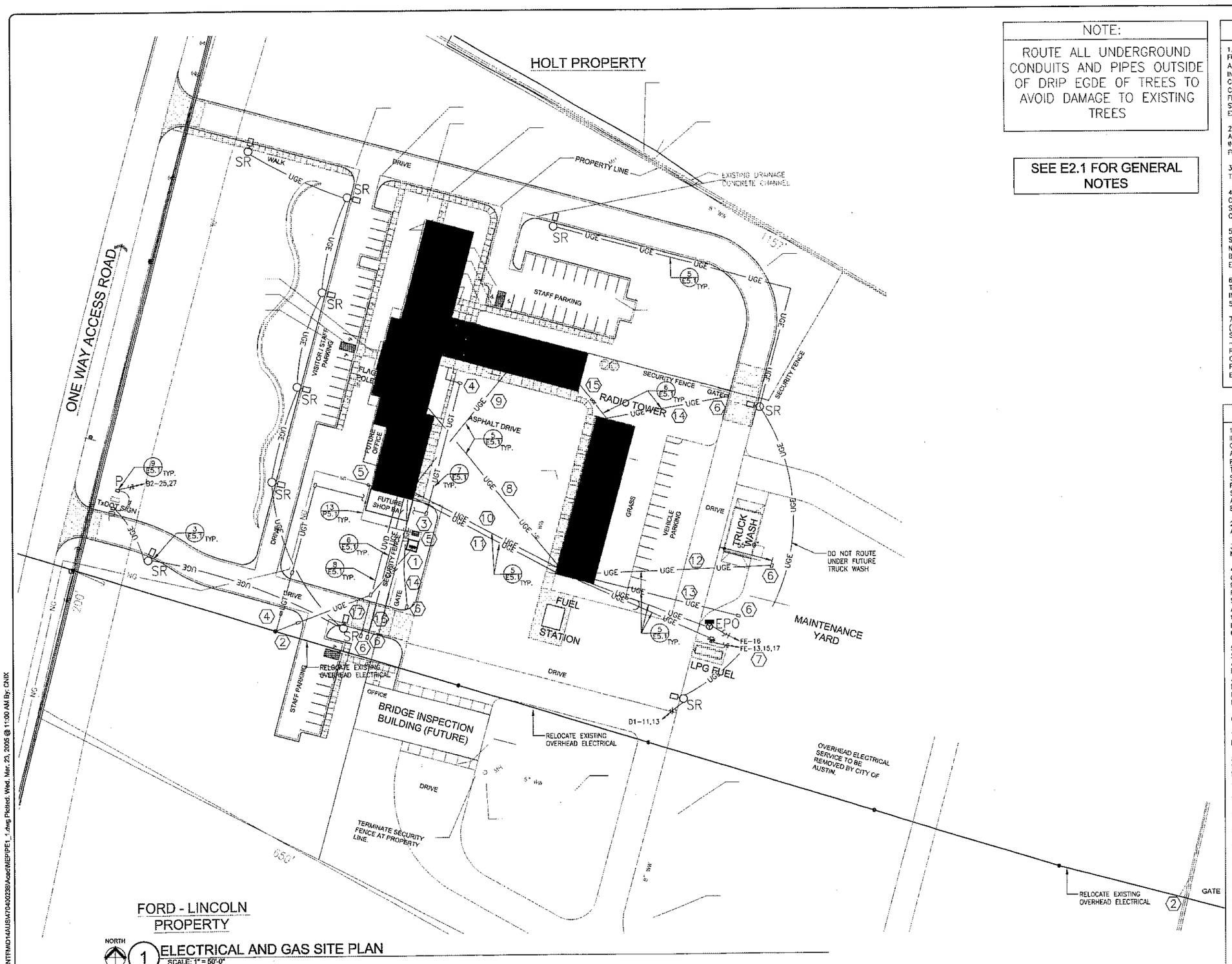

1 ELECTRICAL AND GAS SITE PLAN
SCALE: 1" = 50'-0"

NOTE:

ROUTE ALL UNDERGROUND CONDUITS AND PIPES OUTSIDE OF DRIP EGDE OF TREES TO AVOID DAMAGE TO EXISTING TREES

SEE E2.1 FOR GENERAL NOTES

LPG GENERAL NOTES

1. ALL BRANCH CIRCUIT WIRING FROM PANEL 'FE' TO THE LPG FUEL STATION SHALL BE TYPE THHN LPG RESISTANT SOLID WIRE A MINIMUM OF #12 WIRE IN 3/4"C., GASOLINE RESISTANT, AND INSTALLED IN RIGID GALVANIZED STEEL (R.G.S.). ALL BELOW GRADE CONDUIT SHALL BE RIGID NONMETALIC CONDUIT ENCASED IN RED CONCRETE 3" THICK . ALL LONG RADIUS 90° ELBOWS EMERGING FROM THE EARTH OR CONCRETE SHALL BE RIGID GALVANIZED STEEL AND DOUBLE WRAPPED. CONTRACTOR SHALL INSTALL EXPLOSION-PROOF SEALS IN RIGID GALVANIZED STEEL.

2. THE FIRST FITTING ABOVE THE SLAB SHALL BE AN N.E.C. APPROVED EXPLOSION-PROOF SEAL INSTALL AND PROVIDE SEALS IN ALL CONDUITS EMERGING AND LEAVING THE SLAB AT THE LPG FUEL ISLAND AND AT PANEL "FE", PER N.E.C. .

3. CONTRACTOR SHALL GROUND ABOVEGROUND LPG STORAGE TANKS PER N.E.C. SIMILAR TO E5.1/DETAIL#12.

4. WHERE EMERGENCY POWER-OFF SWITCH (EPO) IS REQUIRED TO CONTROL ADDITIONAL CIRCUIT BREAKERS, ALL SHUNT TRIP DEVICES SHALL BE CONNECTED IN PARALLEL UTILIZING THE SAME CONTROL CIRCUIT.

5. MOUNT EPO - EMERGENCY POWER OFF SWITCH TO ACTIVATE SHUNT TRIP CIRCUIT BREAKERS IN PANEL "FE" ON PEDESTAL PER NEC 48" A.F.G. THE SWITCH SHALL BE LOCATED MORE THAN 20 BUT LESS THAN 100FT FROM LPG FUEL DISPENSOR. REFER TO E2.9.1/DETAIL#5 FOR FURTHER REQUIREMENTS.

6. EACH EPO SWITCH SHALL DISCONNECT SIMULTANEOUSLY FROM THE SOURCE OF SUPPLY, ALL CONDUCTORS OF THE CIRCUIT, INCLUDING THE GROUNDED CONDUCTOR PER N.E.C., ARTICLE 514-11(A) "CIRCUIT DISCONNECTS".

7. FURNISH AND INSTALL AN EMERGENCY POWER-OFF SWITCHES (EPO) WITH A MAINTAINED "MUSHROOM HEAD" PUSH BUTTON - SQUARE D CAT. NO. ZB5AS64, AND AN EMERGENCY STOP LEGEND - SQUARE D CAT. NO. ZBY9330 OR APPROVED EQUAL. MOUNT PUSH BUTTON IN A 4" SQUARE WEATHERPROOF BOX WITH A CLEAR PROTECTIVE COVER. THE EPO SWITCH SHALL DISCONNECT POWER TO THE PROPANE TANK BRANCH CIRCUITS. REFER TO E2.9.1/DETAIL#4 AND #5 FOR FURTHER REQUIRMENTS.

KEYED NOTES - ⬡

1. PAD MOUNTED TRANSFORMER PROVIDED BY UTILITY COMPANY. INSTALL PAD FOR PAD MOUNTED TRANSFORMER PER UTILITY COMPANY REQUIREMENTS. CONTRACTOR SHALL COORDINATE AND ADJUST EQUIPMENT PAD PER AUSTIN ENERGY, CONTACT KEVIN FRASER (512) 505-7665. THE UTILITY COMPANY WILL PROVIDE THE TRANSFORMER AND WIRE TO THE TRANSFORMER. THE CONTRACTOR SHALL PROVIDE THE CONDUIT AND PULL STRING, AND THE REQUIRED EQUIPMENT PAD, TO THE PAD MOUNTED TRANSFORMER. SEE RISER FOR CONDUIT SIZES. CONTRACTOR SHALL PAY ALL ASSOCIATED FEES INCLUDING RELOCATION OF EXISTING OVERHEAD ELECTRICAL ACROSS PROPERTY.

2. AUSTIN ENERGY SHALL RELOCATE EXISTING OVERHEAD POWER ACROSS THE SITE UP TO DIP POLE.

3. ORIENTATION OF GEN SET SHALL BE SUCH THAT AIRFLOW IS NOT RESTRICTED FAN SHALL NOT FACE FENCE.

4. CONTRACTOR SHALL COORDINATE WITH THE TELEPHONE COMPANY, "SOUTHWESTERN BELL", SOUTHWESTERN BELL WILL PROVIDE THE JUNCTION BOX AND WIRE TO THE TELECOMMUNICATION ROOM. THE CONTRACTOR SHALL PROVIDE THE CONDUIT AND PULL STRING TO THE TELECOMMUNICATION ROOM. CONTRACTOR SHALL PAY ALL ASSOCIATED FEES. INSTALL 2 - 4" PVC SCHED. 40. ONE W/200 PAIR VOICE DATA CABLE, SPARE W/2 PULL WIRES STUB UP IN TELECOMMUNICATION ROOM. COORDINATE WITH TELEPHONE COMPANY. REFER TO E2.5 FOR CONTINUATION.

5. CONTRACTOR SHALL COORDINATE WITH AUSTIN TEXAS GAS SERVICE, CONTACT PERSON IS ROBIN HARTMAN 512-465-1134. AUSTIN TEXAS GAS SERVICE SHALL INSTALL AND PROVIDE MAIN EXTENSION AND YARD EXTENSION, INCLUDING SETTING THE METER AT THE BUILDING. CONTRACTOR SHALL MAKE CONNECTECTIONS DOWNSTREAM OF METER. PROVIDE UNDERGROUND NATURAL GAS PIPING TO GEN SET 1-1/2" FROM METER TO GEN SET. TOTAL NATURAL GAS LOAD TO SITE IS 630,000 BTUH.

6. PROVIDE AND INSTALL PULL BOX E5.1/DETAIL#13.

7. PROVIDE AND INSTALL 30/2/NF/3R DISCONNECT AND MOUNTING RACK FOR FUTURE CONNECTION TO PROPANE TANK.

8. 1 - 3/4" C. ROUTE FROM TANK LEVEL MONITOR & LEAK SENSING CONSOLE, IN EQUIPMENT STORAGE BUILDING TO FROM REMOTE ALARM IN OFFICE BUILDING RECEPTION AREA WITH TEST AND RESET BUTTON.

9. 1- 2-1/2" C. FEEDER FROM PANEL MDP TO PANEL C1.

10. 2- 2" C. FEEDER FROM PANEL MDP TO PANEL D1.

11. 1- 1-1/4" C. FEEDER FROM PANEL EDP TO PANEL FE.

12. 1- 2" C. FROM PANEL D1 TO FUTURE WASH BAY.

13. 1- 3" C. FROM PANEL D1 TO FUTURE ASPHALT TANK.

14. 2-1"C W/ PULL STRINGS ROUTE TO GATE FOR FUTURE GATE OPERATOR.

15. FROM EQUIPMENT STORAGE TO RADIO ROOM FOR TANK LEVEL MONITOR & LEAK SENSING CONSOLE COMMUNICATION CAPABILITY 1-1"C.

16. 1- 3" C. FROM PANEL MDP TO FUTURE BRIDGE BLDG.

17. 1- 4" C. VOICE DATA FROM TELECOM ROOM TO FUTURE BRIDGE BLDG.

Texas Department of Transportation
125 E. 11th Street
Austin, Texas 78701-2483
(512) 416-3048

Copyright © 2005 Texas Department of Transportation

STATE OF TEXAS
ROBERT S. RAY
40152
LICENSED PROFESSIONAL ENGINEER
3/23/05

SOUTH TRAVIS AREA ENGINEER AND MAINTENANCE FACILITY
AUSTIN, TRAVIS COUNTY
AUSTIN DISTRICT 14

Revisions

Drawn by:
CARL O. NIX, P.E.
Project No.
470400238
Date
03.23.2005
Sheet No.
E1.1
of X sheets

ELECTRICAL AND GAS SITE PLAN

NOTE: THIS DRAWING WAS CREATED FOR PRODUCTION ON 22" x 34" SHEET SIZE. DO NOT SCALE PRINTS.

CADFILE: T:\ANTF\MD14\US\470400238\Acad\MEP\PE1_1.dwg Plotted: Wed, Mar. 23, 2005 @ 11:00 AM By: CNIX

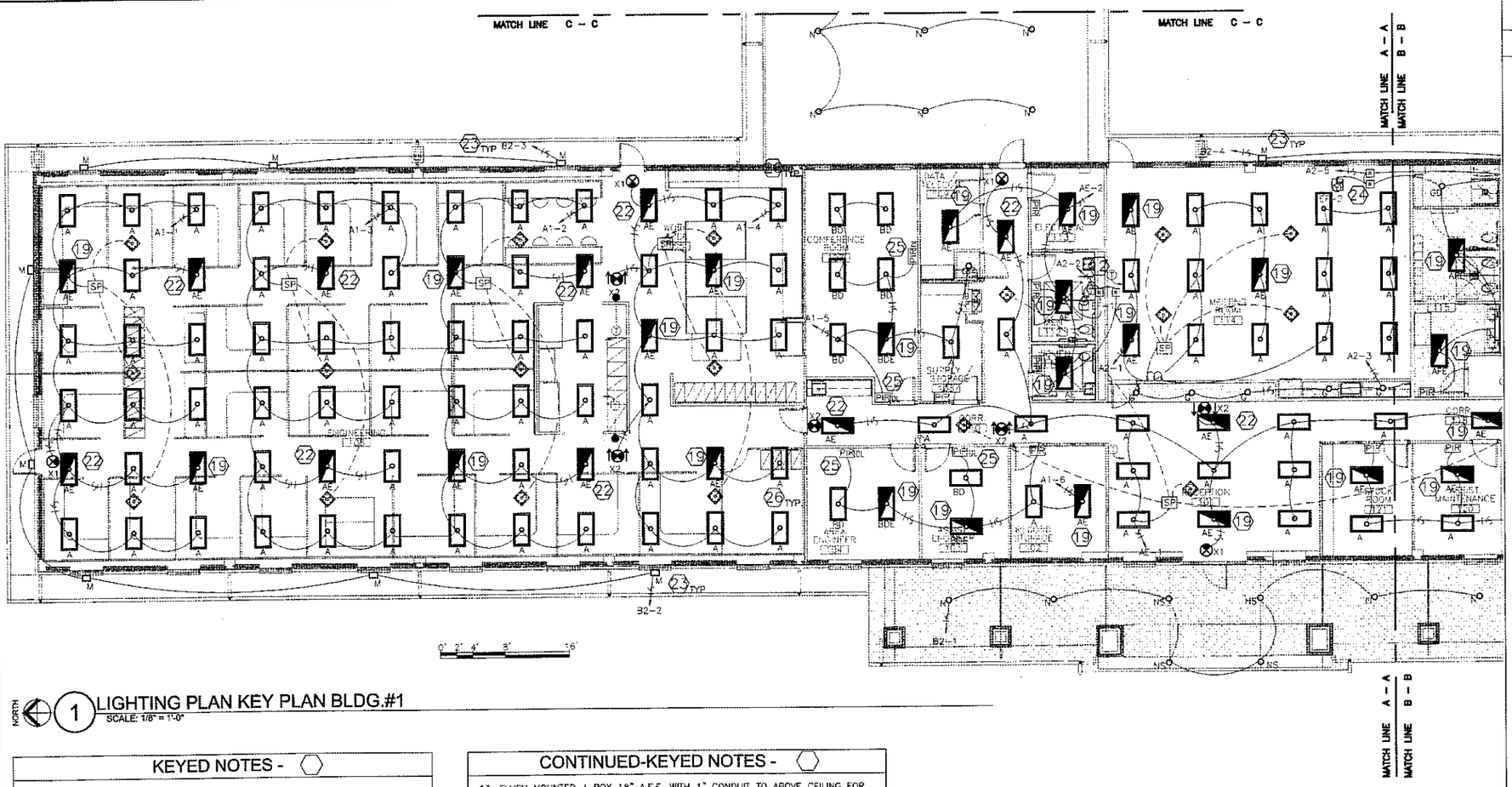

NORTH

1 LIGHTING PLAN KEY PLAN BLDG.#1

SCALE: 1/8" = 1'-0"

KEYED NOTES -

1. 2 – 4" PVC SCHED. 40. ONE W/200 PAIR VOICE DATA CABLE. SPARE W/2 PULL WIRES STUB UP IN TELECOMMUNICATION ROOM. COORDINATE WITH TELEPHONE COMPANY. REFER TO ELECTRICAL SITE PLAN FOR CONTINUATION.

2. CONDUIT SHALL BE COLLARED.

3. PROVIDE AND RIGID MOUNT BACKBOARD, BACKBOARD SHALL BE A FULL SHEET OF PLYWOOD, CDX CONSTRUCTION GRADE AND OR BETTER. INSTALL WITH SMOOTH SIDE EXPOSED, 8FT LENGTH IN THE VERTICAL POSITION, WITH BOTTOM OF PLYWOOD 6" TO 8" A.F.F. BACKBOARD SHALL BE CAPABLE OF SUPPORTING 200 LBS OF DEAD WEIGHT. PRIOR TO BACKBOARD INSTALLATION, CONTRACTOR SHALL PAINT ALL SURFACES WITH FIRE RETARDANT WHITE PAINT. ALL DAMAGED SURFACES AFTER INSTALLATION SHALL BE REPAINTED. EXPOSED SURFACE SHALL BE FREE OF SIGNIFICANT VOIDS, CRACKS, AND BLEMISHES.

4. NEWTON FIG. 3058 GROUND BUS BAR WITH 1 #6 ISOLATED, INSULATED GROUND IN A 3/4" CONDUIT TO BUILDING SERVICE ENTRANCE GROUND.

5. PROVIDE AND INSTALL DATA RACK REFER TO SPECIFICATIONS.

6. PROVIDE AND INSTALL FIBER CANISTERS, NEATLY MOUNT CANISTERS NEAR BOTTOM OF RACK AS CLOSE AS POSSIBLE.

7. PROVIDE AND INSTALL PUNCH BLOCKS AND WIRE MANAGEMENT SPOOLS BENEATH PUNCH BLOCKS. PUNCH BLOCKS SHALL BE COLOR CODED PER SPECIFICATION. MANUFACTURER COLORED PUNCH BLOCKS ARE ACCEPTABLE.

8. STUB OUT 2 – 4" CONDUIT WITH PULL STRING 5FT OUTSIDE BUILDING CAP AND MARK LOCATION FOR FUTURE EXTENSION TO IRRIGATION SYSTEM CONTROLLER. FINAL LOCATION FOR WEATHER PROOF RECEPTACLE AND CONDUITS SHALL BE DETERMINED BY THE LANDSCAPE ARCHITECT.

9. SEE RISER AND SITE PLAN FOR NUMBER OF CONDUITS, WIRES, SIZES AND CONTINUATION

10. EMERGENCY GENERATOR ANNUNCIATOR PANEL. PROVIDE#12 THHN/THWN WIRE IN CONDUIT TO GENERATOR CONTROL PANEL. ADJUST QUANTITY AS REQUIRED FOR PANEL ACTUALLY SUPPLIED. SURFACE MOUNT ON TOP OF AUTOMATIC TRANSFER SWITCH.

11. FLUSH MOUNTED 4" X 4" J-BOX WITH BLANK COVER AND 1 " CONDUIT TO ABOVE CEILING FOR FUTURE SECURITY DEVICE. MOUNT AT 48" AFF. PROVIDE AND INSTALL MATCHING FLUSH RING PER SECURITY DEVICE REFER TO OWNER.

12. INTERLOCK EXHAUST FAN WITH THE MENS AND WOMENS LIGHT SWITCHES WITH ONE RELAY PER LIGHT SWITCH. EXHAUST FAN SHALL RUN IF ANY ONE OF THE LIGHT SWITCH IS IN THE "ON" POSITION.

CONTINUED-KEYED NOTES -

13. FLUSH MOUNTED J-BOX 18" A.F.F. WITH 1" CONDUIT TO ABOVE CEILING FOR RADIO CABLE TO RECEPTION AREA

14. COORDINATE WITH MECHANICAL, MECHANICAL SHALL SUPPLY ALL THERMOSTATS, ELECTRICAL SHALL INSTALL 120V SUPPLY THERMOSTATS FOR THE RADIANT HEATERS .

15. PROVIDE MATCHING PLUG. TURN OVER TO OWNER.

16. CONTRACTOR SHALL INSTALL ALL RECEPTACLES, SWITCHES, AND MOTOR SWITCHES IN EQUIPMENT SHOP FLUSH MOUNTED TO PLYWOOD COORDINATE DISCIPLINES.

17. CONTRACTOR SHALL VERIFY LOCATION OF POWER POLES (PP) WITH OWNER. REFER TO MODULAR FURNITURE WIRE STANDARD SHEET E2.5. INSTALL ONE STANDARD VOICE/DATA OUTLET/PER CUBICLE. VERIFY QUANTITY AND LOCATION OF FURNITURE WITH OWNER.

18. POWER IS PROVIDED TO INDOOR AND OUTDOOR UNIT FROM DISCONNECT. PROVIDE A LUG CONNECTION FOR EACH PIECE OF EQUIPMENT.

19. PROVIDE CONTINUOUS POWER TO BATTERY PACK, SWITCH LIGHT ONLY.

20. COORDINATE LIGHT FIXTURES WITH TRADES. PROVIDE ALL NECESSARY HARDWARE TO SUSPEND LIGHT FIXTURES WITH UNISTRUT. MOUNT BOTTOM OF FIXTURES 8FT A.F.F.

21. COORDINATE LIGHT FIXTURES WITH TRADES. PROVIDE ALL NECESSARY HARDWARE TO SUSPEND LIGHT FIXTURES WITH MOUNTING HARDWARE AS REQUIRED. MOUNT BOTTOM OF FIXTURES 16FT A.F.F.

22. UNSWITCHED NIGHT LIGHT.

23. SEE ARCHITECTURAL EXTERIOR ELEVATIONS FOR MOUNTING HEIGHT OF TYPE "M" FIXTURES.

24. INTERLOCK EXHAUST FAN WITH THE MENS, WOMENS AND JANITORS LIGHT SWITCHES WITH ONE RELAY PER LIGHT SWITCH. EXHAUST FAN SHALL RUN IF ANY ONE OF THE LIGHT SWITCH IS IN THE "ON" POSITION.

25. PASSIVE INFRARED DUAL LEVEL SWITCHING. ONE SWITCH SWITCHES OUTSIDE LAMPS IN EACH FIXTURE. SECOND SWITCH SWITCHES INSIDE LAMPS IN EACH FIXTURE.

26. FIRE CHALK ALL PENETRATIONS IN FIRE WALL. (SEE GENERAL NOTES).

APPLIES TO ALL E-SHEETS

GENERAL NOTES

1. THE LOCATION OF ELECTRICAL ITEMS ON THE ELECTRICAL DRAWINGS ARE DIAGRAMMATIC AND ARE NOT INTENDED TO GIVE COMPLETE AND ACCURATE DETAILS IN REGARD TO LOCATION. EXACT LOCATION SHOULD BE DETERMINED BY ACTUAL MEASUREMENTS AT THE BUILDING, AND WILL IN ALL CASES BE SUBJECT TO THE APPROVAL OF THE ENGINEER. THE ENGINEER RESERVES THE RIGHT TO MAKE ANY REASONABLE CHANGES IN THE LOCATIONS INDICATED WITHOUT ADDITIONAL COST.

2. THE ELECTRICAL DISTRIBUTION SYSTEM SIZING IS BASED ON EQUIPMENT DATA FROM THE SPECIFIED SUPPLIER OR A TYPICAL SUPPLIER. THE CONTRACTOR IS FULLY RESPONSIBLE FOR PROVIDING THE CORRECTLY SIZED ELECTRICAL SYSTEM TO MATCH THE REQUIREMENTS OF THE NEW EQUIPMENT.

3. THE ELECTRICAL SYSTEM SHALL BE GROUNDED IN ACCORDANCE WITH ARTICLE 250 OF THE NATIONAL ELECTRICAL CODE. ALL ELECTRICAL SYSTEMS RECEPTACLES, CABINETS, JUNCTION BOXES, MOTOR FRAMES, MISCELLANEOUS EQUIPMENT, ETC. SHALL BE GROUNDED BY A GREEN-WIRE GROUND CONDUCTOR.

4. UNLESS OTHERWISE NOTED – ALL HOME RUNS SHALL BE 3 EACH #12 THHN/THWN, ¾" C.

5. THE MINIMUM CONDUIT SIZE FOR ELECTRICAL CIRCUITS SHALL BE ¾". THE MINIMUM CONDUIT SIZE FOR VOICE / DATA CIRCUITS SHALL BE 1".

6. ALL DUPLEX/QUAD OUTLETS SHALL BE MOUNTED AS INDICATED ON DRAWING, TO CENTER OF OUTLET. GROUND TERMINAL SHALL POINT DOWN. MOUNT 18" A.F.F. UNLESS OTHERWISE NOTED.

7. WHERE CALLED FOR, USE 2 OR 3 POLE BREAKERS. TYING SINGLE POLE BREAKERS TOGETHER TO CREATE A 2 OR 3 POLE BREAKER IS PROHIBITED.

8. ALL EXTERIOR ILLUMINATION FOR THE BUILDING AND ALL OF THE AREA SITE LIGHTING SHALL BE CONTROLED AS INDICATED ON RISER DIAGRAM.

9. CONTRACTOR IS RESPONSIBLE FOR COORDINATING WITH THE UTILITY COMPANY PRIOR TO BID TO ESTABLISH REQUIREMENTS FOR SERVICE AND TO IDENTIFY MATERIALS AND EQUIPMENT WHICH SHALL BE PROVIDED BY CONTRACTOR AND WHICH SHALL BE PROVIDED BY THE UTILITY COMPANY.

10. THE BIDDER SHALL VISIT THE SITE OF THE PROPOSED WORK AND SHALL FULLY INFORM HIMSELF REGARDING THE FACILITIES. NO ADDITIONAL COMPENSATION WILL BE ALLOWED FOR WORK OR MATERIALS OMITTED FROM BIDDER'S CONTRACT PROPOSAL DUE TO HIS FAILURE TO INFORM HIMSELF BY SUCH INVESTIGATION.

11. THE ELECTRICAL CONTRACTOR SHALL GUARANTEE AGAINST DEFECTS IN ANY OR ALL MATERIALS, EQUIPMENT, OR WORKMANSHIP COVERED BY THE ELECTRICAL SPECIFICATIONS, EXCEPT SUCH MATERIALS, EQUIPMENT, OR WORKMANSHIP FURNISHED BY OTHERS AND SHALL MAKE GOOD, REPAIR, OR REPLACE, AT HIS OWN EXPENSE, ANY DEFECTIVE WORK, MATERIAL OR PART WHICH MAY BECOME EVIDENT WITHIN A PERIOD OF ONE YEAR AFTER FINAL ACCEPTANCE OF THE WORK. NECESSARY SERVICE AND ADJUSTMENT DURING THE EARLY STAGES OF OPERATION AFTER OCCUPANCY SHALL BE PROVIDED BY THE CONTRACTOR WITHOUT ADDITIONAL COST TO THE OWNER.

12. ALL ELECTRICAL EQUIPMENT, CONDUIT, HANGERS, ECT. IN MECHANICAL ROOMS AND FENCED OUT AREAS CAN BE EXPOSED. HIDE ALL CONDUIT, HANGERS, EQUIPMENT FROM SIGHT OF THE GENERAL PUBLIC, NO EXCEPTIONS UNLESS PERMITTED BY ENGINEER IN WRITING.

13. NEW TXDOT EQUIPMENT REQUIREMENT;

A. WHERE APPLICABLE, ALL LAMPS USED ON THIS PROJECT SHALL BE OF THE TOXIC CHARACTERISTIC LEACHATE PROCEDURE (TCLP) LOW MERCURY TYPE.

B. WHERE APPLICABLE, ALL LAMPS SCHEDULED FOR REPLACEMENT, EITHER BY DEMOLITION OR MAINTENANCE, SHALL BE HELD AND DISPOSED OF IN ACCORDANCE WITH THE UNIVERSAL WASTE RULE.

14. CONTRACTOR SHALL ALLOW FOR COORDINATION MEASURES AND QUALIFIED TECHNICIAN MAN HOURS FOR LIGHT FIXTURE ALIGNMENT AND ADJUSTMENTS AS NECESSARY UNTIL THE OWNER IS SATISFIED.

15. INDEPENDANTLY SUPPORT ALL LIGHT FIXTURES MOUNTED IN CELING GRID FROM ABOVE BUILDING STRUCTURE AT ALL FOUR CORNERS. ROUND FIXTURES SHALL BE SUPPORTED IN TWO PLACES.

16. SLEEVE ALL WALL PENETRATIONS WITH SLEEVE 2 PIPE SIZES LARGER THAN PENETRATING PIPE. SLEEVE AND PENETRATING PIPE SHALL BE CONSTRUCTED FROM THE SAME MATERIAL. MAINTAIN INSULATION THROUGH SLEEVES.

17. FIRE CHAULK ALL PENETRATIONS WHERE ARCHITECTURAL PLANS CALL FOR FIRE RATED CONSTRUCTION WALLS. STOP INSULATION SHORT OF SLEEVE FILL ANNULAR SPACES WITH FIRE RATED CHAULK.

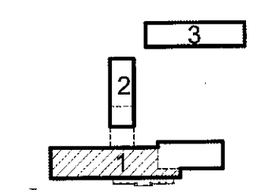

NORTH KEY PLAN

LIGHTING PLAN-BLDG.#1

Texas Department of Transportation
125 E. 11th Street
Austin, Texas 78701-2483
(512) 416-3048
Copyright © 2005 Texas Department of Transportation

STATE OF TEXAS
ROBERT S. RAY
40152
LICENSED PROFESSIONAL ENGINEER
3/23/05

SOUTH TRAVIS AREA ENGINEER AND MAINTENANCE FACILITY

AUSTIN, TRAVIS COUNTY
AUSTIN DISTRICT 14

Revisions

Drawn by:
CARL O. NIX, P.E.
Project No.
470400238
Date
03.23.2005
Sheet No.

E2.1
of X sheets

NOTE: THIS DRAWING WAS CREATED FOR PRODUCTION ON 22" x 34" SHEET SIZE. DO NOT SCALE PRINTS.

CADFILE: T:\INTFMD14\AUS\470400238\Acad\MEP\E2_1 - E2_8.dwg Plotted: Wed, Mar. 23, 2005 @ 10:59 AM By: CNIX

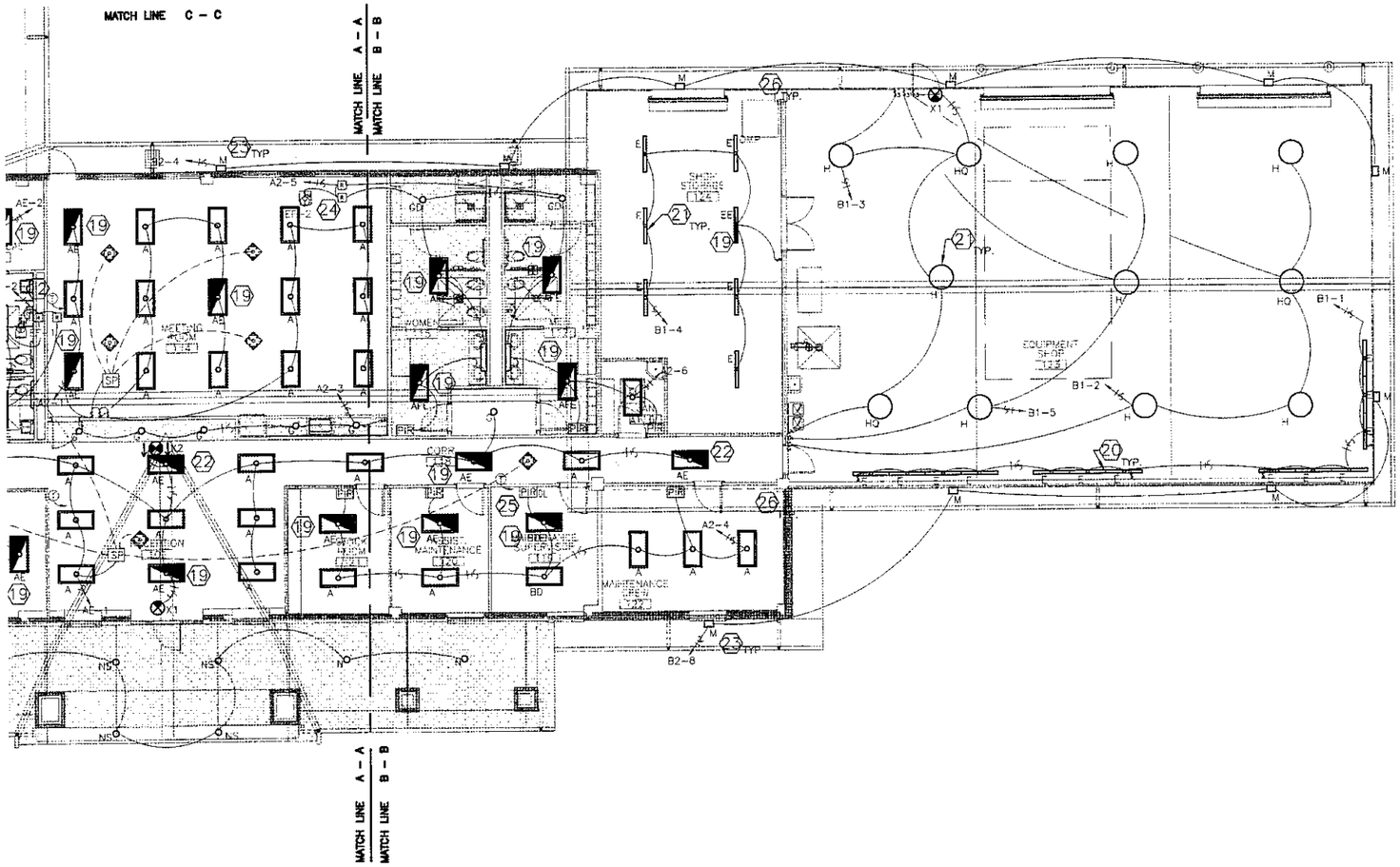

1 LIGHTING PLAN KEY PLAN BLDG.#1
SCALE: 1/8" = 1'-0"

NORTH

0' 2' 4' 8' 16'

SEE E2.1 FOR GENERAL AND KEYED NOTES

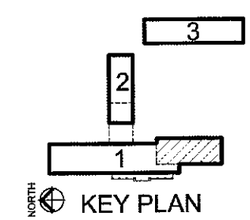

KEY PLAN

LIGHTING PLAN-BLDG.#1

NOTE: THIS DRAWING WAS CREATED FOR PRODUCTION ON 22" x 34" SHEET SIZE. DO NOT SCALE PRINTS.

Texas Department of Transportation
125 E. 11th Street
Austin, Texas 78701-2483
(512) 416-3048
Copyright © 2005 Texas Department of Transportation

STATE OF TEXAS
ROBERT S. RAY
40152
LICENSED PROFESSIONAL ENGINEER
3/23/05

SOUTH TRAVIS AREA ENGINEER AND MAINTENANCE FACILITY
AUSTIN, TRAVIS COUNTY
AUSTIN DISTRICT 14

Revisions
△
△
△
△

Drawn by:
CARL O. NIX, P.E.
Project No.
470400238
Date
03.23.2005
Sheet No.

E2.2
of X sheets

CADFILE: T:\MNTF\MD14\US\470400238\Acad\MEP\E2_1__E2_9.dwg Plotted: Wed, Mar. 23, 2005 @ 10:59 AM By: CNIX

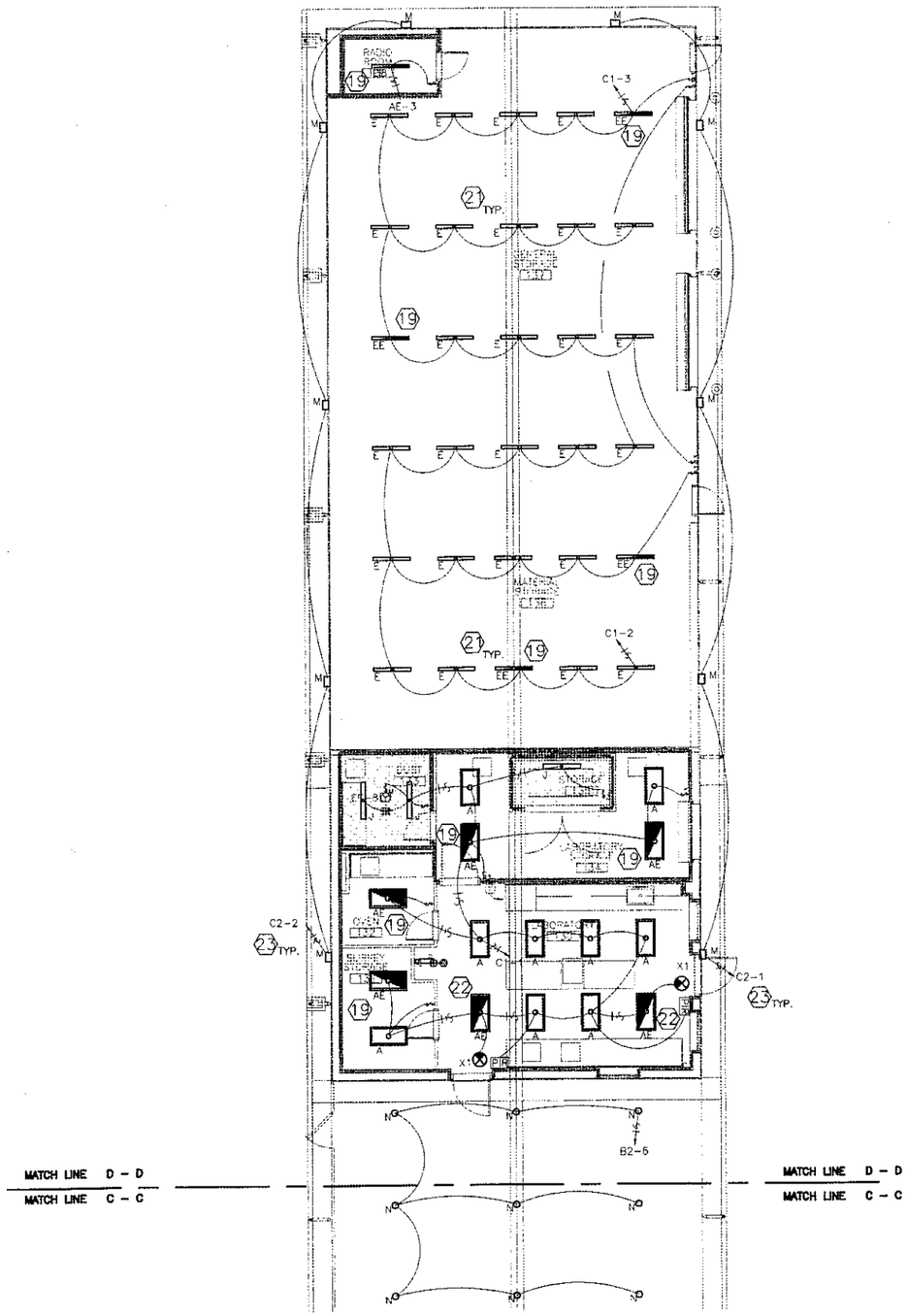

1 LIGHTING PLAN KEY PLAN BLDG. #2
SCALE: 1/8" = 1'-0"

SEE E2.1 FOR GENERAL AND KEYED NOTES

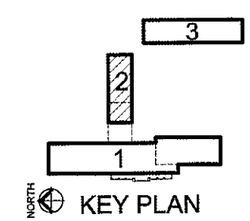

KEY PLAN

LIGHTING PLAN-BLDG.#2

NOTE: THIS DRAWING WAS CREATED FOR PRODUCTION ON 22" x 34" SHEET SIZE. DO NOT SCALE PRINTS.

Texas Department of Transportation
125 E. 11th Street
Austin, Texas 78701-2483
(512) 416-3048
Copyright © 2005 Texas Department of Transportation

STATE OF TEXAS
ROBERT S. RAY
40152
LICENSED PROFESSIONAL ENGINEER
3/23/05

SOUTH TRAVIS AREA ENGINEER AND MAINTENANCE FACILITY
AUSTIN, TRAVIS COUNTY
AUSTIN DISTRICT 14

Revisions

Drawn by:
CARL O. NIX, P.E.
Project No.
470400238
Date
03.23.2005
Sheet No.
E2.3
of X sheets

CADFILE: T:\MNTFMD\14\US470\40\0238\Acad\MEP\E2_1_E2_9.dwg Plotted: Wed, Mar. 23, 2005 @ 10:57 AM By: CNIX

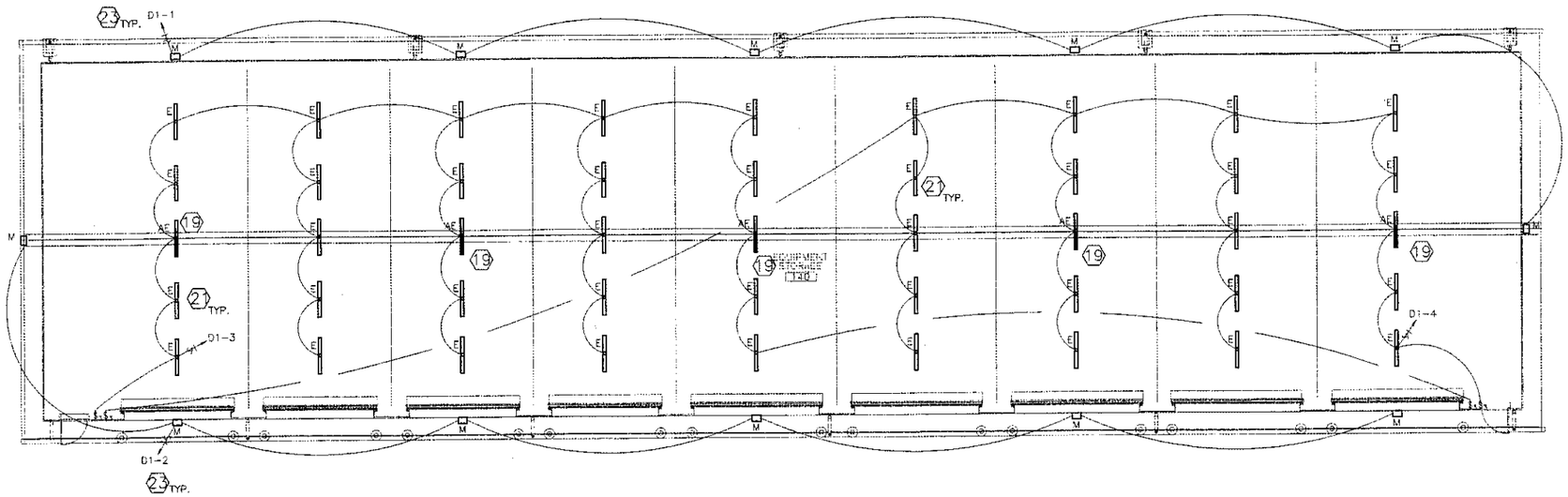

1 LIGHTING PLAN KEY PLAN BLDG. #3
SCALE: 1/8" = 1'-0"

0' 2' 4' 8' 16'

NORTH

SEE E2.1 FOR GENERAL AND KEYED NOTES

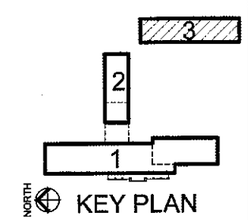

KEY PLAN

LIGHTING PLAN-BLDG.#3

NOTE: THIS DRAWING WAS CREATED FOR PRODUCTION ON 22" x 34" SHEET SIZE. DO NOT SCALE PRINTS.

CADFILE: T:\MNTFM\D14\US470400238\Acad\MEP\E2_1_E2_3.dwg Plotted: Wed, Mar. 23, 2005 @ 10:58 AM By: CNIX

Texas Department of Transportation
125 E. 11th Street
Austin, Texas 78701-2483
(512) 416-3048

Copyright © 2005 Texas Department of Transportation

STATE OF TEXAS
ROBERT S. RAY
40152
LICENSED PROFESSIONAL ENGINEER

SOUTH TRAVIS AREA ENGINEER AND MAINTENANCE FACILITY

AUSTIN, TRAVIS COUNTY
AUSTIN DISTRICT 14

Revisions

Drawn by:
CARL O. NIX, P.E.
Project No.
470400238
Date
03.23.2005
Sheet No.

E2.4
of X sheets

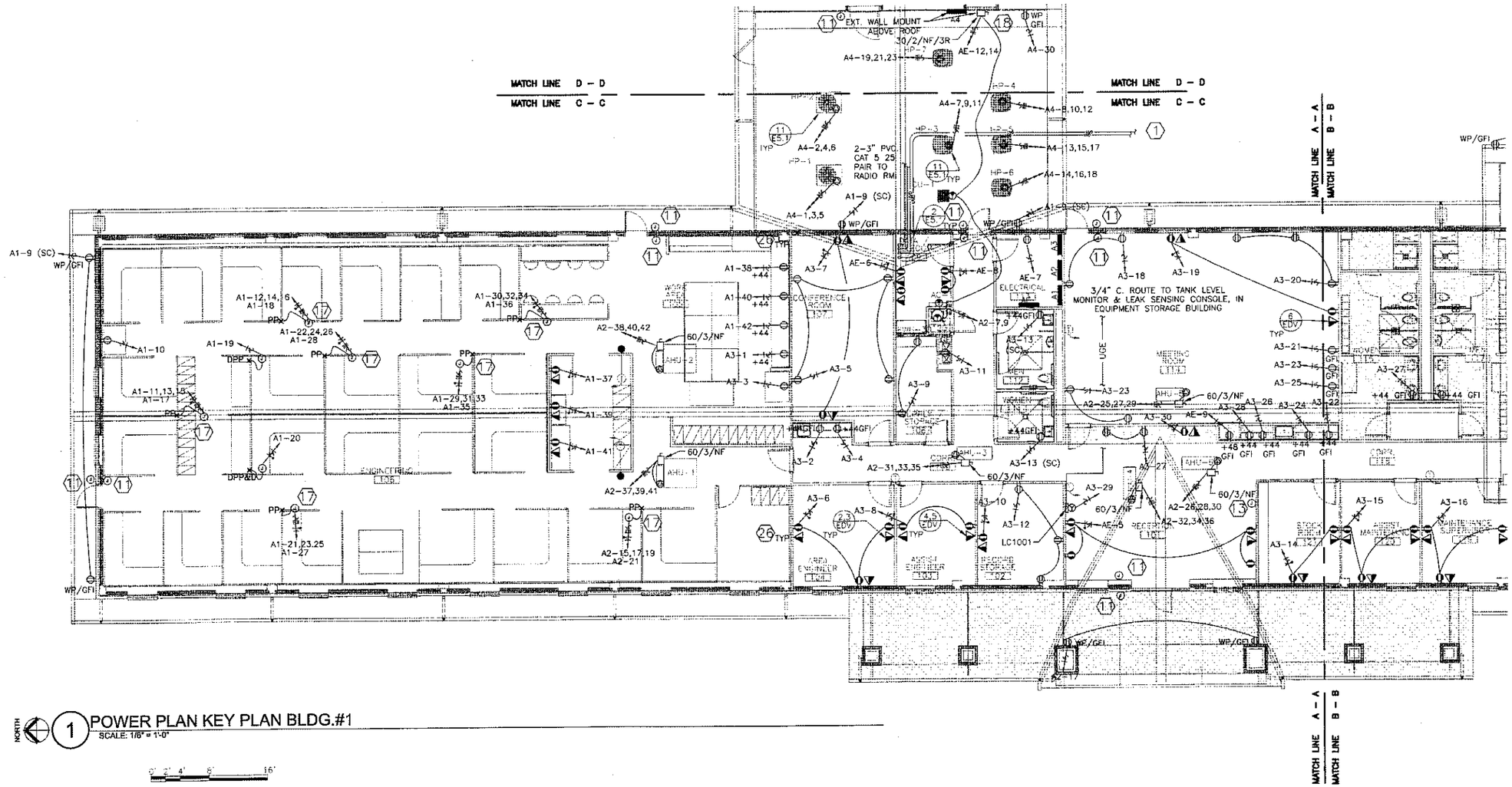

NORTH 1 POWER PLAN KEY PLAN BLDG.#1
SCALE: 1/8" = 1'-0"

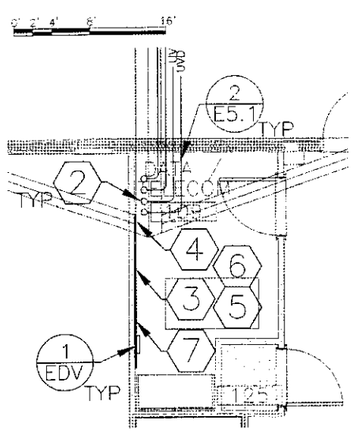

NORTH 2 DATA/TELECOM ROOM - BLDG.#1
SCALE: 1/4" = 1'-0"

SEE E2.1 FOR GENERAL AND KEYED NOTES

MODULAR FURNITURE WIRE STANDARD

MODULAR FURNITURE POWER (4 CIRCUIT 3-HOT, 3 WIRES)

PHASE	SIZE	COLOR	INSULATION	FUNCTION
A	#12	RED		HOT 1
B	#12	BLACK		HOT 2
C	#12	BLUE		HOT 3
NEUT.	#10	WHITE	WHITE #10 AWG THAMWTHHN	OVER-SIZED NEUTRAL
GND.	#12	GREEN		GROUND
A,B,OR C	#12	PINK		HOT 4
NEUT.	#12	GREY		NEUTRAL
GND.	#12	GREEN / YELLOW		ISOLATED GROUND

NOTE: WIRE SIZES ARE MINIMUM. WHERE HOMERUNS EXCEED 100FT IN LENGHT #12 CONDUCTORS SHALL BECOME #10 AND #10 CONDUCTORS SHALL BECOME #8.

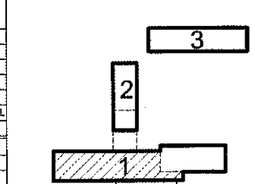

NORTH KEY PLAN

POWER PLAN-BLDG.#1

NOTE: THIS DRAWING WAS CREATED FOR PRODUCTION ON 22" x 34" SHEET SIZE. DO NOT SCALE PRINTS.

Texas Department of Transportation
125 E. 11th Street
Austin, Texas 78701-2483
(512) 416-3048
Copyright © 2005 Texas Department of Transportation

STATE OF TEXAS
ROBERT S. RAY
40152
LICENSED PROFESSIONAL ENGINEER
3/23/05

SOUTH TRAVIS AREA ENGINEER AND MAINTENANCE FACILITY

AUSTIN, TRAVIS COUNTY
AUSTIN DISTRICT 14

Revisions

Drawn by:
CARL O. NIX, P.E.
Project No.
470400238
Date
03.23.2005
Sheet No.

E2.5
of X sheets

CADFILE: T:\MNTFM\0144US\470400238\Acad\MEP\E2_1 _ E2_9.dwg Plotted: Wed, Mar. 23, 2005 @ 10:56 AM By: CNIX

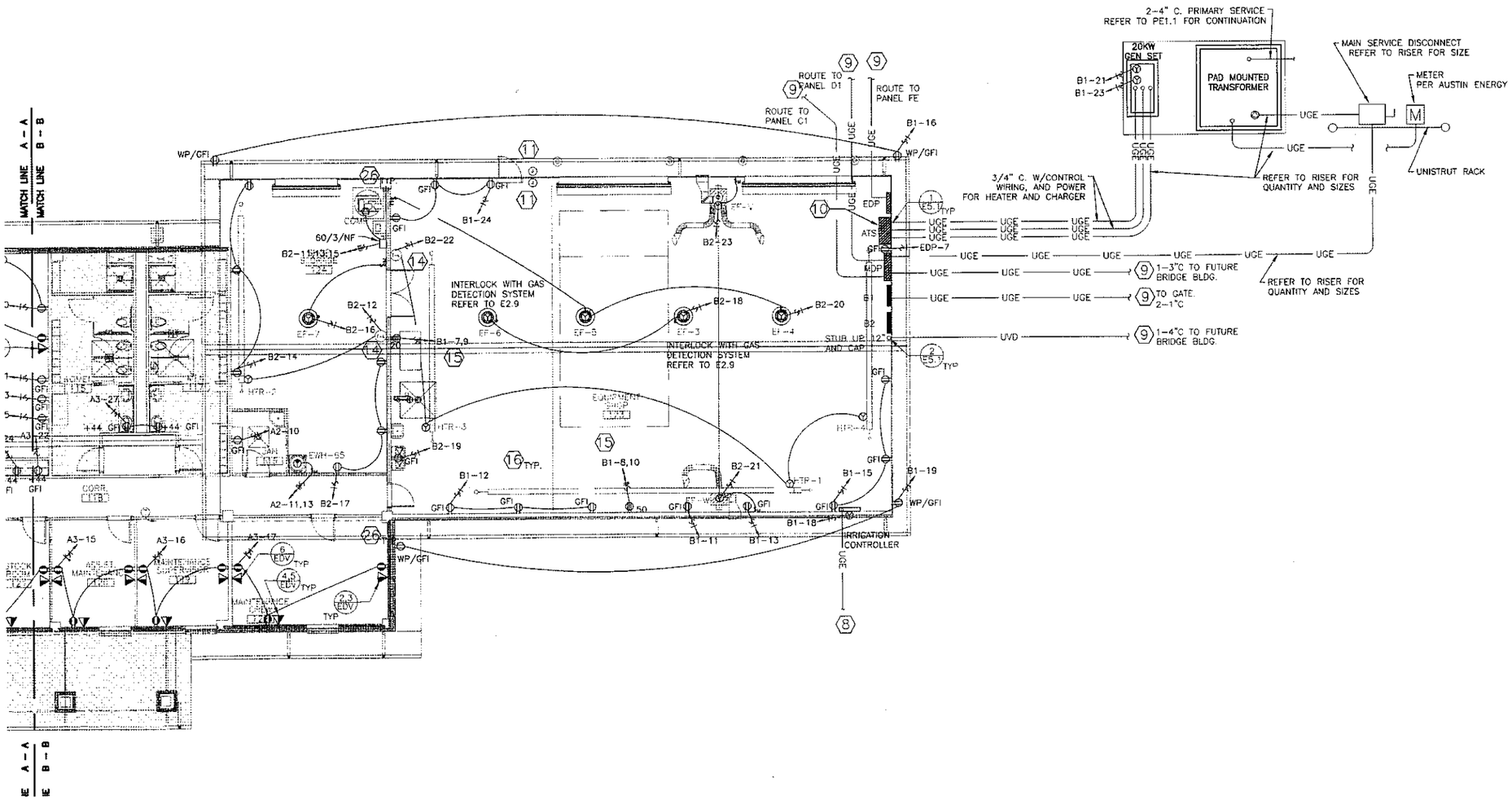

1 POWER PLAN KEY PLAN BLDG. #1
SCALE: 1/8" = 1'-0"

SEE E2.1 FOR GENERAL AND KEYED NOTES

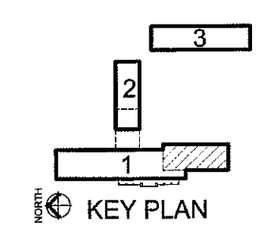

POWER PLAN-BLDG.#1

NOTE: THIS DRAWING WAS CREATED FOR PRODUCTION ON 22" x 34" SHEET SIZE. DO NOT SCALE PRINTS.

Texas Department of Transportation
125 E. 11th Street
Austin, Texas 78701-2483
(512) 416-3048
Copyright © 2005 Texas Department of Transportation

STATE OF TEXAS
ROBERT S. RAY
40152
LICENSED PROFESSIONAL ENGINEER
3/23/06

SOUTH TRAVIS AREA ENGINEER AND MAINTENANCE FACILITY
AUSTIN, TRAVIS COUNTY
AUSTIN DISTRICT 14

Revisions
1
2
3

Drawn by:
CARL O. NIX, P.E.
Project No.
470400238
Date
03.23.2005
Sheet No.
E2.6
of X sheets

CADFILE: T:\MNITFMD\14AUS\470400238\Acad\MEP\E2_1_E2_9.dwg Plotted: Wed, Mar. 23, 2005 @ 10:58 AM By: CNIX

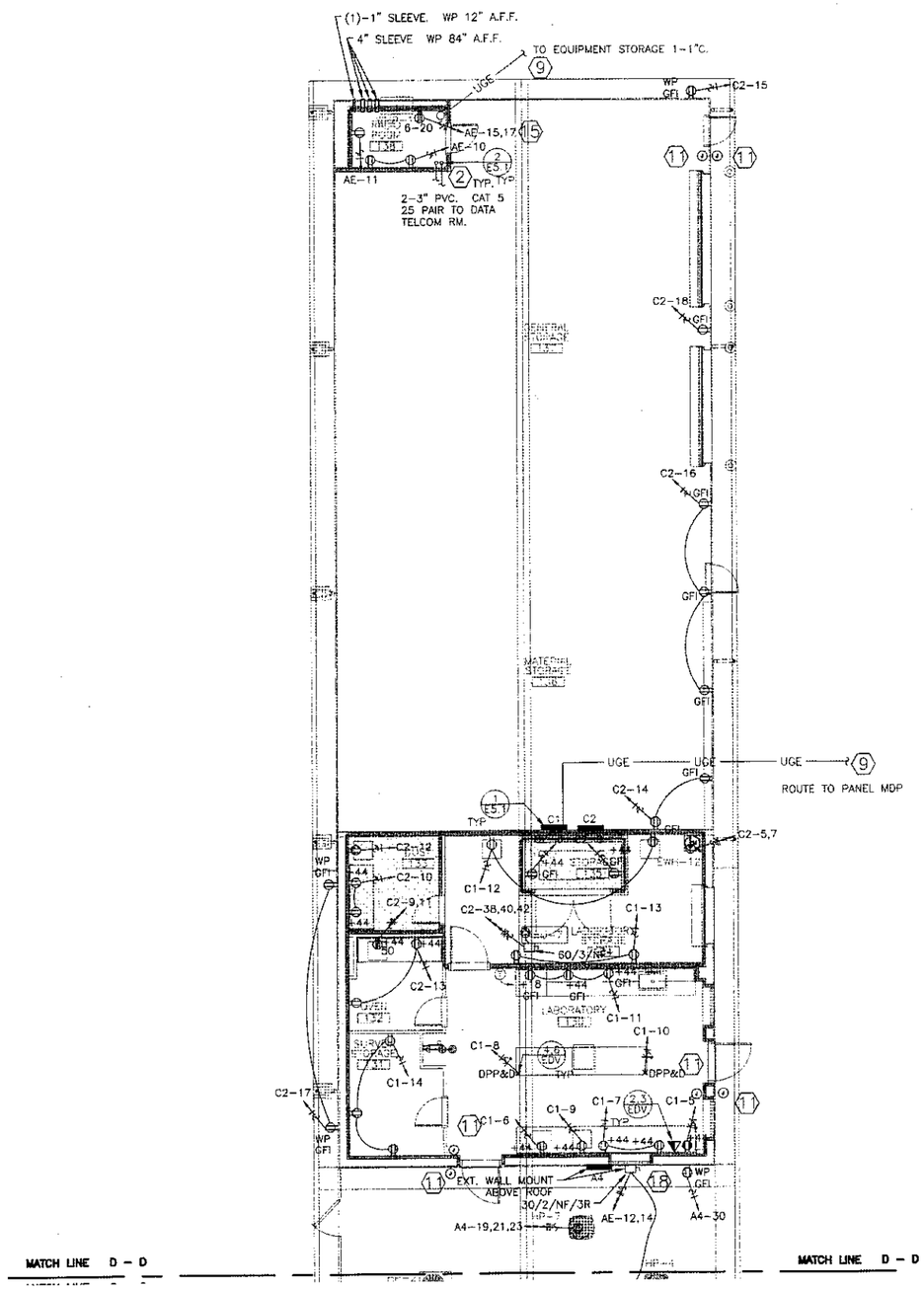

NORTH

1 POWER PLAN KEY PLAN BLDG. #2
SCALE: 1/8" = 1'-0"

0' 2' 4' 8' 16'

SEE E2.1 FOR GENERAL AND KEYED NOTES

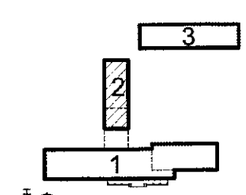

NORTH KEY PLAN

POWER PLAN-BLDG.#2

NOTE: THIS DRAWING WAS CREATED FOR PRODUCTION ON 22" x 34" SHEET SIZE. DO NOT SCALE PRINTS.

Texas Department of Transportation
125 E. 11th Street
Austin, Texas 78701-2483
(512) 416-3048
Copyright © 2005 Texas Department of Transportation

STATE OF TEXAS
ROBERT S. RAY
40162
LICENSED PROFESSIONAL ENGINEER

SOUTH TRAVIS AREA ENGINEER AND MAINTENANCE FACILITY

AUSTIN, TRAVIS COUNTY
AUSTIN DISTRICT 14

Revisions

Drawn by:
CARL O. NIX, P.E.
Project No.
470400238
Date
03.23.2005
Sheet No.

E2.7
of X sheets

CADFILE: T:\MNTFMD\14AUS\470400238\cad\MEP\E2_1__E2_8.dwg Plotted: Wed, Mar. 23, 2005 @ 10:56 AM By: CNIX

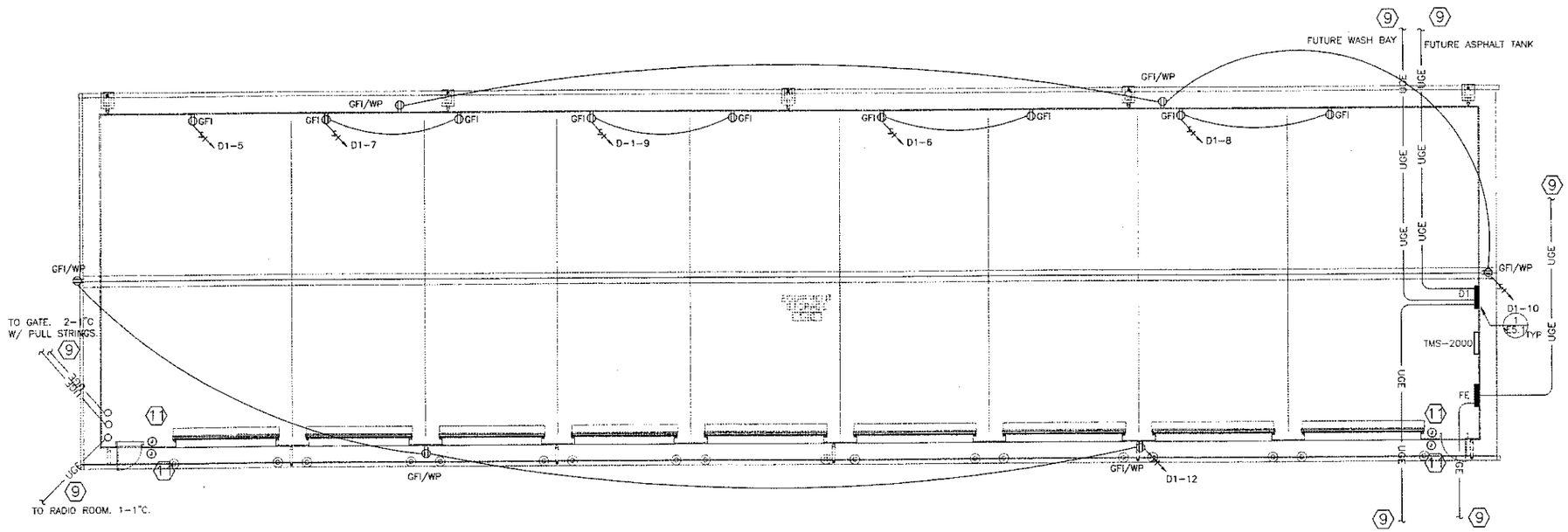

NORTH

1 POWER PLAN KEY PLAN BLDG. #3
SCALE: 1/8" = 1'-0"

0' 2' 4' 8' 16'

SEE E2.1 FOR GENERAL AND KEYED NOTES

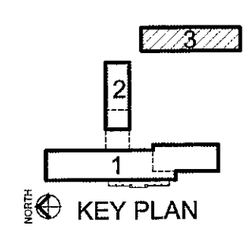

KEY PLAN

POWER PLAN-BLDG.#3

NOTE: THIS DRAWING WAS CREATED FOR PRODUCTION ON 22" x 34" SHEET SIZE. DO NOT SCALE PRINTS.

CADFILE: T:\MNTFMD14\US\470400238\Acad\MEP\E2_1_ E2_8.dwg Plotted: Wed, Mar. 23, 2005 @ 10:55 AM By: CNX

Texas Department of Transportation
125 E. 11th Street
Austin, Texas 78701-2483
(512) 416-3048
Copyright © 2005 Texas Department of Transportation

STATE OF TEXAS
ROBERT S. RAY
40152
LICENSED
PROFESSIONAL ENGINEER

SOUTH TRAVIS AREA ENGINEER AND MAINTENANCE FACILITY
AUSTIN, TRAVIS COUNTY
AUSTIN DISTRICT 14

Revisions

Drawn by:
CARL O. NIX, P.E.
Project No.
470400238
Date
03.23.2005
Sheet No.
E2.8
of X sheets

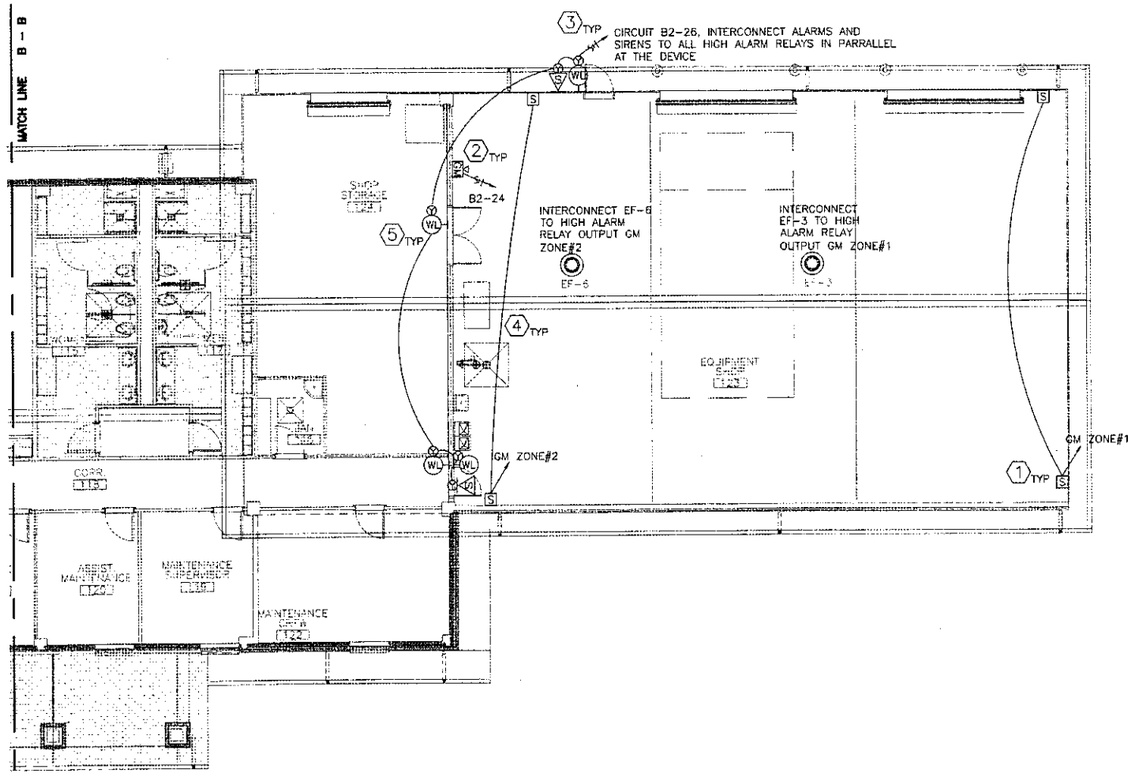

1 GAS DETECTION PLAN KEY PLAN BLDG. #1
SCALE: 1/8" = 1'-0"

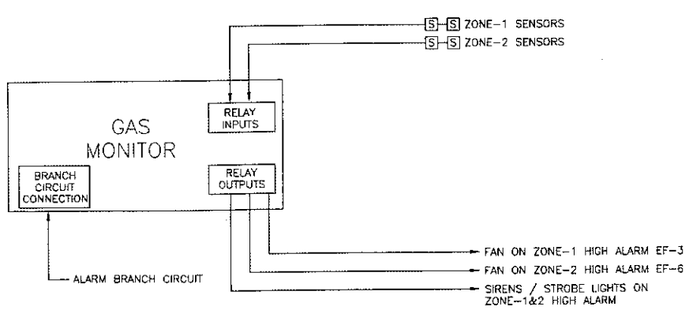

2 LPG GAS DECTECTION RISER
SCALE: NOT TO SCALE

LIQUID PETROLEUM GAS DETECTION LEGEND & SCHEDULE

MARK	ZONES	MANUFACTURER, MODEL/SIZE	DESCRIPTION
GM	2	ARMSTRONG, AMC-1022D-2	MULTIDROP GAS MONITORING SYSTEM WITH TWO SEPARATE ZONES WHICH INCLUDE A HIGH AND A LOW ALARM 120V 10 AMP RELAY PER ZONE. SUPPLY VOLTAGE 120VAC, 60HZ. FEATURING LED LOW, HIGH, AND FAIL INDICATION. INTERCONNECT EXHAUST FANS AND STROBE WARNING LIGHTS (SEE ELECTRICAL). LABEL EACH ZONE ACCORDINGLY. INSTALL PER MANUFACTUR'S RECOMMENDATIONS.
S	---	ARMSTRONG, AMC-1225 COMBUSTIBLE GAS	MULTIDROP GAS SENSOR MODULE COMPATIBLE WITH AMC-1022D. SENSORS SHALL BE WIRED IN SERIES DAISY CHAINED TOGETHER FOR EACH ZONE LEAVE THE TERMNINATING JUMPER ON THE END SENSOR UNIT. SENSOR IS SOLID STATE, 0 - 50% LEL, PVC ENCLOSURE. MOUNT ALL SENSORS 18" ABOVE FINISHED FLOOR.
WL	---	FEDERAL SIGNAL CORPORATION, ELECTRAFLASH MODEL#141ST-120A	"ELECTRAFLASH" STROBE WARNING LIGHT FEDERAL SIGNAL GRAINGER #3T94B LENS COLOR BLUE 120VAC 0.06 AMPS. COMPLETE WITH MOUNTING KIT, GRAINGER #5T588. MOUNT LIGHTS 10 FT ABOVE FINISHED GRADE.
S	---	FEDERAL SIGNAL CORPORATION, MODEL A-120 ELECTRIC SIREN, 120 VAC/DC, RED	GENERAL PURPOSE ELECTRO-MECHANICAL SIREN FOR INDUSTRIAL APPLICATIONS. 120VAC 1.8 AMPS. EQUIPED WITH AN INTERNAL FAN, METAL HOUSING, RATED AT 108dB @ 10'.

GAS DETECTION KEYED NOTES -

1. MOUNT SENSORS 18" A.F.F. DAISY CHAIN SENSORS TOGETHER.
2. MOUNT GAS MONITOR 48 A.F.F.
3. UNLESS OTHERWISE NOTED, ALL HOME RUNS SHALL BE 3 # 12 THHN, 3/4" EMT CONDUIT.
4. ALL SENSOR CONNECTIONS SHALL BE 3 # 18 SHEILD, 1/2" EMT CONDUIT.
5. MOUNT STROBE LIGHTS AND SIRENS 10FT A.F.F..

SEE E2.1 FOR GENERAL AND KEYED NOTES

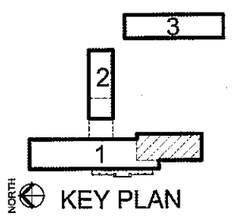

KEY PLAN

GAS DETECTION PLAN-BLDG.#1

NOTE: THIS DRAWING WAS CREATED FOR PRODUCTION ON 22" x 34" SHEET SIZE. DO NOT SCALE PRINTS.

Texas Department of Transportation
125 E. 11th Street
Austin, Texas 78701-2483
(512) 416-3048
Copyright © 2005 Texas Department of Transportation

STATE OF TEXAS
ROBERT S. RAY
40152
LICENSED PROFESSIONAL ENGINEER

SOUTH TRAVIS AREA ENGINEER AND MAINTENANCE FACILITY
AUSTIN, TRAVIS COUNTY
AUSTIN DISTRICT 14

Revisions
1
2
3
4

Drawn by:
CARL O. NIX, P.E.
Project No.
470400238
Date
03.23.2005
Sheet No.
E2.9
of X sheets

CADFILE: T:\MNTFMD14\DS470400238\Acad\MEPE2_1_E2_9.dwg Plotted: Wed, Mar. 23, 2005 @ 10:55 AM By: CNDX

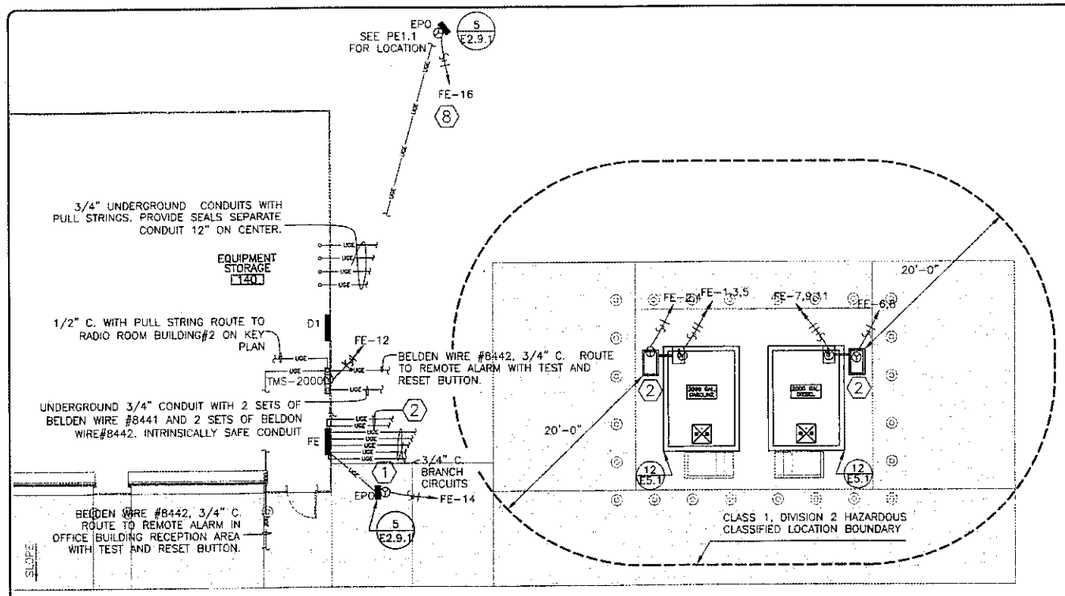

NORTH

1 FUEL STATION POWER AND SPECIAL SYSTEMS
SCALE: 1/8" = 1'-0"

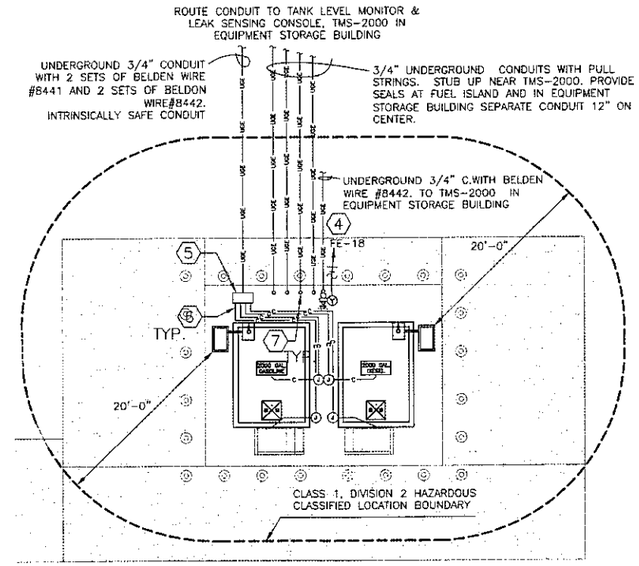

NORTH

2 FUEL STATION SPECIAL SYSTEMS
SCALE: 1/8" = 1'-0"

FUEL STATION NOTES

1. ALL BRANCH CIRCUIT WIRING FROM PANEL "FE" TO THE FUEL STATION SHALL BE TYPE THHN GASOLINE & OIL RESISTANT SOLID WIRE A MINIMUM OF #12 WIRE IN 3/4"C., GASOLINE RESISTANT, AND INSTALLED IN RIGID GALVANIZED STEEL (R.G.S.). ALL BELOW GRADE CONDUIT SHALL BE RIGID NONMETALIC CONDUIT ENCASED IN RED CONCRETE 3" THICK . ALL LONG RADIUS 90° ELBOWS EMERGING FROM THE EARTH OR CONCRETE SHALL BE RIGID GALVANIZED STEEL AND DOUBLE WRAPPED. CONTRACTOR SHALL INSTALL EXPLOSION-PROOF SEALS IN RIGID GALVANIZED STEEL.

2. THE FIRST FITTING ABOVE THE SLAB SHALL BE AN N.E.C. APPROVED EXPLOSION-PROOF SEAL INSTALL AND PROVIDE SEALS IN ALL CONDUITS EMERGING AND LEAVING THE SLAB AT THE FUEL ISLAND AND AT PANEL "FE", PER N.E.C. . ALL CONDUITS MARKED INTRINSICALLY SAFE SHALL BE EXEMPT FROM EXPLOSION PROOF SEALS, BUT SHALL BE KEPT SEPARATE FROM ALL OTHER WIRES AND CONDUITS FROM THE TANK LEVEL MONITOR AND LEAK SENSING CONSOLE TO THE SENSORS AND PROBES.

3. THE ELECTRICAL INSTALLATION FOR THE FUEL ISLAND, INCLUDING POWER AND COMMUNICATIONS, SHALL COMPLY WITH THE NATIONAL ELECTRICAL CODE, ARTICLES 500, 501, 502, 504, AND 514 AND ALL RELATED ARTICLES THEREOF.

4. ALL CONDUITS SHALL BE INSTALLED UNDERGROUND PRIOR TO FUEL ISLAND'S CONCRETE FOUNDATION INSTALLATION.

5. PROVIDE AND INSTALL A TANK LEVEL AND MONITORING AND LEAK SENSING SYSTEM BY PNEUMERCATOR, "TMS 2000 SERIES" IN EQUIPMENT STORAGE BUILDING WITH A LC1002 REMOTE ALARM AND TEST RESET BUTTON LOCATED AT FUEL ISLAND AND A LC1001 REMOTE ALARM IN OFFICE BUILDING IN RECEPTION AREA. IF A DIFFERENT SYSTEM IS PROVIDED, IT SHALL BE THE CONTRACTOR'S RESPONSIBILITY TO PROVIDE THE CORRECT TYPE AND QUANTITY OF COMMUNICATION CABLING AND CONDUITS FOR THAT SYSTEM.

6. CONTRACTOR SHALL FOLLOW THE MANUFACTURER'S RECOMMENDATIONS FOR INSTALLATION REQUIREMENTS. IT IS THE CONTRACTORS RESPONSIBILITY TO INSTALL AND PROVIDE A FULLY FUNCTIONAL SYSTEM INCLUDING ALL THE NECESSARY FITTINGS AND HARDWARE. SENSORS, PROBES, RISERS, RISER CAPS AND ATTACHMENTS FOR A COMPLETE FUNCTIONING SYSTEM.

7. NO SPLICES SHALL BE MADE IN THE WIRE RUN BETWEEN A SENSOR OR PROBE JUNCTION BOX AND THE TANK LEVEL MONITOR & LEAK SENSING CONSOLE.

8. WHERE EMERGENCY POWER-OFF SWITCH (EPO) IS REQUIRED TO CONTROL ADDITIONAL CIRCUIT BREAKERS, ALL SHUNT TRIP DEVICES SHALL BE CONNECTED IN PARALLEL UTILIZING THE SAME CONTROL CIRCUIT.

9. MOUNT EACH EPO - EMERGENCY POWER OFF SWITCH TO ACTIVATE SHUNT TRIP CIRCUIT BREAKERS IN PANEL "FE" ON PEDESTAL PER NEC 48" A.F.G. REFER TO SHEET PE1.1 FOR FURTHER REQUIREMENTS ON LOCATIONS. THE SWITCH SHALL BE LOCATED MORE THAN 20 BUT LESS THAN 100FT FROM GAS/DIESEL FUEL DISPENSERS AND LPG FUEL DISPENSOR. REFER TO SHEET PE1.1 FOR LOCATIONS AND THIS SHEET DETAIL#5 FOR FURTHER REQUIREMENTS.

10. EACH EPO SWITCH SHALL DISCONNECT SIMULTANEOUSLY FROM THE SOURCE OF SUPPLY, ALL CONDUCTORS OF THE CIRCUIT, INCLUDING THE GROUNDED CONDUCTOR PER N.E.C., ARTICLE 514-11(A) "CIRCUIT DISCONNECTS".

11. FURNISH AND INSTALL TWO EMERGENCY POWER-OFF SWITCHES (EPO) WITH A MAINTAINED "MUSHROOM HEAD" PUSH BUTTON - SQUARE D CAT. NO. ZB5AS64, AND AN EMERGENCY STOP LEGEND - SQUARE D CAT. NO. ZBY9330 OR APPROVED EQUAL. MOUNT PUSH BUTTON IN A 4" SQUARE WEATHERPROOF BOX WITH A CLEAR PROTECTIVE COVER. ONE EPO SWITCH SHALL DISCONNECT POWER TO THE FUEL ISLAND. THE SECOND EPO SWITCH SHALL DISCONNECT POWER TO THE LPG FUELING STATION. REFERENCE PE1.1 FOR ITS LOCATION.

12. PROVIDE TWO HOURS OF TRAINING TO OWNER SELECTED PERSONNEL ON TANK LEVEL AND MONITORING AND LEAK SENSING SYSTEM BY MANUFACTOR.

13. FUEL STATION CONTRACTOR SHALL SUBMIT TO THE OWNER A CERTIFICATION LETTER FROM THE TANK LEVEL MONITORING AND THE LEAK SENSING SYSTEM MANUFACTURER AND THE FUEL TANK MANUFACTURER STATING THE SYSTEM IS FUNCTIONING AND INSTALLED PROPERLY.

14. INTRINSICALLY SAFE INPUT WIRING SHALL BE INSTALLED IN PER N.E.C. ARTICLE 504. NON-TRINSICALLY SAFE WIRING CANNOT BE RUN IN CONDUIT OR OPEN RACEWAYS TOGETHER WITH INTRINISICALLY SAFE WIRING.

KEYED NOTE - ⬡

1. MOUNT EPO - EMERGENCY POWER OFF SWITCH TO ACTIVATE SHUNT TRIP MAIN BREAKER IN FE PANEL ON PEDESTAL PER NEC 48" A.F.G. EPO SWITCH SHALL BE LOCATED WITHIN 20 TO 100FT FROM GAS/DIESEL DISPENSOR. COORDINATE LOCATION WITH OTHER DISIPLINES.

2. INSTALL A SPARE RACEWAY AND PULL WIRE FROM PANEL "FE" TO FUEL STATION STUB UP BESIDE CIRCUIT CAP AND INSTALL EXPLOSION PROOF SEALS. CONDUIT SIZE AND MATERIAL SHALL MATCH CIRCUIT.

3. NOT USED.

4. INSTALL AND PROVIDE PEDESTAL MOUNTED 8FT A.F.F. SURFACE MOUNTED REMOTE AUDIBLE / VISIBLE ALARM WITH TEST AND RESET BUTTON ANNUNCIATOR BY TANK LEVEL MONITOR MANUFACTURER AS SCHEDULED. REFER TO THIS SHEET / DETAIL#3 FOR WIRING INSTRUCTIONS. TANK LEVEL MONITORING AND LEAK SENSING SYSTEM SHALL SEND AN AUDIBLE/VISIBLE ALARM AT THE FUEL ISLAND AND CONSOLE WHEN THE LIQUID LEVEL IN THE DIESEL AND/OR GASOLINE FUEL STORAGE TANK REACHES THE 90% STORAGE CAPACITY AND/OR UPON LEAK DETECTION.

5. STUB UP 3/4" R.G.S INTO EXPLOSION PROOF JUNCTION BOX.

6. ABOVEGROUND 3/4" CONDUITS WITH BELDEN WIRE #8441 TO EXPLOSION PROOF JUNCTION BOX. LOCATE EXPLOSION PROOF JUNCTION BOXS FOR CONNECTION TO SENORS AND PROBES. PROVIDE LIQUID TIGHT SPLICES. ANCHOR CONDUITS TO TOP OF SLAB WITH UNISTRUT. PROVIDE EXPOLSION PROOF SEALS TO THE FOUR CONDUITS PROVIDING COMMUNICATION TO PROBES AND SENSORS.

7. ROUTE FROM EQUIPMENT STORAGE BUILDING NEAR LEAK SENSING CONSOLE. STUB UP WITH R.G.S. INSTALL EXPLOSION PROOF SEALS ON EACH CONDUIT ENTERING AND LEAVING THE SLAB, FOR FUTURE FUEL MANAGEMENT SYSTEM. EACH STUB SHALL BE SEPARATED 12" ON CENTER.

8. MOUNT EPO - EMERGENCY POWER OFF SWITCH TO ACTIVATE SHUNT TRIP MAIN BREAKER IN FE PANEL ON PEDESTAL PER NEC 48" A.F.G. REFER TO SHEET PE1.1 FOR ACTUAL LOCATION. EPO IS SHOWN HERE FOR CLARIFICATION. SWITCH SHALL BE LOCATED WITHIN 20 TO 100FT FROM LPG DISPENSER. COORDINATE LOCATION WITH OTHER DISIPLINES.

WARNING
NOTICE TO BIDDER

REFER TO SHEET FS2.1, E2.9.1 & PE1.1 FOR ADDITIONAL REQUIREMENTS.

FUEL STATION CONTRACTOR SHALL PROVIDE AND INSTALL THE TANKS, DISPENSERS, NOZZLES, PROBES, SENSORS AND LEAK DETECTION SYSTEMS COMPLETE WITH ALL CONDUIT, WIRE, JUNCTION BOXES, SEALS, CONTROLS, EPO, ETC. FOR A COMPLETE AND WORKING SYSTEM.

ELECTRICIAN SHALL PROVIDE AND INSTALL PANEL FE.

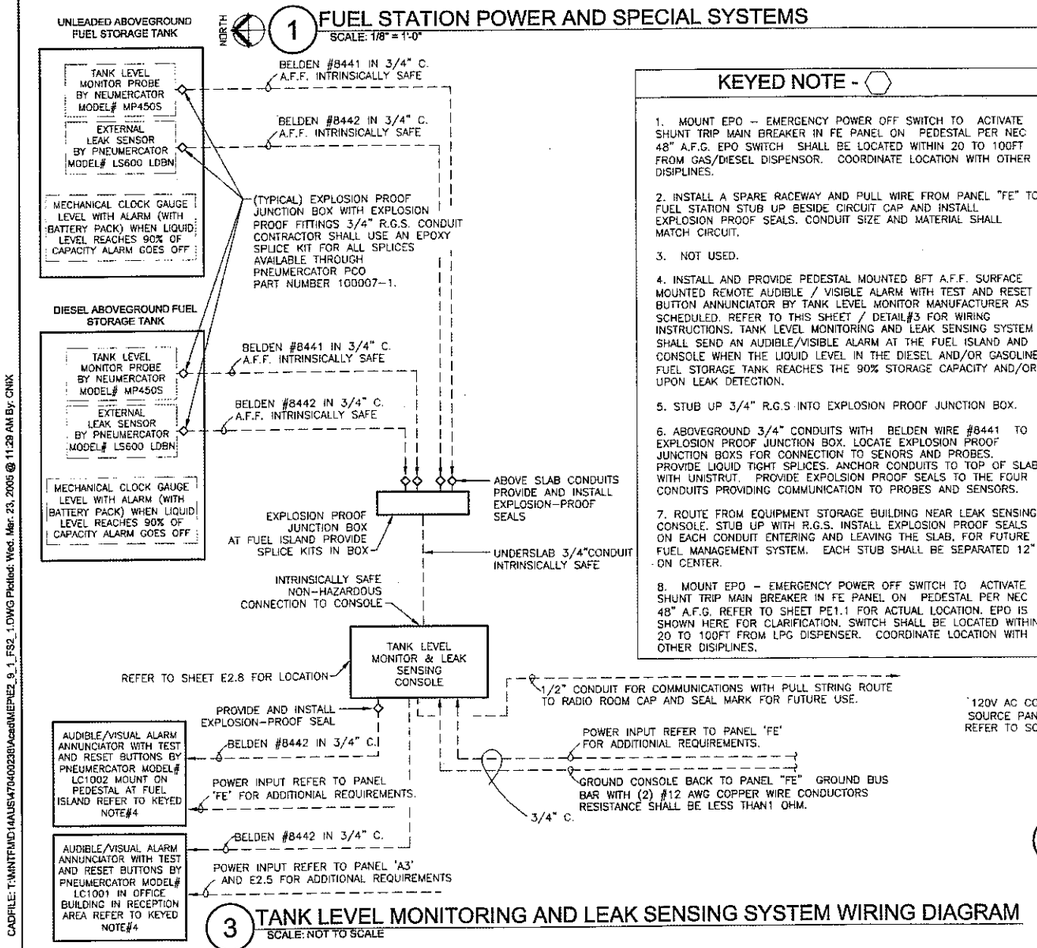

3 TANK LEVEL MONITORING AND LEAK SENSING SYSTEM WIRING DIAGRAM
SCALE: NOT TO SCALE

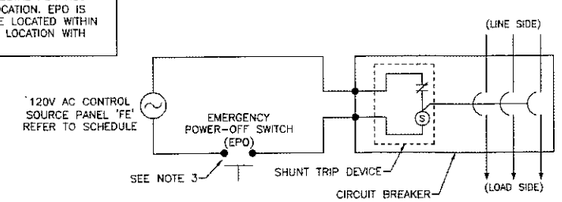

4 SHUNT TRIP WIRING DIAGRAM
SCALE: NOT TO SCALE

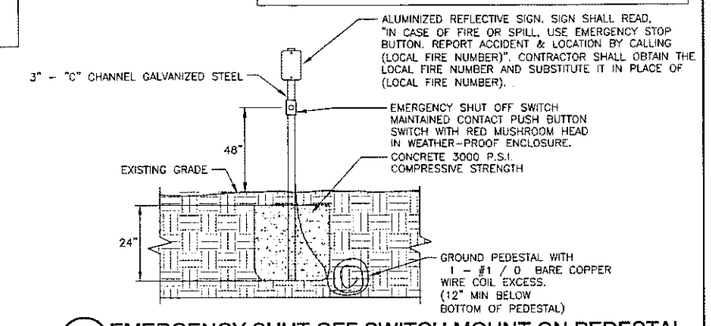

5 EMERGENCY SHUT OFF SWITCH MOUNT ON PEDESTAL
SCALE: NOT TO SCALE

POWER AND SPECIAL SYSTENS PLAN- FUEL STATION

NOTE: THIS DRAWING WAS CREATED FOR PRODUCTION 22"x 34" SHEET SIZE. DO NOT SCALE PRINTS.

Texas Department of Transportation
125 E. 11th Street
Austin, Texas 78701-2483
(512) 416-3048

Copyright © 2005 Texas Department of Transportation

STATE OF TEXAS
ROBERT S. RAY
40152
LICENSED PROFESSIONAL ENGINEER

SOUTH TRAVIS AREA ENGINEER
AND MAINTENANCE FACILITY
AUSTIN, TRAVIS COUNTY
AUSTIN DISTRICT 14

Revisions

Drawn by:
CARL O. NIX, P.E.
Project No.
470400238
Date
03.23.2005
Sheet No.
E2.9.1
of X sheets

CADFILE: T:\MNTFMD\14AUS\470400238\Acad\MEPIE2_9_1_FS2_1.DWG Plotted: Wed, Mar. 23, 2005 @ 11:29 AM By: CNIX

LIGHTING FIXTURE SCHEDULE

TYPE	MANUFACTURER AND MODEL NUMBER	VOLTAGE	LAMPS	NOTES	INPUT WATTS
A	LITHONIA 2SP8-G-232-A12125-120-GEB	120	2-F32T8	2 LAMP LAYIN TROFFER	65
AE	LITHONIA 2SP8-G-232-A12125-120-GEB-EL	120	2-F32T8	SAME AS 'A' WITH BATTERY PACK	65
AF	LITHONIA 2SP8-F-232-A12125-120-GEB	120	2-F32T8	SAME AS 'A' FLANGE MOUNT FOR GYPBORD CEILING	65
AFE	LITHONIA 2SP8-F-232-A12125-120-GEB-EL	120	2-F32T8	SAME AS 'A' FLANGE MOUNT FOR GYPBORD CEILING WITH BATTERY PACK	65
BD	LITHONIA 2SP8-G-332-A12125-120-GEB	120	3-F32T8	3 LAMP LAYIN TROFFER WITH DUAL LEVEL SWITCHING	100
BDE	LITHONIA 2SP8-G-332-A12125-120-GEB-EL	120	3-F32T8	SAME AS 'BD' WITH BATTERY PACK	100
D	LITHONIA WP-225-ACF125-120-GEB	120	2-F25T8	WALL MOUNTED FIXTURE MOUNT 8' A.F.F.	65
E	LITHONIA C-232-120-GEB-WG	120	2-F32T8	CHANNEL FIXTURE WITH WIRE GUARD	65
EE	LITHONIA C-232-120-GEB-WG-EL	120	2-F32T8	SAME AS 'E' WITH BATTERY PACK	65
GD	LITHONIA AF-2-18TRT-8-AR-T73-120	120	2-18TRT	RECESSED FLOURESCENT DOWNLIGHTING	40
G	LITHONIA AF-1-18TRT-8-AR-T73-120	120	1-18TRT	RECESSED FLOURESCENT DOWNLIGHTING	18
H	LITHONIA TXS-250M-A30-120	120	1-250W MH	LOW BAY FIXTURE	300
HQ	LITHONIA TXS-250M-A30-120-QRS	120	1-250W MH	SAME AS 'H' WITH QUARTZ RESTRIKE	300
J	LITHONIA DMW-232-AR-120-GEB	120	2-F32T8	ENCLOSED INDUSTRIAL CHANNEL FIXTURE	65
M	LITHONIA TWH-175M-120-DNA	120	1-175W MH	WALL PACK - COLOR BY ARCHITECT	210
N	LITHONIA LGH-70M-9-FW-DOL-120	120	1-70W MH	DAMP LOCATION RECESSED DOWN LIGHT	90
NS	LITHONIA LGH-70M-9-FW-DOL-120-SC	120	1-70W MH	DAMP LOCATION RECESSED DOWN LIGHT SLOPED CEILING	90
P	LITHONIA TFM-70M-TA-TB	208	1-70W MH	MOUNT FLOOD LIGHT 5 FEET FROM CENTER LINE OF SIGN	90
SR	LITHONIA KAD-400M-R2-TB-RPD09-DDB	208	1-400W MH	ROADWAY AREA LIGHT INSTALL LIGHT POLE 2FT FROM CURB	455
POLE	LITHONIA RTS-30-6-6B			POLE FOR AREA LIGHT. # OF FIXTURES /POLE ON PLANS	
X1	LITHONIA LHQM-S-W-1-R-120-N-H	120	LED	SINGLE FACE EXIT SIGN WITH HALOGEN LAMPS	3.9
X2	LITHONIA LHQM-S-W-2-R-120-N-H	120	LED	DOUBLE FACE EXIT SIGN WITH HALOGEN LAMPS	3.9

ELECTRICAL SYMBOLS LEGEND

- NOVITAS MODEL# 01-110 CEILING MOUNTED LARGE ROOM TWO-WAY ULTRASONIC MOTION SENSOR .
- NOVITAS MODEL# 01-190 CEILING MOUNTED TWO-WAY CORRIDOR ULTRASONIC MOTION SENSOR .
- SP — NOVITAS MODEL# 13-051 MOUNTED ABOVE CEILING HEAVY DUTY SWITCHPACK. 20 AMPS @ 120VAC BALLAST.
- PIR — NOVITAS SUPER SWITCH 2, MODEL# 01-400, PASSIVE INRARED WALL SWITCH. 6.7 AMPS @ 120VAC BALLAST.
- PIRDL — NOVITAS SUPER SWITCH 2, MODEL# 01-DL400, PASSIVE INRARED WALL SWITCH WITH CONTROL FOR TWO SEPARATE LOADS. RATED AT 6.7 AMPS @ 120VAC BALLAST.
- $ — WALL SWITCH
- $3 — 3-WAY WALL SWITCH
- $4 — 4-WAY WALL SWITCH
- $M — MANUAL MOTOR STARTER
- LIGHT FIXTURE
- EXIT SIGN
- EMERGENCY LIGHTING FIXTURE
- DUPLEX RECEPTACLE
- DOUBLE DUPLEX (QUAD) RECEPTACLE
- ISOLATED GROUND (IG) DUPLEX RECEPTACLE
- 208/240V RECEPTACLE-RATING AS SHOWN
- DISCONNECT SWITCH
- X — FULL VOLTAGE NON-REVERSING FUSIBLE DISCONNECT SWITCH TYPE COMBINATION STARTER X= NEMA SIZE
- X — FULL VOLTAGE NON-REVERSING CONTACTOR AND STARTER X= NEMA SIZE
- LC — LIGHTING CONTACTOR
- MC — MECHANICALLY HELD MULTIPOLE CONTACTOR
- T — FLOOR MOUNTED TRANSFORMER
- TC — TIME CLOCK
- R — RELAY
- HOA — HAND OF AUTO SELECTOR SWITCH
- DISTRIBUTION PANEL OR SWITCHBOARD
- PANELBOARD
- J — JUNCTION BOX
- 120V 1PH CONNECTION
- 208V 1PH CONNECTION
- 208V 3PH CONNECTION
- 240V 1PH CONNECTION
- 240V 3PH CONNECTION
- 277V 1PH CONNECTION
- 480V 3PH CONNECTION
- PC — PHOTO - CELL
- PP — POWER POLE
- DPP — POWER POLE WITH TWO RECESSED RECEPTACLES
- DPP&D — POWER POLE WITH TWO RECESSED RECEPTACLES AND STANDARD 2-VOICE, 2-DATA OUTLET
- VOICE ONLY
- STANDARD 2-VOICE, 2-DATA
- DATA LINE ONLY

BRANCH CIRCUIT & WIRE NOTATION

A1-10
- PANEL AND CIRCUIT NUMBERS
- EQUIPMENT GROUND
- ISOLATED GROUND
- SWITCH LEG
- HOT
- NEUTRAL

LISTED ABBREVIATIONS

BOF	BOTTOM OF FIXTURE
GFI	GROUND FAULT INTERUPT
WP	WEATHERPROOF DEVICE OR ENCLOSURE
RGS	RIGID GALVANIZED STEEL CONDUIT
PVC	POLY VINYL CLORIDE CONDUIT
EMT	ELECTRICAL METALIC TUBING CONDUIT
AFR	ABOVE FINISHED ROOF
AFF	ABOVE FINISHED FLOOR
BFG	BELOW FINSIHED GRADE
AFG	ABOVE FINISHED GRADE
SCH.	SCHEDULE

- UGE — UNDERGROUND ELECTRICAL
- UVD — UNDERGROUND VOICE DATA
- UGT — UNDERGROUND TELEPHONE SERVICE

TVSS/1 — ALLIED ELECTRONICS DTG-277-480-3Y. 100,000 AMP RATED WITH FACTORY SUPPLIED WIRES. PROVIDE AND INSTALL A 3 POLE, 30 AMP. CIRCUIT BREAKER, MINIMUM WIRE SIZE #10 WIRE.

TVSS/2 — ALLIED ELECTRONICS DTG-120-208-3Y. 100,000 AMP RATED WITH FACTORY SUPPLIED WIRES. PROVIDE AND INSTALL A 3 POLE, 30 AMP. CIRCUIT BREAKER, MINIMUM WIRE SIZE #10 WIRE.

TVSS/3 — ALLIED ELECTRONICS DTG-120-240-1. 100,000 AMP RATED WITH FACTORY SUPPLIED WIRES. PROVIDE AND INSTALL A SINGLE POLE, 30 AMP. CIRCUIT BREAKER, MINIMUM WIRE SIZE #10 WIRE.

ELECTRICAL LOAD ANALYSIS

LIGHTING LOAD @ 125% (VA)			47,406
AREA (SQ FT)	7,000	x3.5 =	24,500
CONNECTED LIGHT LOAD VA			37,925
LIGHTING VA			37,925
RECEPTACLE LOAD (VA)			48,020
CONNECTED RECPT LOAD	86,040		
1st 10KVA @ 100%	10,000		
REMAINDER @ 50%	38,020		
GENERAL LOAD @ 100% (VA)			116,508
LARGEST MOTOR LOAD @ 125% (VA)			11,385
COOLING LOAD @ 100% (VA)			60,120
HEATING LOAD @ 100% (VA)			123,360
SPARE CAPACITY (VA) @	20 %		69,336
TOTAL SERVICE KVA			416
TOTAL SERVICE AMPS @ 208	VOLTS		1,155

COOLING AND HEATING LOADS ARE NONCOINCIDENT.
ONLY THE LARGEST IS USED IN SERVICE CALCULATION

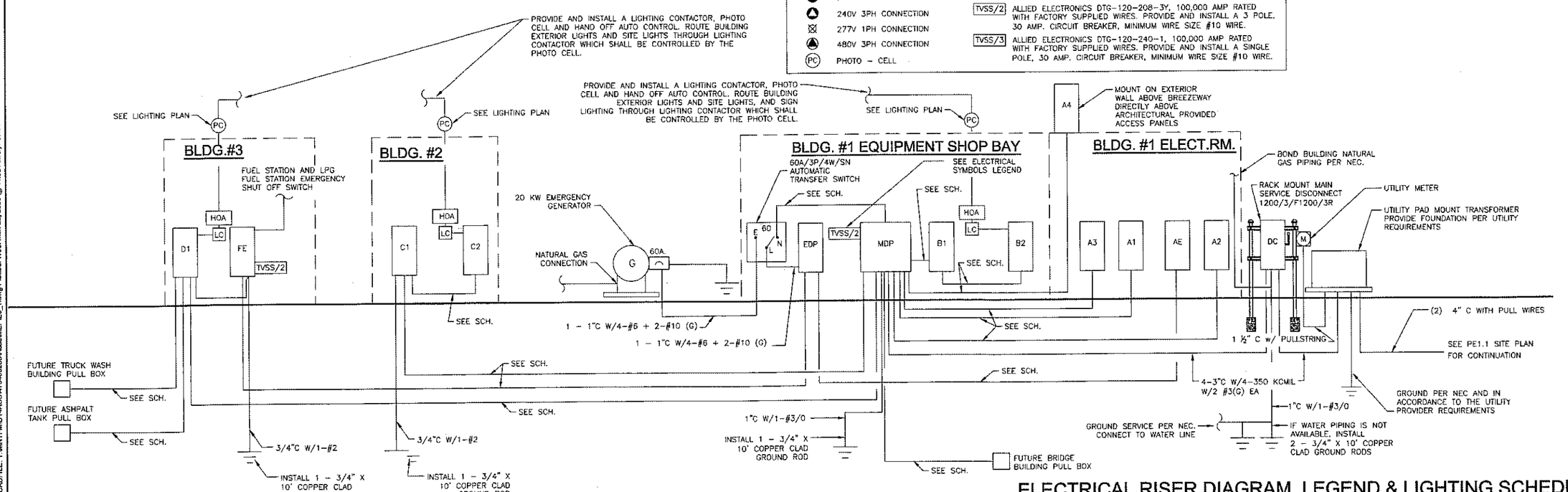

ELECTRICAL RISER DIAGRAM, LEGEND & LIGHTING SCHEDULE

NOTE: THIS DRAWING WAS CREATED FOR PRODUCTION ON 22" x 34" SHEET SIZE. DO NOT SCALE PRINTS.

Texas Department of Transportation
125 E. 11th Street
Austin, Texas 78701-2483
(512) 416-3040

Copyright © 2005 Texas Department of Transportation

STATE OF TEXAS
ROBERT S. RAY
40152
LICENSED PROFESSIONAL ENGINEER
3/23/05

SOUTH TRAVIS AREA ENGINEER AND MAINTENANCE FACILITY
AUSTIN, TRAVIS COUNTY
AUSTIN DISTRICT 14

Revisions

Drawn by: CARL O. NIX, P.E.
Project No. 470400238
Date 03.23.2005
Sheet No.
E3.1
of X sheets

CADFILE: T:\MNTFMD14\AUS\470400238\Acad\MEPE3_1.dwg Plotted: Wed, Mar. 23, 2005 @ 11:32 AM By: CNIX

PANEL MDP 1200A MLO — ISOLATED GROUND BAR

SERVICE 277/480V,3ø,4 WIRE — PHASE — AIC 65,000 RMS — NEMA 1

CONDUIT & WIRE	CRT#	BKR/P	ITEM DESCRIPTION	AMPS	A	B	C	AMPS	ITEM DESCRIPTION	BKR/P	CRT#	CONDUIT & WIRE
1 - 2 1/2"C w/ 4-250 KCMIL+2-#4(G)EA	1	225/3	PANEL A1	192	334			192	PANEL B1	200/3	2	1 - 2"C w/ 4-#3/0+1-#6(G)EA
	3			171		332		162			4	
	5			173			266	96			6	
2 - 2 1/2"C w/ 4-#4/0+1-#3(G)EA	7	400/3	PANEL A2	345	515			167	PANEL A4	225/3	8	1 - 3"C w/ 4-350 KCMIL+1-#4(G)EA
	9			336		503		167			10	
	11			320			480	159			12	
1 - 1 1/4"C w/ 4-#2+2-#6(G)EA	13	60/3	PANEL A3	29	141			112	PANEL C1	150/3	14	1 - 2 1/2"C w/ 4-250 KCMIL+2-#4(G)EA
	15			27		135		108			16	
	17			34			144	110			18	
2 - 2"C w/ 4-#3/0+1-#3(G)EA	19	225/3	PANEL D1	194	194			0			20	
	21			192		192		0			22	
	23			176			176	0			24	
1 - 1 1/4"C w/ 4-#4+2-#10(G)EA	25	60/3	EDP (AFTER SWITCH)	55	55			0			26	
	27			55		55		0			28	
	29			55			55	0			30	
3"C W/ PULL STRING TO PULL BOX	31	225/3	FUTURE BRIDGE BLDG	0	0			0			32	
	33			0		0		0			34	
	35			0			0	0			36	
	37			0	0			0			38	
	39			0		0		0	TVSS	30/3	40	
	41			0			0	0			42	
				TOTAL	1,238	1,238	1,131					

PANEL A4 225 MCB — ISOLATED GROUND BAR

SERVICE 120/208V,3ø,4 WIRE — PHASE — AIC 22,000 RMS — NEMA 3R

CONDUIT & WIRE	CRT#	BKR/P	ITEM DESCRIPTION	AMPS	A	B	C	AMPS	ITEM DESCRIPTION	BKR/P	CRT#	CONDUIT & WIRE
1 - 1 1/4"C w/ 4-#4 + 2-#10(G)EA	1	60/3	HP-1	35.0	70.0			35.0	HP-2	60/3	2	1 - 1 1/4"C w/ 4-#4 + 2-#10(G)EA
	3			35.0		70.0		35.0			4	
	5			35.0			70.0	35.0			6	
1 - 3/4"C w/ 4-#10 + 2-#10(G)EA	7	30/3	HP-3	34.0	37.0			17.0	HP-4	25/3	8	1 - 3/4"C w/ 4-#10 + 2-#10(G)EA
	9			34.0		37.0		17.0			10	
	11			34.0			37.0	17.0			12	
1 - 3/4"C w/ 4-#12 + 2-#12(G)EA	13	20/3	HP-5	20.0	40.0			20.0	HP-6	30/3	14	1 - 3/4"C w/ 4-#10 + 2-#10(G)EA
	15			20.0		40.0		20.0			16	
	17			20.0			40.0	20.0			18	
1 - 3/4"C w/ 4-#10 + 2-#10(G)EA	19	30/3	HP-7	20.0	20.0			0.0	SPACE		20	
	21			20.0		20.0		0.0	SPACE		22	
	23			20.0			20.0	0.0	SPACE		24	
	25		SPACE	0.0	0.0			0.0	SPARE	20/1	26	
	27		SPACE	0.0		0.0		0.0	SPARE	20/1	28	
	29		SPACE	0.0			1.5	1.5	RECEPTACLE	20/1	30	1 - 3/4"C w/ 2-#12 + 1-#12(G)EA
	31			0.0	0.0			0.0			32	
	33			0.0		0.0		0.0			34	
	35			0.0			0.0	0.0			36	
	37			0.0	0.0			0.0			38	
	39			0.0		0.0		0.0			40	
	41			0.0			0.0	0.0			42	
				TOTAL	167.0	167.0	159.5					

PANEL A1 225 MCB — ISOLATED GROUND BAR

SERVICE 120/208V,3ø,4 WIRE — PHASE — AIC 22,000 RMS — NEMA 1

CONDUIT & WIRE	CRT#	BKR/P	ITEM DESCRIPTION	AMPS	A	B	C	AMPS	ITEM DESCRIPTION	BKR/P	CRT#	CONDUIT & WIRE
1 - 3/4"C w/ 2-#10 + 1-#10(G)EA	1	20/1	INT. LIGHTS	10.0	20.0			10.0	INT. LIGHTS	20/1	2	b
1 - 3/4"C w/ 2-#12 + 1-#12(G)EA	3	20/1	INT. LIGHTS	10.0		19.0		9.0	INT. LIGHTS	20/1	4	1 - 3/4"C w/ 2-#12 + 1-#12(G)EA
1 - 3/4"C w/ 2-#12 + 1-#12(G)EA	5	20/1	INT. LIGHTS	8.5			16.5	8.0	INT. LIGHTS	20/1	6	1 - 3/4"C w/ 2-#12 + 1-#12(G)EA
	7	20/1	SPARE	0.0	0.0			0.0	SPARE	20/1	8	
1 - 3/4"C w/ 2-#12 + 1-#12(G)EA	9	20/1	RECEPTACLES	4.5		19.5		15.0	RECEPTACLES	20/1	10	1 - 3/4"C w/ 2-#8 + 1-#10(G)EA
E2.5 MOD. FURN. WIRE STANDARD	11	20/1	MODULAR FURNITURE	15.0			30.0	15.0	MODULAR FURNITURE	20/1	12	E2.5 MOD. FURN. WIRE STANDARD
E2.5 MOD. FURN. WIRE STANDARD	13	20/1	MODULAR FURNITURE	15.0	30.0			15.0	MODULAR FURNITURE	20/1	14	E2.5 MOD. FURN. WIRE STANDARD
E2.5 MOD. FURN. WIRE STANDARD	15	20/1	MODULAR FURNITURE	15.0		30.0		15.0	MODULAR FURNITURE	20/1	16	E2.5 MOD. FURN. WIRE STANDARD
E2.5 MOD. FURN. WIRE STANDARD	17	20/1	IG- MODULAR FURNITURE	15.0			30.0	15.0	IG-MODULAR FURNITURE	20/1	18	E2.5 MOD. FURN. WIRE STANDARD
1 - 3/4"C w/ 2-#8 + 1-#10(G)EA	19	20/1	RECEPTACLES	15.0	30.0			15.0	IG-RECEPTACLES	20/1	20	1 - 3/4"C w/ 2-#8 + 1-#10(G)EA
E2.5 MOD. FURN. WIRE STANDARD	21	20/1	MODULAR FURNITURE	15.0		30.0		15.0	MODULAR FURNITURE	20/1	22	E2.5 MOD. FURN. WIRE STANDARD
E2.5 MOD. FURN. WIRE STANDARD	23	20/1	MODULAR FURNITURE	15.0			30.0	15.0	MODULAR FURNITURE	20/1	24	E2.5 MOD. FURN. WIRE STANDARD
E2.5 MOD. FURN. WIRE STANDARD	25	20/1	MODULAR FURNITURE	15.0	30.0			15.0	MODULAR FURNITURE	20/1	26	E2.5 MOD. FURN. WIRE STANDARD
E2.5 MOD. FURN. WIRE STANDARD	27	20/1	IG-MODULAR FURNITURE	15.0		30.0		15.0	IG-MODULAR FURNITURE	20/1	28	E2.5 MOD. FURN. WIRE STANDARD
E2.5 MOD. FURN. WIRE STANDARD	29	20/1	MODULAR FURNITURE	15.0			30.0	15.0	MODULAR FURNITURE	20/1	30	E2.5 MOD. FURN. WIRE STANDARD
E2.5 MOD. FURN. WIRE STANDARD	31	20/1	MODULAR FURNITURE	15.0	30.0			15.0	MODULAR FURNITURE	20/1	32	E2.5 MOD. FURN. WIRE STANDARD
E2.5 MOD. FURN. WIRE STANDARD	33	20/1	MODULAR FURNITURE	15.0		30.0		15.0	MODULAR FURNITURE	20/1	34	E2.5 MOD. FURN. WIRE STANDARD
E2.5 MOD. FURN. WIRE STANDARD	35	20/1	IG- MODULAR FURNITURE	15.0			30.0	15.0	IG-MODULAR FURNITURE	20/1	36	E2.5 MOD. FURN. WIRE STANDARD
1 - 3/4"C w/ 2-#12 + 2-#12(G)EA	37	20/1	IG-RECEPTACLES	8.0	12.0			8.0	RECEPTACLES	20/1	38	1 - 3/4"C w/ 2-#12 + 1-#12(G)EA
1 - 3/4"C w/ 2-#12 + 2-#12(G)EA	39	20/1	IG-RECEPTACLES	8.0		12.0		8.0	RECEPTACLES	20/1	40	1 - 3/4"C w/ 2-#12 + 1-#12(G)EA
1 - 3/4"C w/ 2-#12 + 2-#12(G)EA	41	20/1	IG-RECEPTACLES	8.0			12.0	8.0	RECEPTACLES	20/1	42	1 - 3/4"C w/ 2-#12 + 1-#12(G)EA
				TOTAL	162.0	170.5	172.5					

PANEL B1 200 MLO

SERVICE 120/208V,3ø,4 WIRE — PHASE — AIC 22,000 RMS — NEMA 1

CONDUIT & WIRE	CRT#	BKR/P	ITEM DESCRIPTION	AMPS	A	B	C	AMPS	ITEM DESCRIPTION	BKR/P	CRT#	CONDUIT & WIRE
1 - 3/4"C w/ 2-#12 + 1-#12(G)EA	1	20/1	INT. LIGHTS	9.0	19.0			10.0	INT. LIGHTS	20/1	2	1 - 3/4"C w/ 2-#12 + 1-#12(G)EA
1 - 3/4"C w/ 2-#12 + 1-#12(G)EA	3	20/1	INT. LIGHTS	10.0		14.0		4.0	INT. LIGHTS	20/1	4	1 - 3/4"C w/ 2-#12 + 1-#12(G)EA
1 - 3/4"C w/ 2-#12 + 1-#12(G)EA	5	20/1	INT. LIGHTS	7.5			7.5	0.0	SPARE	20/1	6	
1 - 3/4"C w/ 3-#12 + 1-#12(G)EA	7	20/2	ICE MAKER	20.0	70.0			50.0	WELDER	60/2	8	1 - 3/4"C w/ 3-#6 + 1-#10(G)EA
	9			20.0		70.0		50.0			10	
1 - 3/4"C w/ 2-#12 + 1-#12(G)EA	11	20/1	RECEPTACLE	1.5			6.0	4.5	RECEPTACLE	20/1	12	1 - 3/4"C w/ 2-#12 + 1-#12(G)EA
1 - 3/4"C w/ 2-#12 + 1-#12(G)EA	13	20/1	RECEPTACLE	1.5	1.5			0.0	SPARE	20/1	14	
1 - 3/4"C w/ 2-#12 + 1-#12(G)EA	15	20/1	RECEPTACLE	4.5		7.5		3.0	RECEPTACLE	20/1	16	1 - 3/4"C w/ 2-#12 + 1-#12(G)EA
	17	20/1	SPARE	0.0			6.0	6.0	IRRIGATION CONTROLLER	20/1	18	1 - 3/4"C w/ 2-#12 + 1-#12(G)EA
1 - 3/4"C w/ 2-#12 + 1-#12(G)EA	19	20/1	RECEPTACLE	3.0	3.0			0.0	SPARE	20/1	20	
1 - 3/4"C w/ 2-#12 + 1-#12(G)EA	21	20/1	GEN SET HEATER	3.0		0.0		0.0	SPARE	20/1	22	
1 - 3/4"C w/ 2-#12 + 1-#12(G)EA	23	20/1	GEN SET CHARGER	2.0			6.5	4.5	RECEPTACLE	20/1	24	1 - 3/4"C w/ 2-#12 + 1-#12(G)EA
	25	20/1	SPARE	0.0	0.0			0.0	SPARE	20/1	26	
	27	20/1	SPARE	0.0		0.0		0.0	SPARE	20/1	28	
	29	20/1	SPARE	0.0			0.0	0.0	SPARE	20/1	30	
	31	20/1	SPARE	0.0	0.0			0.0	SPARE	20/1	32	
	33	20/1	SPARE	0.0		0.0		0.0	SPARE	20/1	34	
	35	20/1	SPARE	0.0			0.0	0.0	SPARE	20/1	36	
	37	20/1	SPARE	0.0	88.2			88.2	RANEL B2	100/3	38	1 - 1 1/2"C w/ 4-#1/0 + 1-#6(G)EA
	39	20/1	SPARE	0.0		65.3		65.3			40	
	41	20/1	SPARE	0.0			71.0	71.0			42	
				TOTAL	181.7	181.8	99.0					

PANEL A2 400 MLO — ISOLATED GROUND BAR

SERVICE 120/208V,3ø,4 WIRE — PHASE — AIC 22,000 RMS — NEMA 1

CONDUIT & WIRE	CRT#	BKR/P	ITEM DESCRIPTION	AMPS	A	B	C	AMPS	ITEM DESCRIPTION	BKR/P	CRT#	CONDUIT & WIRE
1 - 3/4"C w/ 2-#12 + 1-#12(G)EA	1	20/1	INT. LIGHTS	9.0	13.9			4.9	EF-1	20/1	2	1 - 3/4"C w/ 2-#12 + 1-#12(G)EA
1 - 3/4"C w/ 2-#12 + 1-#12(G)EA	3	20/1	INT. LIGHTS	1.0		7.0		6.0	INT. LIGHTS	20/1	4	1 - 3/4"C w/ 2-#12 + 1-#12(G)EA
1 - 3/4"C w/ 2-#12 + 1-#12(G)EA	5	20/1	EF-2	4.4			7.4	3.0	INT. LIGHTS	20/1	6	1 - 3/4"C w/ 2-#12 + 1-#12(G)EA
1 - 3/4"C w/ 3-#10 + 1-#10(G)EA	7	30/2	EWH-D2	21.6	21.6			0.0	SPARE	20/1	8	
	9			21.6		23.1		1.5	RECEPTACLE	20/1	10	1 - 3/4"C w/ 2-#12 + 1-#12(G)EA
1 - 3/4"C w/ 4-#10 + 1-#10(G)EA	11	30/2	EHW-B5	21.6			21.6	0.0	SPARE	20/1	12	
	13			21.6	21.6			0.0	SPARE	20/1	14	
E2.5 MOD. FURN. WIRE STANDARD	15	20/1	MODULAR FURNITURE	15.0		15.0		0.0	SPARE	20/1	16	
E2.5 MOD. FURN. WIRE STANDARD	17	20/1	MODULAR FURNITURE	15.0			15.0	0.0	SPARE	20/1	18	
E2.5 MOD. FURN. WIRE STANDARD	19	20/1	MODULAR FURNITURE	15.0	15.0			0.0	SPARE	20/1	20	
E2.5 MOD. FURN. WIRE STANDARD	21	20/1	IG-MODULAR FURNITURE	13.0		15.0		0.0	SPARE	20/1	22	
	23	20/1	SPARE	0.0			0.0	0.0	SPARE	20/1	24	
1 - 3/8"C w/ 4-#6 + 1-#10(G)EA	25	40/3	AHU-5	37.0	82.0			45.0	AHU-8	45/3	26	1 - 1"C w/ 4-#6 + 1-#10(G)EA
	27			37.0		82.0		45.0			28	
	29			37.0			82.0	45.0			30	
1 - 1"C w/ 4-#6 + 1-#10(G)EA	31	45/3	AHU-3	45.0	90.0			45.0	AHU-4	45/3	32	1 - 1"C w/ 4-#6 + 1-#10(G)EA
	33			45.0		90.0		45.0			34	
	35			45.0			90.0	45.0			36	
1 - 1 1/4"C w/ 4-#4 + 1-#10(G)EA	37	60/3	AHU-1	52.0	104.0			52.0	AHU-2	60/3	38	1 - 1 1/4"C w/ 4-#4 + 1-#10(G)EA
	39			52.0		104.0		52.0			40	
	41			52.0			104.0	52.0			42	
				TOTAL	348.1	339.1	320.0					

PANEL B2 80 MLO

SERVICE 120/208V,3ø,4 WIRE — PHASE — AIC 10,000 RMS — NEMA 1

CONDUIT & WIRE	CRT#	BKR/P	ITEM DESCRIPTION	AMPS	A	B	C	AMPS	ITEM DESCRIPTION	BKR/P	CRT#	CONDUIT & WIRE
1 - 3/4"C w/ 2-#12 + 1-#12(G)EA	1	20/1	EXT. LIGHTS	9.0	14.8			5.8	EXT. LIGHTS	20/1	2	1 - 3/4"C w/ 2-#12 + 1-#12(G)EA
1 - 3/4"C w/ 2-#10 + 1-#10(G)EA	3	20/1	EXT. LIGHTS	5.0		15.0		10.0	EXT. LIGHTS	20/1	4	1 - 3/4"C w/ 2-#12 + 1-#12(G)EA
	5	20/1	SPARE	0.0			6.8	6.8	EXT. LIGHTS	20/1	6	1 - 3/4"C w/ 2-#10 + 1-#10(G)EA
	7	20/1	SPARE	0.0	7.0			7.0	EXT. LIGHTS	20/1	8	1 - 3/4"C w/ 2-#12 + 1-#12(G)EA
	9	20/1	SPARE	0.0		0.0		0.0	SPARE	20/1	10	
1 - 1"C w/ 4-#6 + 1-#10(G)EA	11	50/3	AIR COMPRESSOR	26.3			29.3	4.0	HTR-2	20/1	12	1 - 3/4"C w/ 2-#12 + 1-#12(G)EA
	13			26.3	29.8			4.5	RECEPTACLES	20/1	14	1 - 3/4"C w/ 2-#12 + 1-#12(G)EA
	15			25.3		28.3		3.0	EF-7	20/1	16	1 - 3/4"C w/ 2-#12 + 1-#12(G)EA
1 - 3/4"C w/ 2-#12 + 1-#12(G)EA	17	20/1	RECEPTACLES	4.5			16.1	11.6	EF-3&5	20/1	18	1 - 3/4"C w/ 2-#12 + 1-#12(G)EA
1 - 3/4"C w/ 2-#12 + 1-#12(G)EA	19	20/1	EWD	5.0	16.8			11.8	EF-4&6	20/1	20	1 - 3/4"C w/ 2-#12 + 1-#12(G)EA
1 - 3/4"C w/ 2-#12 + 1-#12(G)EA	21	20/1	EF-W	13.8		25.8		12.0	HTR-1,3,4	20/1	22	1 - 3/4"C w/ 2-#12 + 1-#12(G)EA
1 - 3/4"C w/ 2-#12 + 1-#12(G)EA	23	20/1	EF-V	13.8			19.8	6.0	SHOP GAS MONITORING	20/1	24	1 - 3/4"C w/ 2-#12 + 1-#12(G)EA
1 - 3/4"C w/ 2-#6 + 1-#10(G)EA	25	20/2	SITE LIGHTING	16.2	20.0			3.8	GAS MONITOR ALARMS	20/1	26	1 - 3/4"C w/ 2-#12 + 1-#12(G)EA
	27			16.2		16.2		0.0	SPARE	20/1	28	
	29	20/1	SPARE	0.0			0.0	0.0	SPARE	20/1	30	
	31	20/1	SPARE	0.0	0.0			0.0	SPARE	20/1	32	
	33	20/1	SPARE	0.0		0.0		0.0	SPARE	20/1	34	
	35	20/1	SPARE	0.0			0.0	0.0	SPARE	20/1	36	
	37	20/1	SPARE	0.0	0.0			0.0	SPARE	20/1	38	
	39	20/1	SPARE	0.0		0.0		0.0	SPARE	20/1	40	
	41	20/1	SPARE	0.0			0.0	0.0	SPARE	20/1	42	
				TOTAL	58.2	65.3	71.0					

PANEL A3 60 MCB — ISOLATED GROUND BAR

SERVICE 120/208V,3ø,4 WIRE — PHASE — AIC 22,000 RMS — NEMA 1

CONDUIT & WIRE	CRT#	BKR/P	ITEM DESCRIPTION	AMPS	A	B	C	AMPS	ITEM DESCRIPTION	BKR/P	CRT#	CONDUIT & WIRE
1 - 3/4"C w/ 2-#12 + 1-#12(G)EA	1	20/1	RECEPTACLES	1.5	3.0			1.5	RECEPTACLES	20/1	2	1 - 3/4"C w/ 2-#12 + 1-#12(G)EA
1 - 3/4"C w/ 2-#12 + 1-#12(G)EA	3	20/1	RECEPTACLES	1.5		3.0		1.5	RECEPTACLES	20/1	4	1 - 3/4"C w/ 2-#12 + 1-#12(G)EA
1 - 3/4"C w/ 2-#12 + 1-#12(G)EA	5	20/1	RECEPTACLES	8.0			10.5	4.5	IG-RECEPTACLES	20/1	6	1 - 3/4"C w/ 2-#12 + 2-#12(G)EA
1 - 3/4"C w/ 2-#12 + 2-#12(G)EA	7	20/1	IG-RECEPTACLES	3.0	6.0			3.0	IG-RECEPTACLES	20/1	8	1 - 3/4"C w/ 2-#12 + 2-#12(G)EA
1 - 3/4"C w/ 2-#12 + 1-#12(G)EA	9	20/1	RECEPTACLES	3.0		4.5		1.5	IG-RECEPTACLES	20/1	10	1 - 3/4"C w/ 2-#12 + 2-#12(G)EA
1 - 3/4"C w/ 3-#12 + 1-#12(G)EA	11	20/1	DVD	6.0			9.0	4.5	RECEPTACLES	20/1	12	1 - 3/4"C w/ 2-#12 + 1-#12(G)EA
1 - 3/4"C w/ 2-#12 + 1-#12(G)EA	13	20/1	RECEPTACLES	3.0	6.0			3.0	IG-RECEPTACLES	20/1	14	1 - 3/4"C w/ 2-#12 + 2-#12(G)EA
1 - 3/4"C w/ 2-#12 + 2-#12(G)EA	15	20/1	IG-RECEPTACLES	4.5		9.0		4.5	IG-RECEPTACLES	20/1	16	1 - 3/4"C w/ 2-#12 + 2-#12(G)EA
1 - 3/4"C w/ 2-#12 + 2-#12(G)EA	17	20/1	IG-RECEPTACLES	4.5			7.5	3.0	RECEPTACLES	20/1	18	1 - 3/4"C w/ 2-#12 + 1-#12(G)EA
1 - 3/4"C w/ 2-#12 + 2-#12(G)EA	19	20/1	IG-RECEPTACLES	3.0	7.5			4.5	RECEPTACLES	20/1	20	1 - 3/4"C w/ 2-#12 + 1-#12(G)EA
1 - 3/4"C w/ 2-#12 + 1-#12(G)EA	21	20/1	RECEPTACLES	1.5		3.0		1.5	RECEPTACLES	20/1	22	1 - 3/4"C w/ 2-#12 + 1-#12(G)EA
1 - 3/4"C w/ 2-#12 + 1-#12(G)EA	23	20/1	RECEPTACLES	1.5			3.0	1.5	RECEPTACLES	20/1	24	1 - 3/4"C w/ 2-#12 + 1-#12(G)EA
1 - 3/4"C w/ 2-#12 + 1-#12(G)EA	25	20/1	RECEPTACLES	1.5	3.0			1.5	RECEPTACLES	20/1	26	1 - 3/4"C w/ 2-#12 + 1-#12(G)EA
1 - 3/4"C w/ 2-#12 + 1-#12(G)EA	27	20/1	RECEPTACLES	3.0		4.5		1.5	RECEPTACLES	20/1	28	1 - 3/4"C w/ 2-#12 + 1-#12(G)EA
	29	20/1	LC1001 REMOTE ALARM	2.0			3.5	1.5	IG-RECEPTACLES	20/1	30	1 - 3/4"C w/ 2-#12 + 2-#12(G)EA
	31	20/1	SPARE	0.0	3.0			3.0	RECEPTACLES	20/1	32	1 - 3/4"C w/ 2-#12 + 1-#12(G)EA
	33	20/1	SPARE	0.0		3.0		3.0	RECEPTACLES	20/1	34	1 - 3/4"C w/ 2-#12 + 1-#12(G)EA
	35	20/1	SPARE	0.0			0.0	0.0	SPARE	20/1	36	
	37	20/1	SPARE	0.0	0.0			0.0	SPARE	20/1	38	
	39	20/1	SPARE	0.0		0.0		0.0	SPARE	20/1	40	
	41	20/1	SPARE	0.0			0.0	0.0	SPARE	20/1	42	
				TOTAL	29.5	27.0	34.0					

ELECTRICAL PANEL BOARD SCHEDULES

NOTE: THIS DRAWING WAS CREATED FOR PRODUCTION ON 22" x 34" SHEET SIZE. DO NOT SCALE PRINTS.

Texas Department of Transportation
125 E. 11th Street
Austin, Texas 78701-2483
(512) 416-3048

Copyright © 2005 Texas Department of Transportation

STATE OF TEXAS — ROBERT B. RAY — 40152 — LICENSED PROFESSIONAL ENGINEER — 03/23/05

SOUTH TRAVIS AREA ENGINEER AND MAINTENANCE FACILITY
AUSTIN, TRAVIS COUNTY
AUSTIN DISTRICT 14

Revisions

Drawn by: CARL O. NIX, P.E.
Project No. 470400238
Date 03.23.2005
Sheet No.

E4.1
of X sheets

CADFILE: T:\MNTFM\D14\AUS\470400238\Acad\MEP\E4_1.dwg Plotted: Tue, Mar. 22, 2005 @ 2:21 PM By: CNIX

PANEL C1 150 MCB — ISOLATED GROUND

SERVICE 120/208V,3ø,4 WIRE — PHASE — AIC 22,000 RMS — NEMA 1

CONDUIT & WIRE	CRT#	BKR/P	ITEM DESCRIPTION	AMPS	A	B	C	AMPS	ITEM DESCRIPTION	BKR/P	CRT#	CONDUIT & WIRE
1 - 3/4"C w / 2-#12 + 1-#12(G)6A	1	20/1	INT. LIGHTS / EF-8	10.2	18.2			8.0	INT. LIGHTS	20/1	2	1 - 3/4"C w / 2-#12 + 1-#12(G)6A
1 - 3/4"C w / 2-#12 + 1-#12(G)6A	3	20/1	INT. LIGHTS	8.0		8.0		0.0	SPARE	20/1	4	
1 - 3/4"C w / 2-#12 + 1-#12(G)6A	5	20/1	IG- RECEPTACLES	1.5			3.0	1.5	RECEPTACLES	20/1	6	1 - 3/4"C w / 2-#12 + 1-#12(G)6A
1 - 3/4"C w / 2-#12 + 1-#12(G)6A	7	20/1	RECEPTACLES	3.0	6.0			3.0	RECEPTACLES	20/1	8	1 - 3/4"C w / 2-#12 + 1-#12(G)6A
1 - 3/4"C w / 2-#12 + 1-#12(G)6A	9	20/1	RECEPTACLES	1.5		4.5		3.0	RECEPTACLES	20/1	10	1 - 3/4"C w / 2-#12 + 1-#12(G)6A
1 - 3/4"C w / 2-#12 + 1-#12(G)6A	11	20/1	RECEPTACLES	4.5			7.5	3.0	RECEPTACLES	20/1	12	1 - 3/4"C w / 2-#12 + 1-#12(G)6A
1 - 3/4"C w / 2-#12 + 1-#12(G)6A	13	20/1	RECEPTACLES	3.0	7.5			4.5	RECEPTACLES	20/1	14	1 - 3/4"C w / 2-#12 + 1-#12(G)6A
	15	20/1	SPARE	0.0		0.0		0.0	SPARE	20/1	16	
	17	20/1	SPARE	0.0			0.0	0.0	SPARE	20/1	18	
	19	20/1	SPARE	0.0	0.0			0.0	SPARE	20/1	20	
	21	20/1	SPARE	0.0		0.0		0.0	SPARE	20/1	22	
	23	20/1	SPARE	0.0			0.0	0.0	SPARE	20/1	24	
	25	20/1	SPARE	0.0	78.7			78.7	PANEL C2	125/3	26	1 - 1 1/2"C w / 4-#1/0 + 1-#6(G)6A
	27	20/1	SPARE	0.0		94.0		94.0			28	
	29	20/1	SPARE	0.0			99.7	99.7			30	
	31			0.0	0.0			0.0			32	
	33			0.0		0.0		0.0			34	
	35			0.0			0.0	0.0			36	
	37			0.0	0.0			0.0			38	
	39			0.0		0.0		0.0			40	
	41			0.0			0.0	0.0			42	
			TOTAL	112.4	107.5	110.2						

PANEL C2 200 MLO

SERVICE 120/208V,3ø,4 WIRE — PHASE — AIC 10,000 RMS — NEMA 1

CONDUIT & WIRE	CRT#	BKR/P	ITEM DESCRIPTION	AMPS	A	B	C	AMPS	ITEM DESCRIPTION	BKR/P	CRT#	CONDUIT & WIRE
1 - 3/4"C w / 2-#12 + 1-#12(G)6A	1	20/1	EXT. LIGHTS	10.0	20.0			10.0	EXT. LIGHTS	20/1	2	1 - 3/4"C w / 2-#12 + 1-#12(G)6A
	3	20/1	SPARE	0.0		0.0		0.0	SPARE	20/1	4	
1 - 3/4"C w / 3-#12 + 1-#12(G)6A	5	20/2	EWH-12	7.3			8.7	1.5	RECEPTACLES	20/1	6	1 - 3/4"C w / 2-#12 + 1-#12(G)6A
	7			7.3	8.7			1.5	RECEPTACLES	20/1	8	1 - 3/4"C w / 2-#12 + 1-#12(G)6A
1 - 3/4"C w / 3-#6 + 1-#10(G)6A	9	50/2	IGNITION OVEN	40.0		40.0		3.0	RECEPTACLES	20/1	10	1 - 3/4"C w / 2-#12 + 1-#12(G)6A
	11			40.0			41.5	1.5	RECEPTACLES	20/1	12	1 - 3/4"C w / 2-#12 + 1-#12(G)6A
1 - 3/4"C w / 2-#12 + 1-#12(G)6A	13	20/1	RECEPTACLES	3.0	6.0			3.0	RECEPTACLES	20/1	14	1 - 3/4"C w / 2-#12 + 1-#12(G)6A
1 - 3/4"C w / 2-#12 + 1-#12(G)6A	15	20/1	RECEPTACLES	1.5		6.0		4.5	RECEPTACLES	20/1	16	1 - 3/4"C w / 2-#12 + 1-#12(G)6A
1 - 3/4"C w / 2-#12 + 1-#12(G)6A	17	20/1	RECEPTACLES	3.0			4.8	1.6	RECEPTACLES	20/1	18	1 - 3/4"C w / 2-#12 + 1-#12(G)6A
	19	20/1	SPARE	0.0	0.0			0.0	SPARE	20/1	20	
	21	20/1	SPARE	0.0		0.0		0.0	SPARE	20/1	22	
	23	20/1	SPARE	0.0			0.0	0.0	SPARE	20/1	24	
	25	20/1	SPARE	0.0	0.0			0.0	SPARE	20/1	26	
	27	20/1	SPARE	0.0		0.0		0.0	SPARE	20/1	28	
	29	20/1	SPARE	0.0			0.0	0.0	SPARE	20/1	30	
	31			0.0				0.0	SPACE		32	
	33			0.0		0.0		0.0	SPACE		34	
	35			0.0			0.0	0.0	SPACE		36	
	37			0.0	0.0			0.0	SPACE		38	
	39			0.0		0.0		0.0	SPACE		40	
	41			0.0			0.0	0.0	SPACE		42	
			TOTAL	79.7	94.0	99.7						

PANEL D1 225 MCB

SERVICE 120/208V,3ø,4 WIRE — PHASE — AIC 22,000 RMS — NEMA 1

CONDUIT & WIRE	CRT#	BKR/P	ITEM DESCRIPTION	AMPS	A	B	C	AMPS	ITEM DESCRIPTION	BKR/P	CRT#	CONDUIT & WIRE
1 - 3/4"C w / 2-#12 + 1-#12(G)6A	1	20/1	EXT. LIGHTS	10.5	21.0			10.5	EXT. LIGHTS	20/1	2	1 - 3/4"C w / 2-#12 + 1-#12(G)6A
1 - 3/4"C w / 2-#10 + 1-#10(G)6A	3	20/1	INT. LIGHTS	13.8		24.3		10.5	INT. LIGHTS	20/1	4	1 - 3/4"C w / 2-#12 + 1-#12(G)6A
1 - 3/4"C w / 2-#12 + 1-#12(G)6A	5	20/1	RECEPTACLES	1.5			4.5	3.0	RECEPTACLES	20/1	6	1 - 3/4"C w / 2-#12 + 1-#12(G)6A
1 - 3/4"C w / 2-#12 + 1-#12(G)6A	7	20/1	RECEPTACLES	3.0	6.0			3.0	RECEPTACLES	20/1	8	1 - 3/4"C w / 2-#12 + 1-#12(G)6A
1 - 3/4"C w / 2-#12 + 1-#12(G)6A	9	20/1	RECEPTACLES	3.0		7.5		4.5	RECEPTACLES	20/1	10	1 - 3/4"C w / 2-#12 + 1-#12(G)6A
1 - 3/4"C w / 2-#10 + 1-#10(G)6A	11	20/1	SITE LIGHTING	8.8			11.1	4.6	RECEPTACLES	20/1	12	1 - 3/4"C w / 2-#12 + 1-#12(G)6A
	13			8.8	8.8			0.0	SPARE	20/1	14	
3"C W/PULL STRING TO PULL BOX	15			90.0		160.0		70.0			16	3"C W/PULL STRING TO PULL BOX
	17	100/3	FUTURE ASPHALT TANK	90.0			160.0	70.0	FUTURE TRUCK WASH	60/3	18	
	19			90.0	160.0			70.0			20	
	21	20/1	SPARE	0.0		0.0		0.0	SPARE	20/1	22	
	23	20/1	SPARE	0.0			0.0	0.0	SPARE	20/1	24	
	25	20/1	SPARE	0.0	0.0			0.0	SPARE	20/1	26	
	27	20/1	SPARE	0.0		0.0		0.0	SPARE	20/1	28	
	29	20/1	SPARE	0.0			0.0	0.0	SPARE	20/1	30	
	31			0.0	0.0			0.0			32	
	33			0.0		0.0		0.0			34	
	35			0.0			0.0	0.0			36	
	37			0.0	0.0			0.0			38	
	39			0.0		0.0		0.0			40	
	41			0.0			0.0	0.0			42	
			TOTAL	193.6	191.5	175.8						

PANEL EDP 60 MCB — ISOLATED GROUND BAR

SERVICE 120/208V,3ø,4 WIRE — PHASE — AIC 22,000 RMS — NEMA 1

CONDUIT & WIRE	CRT#	BKR/P	ITEM DESCRIPTION	AMPS	A	B	C	AMPS	ITEM DESCRIPTION	BKR/P	CRT#	CONDUIT & WIRE
1 - 1 1/4"C w / 4-#2 + 2-#6(G)6A	1	50/3	PANEL AE	26.4	53.4			27.0	PANEL FE	40/3	2	1 - 1 1/4"C w / 4-#2 + 2-#6(G)6A
	3			32.7		57.7		25.0			4	
	5			49.5			54.5	14.0			6	
1 - 3/4"C w / 2-#12 + 1-#12(G)6A	7	20/1	RECEPTACLE	1.5	1.5			0.0	SPARE	20/1	8	
	9	20/1	SPARE	0.0		0.0		0.0	SPARE	20/1	10	
	11		SPACE	0.0			0.0	0.0	SPACE		12	
	13		SPACE	0.0	0.0			0.0	SPACE		14	
	15		SPACE	0.0		0.0		0.0	SPACE		16	
	17		SPACE	0.0			0.0	0.0	SPACE		18	
	19		SPACE	0.0	0.0			0.0	SPACE		20	
	21			0.0		0.0		0.0			22	
	23			0.0			0.0	0.0			24	
	25			0.0	0.0			0.0			26	
	27			0.0		0.0		0.0			28	
	29			0.0			0.0	0.0			30	
	31			0.0	0.0			0.0			32	
	33			0.0		0.0		0.0			34	
	35			0.0			0.0	0.0			36	
	37			0.0	0.0			0.0			38	
	39			0.0		0.0		0.0			40	
	41			0.0			0.0	0.0			42	
			TOTAL	54.9	57.7	54.5						

PANEL AE 50A MCB — ISOLATED GROUND BAR

SERVICE 120/208V,3ø,4 WIRE — PHASE — AIC 10,000 RMS — NEMA 1

CONDUIT & WIRE	CRT#	BKR/P	ITEM DESCRIPTION	AMPS	A	B	C	AMPS	ITEM DESCRIPTION	BKR/P	CRT#	CONDUIT & WIRE
1 - 3/4"C w / 2-#10 + 1-#10(G)6A	1	20/1	INT. LIGHTS	8.7	10.9			2.2	INT. LIGHTS	20/1	2	1 - 3/4"C w / 2-#12 + 1-#12(G)6A
1 - 3/4"C w / 2-#12 + 1-#12(G)6A	3	20/1	RADIO RM LIGHTS	6.7		0.7		0.0	SPARE	20/1	4	
1 - 3/4"C w / 2-#12 + 1-#12(G)6A	5	20/1	IG-RECEPTACLES	6.0			9.0	3.0	IG-RECEPTACLES	20/1	6	1 - 3/4"C w / 2-#12 + 1-#12(G)6A
1 - 3/4"C w / 2-#12 + 1-#12(G)6A	7	20/1	RECEPTACLES	1.5	4.5			3.0	IG-RECEPTACLES	20/1	8	1 - 3/4"C w / 2-#12 + 1-#12(G)6A
1 - 3/4"C w / 2-#12 + 1-#12(G)6A	9	20/1	REFRIGERATOR	10.0		13.0		3.0	RADIO RM. RECEPTACLES	20/1	10	1 - 3/4"C w / 2-#12 + 1-#12(G)6A
1 - 3/4"C w / 3-#10 + 1-#10(G)6A	11	20/1	RADIO RM. RECEPTACLES	1.3			12.5	11.0	CU-1	15/2	12	1 - 3/4"C w / 3-#12 + 1-#12(G)6A
	13	20/1	SPARE	0.0	11.0			11.0			14	
1 - 3/4"C w / 4-#8 + 1-#10(G)6A	15	20/2	WALL A/C RADIO ROOM	19.0		19.0		0.0	SPARE	20/1	16	
	17			19.0			19.0	0.0	SPARE	20/1	18	
	19	20/1	SPARE	0.0	0.0			0.0	SPARE	20/1	20	
	21	20/1	SPARE	0.0		0.0		0.0	SPARE	20/1	22	
	23	20/1	SPARE	0.0			0.0	0.0	SPARE	20/1	24	
	25			0.0	0.0			0.0			26	
	27			0.0		0.0		0.0			28	
	29			0.0			0.0	0.0			30	
	31			0.0	0.0			0.0			32	
	33			0.0		0.0		0.0			34	
	35			0.0			0.0	0.0			36	
	37			0.0	0.0			0.0			38	
	39			0.0		0.0		0.0			40	
	41			0.0			0.0	0.0			42	
			TOTAL	26.4	32.7	40.5						

PANEL FE 40 MCB — ISOLATED GROUND BAR

SERVICE 120/208V,3ø,4 WIRE — PHASE — AIC 10,000 RMS — NEMA 1

CONDUIT & WIRE	CRT#	BKR/P	ITEM DESCRIPTION	AMPS	A	B	C	AMPS	ITEM DESCRIPTION	BKR/P	CRT#	CONDUIT & WIRE
1 - 3/4"C w / 3-#12 + 1-#12(G)6A	1	20/2	*DIESEL PUMP	8.5	8.5			2.0	*DIESEL DISPENSER	20/1	2	1 - 3/4"C w / 2-#12 + 1-#12(G)6A
	3			8.5		8.5		0.0	SWITCHED NEUTRAL		4	
	5		SWITCHED NEUTRAL	0.0			2.0	2.0	*GASOLINE DISPENSER	20/1	6	1 - 3/4"C w / 2-#12 + 1-#12(G)6A
1 - 3/4"C w / 3-#12 + 1-#12(G)6A	7	20/2	*GASOLINE PUMP	8.5	8.5			0.0	SWITCHED NEUTRAL		8	
	9			8.5		8.5		0.0	SPARE	20/1	10	
	11		SWITCHED NEUTRAL	0.0			10.0	10.0	TANK MONITOR CONSOLE	20/1	12	1 - 3/4"C w / 2-#12 + 1-#12(G)6A
1 - 3/4"C w / 3-#10 + 1-#10(G)6A	13	20/2	*LPG FUEL STATION	12.0	12.0			2.0	SHUNT TRIP GAS/DIESEL	20/1	14	1 - 3/4"C w / 2-#12 + 1-#12(G)6A
	15			12.0		12.0		2.0	SHUNT TRIP LPG	20/1	16	1 - 3/4"C w / 2-#12 + 1-#12(G)6A
	17		SWITCHED NEUTRAL	0.0			2.0	2.0	LC1002 REMOTE ALARM	20/1	18	1 - 3/4"C w / 2-#12 + 1-#12(G)6A
	19	20/1	SPARE	0.0	0.0			0.0	SPARE	20/1	20	
	21	20/1	SPARE	0.0		0.0		0.0	SPARE	20/1	22	
	23	20/1	SPARE	0.0			0.0	0.0	SPARE	20/1	24	
	25	20/1	SPARE	0.0	0.0			0.0	TV50	30/3	26	
	27	20/1	SPARE	0.0		0.0		0.0			28	
	29	20/1	SPARE	0.0			0.0	0.0			30	
	31			0.0	0.0			0.0			32	
	33			0.0		0.0		0.0			34	
	35			0.0			0.0	0.0			36	
	37			0.0	0.0			0.0			38	
	39			0.0		0.0		0.0			40	
	41			0.0			0.0	0.0			42	
			TOTAL	27.0	25.0	14.0						

*CIRCUIT BREAKER SHALL BE SHUNT TRIP TYPE W/ SWITCHED NEUTRAL

ELECTRICAL PANEL BOARD SCHEDULES

NOTE: THIS DRAWING WAS CREATED FOR PRODUCTION ON 22" x 34" SHEET SIZE. DO NOT SCALE PRINTS.

Texas Department of Transportation
125 E. 11th Street
Austin, Texas 78701-2483
(512) 416-3048

Copyright © 2005 Texas Department of Transportation

STATE OF TEXAS — ROBERT S. RAY — 40152 — LICENSED PROFESSIONAL ENGINEER — 3/23/05

SOUTH TRAVIS AREA ENGINEER AND MAINTENANCE FACILITY

AUSTIN, TRAVIS COUNTY
AUSTIN DISTRICT 14

Revisions

Drawn by:
CARL O. NIX, P.E.
Project No.
470400238
Date
03.23.2005
Sheet No.

E4.2
of X sheets

CADFILE: T:\MNTFMD14\US470400238\Cad\MEP\E4_2.dwg Plotted: Tue, Mar. 22, 2005 @ 2:20 PM By: CNIX

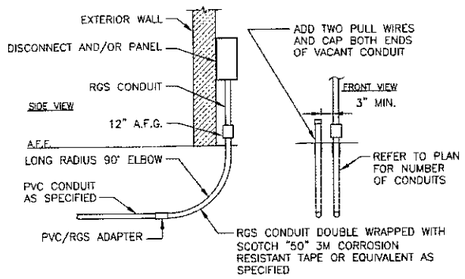

1 STUB UP TO SAFETY SWITCH AND/OR PANEL
SCALE: NOT TO SCALE

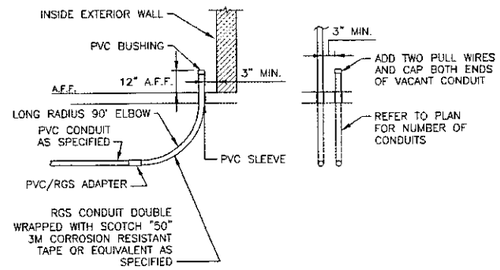

2 VOICE DATA STUB UP DETAIL
SCALE: NOT TO SCALE

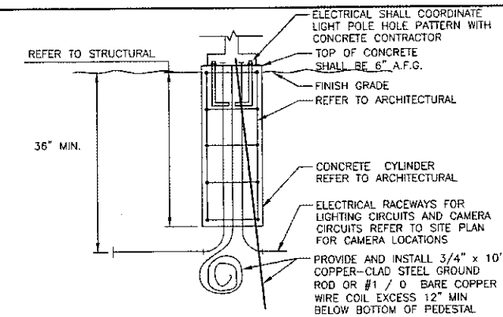

3 LIGHT STANDARD PEDESTAL
SCALE: NOT TO SCALE

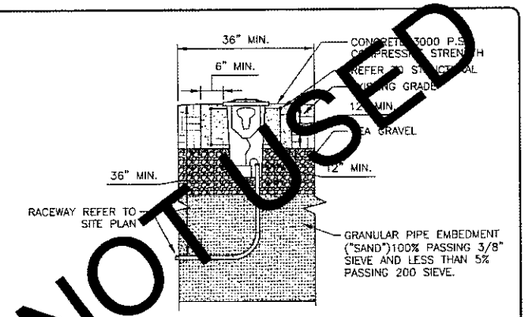

NOT USED

4 EXTERIOR IN-GRADE LIGHT FIXTURE
SCALE: NOT TO SCALE

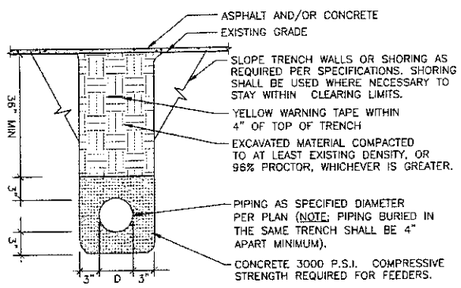

5 ELECTRICAL PAVED AREAS TYPICAL
SCALE: NOT TO SCALE

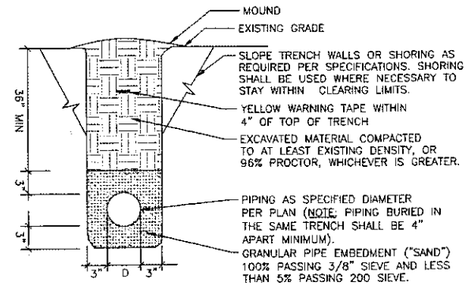

6 ELECTRICAL UNPAVED AREAS TYPICAL
SCALE: NOT TO SCALE

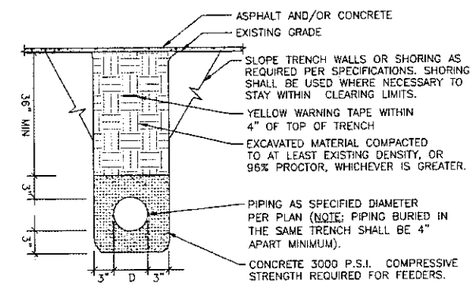

7 VOICE DATA PAVED AREAS TYPICAL
SCALE: NOT TO SCALE

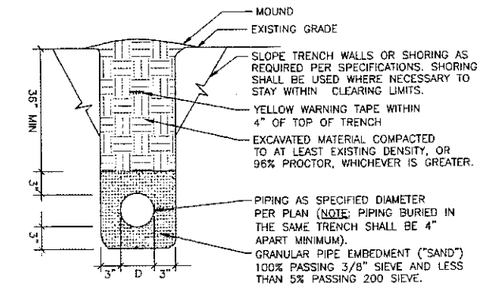

8 VOICE DATA UNPAVED AREAS TYPICAL
SCALE: NOT TO SCALE

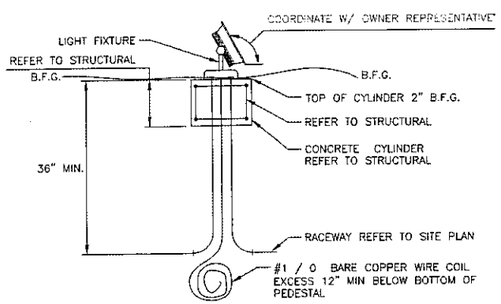

9 SIGN LIGHT PEDESTAL
SCALE: NOT TO SCALE

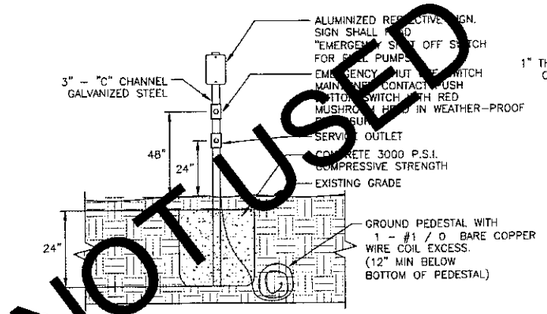

NOT USED

10 EMERGENCY SHUT OFF SWITCH PEDESTAL
SCALE: NOT TO SCALE

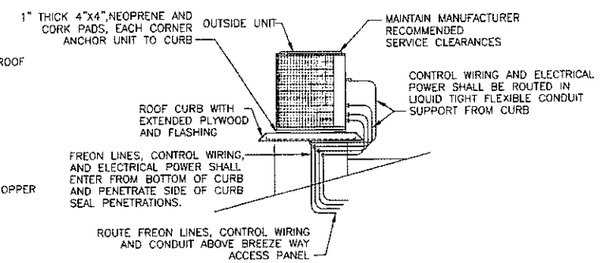

11 OUTSIDE UNIT ROOF CURB
SCALE: NOT TO SCALE

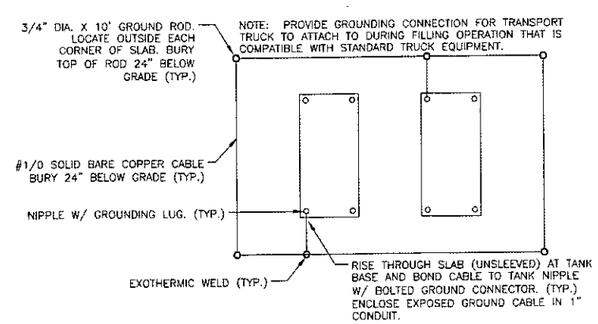

12 TANK GROUNDING SYSTEM
SCALE: NOT TO SCALE

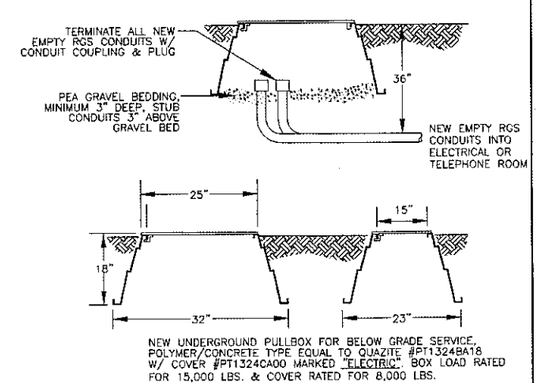

NEW UNDERGROUND PULLBOX FOR BELOW GRADE SERVICE. POLYMER/CONCRETE TYPE EQUAL TO QUAZITE #PT1324BA18 W/ COVER #PT1324CA00 MARKED "ELECTRIC". BOX LOAD RATED FOR 15,000 LBS. & COVER RATED FOR 8,000 LBS.

13 UNDERGROUND PULLBOX
SCALE: NOT TO SCALE

ELECTRICAL DETAILS

NOTE: THIS DRAWING WAS CREATED FOR PRODUCTION ON 22" x 34" SHEET SIZE. DO NOT SCALE PRINTS.

Texas Department of Transportation
125 E. 11th Street
Austin, Texas 78701-2483
(512) 416-3048
Copyright © 2005 Texas Department of Transportation

STATE OF TEXAS
ROBERT S. RAY
40152
LICENSED
PROFESSIONAL ENGINEER
3/23/05

SOUTH TRAVIS AREA ENGINEER AND MAINTENANCE FACILITY
AUSTIN, TRAVIS COUNTY
AUSTIN DISTRICT 14

Revisions

Drawn by:
CARL O. NIX, P.E.
Project No.
470400238
Date
03.23.2005
Sheet No.
E5.1
of X sheets

CADFILE: T:\MNTFM\D14\US\470400238\Acad\MEPES_1_TO_EDV.dwg Plotted: Wed, Mar. 23, 2005 @ 10:50 AM By: CNIX

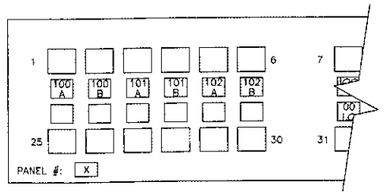

1 CAT5 PATCH PANEL LABELING
SCALE: NOT TO SCALE

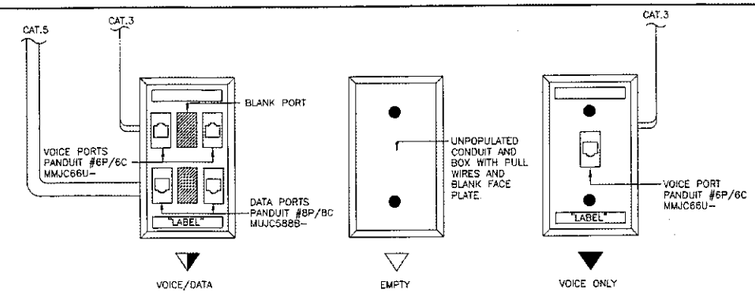

2 VOICE DATA OUTLET CONFIGURATION
SCALE: NOT TO SCALE

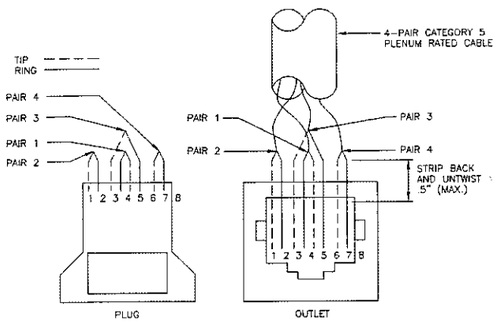

PAIR	COLOR
1	WHITE/BLUE
2	WHITE/ORANGE
3	WHITE/GREEN
4	WHITE/BROWN
5	WHITE/SLATE
6	RED/BLUE
7	RED/ORANGE
8	RED/GREEN
9	RED/BROWN
10	RED/SLATE
11	BLACK/BLUE
12	BLACK/ORANGE
13	BLACK/GREEN
14	BLACK/BROWN
15	BLACK/SLATE
16	YELLOW/BLUE
17	YELLOW/ORANGE
18	YELLOW/GREEN
19	YELLOW/BROWN
20	YELLOW/SLATE
21	VIOLET/BLUE
22	VIOLET/ORANGE
23	VIOLET/GREEN
24	VIOLET/BROWN
25	VIOLET/SLATE

3 T568B CAT5 PIN ASSIGNMENTS & STANDARD TELEPHONE COLOR CODES
SCALE: NOT TO SCALE

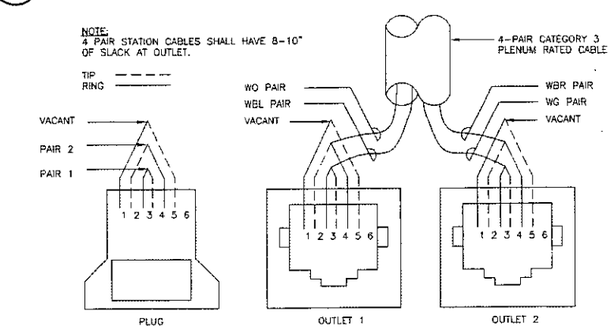

4 USOC CAT3 PIN ASSIGNMENTS
SCALE: NOT TO SCALE

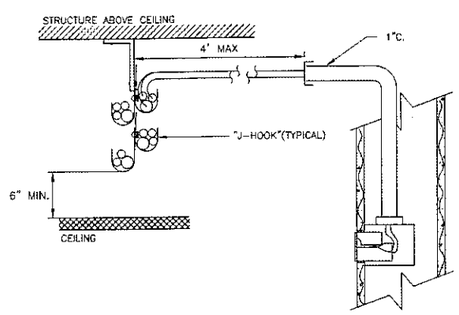

5 CONDUIT AND SUPPORT CABLE ROUTING
SCALE: NOT TO SCALE

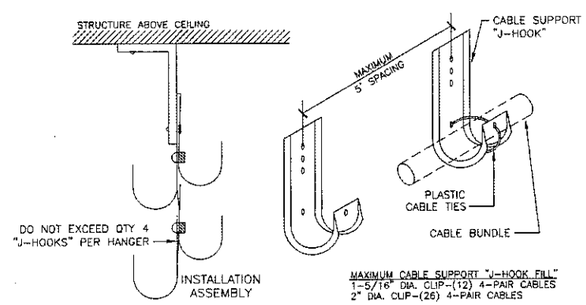

6 J-HOOK OPEN TOP CABLE SUPPORTS
SCALE: NOT TO SCALE

VOICE & DATA DETAILS

NOTE: THIS DRAWING WAS CREATED FOR PRODUCTION ON 22" x 34" SHEET SIZE. DO NOT SCALE PRINTS.

Texas Department of Transportation
125 E. 11th Street
Austin, Texas 78701-2483
(512) 416-3648

Copyright © 2005 Texas Department of Transportation

STATE OF TEXAS
ROBERT S. RAY
40152
LICENSED PROFESSIONAL ENGINEER

SOUTH TRAVIS AREA ENGINEER
AND MAINTENANCE FACILITY
AUSTIN, TRAVIS COUNTY
AUSTIN DISTRICT 14

Revisions

Drawn by:
CARL O. NIX, P.E.
Project No.
470400238
Date
03.23.2005
Sheet No.
EDV
of X sheets

CADFILE: T:\MNTFMCD14AUS\470400238\cadWEPES_1_TO_EDV.dwg Plotted: Wed, Mar. 23, 2005 @ 10:49 AM By: CNIX

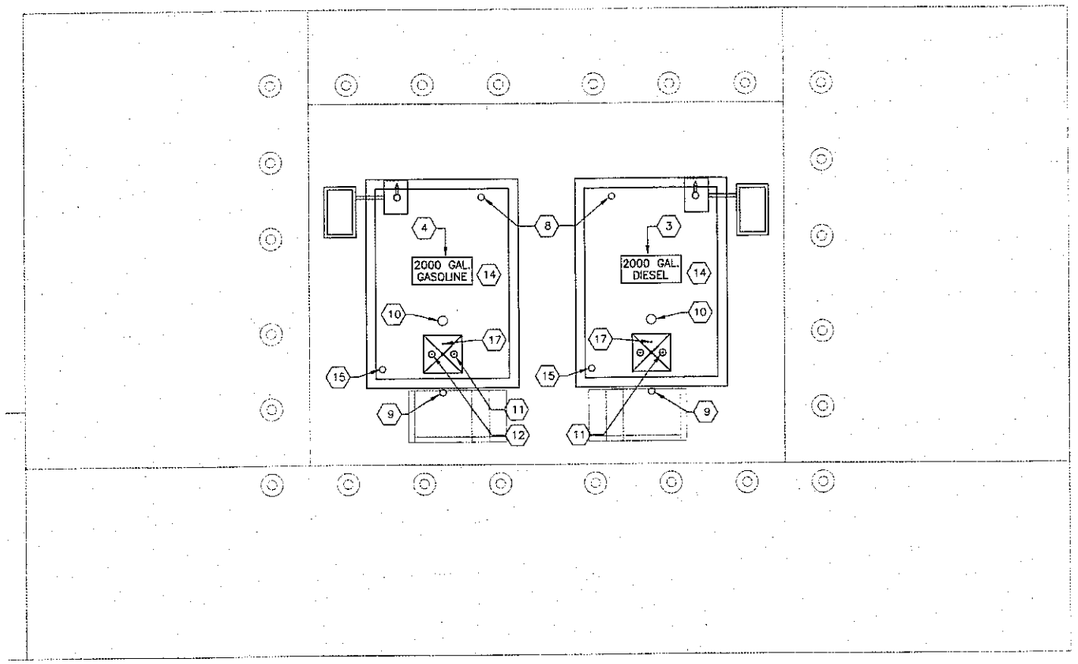

NORTH

1 FUEL STATION PLAN
SCALE: 1/4" = 1'-0"

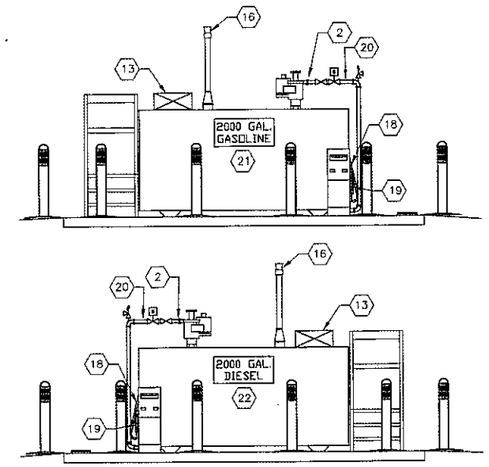

2 FUEL STATION ELEVATIONS
SCALE: 1/4" = 1'-0"

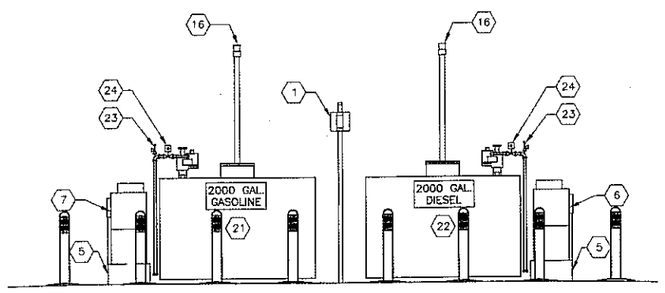

3 FUEL STATION ELEVATIONS
SCALE: 1/4" = 1'-0"

WARNING
NOTICE TO BIDDER

REFER TO SHEET FS2.1, E2.9.1 & PE1.1 FOR ADDITIONAL REQUIREMENTS.

FUEL STATION CONTRACTOR SHALL PROVIDE AND INSTALL THE TANKS, DISPENSERS, NOZZLES, PROBES, SENSORS AND LEAK DETECTION SYSTEMS COMPLETE WITH ALL CONDUIT, WIRE, JUNCTION BOXES, SEALS, CONTROLS, EPO, ETC. FOR A COMPLETE AND WORKING SYSTEM.

ELECTRICIAN SHALL PROVIDE AND INSTALL PANEL FE.

FUEL STATION NOTES

1. NOTE THAT CONSTRUCTION DRAWINGS ARE DIAGRAMMATIC BY THEIR NATURE, AND ARE NOT INTENDED TO SHOW EVERY CONNECTION IN DETAIL OR EVERY VENT PIPE, TANK PENETRATION OR DEVICE IN ITS EXACT LOCATION. FEATURES AND COMPONENTS NOT SHOWN ARE SUBJECT TO THE REQUIREMENTS OF STANDARDS REFERENCED ELSEWHERE IN THE CONSTRUCTION DOCUMENTS. THE CONTRACTOR SHALL COORDINATE THE VARIOUS TRADES IN ORDER TO AVOID INTERFERENCE BETWEEN DEVICES IT IS THE CONTRACTORS RESPONSIBILITY TO ENSURE A COMPLETE WORKING SYSTEM WHICH SHALL COMPLY WITH NFPA 30, NFPA 30A, AND NFPA 70, AND TEXAS COMMISSION ON ENVIRONMENTAL QUALITY, (TCEQ) FOR ABOVEGROUND STORAGE TANKS. IT IS THE CONTRACTORS RESPONSIBILITY TO OBTAIN REGISTRATION FROM TCEQ AND COMPLY AS SPECIFIED, TO ANY REQUIREMENTS SET FORTH.

2. DESIGN IS BASED ON 'SUPERVAULT RECTANGULAR MH SERIES'. THE TANK SHALL BE A DOUBLE WALL TYPE AND HAVE A 2-HOUR FIRE RATING. THE TANK SHALL BE LISTED AND LABELED BY UL-2085. A SAMPLE COPY OF THE TANK'S LABEL AND CERTIFICATION MUST BE INCLUDED WITH THE SUBMITTALS, OR APPROVED EQUAL.

3. FUEL STATION CONTRACTOR SHALL PROVIDE AND INSTALL REQUIREMENTS SHOWN ON SHEET E2.9.1 IN ADDITION TO THIS SHEET REQUIREMENT.

4. CONTRACTOR SHALL FOLLOW THE MANUFACTURER'S RECOMMENDATIONS FOR INSTALLATION REQUIREMENTS. IT IS THE CONTRACTORS RESPONSIBILITY TO INSTALL AND PROVIDE A FULLY FUNCTIONAL SYSTEM INCLUDING ALL THE NECESSARY FITTINGS AND HARDWARE SENSORS, PROBES, TANK LEVEL MONITORING AND LEAK SENSING SYSTEM, RISERS, RISER CAPS AND ATTACHMENTS FOR A COMPLETE FUNCTIONING SYSTEM.

5. ALL PIPING SHALL BE BLACK PIPE MEETING ASTM A-106 STANDARDS. CONTRACTOR SHALL PAINT ALL PIPING WITH A RUST PROHIBITIVE ENAMEL. THE COLOR SHALL BE FIRE ENGINE RED.

6. FUEL STATION CONTRACTOR SHALL SUBMIT TO THE OWNER A CERITIFICATION LETTER FROM THE TANK LEVEL MONITORING AND THE LEAK SENSING SYSTEM MANUFACTURER AND THE FUEL TANK MANUFACTURER STATING THE SYSTEM IS FUNCTIONING AND INSTALLED PROPERLY.

KEYED NOTE - ⬡

1. PROVIDE AND INSTALL 8FT A.F.F. SURFACE MOUNTED REMOTE AUDIBLE / VISIBLE ALARM ANNUNCIATOR BY PNEUMERCATOR MODEL#LC1002 AS SPECIFIED. REFER TO SHEET E2.9.1 FOR WIRING INSTRUCTIONS. TANK LEVEL MONITORING AND LEAK SENSING SYSTEM SHALL SEND AN AUDIBLE/VISIBLE ALARM AT THE FUEL ISLAND AND CONSOLE WHEN THE LIQUID LEVEL IN THE DIESEL AND/OR GASOLINE FUEL STORAGE TANK REACHES THE 90% STORAGE CAPACITY AND/OR UPON LEAK DETECTION.

2. PROVIDE AND INSTALL A 208V/1ø 3/4 HP SUBMERSIBLE PUMP. WITH STAINLESS UL LISTED FLEXIBLE CONNECTION.

3. PROVIDE AND INSTALL A 2,000 GALLON DIESEL VAULTED TANK BY SUPER VAULT MH SERIES OR EQUAL.

4. PROVIDE AND INSTALL 2,000 GALLON UNLEADED VAULTED TANK BY SUPER VAULT MH SERIES OR EQUAL.

5. PROVIDE AND INSTALL SHEAR VALVE, PIPING COUPLING FITTING AND "REMOTE DISPENSER BASE" BY STORAGE SOLUTIONS BRECKENRIDGE, TEXAS. BASE SHALL BE CAPABLE OF WITHSTANDING A FORCE GREATER THAN SHEAR VALVE, AS SPECIFIED.

6. PROVIDE AND INSTALL REMOTE DISPENSER BY GASBOY MODEL#9100 SERIES OR EQUAL. DESIGN FOR DISPENSING DIESEL.

7. PROVIDE AND INSTALL REMOTE DISPENSER BY GASBOY MODEL#9100 SERIES OR EQUAL. DESIGN FOR DISPENSING UNLEADED GASOLINE.

8. PROVIDE AND INSTALL TANK LEVEL RIGID MONITOR PROBE BY PNEUMERCATOR MODEL#MP450S IN 4" NIPPLE.

9. PROVIDE AND INSTALL 2" MONITOR TUBE INSTALL EXTERNAL LEAK SENSOR BY PNEUMERCATOR MODEL# LS600 LDBN.

10. PROVIDE AND INSTALL 6" PRIMARY EMERGENCY VENT.

11. PROVIDE INSTALLED 4" MECHANICAL SHUT OFF VALVE SET AT 95%.

12. PROVIDE AND INSTALL 4" NIPPLE CAP & SEAL AND MARK FOR FUTURE STAGE 1 VAPOR RECOVERY, (UNLEADED ONLY).

13. PROVIDE AND INSTALL 16 GALLON SPILL OVERFILL CONTAINMENT W/ 3/4" DRAIN BACK.

14. PROVIDE AND INSTALL CLOCK GAUGE W / BATTERY POWERED ALARM AND ARM BRACKET SET ALARM AT 90%.

15. PROVIDE AND INSTALL 4" SPARE NIPPLE & CAP.

16. PROVIDE AND INSTALL 2" VENT CAP AND RISER. VENT SHALL TERMINATE AT LEAST 12" ABOVE FINISHED FLOOR.

17. PROVIDE AND INSTALL A 2" STICK PORT WITH TWO TANK MEASURING STICKS.

18. PROVIDE AND INSTALL U.L. LISTED HOSE, HOSE SWIVEL, BREAKAWAY/WHIP HOSE, AUTOMATIC NOZZLE, HOSE RETRIEVER WITH CRADLE. PROVIDING A FULLY FUNCTIONAL SYSTEM.

19. PROVIDE AND INSTALL A PARTICULATE SPIN-OFF FILTER.

20. ALL PIPING, JOINTS, UNIONS AND FITTINGS SHALL BE BLACK PIPE MEETING ASTM A-106 STANDARDS.

21. INSTALL AND PROVIDE SIGNAGE ON TANK VISIBLE FROM 100FT TO READ THE FOLLOWING, " UNLEADED" , "NO SMOKING" , "FLAMMABLE", 2,000 GALLONS.

22. INSTALL AND PROVIDE SIGNAGE ON TANK VISIBLE FROM 100FT TO READ THE FOLLOWING, " DIESEL" , "NO SMOKING" , "COMBUSTIBLE", 2,000 GALLONS.

23. PROVIDE AND INSTALL A LINE PRESSURE RELIEF VALVE.

24. PROVIDE AND INSTALL A 2" SOLENOID VALVE.

FUEL STATION SCHEDULE & PLAN

Texas Department of Transportation
125 E. 11th Street
Austin, Texas 78701-2483
(512) 416-3048

Copyright © 2005 Texas Department of Transportation

STATE OF TEXAS
ROBERT S. RAY
40152
LICENSED PROFESSIONAL ENGINEER
3/23/05

SOUTH TRAVIS AREA ENGINEER AND MAINTENANCE FACILITY
AUSTIN, TRAVIS COUNTY
AUSTIN DISTRICT 14

Revisions
1
2
3
4

Drawn by:
CARL O. NIX, P.E.
Project No.
470400238
Date
03.23.2005
Sheet No.
FS2.1
of X sheets

NOTE: THIS DRAWING WAS CREATED FOR PRODUCTION 22Nx 34" SHEET SIZE. DO NOT SCALE PRINTS.

CADFILE: T:\MNTFMD14AUS\470400238\Acad\NEPE2_9_1_FS2_1.DWG Plotted: Wed, Mar. 23, 2005 @ 11:30 AM By: CNIX

ATTACHMENT N
Prototypical Maintenance Facility Construction Documents (Standards)

ATTACHMENT O
ITEM 506 Temporary Erosion Control

ITEM 506

TEMPORARY EROSION, SEDIMENTATION, AND ENVIRONMENTAL CONTROLS

506.1. Description. Install, maintain, and remove erosion, sedimentation, and environmental control devices. Remove accumulated sediment and debris.

506.2. Materials.

A. Rock Filter Dams.

1. **Aggregate.** Furnish aggregate with hardness, durability, cleanliness, and resistance to crumbling, flaking, and eroding acceptable to the Engineer. Provide the following:
   - **Types 1, 2, and 4 Rock Filter Dams.** Use 3 to 6 in. aggregate.
   - **Type 3 Rock Filter Dams.** Use 4 to 8 in. aggregate.
2. **Wire.** Provide minimum 20 gauge galvanized wire for the steel wire mesh and tie wires for Types 2 and 3 rock filter dams. Type 4 dams require:
   - a double-twisted, hexagonal weave with a nominal mesh opening of 2-1/2 in. x 3-1/4 in.;
   - minimum 0.0866 in. steel wire for netting;
   - minimum 0.1063 in. steel wire for selvages and corners; and minimum 0.0866 in. for binding or tie wire.
3. **Sandbag Material.** Furnish sandbags meeting Section 506.2.I, "Sandbags," except that any gradation of aggregate may be used to fill the sandbags.

B. Temporary Pipe Slope Drains. Provide corrugated metal pipe, polyvinyl chloride (PVC) pipe, flexible tubing, watertight connection bands, grommet materials, prefabricated fittings, and flared entrance sections that conform to the plans. Recycled and other materials meeting these requirements are allowed if approved.

Furnish concrete in accordance with Item 432, "Riprap."

C. Baled Hay. Provide hay bales weighing at least 50 lb., composed entirely of vegetable matter, measuring 30 in. or longer, and bound with wire, nylon, or polypropylene string.

D. Temporary Paved Flumes. Furnish asphalt concrete, hydraulic cement concrete, or other comparable non-erodible material that conforms to the plans. Provide rock or rubble with a minimum diameter of 6 in. and a maximum volume of 1/2 cu. ft. for the construction of energy dissipaters.

E. Construction Exits. Provide materials that meet the details shown on the plans and this Section.

1. **Rock Construction Exit.** Provide crushed aggregate for long and short-term construction exits. Furnish aggregates that are clean, hard, durable, and free from adherent coatings such as salt, alkali, dirt, clay, loam, shale, soft, or flaky materials and organic and injurious matter. Use 4- to 8-in. aggregate for Type 1 and 2- to 4-in. aggregate for Type 3.
2. **Timber Construction Exit.** Furnish No. 2 quality or better railroad ties and timbers for long-term construction exits, free of large and loose knots and treated to control rot. Fasten timbers with nuts and bolts or lag bolts, of at least 1/2 in. diameter, unless otherwise shown on the plans or allowed. For short-term exits, provide plywood or pressed wafer board at least 1/2 in. thick.
3. **Foundation Course.** Provide a foundation course consisting of flexible base, bituminous concrete, hydraulic cement concrete, or other materials as shown on the plans or directed.

F. Embankment for Erosion Control. Provide rock, loam, clay, topsoil, or other earth materials that will form a stable embankment to meet the intended use.

G. Pipe. Provide pipe outlet material in accordance with Item 556, "Pipe Underdrains," and details shown on the plans.

H. Construction Perimeter Fence.

1. **Posts.** Provide essentially straight wood or steel posts that are at least 60 in. long. Furnish soft wood posts with a minimum diameter of 3 in. or use 2 x 4 boards. Furnish hardwood posts with a minimum cross-section of 1-1/2 x 1-1/5 in. Furnish T- or L-shaped steel posts with a minimum weight of 1.3 lb. per foot.
2. **Fence.** Provide orange construction fencing as approved by the Engineer.
3. **Fence Wire.** Provide 12-1/2 gauge or larger galvanized smooth or twisted wire. Provide16 gauge or larger tie wire.
4. **Flagging.** Provide brightly-colored flagging that is fade-resistant and at least 3/4 in. wide to provide maximum visibility both day and night.
5. **Staples.** Provide staples with a crown at least 1/2 in. wide and legs at least 1/2 in. long.
6. **Used Materials.** Previously used materials meeting the applicable requirements may be used if accepted by the Engineer.

I. Sandbags. Provide sandbag material of polypropylene, polyethylene, or polyamide woven fabric with a minimum unit weight of 4 oz. per square yard, a Mullen burst-strength exceeding 300 psi, and an ultraviolet stability exceeding 70%.

Use natural coarse sand or manufactured sand meeting the gradation given in Table 1 to fill sandbags. Filled sandbags must be 24 to 30 in. long, 16 to 18 in. wide, and 6 to 8 in. thick.

Table 1
Sand Gradation

Sieve #	Maximum Retained (% by Weight)
4	3%
100	80%
200	95%

J. Temporary Sediment Control Fence. Provide a net-reinforced fence using woven geo-textile fabric. Logos visible to the traveling public will not be allowed.

1. **Fabric.** Provide fabric materials in accordance with DMS-6230, "Temporary Sediment Control Fence Fabric."
2. **Posts.** Provide essentially straight wood or steel posts with a minimum length of 48 in., unless otherwise shown on the plans. Soft wood posts must be at least 3 in. in diameter or nominal 2 x 4 in. Hardwood posts must have a minimum cross-section of 1-1/2 x 1-1/2 in. T- or L-shaped steel posts must have a minimum weight of 1.3 lb. per foot.
3. **Net Reinforcement.** Provide net reinforcement of at least 12-1/2 gauge galvanized welded wire mesh, with a maximum opening size of 2 x 4 in., at least 24 in. wide, unless otherwise shown on the plans.
4. **Staples.** Provide staples with a crown at least 3/4 in. wide and legs 1/2 in. long.
5. **Used Materials.** Use recycled material meeting the applicable requirements if accepted by the Engineer.

506.3. Equipment. Provide a backhoe, front end loader, blade, scraper, bulldozer, or other equipment as required when "Earthwork for Erosion Control" is specified on the plans as a bid item.

506.4. Construction.

A. Contractor Responsibilities. Implement the Department's Storm Water Pollution Prevention Plan (SWP3) for the project site in accordance with the specific or general storm water permit requirements. Develop and implement an SWP3 for project-specific material supply plants within and outside of the Department's right of way in accordance with the specific or general storm water permit requirements. Prevent water pollution from storm water associated with construction activity from entering any surface water or private property on or adjacent to the project site.

B. General.

1. **Phasing.** Implement control measures in the area to be disturbed before beginning construction, or as directed. Limit the disturbance to the area shown on the plans or as directed. If, in the opinion of the Engineer, the Contractor cannot control soil erosion and sedimentation resulting from construction operations, the Engineer will limit the disturbed area to that which the Contractor is able to control. Minimize disturbance to vegetation.
2. **Maintenance.** Immediately correct ineffective control measures. Implement additional controls as directed. Remove excavated material within the time requirements specified in the applicable storm water permit.
3. **Stabilization.** Stabilize disturbed areas where construction activities will be temporarily stopped in accordance with the applicable storm water permit. Establish a uniform vegetative cover. The project will not be accepted until a 70% density of existing adjacent undisturbed areas is obtained, unless otherwise shown on the plans. When shown on the plans, the Engineer may accept the project when adequate controls are in place that will control erosion, sedimentation, and water pollution until sufficient vegetative cover can be established.
4. **Finished Work.** Upon acceptance of vegetative cover, remove and dispose of all temporary control measures, temporary embankments, bridges, matting, falsework, piling, debris, or other obstructions placed during construction that are not a part of the finished work, or as directed.
5. **Restricted Activities.** Do not locate disposal areas, stockpiles, or haul roads in any wetland, water body, or streambed.

   Do not install temporary construction crossings in or across any water body without the prior approval of the appropriate resource agency and the Engineer. Restrict construction operations in any water body to the necessary areas as shown on the plans or applicable permit, or as directed. Use temporary bridges, timber mats, or other structurally sound and non-eroding material for stream crossings.

   Provide protected storage area for paints, chemicals, solvents, and fertilizers at an approved location. Keep paints, chemicals, solvents, and fertilizers off bare ground and provide shelter for stored chemicals.

C. Installation, Maintenance, and Removal Work. Perform work in accordance with the specific or general storm water permit. Install and maintain the integrity of temporary erosion and sedimentation control devices to accumulate silt and debris until earthwork construction and permanent erosion control features are in place or the disturbed area has been adequately stabilized as determined by the Engineer. If a device ceases to function as intended, repair or replace the device or portions thereof as necessary. Remove sediment, debris, and litter. When approved, sediments may be disposed of within embankments, or in the right of way in areas where the material will not contribute to further siltation. Dispose of removed material in accordance with federal, state, and local regulations.

Remove devices upon approval or when directed. Upon removal, finish-grade and dress the area. Stabilize disturbed areas in accordance with the permit, and as shown on the plans or directed. The Contractor retains ownership of stockpiled material and must remove it from the project when new installations or replacements are no longer required.

1. **Rock Filter Dams for Erosion Control.** Remove trees, brush, stumps, and other objectionable material that may interfere with the construction of rock filter dams. Place sandbags as a foundation when required or at the Contractor's option.

   For Types 1, 2, 3, and 5, place the aggregate to the lines, height, and slopes specified, without undue voids. For Types 2 and 3, place the aggregate on the mesh and then fold the mesh at the upstream side over the aggregate and secure it to itself on the downstream side with wire ties, or hog rings, or as directed. Place rock filter dams perpendicular to the flow of the stream or channel unless otherwise directed. Construct filter dams according to the following criteria, unless otherwise shown on the plans:

a. **Type 1 (Non-reinforced).**

(1) **Height.** At least 18 in. measured vertically from existing ground to top of filter dam.

(2) **Top Width.** At least 2 ft.

(3) **Slopes.** At most 2:1.

b. **Type 2 (Reinforced).**

(1) **Height.** At least 18 in. measured vertically from existing ground to top of filter dam.

(2) **Top Width.** At least 2 ft.

(3) **Slopes.** At most 2:1.

c. **Type 3 (Reinforced).**

(1) **Height.** At least 36 in. measured vertically from existing ground to top of filter dam.

(2) **Top Width.** At least 2 ft.

(3) **Slopes.** At most 2:1.

d. **Type 4 (Sack Gabions).** Unfold sack gabions and smooth out kinks and bends. For vertical filling, connect the sides by lacing in a single loop–double loop pattern on 4- to 5-in. spacing. At one end, pull the end lacing rod until tight, wrap around the end, and twist 4 times. At the filling end, fill with stone, pull the rod tight, cut the wire with approximately 6 in. remaining, and twist wires 4 times.

For horizontal filling, place sack flat in a filling trough, fill with stone, and connect sides and secure ends as described above.

Lift and place without damaging the gabion. Shape sack gabions to existing contours.

e. **Type 5.** Provide rock filter dams as shown on the plans.

2. **Temporary Pipe Slope Drains.** Install pipe with a slope as shown on the plans or as directed. Construct embankment for the drainage system in 8-in. lifts to the required elevations. Hand-tamp the soil around and under the entrance section to the top of the embankment as shown on the plans or as directed. Form the top of the embankment or earth dike over the pipe slope drain at least 1 ft. higher than the top of the inlet pipe at all points. Secure the pipe with hold-downs or hold-down grommets spaced a maximum of 10 ft. on center. Construct the energy dissipators or sediment traps as shown on the plans or as directed. Construct the sediment trap using concrete or rubble riprap in accordance with Item 432, "Riprap," when designated on the plans.

3. **Baled Hay for Erosion and Sedimentation Control.** Install hay bales at locations shown on the plans by embedding in the soil at least 4 in. and, where possible, approximately 1/2 the height of the bale, or as directed. Fill gaps between bales with hay.

4. **Temporary Paved Flumes.** Construct paved flumes as shown on the plans or as directed. Provide excavation and embankment (including compaction of the subgrade) of material to the dimensions shown on the plans, unless otherwise indicated. Install a rock or rubble riprap energy dissipater, constructed from the materials specified above to a minimum depth of 9 in. at the flume outlet to the limits shown on the plans or as directed.

5. **Construction Exits.** When tracking conditions exist, prevent traffic from crossing or exiting the construction site or moving directly onto a public roadway, alley, sidewalk, parking area, or other right of way areas other than at the location of construction exits. Construct exits for either long or short-term use.

a. **Long-Term.** Place the exit over a foundation course, if necessary. Grade the foundation course or compacted subgrade to direct runoff from the construction exits to a sediment trap as shown on the plans or as directed. Construct exits with a width of at least 14 ft. for one-way and 20 ft. for two-way traffic for the full width of the exit, or as directed.

(1) **Type 1.** Construct to a depth of at least 8 in. using crushed aggregate as shown on the plans or as directed.

(2) **Type 2.** Construct using railroad ties and timbers as shown on the plans or as directed.

b. **Short-Term.**

(1) **Type 3.** Construct using crushed aggregate, plywood, or wafer board. This type of exit may be used for daily operations where long-term exits are not practical.

(2) **Type 4.** Construct as shown on the plans or as directed.

6. **Earthwork for Erosion Control.** Perform excavation and embankment operations to minimize erosion and to remove collected sediments from other erosion control devices.

a. **Excavation and Embankment for Erosion Control Features.** Place earth dikes, swales, or combinations of both along the low crown of daily lift placement, or as directed, to prevent runoff spillover. Place swales and dikes at other locations as shown on the plans or as directed to prevent runoff spillover or to divert runoff. Construct cuts with the low end blocked with undisturbed earth to prevent erosion of hillsides. Construct sediment traps at drainage structures in conjunction with other erosion control measures as shown on the plans or as directed.

Where required, create a sediment basin providing 3,600 cu. ft. of storage per acre drained, or equivalent control measures for drainage locations that serve an area with 10 or more disturbed acres at one time, not including offsite areas.

b. **Excavation of Sediment and Debris.** Remove sediment and debris when accumulation affects the performance of the devices, after a rain, and when directed.

7. **Construction Perimeter Fence.** Construct, align, and locate fencing as shown on the plans or as directed.

a. **Installation of Posts.** Embed posts 18 in. deep or adequately anchor in rock, with a spacing of 8 to 10 ft.

b. **Wire Attachment.** Attach the top wire to the posts at least 3 ft. from the ground. Attach the lower wire midway between the ground and the top wire.

c. **Flag Attachment.** Attach flagging to both wire strands midway between each post. Use flagging at least 18 in. long. Tie flagging to the wire using a square knot.

8. **Sandbags for Erosion Control.** Construct a berm or dam of sandbags that will intercept sediment-laden storm water runoff from disturbed areas, create a retention pond, detain sediment, and release water in sheet flow. Fill each bag with sand so that at least the top 6 in. of the bag is unfilled to allow for proper tying of the open end. Place the sandbags with their tied ends in the same direction. Offset subsequent rows of sandbags 1/2 the length of the preceding row. Place a single layer of sandbags downstream as a secondary debris trap. Place additional sandbags as necessary or as directed for supplementary support to berms or dams of sandbags or earth.

9. **Temporary Sediment-Control Fence.** Provide temporary sediment-control fence near the downstream perimeter of a disturbed area to intercept sediment from sheet flow. Incorporate the fence into erosion-control measures used to control sediment in areas of higher flow. Install the fence as shown on the plans, as specified in this Section, or as directed.

a. **Installation of Posts.** Embed posts at least 18 in. deep, or adequately anchor, if in rock, with a spacing of 6 to 8 ft. and install on a slight angle toward the run-off source.

b. **Fabric Anchoring.** Dig trenches along the uphill side of the fence to anchor 6 to 8 in. of fabric. Provide a minimum trench cross-section of 6 x 6 in. Place the fabric against the side of the trench and align approximately 2 in of fabric along the bottom in the upstream direction. Backfill the trench, then hand-tamp.

c. **Fabric and Net Reinforcement Attachment.** Unless otherwise shown under the plans, attach the reinforcement to wooden posts with staples, or to steel posts with T-clips, in at least 4 places equally spaced. Sewn vertical pockets may be used to attached reinforcement to end posts. Fasten the fabric to the top strand of reinforcement by hog rings or cord every 15 in. or less.

d. **Fabric and Net Splices.** Locate splices at a fence post with a minimum lap of 6 in. attached in at least 6 places equally spaced, unless otherwise shown under the plans. Do not locate splices in concentrated flow areas.

Requirements for installation of used temporary sediment-control fence include the following:

- fabric with minimal or no visible signs of biodegradation (weak fibers),
- fabric without excessive patching (more than 1 patch every 15 to 20 ft.),
- posts without bends, and
- backing without holes.

506.5. Measurement.

A. **Rock Filter Dams.** Installation or removal of rock filter dams will be measured by the foot or by the cubic yard. The measured volume will include sandbags, when used.

1. **Linear Measurement.** When rock filter dams are measured by the foot, measurement will be along the centerline of the top of the dam.
2. **Volume Measurement.** When rock filter dams are measured by the cubic yard, measurement will be based on the volume of rock computed by the method of average end areas.
   a. **Installation.** Measurement will be made in final position.
   b. **Removal.** Measurement will be made at the point of removal.

B. **Temporary Pipe Slope Drains.** Temporary pipe slope drains will be measured by the foot.

C. **Baled Hay.** Baled hay will be measured by each bale.

D. **Temporary Paved Flumes.** Temporary paved flumes will be measured by the square yard of surface area. The measured area will include the energy dissipater at the flume outlet.

E. **Construction Exits.** Construction exits will be measured by the square yard of surface area.

F. **Earthwork for Erosion Control.**

1. **Equipment.** Equipment use will be measured by the actual number of hours the equipment is operated.
2. **Volume Measurement.**
   a. **In Place.**
      (1) **Excavation.** Excavation will be measured by the cubic yard in its original position and the volume computed by the method of average end areas.
      (2) **Embankment.** Embankment will be measured by the cubic yard in its final position by the method of average end areas. The volume of embankment will be determined between:
         - the original ground surfaces or the surface upon that the embankment is to be constructed for the feature and
         - the lines, grades and slopes of the accepted embankment for the feature.
   b. **In Vehicles.** Excavation and embankment quantities will be combined and paid for under "Earthwork (Erosion and Sediment Control, In Vehicles)." Excavation will be measured by the cubic yard in vehicles at the point of removal. Embankment will be measured by the cubic yard in vehicles measured at the point of delivery. Shrinkage or swelling factors will not be considered in determining the calculated quantities.

G. **Construction Perimeter Fence.** Construction perimeter fence will be measured by the foot.

H. **Sandbags for Erosion Control.** Sandbags will be measured as each sandbag or by the foot along the top of sandbag berms or dams.

I. **Temporary Sediment-Control Fence.** Temporary sediment-control fence will be measured by the foot.

506.6. Payment. The following will not be paid for directly but are subsidiary to pertinent Items:

- erosion-control measures for Contractor project-specific locations (PSLs) inside and outside the right of way (such as construction and haul roads, field offices, equipment and supply areas, plants, and material sources);
- removal of litter;
- repair to devices and features damaged by Contractor operations;
- added measures and maintenance needed due to negligence, carelessness, lack of maintenance, and failure to install permanent controls;
- removal and reinstallation of devices and features needed for the convenience of the Contractor;
- finish grading and dressing upon removal of the device; and
- minor adjustments including but not limited to plumbing posts, reattaching fabric, minor grading to maintain slopes on an erosion embankment feature, or moving small numbers of sandbags.

The Contractor will be reimbursed in accordance with pertinent Items or Article 9.5, "Force Account," for maintenance, repair, or reinstallation of devices and features when the need for additional control measures cannot be attributed to the above, as determined by the Engineer. Stabilization of disturbed areas will be paid for under pertinent Items.

Furnishing and installing pipe for outfalls associated with sediment traps and ponds will not be paid for directly but is subsidiary to the excavation and embankment under this Item.

A. Rock Filter Dams. The work performed and materials furnished in accordance with this Item and measured as provided under "Measurement" will be paid for at the unit price bid as follows:

1. **Installation.** Installation will be paid for as "Rock Filter Dams (Install)" of the type specified. This price is full compensation for furnishing and operating equipment, finish backfill and grading, lacing, proper disposal, labor, materials, tools, and incidentals.
2. **Removal.** Removal will be paid for as "Rock Filter Dams (Remove)." This price is full compensation for furnishing and operating equipment, proper disposal, labor, materials, tools, and incidentals.

When the Engineer directs that the rock filter dam installation or portions thereof be replaced, payment will be made at the unit price bid for "Rock Filter Dams (Remove)" and for "Rock Filter Dams (Install)" of the type specified. This price is full compensation for furnishing and operating equipment, finish backfill and grading, lacing, proper disposal, labor, materials, tools, and incidentals

B. Temporary Pipe Slope Drains. The work performed and materials furnished in accordance with this Item and measured as provided under "Measurement" will be paid for at the unit price bid for "Temporary Pipe Slope Drains" of the size specified. This price is full compensation for furnishing materials, removal and disposal, furnishing and operating equipment, labor, tools, and incidentals.

Removal of temporary pipe slope drains will not be paid for directly but is subsidiary to the installation Item. When the Engineer directs that the pipe slope drain installation or portions thereof be replaced, payment will be made at the unit price bid for "Temporary Pipe Slope Drains" of the size specified, which is full compensation for the removal and reinstallation of the pipe drain.

Earthwork required for the pipe slope drain installation, including construction of the sediment trap, will be measured and paid for under Section 506.5.F, "Earthwork for Erosion and Sediment Control."

Riprap concrete or stone, when used as an energy dissipater or as a stabilized sediment trap, will be measured and paid for in accordance with Item 432, "Riprap."

C. Baled Hay. The work performed and materials furnished in accordance with this Item and measured as provided under "Measurement" will be paid for at the unit price bid for "Baled Hay." This price is full compensation for furnishing and placing bales, excavating trenches, removal and disposal, equipment, labor, tools, and incidentals.

When the Engineer directs that the baled hay installation (or portions thereof) be replaced, payment will be made at the unit price bid for "Baled Hay," which is full compensation for removal and reinstallation of the baled hay.

D. Temporary Paved Flumes. The work performed and materials furnished in accordance with this Item and measured as provided under "Measurement" will be paid for at the unit price bid for "Temporary

Paved Flume (Install)" or "Temporary Paved Flume (Remove)." This price is full compensation for furnishing and placing materials, removal and disposal, equipment, labor, tools, and incidentals.

When the Engineer directs that the paved flume installation or portions thereof be replaced, payment will be made at the unit prices bid for "Temporary Paved Flume (Remove)" and "Temporary Paved Flume (Install)." These prices are full compensation for the removal and replacement of the paved flume and for equipment, labor, tools, and incidentals.

Earthwork required for the paved flume installation, including construction of a sediment trap, will be measured and paid for under Section 506.5.F, "Earthwork for Erosion and Sediment Control."

E. Construction Exits. Contractor-required construction exits from off-right of way locations or on-right of way PSLs will not be paid for directly but are subsidiary to pertinent Items.

The work performed and materials furnished in accordance with this Item and measured as provided under "Measurement" for construction exits needed on right of way access to work areas required by the Department will be paid for at the unit price bid for "Construction Exits (Install)" of the type specified or "Construction Exits (Remove)." This price is full compensation for furnishing and placing materials, excavating, removal and disposal, cleaning vehicles, labor, tools, and incidentals.

When the Engineer directs that a construction exit or portion thereof be removed and replaced, payment will be made at the unit prices bid for "Construction Exit (Remove)" and "Construction Exit (Install)" of the type specified. These prices are full compensation for the removal and replacement of the construction exit and for equipment, labor, tools, and incidentals.

Construction of sediment traps used in conjunction with the construction exit will be measured and paid for under Section 506.5.F, "Earthwork for Erosion and Sediment Control."

F. Earthwork for Erosion and Sediment Control. The work performed and materials furnished in accordance with this Item and measured as provided under "Measurement" will be paid for at the unit price bid for "Excavation (Erosion and Sediment Control, In Place)," "Embankment (Erosion and Sediment Control, In Place)," "Earthwork (Erosion and Sediment Control, In Vehicles)," "Dragline Work (Erosion and Sediment Control)," "Backhoe Work (Erosion and Sediment Control)," "Excavator Work (Erosion and Sediment Control)," "Front End Loader Work (Erosion and Sediment Control)," "Blading Work (Erosion and Sediment Control)," "Scraper Work (Erosion and Sediment Control)," or "Bulldozer Work (Erosion and Sediment Control)."

This price is full compensation for excavation including removal of accumulated sediment in various erosion control installations as directed, hauling, and disposal of material not used elsewhere on the project; excavation for construction of erosion-control features; embankments including furnishing material from approved sources and construction of erosion-control features; sandbags; plywood; stage construction for curb inlets involved in curb-inlet sediment traps; and equipment, labor; tools, and incidentals.

Earthwork needed to remove and obliterate of erosion-control features will not be paid for directly but is subsidiary to pertinent Items unless otherwise shown on the plans.

Sprinkling and rolling required by this Item will not be paid for directly, but will be subsidiary to this Item.

G. Construction Perimeter Fence. The work performed and materials furnished in accordance with this Item and measured as provided under "Measurement" will be paid for at the unit price bid for "Construction Perimeter Fence." This price is full compensation for furnishing and placing the fence; digging, fence posts, wire, and flagging; removal and disposal; and materials, equipment, labor, tools, and incidentals.

Removal of construction perimeter fence will be not be paid for directly but is subsidiary to the installation Item. When the Engineer directs that the perimeter fence installation or portions thereof be removed and replaced, payment will be made at the unit price bid for "Construction Perimeter Fence," which is full compensation for the removal and reinstallation of the construction perimeter fence.

H. Sandbags for Erosion Control. Sandbags will be paid for at the unit price bid for "Sandbags for Erosion Control" (of the height specified when measurement is by the foot). This price is full compensation for materials, placing sandbags, removal and disposal, equipment, labor, tools, and incidentals.

Removal of sandbags will not be paid for directly but is subsidiary to the installation Item. When the Engineer directs that the sandbag installation or portions thereof be replaced, payment will be made at the unit price bid for "Sandbags for Erosion Control," which is full compensation for the reinstallation of the sandbags.

I. Temporary Sediment-Control Fence. The work performed and materials furnished in accordance with this Item and measured as provided under "Measurement" will be paid for at the unit price bid for "Temporary Sediment-Control Fence." This price is full compensation for furnishing and placing the fence; trenching, fence posts, fabric and backfill; removal and disposal; and equipment, labor, tools, and incidentals.

Removal of temporary sediment-control fence will not be paid for directly but is subsidiary to the installation Item. When the Engineer directs that the temporary sedimentation control fence installation or portions thereof be replaced, payment will be made at the unit price bid for "Temporary Sediment-Control Fence," which is full compensation for the removal and reinstallation of the temporary sediment-control fence.