COMPLIANT WORK ZONE TRAFFIC CONTROL DEVICE LIST

Traffic Operations Division

© by Texas Department of Transportation
all rights reserved

THIS PAGE
INTENTIONALLY
LEFT BLANK

TABLE OF CONTENTS

A. INTRODUCTION A-1

B. DEFINITIONS B-1

C. TYPE-I BARRICADES C-1
1. Folding Type-I Barricade Systems C-1
2. A-Frame Type-I Barricade Systems C-2
3. Skid-Mount Type-I Barricade Systems .. C-3

D. TYPE-III BARRICADES D-1
1. Type-III Barricades D-2
   a. Type-III Barricade Systems D-2
   b. Type-III Barricade Systems for road closures D-2
2. Type III Barricade Systems D-2
   a. Rails D-2
   b. Supports (Skid-Type) D-3
   c. Stiffeners D-4
   d. Mid-rail Stiffeners D-5
   e. Skids D-5
   f. Posts D-6
   g. Long-Term D-6

E. SPECIAL USE BARRICADES E-1
1. Direction Indicator Barricades E-1
2. Detectable Pedestrian Barricades E-1

F. VERTICAL PANELS F-1
1. Rigid Vertical Panels F-1
   a. Driveable Supports F-1
   b. Substrates F-1
   c. Portable F-2
2. Self-Righting Vertical Panels F-3

G. EDGELINE CHANNELIZERS G-1

H. CONES H-1
1. One-Piece Cones H-1
2. Two-Piece Cones H-1

I. PLASTIC DRUMS I-1
1. Plastic Drums I-1
2. Sign Substrates for Drum I-2

J. SIGNS & SIGN SUPPORTS J-1
1. Permanent J-1
2. Long-Term / Intermediate-Term J-1
   a. Portable J-1
   b. Post-Type J-5
   c. Wheeled (Removed) J-8
   d. Sign Substrates J-8
3. Short-Term / Short-Duration J-8
   a. Portable J-8
   b. Sign Substrates J-11

K. TEMPORARY MAILBOXES K-1

L. TRUCK-MOUNTED PROTECTIVE DEVICES L-1
1. Truck-Mounted Attenuators L-1
2. Truck-Mounted Barriers L-1

M. PORTABLE TRAFFIC SIGNALS M-1

N. GLARE SCREEN N-1

O. END TREATMENTS FOR CTB O-1

P. TRAFFIC BARRIERS P-1
1. Concrete Barriers P-1
2. Steel Barriers P-1
3. Water Filled Barriers P-1

Q. LONGITUDINAL CHANNELIZING DEVICES Q-1

R. TEMPORARY RUMBLES STRIPS R-1

S. APPENDIX A. PRODUCTS REMOVED FROM LIST S-1

T. APPENDIX B. FABRICATION DETAILS T-1
Type 2 PCTB Sign Support Assembly (1 of 4). .. T-2
..... -T-5

U. APPENDIX C. PRODUCT & INFORMATION SOURCES U-1

THIS PAGE
INTENTIONALLY
LEFT BLANK

A. INTRODUCTION

This list contains products that have been evaluated and determined to be acceptable traffic control devices for use in work zones. Devices on this list must, as a minimum, be considered to be compliant to the criteria stated in *NCHRP Report 350: Recommended Procedures for the Safety Evaluation of Highway Features* (NCHRP 350) and/or the *Manual for Assessing Safety Hardware* (MASH).

This list is intended to supplement and clarify the *Traffic Control Standard Sheets* (TCSS) by providing the most up-to-date information available. All devices shall comply with the current *Texas Manual on Uniform Traffic Control Devices* (TMUTCD).

Dimensions given in this document are nominal and are given merely for descriptive purposes.

Inclusion on this list does not imply that these products are eligible for permanent installation on state right-of-way. This list is not exhaustive; crashworthy products exist that are not included herein. TxDOT will consider products for inclusion if sufficient information is provided to make a decision. For a product to be evaluated for inclusion on this list, all related data such as an evaluation report prepared by an independent testing agency under the supervision of a registered professional engineer, video tape of crash test (if crash tested), compliance letter from the FHWA, etc. must be sent to the TxDOT Traffic Standards Engineer. **DO NOT** send originals; the documentation submitted shall not be returned. TxDOT reserves the right to review all documentation and may or may not accept the device for inclusion on this list. The fact that FHWA considers a device to be compliant with NCHRP 350 or MASH does not obligate TxDOT to include that device on this list. TxDOT reserves the right to remove products, with sufficient cause, at any time. If a product is rejected or removed, a letter notifying of the rejection or removal and stating the specific reasons will be sent to the listed product source(s). The product source(s) may address TxDOT's concerns that caused the rejection or removal of the product and resubmit it for TxDOT's further consideration.

The devices in each category are generally listed in alphabetical order by vendor. The order is not intended to indicate a particular device preference. TxDOT does not endorse products. **This list shall not be used for product promotion.**

TxDOT recognizes that some of the items and information it needs to evaluate a device's compliance with NCHRP 350 or MASH may be proprietary and, as such a petitioner may want them to be held in confidence. Within the limits of law, TxDOT will honor written requests for confidentiality.

For information concerning this document, clarification or interpretation of items contained herein, or for further information on submitting a device for consideration, contact the Traffic Standards Engineer.

This list addresses only the crashworthiness of the devices. When maximum sign sizes or maximum number of supports are given, they shall be adhered to. It is the responsibility of the contractor to determine which support is appropriate for a given sign size, location, and soil condition. A device considered crashworthy may not be crashworthy if used or installed incorrectly. It is the contractor's responsibility to use or install the device in a manner such that it will function as intended.

The Engineer, through a General Note in the Plans, may disallow the use of specific devices on this list or require that specific devices from this list be used. A proprietary device should not be used unless: (a) the device is supplied through a competitive bidding with equally suitable unpatented items; (b) TxDOT certifies that they are essential for synchronization with existing highway facilities or that no equally suitable alternative exists; or (c) they must be used for research or for a distinctive type of construction on relatively short sections of road for experimental purposes. The Engineer shall not require the use of a device, of the types included herein, that is not on this list.

TxDOT encourages the use of recycled products when possible. Plastic products shall be UV/color-stabilized.

All reflective sheeting shall as a minimum meet either one of the following Departmental Material Specifications: *DMS-8300, Sign Face Materials* or *DMS-8310, Flexible Roll-up Reflective Signs*. When the sheeting used on a particular device exceeds the requirements of these specifications, all similar devices used in that area shall use equivalent sheeting (e.g., all drums should use an equivalent grade of sheeting).

B. DEFINITIONS

ASTM - American Society for Testing and Materials. This organization publishes many specifications. They are referenced by number of the form "ASTM LXXX-Year" (e.g., ASTM C387-95) and are available from their website: *www.astm.org*.

backfill - soil that was originally in the hole dug for support placement that is used to refill the hole after the support is placed.

barricade - a portable or fixed channelizing device having from one to three rails with appropriate markings (see the *Texas Manual on Uniform Traffic Control Devices* for more details). Barricades are used to control traffic by closing, restricting, or delineating all or a portion of the roadway. The type refers to the number of rails (i.e., a Type I has one rail, a Type II has two rails, and a Type-III has three rails). See Figure B-1 for a description of barricade components.

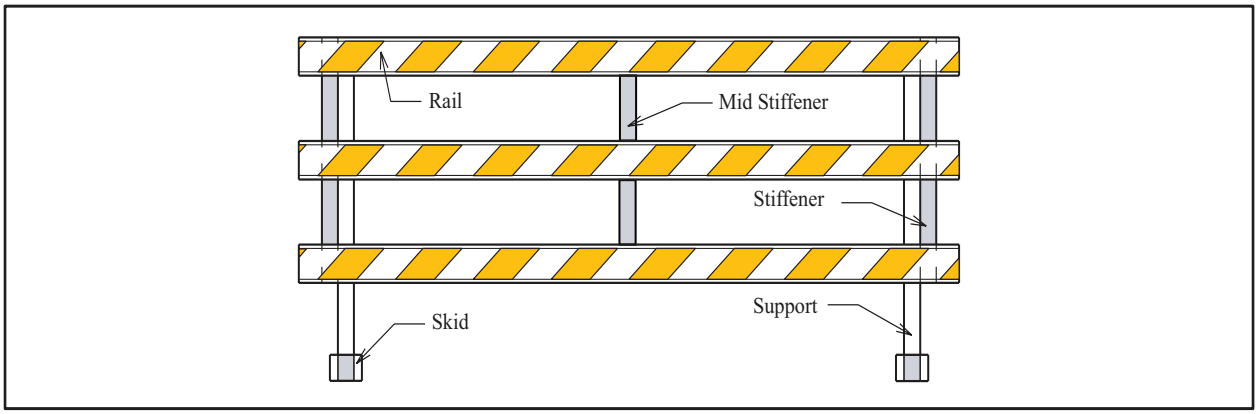

Figure B-1. Barricade component terminology

BC sheets - *Barricade and Construction Standards* are a section of the *Traffic Control Standard Sheets* (TCSS) that are available on the internet at *http://www.txdot.gov/business/disclaim.htm*.

concrete, premixed - normal strength / normal weight concrete complying with *ASTM C387-95 Standard Specification for Packaged, Dry, Combined Materials for Mortar and Concrete*. Most prepackaged concrete mixes comply with this specification.

DMS - TxDOT Departmental Material Specifications are referenced by numbers in the form "DMS-XXXX" (e.g., DMS-8310). In some older publications, the reference number may be in the form "D-9-XXXX". These numbers are available from the TxDOT Construction Division or from the TxDOT website: *www.txdot.gov*.

embedment, direct - placed in the original soil by driving or by creating a hole and backfilling.

FHWA - Federal Highway Administration.

FRP - fiberglass reinforced plastic.

HDPE - high density polyethylene.

HPPL - hollow profile plastic lumber - hollow core plastic boards with dimensions similar to that of lumber.

LDPE - low density polyethylene.

PSST – perforated square steel tubing.

Part 6 of the TMUTCD - *Texas Manual on Uniform Traffic Control Devices - Part 6, Temporary Traffic Control.*

soilcrete - backfill stabilized by mixing with portland cement.

SMD sheets - *Sign Mounting Details* are a section of the *Traffic Control Standard Sheets* (TCSS) that are available on the internet at *http://www.txdot.gov/business/disclaim.htm*.

substrate - component of the sign to which the retroreflective sheeting is affixed.

SYP, No. 2 - No. 2 southern yellow pine. Different species and grades with similar structural properties may be used. For purposes of this list, these equivalent species/grades are:

- No. 2 Southern Pine.
- No. 2 Douglas Fir.
- No. 1 Western Hemlock.
- No. 2 Ponderosa Pine.
- No. 2 Red Pine.
- No. 1 Western Red Cedar.

SPL - solid plastic lumber.

TCSS - *Traffic Control Standard Sheets* are available on the internet at *http://www.txdot.gov/business/disclaim.htm*.

TMUTCD - *Texas Manual on Uniform Traffic Control Devices* available on the internet at *http://www.txdot.gov/txdot_library/publications/tmutcd.htm.*

TRF – TxDOT Traffic Operations Division.

TxDOT - Texas Department Of Transportation.

UV/color-stabilized - denotes a plastic which has chemicals added during the manufacturing process that significantly reduces plastic degradation and color fading caused from exposure to ultraviolet light (i.e., sunlight).

work, duration of - There are five categories for duration of work:

- **long-term** - work that occupies a location more than 3 days.
- **intermediate-term** - work that occupies a location more than one daylight period up to 3 days, or nighttime work lasting more than 1 hour.
- **short-term** - daytime work that occupies a location for more than 1 hour within a single daylight period.
- **short duration** - daytime work that occupies a location up to one hour.
- **mobile** - work that moves continuously or intermittently (stopping up to approximately 15 minutes).

C. TYPE-I BARRICADES

Type-I barricades shall comply with the requirements of the current *Texas Manual on Uniform Traffic Control Devices* (TMUTCD). Warning lights shall not be attached to barricades. Barricades shall be no greater than 8 feet in length.

C.1. Folding Type-I Barricade Systems

- Hollow-Profile Plastic Lumber (HPPL), 2 x 4 HPPL uprights and 1 x 8 HPPL, 1 x 8 wood or plywood rails (Figure C-1). Wood shall be No. 2 SYP or equivalent. Plywood shall be 5/8-inch x 8-inch marine grade, CCA pressure treated, CDX or similar plywood with water resistant glue. Paint all wood surfaces white if not covered by reflective sheeting. Plastic components are available from:
  - Aeolian Enterprises.
  - Centerline Supply, Inc.
  - Fender Enterprises, Inc.
  - Three D Traffic Works, Inc.

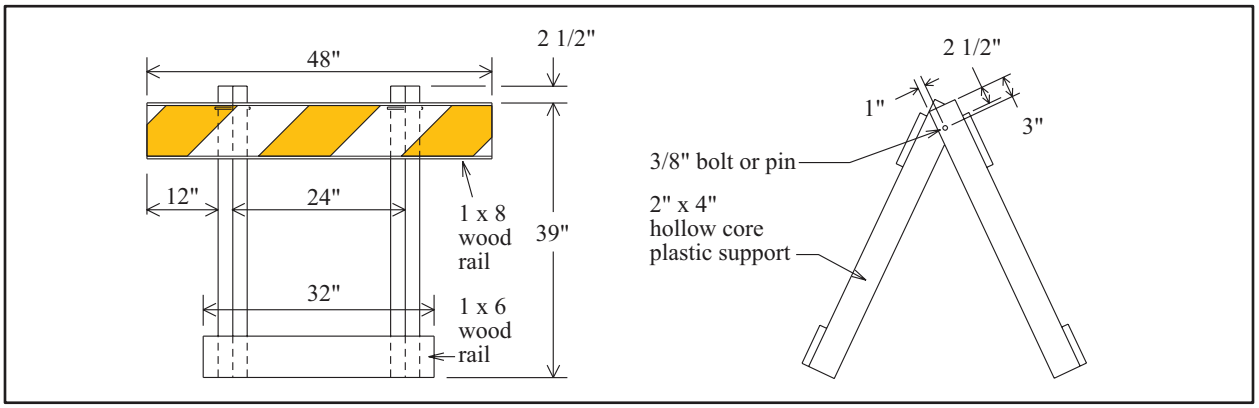

Figure C-1. Generic folding Type-I Barricade made from HPPL

- Folding barricade with steel legs and plastic or plywood rails (Bent Mfg. Co. BDAA, Inc.).
- Universal Plastic Barricade (Bent Mfg. Co. BDAA, Inc.).
- Plank-A-Cade folding plastic barricade (Flasher Flare South East, Inc.).
- Fibercade folding plastic barricade (Plasticade Products).
- Plastic Barricade Model PRB-124 (Cortina Safety Products).
- TD2100 all-plastic barricade (Three D Traffic Works, Inc.).
- TD2150 Works Barricade all plastic (Three D Traffic Works, Inc.).
- TD2200 Works Barricade, Plastic Panels and Galvanized Legs (Three D traffic Works, Inc.).
- TD2250 Works Barricade, Plastic Panels and Steel Legs (Three D traffic Works, Inc.).
- TD2300 Works Barricade, Wood Panels and Galvanized Legs (Three D traffic Works, Inc.).
- TD3000 configured as a Type I or Type II barricade only using only rails contained on this list. Components are not be used as a sign support. (Three D Traffic Works, Inc.).
- Economy plastic folding barricade (TrafFix Devices, Inc.).
- High-Impact plastic folding barricade (TrafFix Devices, Inc.).
- High-Impact plastic panel and steel leg (12 and 14 ga.) folding barricade (TrafFix Devices, Inc.).

C.2. A-Frame Type-I Barricade Systems

- Wood, two 2 x 6 A-frames with 1x8 rail (Figure C-2). Wood shall be No. 2 SYP or equivalent.

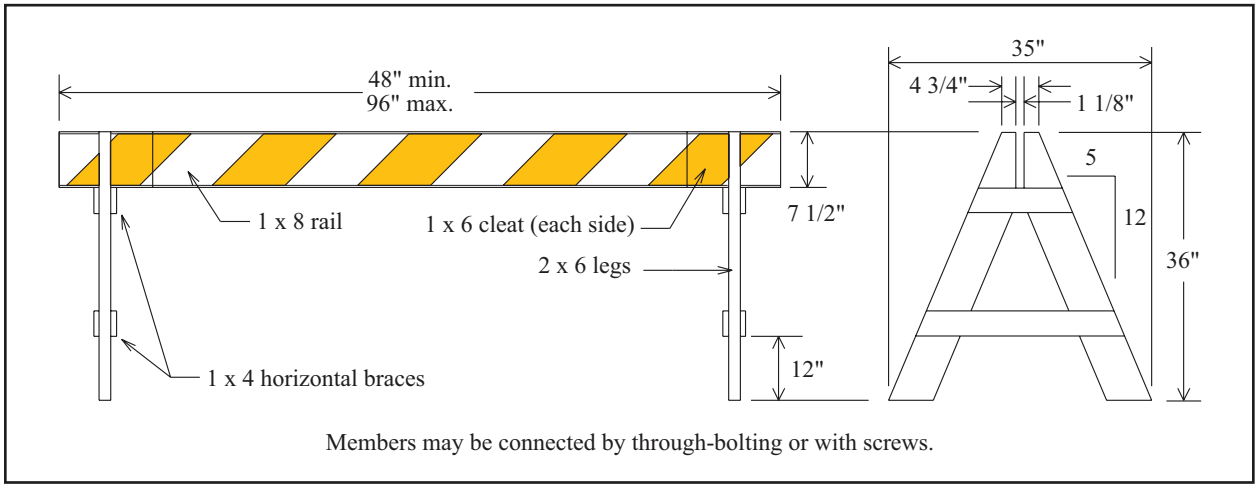

Figure C-2. Generic wooden A-frame Type-I Barricade

- Hollow-profile plastic lumber (HPPL), 1 x 8 rail, 2 x 6 legs, and 1 x 4 braces (Figure C-3). This barricade shall be a minimum of 36 inches and a maximum of 42 inches tall. The rail may vary from 4 to 8 feet in length.

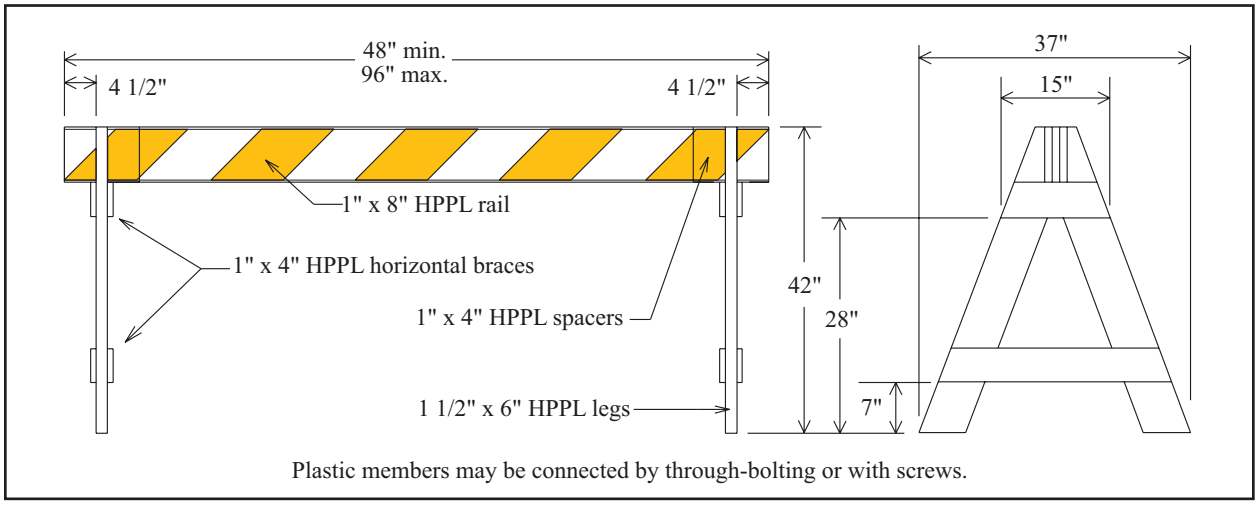

Figure C-3.Generic HPPL A-frame Type-I Barricade

- Parade Style A-Frame Barricade (Cortina Safety Products).
- A-frame plastic barricade (Fender Enterprises, Inc.).
- A-frame plastic barricade (Cortina Safety Products).
- TD3000 configured as a Type I or Type II barricade only using only rails contained on this list. Components are not be used as a sign support. (Three D Traffic Works, Inc.).
- TrafFix-"A"-CADE™ rigid A-frame barricade system and TrafFix-RAIL™ or 1 x 8 No. 2 SYP (or equivalent) (TrafFix Devices, Inc.).

C.3. Skid Mount Type-I Barricade

Type-I Skid mounted barricades (Figures C-4 and C-5) can be made with the same rails, supports, and skids allowed for type-III barricades. A skid mount type-I barricade should be no more than 36 inches tall. Stiffeners and mid-stiffeners are not needed for the construction of type-I barricades.

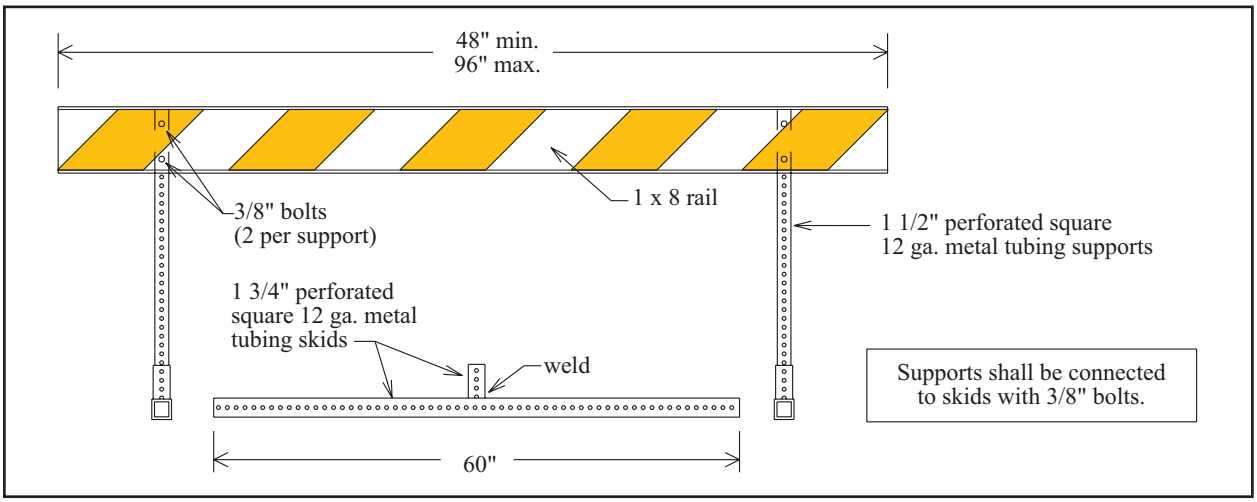

Figure C-4. Generic perforated square metal tubing skid-mount Type-I Barricade

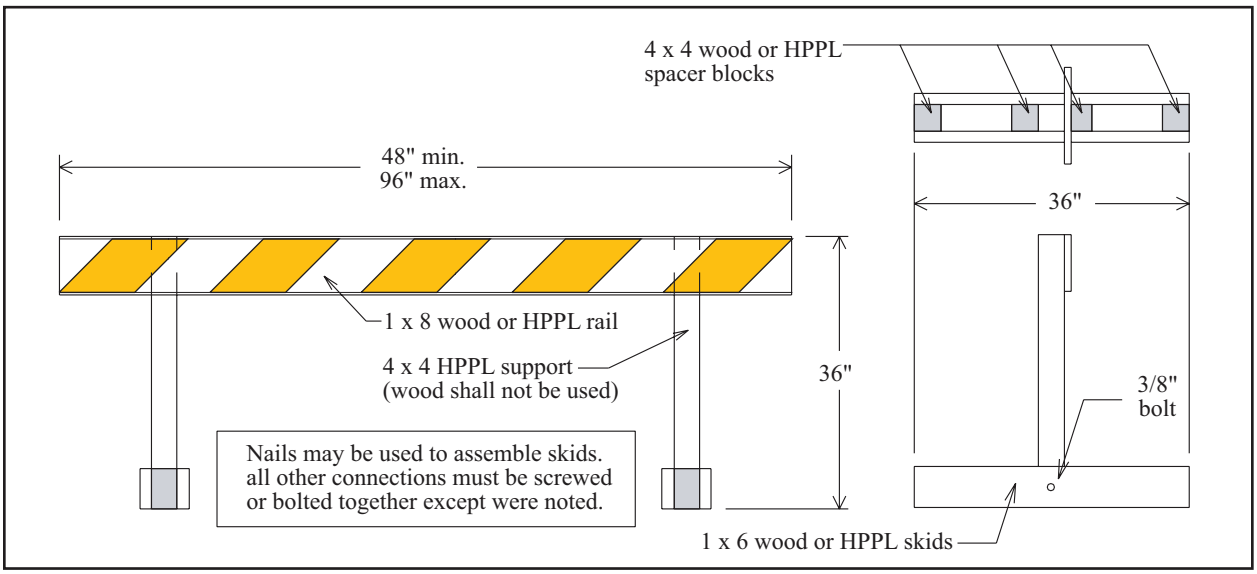

Figure C-5. Generic wood & HPPL skid-mount Type-I Barricade

Pre-assembled type-I barricade (skid type) systems are available from:

- Melba, USA - System '98™ Models M1B-1-24 and M2B-1-48 (Eastern Metal / USA Sign).
- Fendercade type-I modular barricade system (Fender Enterprises, Inc.).
- HPPL barricade with rubber skids (Rad-Tec Fabricators, Inc.).
- TrafFix-CADE™ modular barricade system (TrafFix Devices, Inc.).

THIS PAGE
INTENTIONALLY
LEFT BLANK

D. TYPE-III BARRICADES

Type-III barricades shall comply with the requirements of the current *Barricade and Construction Standards* (BC Sheets) and the current *Texas Manual on Uniform Traffic Control Devices* (TMUTCD). Warning lights shall not be attached to barricades. Barricades shall be no greater than 8 feet in length.

A lower cross member (Figure D-1) is often needed on some barricade system with plastic rails. The purpose of the rail is to provide structural support if the rails cannot. The presence or absence of the rail has no bearing on the crashworthiness of the barricade.

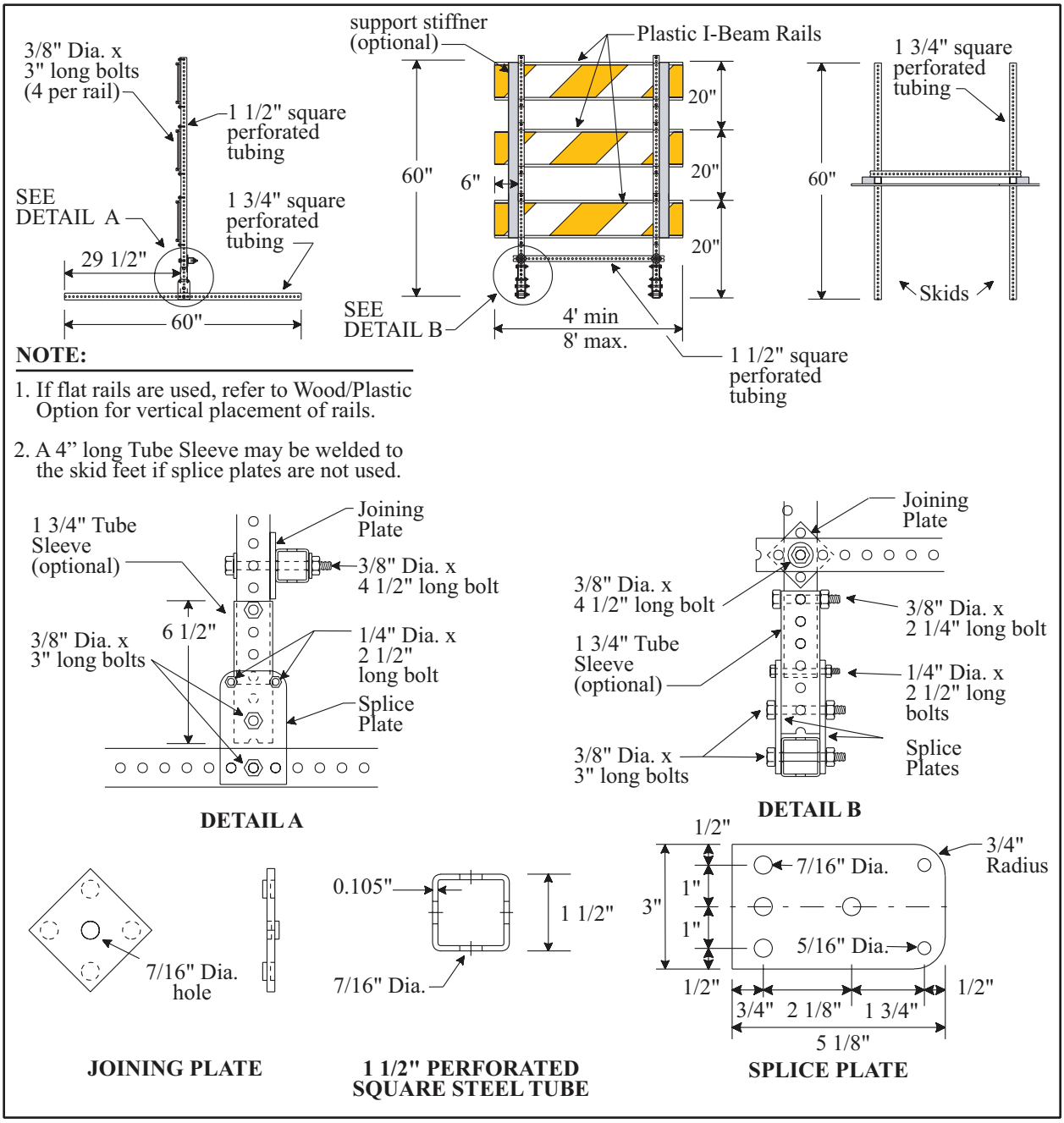

Figure D-1. Perforated square metal tubing barricade with plastic rails showing lower structural cross member

D.1. Type-III Barricade Systems

D.1.a. Type III Barricades

- Type-III barricades may be obtained as complete units from the following:
  - Bent Mfg. Co. BDAA, Inc.
  - Cortina Safety Products.
  - Davidson Plastics Corporation (Model T3B).
  - Eastern Metal / USA Sign
    (Model B35-8EG-R and Melba, USA - System '98™ Model M2B-3, Melba "Long Board").
  - Fender Enterprises, Inc. (Models 047HI).
  - Hwy Com, Inc.
  - IRS™ Type III Barricade.
  - PBS, Inc.
  - Plasticade Products (Plasticade Telespar Type III Barricade with PSST uprights and feet or PSST uprights and angle iron feet).
  - Plasticade Products (Power Post Plastic uprights with PSST or angle iron feet).
  - Plasticade Products (Type III Barricade with angle iron uprights and feet).
  - Rad-Tec Fabricators, Inc.
  - Recycled Plastic Products, Inc.
  - Three D Traffic Works, Inc. (Model TD2400 plastic rails and uprights with PSST, angle steel, or 35 lb rubber based designed for this product).
  - Three D Traffic Works, Inc. (Model TD2500 wood rails with angle steel base).
  - Three D Traffic Works, Inc. (Model TD2550 wood rails with PSST base).
  - Three D Traffic Works, Inc. (Model TD2600 plastic rails with angle steel base).
  - Three D Traffic Works, Inc. (Model TD2650 plastic rails with PSST base).
  - TrafFix Devices, Inc. (Models 5004-HI-2 & 5008-HI-2).
  - Western Highway Products, Inc. (Ulti-Mate Barricade).

D.1.b. Type III Barricades for road closures

- Yodock Wall Co., Inc. (Barrier Model, 2001, Energy Dispersement Cell)

D.2. Type-III Barricade Components

D.2.a. Rails (Type-III Barricade)

- Wood, 1 x 8 No.2 SYP or equivalent structurally equivalent grade.
- Plywood, 1/2 or 5/8 inch x 8 inch. Marine Grade, CCA Pressure-Treated, CDX or similar plywood with water-resistant glue are acceptable rail materials for contractor barricades. Use only Marine Grade plywood for barricades that will remain after project completion. Paint all wood surfaces white if not covered by reflective sheeting.
- High-density polyethylene (HDPE), I-beam, 0.7 lb/ft maximum, 8-inch single thickness web, and hollow core flanges.
- TrafFix-RAIL (TrafFix Devices, Inc.) can be used alone or with TrafFix Device's Rail Clip.
- Hollow-profile plastic lumber (HPPL), 1 x 8 rectangular, 0.8 lb/ft max. May have internal stiffeners.
  - Aeolian Enterprises.
  - CenterLine Supply, Inc.
  - Cortina Safety Products.
  - Eastern Metal / USA Sign.
  - Fender Enterprises, Inc.
  - Flasher Flare South East, Inc.
  - Itasca Plastics.
  - Plasticade Products.
  - Plastic Safety Systems, Inc.

- Recycled Plastic Products, Inc.
- Three D Traffic Works, Inc.).

❖ InteCell® 13 to 16 mm integral skin expanded foam PVC sheet. (Inteplast Group, Ltd.).

D.2.b. Supports (Skid-Type Type-III Barricade)

❖ Fiberglass reinforced plastic (FRP) Pipe, 3-inch diameter, 1/8- inch wall thickness. Must meet *DMS-4410, Fiberglass Reinforced Plastic Sign Supports*.
- Hwy Com, Inc.

❖ High-density Polyethylene (HDPE) Pipe, 3-3/4 inch diameter, 0.089-inch wall thickness.
- Eastern Metal / USA Sign.

❖ Hollow-profile plastic lumber (HPPL), 4 x 4 square, 0.6 lb/ft maximum.
- Aeolian Enterprises.
- Bufftech.
- Fender Enterprises, Inc.
- Plastic Safety Systems, Inc.
- Recycled Plastic Products, Inc.

❖ Steel tubing, perforated square metal, 1-1/2 inches square, 12 gauge.
- Allied Tube and Conduit Corporation.
- Centerline Supply, Inc.
- Fender Enterprises, Inc.
- Northwest Pipe Co.
- Ultimate Highway Sales, Inc.
- Unistrut Corporation.
- Western Highway Products, Inc.

❖ Steel tubing, circular metal, 2-3/8 inches diameter with 0.080 or 0.095-inch wall thickness (thin wall).
- Northwest Pipe Company or any other manufacturer.

❖ X-tube, 1-3/4 inch square plastic with X-stiffener, 0.6 lb/ft maximum.
- Centerline Supply, Inc.
- Davidson Plastics Corporation.
- Three D Traffic Works.

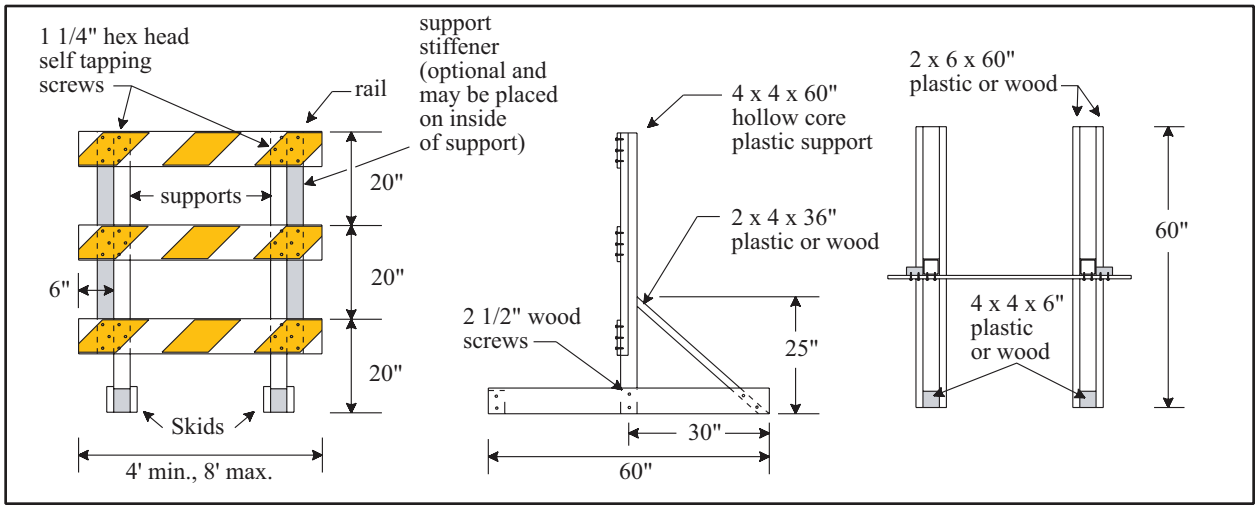

Figure D-2. Wood/plastic Type-III Barricade

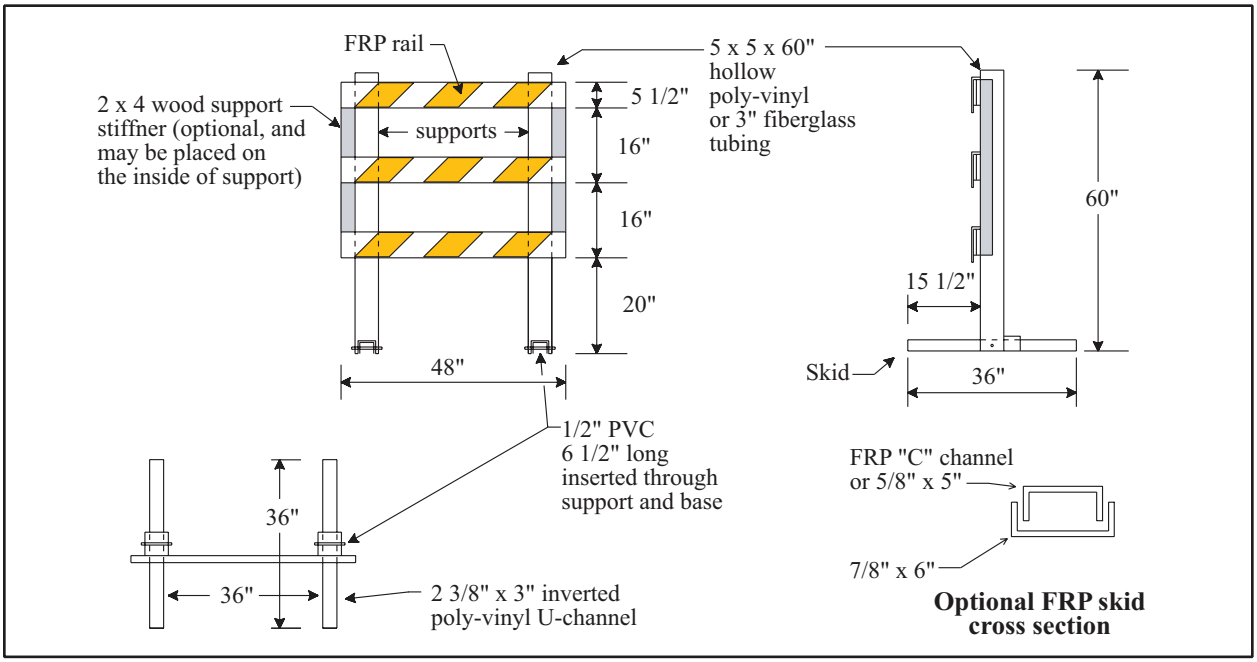

Figure D-3. Plastic/fiberglass Type-III Barricade

D.2.c. Stiffeners (Type-III Barricade)

Stiffeners are not required. The contractor may choose to use them if they aid in setting up or taking down the barricade.

- Wood, 2 x 4 No. 2 SYP or equivalent.
- Hollow-profile plastic lumber (HPPL), 2 x 4 rectangular or 4 x 4 square, 0.6 lb/ft maximum.
  - Aeolian Enterprises.
  - Bufftech.
  - Fender Enterprises, Inc.
  - Plastic Safety Systems, Inc.
  - Recycled Plastic Products, Inc.
- Steel tubing, perforated square metal, 1-1/2 inches square, 12 gauge.
  - Allied Tube and Conduit Corporation.
  - Fender Enterprises, Inc.
  - Ultimate Highway Sales, Inc.
  - Unistrut Corporation.
  - Western Highway Products, Inc.
- Steel tubing, circular metal, 2-3/8 inches diameter with 0.080 or 0.095-inch wall thickness (thin wall).
  - Northwest Pipe Company or any other manufacturer.
- Solid plastic lumber (SPL), 2 x 4 rectangular.
  - Metro Plastic Barricades.
  - Recycled Plastic Products, Inc.
- X-tube, 1-3/4 inch square plastic with X-stiffener, 0.6 lb/ft maximum.
  - Centerline Supply, Inc.
  - Davidson Plastics Corporation.

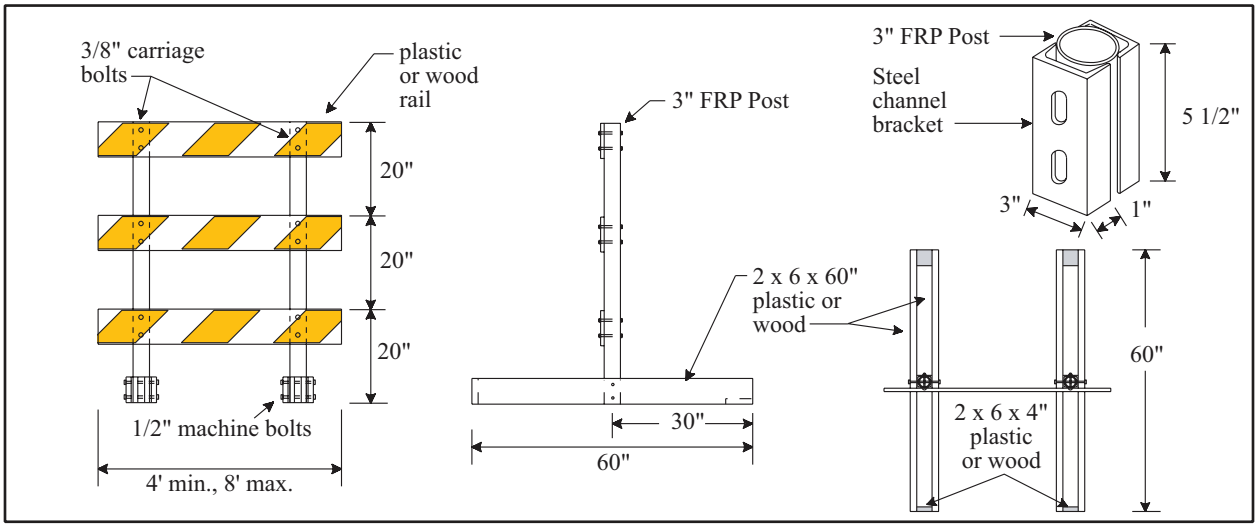

Figure D-4. Wood/plastic/fiberglass Type-III Barricade

D.2.d. Mid-rail Stiffeners (Type-III Barricade)

Mid-rail stiffeners are not required unless there is noticeable twisting of the rails due to lack of support.

- Wood, 2 x 4 No. 2 SYP or equivalent.
- Hollow-profile plastic lumber (HPPL), 2x 4 rectangular or 4 x 4 square, 0.6 lb/ft maximum.
  - Aeolian Enterprises.
  - Bufftech.
  - Fender Enterprises, Inc.
  - Plastic Safety Systems, Inc.
  - Recycled Plastic Products, Inc.
- X-tube, 1-3/4 inch square plastic with X-stiffener, 0.6 lb/ft maximum.
  - Centerline Supply, Inc.
  - Davidson Plastics Corporation.

D.2.e. Skids (Type-III Barricade)

- Wood, 2 x 6 No. 2 SYP or equivalent.
- Steel tubing, perforated or solid wall square metal, 1-3/4 inches, or 2”, 12 gauge.
  - Allied Tube and Conduit Corporation.
  - Fender Enterprises, Inc.
  - Three D Traffic Works.
  - Ultimate Highway Sales, Inc.
  - Unistrut Corporation.
- Hollow-profile plastic lumber (HPPL), 2x 6 rectangular.
  - Aeolian Enterprises.
  - Bufftech.
  - Fender Enterprises, Inc.
  - Plastic Safety Systems, Inc.
  - Recycled Plastic Products, Inc.
- Solid plastic lumber (SPL), 2 x 6 rectangular.
  - Metro Plastic Barricades.
  - Recycled Plastic Products, Inc.
- Crumb rubber.
  - Rad-Tec Fabricators, Inc.

- Three D Traffic Works.

- HDPE Extrusion.
  - Anchor Base (Plastic Safety Systems, Inc.)
- Angle Steel, 1 1/2” x 1 1/2” x .125"
  - Three D Traffic Works.

D.2.f. Posts (Fixed-Type Type-III Barricade)

Supports listed below may have specific allowable anchoring methods, number of posts allowed in 7-foot vehicle path, and soil requirements. Strict adherence to these requirements is essential for the device to function as intended during a crash. The contractor is responsible for installing devices as they were designed to be used.

- Steel tubing, perforated 1-1/2 inch square, 12 gauge with 7/16-inch holes punched on 1-inch centers. This support may be directly embedded a minimum of 48 inches in both weak and strong soils. As an option, an anchor stub may be use. The anchor stub is the next larger size tubing. Additionally, an 18-inch reinforcing sleeve made from the next larger size tubing may be used. The optional anchor stub, when used, shall be embedded at least 34 inches in strong soils or 55 inches in weak soils with approximately 1 inch protruding above the ground. Both systems may also be set in concrete, soilcrete, or expanding polyurethane foam.
  - Allied Tube and Conduit Corporation.
  - Fender Enterprises, Inc.
  - Ultimate Highway Sales, Inc.
  - Unistrut Corporation.
  - Western Highway Products, Inc
- Tubing, circular metal, 2-3/8 inches diameter with 0.080 or 0.095-inch wall thickness (a.k.a. thin wall) used with Poz-Loc Wedge and Socket Foundation. Socket may be used as driveable base in strong soil or it may be set in concrete or expanding polyurethane foam.
  - Northwest Pipe Company.
- V-Loc™ Socket System - This anchor system may be used with thin-wall round tubing and 2-inch square tubing. With an adapter, the anchor can also be used with U-channel.
  - TAPCO - Traffic & Parking Control Co., Inc.
- Fiberglass reinforced plastic (FRP) pipe may be directly embedded or may be anchored with the Universal Anchor System. No more than 2 posts shall be installed within a 7 foot span. The anchor, if used, should be set in concrete or expanding polyurethane foam. Anchor shall protrude no more than 4 inches from the ground. As an option, the post (without the anchor) may be set in concrete, soilcrete, or expanding polyurethane foam.
  - Hwy Com, Inc.
  - Universal Anchor Systems, L.L.C.

D.2.g. Long Term (For application to surface of pavement)

- Fiberglass reinforced plastic (FRP) pipe may be anchored with the Universal Anchor System or bolt down Universal Anchor. No more than 2 posts shall be installed within a 7 foot span. The anchor, if used, should be set in concrete or expanding polyurethane foam. Anchor shall protrude no more than 4 inches from the ground. As an option, the post (without the anchor) may be set in concrete, soilcrete, or expanding polyurethane foam.
  - Hwy Com, Inc.
  - Universal Anchor Systems, L.L.C.

E. SPECIAL USE BARRICADES

E.1. Direction Indicator Barricades

Direction Indicator Barricades shall comply with the requirements of the current Barricades and Construction Standards (BC Sheets) and the Texas Manual on Uniform Traffic Control Devices (TMUTCD). Warning lights shall not be attached to the barricade.

Direction indicator barricades (Figure E-1) are available from:

- Trailblazer Plus (Cortina Safety Products).
- IRS® Directional Indicator Barricade (IRS® - Impact Recovery Systems).
- SafetyCade S.H.R.P. (Plasticade Products).

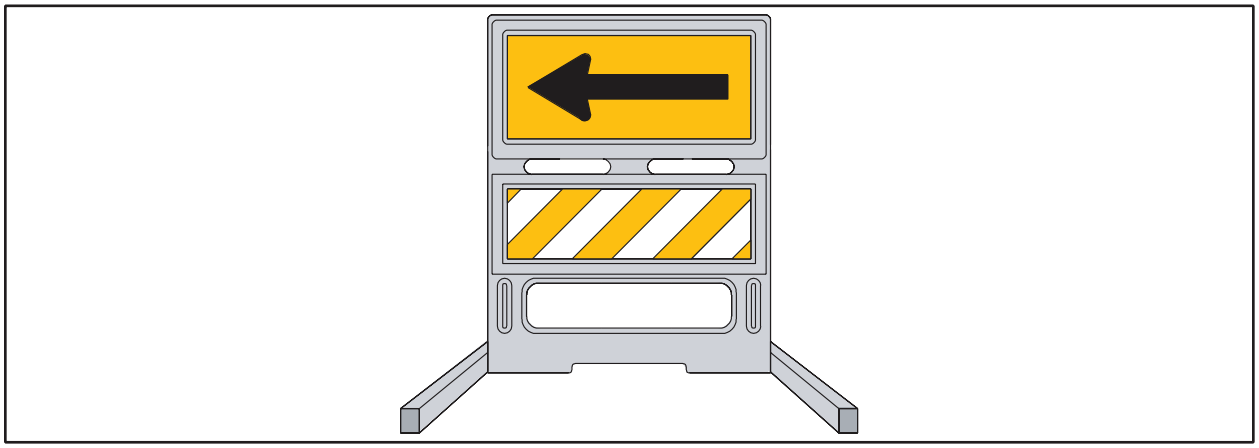

Figure E-1. Direction Indicator Barricade

E.2 Detectable Pedestrian Barricades

Detectable Pedestrian Barricades shall comply with the requirements of the Texas Manual on Uniform Traffic Control Devices (TMUTCD). Warning lights shall not be attached to the barricade.

- Strong Wall ADA Compliant Pedestrian Barricade (Plasticade Products).
- Safety Rail (Plastic Safety Systems, Inc.).
- Safety Wall ADA-Compliant Pedestrian Barricade (Plastic Safety System, Inc.).

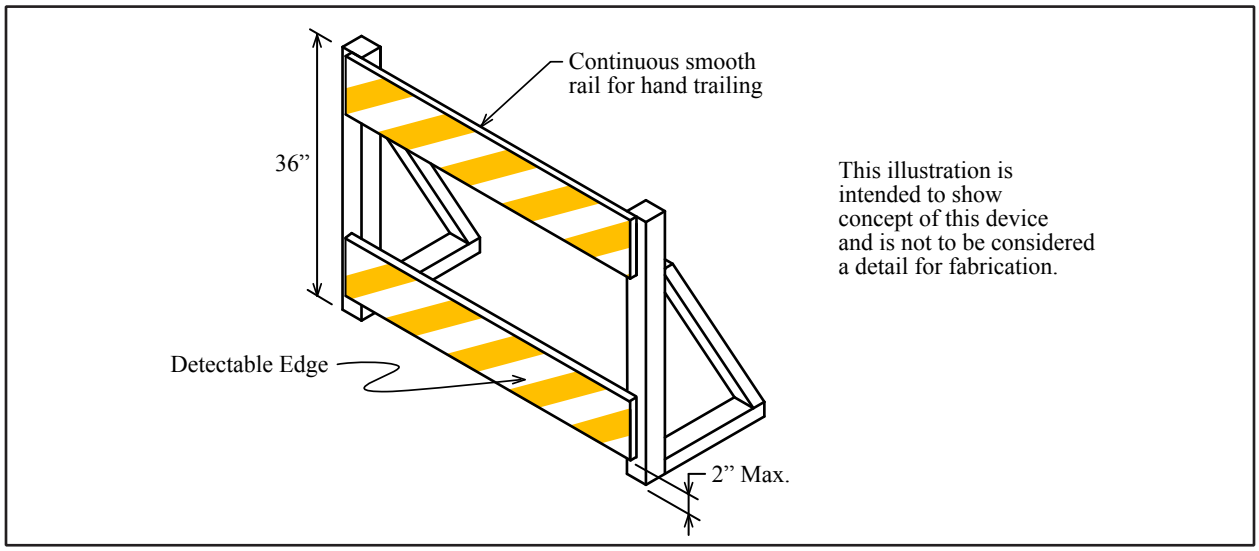

Figure E-2. Detectable Pedestrian Barricade

THIS PAGE
INTENTIONALLY
LEFT BLANK

F. VERTICAL PANELS

Vertical Panels (VPs) shall comply with the requirements of the current *Barricade and Construction Standards* (BC Sheets) and the current *Texas Manual on Uniform Traffic Control Devices* (TMUTCD). Warning lights shall not be attached to VPs.

F.1. Rigid Vertical Panel

F.1.a. Driveable Supports for Rigid Vertical Panels

- Flange channel, steel, 2.0 lb/ft maximum.
- Pipe, steel, 1/2 inch schedule 40.
- Angle, steel, 1-1/2 inch x 1-1/2 inch.
- Wood, 2 x 4 No. 2 SYP or equivalent.
- Flexible delineator posts which comply with *DMS-4400, Flexible Delineator and Object Marker Post (Embedded and Surface Mount Types)*.

F.1.b. Substrates for Rigid Vertical Panels

- Plastic, solid 1/8 to 1/4-inch thick, fiber-reinforced and non-reinforced.
  - Polyethylene panel, 1/8-inch thickness (Fender Enterprises, Inc.).
  - Polyethylene panel, ¼-inch thickness (Fender Enterprises, Inc.).
  - ABS acrylic (International Plastics Corporation).
  - Fiberglass reinforced polycarbonate (International Plastics Corporation).
  - Polyplate® Fiberglass reinforced plastic sign panel, 0.135-inch thick. (Sequentia Incorporated).
  - Fiber-Brite (U.S. Highway Products).
  - Survivor (U.S. Highway Products).
- Plastic, Waffle Board, 1/4-inch thick.
  - Fender Enterprises, Inc.
- Plastic, Blow Molded High-Density Polyethylene Panel.
  - TrafFix Devices, Inc.
  - Itasca Plastics.
- Plastic, Corrugated Panel with or without fiberglass reinforcement.
  - Coroplast 10mm extruded thinwall fluted plastic sheet (Coroplast, Inc.).
  - IntePro®10mm extruded thinwall fluted plastic sheet (Inteplast Group Ltd.).
  - Endurance™ Sign (Reflexite Corporation).
  - Coro-Lite Corrugated FRP Sign Panel, 0.25 inches thick (US Highway Products).
  - Fiber-Brite Fiberglass-Reinforced Plastic Sign Panel, 0.135 inches thick (US Highway Products).
- Plywood, 3/8 or 1/2-inch thick marine grade, CCA pressure treated, CDX or similar plywood with water-resistant glue. Paint all wood surfaces white if not covered by reflective sheeting.

F.1.c. Portable Rigid Vertical Panel Systems

A portable rigid vertical panel (Figure F-1) is usually made with a rigid plastic panel mounted on a plastic upright with a base or by attaching a semi-rigid panel to a standard two-piece cone

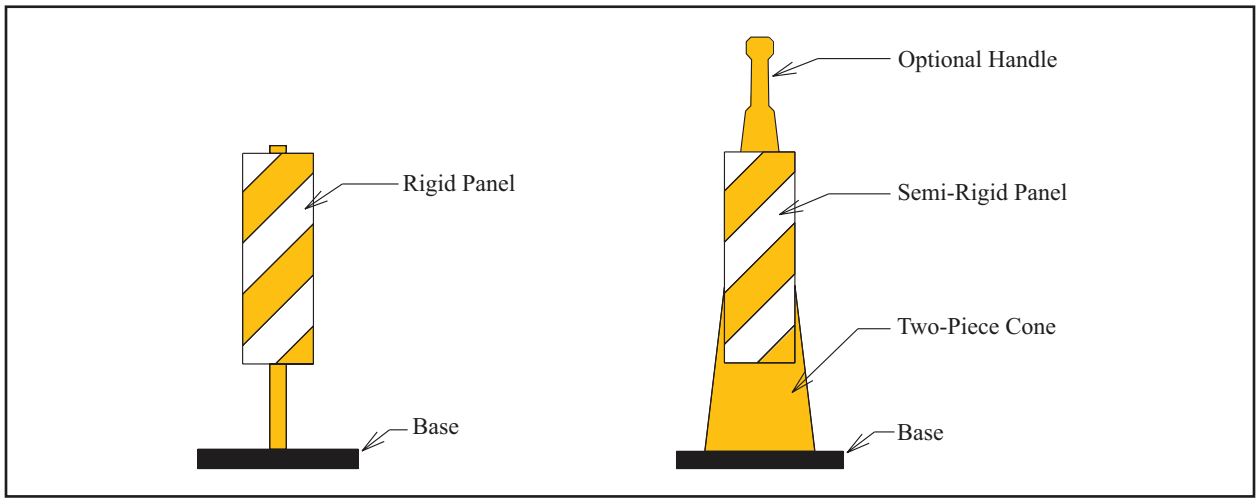

Figure F-1. Typical portable rigid vertical panels

- Any compliant two-piece cone with a semi-rigid substrate panel attached securely.
- Plastic pipe, 1-1/2 inch Schedule 40 PVC with an approved panel and a rubber base.
- T-Top Stackable vertical panel with 30 lb. base (Bent Mfg. Co. BDAA, Inc.).
- Ultra Panel - stackable vertical panel with 30 lb. base (Bent Mfg. Co. BDAA, Inc.).
- Models VPB-36 and 44 VPs (Cortina Safety Products).
- TrailBlazer Vertical Panel (Cortina Safety Products).
- 45” Vertical Panel with 30 lb. base (Custom-Pak, Inc.)
- Melba, USA - System '98™ Model M1B-V-36EG/EG (Eastern Metal / USA Sign).
- Fendercade VP (Fender Enterprises, Inc.).
- 8 x 24 or 12 x 36 Inch VP (Flasher Flare South East, Inc.).
- Divertor with 30 lb. base (Lakeside Plastics, Inc.).
- MSi DuraStem™ recycled VP (MSi - Material Sales International).
- 42 inch Navigator™ VP (Plastic Safety Systems, Inc.).
- Gemstone Vertical Panel (Plasticade Products).
- Minicade VP (Plasticade Products).
- Narrowcade VP (Plasticade Products).
- Vertical Panel with crumb rubber base (Rad-Tec Fabricators, Inc.).
- DDK VP (Service Signing, L.C.).
- Tracker VP with 30 lb. base (Stripes & Stops Co., Inc.).
- TD6000 vertical panel without light (Three D Traffic Works, Inc.).
- TD6500 Universal Vertical Panel with 32 lb rubber base designed for this device (Three D Traffic Works, Inc.).
- VERSA Panel (Traffic Control Products Group).
- “Blow Molded” VP (TrafFix Devices, Inc.).
- Grabber VP with 30 lb. base (TrafFix Devices, Inc.).
- SafetyCade VP (Plasticade Products).

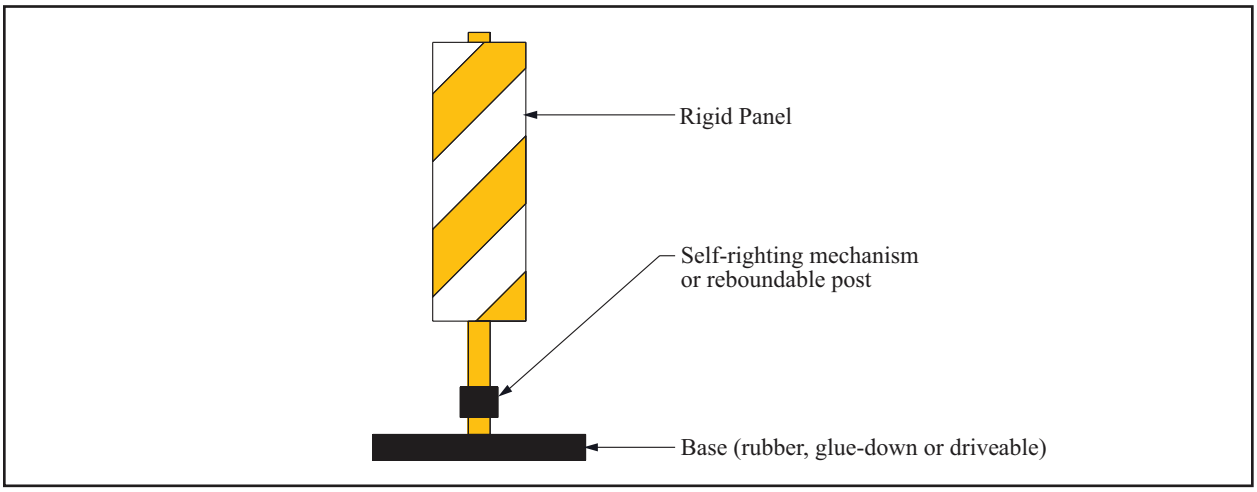

Figure F-2. Self-righting vertical panel

F.2. Self-Righting Vertical Panel

A self-righting vertical panel (Figure F-2) is designed to stand back up after an impact.

- Models 52X, 55X or 56X Vertical Panel or 54X Opposing Traffic Lane Divider (Davidson Traffic Control Products).
- IRS® self-righting VP (IRS® - Impact Recovery Systems).
  Note: May also be purchased with opposing traffic lane divider symbol in lieu of vertical panel.
- Safe-Hit Reboundable VP (Safe-Hit Corporation).
- TD5275 Boomerang VP, glued down or bolted down or on 32 lb rubber base (Three D Traffic Works, Inc.) Note: May also be purchased with opposing Traffic Lane Divider symbol in lieu of vertical panel.
- H.I.T.M.E. self-righting VP (Traffic Control Systems).

THIS PAGE
INTENTIONALLY
LEFT BLANK

G. EDGELINE CHANNELIZERS

This device is intended for use in place of a vertical panel to channelize traffic by indicating the edge of the travelway. This device shall not be used to separate lanes of traffic (opposing or otherwise). This device is based on a 42-inch two-piece cone with an alternate striping pattern: four 4-inch retroreflective bands, the top band at approximately 36 inches and the rest located successively below the first with an approximate 2-inch gap between bands. The color of the band should correspond to the color of the edgeline (yellow for left edgeline, white for right edgeline) for which the device is substituted or for which it supplements. The base must weigh a minimum of 30 lbs.)

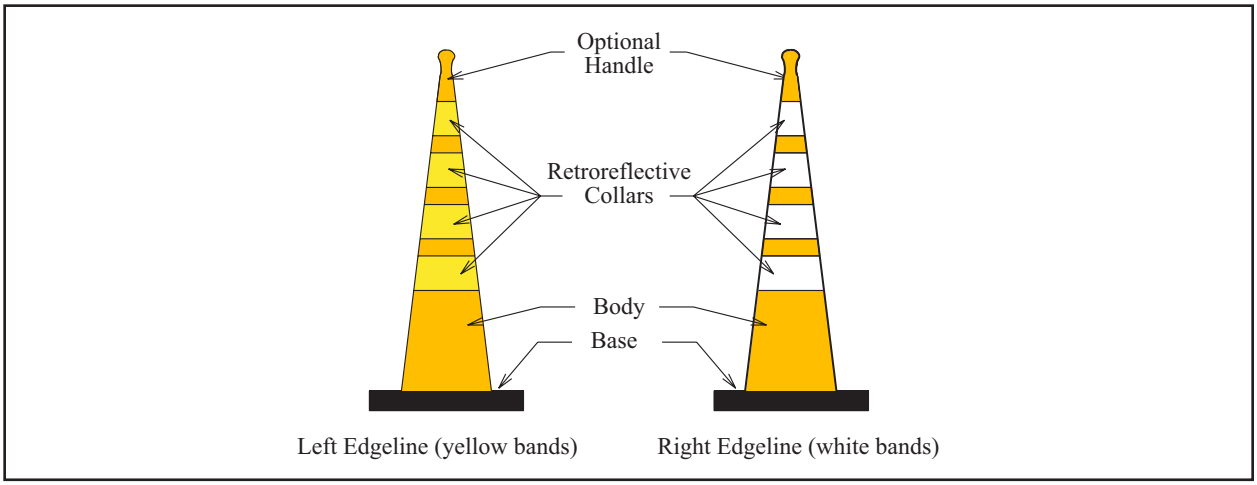

Figure G-1. Edgeline channelizer

- T-Top Stackable Channelizer with rubber base (Bent Mfg. Co. BDAA, Inc.).
- Channelizer Cones (Cortina Safety Products).
- Divertor (Lakeside Plastics, Inc.).
- 42 inch Navigator™ (Plastic Safety Systems, Inc.).
- TD7000 (Three D Traffic Works, Inc.).
- TD7500 Ringtop Slim-Line Channelizer (Three D Traffic Works).
- 42 inch Grabber Cone (TrafFix Devices, Inc.).
- C-42 Channelizer (Work Area Protection Corp.).

THIS DEVICE IS NOT TO BE USED ON PROJECTS LET AFTER MARCH 2014

THIS PAGE
INTENTIONALLY
LEFT BLANK

H. CONES

Cones (Figure H-1) shall comply with the requirements of the current *Barricade and Construction Standards* (BC Sheets) and the current *Texas Manual on Uniform Traffic Control Devices* (TMUTCD). Warning lights shall not be attached to cones. Cones may be used as channelizing devices for short-term work. When used at night, retroreflective striping shall conform to *Part 6 of the Texas Manual on Uniform Traffic Control Devices* which states that "Retroreflectorization of cones that are 28 to 36 inches in height shall be provided by a 6 inch white band located 3 to 4 inches from the top of the cone and an additional 4 inch wide white band approximately 2 inches below the 6 inch band. Retroreflectorization of cones that are more than 36 inches in height shall be provided by horizontal, circumferential, alternating orange and white retroreflective stripes that are 4 to 6 inches wide. Each cone shall have a minimum of two orange and two white stripes with the top stripe being orange. Any nonretroreflective spaces between the orange and white stripes shall not exceed 3 inches in width."

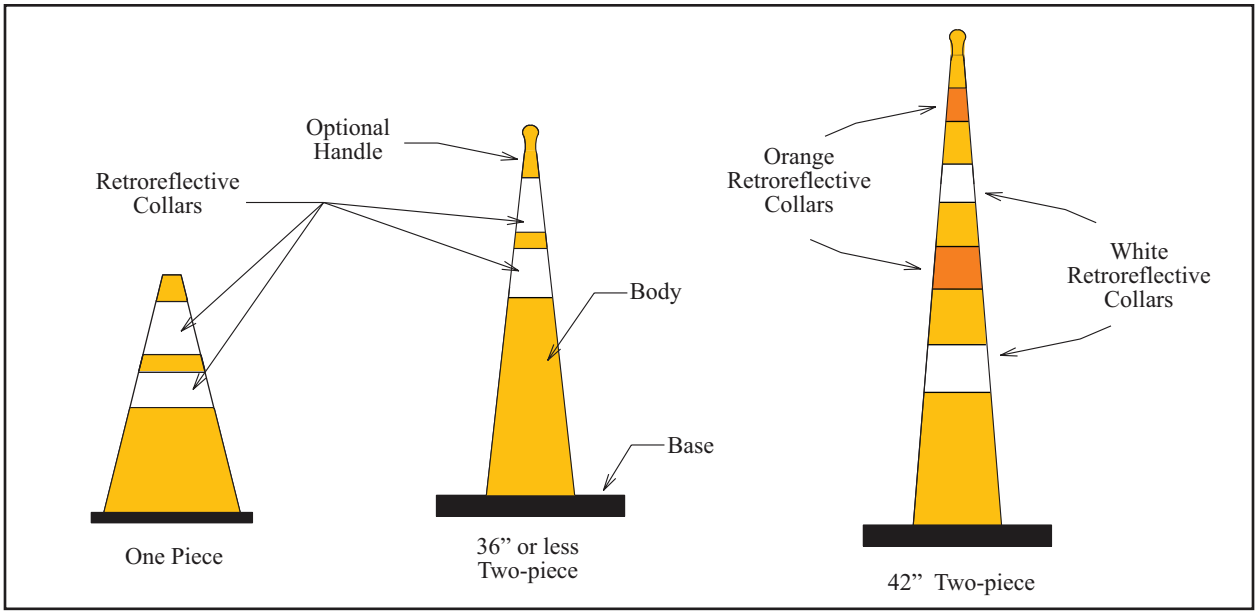

Figure H-1. One and two-piece plastic cones

H.1. One-Piece Cones

One-piece cones from any manufacturer are acceptable. One-piece cones must be a minimum of 28 inches tall and weigh a minimum of 9.5 lbs. One-piece cones shall not be used at night without dedicated personnel on duty to maintain them.

H.2. Two-Piece Cones

Bases for 42-inch two-piece cones must weigh at least 30 lb. 28-inch two-piece cones must meet the minimum 9.5 lbs. requirement of the one-piece cones. Additionally, 28-inch two-piece cones may not be left up overnight unattended. 42-inch two-piece cones may be left up unattended overnight.

- T-Top Stackable Channelizer with rubber base (Bent Mfg. Co. BDAA, Inc.).
- 42 inch Tear Drop Stackable Channelizer TDSC-42 (Bent Mfg. Co. BDAA, Inc.).
- Divertor (Lakeside Plastics, Inc.).
- Channelizer Cones (Cortina Safety Products).
- 42" Navicade Channelizing Device (Plasticade Products).

- 28 inch Navigator™ (Plastic Safety Systems, Inc.).
- 42 inch Navigator™ (Plastic Safety Systems, Inc.).
- TD7000 (Three D Traffic Works, Inc.).
- TD7500 Ringtop Slim-line channelizer cone (Three D Traffic Works, Inc.).
- 28 inch Grabber Cone (TrafFix Devices, Inc.).
- 42 inch Grabber Cone (TrafFix Devices, Inc.).
- 42 inch Looper Cone (TrafFix Devices, Inc.).
- 42” C-42 Channelizer Cone (Work Area Protection Corp.).

I. PLASTIC DRUMS

Plastic Drums (Figure I-1) shall comply with the requirements of the current *Barricade and Construction Standards* (BC Sheets) and the current *Texas Manual on Uniform Traffic Control Devices* (TMUTCD).

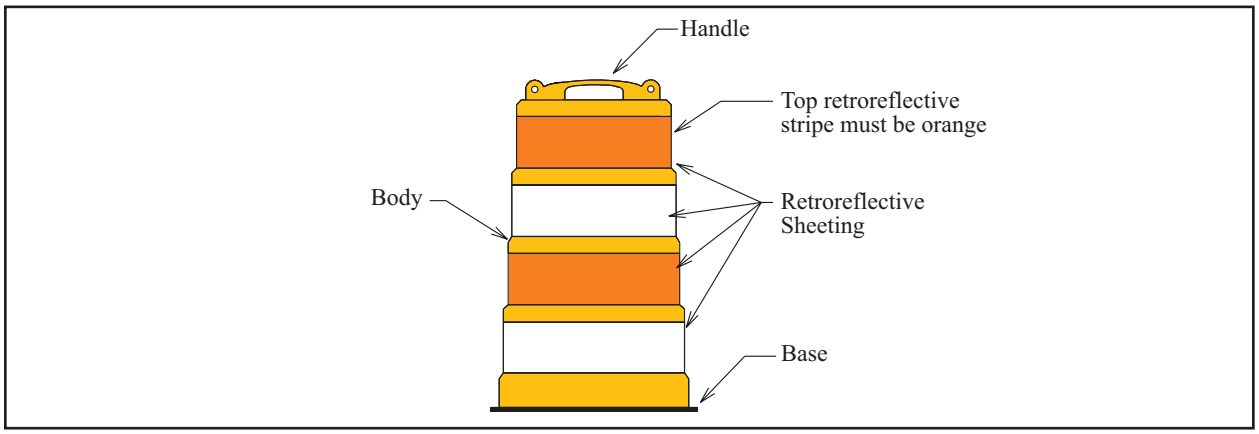

Figure I-1. Plastic drum

I.1. Plastic Drums

- Superdome (LDPE or HDPE) Drum (Bent Mfg. Co. BDAA, Inc.) with one of the following bases:
  - Plastic snap-on (uses sand bags or Bent delineator bases for ballast).
  - 40 lb. rubber snap-on.
- Superdome Tire Ring (SDTR) Drum (Bent Mfg. Co. BDAA, Inc.) for use with recycled truck tire sidewall base.
- Highway Tech Drum (Cortina Safety Products).
  - # 03-780-4HI
  - # 03-780-6HI
  - # 03-782-4HI
  - # 03-782-6HI
- Trail Boss (Cortina Safety Products).
- Model 1500 (LDPE) or Model 1510 (HDPE) Drum (Cortina Safety Products) with one of the following bases:
  - Plastic snap-on.
  - 40 lb. solid rubber.
- THE DIRECTOR with 40 lb rubber base (Lakeside Plastics).
- Lifegard® Channelizer with recycled truck tire sidewall base (Plastic Safety Systems, Inc.).
- Lifegard II ® (Plastic Safety Systems, Inc.).
- Rhino Channelizer Drum (HDPE or LDPE) with sand-fillable base or with recycled truck tire sidewall base (Plasticade Products).
- Commander Traffic Drum (HDPE or LDPE) with recycled truck tire sidewall base (Plasticade Products).
- Econocade II Traffic Drum with recycled truck tire sidewall base (Plasticade Products).
- LD10 with plain base (Radiator Specialty Company).
- 18000-HDPE or 18000-LDPE (TrafFix Devices, Inc.) with one of the following bases:
  - Sand bag snap-on.
  - San-Fil® snap-on.
  - 40 lb. rubber snap-on.
  - Recycled truck tire side-wall.
- Plastic Safety Barrel (Work Area Protection Corporation).
- Lane Changer Traffic Drum B500LC (Work Area Protection Corporation) with one of the following bases:
  - 40 lb. rubber base.
  - Recylced truck tire sidewall.

I.2. Substrates for Signs Used on Plastic Drums

- Coroplast 10mm extruded thinwall fluted plastic sheet (Coroplast, Inc.) (Internal ribs should run vertically).
- Coroplast extruded thinwall fluted plastic sheet, 4mm (and thicker) (Coroplast, Inc.) (For use as substrate for Warning Reflector only).
- Polyethylene panel, 1/8-inch thickness (Fender Enterprises, Inc.).
- IntePro®10mm extruded thinwall fluted plastic sheet (Inteplast Group Ltd.). (Internal ribs should run perpendicular to support).
- Fiberglass reinforced polycarbonate sign substrate, 5/32-inch thick (International Plastics Corporation).
- ABS acrylic (International Plastics Corporation).
- Endurance™ Sign (Reflexite Corporation).
- Polyplate® Fiberglass reinforced plastic sign panel, 0.135-inch thick. (Sequentia Incorporated).
- Fiber-Brite sign panel, 1/8-inch thick (U.S. Highway Products).
- Survivor (U.S. Highway Products).
- Coro-Lite Corrugated FRP Sign Panel, 0.25 inches thick (U.S. Highway Products).

J. SIGNS AND SIGN SUPPORTS

Signs and sign supports shall comply with *the Barricade and Construction Standards Sheets* (BC Sheets) and the *Texas Manual on Uniform Traffic Control Devices*. Sign supports that are approved for longer terms may be substituted for shorter-term signs (i.e., permanent sign supports may be used instead of short-term sign supports). Mount all signs used at night and all regulatory signs (used at any time) 7 feet above the edge of the travelway (Figure J-1). Non-regulatory signs used only during the day may be mounted at either the 7 or 1-foot mounting height (Figures J-1 and J-2). All signs used shall be retroreflective according to the requirements of the BC Sheets. Sign supports shall be used with the appropriate foundation system.

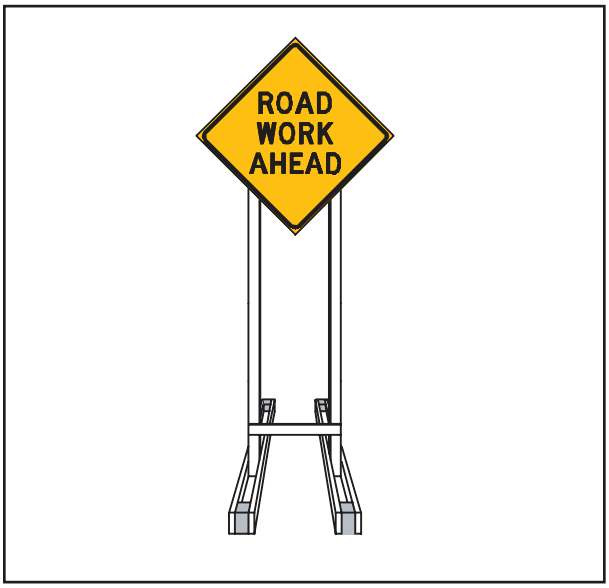

Figure J-1. Long/intermediate-term and regulatory sign mounting

Figure J-2. Short-term duration sign mounting

J.1. Permanent Sign Supports

Refer to the TxDOT's *Sign Mounting Details*.

J.2. Long-Term / Intermediate-Term Work Zone Sign Supports

Signs shall be installed in accordance to manufacturer's instructions. In no case shall the height of the non-breakaway portion of the support (i.e., stub) extend higher than 4 inches from the ground.

J.2.a. Portable Sign Supports

- Wood Dual Leg, skid design. The skid length shall be at least 60 inches in length. Skid length may be increased for wind conditions if space permits. (See BC Standards for assembly details).

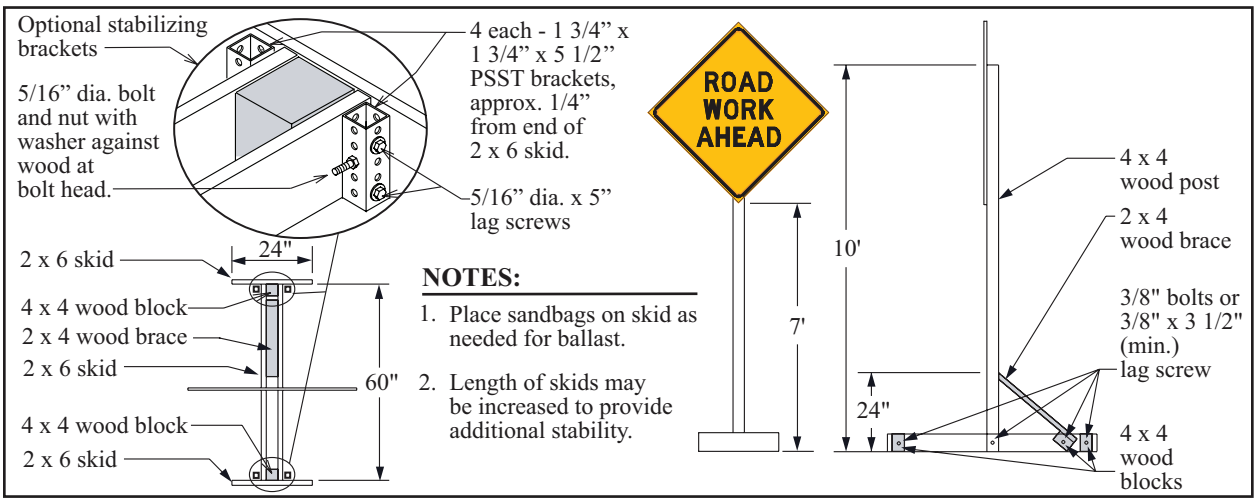

Figure J-3. Wooden long/intermediate-term single leg (H-leg) sign support

- Wood,(H-leg) (Figure J-3). The skid length shall be at least 60 inches in length. Skid length may

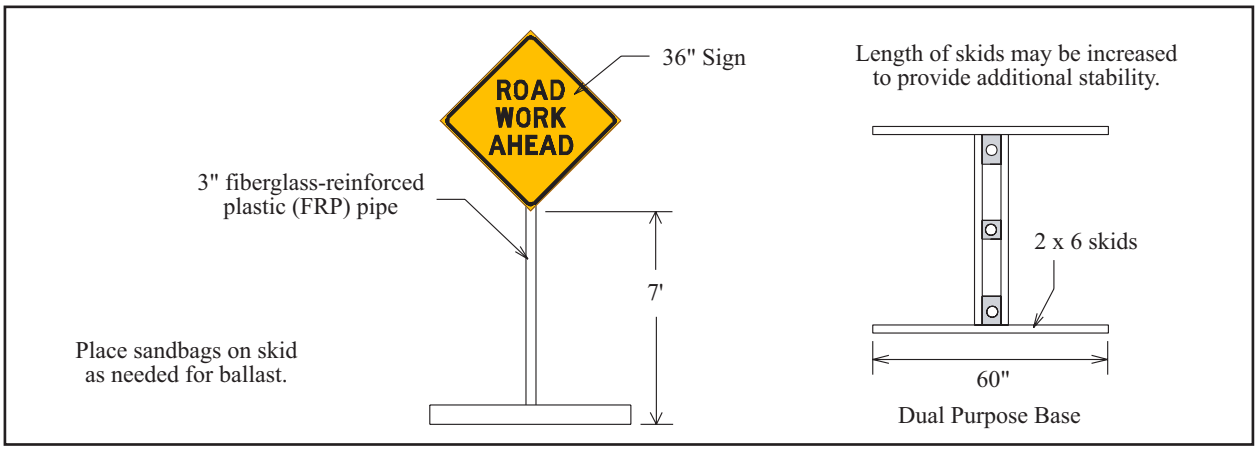

be increased for wind conditions if space permits

Figure J-4. Hwy Com's long/intermediate-term single leg (H-leg) sign support (7 foot mounting height)

- SZ-484-2S Stand for 0.080 aluminum, 3mm and 4mm aluminum composites, roll-up, 10mm and 16mm corrugated plastic substrates (Bone Safety Signs).
- QV-84 (or SE-7) Stand (Cortina Safety Products).
- DF-4700 Stand for roll-up signs (Dicke Tool Company).
- DF-4700TX Stand for roll-up signs (Dicke Tool Company).
- TF84-RGB Sign Stand for Rigid Signs (Dicke Tool Company).
- TF84-RUB Sign Stand for Rollup Signs (Dicke Tool Company).
- X-601 Aluminum Interstate™ Series stand for roll-up signs. (Eastern Metals/USA Sign).
- FRP pipe with dual-purpose base (Figure J-4). (Hwy Com, Inc.).
- SS 560, SS 560 A (Korman Signs, Inc.).
- SS 560 UCA for roll-up signs only (Korman Signs, Inc.).
- 4860K (MDI - Marketing Displays International.).
- Little Buster™ sign stand (TrafFix Devices, Inc.).
- Big Buster™ sign stand (TrafFix Devices, Inc.).

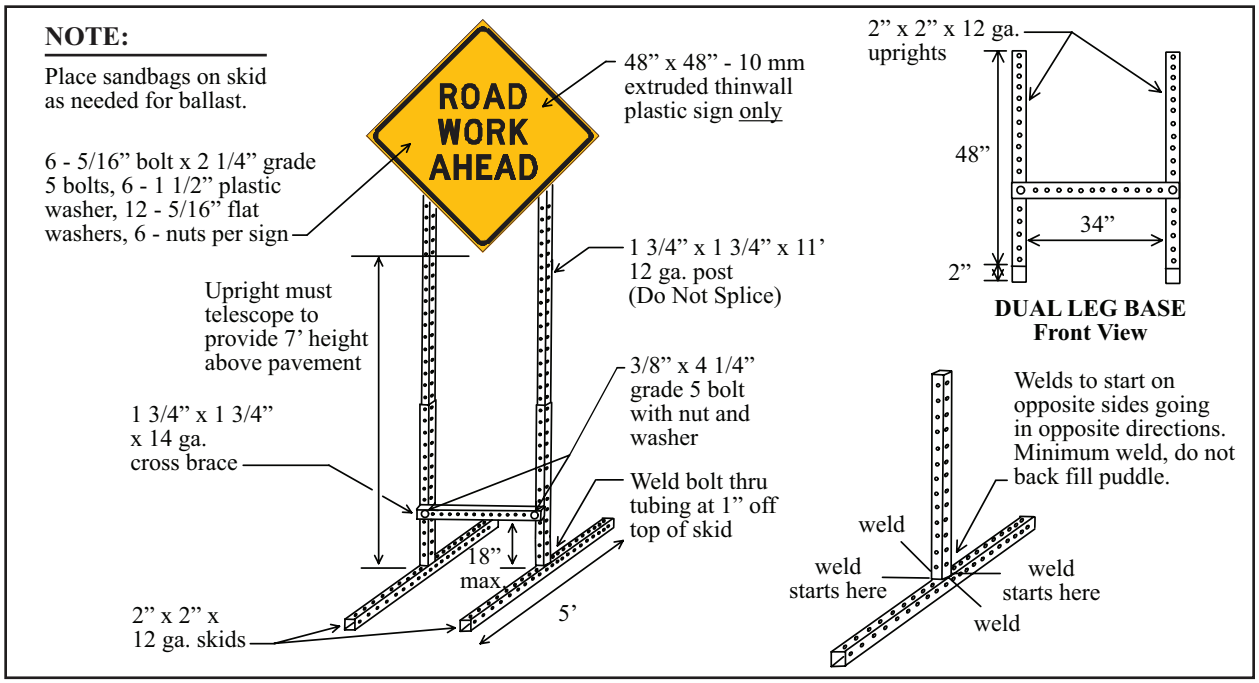

Figure J-4a. Dual Leg PSST skid sign support (7 foot mounting height)

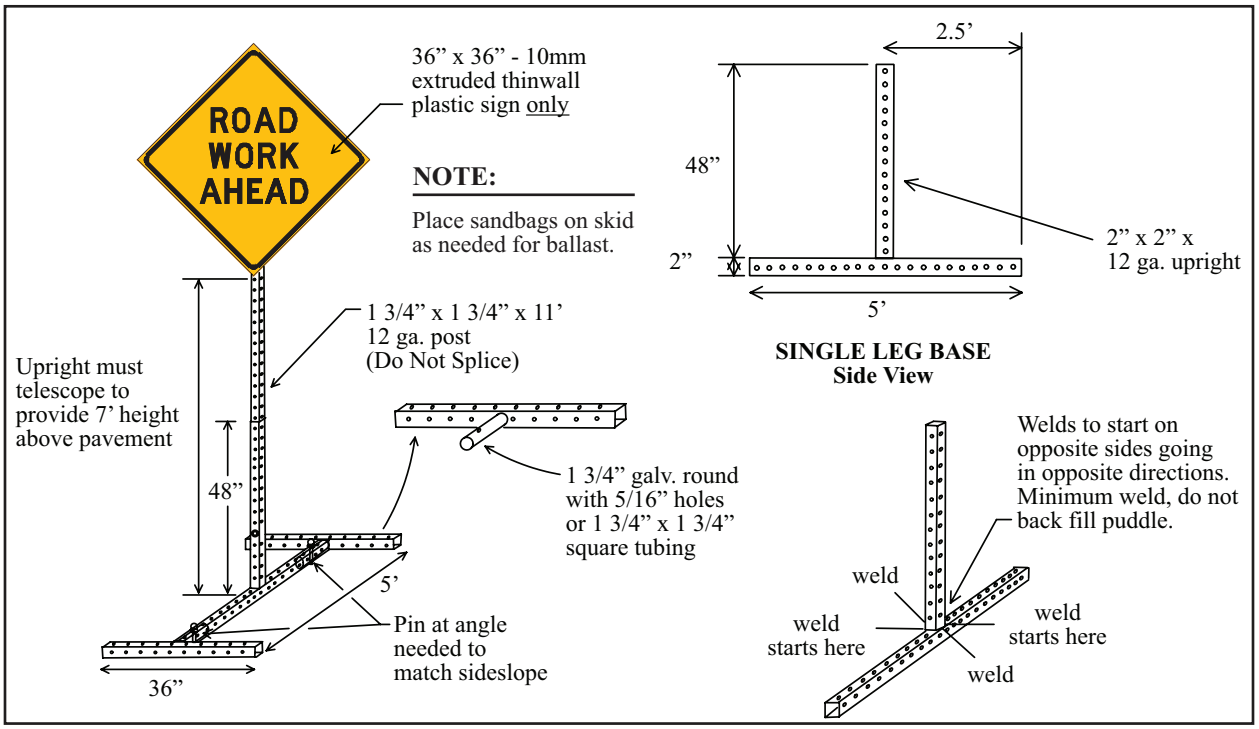

Figure J-4b. Single Leg PSST skid sign support (7 foot mounting height)

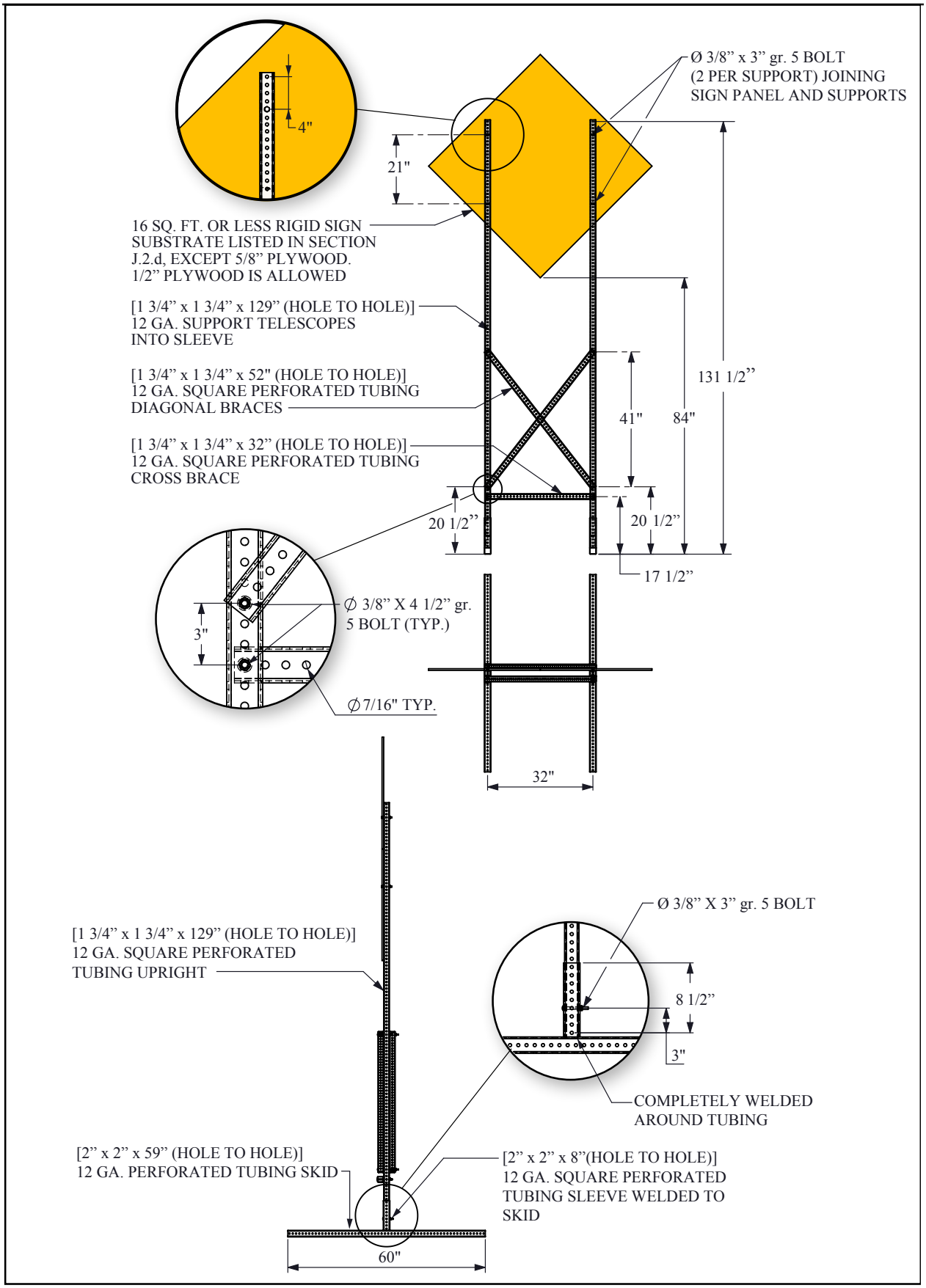

Figure J-4c. Dual Leg PSST skid support for various substrates (7 foot mounting height)

- Square Steel Tubing suppliers.
  - Allied Tube and Conduit Corporation.
  - Centerline Supply, Inc.
  - Fender Enterprises, Inc.
  - Northwest Pipe Co.
  - Maxistrut, Inc.
  - S-Square Tube Products.
  - Ultimate Highway Sales, Inc.
  - Unistrut Corporation.

J.2.b. Post-Type Sign Supports

- Rectangular-timber signposts, No. 2 SYP or equivalent, 4 x 4 or 4 x 6. If 4 x 6 post is used, 1-1/2 inch weakening holes shall be drilled through the wide face at 4 and 18 inches above the ground. The wide face of the post shall be installed parallel with traffic. No more than 2 posts shall be mounted within a 7-foot span. The post shall be embedded into the ground a minimum of 36 inches. This support may be used in both weak and strong soils. The post may be directly embedded or may be embedded in pre-mixed concrete, soilcrete, or approved expanding closed-cell polyurethane foam.
- Quick-Punch® 14-gauge 2-inch square tubing with 7/16-inch die-cut knockouts on 1-inch centers. This support may be directly embedded a minimum of 48 inches in both weak and strong soils. As an option, an anchor stub may be use. The anchor stub is the next larger size tubing (2-1/4 inch). Additionally, an 18-inch reinforcing sleeve made from the next larger size tubing (2-1/2 inch) may be used. The optional anchor stub, when used, shall be embedded at least 34 inches in strong soils or 55 inches in weak soils with approximately 1 inch protruding above the ground (Figure J-5). Both systems may also be set in concrete, soilcrete, or approved expanding polyurethane foam. No more than 2 posts shall be installed within a 7-foot span.
  - Unistrut Corporation.
- Square metal tubing with 7/16-inch holes punched on 1-inch centers. This support may be directly embedded a minimum of 48 inches in both weak and strong soils (Option 1). As an option, an anchor stub may be used. The anchor stub is the next larger size tubing (Option 2). Additionally, an 18-inch reinforcing sleeve made from the next larger size tubing may be used (Option 3). The optional anchor stub, when used, shall be embedded at least 34 inches in strong soils or 55 inches in weak soils with approximately 1 inch protruding above the ground (Figure J-5). Both systems may also be set in concrete, soilcrete, or approved expanding polyurethane foam. The posts may be mounted according to the following table. Any approved sign substrate from Section J.2.d may be used on square metal tubing supports when embedded as per Figure J-5.

Number of Posts in 7 ft Span	14 Gauge	12 Gauge
1 post (directly embedded)	1-3/4, 2, or 2-1/4 inch	1-1/2, 1-3/4, or 2 inch
2 posts (directly embedded)	1-3/4 or 2 inch	1-1/2 or 1-3/4 inch
1 post (with anchor)	1-3/4, 2, or 2-1/4 inch	1-1/2, 1-3/4, 2, or 2-1/4 inch
2 post (with anchor)	1-3/4 or 2 inch	1-1/2, 1-3/4, or 2 inch
3 post (with anchor)	1-3/4 inch	1-1/2 or 1-3/4 inch

  - Allied Tube and Conduit Corporation.
  - Centerline Supply, Inc.
  - Fender Enterprises, Inc.
  - Maxistrut, Inc.
  - Northwest Pipe Company.
  - S-Square Tube Products.
  - Ultimate Highway Sales, Inc.
  - Unistrut Corporation
- Base-bolted sign post system using Franklin Flanged Channel (Figure J-6). Only one 4.0 lb/ft or up to three 2.0, 2.5, or 3.0 lb/ft posts may be installed within a 7-foot span. Posts must be embedded a minimum of 38 inches in strong soil or 60 inches in weak soil. When installed in weak soil, soil plate supplied by manufacturer must be used.
  - Franklin Industries.

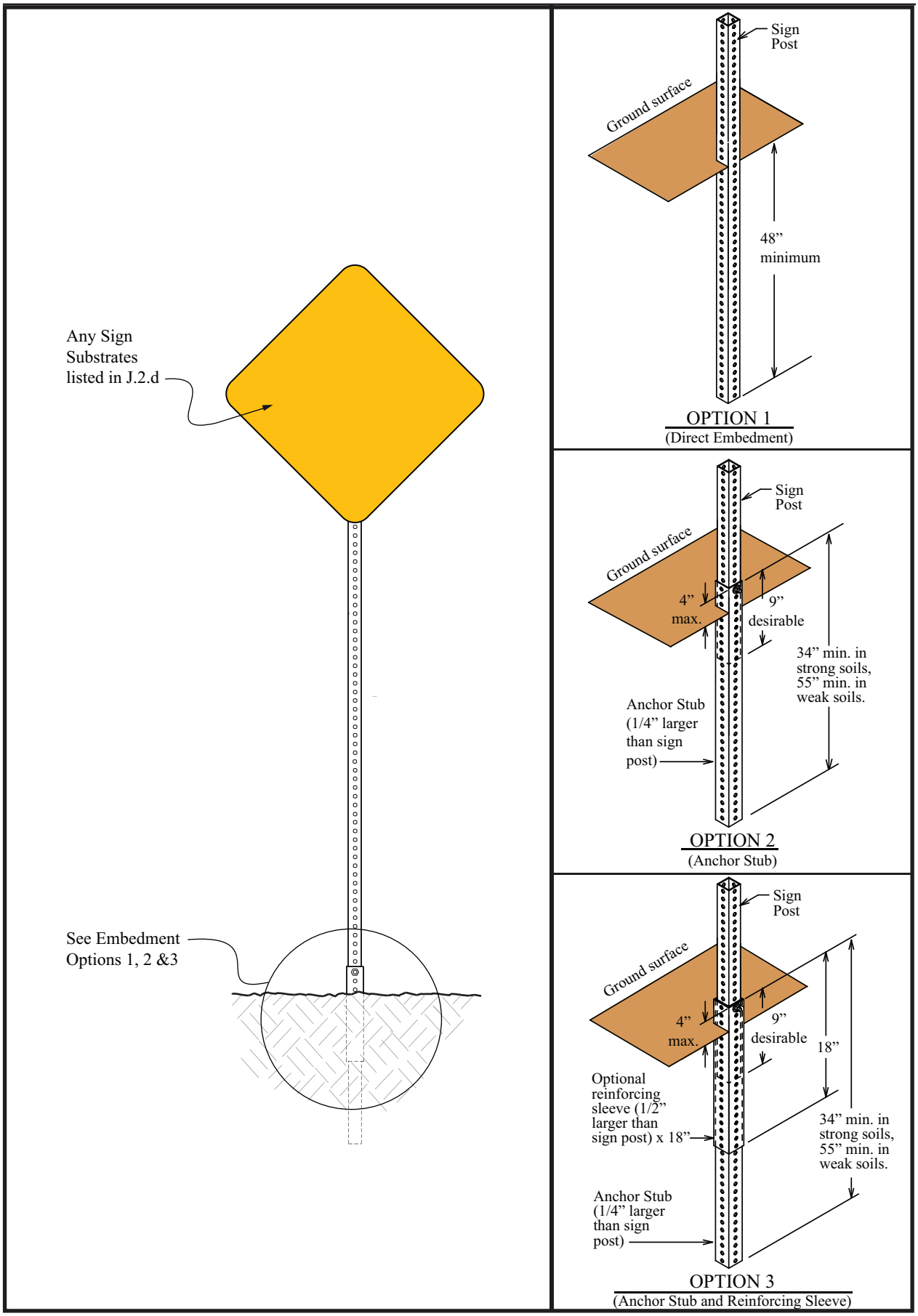

Figure J-5. Perforated square metal tubing with anchor

- S-Q Post Square Slipbase Sign Support System may be installed using the same foundation used by the Texas Triangular Slipbase Sign Support System. Refer to SMD (SLIP-1) or manufacturer recommendations for installation procedures.
  - Northwest Pipe Company.
- Fiberglass reinforced plastic (FRP) pipe may be directly embedded or may be anchored with the Universal Anchor System. No more than 2 posts shall be installed within a 7-foot span. The anchor, if used, should be set in concrete or expanding polyurethane foam. Anchor shall protrude no more than 4 inches from the ground. As an option, the post (without the anchor) may be set in concrete, soilcrete, or approved expanding polyurethane foam.
  - Hwy Com, Inc.
  - Universal Anchor Systems, L.L.C.
- Lap Splice™ U-Channel Breakaway System using either 3.0 lb/ft or 4.0 lb/ft Marion Steel Rib-Bak U-Channel Posts (Figure J-6). No more than 3 posts shall be mounted within a 7-foot span. The post shall be embedded into the ground a minimum of 36 inches. This support may be directly embedded in both weak and strong soils, however if the 4.0 lb/ft is used in weak soil, a soil plate must be used.
  - Marion Steel

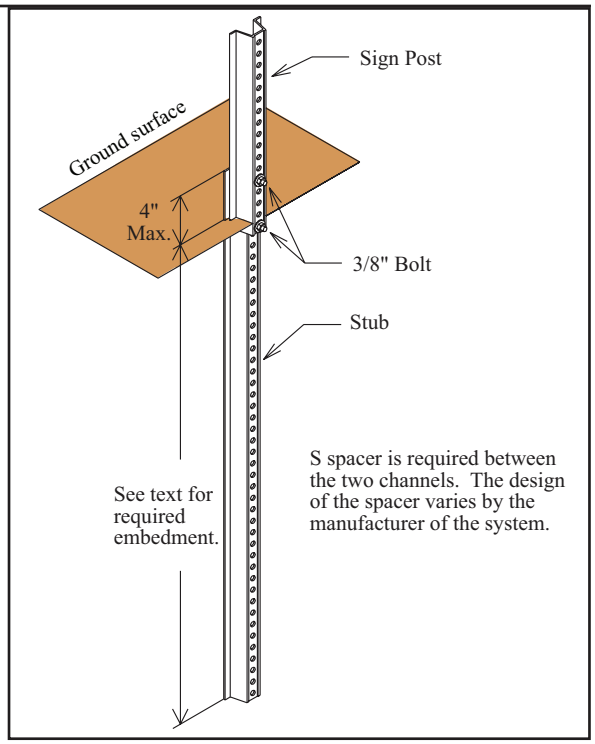

Figure J-6. Lap-splice/base bolted anchor

- CP40 composite post, 2-3/8, 2-7/8, or 4 inch outside diameter, manufactured of unsaturated polyester or epoxy resin reinforced with E-glass and filled with a filler material to give the posts a strength equal to that of Schedule 40 steel pipe of equal diameter. Post shall be used only in strong soil and shall be embedded a minimum of 45 inches. No more than 2 posts may be installed in a 7-foot span. Post may be directly embedded or set in concrete, soilcrete, or approved expanding polyurethane foam.
  - Lancaster Composite
- NEX™ 12 or 14-gauge 2-inch "octagonal" tubing. This support may be directly embedded a minimum of 36 inches in both weak and strong soils. As an option, an anchor stub may be use. The anchor system utilizes a 2-1/2 inch square tube at least 34.5 inches in length and wedge. This system may also be set in concrete, soilcrete, or approved expanding polyurethane foam. No more than 2 posts shall be installed within a 7-foot span.
  - S-Square Tube Products
- Slip Safe™ U-Channel Slip Base System using either 3.0 lb/ft or 4.0 lb/ft Marion Steel Rib-Bak U-Channel Posts mounted as single post or back-to-back post supports. No more than 3 supports shall be mounted within a 7-foot span. This support may be directly embedded in both weak and strong soils, however in weak soil, the post shall be embedded into the ground a minimum of 30 inches and a soil plate must be used.
  - Marion Steel.
- Tubing, circular metal, 2-3/8 inches diameter with 0.080 or 0.095 inch wall thickness (a.k.a. thin wall) used with Poz-Loc Wedge and Socket Foundation. Socket may be used as driveable base in strong and weak soil and it may be set in concrete or approved expanding polyurethane foam.
  - Northwest Pipe Company.
- Type "L" 14-7/8 x 7-7/8 inch and Type "M" 7-7/8 x 7-7/8 inch Microlam® Laminated Veneer Lumber post with 1-1/4 inch wall thickness. The post shall be weakened by four 1-inch holes drilled through each side of the post that is parallel to the direction of travel. Two holes should be drilled at 18 inches above ground and two more at 3 inches above ground. Each hole of the top pair should be centered either 3 inches or 5 inches from the edge for the Type "M" or the Type "L" post, respectively. Each hole of lower pair should be centered 3 inch from the edge for both posts.
  - Trus Joist MacMillan.

- V-Loc™ Socket System - This system may be used to anchor thin-wall round tubing and 2-inch square tubing in standard soil. With an adapter, the anchor can also be used with U-channel. The anchor shall be driven flush with the ground (30-inch embedment depth). The anchor may also be set in concrete or expanding polyurethane foam.
    - TAPCO - Traffic & Parking Control Co., Inc.
- Type 2 PCTB Sign Support Assembly. This system uses Schedule 80 pipe to support signs at 7' high by connecting the upright at the connection point between two 30' Type 2 Portable concrete barriers. Necessary details for fabrication of this system are located in Appendix B of this document.

J.2.c. Removed – See Appendix A

J.2.d. Substrates for Use on Long-Term / Intermediate-Term Sign Supports

Any of the substrates may be used for Long-term / Intermediate-term supports except where specifically noted or where a manufactured sign support would require user modification to allow the use of the substrate.

- Plywood, 1/2" or 5/8" thick. Marine grade, CCA pressure-treated, CDX or similar plywood with water resistant glue. Paint all wood surfaces white if not covered by reflective sheeting. in accordance with
- Sheet Aluminum conforming to *DMS-7110, Aluminum Sign Blanks.*
- Roll-Up Signs conforming to *DMS-8310, Flexible Roll-Up Reflective Signs.*
- Dibond, 2 mm thick composite substrate (Alcan Composites USA)
- Bone Light ACM, 3mm and 4 mm composite substrate (Bone Safety Signs).
- Coroplast 10mm and 16mm extruded thinwall fluted plastic sheet (Coroplast, Inc.) (Internal ribs should run perpendicular to support).
- EcoStrate (E5) Composite traffic sign blanks 0.25" (EcoStrate SFS, Inc.).
- IntePro®10mm and 16mm extruded thinwall fluted plastic sheet (Inteplast Group Ltd.) (Internal ribs should run perpendicular to support).
- InteCell® 13 to 16 mm integral skin expanded foam PVC sheet. (Inteplast Group, Ltd.).
- Alpolic® composite sign substrate (Mitsubishi Chemical).
- Endurance™ Sign (Reflexite Corporation).
- Reynobond PE, 3 to 6 mm thick composite substrate (Reynolds Metal Company).
- Reynolite, 2 mm thick composite substrate (Reynolds Metal Company).
- Polyplate® Fiberglass-Reinforced Plastic Sign Panel, 0.135 inches thick. (Sequentia Incorporated).
- Coro-Lite Corrugated FRP Sign Panel, 0.25 inches thick (US Highway Products).
- Fiber-Brite Fiberglass-Reinforced Plastic Sign Panel, 0.135 inches thick (US Highway Products).
- Work Area Protection Part #48SB high-density polyethylene 0.625" thick (Work Area Protection Corp).

J.3. Short-Term / Short-Duration Work Zone Sign Supports

J.3.a. Short-Term / Short-Duration Portable Sign Supports

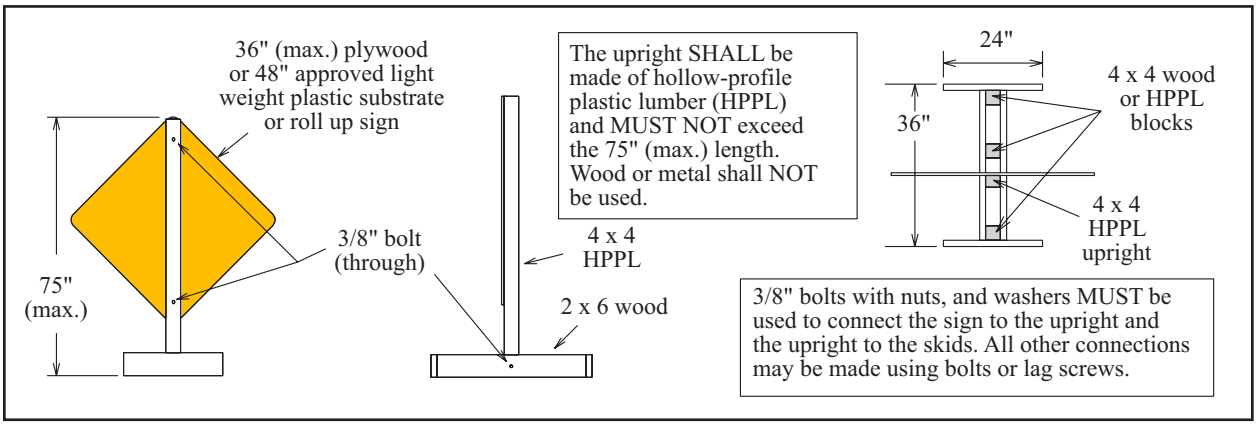

Figure J-7. Wood & HPPL short-term/short-duration H-leg sign support (1 foot mounting height)

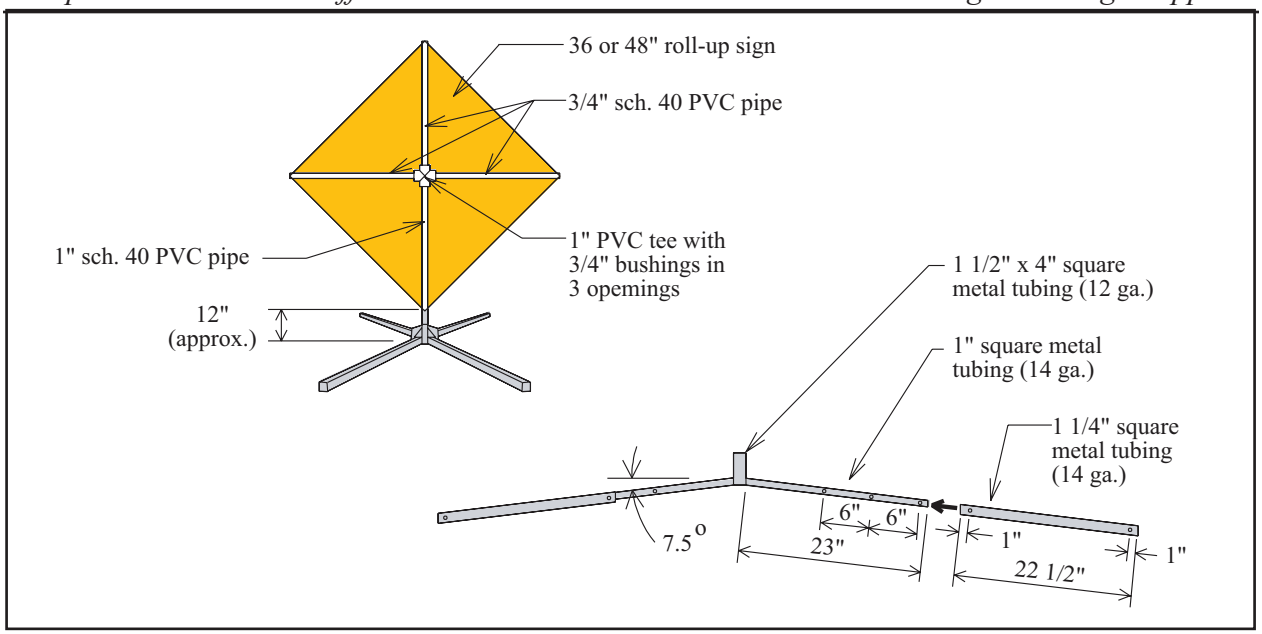

Figure J-8. Barricades Unlimited sign support

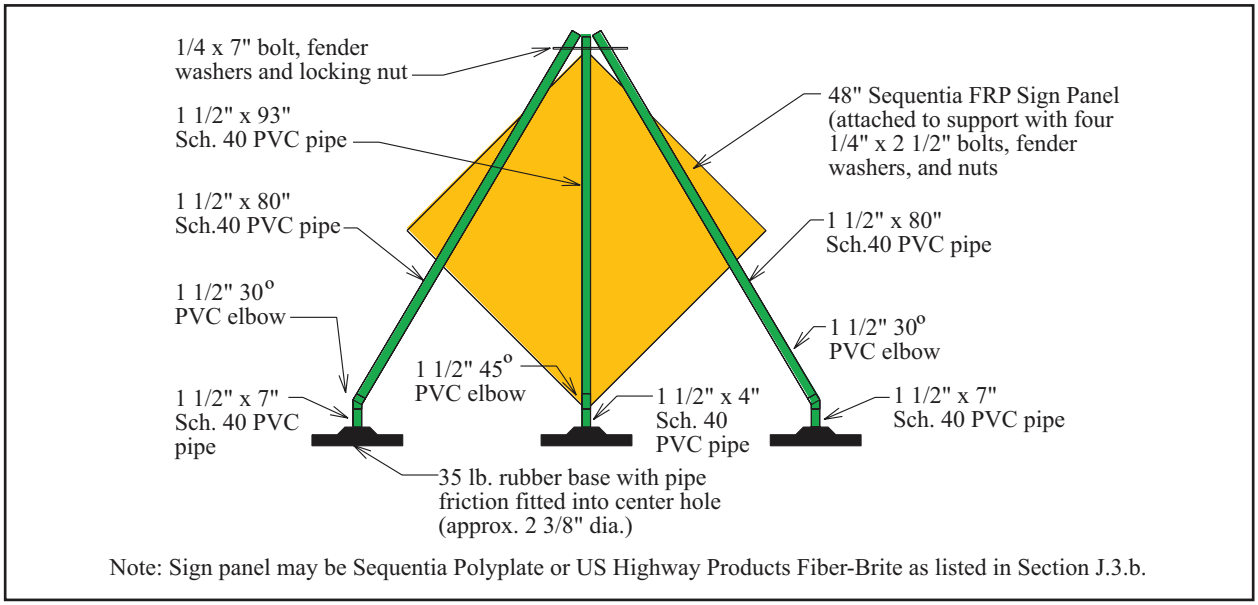

Note: Sign panel may be Sequentia Polyplate or US Highway Products Fiber-Brite as listed in Section J.3.b.

Figure J-9. JB Witt PVC sign support

- H-leg sign support (Figure J-7). This is the only short-term/short-duration sign support for which plywood may be used as a sign substrate. The plywood shall be 36 inches square by 1/2-inch thick.

Slight variations to this support are not considered crashworthy. Strict adherence to the dimensions shown in the drawing below is required.

- Barricades Unlimited sign support (Figure J-8.)
- JB Witt PVC sign stand (Figure J-9) with Polyplate (Sequentia) or Fiber-bright (US Highway Products) sign panel.
- AccuForm Signs
  - FRC786 Single Spring Tilt-Adjust Roll-up Sign Stand
  - FRC750 Springless Tilt-Adjust Roll-up Sign Stand
- Bone Safety Signs
  - SZ-412 and SZ-412-S Stands for roll-up signs.

- SZ-412-2S Stand for 48” x 48” x .080” aluminum, 4 mm or thinner aluminum composite material, corrugated plastic, extruded plastic, vinyl roll-up signs.
- SZ-484 Stand for roll-up signs.
- SZ-RBS Stand for roll-up signs.

❖ Cortina Safety Products.
- Quadra Flex V™ Models QFV and QFV-W.
- Quadra Lite V™ Models QLV and QLV-W.

❖ Dicke Tool Company
- DL1000W Stand for roll-up signs.
- DL1003W Stand for roll-up signs.
- DF3000S Fold & Roll Stand for roll-up signs.
- DF3000W Stand for roll-up signs.
- DF3003W Stand for roll-up signs.
- SDL1000L Stand for roll-up signs.
- TF-12C Stand for roll-up signs.
- TF-12W Stand for roll-up signs.
- TF-18 Stand for 0.080” Aluminum, Endurance, Alpolic and roll-up signs.
- UF2000 Stand for roll-up signs.

❖ Eastern Metals/USA Sign.
- C-102 High Performance Stand for roll-up signs.
- C-132 High Performance Stand for roll-up signs.
- C-142 High Performance Stand for roll-up signs.
- C-200 Steel Super-Flex Compact Stand for roll-up signs.
- C-202 Steel Super-Flex Compact Stand for roll-up signs.
- C-232 Steel Super-Flex Compact Stand for roll-up signs.
- C-242 Steel Super-Flex Compact Stand for roll-up signs
- C-301 Steel Compact C- Stand for roll-up signs
- C-601 Aluminum Compact C-Stand for roll-up signs.
- C-801 Aluminum Compact C-Stand for roll-up signs.
- E-350 Econo Stand for Endurance™, 10mm Coroplast, or 10mm IntePro® substrates (see Section J.3.b). (Internal ribs should run perpendicular to support). 2.0mm (.080") aluminum (48" x 48" or smaller), 6.35mm solid ABS plastic (48" x 48" or smaller), 2mm or smaller Alusuisse Dibond, Mitsubishi Alpolc, Reynolds Reynolite or equal AL/LDPE laminated.
- E-380 Econo Stand for roll-up signs.
- C-902 Aluminum Super-Flex Compact Stand for roll-up signs.
- C-942 Aluminum Super-Flex Compact Stand for roll-up signs.
- X-501 Aluminum Interstate™ Series Stand for roll-up signs.
- X-551 Steel Interstate™ Series Stand for roll-up signs and the Work Area Protection Part #48SB high-density polyethylene 0.625" thick (Work Area Protection Corp.).
- X-552 Steel Interstate™ Series Stand for Endurance™, 10mm Coroplast, or 10mm IntePro® substrates (see Section J.3.b), 2.0mm (.080") aluminum (48" x 48", 48" x 60" or smaller), or 2mm AL/LDPE laminated, or Alcan Dibond 2 mm and the Work Area Protection Part #48SB high-density polyethylene 0.625" thick (Work Area Protection Corp.).
- X-602 Aluminum Interstate™ Series stand for Endurance™, 10mm Coroplast, or 10mm IntePro® substrates (see Section J.2.d). (Eastern Metals/USA Sign). 48" x 48", 48" x 60" or smaller, 2.0mm (.080") aluminum, 6.35mm solid ABS plastic, 2mm AL/LDPE laminated, Alcan Dibond 2mm or 16mm (5/8") plywood and the Work Area Protection Part #48SB high-density polyethylene 0.625" thick (Work Area Protection Corp.).
- X-841 Series X-Stand™ for roll-up signs.
- X-842 Series X-Stand™ for Endurance™, 10mm Coroplast, or 10mm IntePro® or Alcan Dibond 2mm substrates (see Section J.3.b.)
- MBC-12 and MBC-15 Interstate™ X-Stand Median Barrier Clamp for use with X-501 and X-551 supports above.

❖ Impact Recovery Systems, Inc.
- IRS® - Part #350 one base portable sign stand with Universal bracket.

❖ Hwy Com, Inc.

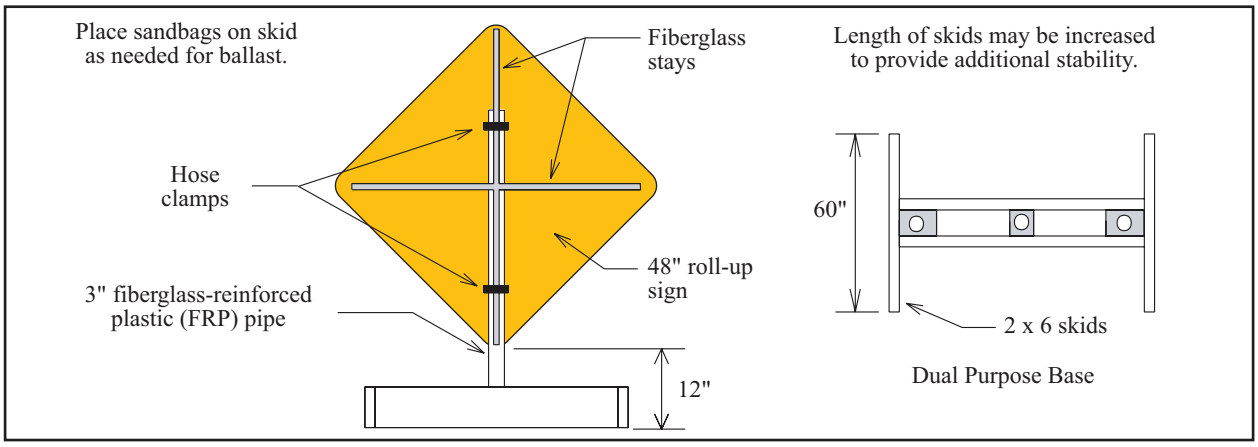

Figure J-10. Hwy Com's short-term H-leg sign support (1 foot mounting height)

- FRP pipe with dual-purpose base (Figure J-10).

- Korman Signs, Inc.
  - SS 1 with roll-up, Alpolic or Alcan Dibond 2mm signs.
  - SS 548, SS 548 A, SS 548 C, or SS 548 CA with roll-up or Alpolic signs.
  - SS 548 UC, SS 548 UCR, SS 548 UCA, or SS 548 UCRA with roll-up signs only.
  - SS548AE, SS548CE, SS548CAE with roll-up or Alpolic signs.
- Lang Products International, Inc.
  - Basic™ 36 Portable Traffic Sign Stand.
  - Basic™ 48 Portable Traffic Sign Stand.
  - CrossWind™ 204-HD Portable Traffic Sign Stand.
  - LTT-1 Portable Traffic Sign Stand using ½" thick MDO plywood at a height of 12" to the bottom of the sign.
- MDI - Marketing Displays International.
  - 30CAM SteelMaster® Stand for roll-up signs.
  - 40CAM SteelMaster® Stand for roll-up signs.
  - 50SM SteelMaster® Stand for roll-up signs.
  - 4814DLK WindMaster® Stand for roll-up signs.
  - 4814HDK WindMaster® Stand for roll-up signs.
  - 4818K WindMaster® Stand for roll-up signs.
- TrafFix Devices, Inc.
  - Econo Buster folding leg sign stand.
  - Little Buster™ Stand for roll-up signs.
  - Quad-Drop Sign Stand for roll-up signs.
  - Step'N Drop Stand for roll-up signs.
  - Zepher™ Stand for roll-up signs.
- Work Zone Safety Products
  - Econo-Brother sign stand for roll-up signs.

J.3.b. Substrates for Signs Used on Short-Term / Short-Duration Sign Supports

- The following substrate may be used with all short-term / short-duration sign supports:
  - Roll-up signs conforming to DMS-8310, Flexible Roll-Up Reflective Signs.
  - Coroplast 10mm extruded thinwall fluted plastic sheet (Coroplast, Inc.) (Internal ribs should run perpendicular to support).
  - IntePro®10mm extruded thinwall fluted plastic sheet (Inteplast Group Ltd.) (Internal ribs should run perpendicular to support).

- Endurance™ Sign (Reflexite Corporation).
- Safe Sign 350 rigid plastic sign panel (TrafFix Devices, Inc.) (Internal ribs should run perpendicular to support).

❖ The following substrate may be used with short-term/short-duration sign supports.

ONLY WHEN NOTED.

- Plywood, 1/2-inch thick. Marine grade, CCA pressure-treated, CDX or similar plywood with water-resistant glue. Paint all wood surfaces white if not covered by reflective sheeting.
- Alpolic® composite sign substrate (Mitsubishi Chemical).
- Polyplate® Fiberglass Reinforced Plastic Sign Panel, 0.135 inches thick (Sequentia Incorporated).
- Fiber-Brite sign panel, 1/8-inch thick (U.S. Highway Products).
- Dibond 2mm composite (Alcan Composites USA.).
- Bone Light Aluminum Composite Material 3mm or 4 mm (Bone Safety Signs).
- Sheet Aluminum 0.080” thick conforming to DMS-7110, Aluminum Sign Blanks.

K. TEMPORARY MAILBOXES

❖ Attached to plastic drum as shown on this page and on the Maintenance Division Mail Box (MB) standard drawings. MB Standards can be found on-line at *www.txdot.gov/business/disclaim.htm.*

Each temporary mailbox shall be mounted on an approved plastic drum (see Section I). Only one #1, #1½, or #2 mailbox may be installed on any one drum. The mailbox shall be mounted using the standard TxDOT mailbox-mounting bracket in the manner shown in Figures K-1, K-2, and K-3.

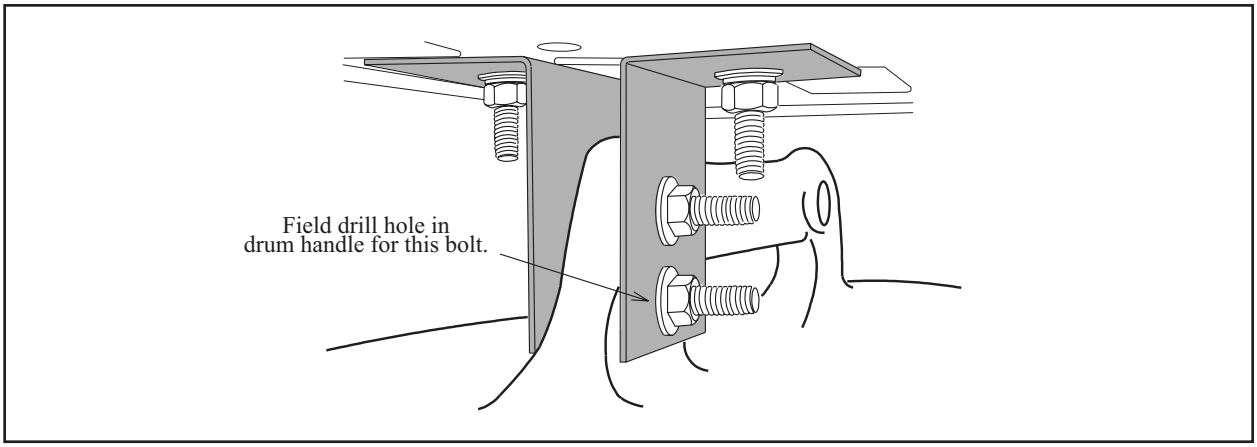

Figure K-1. Mailbox bracket to drum connection detail

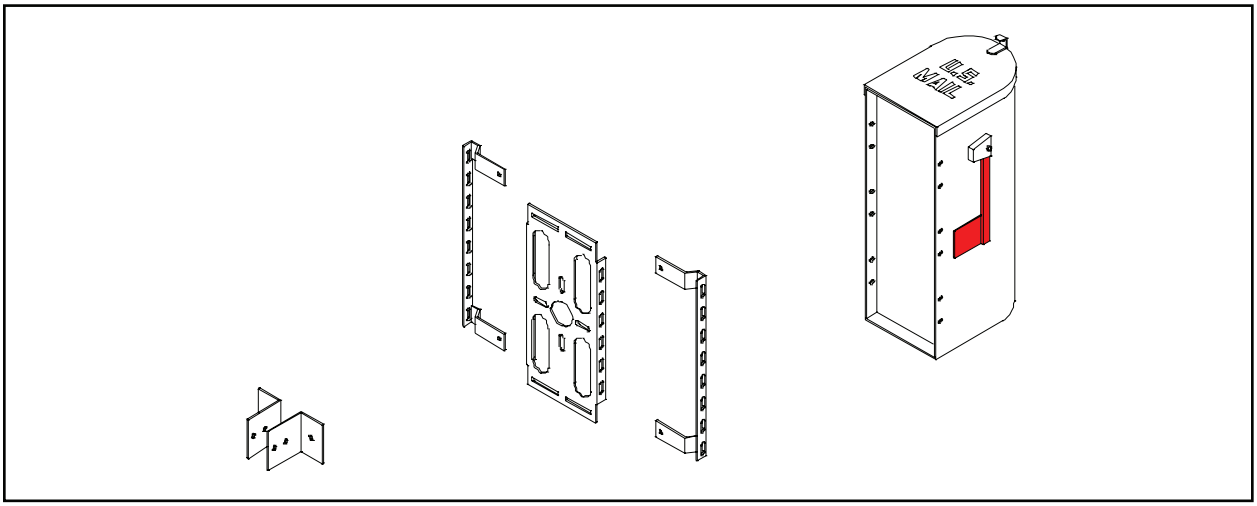

Figure K-2. Mailbox bracket to mailbox connection detail

The mounting kit consists of a mounting bracket, two angle brackets, and two bracket extenders. No bracket extenders are required for the #1 mailbox. The #1½ and #2 mailboxes require one and two bracket extenders, respectively. The bracket and components are constructed of 14-gage galvanized steel. Any components whose strength appears to compromised due to rusting or corrosion shall not be used.

The bracket is attached to the mailbox with six ¼-inch screws with two flat washers and one nut per screw. Screws shall be distributed evenly to maximize the "attached area."

The bracket extenders are attached to the bracket with two or four 1/4-inch carriage bolts (as required) with a flat washer, a lock washer, and a nut for each bolt.

The angles are attached to the bracket and the drum using 3/8-inch bolts with two flat washers and one nut per bolt.

Bolts and screws shall be of sufficient length so all threads of the corresponding nut are engaged after

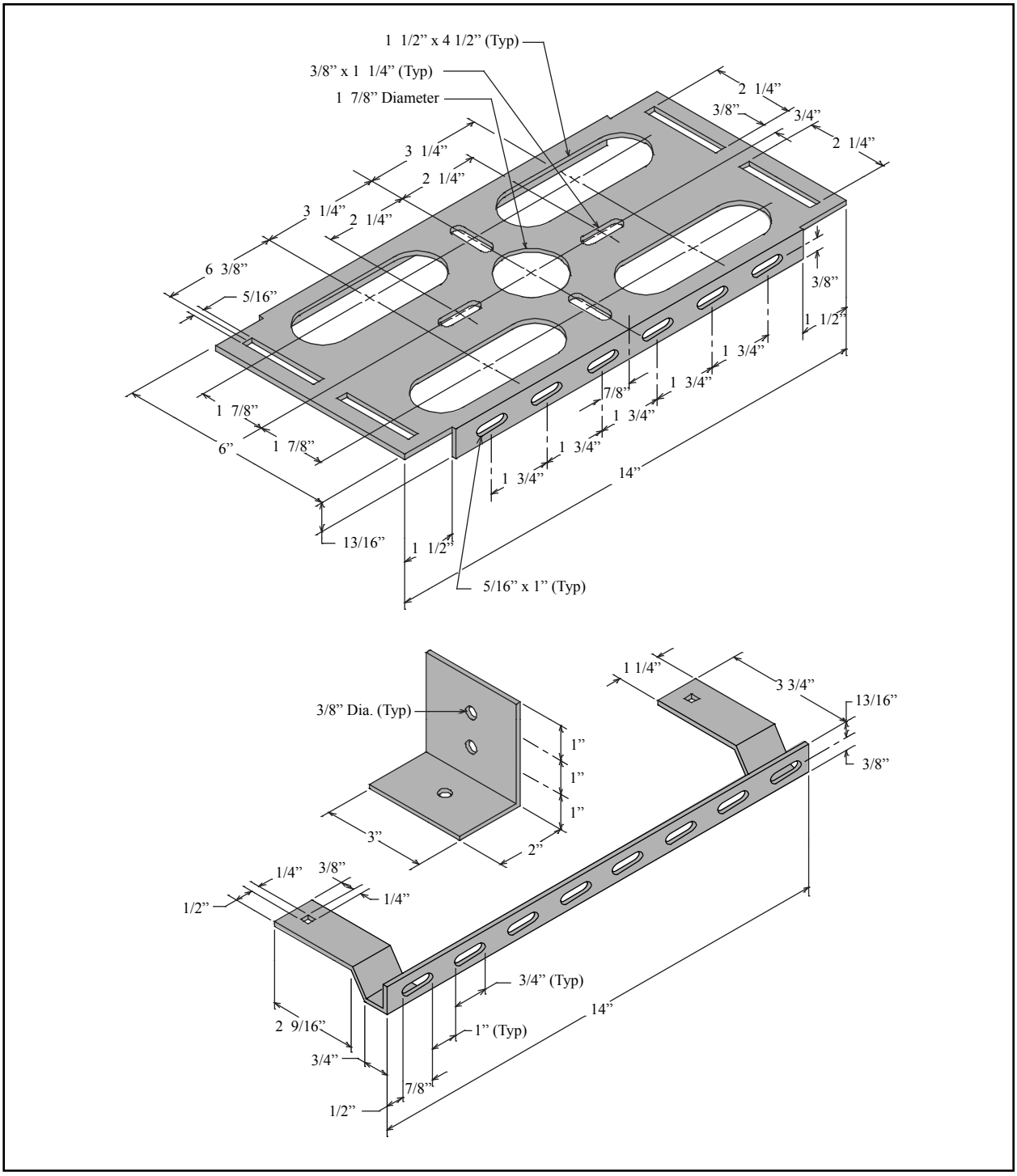

installation.

Figure K-3. Mailbox bracket dimensions

- Pre-assembled mailbox unit.
  - IRS® - Part #360 one base temporary mailbox.

- Temporary mailboxes may be installed on permanent supports as detailed on the Maintenance Division Mail Box (MB) standard drawings. MB Standards can be found on-line at *http://www.txdot.gov/business/disclaim.htm*

L. TRUCK-MOUNTED PROTECTIVE DEVICES

L.1. Truck-Mounted Attenuators (TMAs) and Trailer Attenuators (TAs)

TMAs and TAs used on TxDOT facilities must be NCHRP 350 or MASH compliant. Level 2 compliant TMAs are approved for use only on roadways with regulatory speed limits of 45 mph or less. Level 3 compliant TMAs may be used on any TxDOT facility. The host vehicle for the TMA and TA shall weigh a minimum of 19,000 pounds. *Host vehicles may be ballasted to achieve the required weight. Any weight added to the host vehicle shall be properly attached or contained within it so that it does not present a hazard, and that proper energy dissipation occurs if the attenuator is impacted from behind by a large truck. The weight of a TA shall not be considered in the weight of the host vehicle but the weight of a TMA may be included in the weight of the host vehicle. Attachment of TMA shall be in accordance with manufacturer's recommendations.

- Test Level 3 Compliant
  - U-MAD Cushion 100K Impact TMA (Barrier Systems, Inc.).
  - U-MAD 100k Trailer TA (Barrier Systems, Inc.).
  - Alpha 100K (Energy Absorption Systems, Inc.).
  - SAFE-STOP™ (Energy Absorption Systems, Inc.).
  - SAFE-STOP™ 180 TMA (Energy Absorption Systems, Inc.).
  - SAFE-STOP™ Trailer TA (Energy Absorption Systems, Inc.).
  - Vorteq TL-3 Trailer TMA (Energy Absorption Systems, Inc.).
  - Scorpion TA (17.3' long) (TrafFix Devices, Inc.).
  - TTMA-100 TA (Gregory Industries, Inc.).
  - RAM 100K (Renco, Inc.).
  - Scorpion C 10000 (TrafFix Devices, Inc.).
  - SS90 HD TMA (Trinity Highway Products).
  - MPS 350 III TMA (Trinity Higway Products).
  - MPS 350 X TMA (Trinity Higway Products).
  - Blade TMA (Verdegro USA LLC).

- Test Level 2 Compliant
  - U-MAD 70k TA (Barrier Systems, Inc.).
  - Alpha 70K (Energy Absorption Systems, Inc.).
  - Ren-Gard 815 (Renco, Inc.).
  - Scorpion A 10000 (TrafFix Devices, Inc.).

L.2. Truck-Mounted Barriers

- Test Level 3 Compliant
  - MBT-1 Mobile Barriers Trailer (Mobile Barriers, LLC

* Note: The minimum 19,000-pound weight requirement for the host vehicle applies to projects let in January 2018 and later. Projects let prior this may use a host vehicle weight that is recommended by the TMA manufacturer. If the contractor chooses to use a lighter vehicle to mount TMA, then the contractor is responsible for following the TMA manufacturer's recommendations and for being aware of the effects that a lighter vehicle will have on the roll-ahead distance and on the driver of the shadow vehicle.

THIS PAGE
INTENTIONALLY
LEFT BLANK

M. PORTABLE TRAFFIC SIGNALS

Portable Traffic Signals (PTS) are not required to be NCHRP 350 or MASH compliant at this time. The traffic signals listed below are approved for use on TxDOT facilities based on operational requirements only. Before installing any PTS in a work zone, each location should be:

1) engineered to ensure there is adequate line of sight between the units and any driveway or cross-street within the work zone.
2) field verified to ensure radio communication for proper operation prior to deploying the portable traffic signal.

- All-Star Traffic Control System - QPB RF 1000 (International Traffic Systems - Texas, Inc.).
- PTS 2000 portable traffic signal (ADDCO Manufacturing Co.).
- Horizon SQ3TS (Horizon Signal Technologies).
- OMJC Pop-up NEMA Wireless Portable Traffic Control Signal Models PNW-234 and QPNW-234 (OMJC Signal, Inc.).
- OMJC Pop-up LD 2070 Portable Traffic Signal System (OMJC Signal, Inc).
- OMJC Work Zone MicroForce DC-Portable Traffic Signal System (OMJC Signal, Inc).
- GEN2-Model PTL 2.4x (North America Traffic, Inc.) for use with 0.6 miles or less distance between units.
- Ver-Mac TLA-3612 Portable Traffic Signal System (Ver-Mac Signal Technologies, Inc.).

THIS PAGE
INTENTIONALLY
LEFT BLANK

N. GLARE SCREEN

Glare screens serve to block the vehicle headlight on cross median barriers for both permanent and temporary applications. They create a visible shield across the barrier. Glare screens also provide delineation for barriers used in the work zone.

- Carsonite Glare Screen (Carsonite International).
- SAFE-HIT® Glare Screen System (Safe-Hit Corporation).
- Plasticade Modular Glare Screen (Plasticade Products).

THIS PAGE
INTENTIONALLY
LEFT BLANK

O. END TREATMENTS FOR CTB

- Single Guardrail Terminal
  - SKT 350 (Road Systems, Inc./Interstate Steel).
  - ET-2000 Plus (Trinity Industries, Inc.).
- Single Sided Crash Cushion
  - BEAT-SSCC (Road Systems, Inc./Interstate Steel).
- Crash Cushion Attenuating Terminal
  - CATGR (Guardrail or Concrete Barrier) (Trinity Industries, Inc.).
- Brakemaster System Terminal
  - BRST (Energy Absorption Systems, Inc.).
- Quadguard II System
  - QUAD (Narrow or Wide) (Energy Absorption Systems, Inc.).
- Quadguard Elite System
  - QGELITE (Narrow or Wide) (Energy Absorption Systems, Inc.).
- Quest System
  - Quest (Wide) (Energy Absorption Systems, Inc.).
- Reusable Energy Absorbing Terminal
  - REACT 350 (Narrow or Wide) (Energy Absorption Systems, Inc.).
- Smart Cushion
  - SMTC (Narrow and Wide) SCI Products Inc./Work Area Protection Corp.
- Trinity Attenuating Crash Cushion
  - TRACC (Trinity Industries, Inc.).
  - FASTRACC (Trinity Industries, Inc.).
  - SHORTRACC (Trinity Industries, Inc.).
  - WIDE TRACC (Trinity Industries, Inc.).
- Absorb 350 (water filled).
  - Absorb 350 (Barrier Systems).
- TAU-II
  - TAU-II (Barrier Systems, Inc.).
- (VIA) Sand Filled Plastic Modules
  - Energy Absorption Systems.
  - CrashGard Sand Barrel System (Plastic Safety Systems, Inc.).
- ACZ 350 System
  - ACZ (350) (Work zone use only) (Energy Absorption Systems)
- Hybrid Energy Absorbing Reusable Terminal
  - HEART (Trinity Industries, Inc.)
- Sentry Longitudinal Energy Dissipater
  - SLED Crash Cushion (TrafFix Devices)

THIS PAGE
INTENTIONALLY
LEFT BLANK

P. TRAFFIC BARRIERS

TL2	**Approved at NCHRP 350 and / or MASH Test Level 2 for roads with speeds of 45 mph or less.**
TL3	**Approved at NCHRP 350 and / or MASH Test Level 3 for high speed roadways.**

P.1. Concrete Barriers

Refer to the Design Division Roadway Standards web page under heading "BARRIERS (RIGID)" for acceptable concrete barrier designs.

P.2. Steel Barriers

The following barriers systems are acceptable for use if requested by a TxDOT district and details of the system are in the plans, signed and sealed by a Texas Professional Engineer.

- Barrier Systems Inc.
  - ArmorGuard Movable Steel Barrier (TL 3).
  - Orion Portable Steel Barrier (TL 3).
- Energy Absorption Sytems
  - Vulcan Barrier @ Gate System (TL3).
- Highway Care
  - Barrier Guard 800 (TL3).
- Hill & Smith, Inc.
  - Zoneguard (TL3).

P.3. Water Filled Barriers

- Armorcast Products Co.
  - Guardian Safety Barriers with 350 kit (TL 3).
- Energy Absorption Systems.
  - Triton Barrier (TL 2).
  - Triton Barrier with pedestals (TL 3).
- Safety Barriers, Inc.
  - Model SB-1-TL (TL 2).
- TrafFix Devices Inc.
  - Sentry Water-Cable, Barrier (TL 3).
- TrafFix Devices Inc.
  - Sentry Water-Cable, Barrier (TL 3).
- Yodock Wall Co.
  - Model 2001 with 350 Rail Kit (TL 3).*
  - Model 2001M with 350 Rail Kit (TL 2).*

    *Steel reinforcement kits must be installed for product to qualify as a barrier.
- Valmont Highway
  - ArmorZone TL-2 Barrier and End Treatment (TL 2).

THIS PAGE
INTENTIONALLY
LEFT BLANK

Q. LONGUITUDINAL CHANNELIZING DEVICES

Longitudinal Channelizing devices shall comply with the requirements of the current *Barricade and Construction Standards* (BC Sheets) and the Current *Texas Manual on Uniform Traffic Control Devices* (TMUTCD).

Q.1. Longitudinal Channelizing Devices

(Not designed and should not be used to provide positive protection for obstacles, pedestrians or workers.)

- Off the Wall Products.
  - Multi-Barrier Model MB 42x45 LCB (TL 3).
  - Model MB42x72 JSS LCD (TL 3).
- Rochester Rotational Molding
  - 42 x 72 Longitudinal Channelizer (TL2).
- Safe-Hit, A Division of Energy Absorption System, Inc.
  - Barracuda Barricade system (TL 2).
- Plasticade Products
  - Strongwall LCD (TL 3).
- TrafFix Devices Inc.
  - Sentry Water-Cable Barrier (TL 3).
  - Water Wall (TL 2).
- Yodock Wall Co.
  - Model 2001 (TL 3).
  - Model 2001M (TL 3).
  - Model 2001SL (TL 2). Not approved for channelizing pedestrians.

THIS PAGE
INTENTIONALLY
LEFT BLANK

R. TEMPORARY RUMBLE STRIPS

Temporary Rumble Strips shall comply with the requirements of the current *Barricade and Construction Standards* (BC Sheets). Temporary Rumble Strips are not required on freeways and expressways but may be used based on engineering judgment.

Temporary Rumble Strips should not be used when the following conditions exist:

- Horizontal curves
- Loose gravel
- After seal coat has been applied
- Soft or bleeding asphalt
- Heavily rutted pavements
- Unpaved Surfaces

R.1. Temporary Rumble Strips

- Plastic Safety Systems, Inc.
  - Roadquake 2 (RQ2) Temporary Portable Rumble Strip
  - Roadquake 2 Folding (RQ2F) Temporary Rumble Strip.

THIS PAGE
INTENTIONALLY
LEFT BLANK

S. APPENDIX A.
PRODUCTS REMOVED FROM CWZTCD LIST

J.2.c. Wheeled Portable Sign Supports / Removed 3-08

M. Horizon SQ5 (Horizon Signal Technologies) / Removed 6-09

P. Off the Wall Products.

- Multi-barrier Model MB-350 with MB-350 kit I or Kit II attached (TL3).

THIS PAGE
INTENTIONALLY
LEFT BLANK

T. APPENDIX B. FABRICATION DETAILS

Reference in Section J.2.b

- Type 2 PCTB Sign Support Assembly

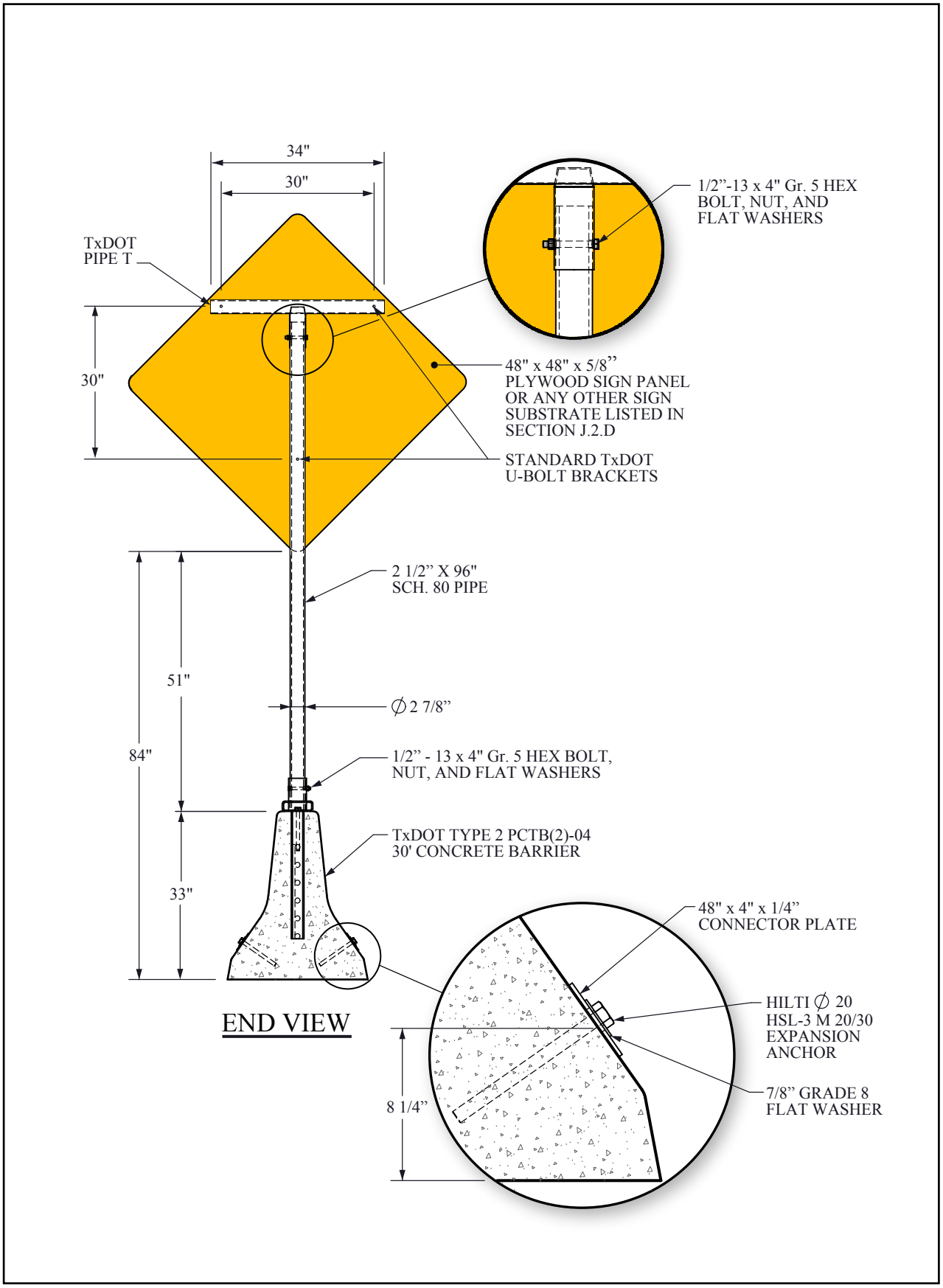

Type 2 PCTB Sign Support Assembly (1 of 4)

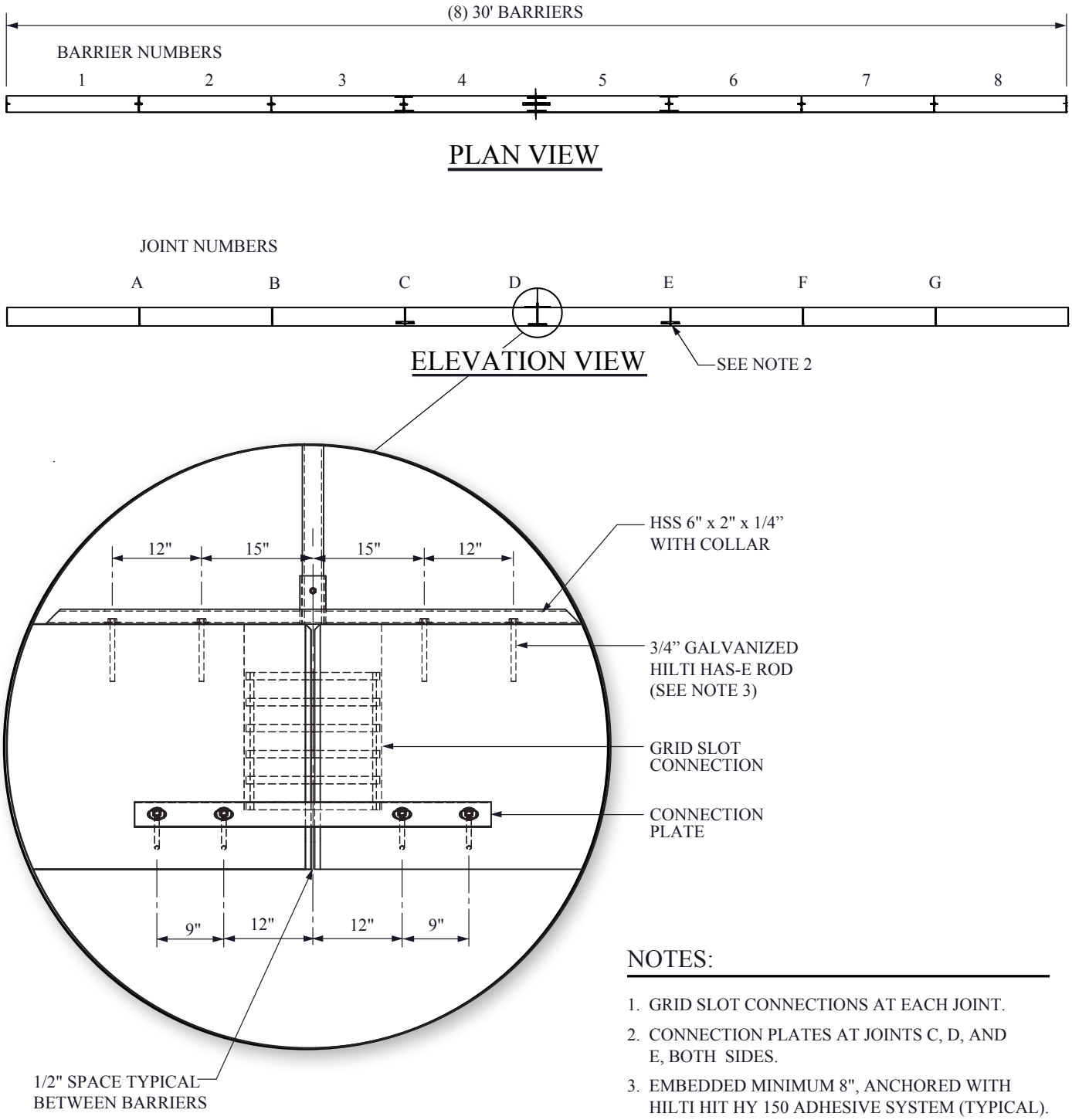

NOTES:

1. GRID SLOT CONNECTIONS AT EACH JOINT.
2. CONNECTION PLATES AT JOINTS C, D, AND E, BOTH SIDES.
3. EMBEDDED MINIMUM 8", ANCHORED WITH HILTI HIT HY 150 ADHESIVE SYSTEM (TYPICAL).

Type 2 PCTB Sign Support Assembly (2 of 4)

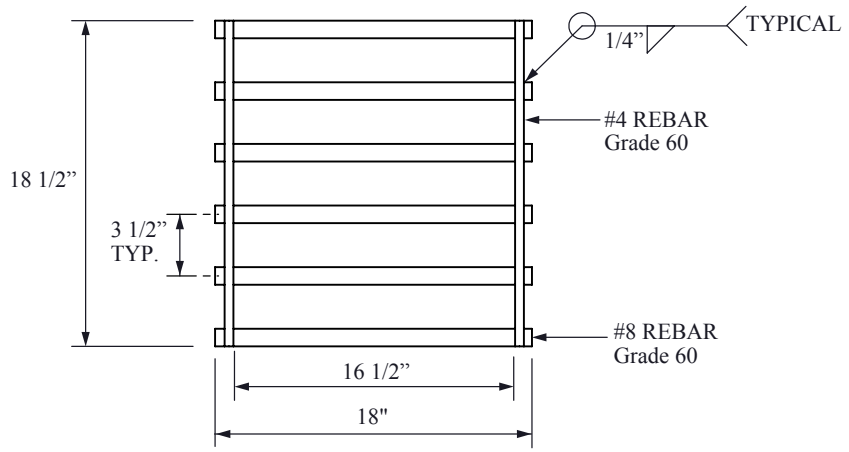

GRID SLOT CONNECTION

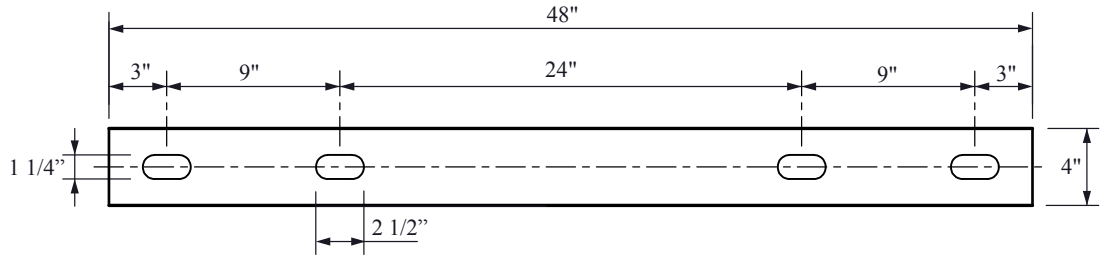

CONNECTION PLATE

SLOT DIMENSIONS TYPICAL
1/4" THICK - A36

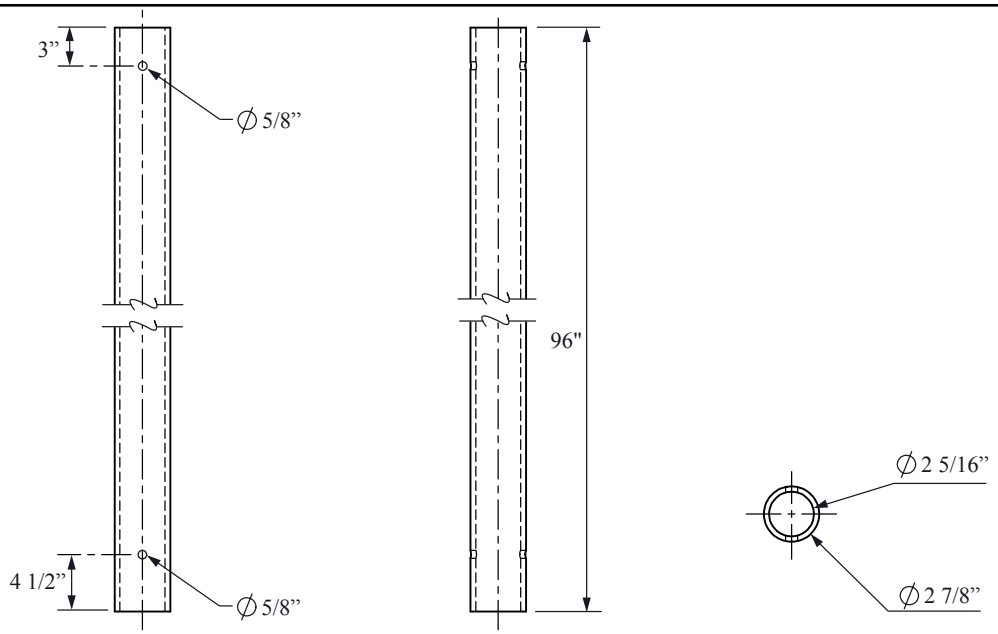

PIPE

2-1/2" Sch. 80

Type 2 PCTB Sign Support Assembly (3 of 4)

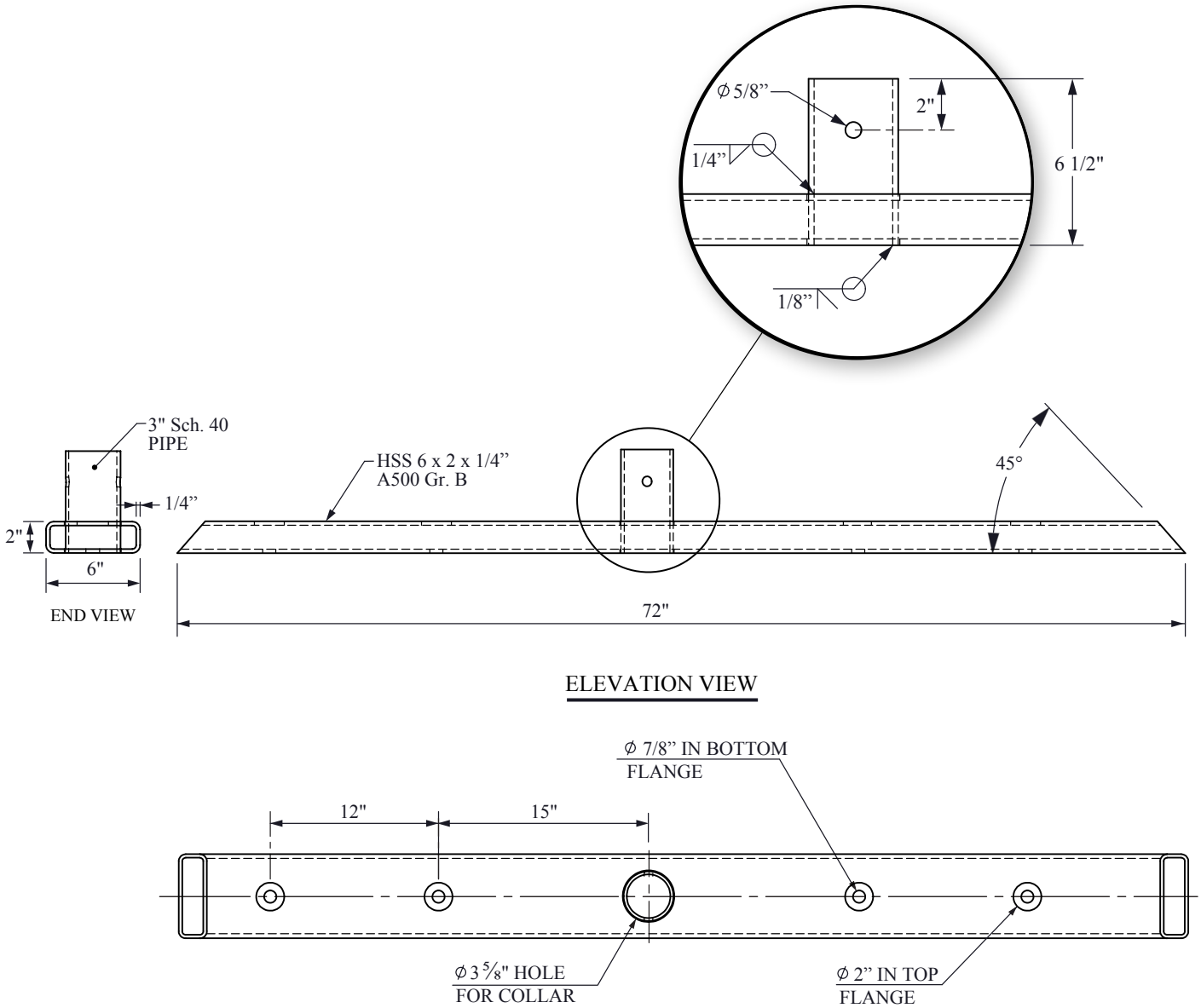

NOTES:

1. PART IS SYMMETRICAL ABOUT ℄'s
2. 7/8" AND 2" HOLES TYPICAL.

TUBING WITH COLLAR

Type 2 PCTB Sign Support Assembly (4 of 4)

THIS PAGE
INTENTIONALLY
LEFT BLANK

U. APPENDIX C. PRODUCT & INFORMATION SOURCES

AccuForm Signs
16228 Flight Path Dr., Brooksville, FL 34604
Phone: (866) 377-3119
Web: www.accuform.com

ADDCO Manufacturing Co.
240 Arlington, Ave. E, St. Paul, MN 55117
Phone: (651) 488-8600
Fax: (651) 558-3600
Web: www.addco.com

Aeolian Enterprises
One Lloyd Avenue Place, Suite 201, Latrobe, PA 15650
Phone: (412) 539-9460

Alcan Composites USA Inc.
P.O. Box507, Benton, KY 42025
Phone: (800) 626-33651/(270) 527-4200
Fax: (270) 527-1552
Web: www.alucobondusa.com

Allied Tube and Conduit Corporation
16100 South Lathrop, Harvey, IL 60426
Phone: (708) 339-1610

American Fiber Technologies
Division of US Highway Products Inc.
407 Brookside Road, Waterbury, CT 06708
Phone: (800) 883-8363
Fax: (203) 755-9158
Web: www.fiberbrite.com

Armorcast Products Co.
13230 Saticoy Street, North Hollywood, CA 91605
Phone: (818) 982-3600
Fax: (818) 982-7742
Web: www.armorcastprod.com

Barrier Systems Inc.
3333 Vaca Valley Pkwy, Ste. 800,Vacaville, CA 95688
Phone: (888) 800-3691/(707) 374-6800
Web: www.barriersystemsinc.com

Bent Mfg. Co. BDAA Inc.
15442 Chemical Ln, Huntington Beach, CA 92649
Phone: (888) 842-0600 / (714) 842-0600
Fax: (888) 842-BENT(2368), (714) 842-2959
Web: www.bentmfg.com
E-mail: bmc@bentmfg.com

Bone Safety Signs
1761 McCoba Drive, Suite A, Smyrna GA 30080
Phone: (800) 873-2399, (770) 333-1635
Fax: (770) 333-1639
Web: www.bonesafety.com

Bufftech
2525 Walden Ave., Buffalo, NY 14225
Phone: (800) 333-0569, (716) 685-1600
Fax: (716) 685-1172
Web: www.bufftech.com

Carsonite International
P.O. Box 98, Early Branch, SC 22916-0098
Phone: (800) 223-2083, (803) 943-9115
Fax: (803) 943-3375

CenterLine Supply, Inc.
530 Jesse Street, Grand Prairie, Texas 75051-1141
Phone: (800) 321-1751, (972) 647-8300
Fax: (972) 641-1221

Custom-Pak, Inc.
86 16th Avenue North
Clinton, IA 52732
Phone: (951) 219-6106
Fax: (563) 249-3163
Web: www.traffic-pak.com

Coroplast, Inc.
4501 Spring Valley Rd.,Dallas, TX 75244 3706 USA
Phone: (800) 806-6116, (972) 392-2241
Fax: (972) 392-2242
Web: www.coroplast.com

Cortina Safety Products
10706 Grand Avenue, Franklin Park, IL 60131
Phone: (847) 455-2800
Fax: (847) 451-7247
Web: www.cortinaco.com

Davidson Traffic Control Products
3110 70th Avenue East, Tacoma, WA 98424-3608
Phone: (425) 251-8140
Fax: (425) 251-8303

Dicke Tool Company
1201 Warren Avenue, Downers Grove, Illinois 60515
Phone: (630) 969-0050
Fax: (630) 969-3973
Web: www.dicketool.com
E-mail: wayne@dicketool.com

Dimensional Products, Inc.
P.O. Box 27177, Baltimore, MD 21230
Phone: (410) 646-0040
Fax: (410) 644-8594
E-mail: Dimenprod@erols.com

Eastern Metals/USA Sign
1430 Sullivan Street, Elmira, NY 14901
Phone: (607) 734-2295
Fax: (607) 734-8783

Eastern Molding International, LLC EMI
Highway Tech Safety Products
P.O. Box 311, Elizabeth St., Batavia, NY 14020
Phone: (585) 344-0220 / (800) 483-7875
Fax: (585) 344-2513

EcoStrate SFS, Inc.
1305 Rocky Canyon Rd.
Arlington, Tx 76012
Phone: (646) 715-6894
Email: hsherga@ecostrate.net
Web: *www.ecostrate.net*

Energy Absorption Systems, Inc.
35 East Wacker Drive Suite 1100, Chicago, IL 60601-2076
Phone: (888) 323-6374
Fax: (312) 467-1356, (800) 770-6755
Web: *www.energyabsorption.com*

Fender Enterprises, Inc.
1332 Azalea Lane, New Braunfels, TX 78130
Phone: (830) 606-5723
Jim Kirksey
121 Idlewild Court, Highland Village, TX 75067
Phone: (972) 317-4148, Pager: (800) 678-2291
Fax: (972) 317-0523

Flasher Flare South East, Inc.
P.O. Box 15395, Tampa, FL 33684-5395
Phone: (800) 367-2389, (813) 876-6463
Fax: (813) 871-2783
E-mail: kluzinski@ffse.tscs.com

Franklin Industries
P.O. Box 671, Franklin, PA 16323
Phone: (814) 437-3726
Phone: (606) 263-3628
Fax: (606) 263-3823

Gregory Industries, Inc.
4100 13th Street, SW, Canton, OH 44710
Phone: (330) 477-4800
Fax: (330) 477-0626
Web: *www.gregorycorp.com*

Highway Care
7068 Fire Opal Dr., Las Vegas, NV 89131
Phone: (702) 204-0732
Web: *www.highwaycareusa.com*

Hill & Smith, Inc.
1000 Buckeye Park Rd., Columbus, OH 43207
Phone: (614) 340-6294
Fax: (614) 340-6296
Web: *www.hillandsmith.com*

Horizon Signal Technologies
202 Conestoga Road, Wayne, PA 19087
Phone: (800) 852 8796

Hwy Com, Inc.
P.O. Box 3010, Big Spring, TX 79721-3010
Phone: (800) 449-9109

IRS® - Impact Recovery Systems, Inc.
P.O. Box 12637, San Antonio, TX 78212
Phone: (210) 736-4477
Fax: (210) 736-2084

Inteplast Group Ltd.
Headquarters
9 Peach Tree Hill Road, Livingston, NJ 07039
Phone: (800) 452-2117
Fax: (800) 889-8807
Plant: 101 Inteplast Blvd., Lolita, Texas 77971
Phone: (512) 874-3754
Fax: (512) 874-3984
Web: *www.inteplast.com*

International Plastics Corporation
111 Patton Court, Nicholasville, KY 40356
Phone: (606) 887-2877

International Traffic Systems - Texas, Inc.
P.O. Box 761, Hondo, TX 78661
Phone: (830) 741-2205
Fax: (830) 426-5244

Itasca Plastics
3750 Ohio Avenue, St. Charles, IL 60174-5438
Phone: (800) 961-9101./ (630) 443-4446
Fax: (630) 443-8930

Korman Signs, Inc.
3027 Lincoln Ave., Richmond, VA 23228
Phone: (800) 296-6050 / (804) 262-6050
Web: *www.kormansigns.com*
E-mail: korman@kormansigns.com

L. B. Gambrell Manufacturers Agency, Inc.
17774 Cypress Rosehill, Cypress, TX 77429
Phone: (281) 357-1511
Fax: (281) 357-1505

Lakeside Plastics, Inc.
P.O. Box 2384, Oshkosh, WI 54903
Phone: (920) 235-4513
Fax: (920) 235-6545

Lancaster Composite
P.O. Box 247, Columbia, PA 17512-0247
Phone: (717) 684-4440
Fax: (717) 684-4445

Lang Products International, Inc.
1440 7th Ave., Newport, MN 55055
Phone: (281) 357-1511
Fax: (281) 357-1505

Marion Steel
912 Cheney Ave., Marion, OH 43301-18011
Phone: (800) 333-4011, (614) 383-4011
Fax: (614) 383-6429

MDI - Marketing Displays International
38271 W. Twelve Mile Road, Farmington Hills, MI 48331-3041
Phone: (800) 521-6776, (248) 553-1900
Fax: (248) 488-5700
Web: *www.mdiworldwide.com*
E-mail: tcpsales@mdiworldwide.com

MSi - Material Sales International
3102 S. Roosevelt Street, Tempe, AZ 85282-2008
Phone: (800) 426-7155, (602) 894-0365
Fax: (602) 967-6704

Maxistrut, Inc.
P.O. Box 70067, Houston, TX 77270-0067
Phone: (713) 880-4228
Fax: (713) 868-4550

Melba Products, Inc.
584 Francestown Road, Bennington, NH 03442
Phone: (603) 588-4034
Fax: (603) 588-8027

Metro Plastic Barricades
4417 Winding Creek Ct., Arlington, TX 76016
Phone: (817) 563-0008

Mobile Barriers, LLC
24918 Genesse Trail Rd., Golden, CO 80401
Phone: (303) 526-59-9959
E-mail: info@mobilebarriers.com

North America Traffic, Inc.
7 Petersburg Circle, Port Colborne, Ontario, Canada L3K5V4
Phone: (877) 352-4626
Web: *www.northamericatraffic.com*

Northwest Pipe Company
P.O. Box 2002, Houston, TX 77252-2002
Phone: (800) 369-5009, (713)863-4300
Fax: (713) 863-4350

Off the Wall Products
P.O. Box 1461, Salt Lake City, UT 84110
Phone: (801) 363-7740 / (888) 363-7740
Fax: (801) 363-6372
Web: *www.multi-barrier.com*

OMJC Signal, Inc.
P.O. Box 1594, Waterloo, IA 50704-1594
Phone: (800) 776-5999 / (319) 236-0200
Fax: (319) 236-1554
Web: *www.omjcsignal.com*

P & H Tube Corporation
P.O. Box 2002, Houston, TX 77252
Phone: (713) 863-4300
Fax: (713) 863-4313

PBS, Inc.
c/o Price Traffic Products
3810 Harvey Rd., College Station, TX 77845
Phone: (800) 392-1979, (979) 774-9191
Fax: (979) 774-9193
E-mail: sales@pricetrafficproducts.com

Plasticade Products
7700 Austin Ave., Skokie, Illinois 60077
Phone: (800) 772-0355, (847) 470-0400
Fax: (847) 470-0420

Plastic Safety Systems, Inc.
P.O. Box 20140, Cleveland, OH 44120
Phone: (800) 662-6338, (216) 231-8590
Fax: (216) 231-2702

Radiator Specialty Company
P. O. Box 34689, Charlotte, NC 28234-6080
Richard W. Brown, National Sales and Marketing Manager
1900 Wilkinson Boulevard, Charlotte, NC 28208
Phone: (800) 438-4532, (704) 377-6555
Fax: (800) 421-9525

Rad-Tec Fabricators, Inc.
4810 Rincon Rd., Corpus Christi, TX 78402
Phone: (361) 883-0831
Fax: (361) 883-0867
E-mail: www.radtecrubberall.com

Recycled Plastic Products, Inc.
1630 W. Evans Unit L, Englewood, CO 80110
Phone: (800) 235-7940, (303) 975-0033
Fax: (303) 975-0050
E-mail: www.plastifnce@aol.com

Reflexite Corporation
120 Darling Drive, Avon, CT 06001-4217
Phone: (860) 676-7100
Fax: (860) 676-7199
Web: *www.reflexite.com*

Renco, Inc.
P.O. Box 730, Pflugerville, TX 78691-0730
Phone: (800) 654-8182, (512) 251-2421
Fax: (512) 251-5411

Reynolds Metal Company
P.O. Box 429, Eastman, GA 31023
Phone: (800) 841-7774

Rochester Rotational Molding, Inc.
P.O. Box 205, Rochester, IN 46975
Phone: (574) 223-0557
Fax: (574) 223-8303
Web: *www.rrmplastics.com*

S-Square Tube Products
P.O. Box 306, Commerce City, CO 80037
Phone: (303) 286-7051, (888) 267-6463
Fax: (866) 639-5717
Web: *www.s-squaretube.com*

Safe-Hit, A Division of Energy Absorption Systems, Inc.
35 East Wacker Drive, Suite 1100, Chicago, IL, 60601
Phone: (800) 537-8958
Fax: (800) 770-6755

Safety Barriers, Inc.
10519 Lexington Dr, Knoxville, TN 37933
Phone: (865) 966-1923, (800) 966-2012
Fax: (865) 675-3622
Web: *www.safetybarriersinc.com*

Sequentia Incorporated
P.O. Box 360530, Cleveland, OH 44136
Phone: (216) 238-2400
Fax: (216) 238-0820

Service & Materials Co. (Flex-O-Lite)
801 Corporate Center Drive, Suite 300, St. Charles, MO 63304
Phone: (636) 300-2700
Fax: (636) 300-2820
Sales & Customer Service
125 Cassens Court, St. Louis, MO 63026
Phone: (800) 428-8185
Fax: (800) 634-9517
Web: *www.servmat.com*

Service Signing, L.C.
P.O. Box 158, Cedar Falls, Iowa 50613
Phone: (319) 235-9356
Fax: (319) 235-0960

Stripes & Stops Co., Inc.
2323 Greens Rd., Houston, TX 77032
Phone: (281) 821-3307
Fax: (281) 821-5680
Web: *www.stripesandstops.com*

TAPCO - Traffic & Parking Control Co., Inc.
120 North 120th Street, Wauwatosa, WI 53226
Phone: (800) 236-0112, (414) 258-1115
Fax: (414) 258-2087
Web: *www.tapconet.com*
E-mail: tapco@tapconet.com

TxDOT
Texas Department of Transportation
Attn: Standards Engineer, TRF - TE
125 E. 11th Street, Austin, TX 78701-2483
Phone: (512) 416-3118
Fax: (512) 416-3299
Web: *www.txdot.gov*

Three D Traffic Works, Inc.
430 North Varney Street, Burbank, CA 91502
Phone: (877) THE-WRKS, (818) 841-2182
Fax: (818) 841-5096
Web: *www.3dplastics.com/tw*

Traffic Control Systems
P.O. Box 1111, Beeville, TX 78104
Phone: (361) 362-2221
Fax: (361) 362-2223

Transportation Research Board
Transportation Research Board, National Research Council
2101 Constitution Avenue, N. W., Washington, D. C. 20418
Web: *www.nas.edu/trb*

Traffic Control Products Group
2320 N. Central Exwy., Dallas, TX 75204
Phone: (214) 887-0979
Fax: (214) 887-0902

TrafFix Devices, Inc.
220 Calle Pintoresco, San Clemente, CA 92672
Phone: (949) 361-5663
Fax: (949) 361-9205
Web: *www.traffixdevices.com*
Scott Ryan, S.W. Regional Sales Manager
2009 Liverpool Drive, Plano, TX 75025-3346
Phone: (972) 517-4516
Fax: (972) 517-5138

Trinity Highway Products, LLC
2525 Stemmons Freeway, Dallas, Texas 75207
Phone: (800) 527-6050, ext. 88836 (214) 589-8423
Web: *www.highwayguardrail.com*
www.energyabsorption.com

Trus Joist MacMillan
2600 East Amity Road, Boise, ID 83716
Phone: (800) 441-4852
(208) 365-3600

Ultimate Highway Sales, Inc.
P.O. Box 548., Chicago Heights, IL 60412-0548
Phone: (800) 730-4939, (708) 753-0335
Fax: (708) 753-0336

Unistrut Corporation
35660 Clinton Street, Wayne, MI 48184
Phone: (800) 521-7730
Telespar Product Manager
4929 Blalock, Houston, TX 77041
Phone: (800) 242-1912, (713) 690-1652
Fax: (713) 690-2335
Web: *www.unistrut.com*
E-mail: unistrut@interaccess.com

Universal Anchor Systems, L.L.C.
P.O.Box 3010, Big Spring, TX 79721-3010
Phone: (800) 449-9109

Utility Structural Systems
11515 Counselor, Houston, TX 77065
Phone: (800) 367-9273, (713) 991-1145
Fax: (281) 890-6913

Valmont Highway
57-65 Airds Road, Minto, NSW, 2566, Australia
Phone: +61 2 98273353
Fax: +61 2 98273300
Web: www.valmonthighway.com

Verdegro USA LLC
888 Biscayne Blvd, Suite 505, Miami, FL 33132
Phone: (786) 408-5709
Fax: (786) 431-3097
Web: www.sales@verdegro.com

Ver-Mac Signal Technologies, Inc.
1781 Rue Bresse, Quebec, QC G2G 2V2, Canada
Phone: (888) 488-7446, (418) 654-1303
Fax: (418) 654-0517
Web; *www.ver-mac.com*

Western Highway Products, Inc.
10650 Fern Ave., Stanton, CA 90680
Phone: (714) 761-4811
Fax: (714) 952-2118
Web: *www.westernhighway.com*
E-mail: whpsales@westernhighway.com

WLI Industries, Inc.
P.O. Box 7050, Villa Park, IL 60181-7050
Phone: (800) 323-2462
Web: *www.wli-industries.com*
E-mail: sales@wli-industries.com

Work Area Protection Corporation
2500 Production Dr. - P.O. Box 4087, St. Charles, IL 60174-9081
Phone: (800) 327-4417, (630) 377-9100
Fax: (630) 377-9270
E-mail: workarea@workareaprotection.com

Work Zone Safety Products, Inc.
7201 Haven Ave., Suite E, Rancho Cucamonga, CA 91701
Phone: (909) 266-1453
Web: *www.workzonesafetyproducts.com*

Yodock Wall Company
153 West Main St., Bloomberg, PA 17815
Phone: (800) 496-3625, (570) 380-2856
Web: *www.waterbarrier.com*
E-mail: info@waterbarrier.com

THIS PAGE
INTENTIONALLY
LEFT BLANK